MAIN SECTIONS	**SECTIONS PRINCIPALES**	**SECCIONES PRINCIPALES**	**HOVEDAFSNIT**
SEZIONI PRINCIPALI	**HAUPTABSCHNITTE**	**SECÇÕES PRINCIPAIS**	**HOOFDSECTIES**

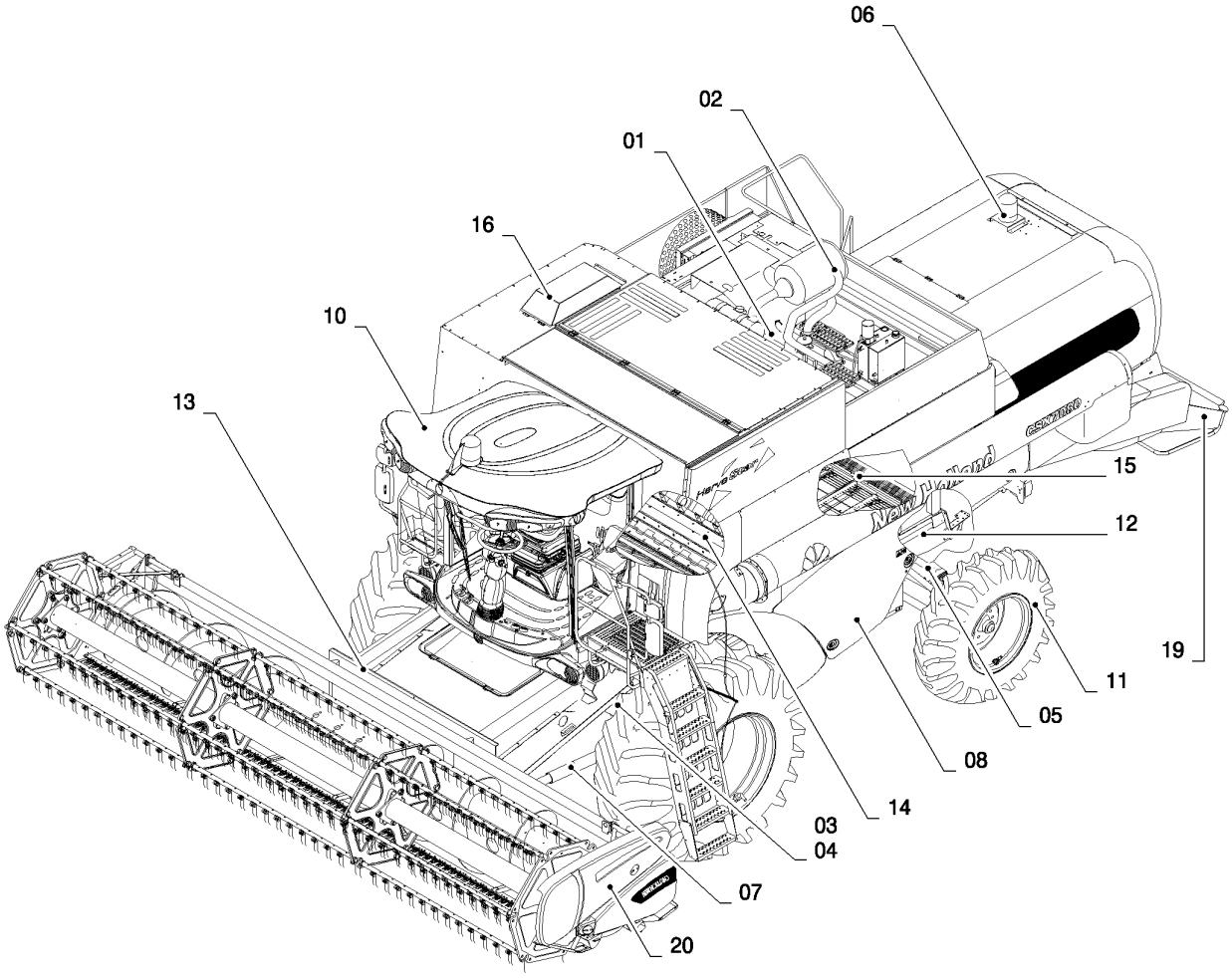

ссылка	Номер детали	Кол-во	Описание

IDENTIFICATION PLATES
TARGHETTE DI IDENTIFICAZIONE
PLAQUES D'IDENTIFICATION
TYPENSCHILDER

PLACAS DE IDENTIFICACIÓN
CHAPAS DE IDENTIFICAÇÃO
IDENTIFIKATIONSPLADER
IDENTIFICATIEPLATEN

VEHICLE IDENTIFICATION
IDENTIFICAZIONE MODELLO
IDENTIFICATION MODELE
KENNZEICHEN MODELLS
IDENTIFICACION MODELO
IDENTIFICAÇÃO DO MODELO
MODELKENDINGSPLADE
MODELIDENTIFICATIE

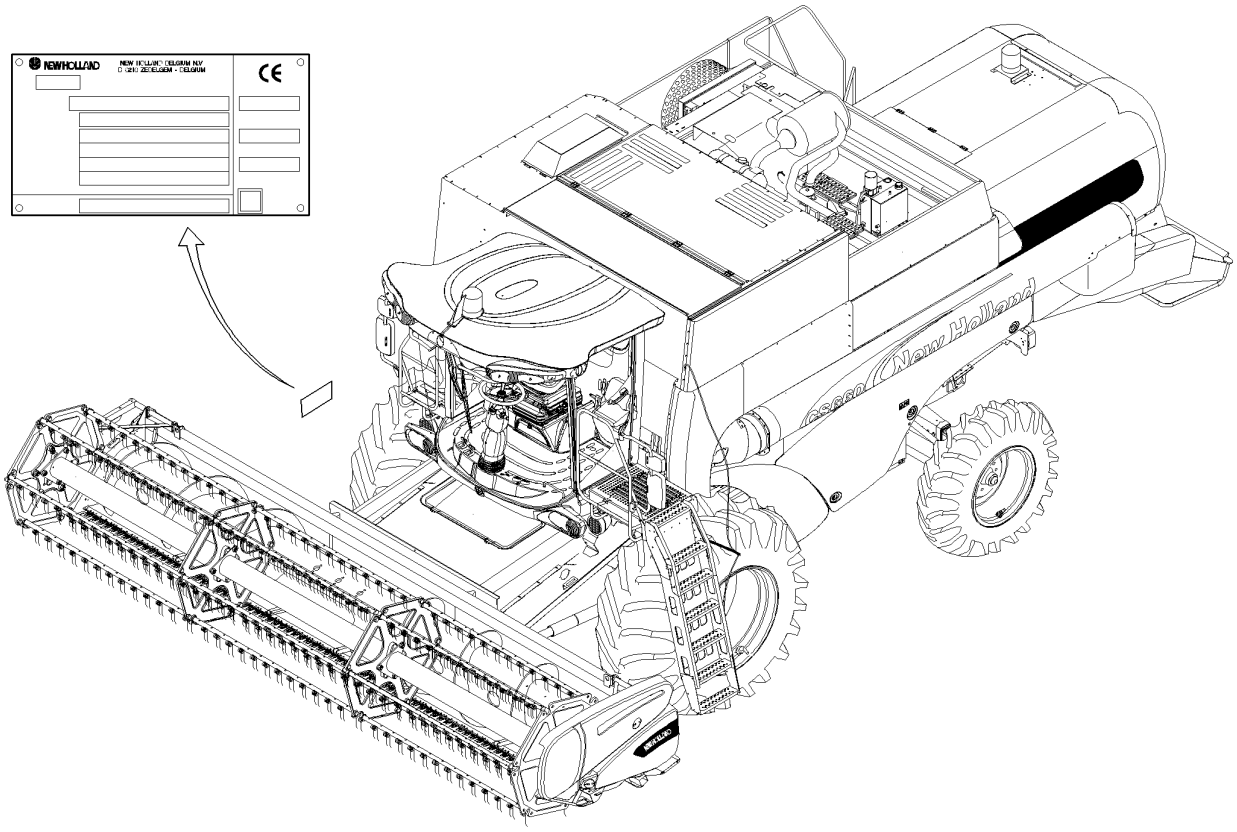

0.0038(01) IDENTIFICATION PLATES

ссылка	Номер детали	Кол-во	Описание

MAINTENANCE PARTS
PARTICOLARI PER LA MANUTENZIONE
PIECES DE MAINTENANCE
TEILE FÜR DIE INSTANDHALTUNG

PIEZAS DE MANTENIMIENTO
PEÇAS DE MANUTENÇÃO
VEDLIGEHOLDELSESDELE
ONDERDELEN VOOR ONDERHOUD

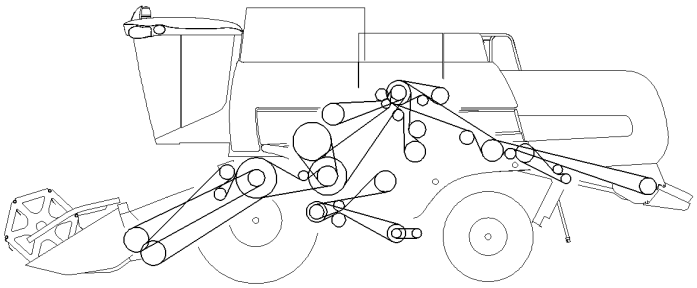

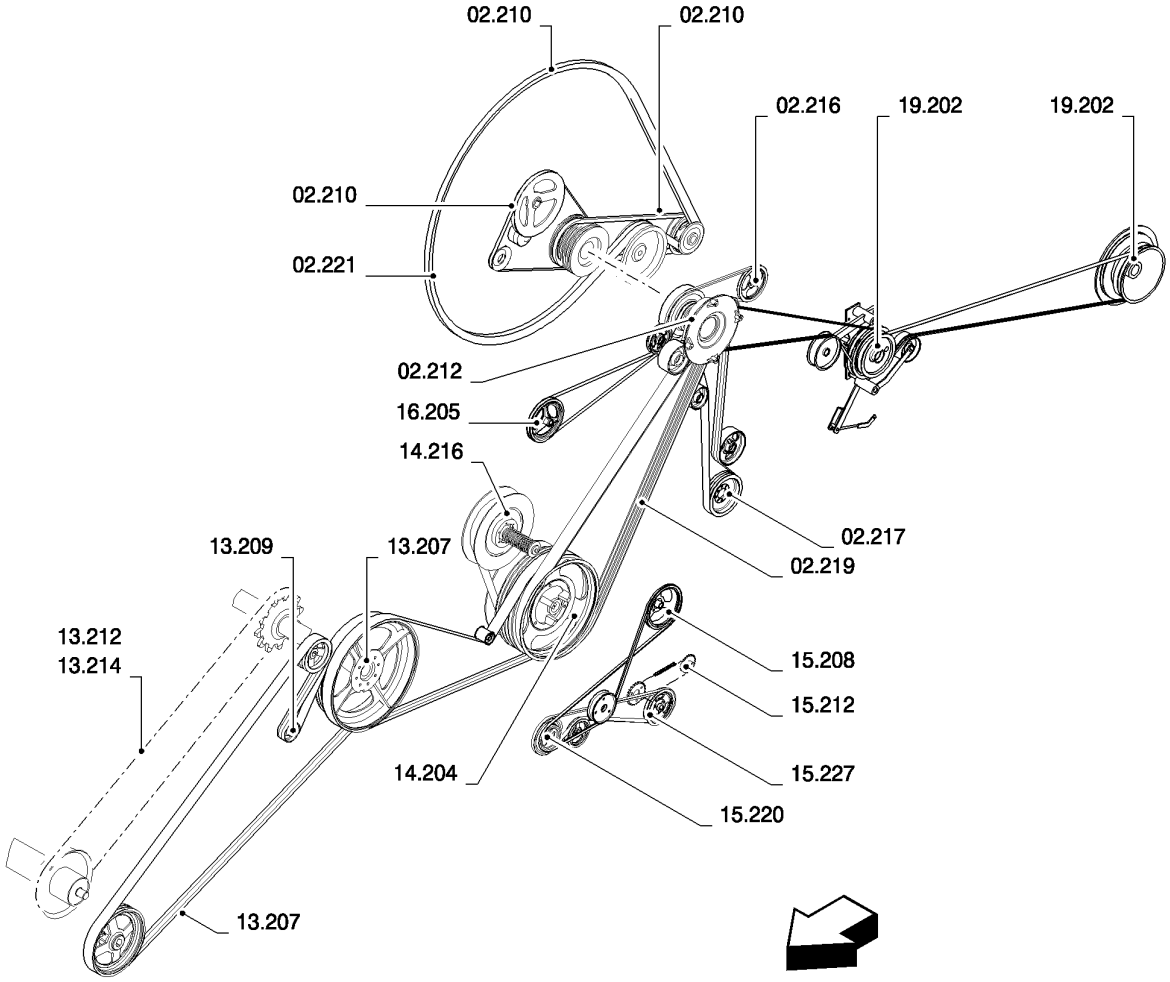

ссылка	Номер детали	Кол-во	Описание

MAINTENANCE PARTS
PARTICOLARI PER LA MANUTENZIONE
PIECES DE MAINTENANCE
TEILE FÜR DIE INSTANDHALTUNG

PIEZAS DE MANTENIMIENTO
PEÇAS DE MANUTENÇÃO
VEDLIGEHOLDELSESDELE
ONDERDELEN VOOR ONDERHOUD

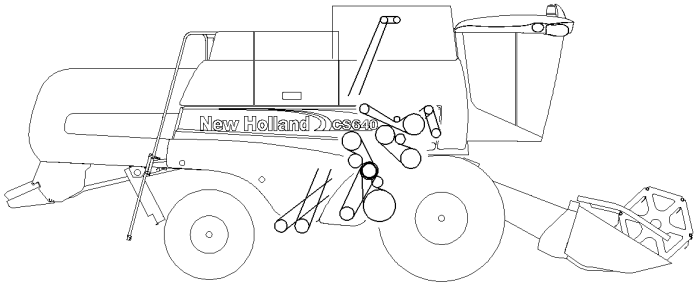

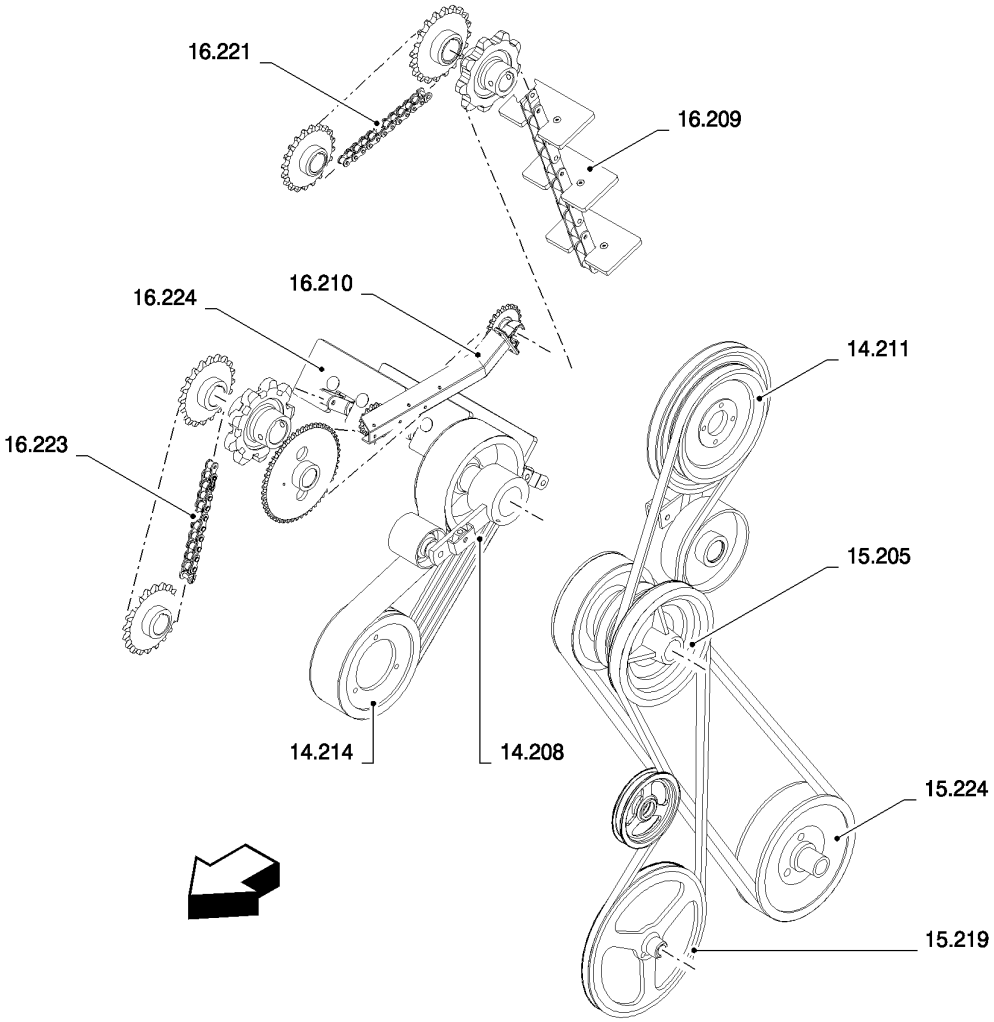

ссылка	Номер детали	Кол-во	Описание

0.0039B(01) SERVICE MAINTENANCE KIT

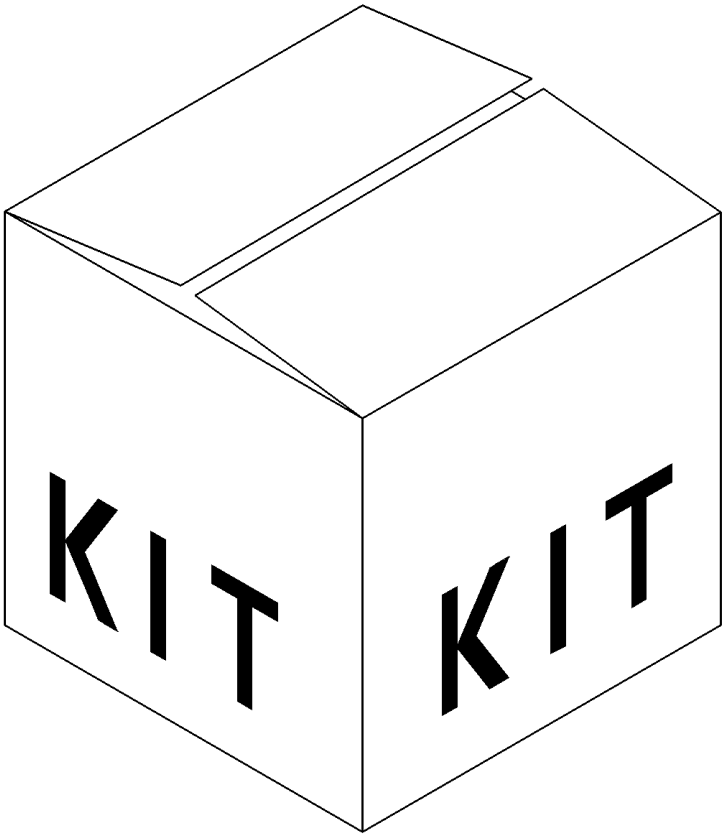

CSX7080 C659 - COMBINE (9/06-8/08)

0.0039B(01) SERVICE MAINTENANCE KIT

ссылка	Номер детали	Кол-во	Описание
1	73318009	1	, 300 hrs, BSN C659
2	73318010	1	, 600 hrs, BSN C659
2	73318897	1	, 600 hrs, ASN D660
3	73318011	1	, 1000 hrs, BSN C659
4	73318898	1	, 1200 hrs, ASN D660

ENGINE	**MOTEUR**	**MOTOR**	**MOTOR**
MOTORE	**MOTOR**	**MOTOR**	**MOTOR**

SEC. 1

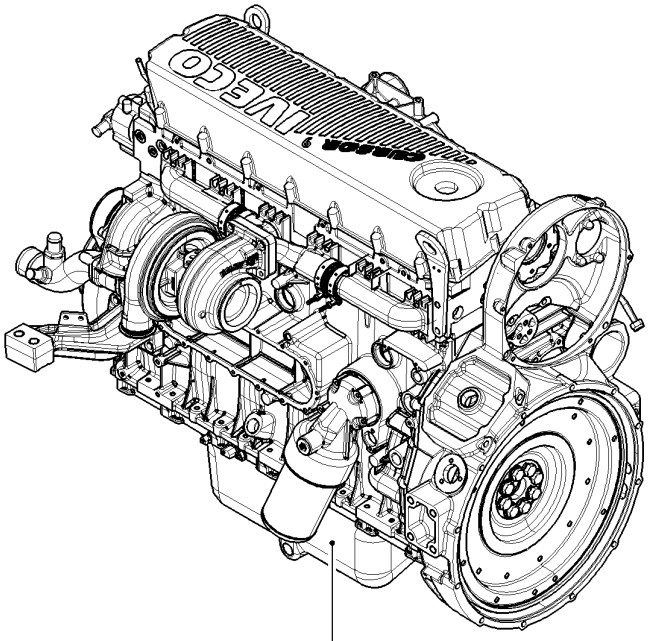

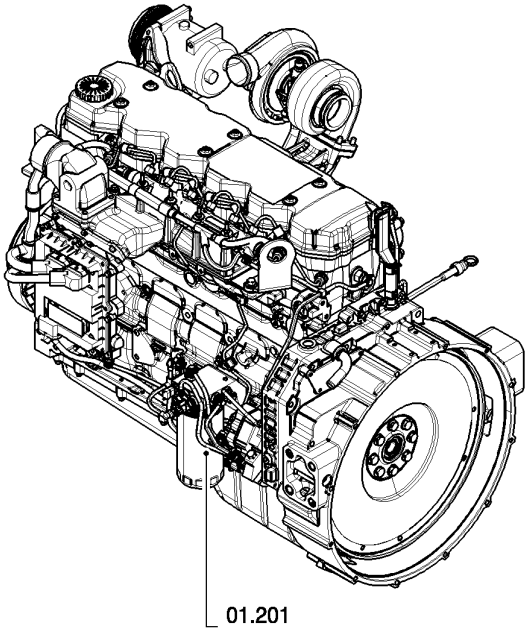

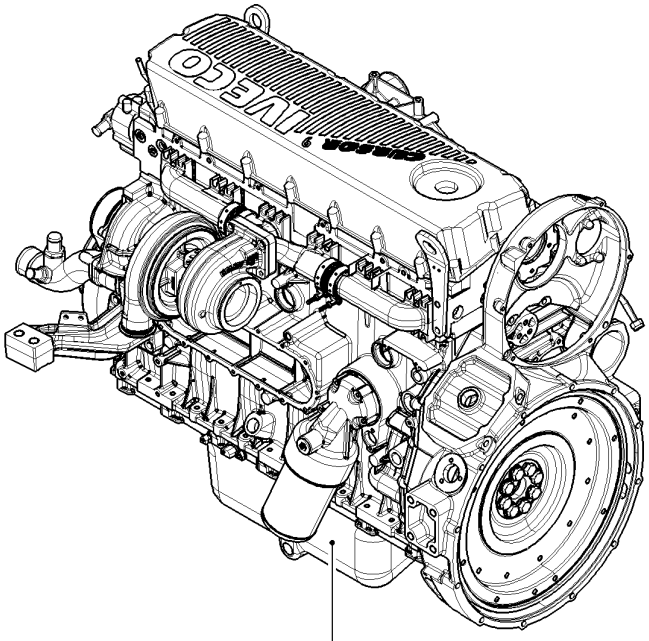

ссылка	Номер детали	Кол-во	Описание

01.201(B 01) COMPLETE ENGINE

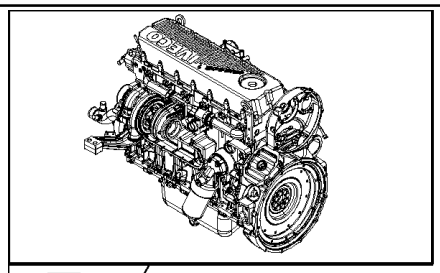

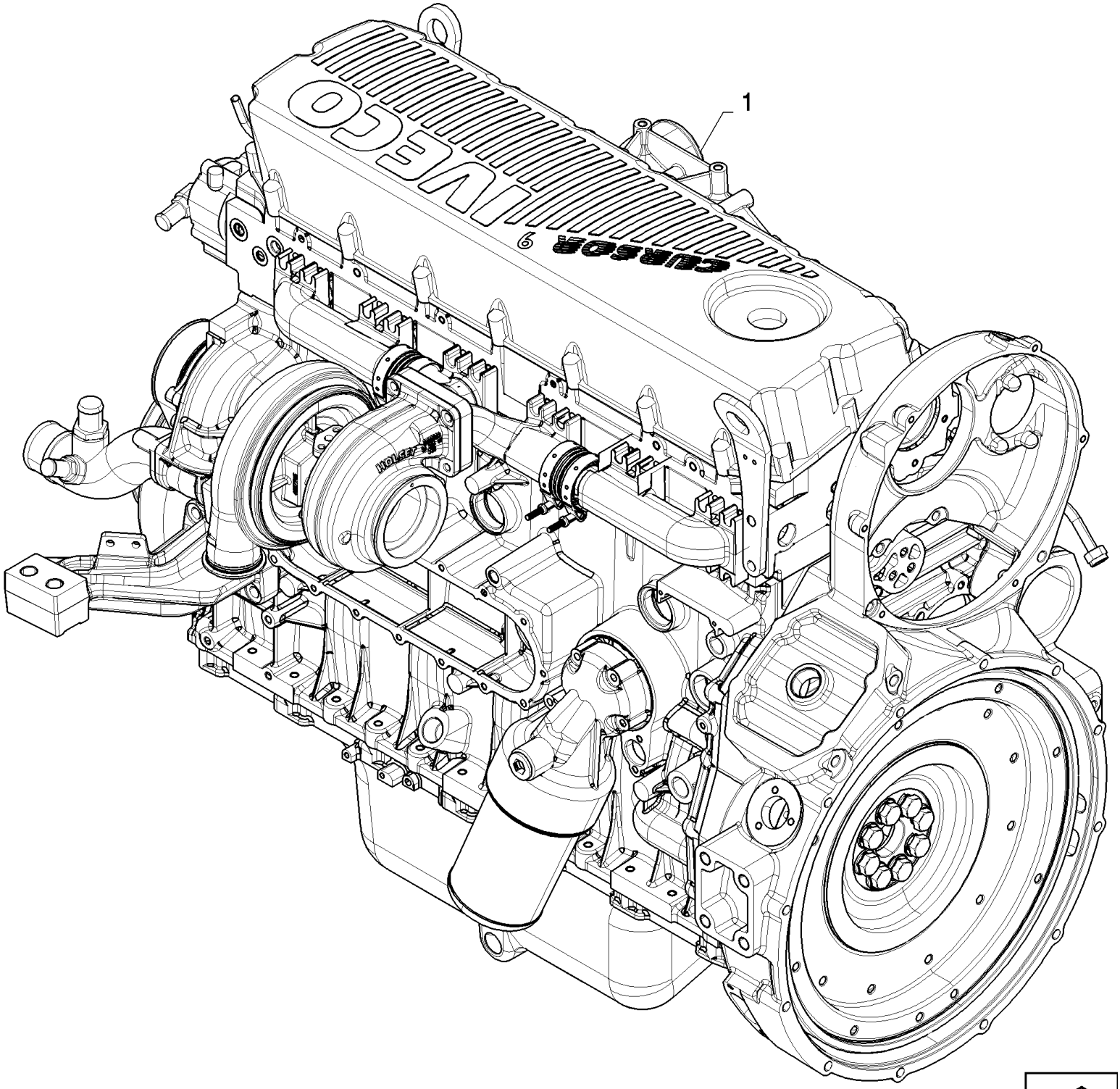

CSX7080 C659 - COMBINE (9/06-8/08)

01.201(B 01) COMPLETE ENGINE

ссылка	Номер детали	Кол-во	Описание
1	84455196	1	ENGINE, , SEE ENGINE F2CE9684C*E002

ENGINE EQUIPMENT	**EQUIPEMENT MOTEUR**	**EQUIPO MOTOR**	**MOTORUDSTYR**
EQUIPAGGIAMENTO MOTORE	**MOTORAUSRÜSTUNG**	**EQUIPAMENTO DO MOTOR**	**MOTORUITRUSTING**

SEC. 2

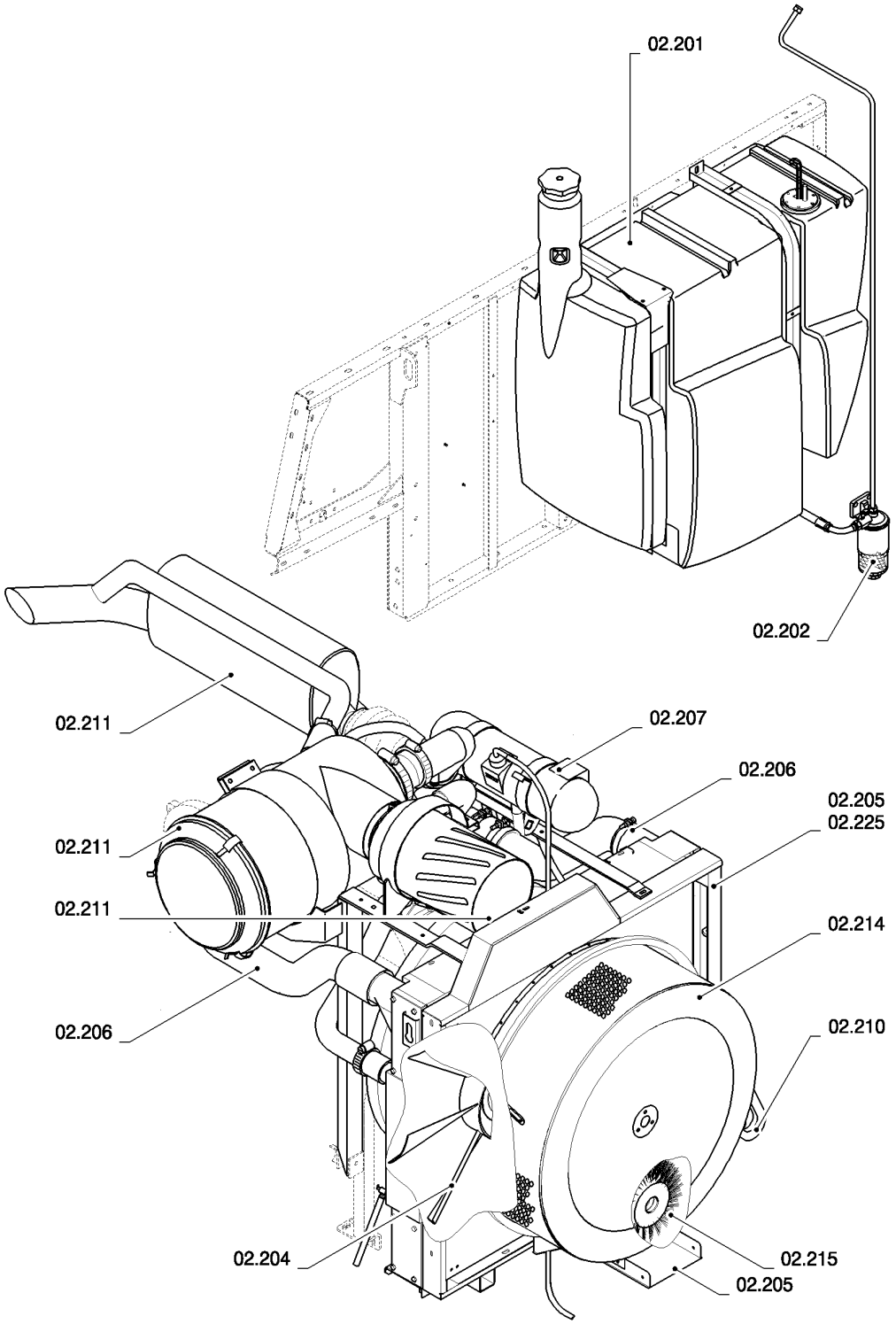

ссылка	Номер детали	Кол-во	Описание

ENGINE EQUIPMENT **EQUIPEMENT MOTEUR** **EQUIPO MOTOR** **MOTORUDSTYR**

EQUIPAGGIAMENTO MOTORE **MOTORAUSRÜSTUNG** **EQUIPAMENTO DO MOTOR** **MOTORUITRUSTING**

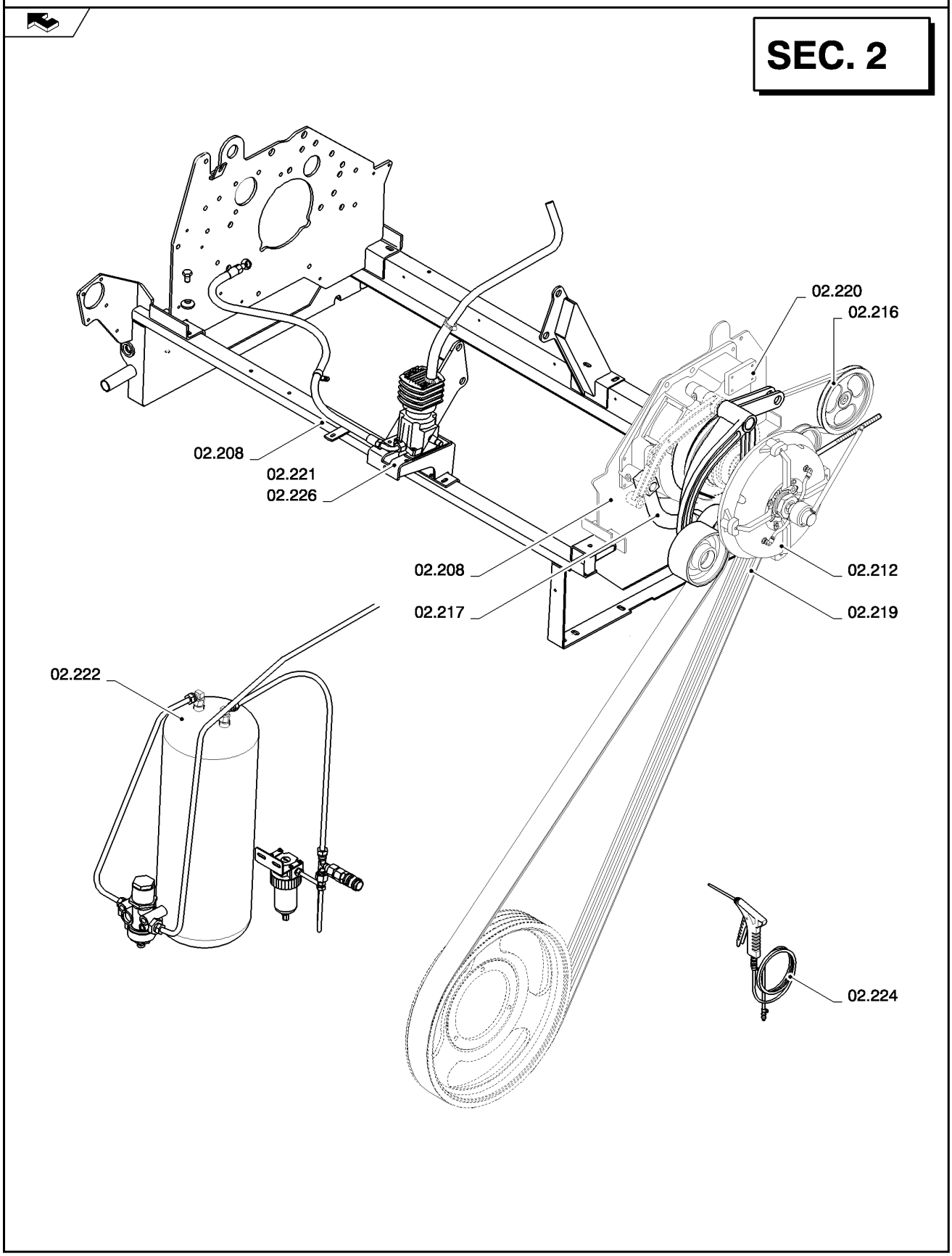

ссылка	Номер детали	Кол-во	Описание

02.201(A 01) FUEL TANK, SUPPORTS

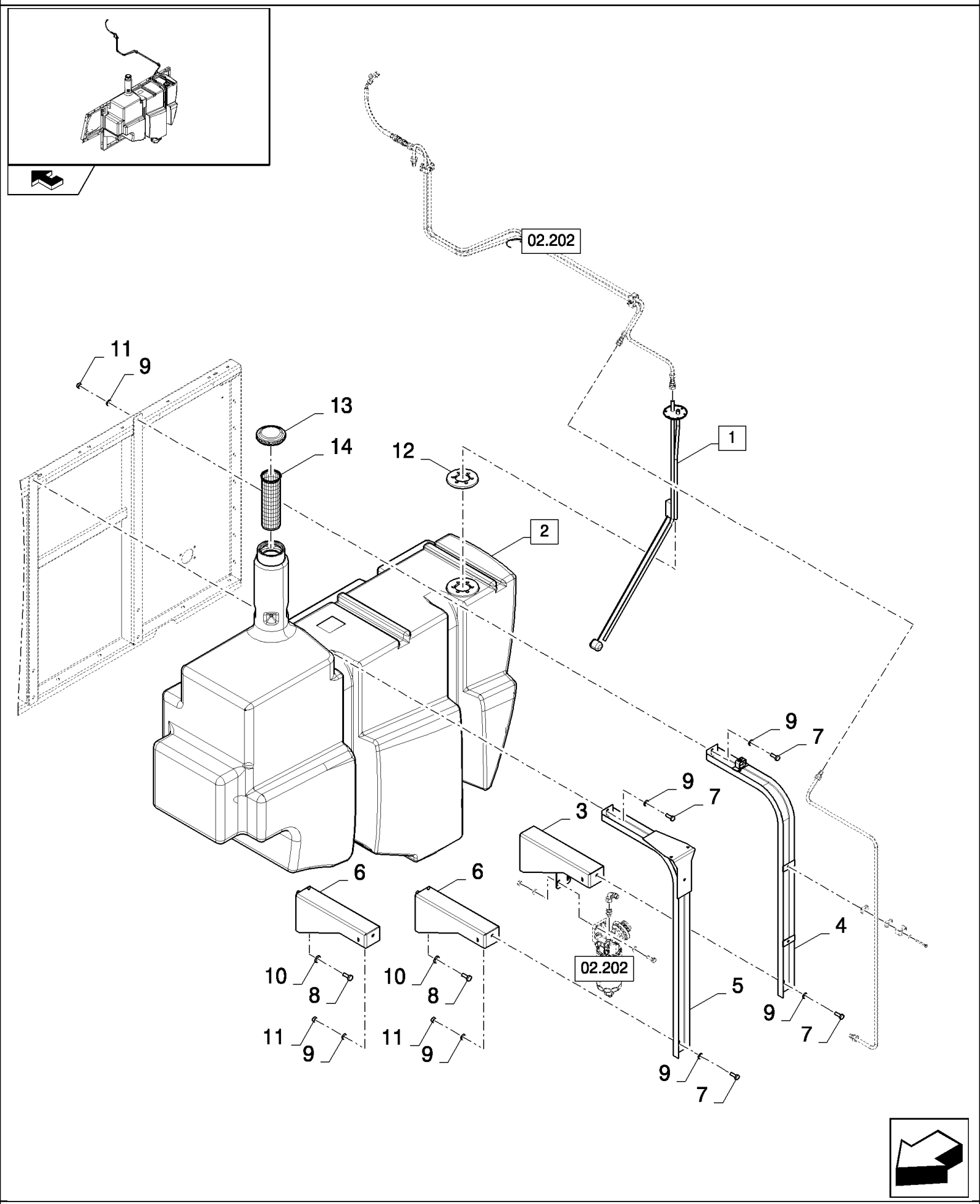

CSX7080 C659 - COMBINE (9/06-8/08)

02.201(A 01) FUEL TANK, SUPPORTS

ссылка	Номер детали	Кол-во	Описание
1	84073619	1	INDICATOR, (12)
2	84814091	1	FUEL TANK, (13,14)
3	87339917	1	SUPPORT,
4	87340644	1	SUPPORT,
5	84433740	1	SUPPORT,
6	87340418	2	SUPPORT,
7	43140	4	BOLT, Hex, M10 x 30, 8.8, Full Thd,
8	9706687	6	SCREW, Hex, M12 x 30, 8.8,
9	140045	8	WASHER, SPRING, Belleville, M10,
10	140046	6	WASHER, Belleville, M12,
11	100016	4	NUT, M10, Cl 8,
12	9832364	1	SEAL,
13	9502050	1	FILTER, STRAINER,
14	84041999	1	CAP,

02.202(B 01) FUEL TANK, PIPE LINES

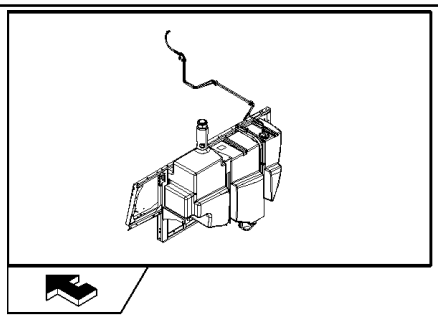

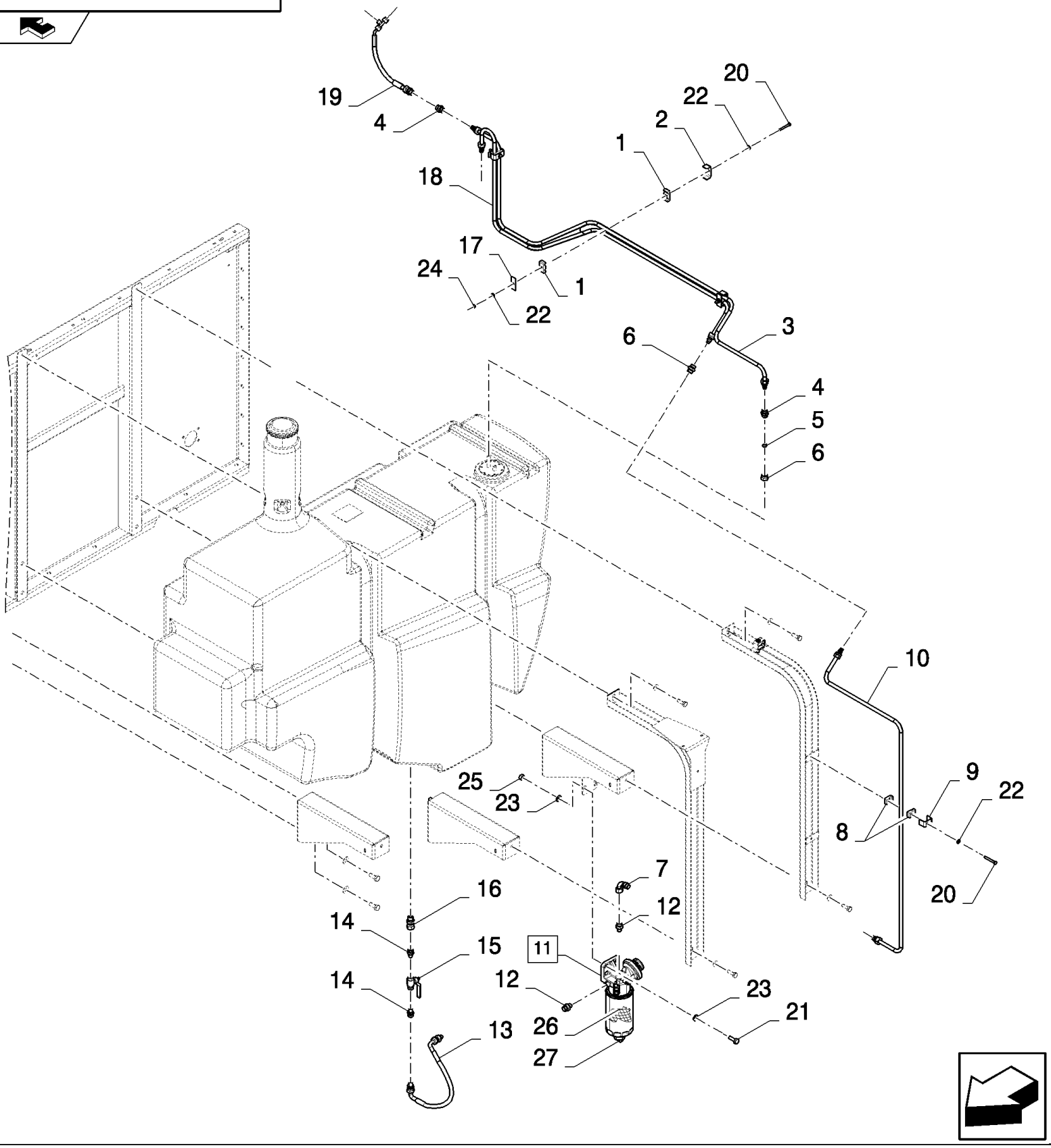

CSX7080 C659 - COMBINE (9/06-8/08)

02.202(B 01) FUEL TANK, PIPE LINES

ссылка	Номер детали	Кол-во	Описание
1	430357	6	CLAMP,
2	431941	3	SUPPORT,
3	87360038	1	TUBE,
4	150018	3	CONNECTOR, HYD.,
5	150015	1	FERRULE,
6	86548976	1	NUT,
7	9508529	1	ELBOW,
8	433008	4	CLAMP,
9	442340	2	SUPPORT,
10	84462780	1	TUBE, HYD,
11	87533314	1	FILTER, FUEL, (26, 27)
12	84431916	2	FITTING,
13	84069559	1	HOSE, FLEXIBLE,
14	84069089	2	CONNECTOR, HYD.,
15	84011517	1	DRAINCOCK/TAP, SUPPLY,
16	84989397	1	CONNECTOR, HYD.,
17	434097	3	BRACKET,
18	87360028	1	TUBE,
19	87525988	1	HOSE, FLEXIBLE,
20	120056	5	SCREW, Hex, M6 x 50, 8.8,
21	43140	2	BOLT, Hex, M10 x 30, 8.8, Full Thd,
22	322357	8	WASHER, SPRING, Belleville, M6,
23	140045	4	WASHER, SPRING, Belleville, M10,
24	353308	3	NUT, M6 x 1, Cl 8,
25	100016	2	NUT, M10, Cl 8,
26	87533313	1	FILTER, ELEMENT,
27	87519307	1	SENSOR,

02.204(A 01) ROTARY SCREEN : SHAFTS

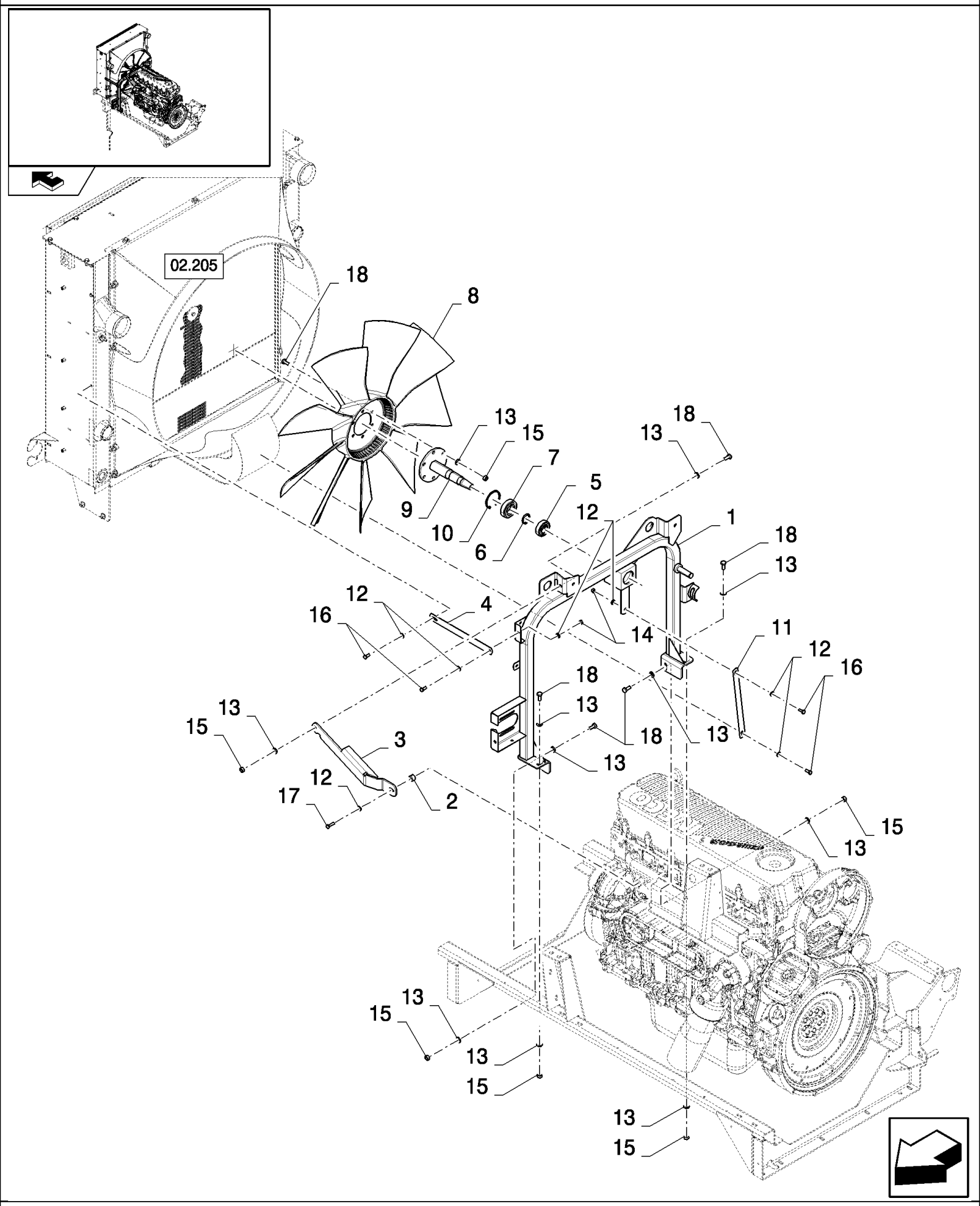

CSX7080 C659 - COMBINE (9/06-8/08)

02.204(A 01) ROTARY SCREEN : SHAFTS

ссылка	Номер детали	Кол-во	Описание
1	84457606	1	SUPPORT,
2	335873	1	SPACER,
3	84458524	1	SUPPORT,
4	84458839	1	SUPPORT, , BSN C619
5	210043	1	BEARING, BALL,
6	370004	1	RING, SNAP, M35, Ext,
7	84438926	1	BEARING ASSY,
8	84457284	1	FAN,
9	84457187	1	SHAFT,
10	370018	1	RING, SNAP,
11	84077442	1	SUPPORT, , BSN C619
11	84077442	2	SUPPORT, , ASN D620
12	322358	5	WASHER, SPRING, Belleville, M8,
13	140045	16	WASHER, SPRING, Belleville, M10,
14	9706690	2	NUT, M8, Cl 8,
15	100016	11	NUT, M10, Cl 8,
16	120104	4	SCREW, Hex, M8 x 20, 8.8,
17	43128	1	BOLT, Hex, M8 x 30, 8.8,
18	43139	11	SCREW, Hex, M10 x 25, 8.8, Full Thd,

02.205(A 01) ROTARY SCREEN : FRAME AND FAN

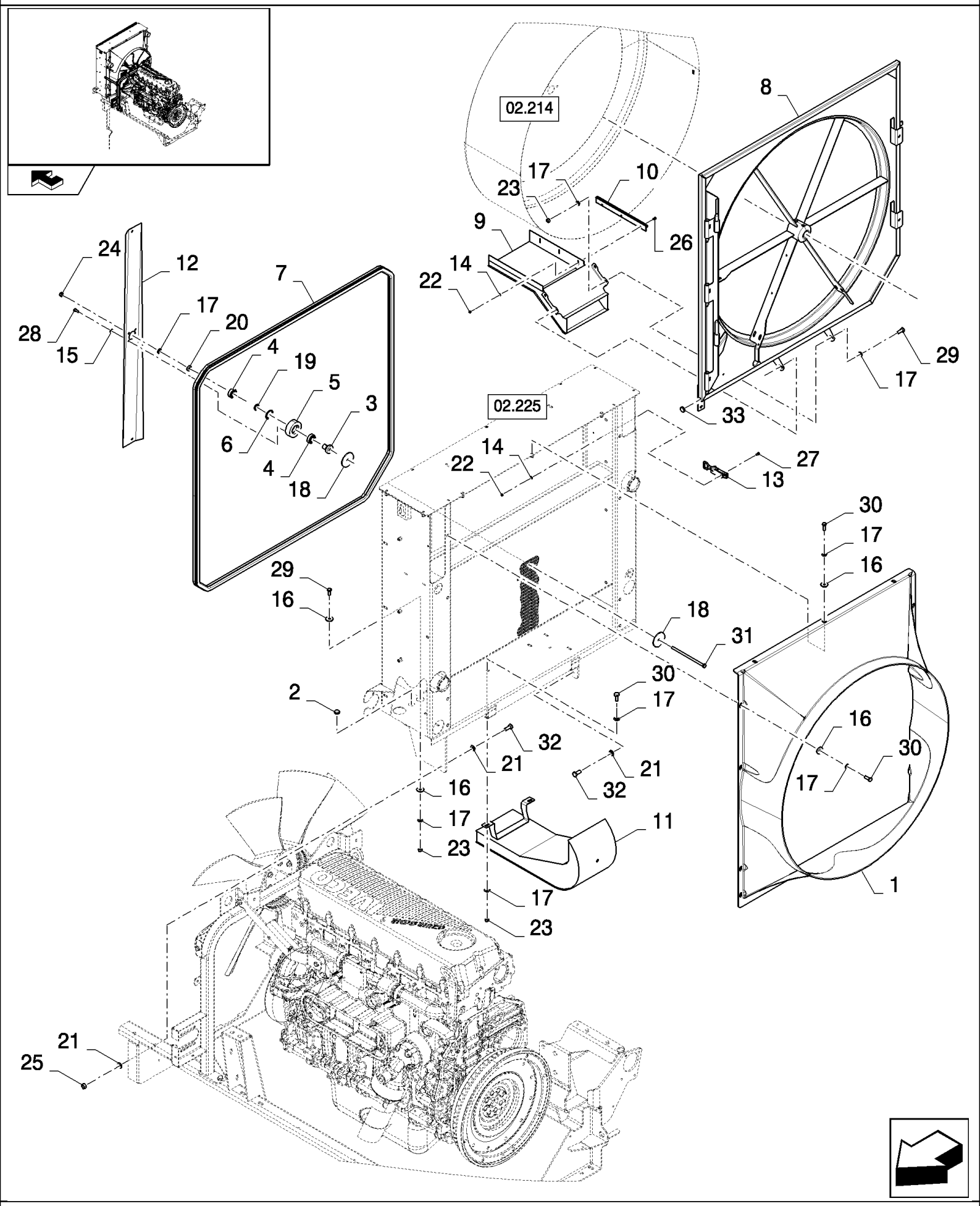

CSX7080 C659 - COMBINE (9/06-8/08)

02.205(A 01) ROTARY SCREEN : FRAME AND FAN

ссылка	Номер детали	Кол-во	Описание
1	84457607	1	HOUSING, FAN,
2	336456	1	PLUG,
3	84460219	1	SHAFT,
4	86629503	2	BEARING, BALL,
5	84437613	1	BUSHING,
6	300642	1	RING, SNAP, M35, Int,
7	401209	AR	SEAL PROTECTION, L=4.2M
8	87329038	1	DOOR,
9	84459384	1	DUCT, AIR,
10	84073019	1	BRUSH,
11	87331582	1	DUCT, AIR,
12	84455383	1	BLADE,
13	9513188	1	FASTENER,
14	322355	5	WASHER, Belleville, M4,
15	322357	4	WASHER, SPRING, Belleville, M6,
16	140041	15	WASHER, M8 x 28 x 3,
17	322358	26	WASHER, SPRING, Belleville, M8,
18	87329379	2	WASHER,
19	84334251	1	WASHER,
20	86592711	1	WASHER, M8 x 21 x 4,
21	140045	8	WASHER, SPRING, Belleville, M10,
22	100012	5	NUT, M4, Cl 8,
23	9706690	8	NUT, M8, Cl 8,
24	86629542	1	NUT, LOCK, M8 x 1.25, Cl 8,
25	100016	4	NUT, M10, Cl 8,
26	86585706	3	SCREW, Cross Pan Hd, M4 x 10,
27	86511042	2	SCREW, Cross Pan Hd, M4 x 16,
28	86508568	4	SCREW, Hex, M6 x 16, 8.8,
29	120104	6	SCREW, Hex, M8 x 20, 8.8,
30	43127	13	BOLT, Hex, M8 x 25, 8.8,
31	412110	1	BOLT, Hex, M8 x 170, 8.8,
32	43139	4	SCREW, Hex, M10 x 25, 8.8, Full Thd,
33	331233	1	PLUG, , ASN D604

02.206(A 01) AIR CIRCUIT

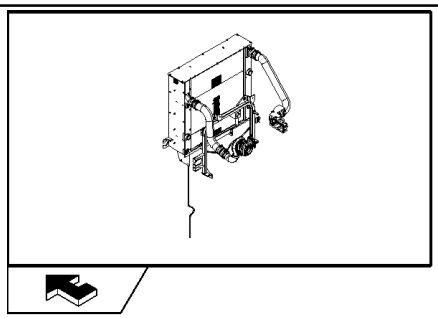

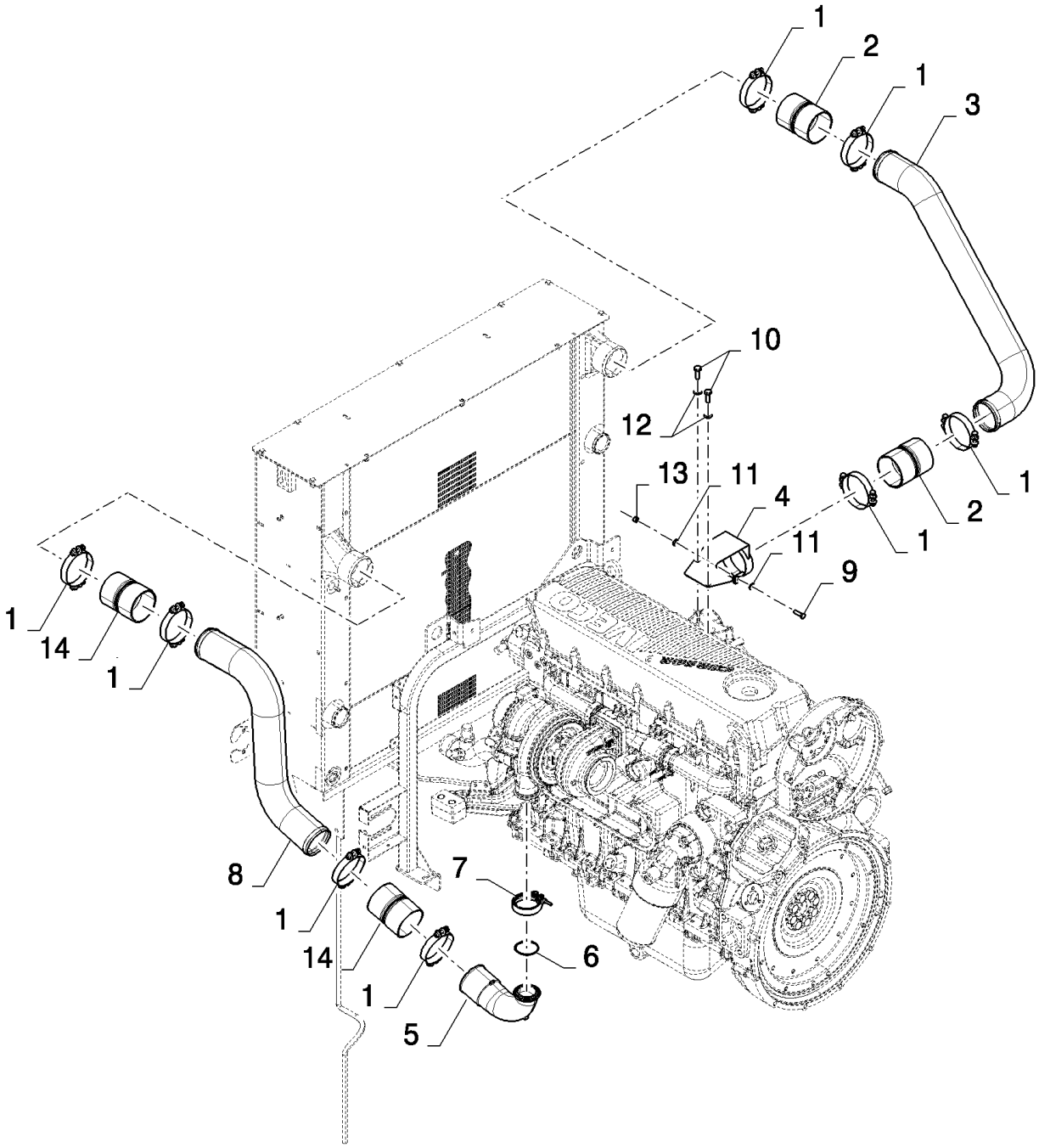

CSX7080 C659 - COMBINE (9/06-8/08)

02.206(A 01) AIR CIRCUIT

ссылка	Номер детали	Кол-во	Описание
1	84021019	8	CLAMP, , BSN C547
1	84021019	12	CLAMP, , ASN D548
2	87330024	2	HOSE,
3	84458325	1	TUBE,
4	87378105	1	SUPPORT,
5	84455255	1	ELBOW,
6	84448024	1	O-RING,
7	84448034	1	STRAP,
8	84458323	1	TUBE, , BSN C547
8	84458322	1	TUBE, , ASN D548
9	43128	1	BOLT, Hex, M8 x 30, 8.8,
10	43140	2	BOLT, Hex, M10 x 30, 8.8, Full Thd,
11	322358	2	WASHER, SPRING, Belleville, M8,
12	140045	2	WASHER, SPRING, Belleville, M10,
13	86629542	1	NUT, LOCK, M8 x 1.25, Cl 8,
14	87330024	2	HOSE, , BSN C547
14	87583835	2	HOSE, , BSN F548601
14	87714831	2	HOSE, , ASN D602

02.207(A 01) WATER CIRCUIT, SHUNT TANK

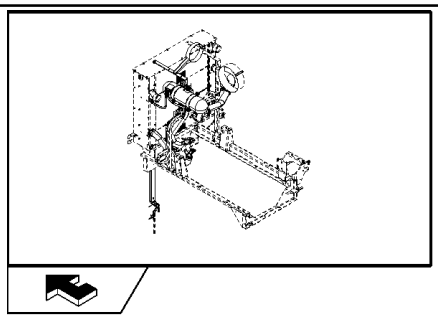

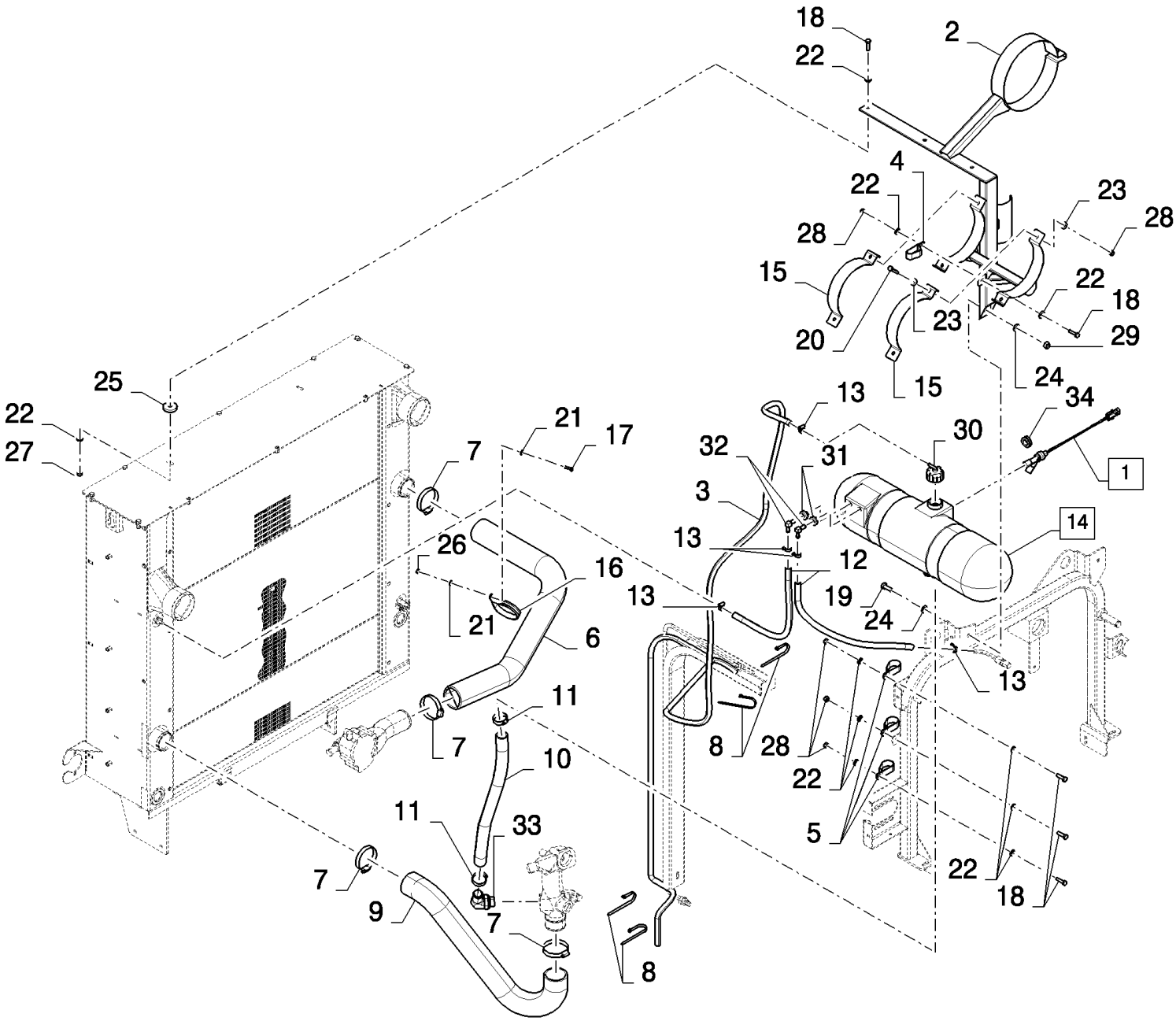

CSX7080 C659 - COMBINE (9/06-8/08)

02.207(A 01) WATER CIRCUIT, SHUNT TANK

ссылка	Номер детали	Кол-во	Описание
1	87377459	1	SENSOR, (34)
2	84457855	1	SUPPORT,
3	400813	AR	HOSE, FLEXIBLE, L=3.5M
4	417412	1	CLAMP,
5	9513271	3	CLAMP,
6	84458345	1	HOSE, FLEXIBLE,
7	556701	4	CLAMP,
8	86566989	6	STRAP, CABLE,
9	84457835	1	HOSE, FLEXIBLE,
10	84459151	1	HOSE, FLEXIBLE, , BSN C623
10	87605192	1	HOSE, , ASN D624
11	382527	2	CLAMP, HOSE,
12	84000314	AR	HOSE, L=1.17M
13	913888	5	CLAMP, HOSE,
14	84452234	1	TANK, (30 to 32)
15	84076174	2	CLAMP,
16	84439045	1	CLAMP,
17	120100	1	BOLT, Hex, M6 x 20, 8.8,
18	43128	5	BOLT, Hex, M8 x 30, 8.8,
19	43140	1	BOLT, Hex, M10 x 30, 8.8, Full Thd,
20	43129	4	BOLT, Hex, M8 x 40, 8.8,
21	322357	2	WASHER, SPRING, Belleville, M6,
22	322358	10	WASHER, SPRING, Belleville, M8,
23	378243	8	WASHER, M8,
24	140045	2	WASHER, SPRING, Belleville, M10,
25	9507949	1	WASHER,
26	353308	1	NUT, M6 x 1, Cl 8,
27	9706690	1	NUT, M8, Cl 8,
28	86629542	8	NUT, LOCK, M8 x 1.25, Cl 8,
29	100016	1	NUT, M10, Cl 8,
30	84072957	1	CAP,
31	86532842	1	BUSHING,
32	87050320	1	ELBOW,
33	87546092	1	FITTING,
34	122014	1	O-RING, -113, 70 Duro, .549" ID x .103" Thk, , ASN D560

02.208(C 01) ENGINE SUPPORTS

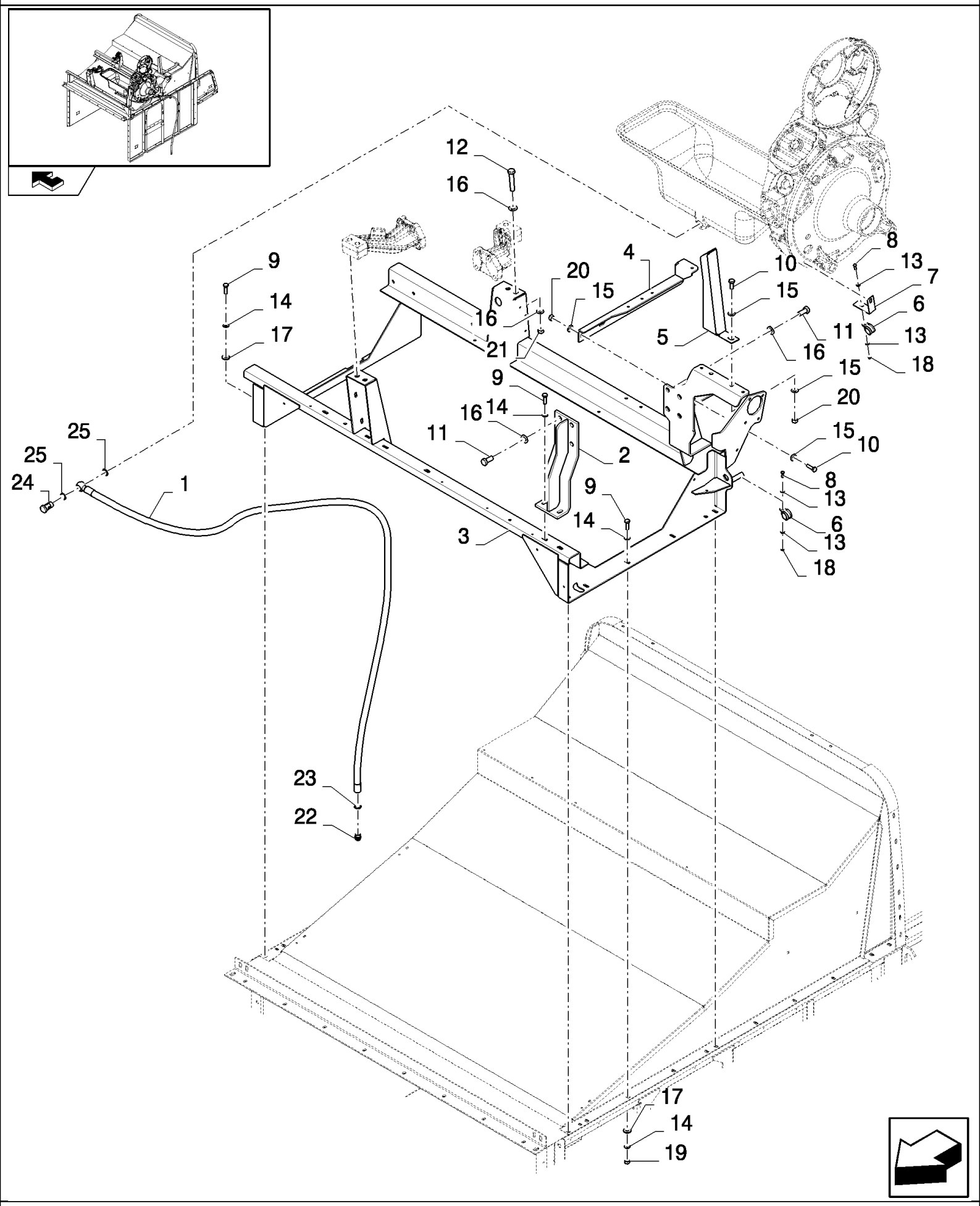

CSX7080 C659 - COMBINE (9/06-8/08)

02.208(C 01) ENGINE SUPPORTS

ссылка	Номер детали	Кол-во	Описание
1	84440909	1	HOSE, HYDRAULIC, (22 to 25)
2	87517197	1	SUPPORT,
3	84458112	1	SUPPORT,
4	84458163	1	SUPPORT,
5	84458161	1	SUPPORT,
6	418407	2	CLAMP,
7	9813452	1	BRACKET,
8	120100	2	BOLT, Hex, M6 x 20, 8.8,
9	9706704	12	BOLT, Hex, M10 x 35, 8.8, Full Thd,
10	9706687	4	SCREW, Hex, M12 x 30, 8.8,
11	86508583	8	BOLT, Hex, M16 x 35, 8.8,
12	120093	4	BOLT, Hex, M16 x 80, 8.8,
13	322357	4	WASHER, SPRING, Belleville, M6,
14	140045	18	WASHER, SPRING, Belleville, M10,
15	140046	8	WASHER, Belleville, M12,
16	140048	16	WASHER, SPRING, Belleville, M16,
17	332909	10	WASHER,
18	9706755	2	NUT, M6, Cl 8,
19	100016	6	NUT, M10, Cl 8,
20	9706685	4	NUT, M12, Cl 8,
21	100020	4	NUT, M16, Cl 8,
22	150060	1	PLUG,
23	9511034	1	GASKET,
24	412156	1	SCREW, HOLLOW,
25	220022	2	SEALRING,

02.210(A 01) DRIVE, ROTARY SCREEN AND FAN

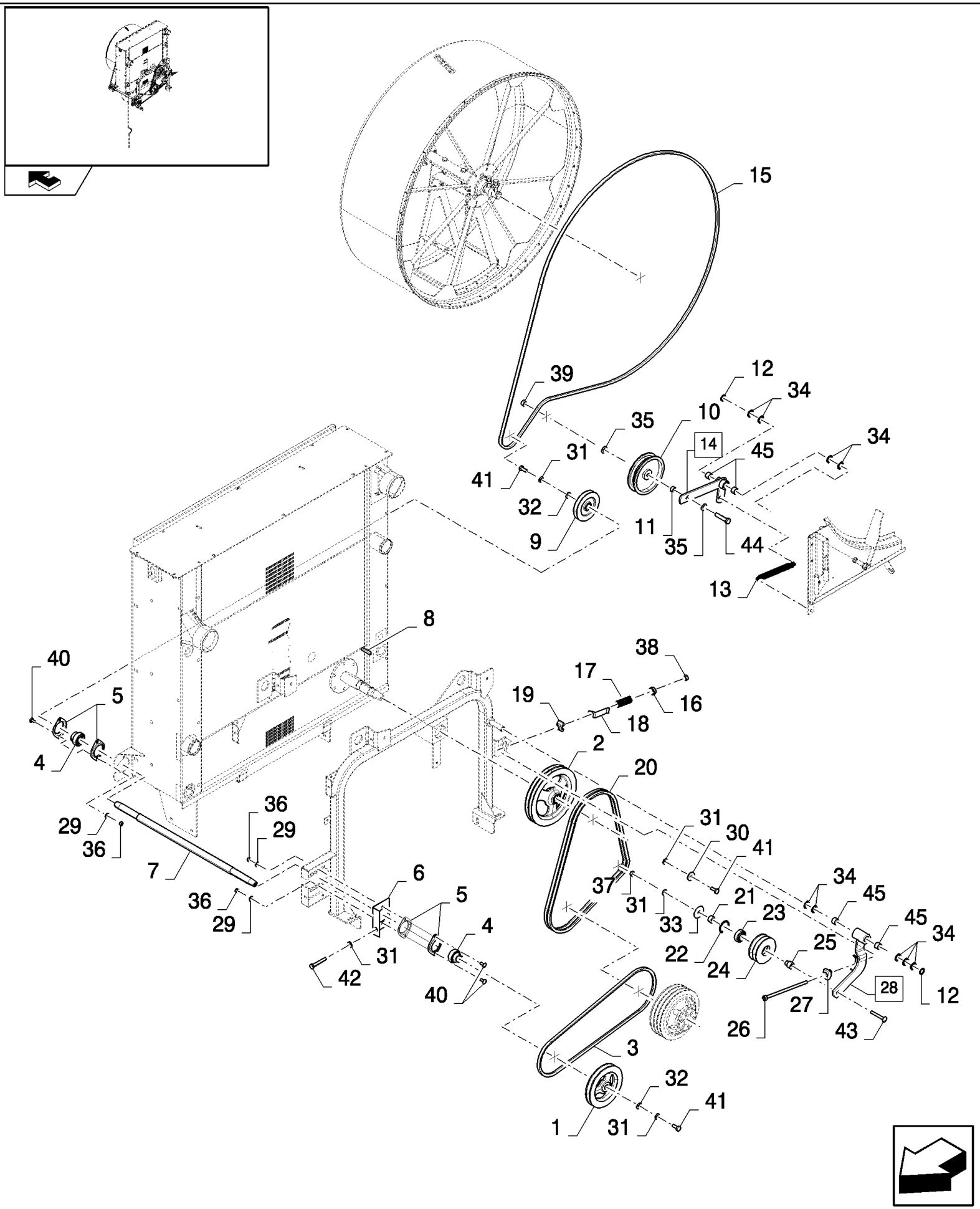

CSX7080 C659 - COMBINE (9/06-8/08)

02.210(A 01) DRIVE, ROTARY SCREEN AND FAN

ссылка	Номер детали	Кол-во	Описание
1	84069907	1	PULLEY,
2	84462175	1	PULLEY,
3	84817626	1	BELT, TRANSMISSION,
4	325103	2	BEARING, BALL,
5	86548974	4	FLANGE,
6	84069925	1	PLATE,
7	87329024	1	COUNTERSHAFT,
8	170005	1	KEY,
9	84069923	1	PULLEY, , BSN C563
9	84989988	1	PULLEY, , ASN D564
10	84072736	1	PULLEY,
11	84069986	1	BUSHING,
12	370024	2	RING, SNAP, M20, Ext,
13	180039	1	SPRING,
14	84069802	1	LEVER, (45)
15	439495	1	, BSN C563
15	87374615	1	BELT, , ASN D564
16	356728	1	PROTECTION CAP,
17	9817602	1	SPRING,
18	913108	1	INDICATOR,
19	442398	1	GUIDE,
20	84061463	1	SET OF BELTS,
21	449267	1	BUSHING,
22	300647	1	RING, SNAP, M47, Int,
23	727874	1	BEARING ASSY,
24	84072747	1	PULLEY,
25	84071567	1	SHAFT,
26	9514334	1	ROD,
27	754131	1	GUIDE,
28	84069771	1	LEVER, (45)
29	322358	4	WASHER, SPRING, Belleville, M8,
30	140042	1	WASHER, M10 x 34 x 3,
31	140045	5	WASHER, SPRING, Belleville, M10,
32	378244	2	WASHER, M10,
33	140198	1	WASHER,
34	443434	9	WASHER,
35	140046	2	WASHER, Belleville, M12,
36	9706690	4	NUT, M8, Cl 8,
37	100016	1	NUT, M10, Cl 8,
38	412141	1	NUT, LOCK, M10 x 1.5, Cl 8,
39	9706685	1	NUT, M12, Cl 8,
40	86507486	4	BOLT, CARRIAGE, Short NK, M8 x 20, Cl8.8, Full Thd,
41	43139	3	SCREW, Hex, M10 x 25, 8.8, Full Thd,
42	43144	1	SCREW, Hex, M10 x 70, 8.8,

02.210(A 01) DRIVE, ROTARY SCREEN AND FAN

ссылка	Номер детали	Кол-во	Описание
43	374894	1	BOLT, CARRIAGE, Short NK, M10 x 70, Cl8.8,
44	9706693	1	BOLT, Hex, M12 x 60, 8.8,
45	382974	2	BUSHING,

02.211(A 01) EXHAUST AND AIR FILTER

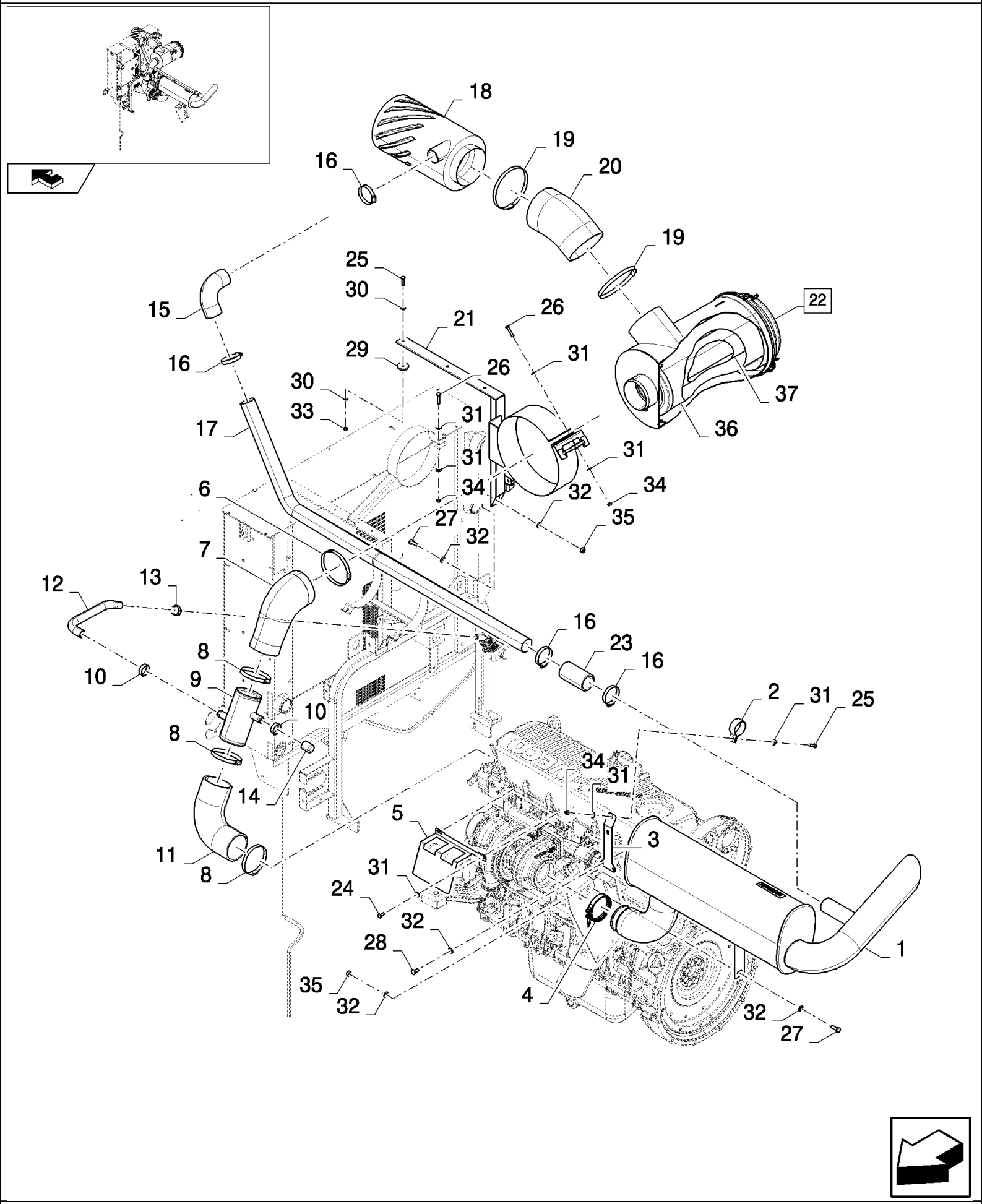

CSX7080 C659 - COMBINE (9/06-8/08)

02.211(A 01) EXHAUST AND AIR FILTER

ссылка	Номер детали	Кол-во	Описание
1	84458259	1	MUFFLER,
2	84042226	1	CLAMP,
3	87360775	1	PLATE, COVER,
4	84076899	1	CLAMP,
5	87342704	1	PLATE, COVER,
6	337049	1	CLAMP,
7	84458263	1	HOSE,
8	9706924	3	CLAMP, HOSE, #72, 4.06/5.00 Type F Worm,
9	84458265	1	TUBE,
10	382527	2	CLAMP, HOSE,
11	84455137	1	ELBOW,
12	87336889	1	HOSE,
13	9706921	1	CLAMP, HOSE, #10, 0.56/1.06 Type F Worm,
14	84983512	1	CUP, COVER,
15	84334353	1	HOSE,
16	556701	4	CLAMP,
17	84458268	1	TUBE,
18	84458290	1	PRE-CLEANER ASSY, AIR,
19	84012068	2	CLAMP,
20	84458262	1	HOSE,
21	84457838	1	SUPPORT,
22	84442615	1	FILTER, AIR, (36,37)
23	84011850	1	HOSE,
24	120104	2	SCREW, Hex, M8 x 20, 8.8,
25	43128	2	BOLT, Hex, M8 x 30, 8.8,
26	43129	3	BOLT, Hex, M8 x 40, 8.8,
27	43140	2	BOLT, Hex, M10 x 30, 8.8, Full Thd,
28	43138	2	SCREW, Hex, M10 x 20, 8.8, Full Thd,
29	9507949	1	WASHER,
30	322358	2	WASHER, SPRING, Belleville, M8,
31	378243	10	WASHER, M8,
32	140045	6	WASHER, SPRING, Belleville, M10,
33	9706690	1	NUT, M8, Cl 8,
34	86629542	4	NUT, LOCK, M8 x 1.25, Cl 8,
35	100016	2	NUT, M10, Cl 8,
36	84072431	1	FILTER, ELEMENT,
37	84072430	1	FILTER, ELEMENT,

02.212(01) MAIN DRIVE

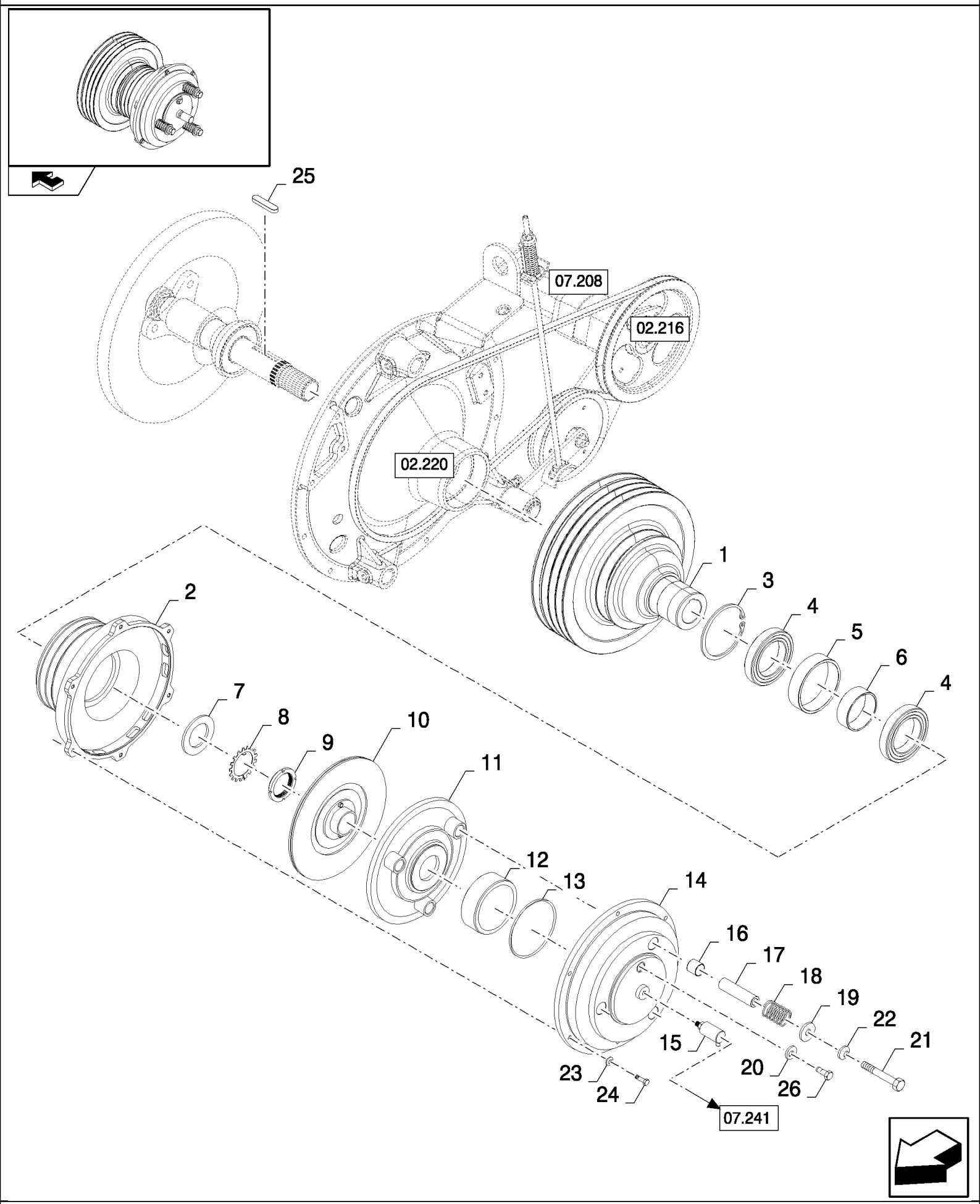

CSX7080 C659 - COMBINE (9/06-8/08)

02.212(01) MAIN DRIVE

ссылка	Номер детали	Кол-во	Описание
1	84460690	1	PULLEY,
2	84462556	1	PULLEY,
3	388294	1	RING, SNAP, M125, Int,
4	825070	2	BEARING ASSY,
5	84026151	1	SPACER,
6	84026152	1	SPACER,
7	84461557	1	WASHER,
8	37426	1	WASHER, LOCK, Bearing, W-11,
9	9615770	1	NUT,
10	84462006	1	CLUTCH & DISC ASSY,
11	84460220	1	RING, PRESSURE,
12	84460226	1	PISTON,
13	87331424	1	O-RING,
14	84460663	1	DISC,
15	86566566	1	COUPLING,
16	420760	3	BUSHING,
17	84460239	3	BUSHING,
18	84073712	3	SPRING,
19	395606	3	WASHER,
20	373816	1	WASHER, COPPER,
21	309308	3	BOLT, Hex, M12 x 120, 8.8,
22	140046	3	WASHER, Belleville, M12,
23	322358	6	WASHER, SPRING, Belleville, M8,
24	43127	6	BOLT, Hex, M8 x 25, 8.8,
25	84460806	1	KEY,
26	378056	1	BOLT, Hex, M6 x 10, 8.8, Full Thd,

02.214(A 01) REVOLVING DUST SCREEN

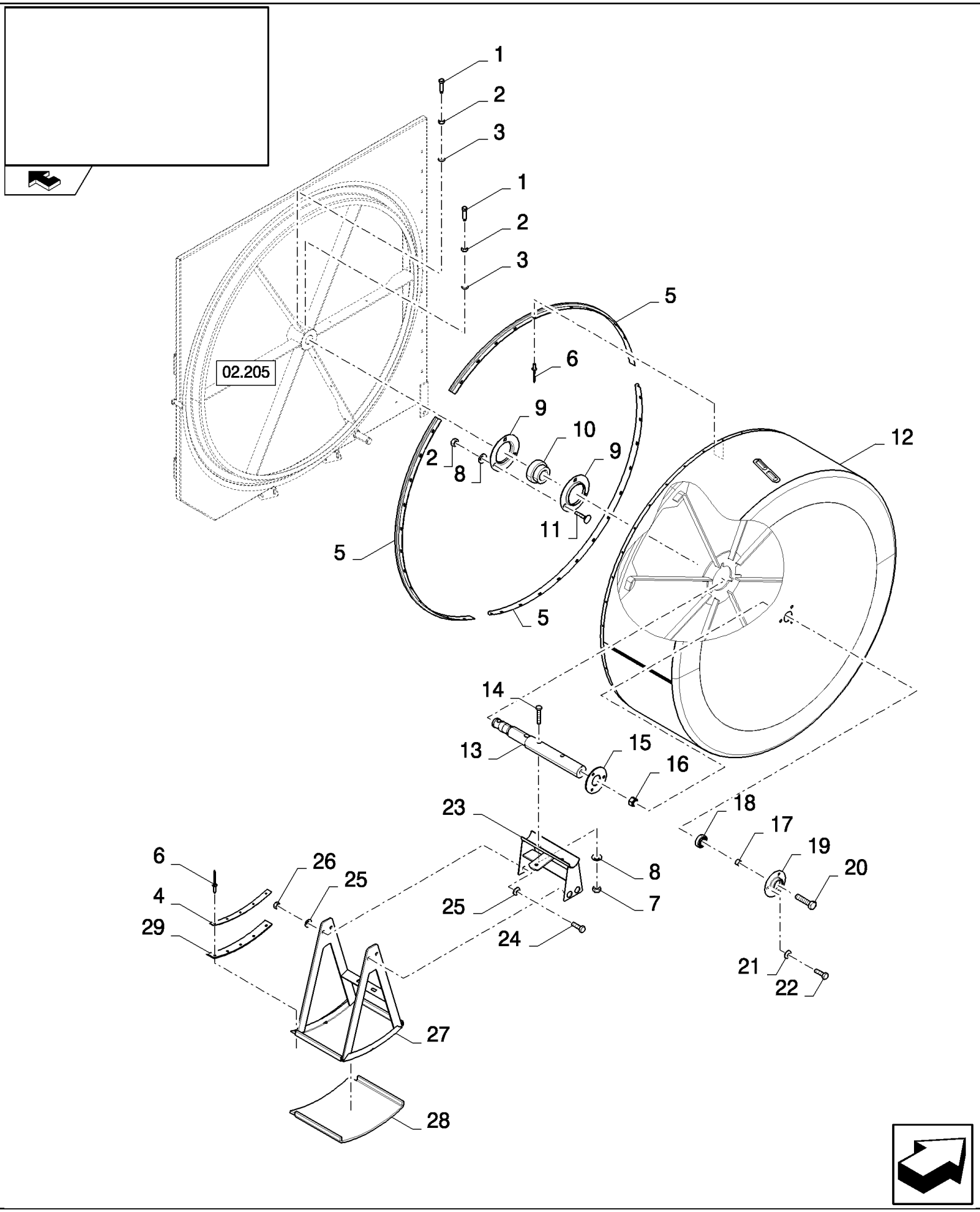

CSX7080 C659 - COMBINE (9/06-8/08)

02.214(A 01) REVOLVING DUST SCREEN

ссылка	Номер детали	Кол-во	Описание
1	391136	2	SET SCREW, Hex Soc, M10 x 40, M10x40
2	100016	5	NUT, M10, Cl 8,
3	86511323	2	WASHER, M10 x 20 x 2,
4	84434286	1	PLATE, FIXING,
5	84057430	3	BRUSH,
6	NS	41	NOT SERVICED, Rivet
7	100037	2	NUT, M10 x 1.5, Cl 8,
8	140045	5	WASHER, SPRING, Belleville, M10,
9	36403	2	FLANGE,
10	322360	1	BEARING, BALL,
11	120041	3	BOLT, CARRIAGE, Short NK, M10 x 20, Cl8.8, Full Thd,
12	87328503	1	DUST CAP,
13	87329360	1	SHAFT,
14	120070	2	BOLT, Hex, M10 x 60, 8.8,
15	84071581	1	SUPPORT,
16	9706685	1	NUT, M12, Cl 8,
17	434182	1	BUSHING,
18	362804	1	BEARING ASSY,
19	365018	1	FLANGE,
20	120122	1	BOLT, Hex, M12 x 50, 8.8, Full Thd,
21	322357	3	WASHER, SPRING, Belleville, M6,
22	86508568	3	SCREW, Hex, M6 x 16, 8.8,
23	84449135	1	SUPPORT,
24	120104	2	SCREW, Hex, M8 x 20, 8.8,
25	322358	6	WASHER, SPRING, Belleville, M8,
26	9706690	4	NUT, M8, Cl 8,
27	87331809	1	SUPPORT,
28	87377800	1	INSULATOR,
29	84434055	1	CANVAS,

02.215(01) BRUSH IN DUST SCREEN

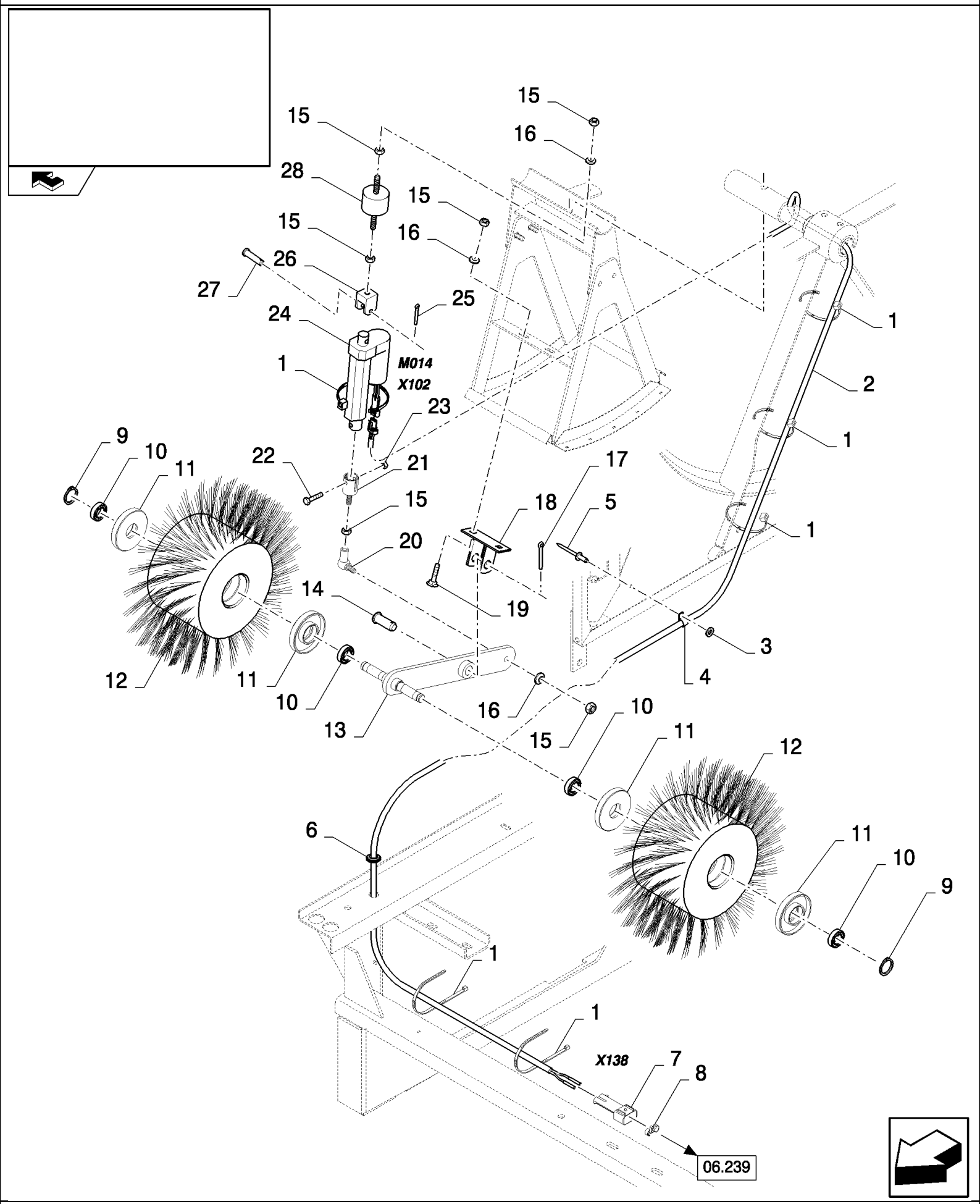

CSX7080 C659 - COMBINE (9/06-8/08)

02.215(01) BRUSH IN DUST SCREEN

ссылка	Номер детали	Кол-во	Описание
1	86566989	6	STRAP, CABLE,
2	84437301	1	HARNESS, WIRE, , SEE FIGURE 06.526
3	9824326	1	WASHER, M5, 5MM
4	9507807	1	CLAMP,
5	9512290	1	RIVET, Rivet
6	411809	1	GROMMET,
7	84074630	1	CONNECTOR, WIRE,
8	86500166	1	PLUG,
9	301615	2	RING, SNAP,
10	9815813	4	BEARING ASSY,
11	84437302	4	HOUSING, BEARING,
12	84449076	2	BRUSH,
13	84449090	1	LEVER,
14	84072127	1	PIN,
15	9706690	7	NUT, M8, Cl 8,
16	322358	4	WASHER, SPRING, Belleville, M8,
17	130007	1	PIN, SPLIT (COTTER), M4 x 25,
18	84071754	1	SUPPORT,
19	86507486	2	BOLT, CARRIAGE, Short NK, M8 x 20, Cl8.8, Full Thd,
20	412439	1	BALL JOINT,
21	84071712	1	CLEVIS,
22	86977789	1	SCREW, Hex, M6 x 35, 8.8,
23	353308	1	NUT, M6 x 1, Cl 8,
24	84440048	1	ACTUATOR, , SEE FIGURE 06.701
25	86977785	1	PIN, SPLIT (COTTER), M1.6 x 20,
26	84026054	1	SUPPORT,
27	376876	1	PIN, CLEVIS, M6 x 30,
28	393802	1	SHOCK ABSORBER,

02.216(01) HYDRAULIC PUMP DRIVE

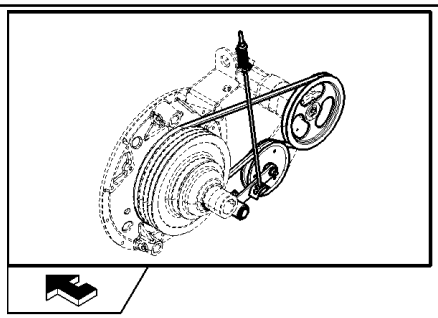

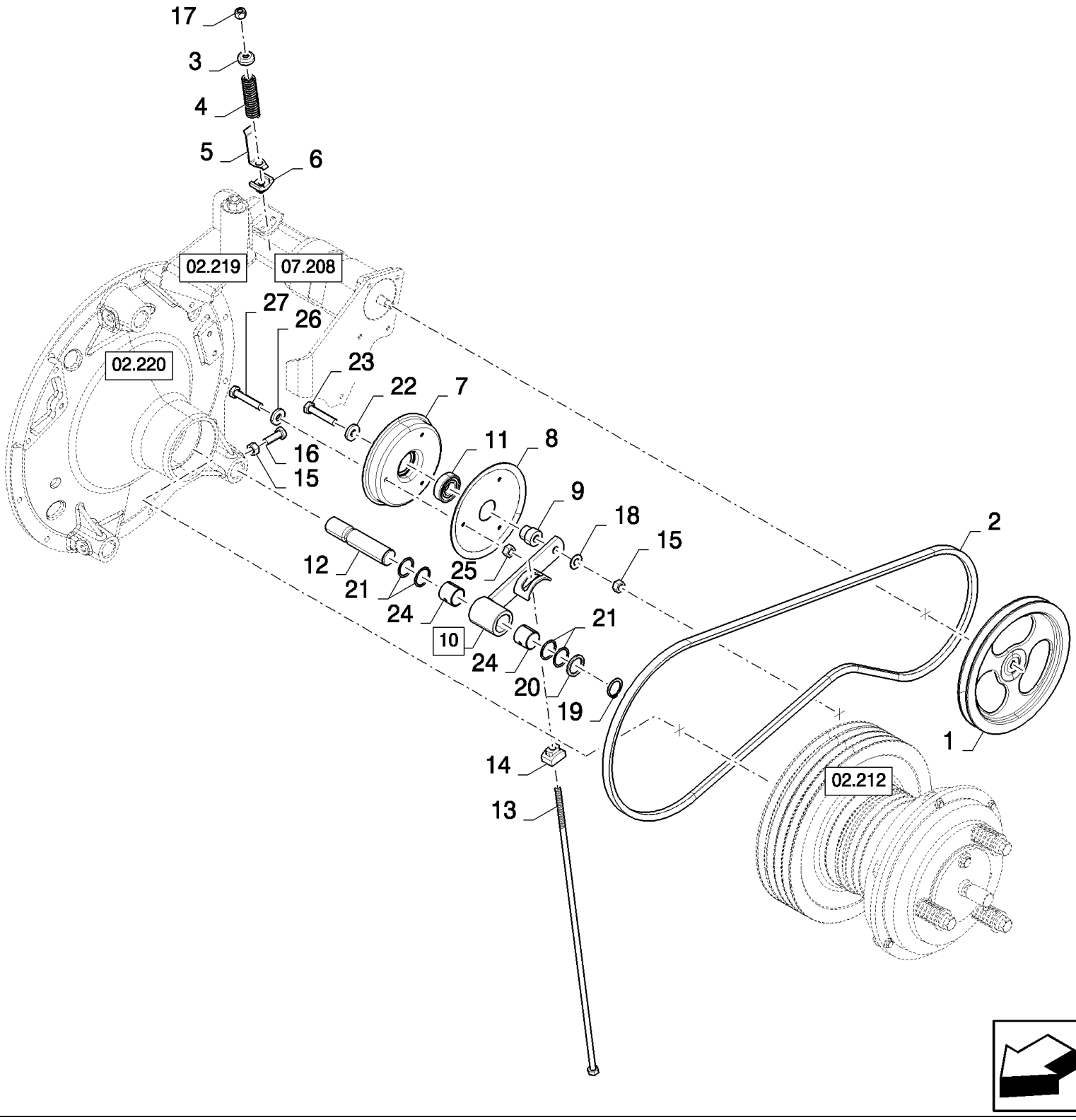

CSX7080 C659 - COMBINE (9/06-8/08)

02.216(01) HYDRAULIC PUMP DRIVE

ссылка	Номер детали	Кол-во	Описание
1	84980773	1	PULLEY,
2	427456	1	BELT,
3	356728	1	PROTECTION CAP,
4	440651	1	SPRING, , BSN C543
4	9817602	1	SPRING, , ASN D544
5	913108	1	INDICATOR,
6	442398	1	GUIDE,
7	9839871	1	HALF-PULLEY,
8	330737	1	HALF-PULLEY,
9	84071951	1	BUSHING,
10	84459029	1	ARM, (24)
11	443898	1	BEARING, BALL,
12	84980749	1	SHAFT,
13	84459088	1	STUD,
14	754131	1	GUIDE,
15	9706685	2	NUT, M12, Cl 8,
16	300389	1	BOLT, Hex, M12 x 35, 8.8, Full Thd,
17	412141	1	NUT, LOCK, M10 x 1.5, Cl 8,
18	140046	1	WASHER, Belleville, M12,
19	370003	1	RING, SNAP, M30, Ext,
20	140110	1	WASHER,
21	140108	4	WASHER,
22	84000016	1	WASHER,
23	9706693	1	BOLT, Hex, M12 x 60, 8.8,
24	420410	2	BUSHING,
25	86508568	3	SCREW, Hex, M6 x 16, 8.8, , ASN D544
26	322357	3	WASHER, SPRING, Belleville, M6, , ASN D544
27	9706755	3	NUT, M6, Cl 8, , ASN D544

02.217(A 01) HYDROSTATIC PUMP DRIVE

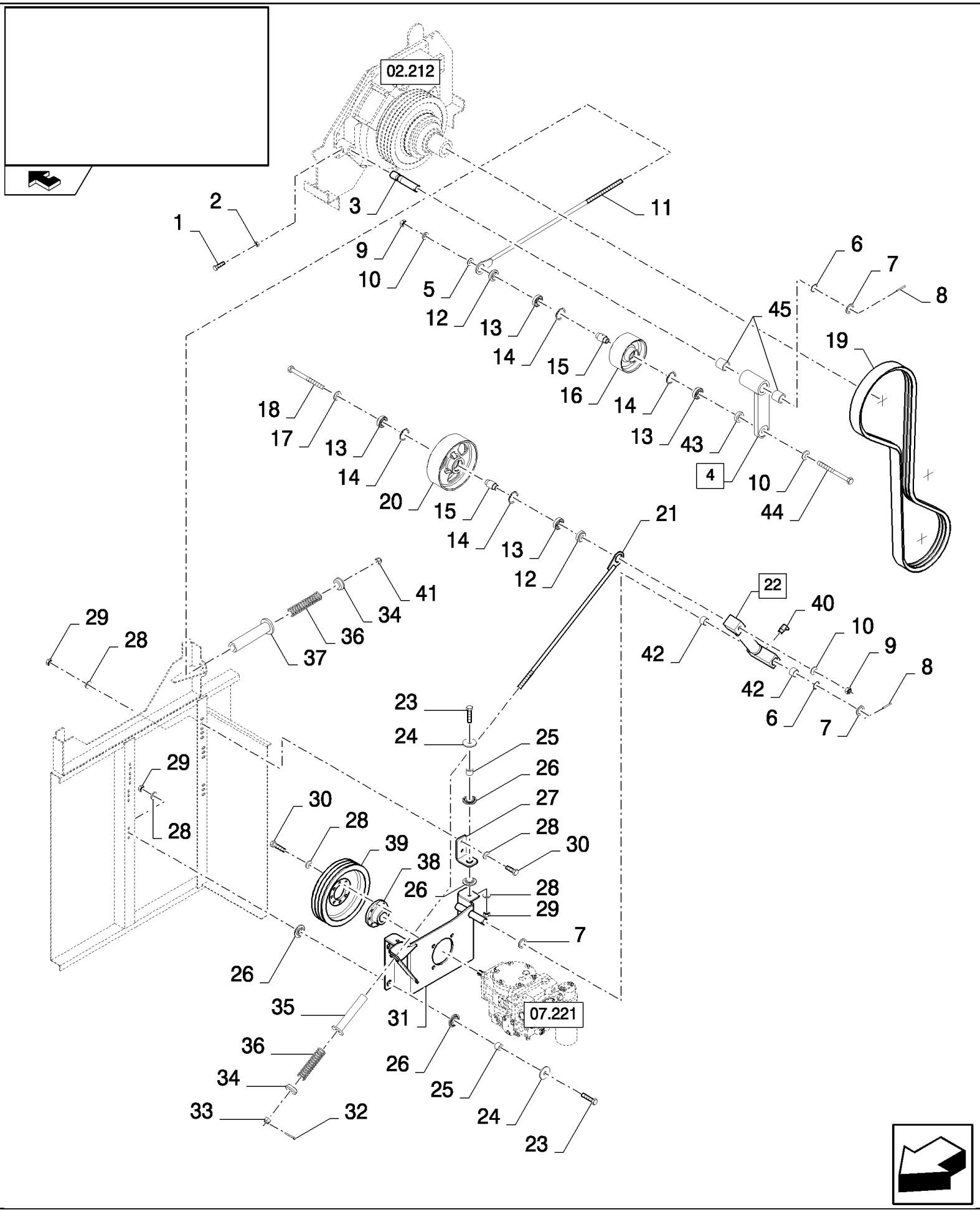

CSX7080 C659 - COMBINE (9/06-8/08)

02.217(A 01) HYDROSTATIC PUMP DRIVE

ссылка	Номер детали	Кол-во	Описание
1	86629541	1	BOLT, Hex, M12 x 40, 8.8, Full Thd,
2	9706685	1	NUT, M12, Cl 8,
3	84458522	1	SHAFT,
4	84455918	1	ARM, (45)
5	84005115	4	WASHER,
6	140108	AR	WASHER, 31MM
7	84814901	3	WASHER,
8	412689	2	PIN, LOCK, M8 x 50, Slotted,
9	100020	2	NUT, M16, Cl 8,
10	140048	3	WASHER, SPRING, Belleville, M16,
11	84447338	1	ROD, THREADED, , FOR CSX7060 LATERALE ONLY, FOR CSX7080 ONLY, FOR CSX7060 ONLY
11	84447292	1	ROD, THREADED, , FOR CSX7080 LATERALE ONLY
12	84437259	2	BUSHING,
13	443898	4	BEARING, BALL,
14	370011	4	RING, SNAP, M52, Int,
15	84437588	2	SLEEVE,
16	84980775	1	WHEEL, IDLER,
17	140190	1	WASHER, 16MM
18	84435244	2	BOLT, Hex, M16 x 180, 8.8, M16x180
19	84607713	1	BELT, TRANSMISSION, , FOR CSX7080 ONLY
19	84607712	1	BELT, TRANSMISSION, , FOR CSX7060 ONLY
19	87721960	1	BELT, TRANSMISSION, , FOR CSX7080 LATERALE ONLY, FOR CSX7060 LATERALE ONLY
20	84437268	1	WHEEL, IDLER,
21	84447333	1	ROD, THREADED,
22	84447237	1	ARM, (42)
23	120068	6	BOLT, Hex, M10 x 40, 8.8, Full Thd,
24	84817997	6	WASHER, 40 OD x 11 ID x 3 mm Thick
25	84989876	6	BUSHING,
26	84989853	12	DAMPER,
27	84989870	2	BRACKET,
28	140045	22	WASHER, SPRING, Belleville, M10,
29	100016	10	NUT, M10, Cl 8,
30	43140	12	BOLT, Hex, M10 x 30, 8.8, Full Thd,
31	84447272	1	SUPPORT, , BSN C615
31	87720647	1	PLATE, MOUNTING, , FOR CSX7060 LATERALE ONLY, FOR CSX7080 LATERALE ONLY, FOR CSX7080 ONLY, ASN D616
31	84447273	1	SUPPORT, , FOR CSX7060 ONLY
32	412685	1	PIN, SPLIT (COTTER), M4 x 32,
33	84437882	1	NUT, SLOTTED, M16 x 2, Cl 8,
34	84447242	2	WASHER, RUBBER,
35	84447601	1	RETAINER,
36	84447615	2	SPRING,
37	84447581	1	RETAINER,
38	84437986	1	HUB, , FOR CSX7080 ONLY, FOR CSX7080 LATERALE ONLY, FOR CSX7060 LATERALE ONLY

CSX7080 C659 - COMBINE (9/06-8/08)

02.217(A 01) HYDROSTATIC PUMP DRIVE

ссылка	Номер детали	Кол-во	Описание
38	84980732	1	HUB, , FOR CSX7060 ONLY
39	84437988	1	PULLEY, , FOR CSX7080 ONLY
39	84980717	1	PULLEY, , FOR CSX7060 ONLY, FOR CSX7060 LATERALE ONLY
39	84437983	1	PULLEY, , FOR CSX7080 LATERALE ONLY
40	332040	1	NIPPLE, LUBE, 90є, 1/8" NPT x .84" lg,
41	412066	1	NUT, LOCK, M16 x 2, Cl 8, M16
42	420434	2	BUSHING,
43	84064578	1	BUSHING,
44	334967	1	BOLT, Hex, M16 x 140, 8.8,
45	420410	2	BUSHING,

02.219(01) MAIN DRIVE

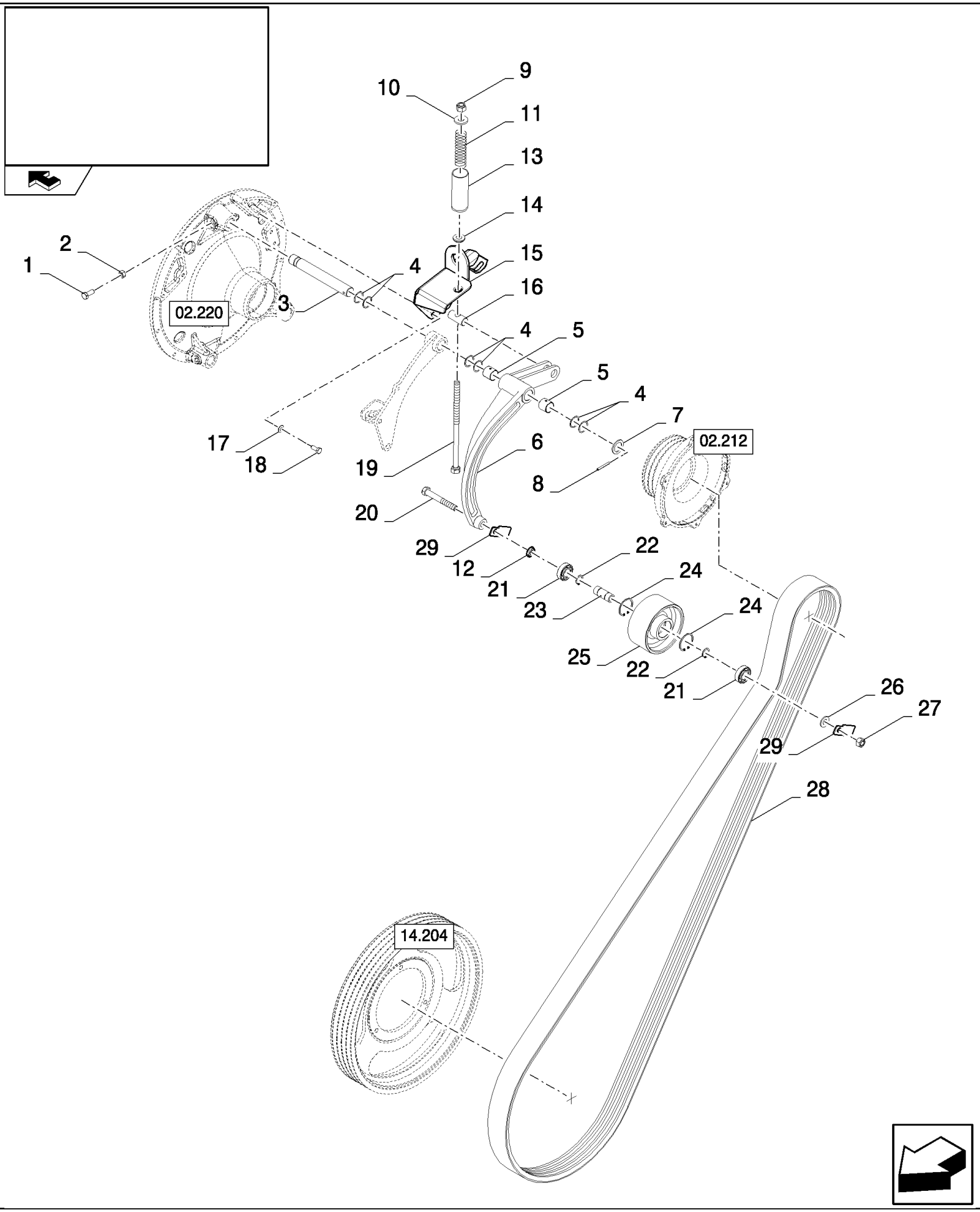

CSX7080 C659 - COMBINE (9/06-8/08)

02.219(01) MAIN DRIVE

ссылка	Номер детали	Кол-во	Описание
1	120122	1	BOLT, Hex, M12 x 50, 8.8, Full Thd,
2	9706685	1	NUT, M12, Cl 8,
3	84983314	1	SHAFT,
4	140108	6	WASHER, 31MM
5	420410	2	BUSHING,
6	84457777	1	LEVER,
7	84814901	1	WASHER,
8	333960	1	PIN, LOCK, M6 x 50, Slotted,
9	412066	1	NUT, LOCK, M16 x 2, Cl 8, M16
10	84005115	1	WASHER,
11	392328	1	SPRING,
12	84457813	1	RING,
13	84457866	1	INDICATOR,
14	450869	1	WASHER,
15	84459112	1	SUPPORT,
16	321886	1	SPINDLE,
17	140045	3	WASHER, SPRING, Belleville, M10, , BSN C543
17	140045	1	WASHER, SPRING, Belleville, M10, , ASN D544
18	43139	3	SCREW, Hex, M10 x 25, 8.8, Full Thd, M10x25, BSN C543
18	43139	1	SCREW, Hex, M10 x 25, 8.8, Full Thd, , ASN D544
19	450871	1	BOLT, , BSN C555
19	87601143	1	ROD, , ASN D556
20	371221	1	BOLT, Hex, M16 x 160, 8.8,
21	443898	2	BEARING, BALL,
22	370002	2	RING, SNAP, M25, Ext,
23	84980609	1	BUSHING,
24	370011	2	RING, SNAP, M52, Int,
25	84980775	1	WHEEL, IDLER,
26	378246	1	WASHER, 16MM
27	86000441	1	NUT, M16 x 2, Cl 8,
28	84993120	1	BELT, TRANSMISSION,
29	84457807	2	PLATE,

02.220(A 01) MAIN SHAFT ON ENGINE

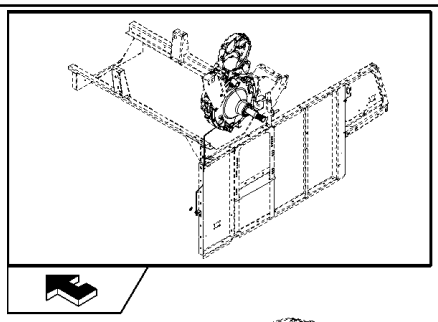

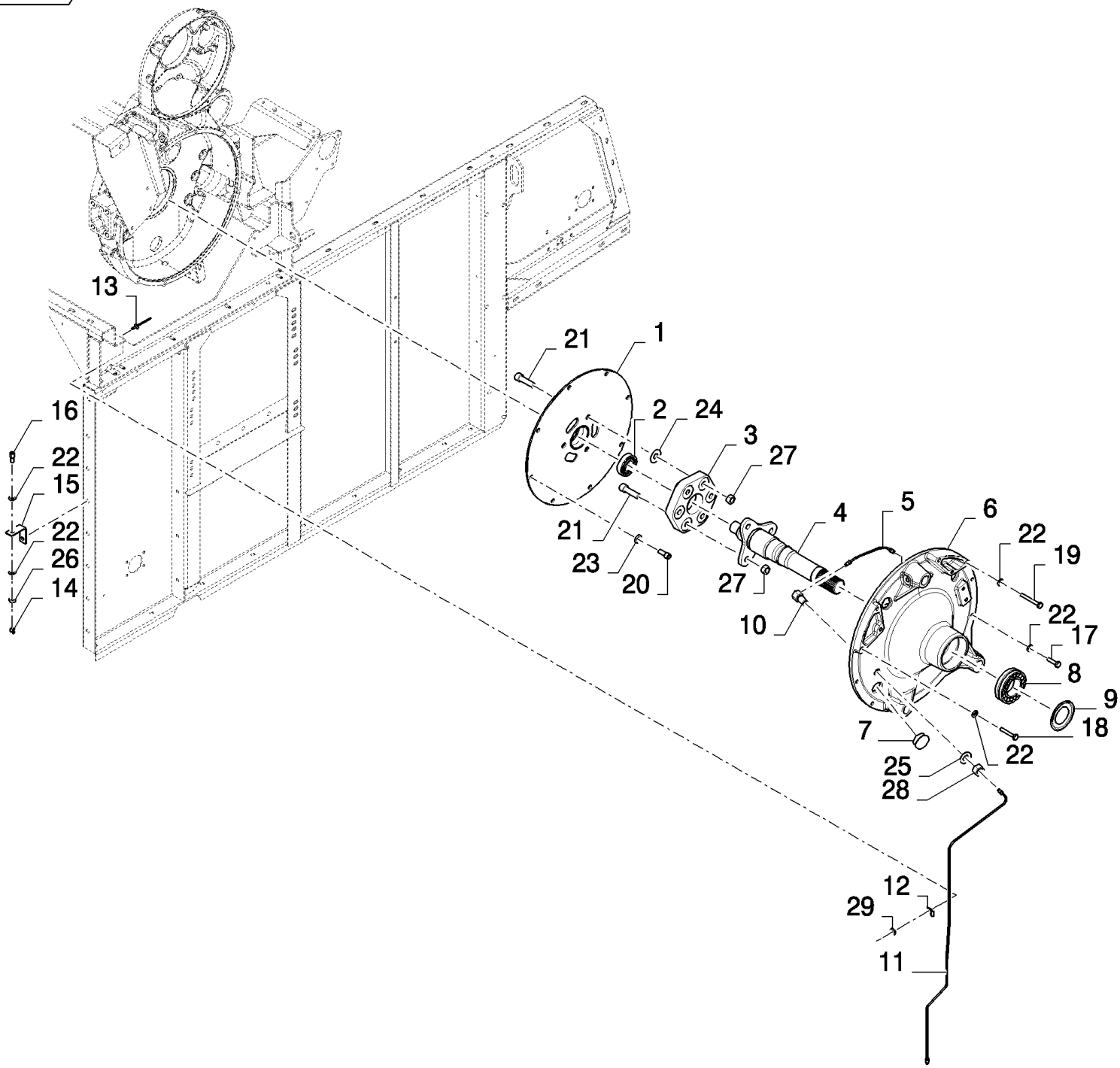

CSX7080 C659 - COMBINE (9/06-8/08)

02.220(A 01) MAIN SHAFT ON ENGINE

ссылка	Номер детали	Кол-во	Описание
1	84455234	1	DISC,
2	84441185	1	BEARING ASSY,
3	450679	1	COUPLING, FLEXIBLE,
4	84455261	1	SHAFT,
5	84459847	1	TUBE,
6	84457208	1	HOUSING,
7	9513759	4	PLUG,
8	428162	1	BEARING ASSY,
9	433833	1	SEALRING,
10	87319033	1	CONNECTOR, HYD.,
11	84462621	1	TUBE,
12	9837759	1	CLAMP,
13	9512290	1	RIVET,
14	84814929	1	NIPPLE, LUBE,
15	87333718	1	SUPPORT,
16	84817004	1	CONNECTOR, HYD.,
17	325829	7	BOLT, Hex, M10 x 45, 8.8,
18	43144	2	SCREW, Hex, M10 x 70, 8.8,
19	120074	2	BOLT, Hex, M10 x 90, 8.8,
20	86512142	8	SCREW, Hex Soc Hd, M12 x 30, 12.9,
21	9819596	6	SCREW,
22	140045	13	WASHER, SPRING, Belleville, M10,
23	140046	8	WASHER, Belleville, M12,
24	393062	3	WASHER,
25	322359	1	WASHER, SPRING, Belleville, M20,
26	100016	1	NUT, M10, Cl 8,
27	100020	6	NUT, M16, Cl 8,
28	9706694	1	NUT, M20, Cl 8,
29	322356	1	WASHER,

02.221(B 01) BLOW-OFF SYSTEM, AIR COMPRESSOR

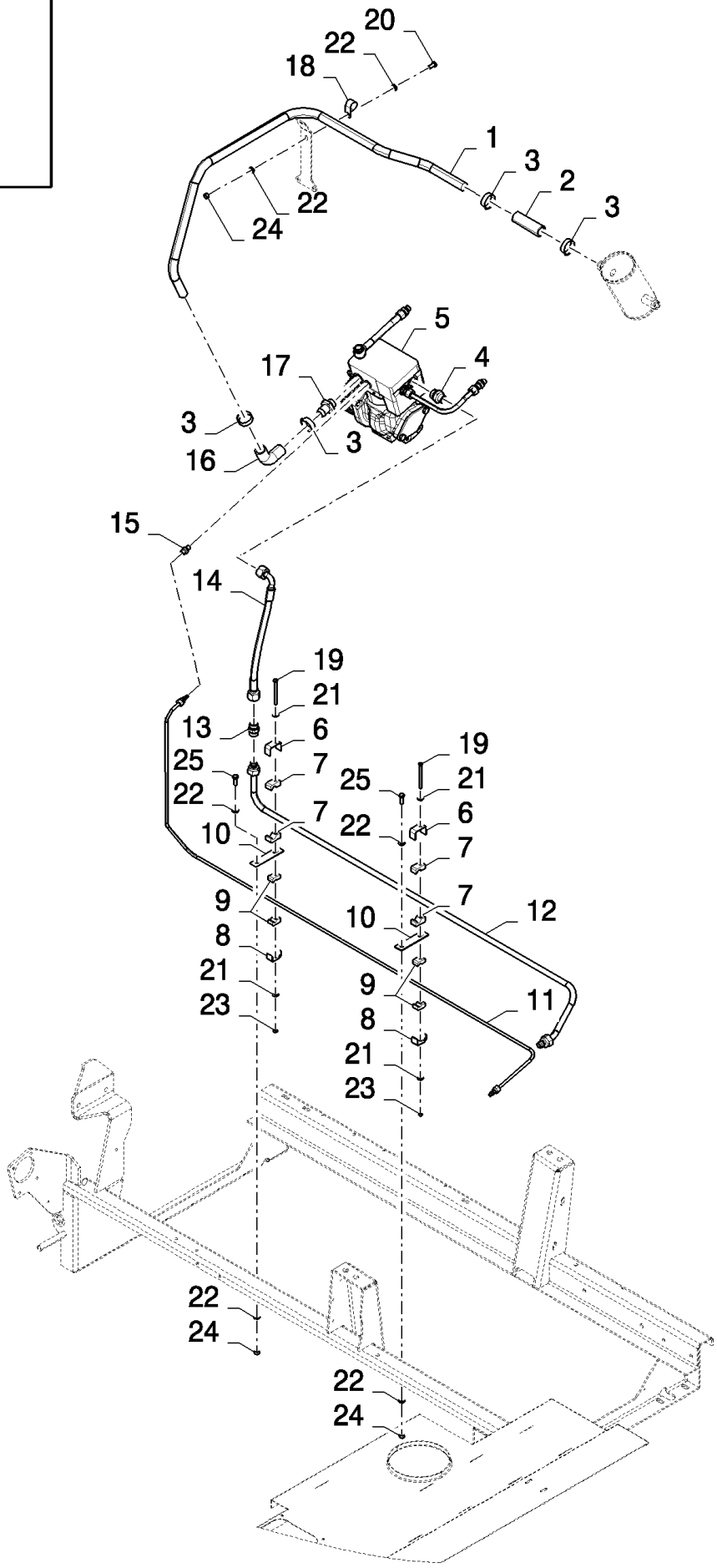

CSX7080 C659 - COMBINE (9/06-8/08)

02.221(B 01) BLOW-OFF SYSTEM, AIR COMPRESSOR

ссылка	Номер детали	Кол-во	Описание
1	84460946	1	PIPE, VENTILATION,
2	84334169	1	HOSE,
3	382527	4	CLAMP, HOSE,
4	84435826	1	CONNECTOR, HYD.,
5	87520365	1	COMPRESSOR, AIR,
6	433100	2	SUPPORT,
7	433007	4	CLAMP,
8	433101	2	SUPPORT,
9	433008	4	CLAMP,
10	87523425	2	PLATE,
11	87526153	1	PIPE, VENTILATION,
12	87526151	1	PIPE, VENTILATION,
13	335174	1	CONNECTOR, HYD.,
14	87370312	1	TUBE,
15	9513082	1	CONNECTOR, HYD.,
16	84334134	1	HOSE,
17	84036669	1	CONNECTOR, HYD.,
18	9827902	1	CLAMP, 1", Insul, 3/8" Bolt,
19	86508570	1	SCREW, Hex, M6 x 80, 8.8,
20	120104	1	SCREW, Hex, M8 x 20, 8.8,
21	412649	4	WASHER, SPRING, Belleville, M6,
22	322358	6	WASHER, SPRING, Belleville, M8,
23	9706755	2	NUT, M6, Cl 8,
24	9706690	3	NUT, M8, Cl 8,
25	43127	2	BOLT, Hex, M8 x 25, 8.8,

02.222(B 01) BLOW-OFF SYSTEM, AIR RESERVOIR

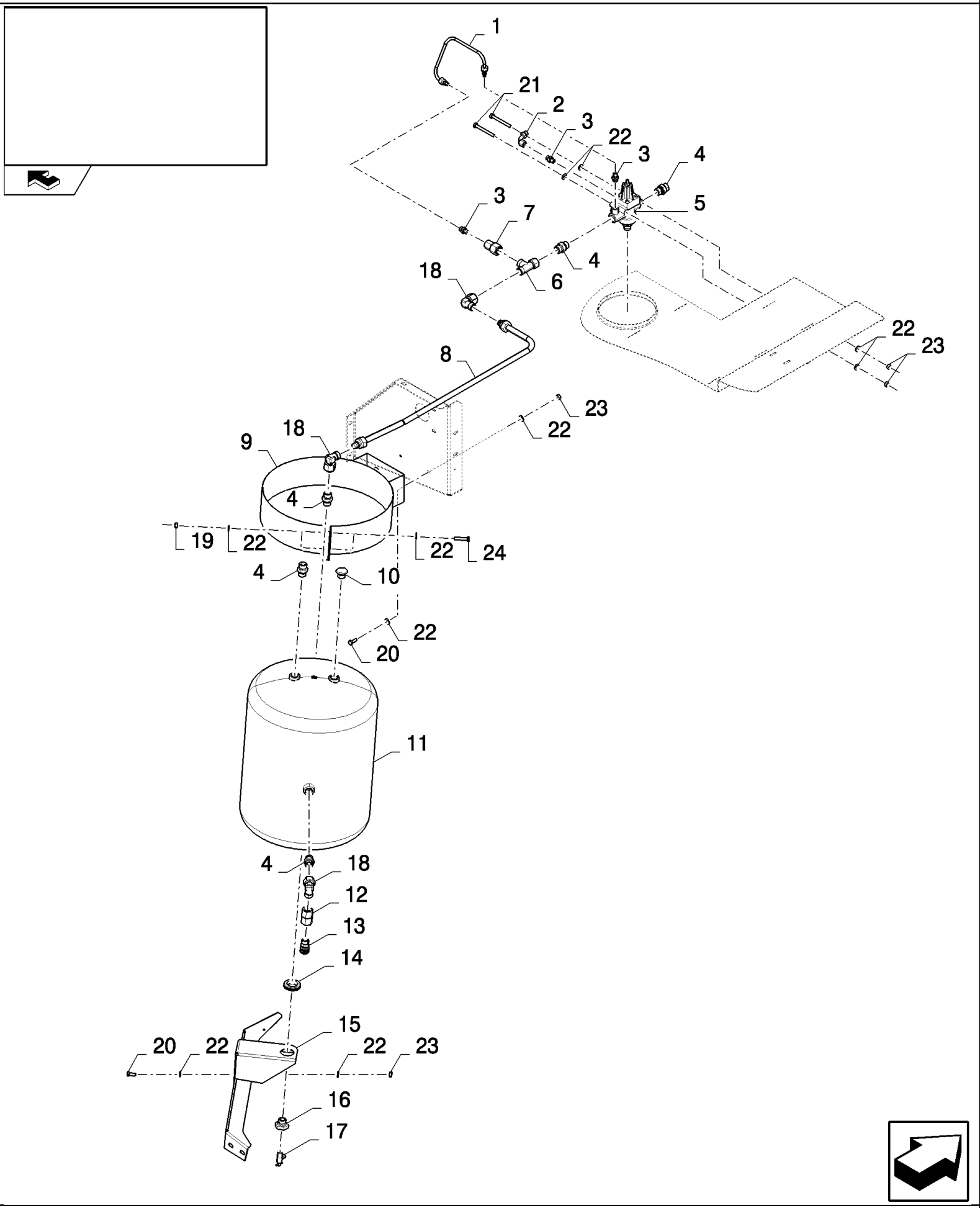

CSX7080 C659 - COMBINE (9/06-8/08)

02.222(B 01) BLOW-OFF SYSTEM, AIR RESERVOIR

ссылка	Номер детали	Кол-во	Описание
1	87523412	1	PIPE, VENTILATION,
2	418283	1	ELBOW,
3	9513082	3	CONNECTOR, HYD.,
4	9516263	4	CONNECTOR, HYD.,
5	84440618	1	VALVE, PRESSURE RELIEF,
6	84042903	1	CONNECTOR, HYD.,
7	9838275	1	CONNECTOR, HYD.,
8	87540798	1	PIPE, VENTILATION,
9	87345148	1	SUPPORT,
10	84814963	1	CONNECTOR, HYD.,
11	84019044	1	RESERVOIR, AIR,
12	84433625	1	CONNECTOR, HYD.,
13	84043491	1	COUPLING, QUICK, MALE,
14	129959	1	GROMMET,
15	87542411	1	SUPPORT,
16	84019122	1	CONNECTOR, HYD.,
17	441031	1	DRAINCOCK/TAP, SUPPLY,
18	84440128	3	CONNECTOR, HYD.,
19	86629542	2	NUT, LOCK, M8 x 1.25, Cl 8,
20	120104	4	SCREW, Hex, M8 x 20, 8.8,
21	43133	2	SCREW, Hex, M8 x 80, 8.8,
22	322358	16	WASHER, SPRING, Belleville, M8,
23	9706690	6	NUT, M8, Cl 8,
24	43129	2	BOLT, Hex, M8 x 40, 8.8,

02.224(01) BLOW-OFF SYSTEM, AIR GUN

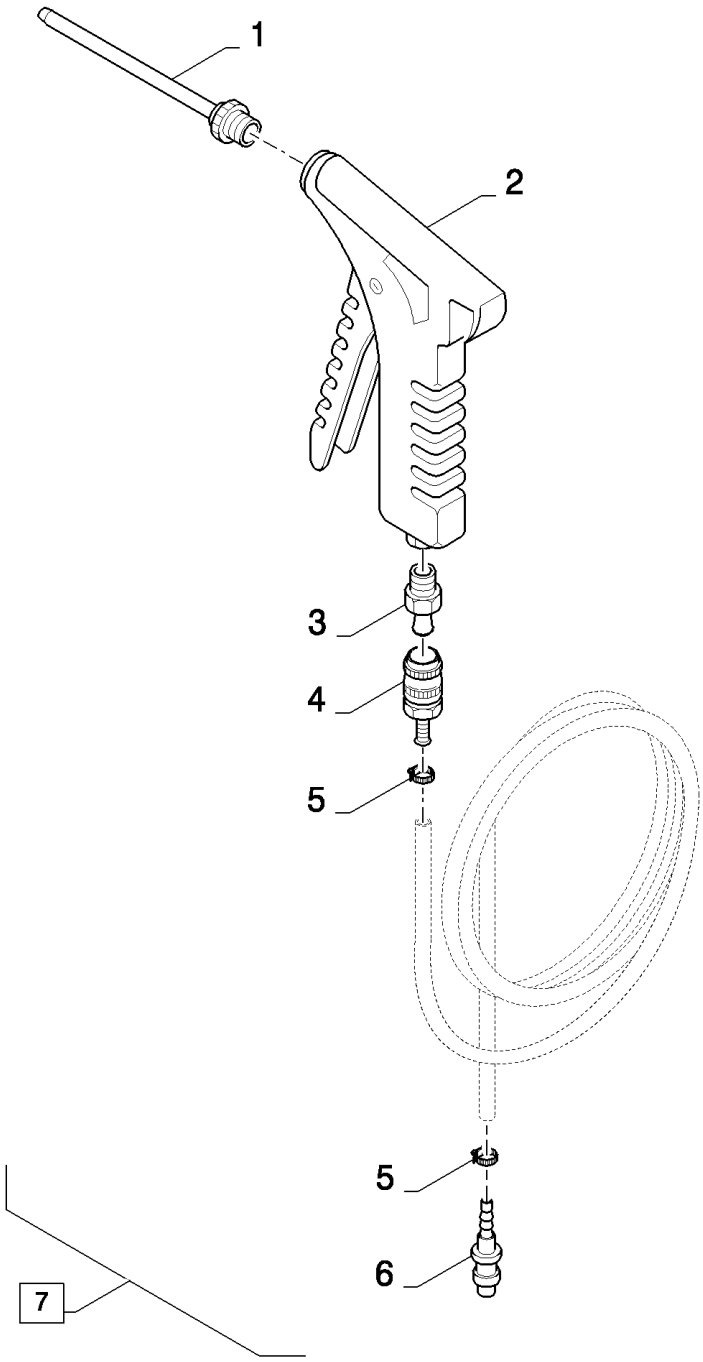

CSX7080 C659 - COMBINE (9/06-8/08)

02.224(01) BLOW-OFF SYSTEM, AIR GUN

ссылка	Номер детали	Кол-во	Описание
1	84043496	1	TUBE,
2	84043495	1	AIR GUN,
3	84043494	1	FITTING,
4	84043493	1	COUPLING, QUICK, MALE,
5	80150064	2	CLAMP,
6	84043492	1	FITTING,
7	84045084	1	HOSE, FLEXIBLE, (1 to 6)

02.225(A 01) COOLERS

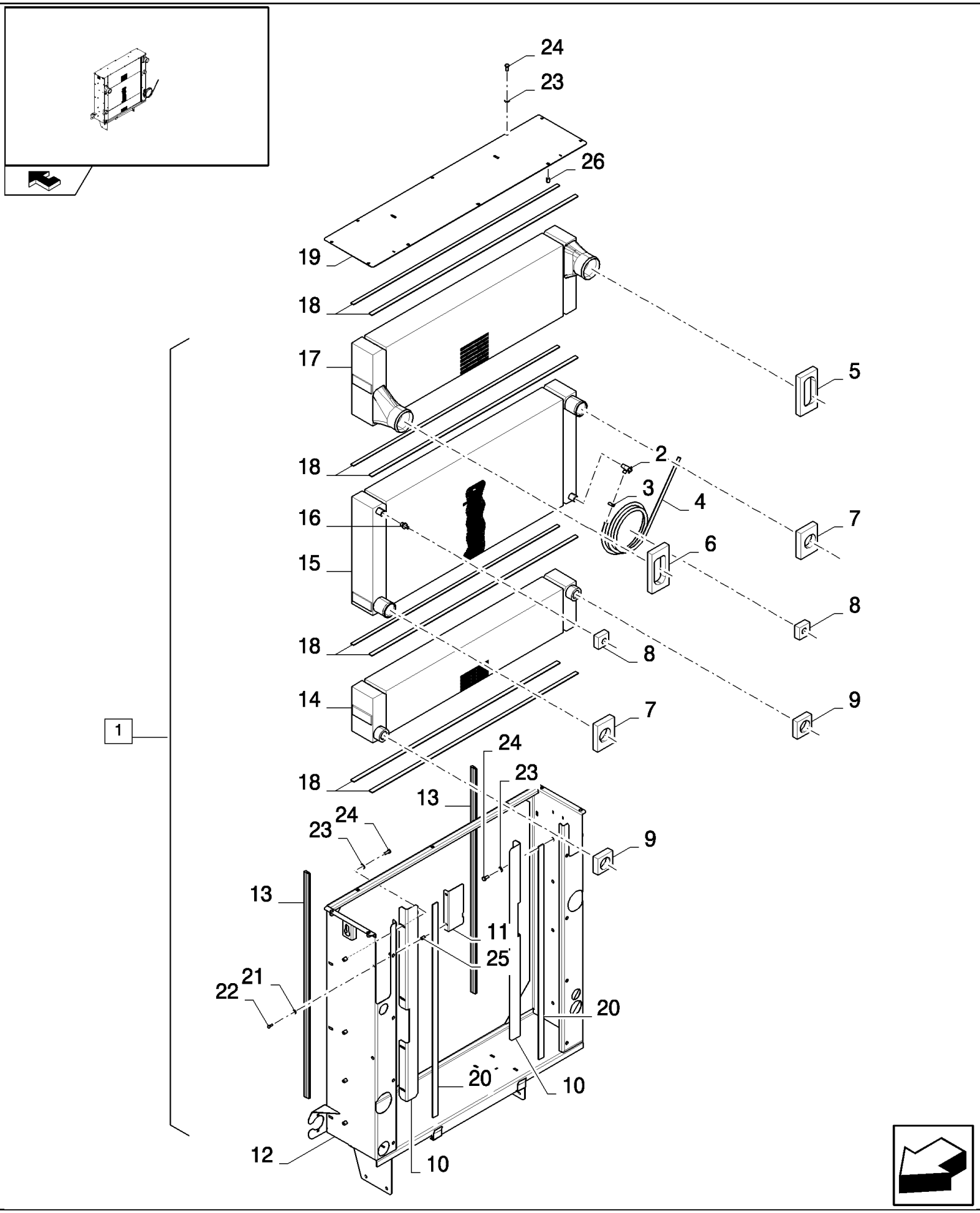

CSX7080 C659 - COMBINE (9/06-8/08)

02.225(A 01) COOLERS

ссылка	Номер детали	Кол-во	Описание
1	84457296	1	(2 to 26)
2	441031	1	DRAINCOCK/TAP, SUPPLY,
3	913888	1	CLAMP, HOSE,
4	400813	AR	HOSE, FLEXIBLE, L=3.5M
5	87318588	1	RUBBER,
6	87318589	1	RUBBER,
7	87318587	2	RUBBER,
8	87318590	2	RUBBER,
9	87318582	2	RUBBER,
10	87324165	2	PLATE,
11	87328773	1	PLATE,
12	87328450	1	FRAME,
13	87324720	AR	SEAL PROTECTION, L=2.08M
14	87331155	1	COOLER, OIL,
15	87328458	1	RADIATOR,
16	395779	1	CONNECTOR, HYD.,
17	87328459	1	INTERCOOLER,
18	400987	AR	SEAL, L=8.8M
19	87328461	1	PLATE,
20	401278	AR	SEAL, L=1.975M
21	322357	2	WASHER, SPRING, Belleville, M6,
22	86508568	2	SCREW, Hex, M6 x 16, 8.8,
23	322358	15	WASHER, SPRING, Belleville, M8,
24	120104	15	SCREW, Hex, M8 x 20, 8.8,
25	84983191	5	RIVET,
26	84983188	27	RIVET,

TRANSMISSION	**TRANSMISSION**	**TRANSMISION**	**TRANSMISSION**
TRANSMISSION	**TRANSMISSION**	**TRANSMISSÃO**	**TRANSMISSIE**

SEC. 3

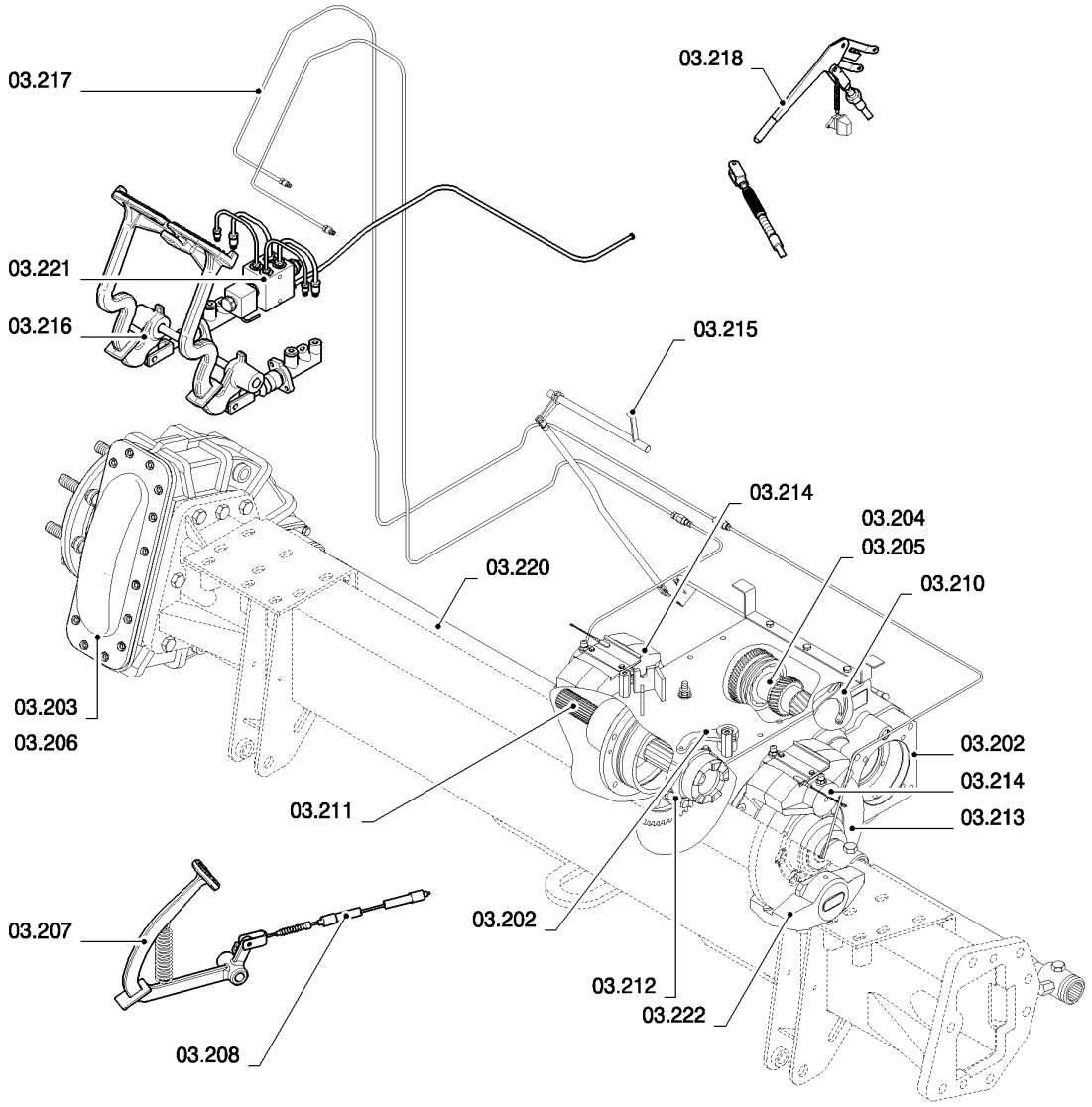

ссылка	Номер детали	Кол-во	Описание

TRANSMISSION	**TRANSMISSION**	**TRANSMISION**	**TRANSMISSION**
TRANSMISSION	**TRANSMISSION**	**TRANSMISSÃO**	**TRANSMISSIE**

SEC. 3

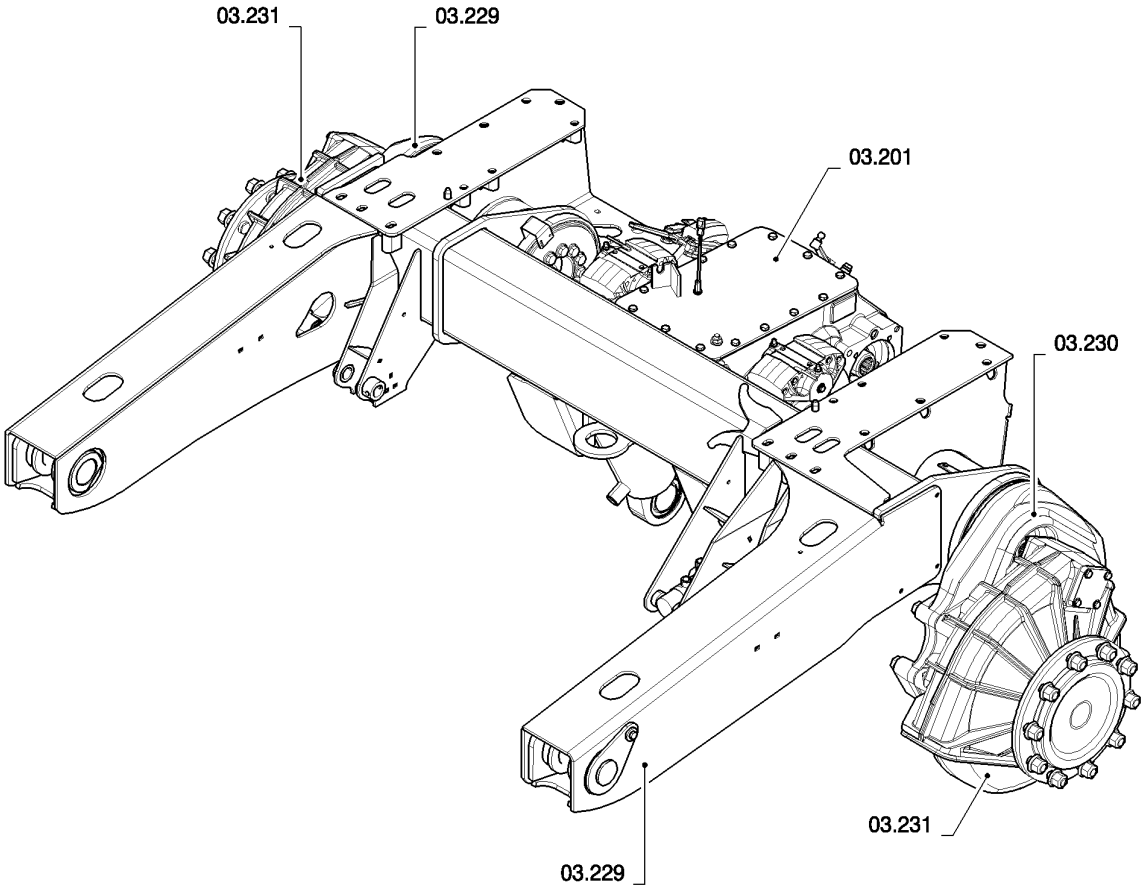

ссылка	Номер детали	Кол-во	Описание

03.201(B 01) COMPLETE TRACTION GEARBOX - D572

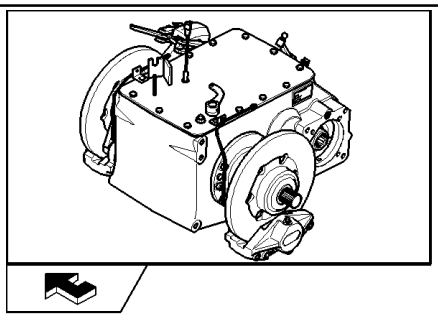

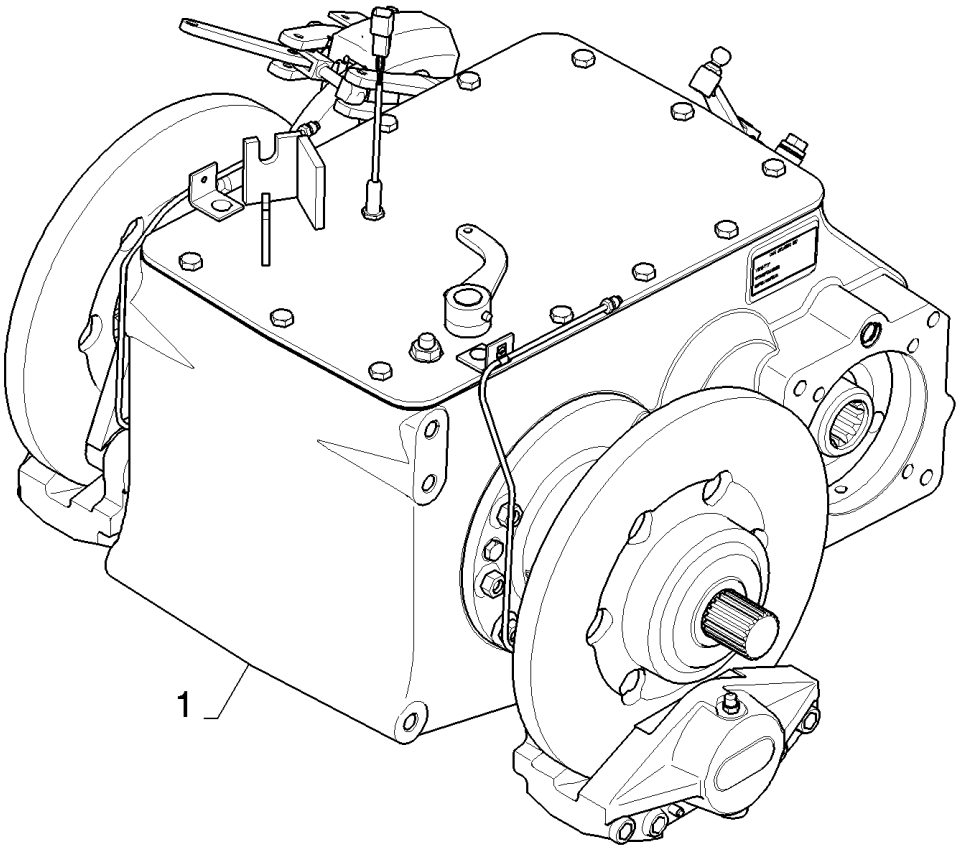

CSX7080 C659 - COMBINE (9/06-8/08)

03.201(B 01) COMPLETE TRACTION GEARBOX - D572

ссылка	Номер детали	Кол-во	Описание
1	87589949	1	TRANSMISSION, incl. Fig: 03.202; 204; 205; 210; 211; 212; 213; 214
1	87589958	1	TRANSMISSION, incl. Fig: 03.202; 204; 205; 210; 211; 212; 213; 214, WITH DIFF. LOCK

03.202(01) GEARBOX

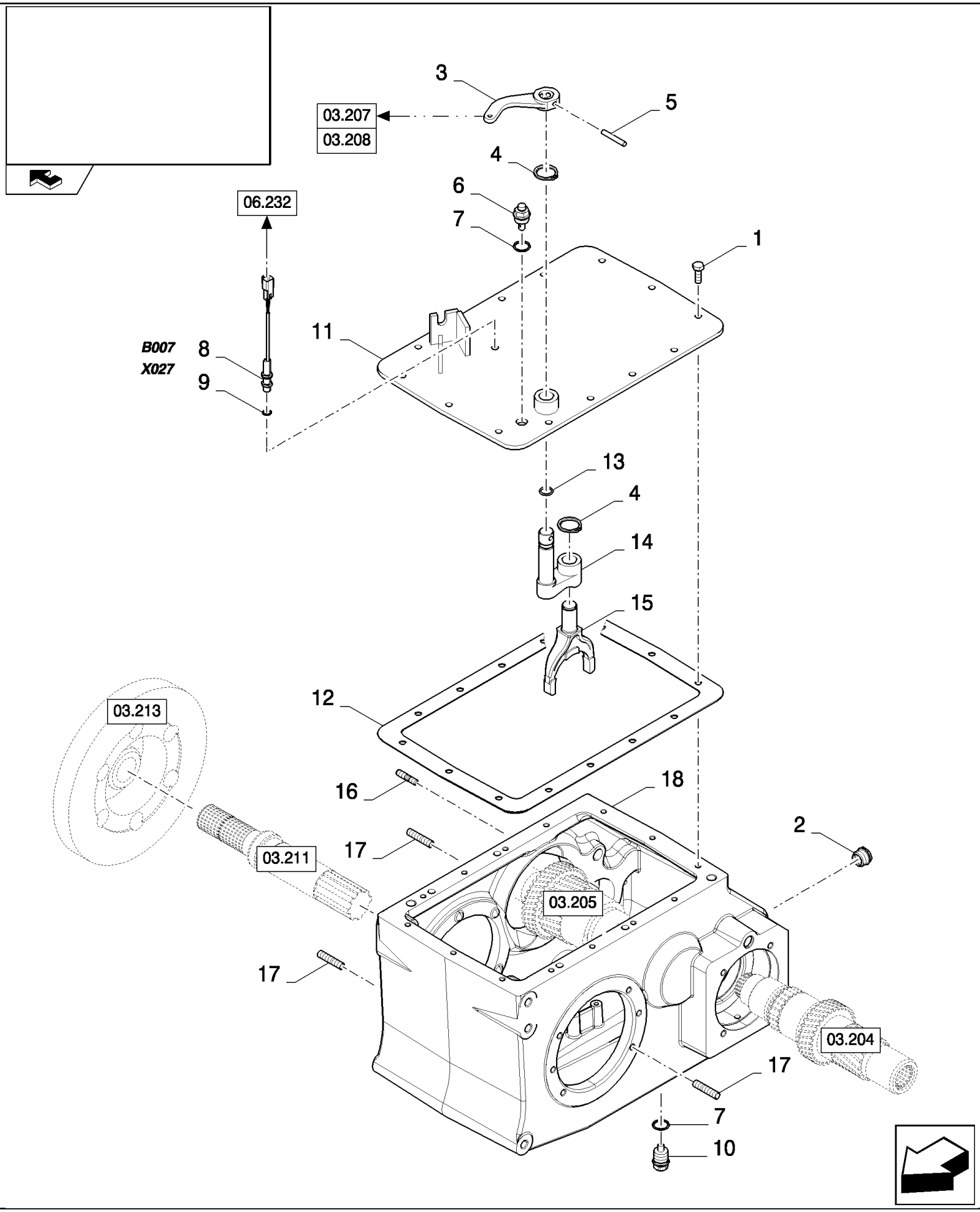

CSX7080 C659 - COMBINE (9/06-8/08)

03.202(01) GEARBOX

ссылка	Номер детали	Кол-во	Описание
1	412621	14	BOLT, Hex Lock, M10 x 30, 8.8, M10x30
2	84071596	1	LEVEL GAUGE CONTROL,
3	84334005	1	LEVER, , WITH DIFF. LOCK
4	370002	2	RING, SNAP, M25, Ext, , WITH DIFF. LOCK
5	9506888	1	PIN, , WITH DIFF. LOCK
6	398136	1	BREATHER,
7	220025	2	SEALRING,
8	84058860	1	SENSOR,
9	355607	1	SEALRING,
10	336897	1	PLUG,
11	84435988	1	COVER, , STANDARD
11	84437002	1	COVER, , WITH DIFF. LOCK
12	84071961	1	GASKET,
13	89818942	1	O-RING, , WITH DIFF. LOCK
14	9818945	1	INSERT, , WITH DIFF. LOCK
15	9818947	1	YOKE, , WITH DIFF. LOCK
16	110019	5	STUD,
17	350341	15	STUD,
18	84433056	1	HOUSING,

03.203(A 01) END REDUCTION 11/111

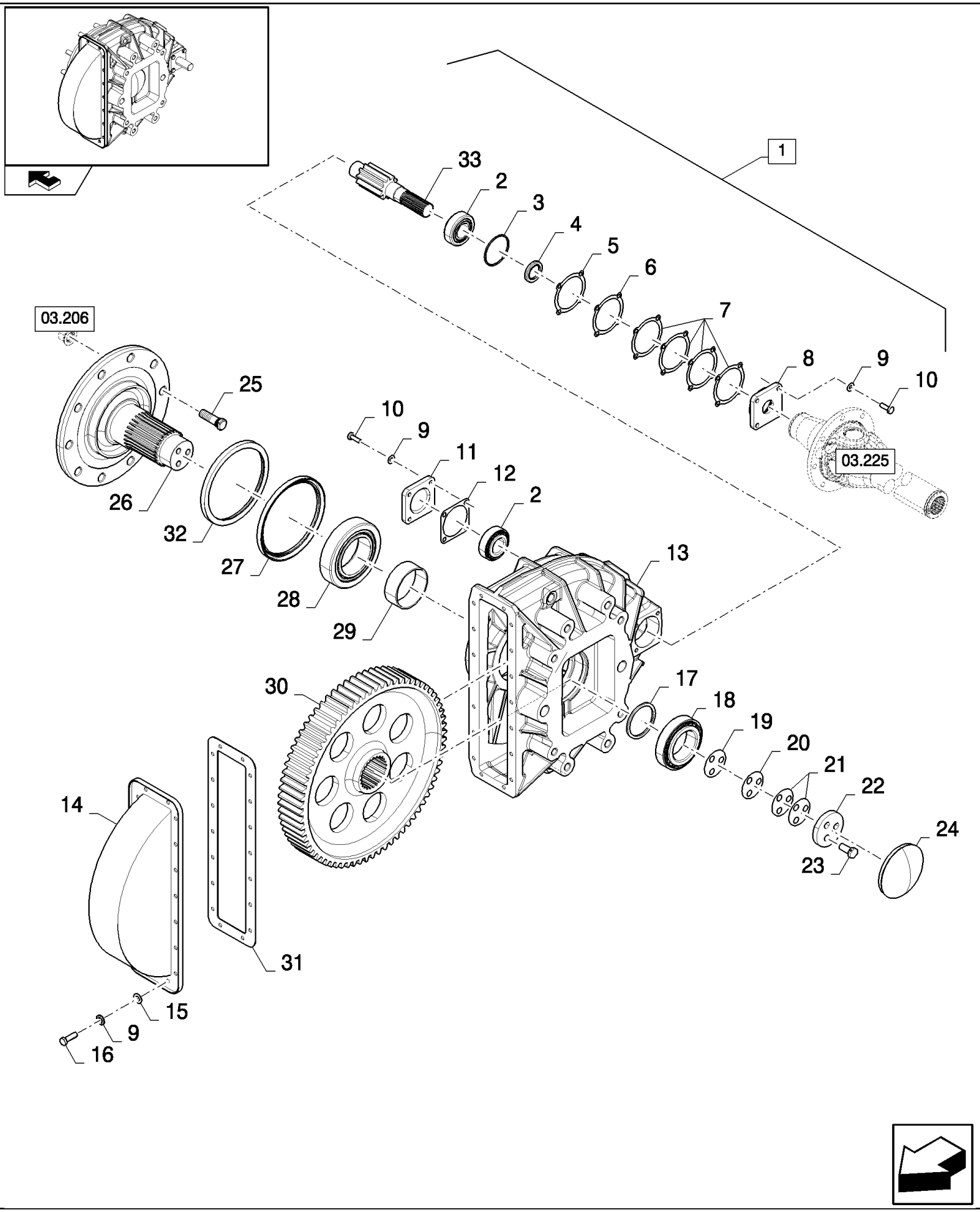

CSX7080 C659 - COMBINE (9/06-8/08)

03.203(A 01) END REDUCTION 11/111

ссылка	Номер детали	Кол-во	Описание
1	84817090	1	GEAR REDUCTION UNIT, , STANDARD
1	84817091	1	GEAR REDUCTION UNIT, , FOR MUDDY CONDITIONS ONLY
2	754567	2	BEARING, ROLLER, TAPERED,
3	913107	1	O-RING, -235, 70 Duro, 3.109" ID x .139" Thk,
4	66807	1	SEAL,
5	382950	1	SHIM, 0.5mm Thk,
6	382949	1	SHIM, THK : 0.2MM
7	382948	4	SHIM, 0.05mm Thk,
8	754516	1	FLANGE,
9	140045	26	WASHER, SPRING, Belleville, M10,
10	43140	8	BOLT, Hex, M10 x 30, 8.8, Full Thd,
11	613212	1	FLANGE,
12	410920	1	SEAL,
13	84442023	1	HOUSING, FINAL DRIVE, , STANDARD
13	84442133	1	HOUSING, FINAL DRIVE, , FOR MUDDY CONDITIONS ONLY
14	84074608	1	COVER,
15	743794	18	WASHER,
16	43138	18	SCREW, Hex, M10 x 20, 8.8, Full Thd,
17	613200	1	SPACER,
18	754565	1	BEARING, ROLLER, TAPERED,
19	395393	1	SHIM, 0.5mm Thk,
20	395392	1	SHIM, 0.2mm Thk,
21	395391	2	SHIM, 0.05mm Thk,
22	382503	1	FLANGE,
23	84443546	3	SCREW, M16x35
24	613201	1	COVER,
25	330291	10	BOLT,
26	87393056	1	FLANGE, , STANDARD
26	87393064	1	FLANGE, , FOR MUDDY CONDITIONS ONLY
27	9832264	1	SEAL, , STANDARD
27	9818670	1	RING, , FOR MUDDY CONDITIONS ONLY
28	86975648	1	BEARING, ROLLER, TAPERED,
29	84814999	1	SPACER,
30	751029	1	GEAR,
31	913369	1	GASKET,
32	9509555	1	SEAL, RUBBER, , FOR MUDDY CONDITIONS ONLY
33	751030	1	SHAFT,

03.204(01) GEARBOX, INPUT SHAFT

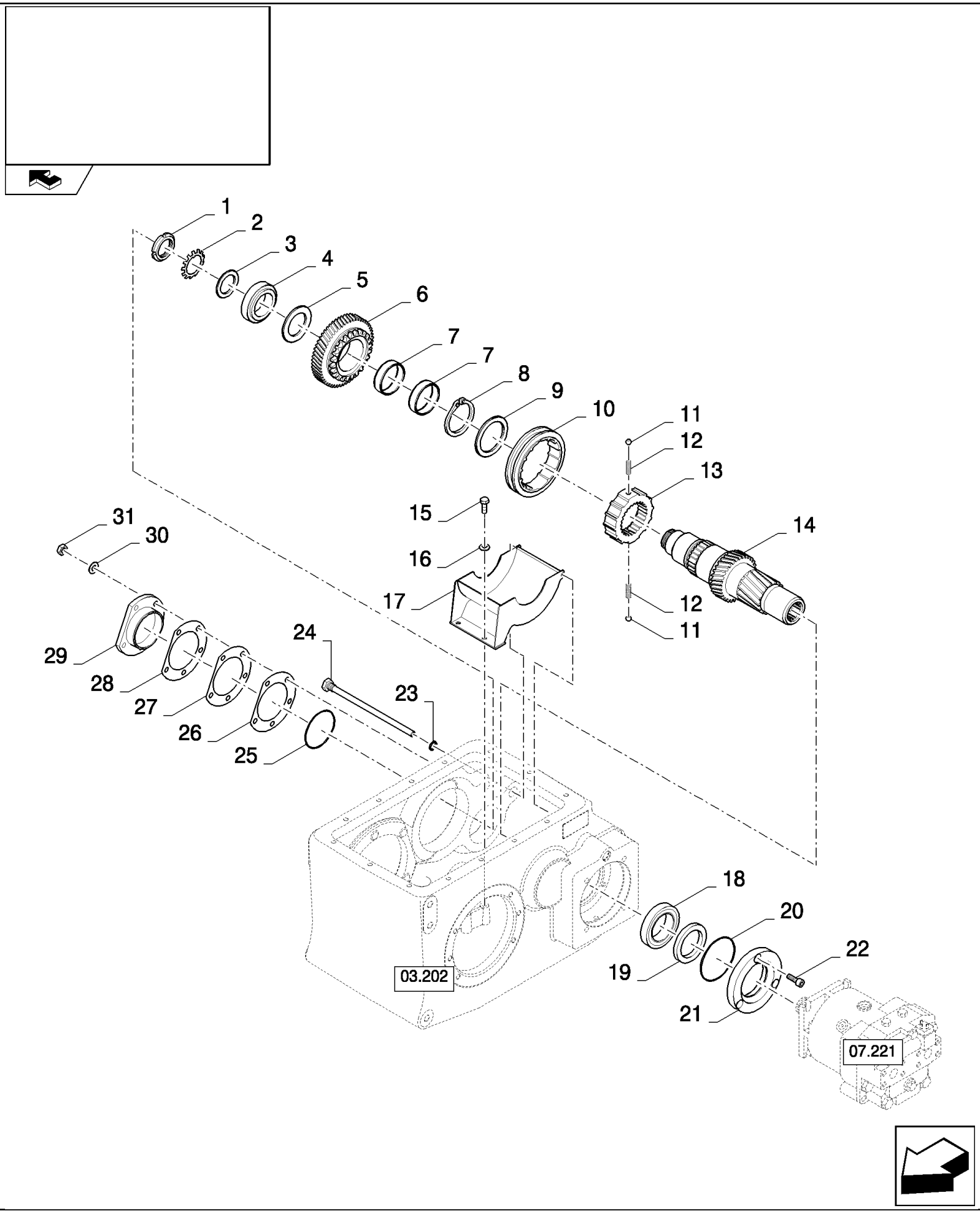

CSX7080 C659 - COMBINE (9/06-8/08)

03.204(01) GEARBOX, INPUT SHAFT

ссылка	Номер детали	Кол-во	Описание
1	9615771	1	NUT, LOCK, M45 x 1.5, Bearing, M45x1.5
2	80410880	1	RING, LOCKING,
3	84071395	1	WASHER, THRUST,
4	853116	1	BEARING ASSY,
5	84071394	1	WASHER, THRUST,
6	84433273	1	GEAR,
7	87317816	1	BEARING SET,
8	84078051	1	RING, SNAP, M72, Ext,
9	84072052	1	WASHER, THRUST,
10	84433358	1	GEAR,
11	84041521	2	BALL,
12	84041522	2	SPRING,
13	84433352	1	GEAR,
14	84071392	1	SHAFT,
15	120103	2	BOLT, Hex, M8 x 16, 8.8,
16	322358	2	WASHER, SPRING, Belleville, M8,
17	84435240	1	SHIELD,
18	750347	1	BEARING, ROLLER,
19	84045429	1	SEALRING,
20	84032297	1	O-RING,
21	84071648	1	HOUSING, BEARING,
22	300442	3	SCREW, Hex Soc Hd, M10 x 30, 8.8,
23	84011379	1	SEALRING,
24	84334964	1	SET SCREW, Hex Soc, M12 x 205,
25	84078053	1	O-RING,
26	84072110	1	SHIM,
27	84072113	AR	SHIM,
28	84072114	AR	SHIM,
29	84071116	1	HOUSING, BEARING,
30	140045	5	WASHER, SPRING, Belleville, M10,
31	100016	5	NUT, M10, Cl 8,

03.205(01) GEARBOX, DRIVE SHAFT

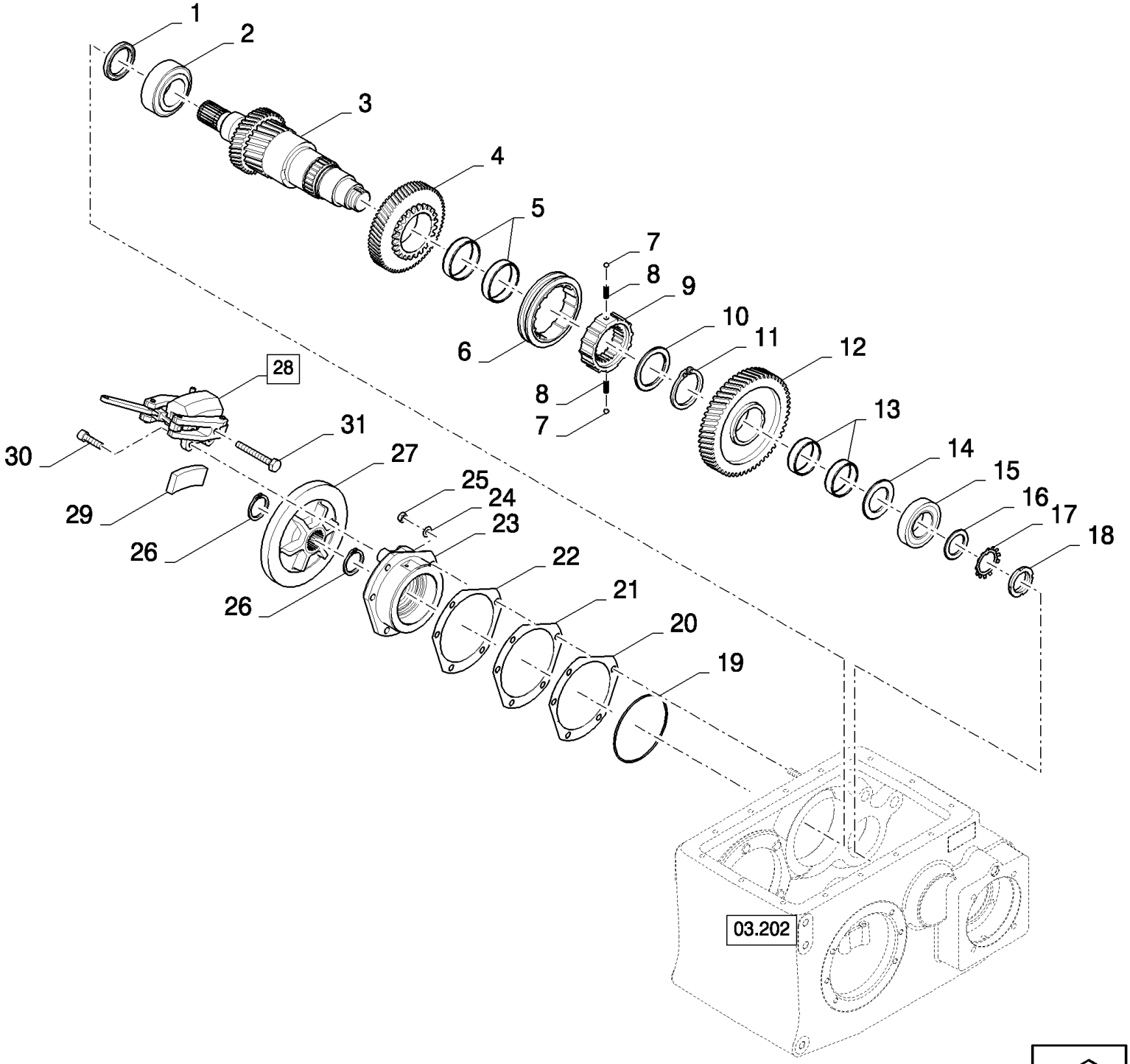

CSX7080 C659 - COMBINE (9/06-8/08)

03.205(01) GEARBOX, DRIVE SHAFT

ссылка	Номер детали	Кол-во	Описание
1	84017986	1	SEALRING,
2	84074759	1	BEARING, ROLLER, TAPERED,
3	84437033	1	SHAFT, GEAR, 16T
3	84441799	1	SHAFT, GEAR, 18T
4	84433264	1	GEAR,
5	84071622	1	BEARING SET,
6	84433358	1	GEAR,
7	84041521	2	BALL,
8	84041522	2	SPRING,
9	84433352	1	GEAR,
10	84072052	1	WASHER, THRUST,
11	84078051	1	RING, SNAP, M72, Ext,
12	84459182	1	GEAR,
13	87317816	1	BEARING SET,
14	84071394	1	WASHER, THRUST,
15	84320593	1	BEARING, ROLLER, TAPERED,
16	84071395	1	WASHER, THRUST,
17	80410880	1	RING, LOCKING,
18	9615771	1	NUT, LOCK, M45 x 1.5, Bearing, M45x1.5
19	84078052	1	O-RING,
20	84334234	1	SHIM,
21	84334235	AR	SHIM,
22	84334236	AR	SHIM,
23	84432905	1	HOUSING, BEARING,
24	140046	5	WASHER, Belleville, M12,
25	9706685	5	NUT, M12, Cl 8,
26	370007	2	RING, SNAP, M45, Ext,
27	84432996	1	BRAKE DISC,
28	9819715	1	BRAKE, (29)
29	9819908	2	BRAKE LINING,
30	9832986	2	SCREW, M10x30
31	86642435	1	BOLT, Hex, M12 x 1.25 x 45, 8.8, Full Thd,

03.206(01) END REDUCTION 10/75 - 11/111

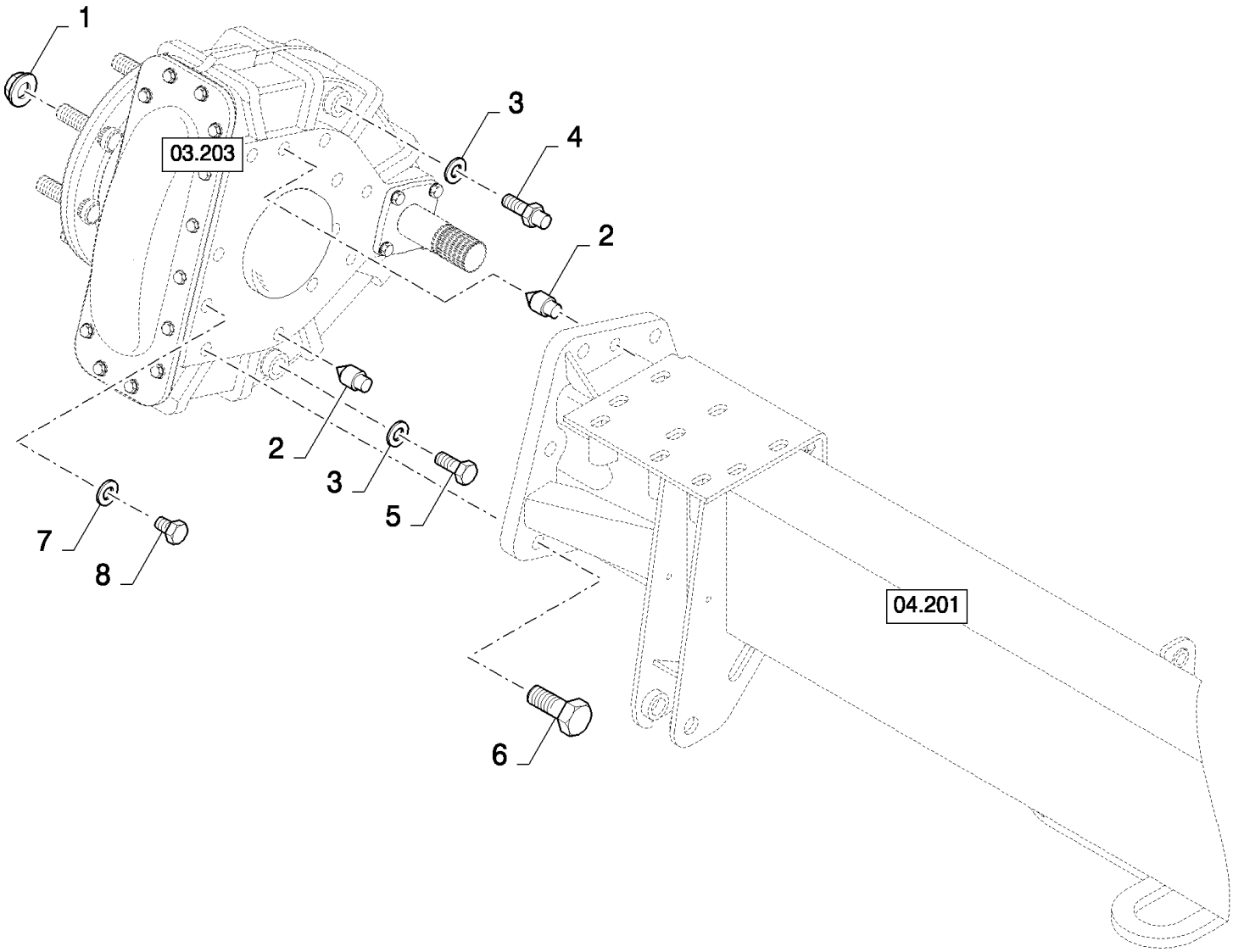

CSX7080 C659 - COMBINE (9/06-8/08)

03.206(01) END REDUCTION 10/75 - 11/111

ссылка	Номер детали	Кол-во	Описание
1	748961	16	NUT, M22x1.5, 10/75
1	748961	20	NUT, , 11/111
2	918737	4	PIN, , 10/75
2	626826	4	PIN, , 11/111
3	220025	4	SEALRING,
4	386287	2	BREATHER,
5	336897	2	PLUG,
6	9843590	14	BOLT, Hex, M20 x 50, 10.9, , 10/75
6	9843495	16	SCREW, Hex, M20 x 60, 10.9, , 11/111
7	9511034	4	GASKET, , 11/111
8	412413	4	PLUG, , 11/111

03.207(01) DIFFERENTIAL LOCK CONTROL

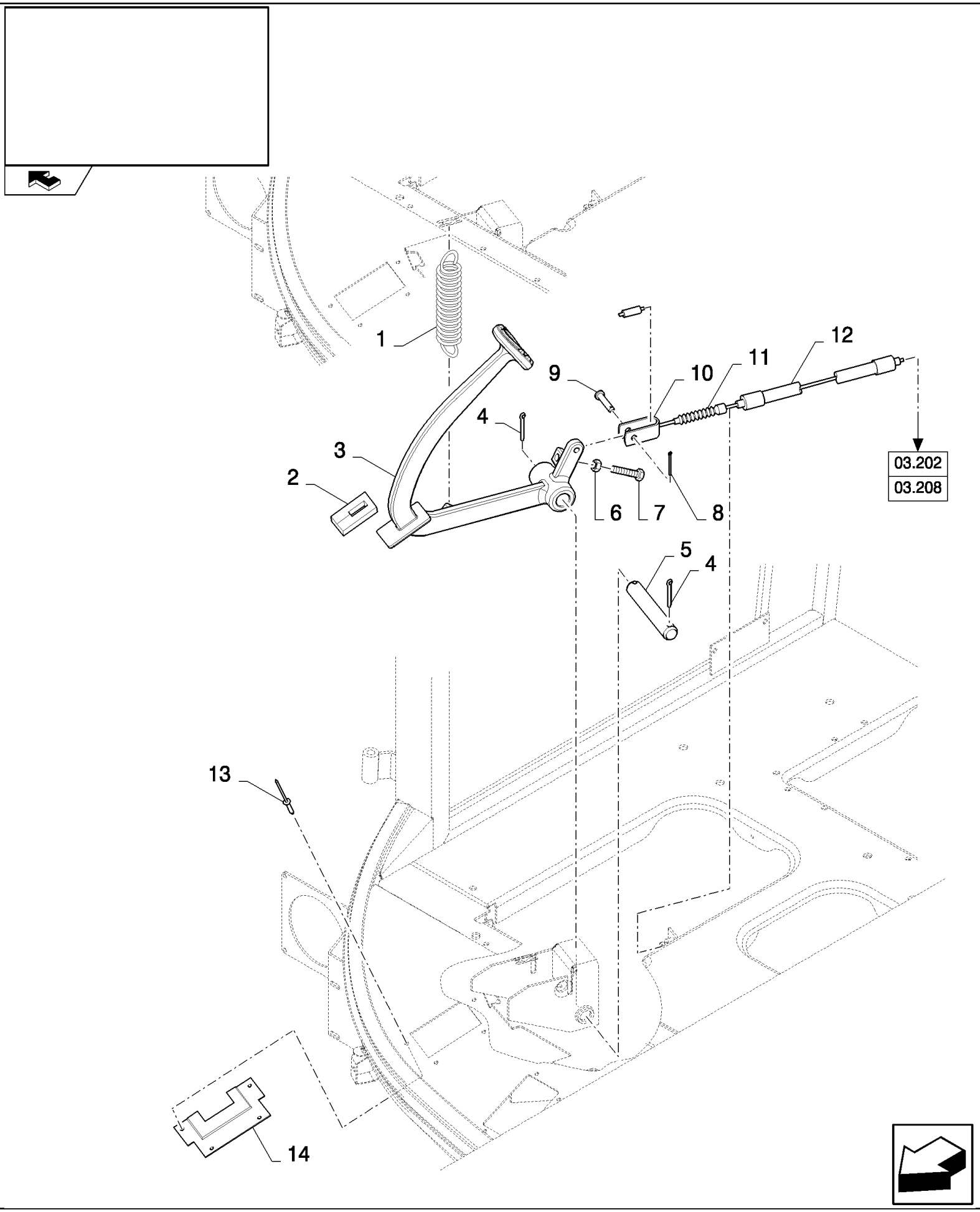

03.207(01) DIFFERENTIAL LOCK CONTROL

ссылка	Номер детали	Кол-во	Описание
1	9811656	1	SPRING,
2	89839853	1	ELEMENT, SEALING,
3	84807196	1	PEDAL,
4	412685	2	PIN, SPLIT (COTTER), M4 x 32,
5	390066	1	PIN,
6	9706690	1	NUT, M8, Cl 8,
7	43128	1	BOLT, Hex, M8 x 30, 8.8,
8	86977785	1	PIN, SPLIT (COTTER), M1.6 x 20,
9	376876	1	PIN, CLEVIS, M6 x 30,
10	388340	1	YOKE,
11	427705	1	COVER,
12	9503174	1	CABLE,
13	425519	4	RIVET,
14	9819825	1	COVER,

03.208(01) DIFFERENTIAL LOCK CONTROL

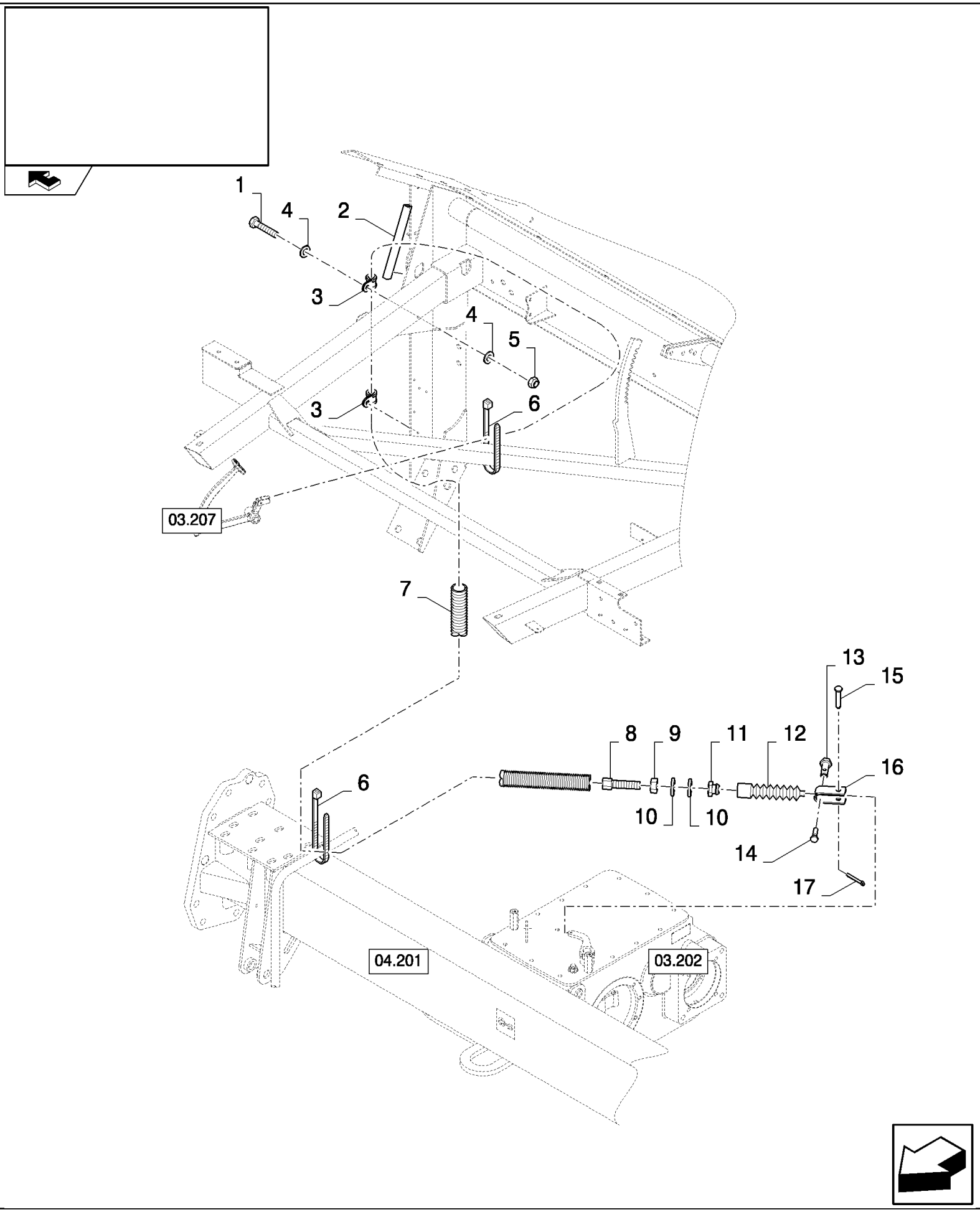

CSX7080 C659 - COMBINE (9/06-8/08)

03.208(01) DIFFERENTIAL LOCK CONTROL

ссылка	Номер детали	Кол-во	Описание
1	43117	2	BOLT, Hex, M6 x 30, 8.8,
2	NS	1	NOT SERVICED, L=0.12M
3	431352	2	CLAMP,
4	140040	2	WASHER, M6 x 22 x 2,
5	412152	2	NUT, LOCK, M6 x 1, Cl 8.8,
6	9818147	2	CLAMP,
7	NS	1	NOT SERVICED, L=0.6M
8	449469	1	SCREW,
9	100016	1	NUT, M10, Cl 8,
10	394629	2	WASHER, LOCK,
11	449470	1	NUT,
12	9818291	1	BELLOWS,
13	381140	1	CLAMP,
14	120100	1	BOLT, Hex, M6 x 20, 8.8,
15	376876	1	PIN, CLEVIS, M6 x 30,
16	388340	1	YOKE,
17	86977785	1	PIN, SPLIT (COTTER), M1.6 x 20,

03.210(01) GEARBOX, GEARSHIFT CONTROL

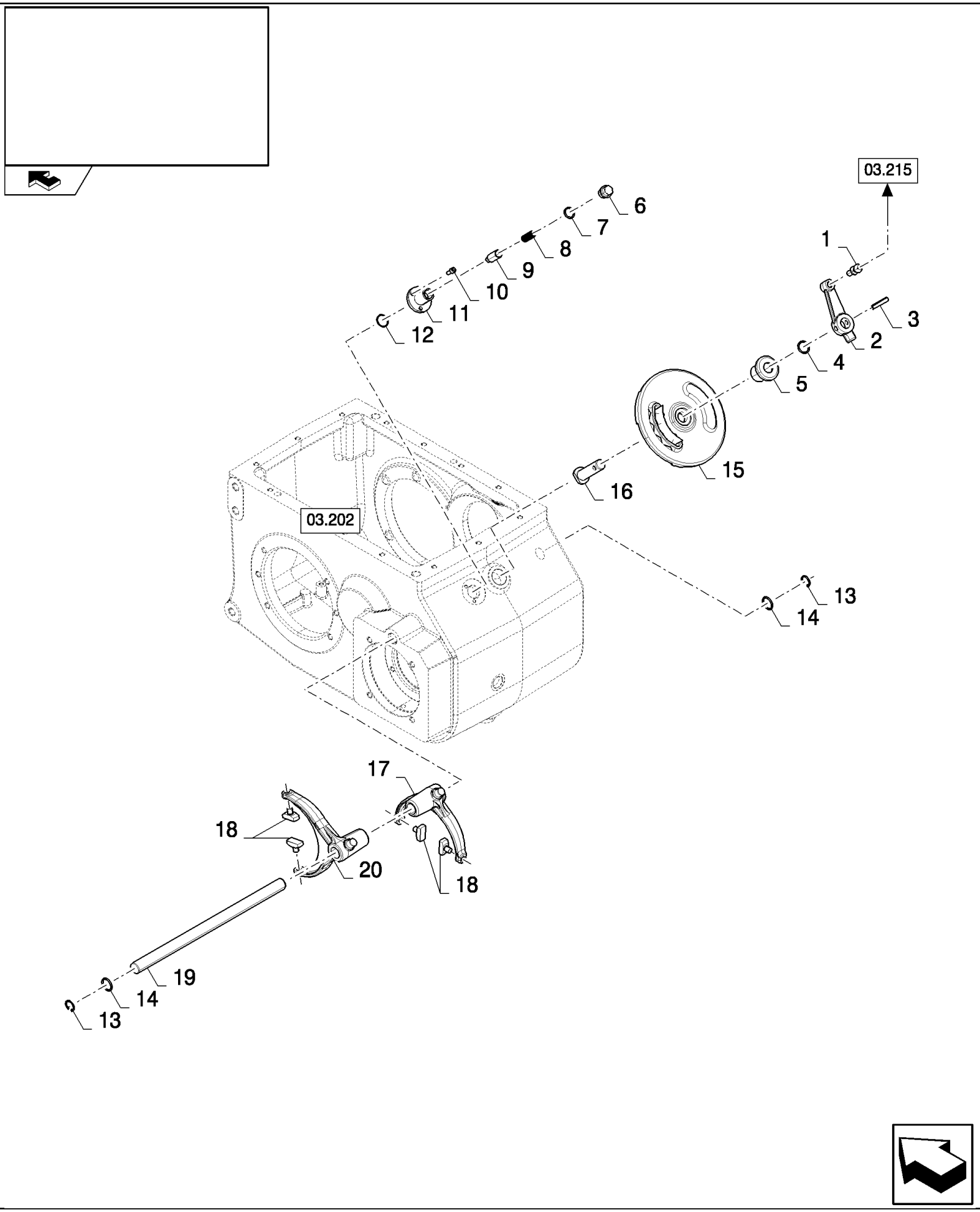

CSX7080 C659 - COMBINE (9/06-8/08)

03.210(01) GEARBOX, GEARSHIFT CONTROL

ссылка	Номер детали	Кол-во	Описание
1	9831211	1	JOINT, UNIVERSAL,
2	84432945	1	LEVER,
3	86548577	1	PIN, M8 x 40, Slotted,
4	304967	1	O-RING,
5	84071821	1	INSERT, THREADED,
6	150060	1	PLUG,
7	9511034	1	GASKET,
8	180012	1	SPRING,
9	84077004	1	PIN,
10	84058583	3	SCREW, M6x16
11	84437357	1	BUSHING,
12	84077101	1	O-RING,
13	84078050	2	RING, SNAP, M22, Int,
14	86629585	2	O-RING, -118, 70 Duro, .862" ID x .103" Thk,
15	84076817	1	DISC,
16	84076955	1	SHAFT,
17	84071587	1	FORK, SHIFTER,
18	84432249	4	GUIDE,
19	84071538	1	SHAFT,
20	84071378	1	FORK, SHIFTER,

03.211(A 01) GEARBOX, DRIVEN SHAFT

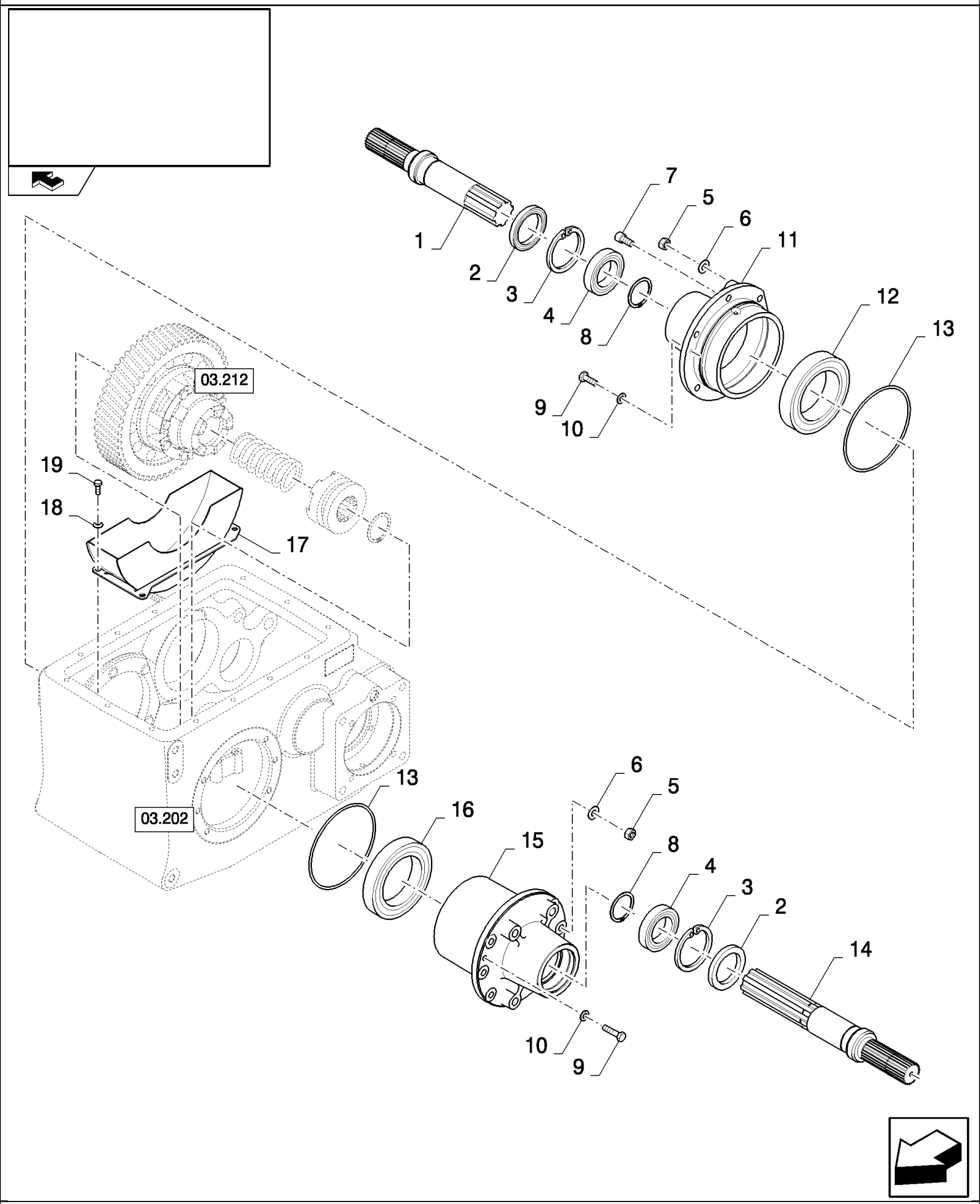

CSX7080 C659 - COMBINE (9/06-8/08)

03.211(A 01) GEARBOX, DRIVEN SHAFT

ссылка	Номер детали	Кол-во	Описание
1	84069687	1	SHAFT,
2	84045429	2	SEALRING,
3	370013	2	RING, SNAP, M90, Int,
4	9825886	2	BEARING ASSY,
5	9706685	10	NUT, M12, Cl 8,
6	140046	10	WASHER, Belleville, M12,
7	9837786	2	SCREW, Hex Soc Hd, M12 x 20, 8.8,
8	327911	2	CIRCLIP,
9	86512298	4	BOLT, Hex, M10 x 12, 8.8, Full Thd,
10	140045	4	WASHER, SPRING, Belleville, M10,
11	84071109	1	FLANGE,
12	210046	1	BEARING, BALL,
13	9815655	2	O-RING,
14	84069822	1	SHAFT, , STANDARD
14	84069688	1	SHAFT, , WITH DIFF. LOCK
15	84071206	1	FLANGE,
16	418831	1	BEARING ASSY,
17	84435237	1	SHIELD,
18	322358	4	WASHER, SPRING, Belleville, M8,
19	120103	4	BOLT, Hex, M8 x 16, 8.8,

03.212(A 01) DIFFERENTIAL, RATIO 18/71

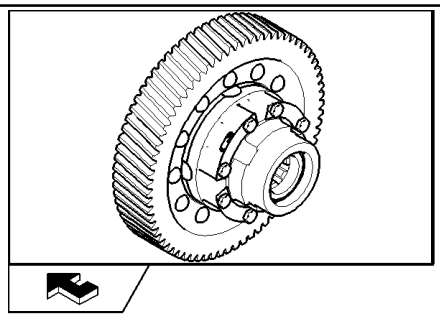

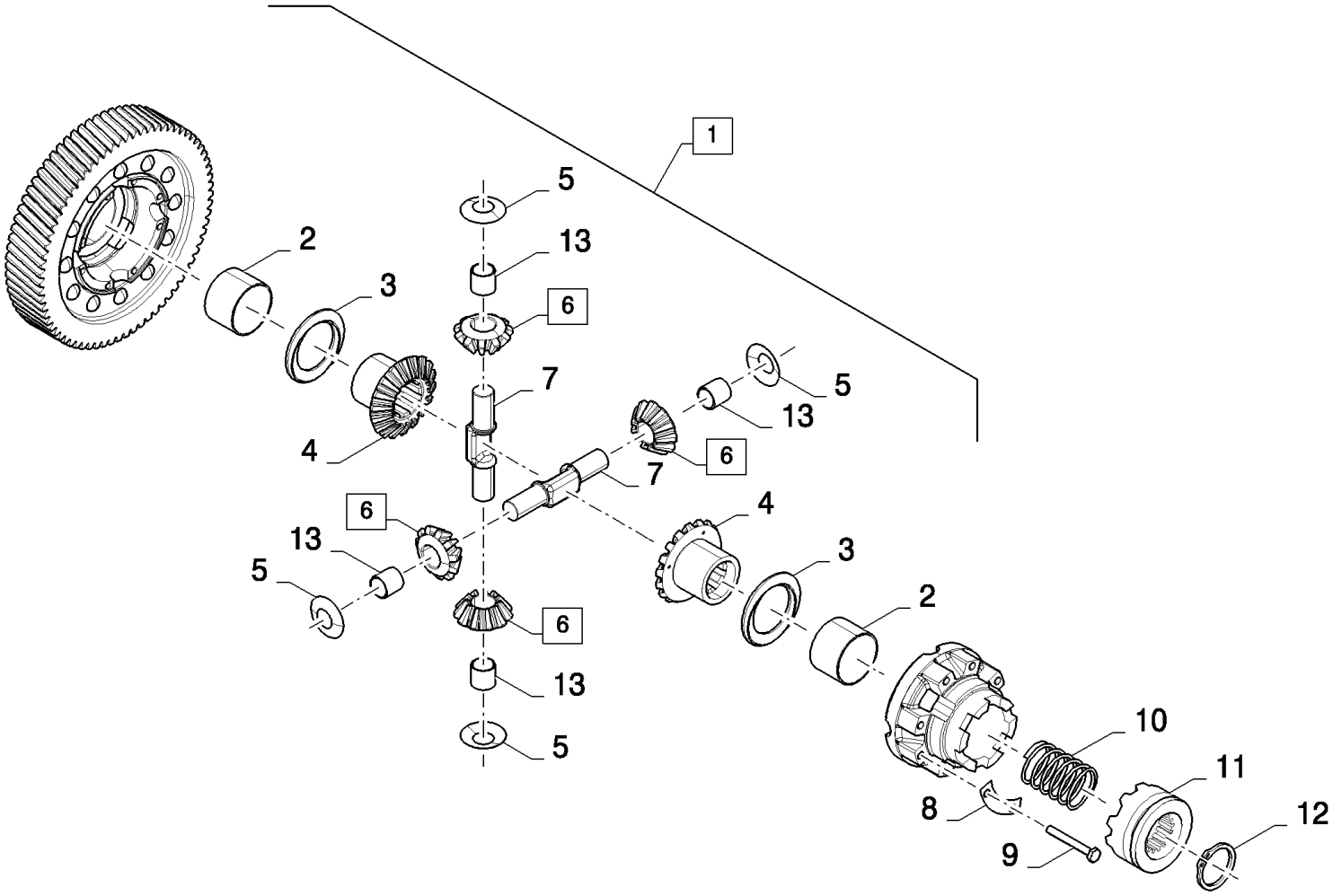

CSX7080 C659 - COMBINE (9/06-8/08)

03.212(A 01) DIFFERENTIAL, RATIO 18/71

ссылка	Номер детали	Кол-во	Описание
1	84071409	1	DIFFERENTIAL, (2 to 9), STANDARD
1	84071413	1	DIFFERENTIAL, (2 to 9), WITH DIFF. LOCK
2	9514039	2	SLEEVE,
3	210013	2	WASHER, THRUST,
4	9514042	2	SPROCKET, DRIVEN,
5	210014	4	WASHER,
6	9850394	4	GEAR, (13)
7	9514041	2	SHAFT,
8	331649	4	PLATE, LOCKING,
9	120073	8	BOLT, Hex, M10 x 80, 8.8,
10	455097	1	SPRING, , WITH DIFF. LOCK
11	455094	1	RING, COUPLING, , WITH DIFF. LOCK
12	327911	1	CIRCLIP, , WITH DIFF. LOCK
13	9514038	1	GEAR,

03.213(01) BRAKE DISCS

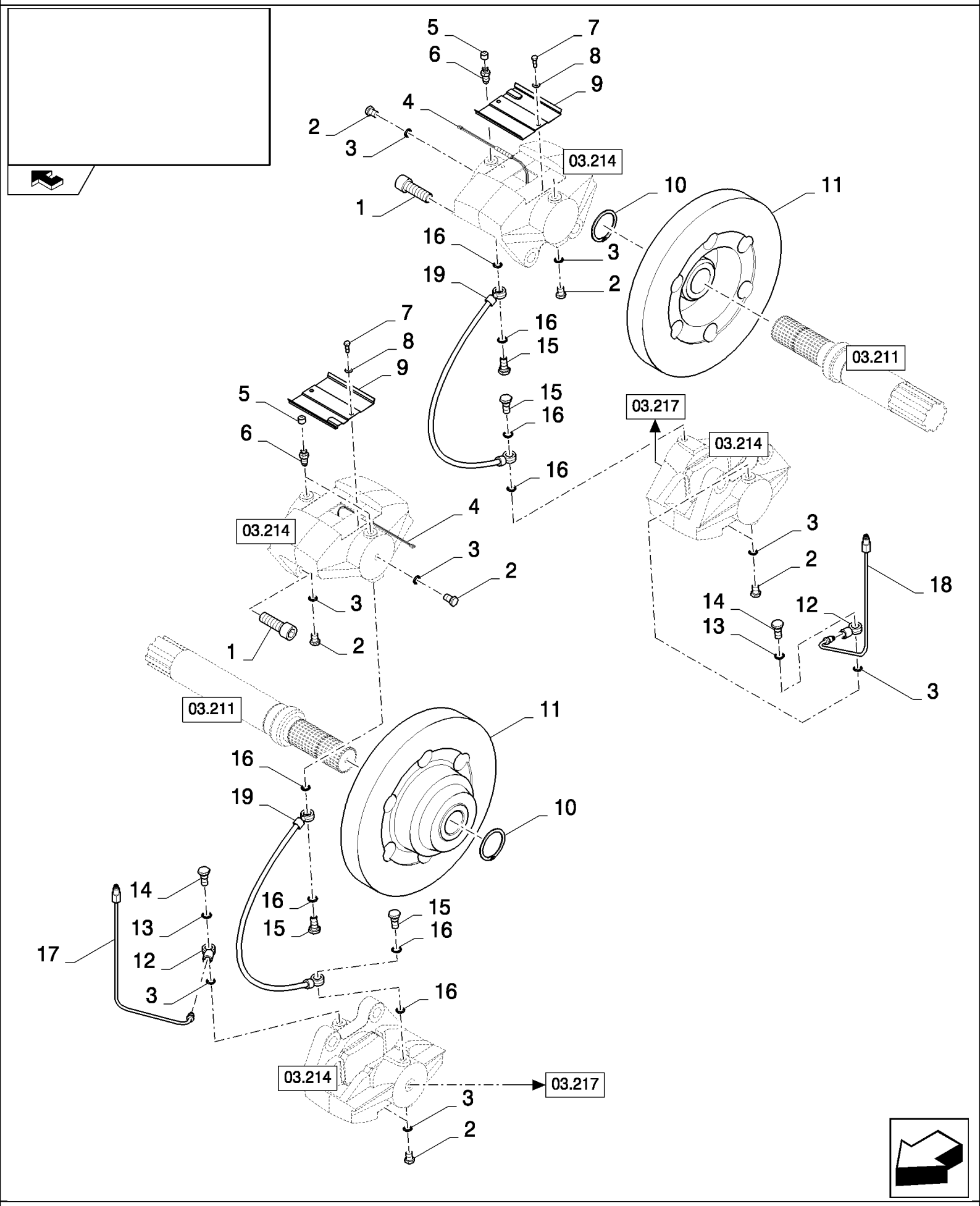

CSX7080 C659 - COMBINE (9/06-8/08)

03.213(01) BRAKE DISCS

ссылка	Номер детали	Кол-во	Описание
1	9817243	8	SCREW, Hex Soc Hd, M16 x 50, 12.9, Cap, HS, CL 12.9, M16 x 2 x 50
2	9832307	8	PLUG,
3	84439102	10	WASHER, SEALING,
4	NS	AR	NOT SERVICED, L=0.1M
5	9835349	4	CAP,
6	9832308	4	PLUG,
7	300806	4	SCREW, Hex, M5 x 10, 8.8, Full Thd,
8	322356	4	WASHER, 5MM
9	84004317	2	COVER,
10	370007	2	RING, SNAP, M45, Ext,
11	84071143	2	BRAKE DISC,
12	9832303	2	FITTING,
13	355607	2	SEALRING,
14	9832304	2	BOLT, BANJO,
15	84449205	4	SCREW, HOLLOW,
16	84449206	8	RING,
17	84989946	1	TUBE,
18	84989927	1	TUBE,
19	84447450	2	HOSE, FLEXIBLE,

03.214(01) BRAKE CALIPER

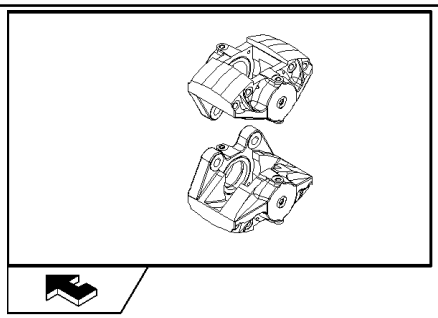

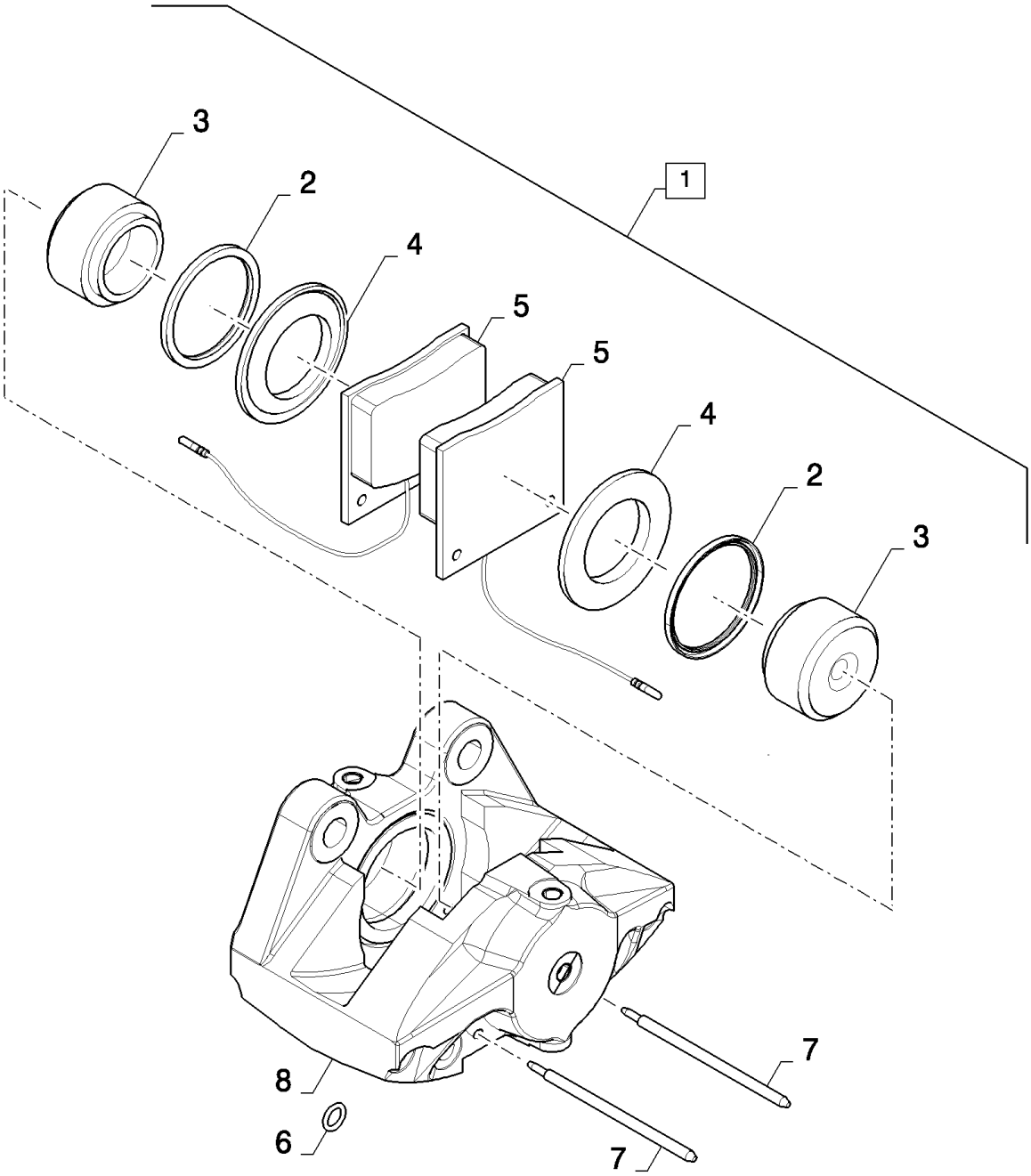

CSX7080 C659 - COMBINE (9/06-8/08)

03.214(01) BRAKE CALIPER

ссылка	Номер детали	Кол-во	Описание
1	84989455	1	BRAKE CALIPER, (2 to 8)
2	9835351	2	GASKET,
3	9850149	2	PISTON,
4	9835350	2	GASKET,
5	9832306	2	BRAKE, PAD,
6	9835353	1	O-RING,
7	9850148	2	PIN,
8	NSS	1	NOT SERVICED SEPARATELY,

03.215(B 01) GEARSHIFT CONTROL

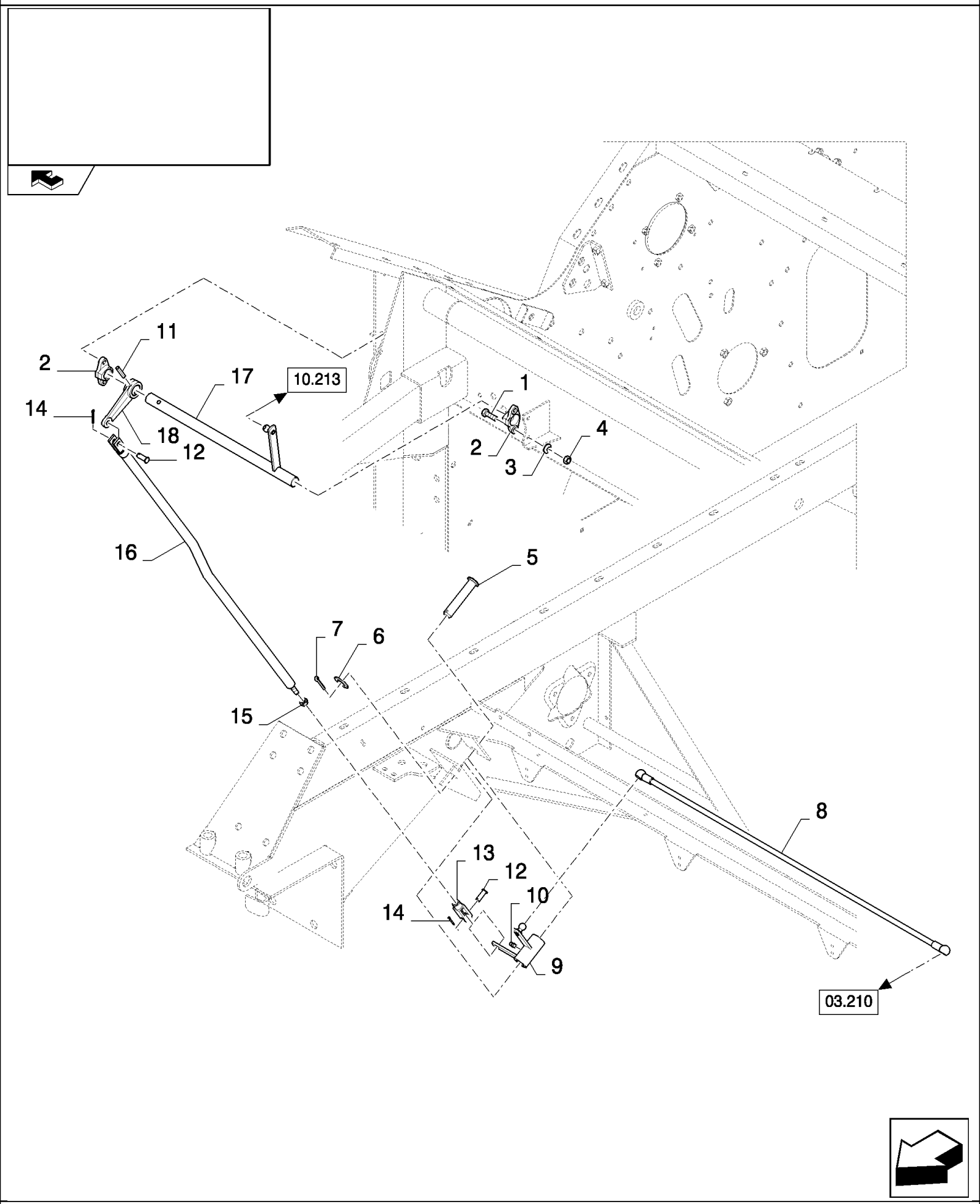

CSX7080 C659 - COMBINE (9/06-8/08)

03.215(B 01) GEARSHIFT CONTROL

ссылка	Номер детали	Кол-во	Описание
1	43127	4	BOLT, Hex, M8 x 25, 8.8,
2	84433018	2	HOUSING, BEARING,
3	322358	4	WASHER, SPRING, Belleville, M8,
4	9706690	4	NUT, M8, Cl 8,
5	9501786	1	RING,
6	378247	1	WASHER,
7	412686	1	PIN, SPLIT (COTTER), M5 x 32, , BSN C551
7	130011	1	PIN, SPLIT (COTTER), M5 x 40, , ASN D552
8	84432962	1	ROD, CONNECTING,
9	84432985	1	LEVER,
10	321204	1	NIPPLE, LUBE, M6 x 1, 16mm lg,
11	86548577	1	PIN, M8 x 40, Slotted,
12	322901	2	PIN,
13	412417	1	FORK,
14	130003	2	PIN, SPLIT (COTTER), M3.2 x 20,
15	100016	1	NUT, M10, Cl 8,
16	84433000	5	ROD, CONNECTING,
17	84433015	1	SHAFT,
18	84433013	1	LEVER,

03.215(C 01) GEARSHIFT CONTROL - FOR LATERALE ONLY

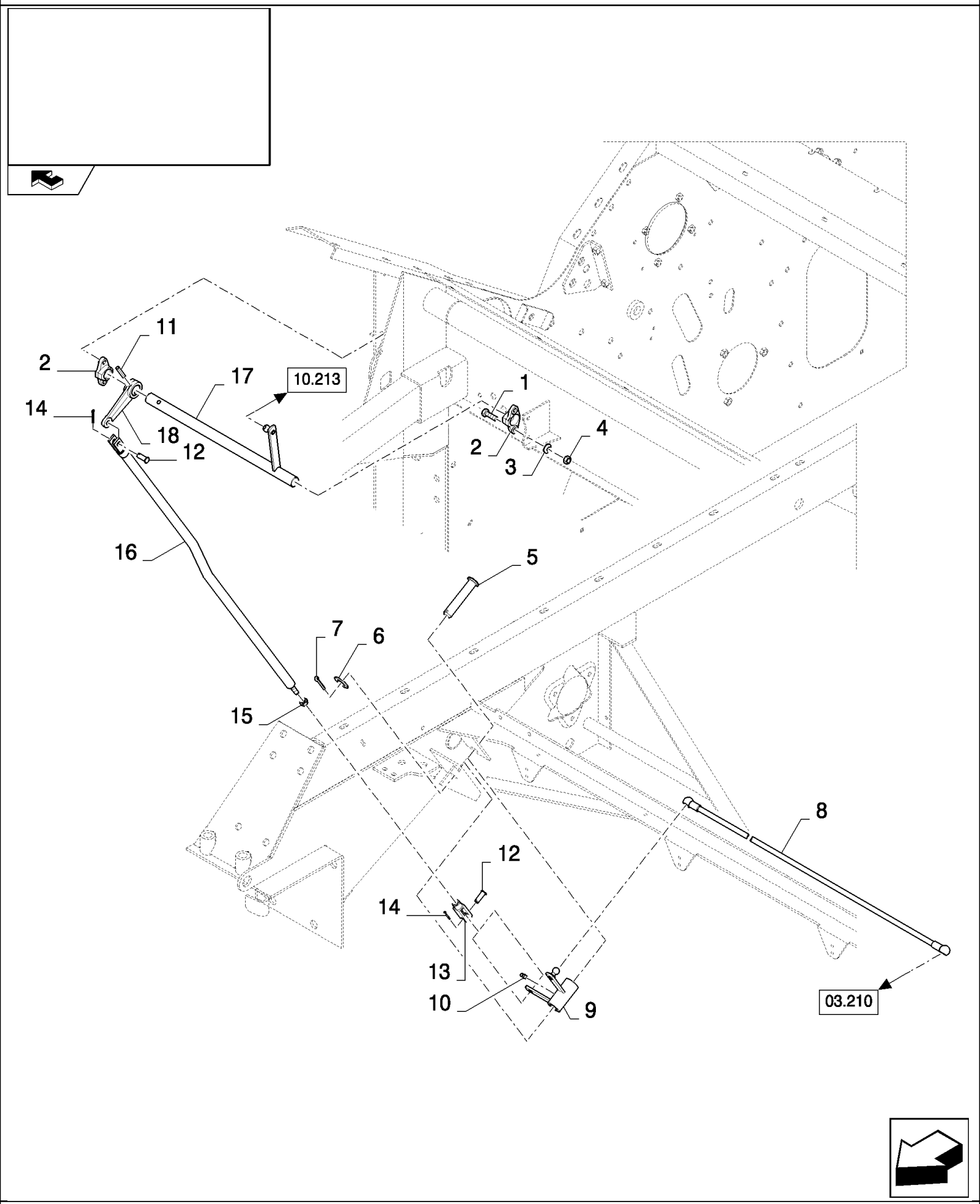

CSX7080 C659 - COMBINE (9/06-8/08)

03.215(C 01) GEARSHIFT CONTROL - FOR LATERALE ONLY

ссылка	Номер детали	Кол-во	Описание
1	43127	4	BOLT, Hex, M8 x 25, 8.8,
2	84433018	2	HOUSING, BEARING,
3	322358	4	WASHER, SPRING, Belleville, M8,
4	9706690	4	NUT, M8, Cl 8,
5	9501786	1	RING,
6	378247	1	WASHER, 20MM
7	412686	1	PIN, SPLIT (COTTER), M5 x 32, , BSN C631
7	130011	1	PIN, SPLIT (COTTER), M5 x 40, , ASN D632
8	87539712	1	ROD, CONNECTING,
9	84432985	1	LEVER,
10	321204	1	NIPPLE, LUBE, M6 x 1, 16mm lg, , BSN C631
10	323713	1	NIPPLE, LUBE, , ASN D632
11	86548577	1	PIN, M8 x 40, Slotted,
12	322901	2	PIN,
13	412417	1	FORK,
14	130003	2	PIN, SPLIT (COTTER), M3.2 x 20,
15	100016	1	NUT, M10, Cl 8,
16	84433000	1	ROD, CONNECTING,
17	84433015	1	SHAFT,
18	84433013	1	LEVER,

03.216(A 01) CIRCUIT FOR HYDRAULIC BRAKES

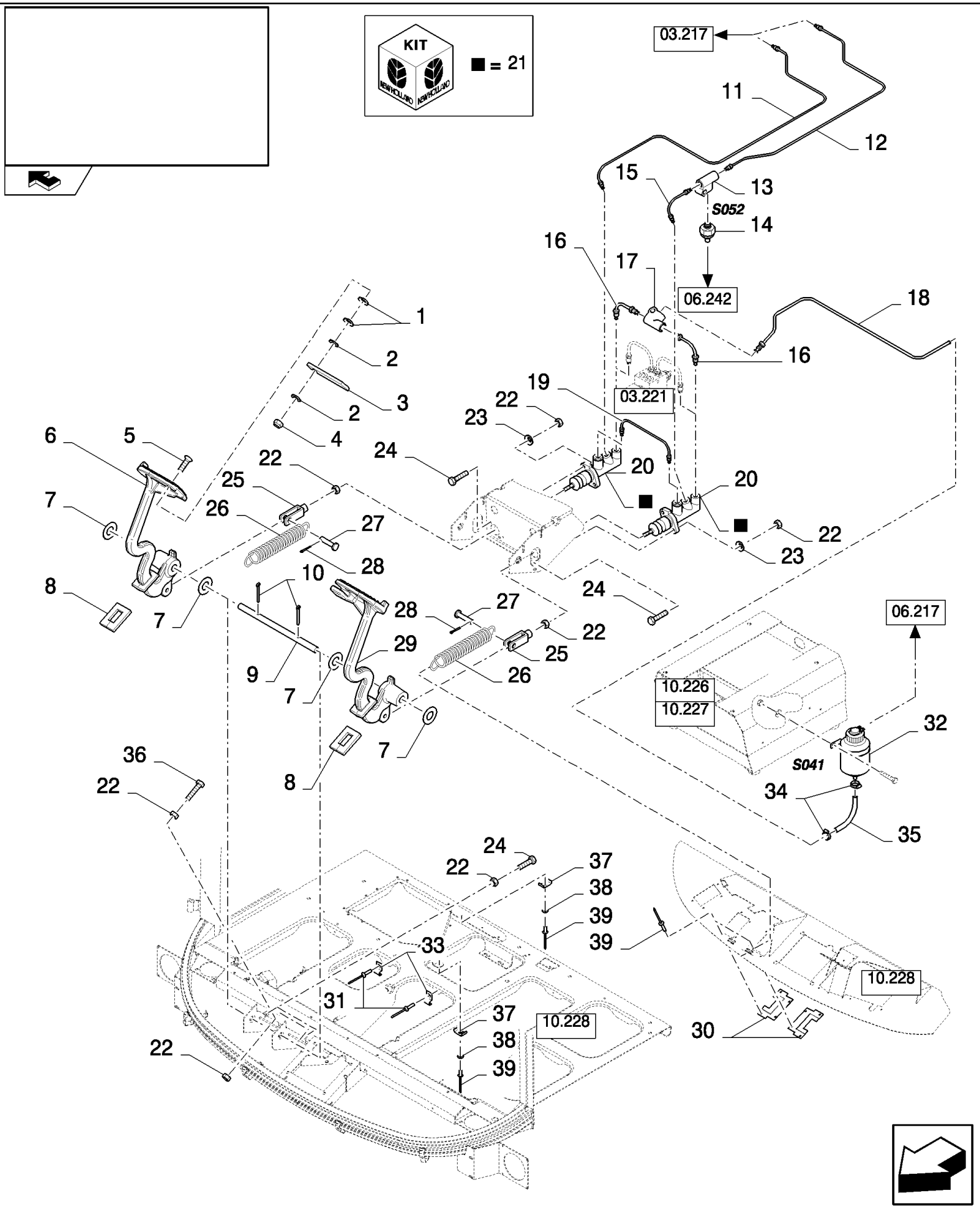

CSX7080 C659 - COMBINE (9/06-8/08)

03.216(A 01) CIRCUIT FOR HYDRAULIC BRAKES

ссылка	Номер детали	Кол-во	Описание
1	397881	2	WASHER, SPRING,
2	84012127	2	WASHER, LOCK, 8MM
3	449009	1	PLATE,
4	9991588	1	NUT, LOCK, M8 x 1.25, Cl 8,
5	87037492	1	SCREW, Hex Soc Flat Hd, M8 x 35, 8.8, M8x35
6	84435250	1	PEDAL,
7	9513615	4	WASHER, 16MM
8	9819826	2	SEAL,
9	9819905	1	SHAFT,
10	130007	2	PIN, SPLIT (COTTER), M4 x 25,
11	84814246	1	BRAKE LINE,
12	84814244	1	BRAKE LINE,
13	9505391	1	TEE,
14	354372	1	SWITCH, PRESSURE,
15	84817526	1	BRAKE LINE,
16	84817530	2	BRAKE LINE,
17	919855	1	TEE,
18	84432419	1	BRAKE LINE,
19	84817528	1	BRAKE LINE,
20	9509901	2	MASTER CYLINDER, (21)
21	9817544	2	KIT, REPAIR,
22	9706690	12	NUT, M8, Cl 8,
23	322358	4	WASHER, SPRING, Belleville, M8,
24	43128	6	BOLT, Hex, M8 x 30, 8.8,
25	921491	2	YOKE,
26	9811656	2	SPRING,
27	412414	2	PIN, CLEVIS, M8 x 35,
28	9512667	2	PIN, SPLIT (COTTER), M2 x 20,
29	84435249	1	PEDAL,
30	9819825	2	COVER,
31	425520	2	RIVET,
32	9819520	1	RESERVOIR, BRAKE FLUID,
33	412089	2	CLAMP,
34	913888	2	CLAMP, HOSE,
35	410970	1	HOSE,
36	120106	2	BOLT, Hex, M8 x 40, 8.8, Full Thd,
37	84814933	2	CLAMP,
38	9824840	2	WASHER, M4,
39	425523	10	RIVET,

03.217(A 01) CIRCUIT FOR HYDRAULIC BRAKES

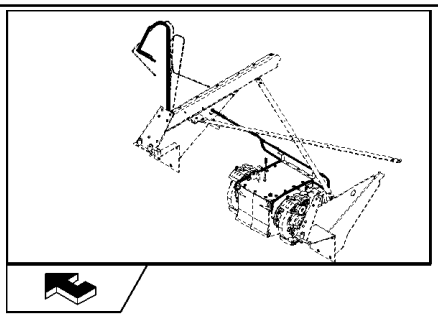

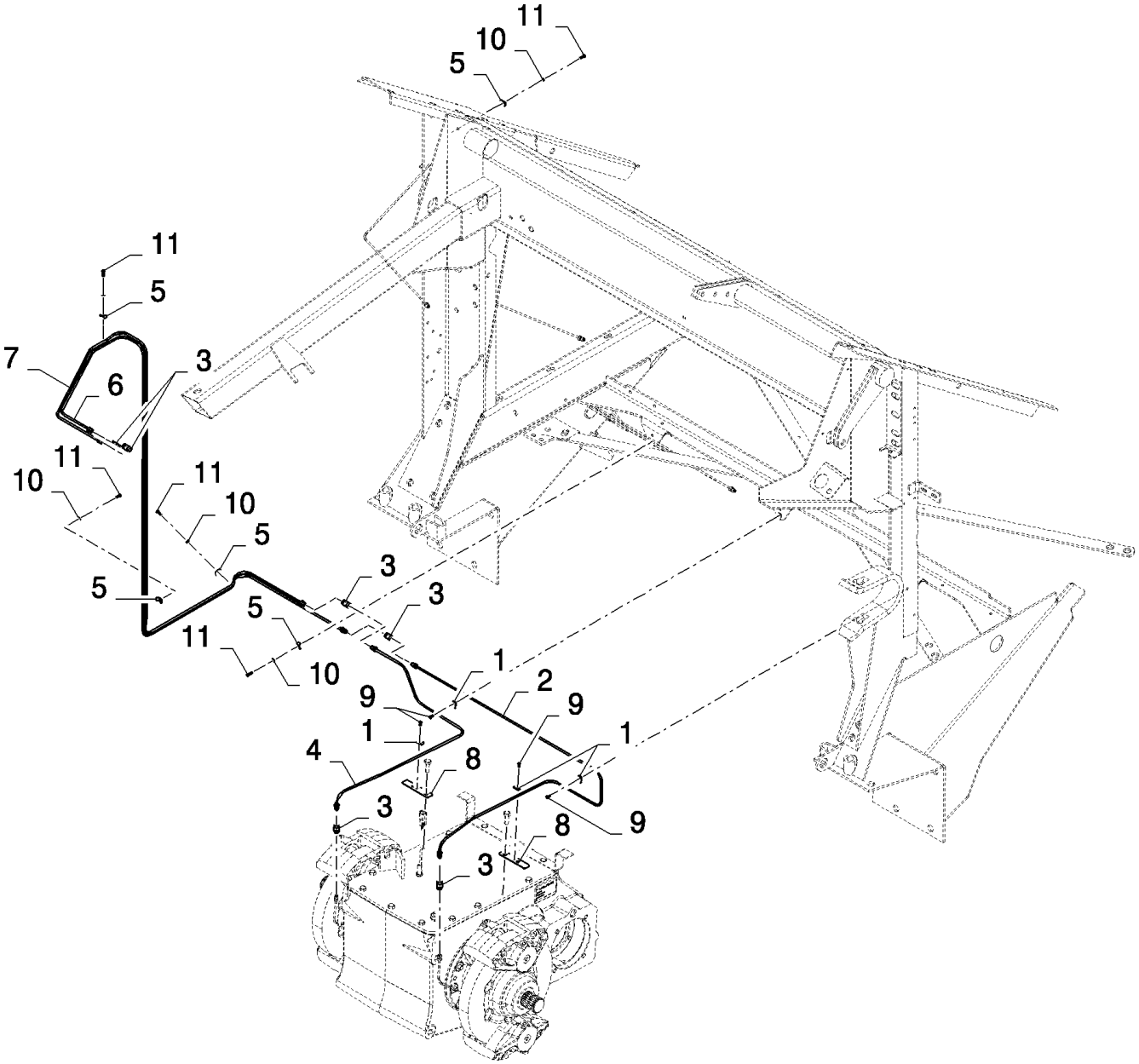

CSX7080 C659 - COMBINE (9/06-8/08)

03.217(A 01) CIRCUIT FOR HYDRAULIC BRAKES

ссылка	Номер детали	Кол-во	Описание
1	84814932	4	CLAMP,
2	87387707	1	BRAKE LINE,
3	84062540	6	CONNECTOR, HYD.,
4	87387709	1	BRAKE LINE,
5	84814933	5	CLAMP,
6	84989542	1	BRAKE LINE,
7	84989503	1	BRAKE LINE,
8	84435608	2	BRACKET,
9	425520	4	RIVET,
10	9824840	5	WASHER, M4,
11	425524	5	RIVET,

03.217(C 01) CIRCUIT FOR HYDRAULIC BRAKES - FOR LATERALE ONLY

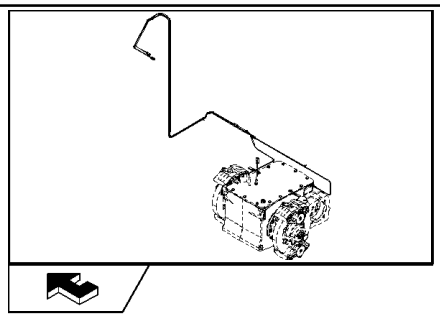

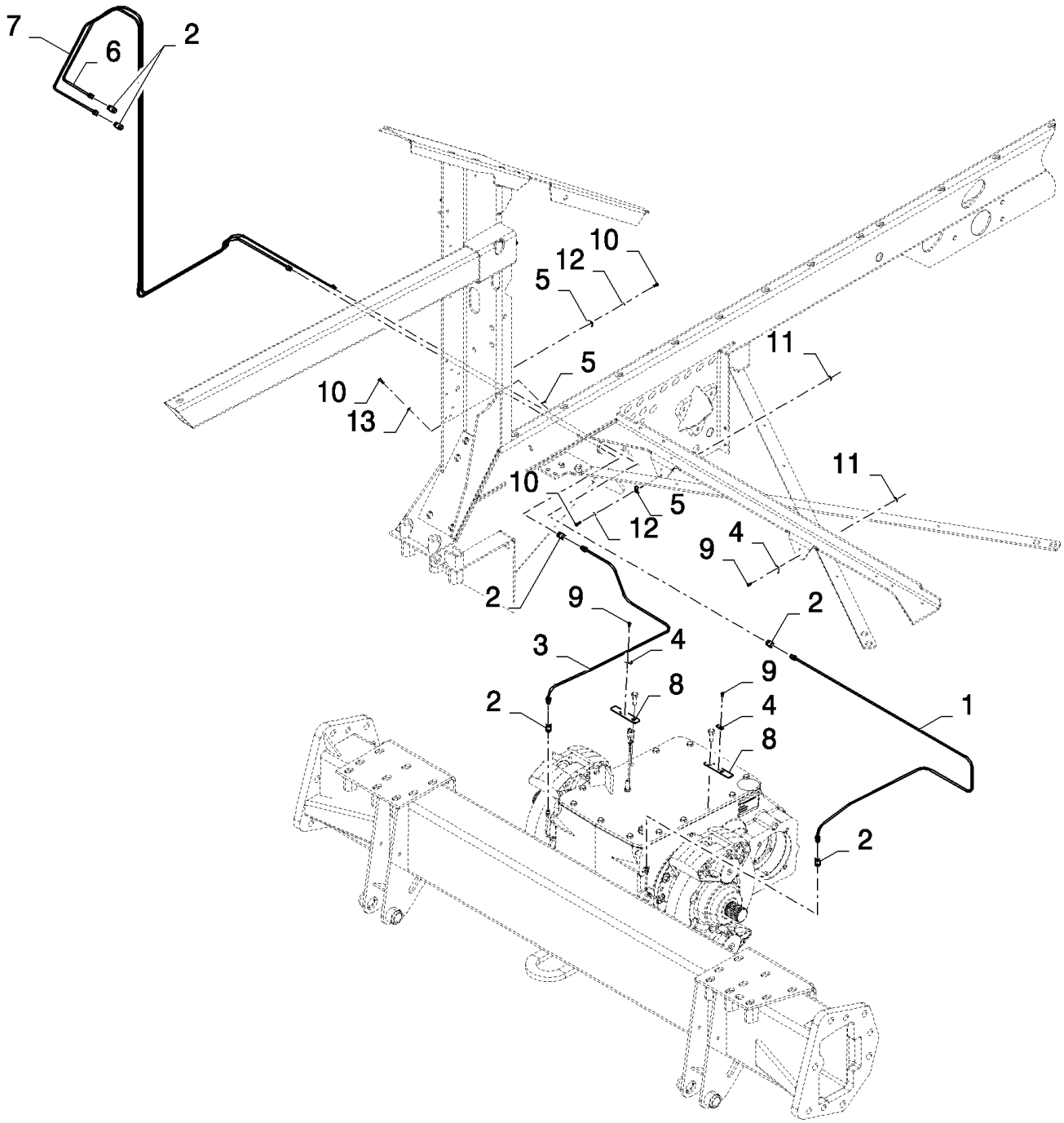

CSX7080 C659 - COMBINE (9/06-8/08)

03.217(C 01) CIRCUIT FOR HYDRAULIC BRAKES - FOR LATERALE ONLY

ссылка	Номер детали	Кол-во	Описание
1	87549906	1	BRAKE LINE,
2	84062540	6	CONNECTOR, HYD.,
3	87549905	1	BRAKE LINE,
4	84814932	3	CLAMP,
5	84814933	5	CLAMP,
6	84439448	1	BRAKE LINE, , FOR CS6060 AND CSX7060 ONLY
6	87593440	1	BRAKE LINING, , FOR CSX7080 ONLY
7	84439468	1	BRAKE LINE, , FOR CS6060 AND CSX7060 ONLY
7	87593442	1	BRAKE LINING, , FOR CSX7080 ONLY
8	84435608	2	BRACKET,
9	425521	4	RIVET,
10	425524	5	RIVET,
11	335872	2	WASHER,
12	322355	2	WASHER, Belleville, M4,
13	140182	1	WASHER, M5 x 18 x 2,

03.218(01) TRANSMISSION HANDBRAKE

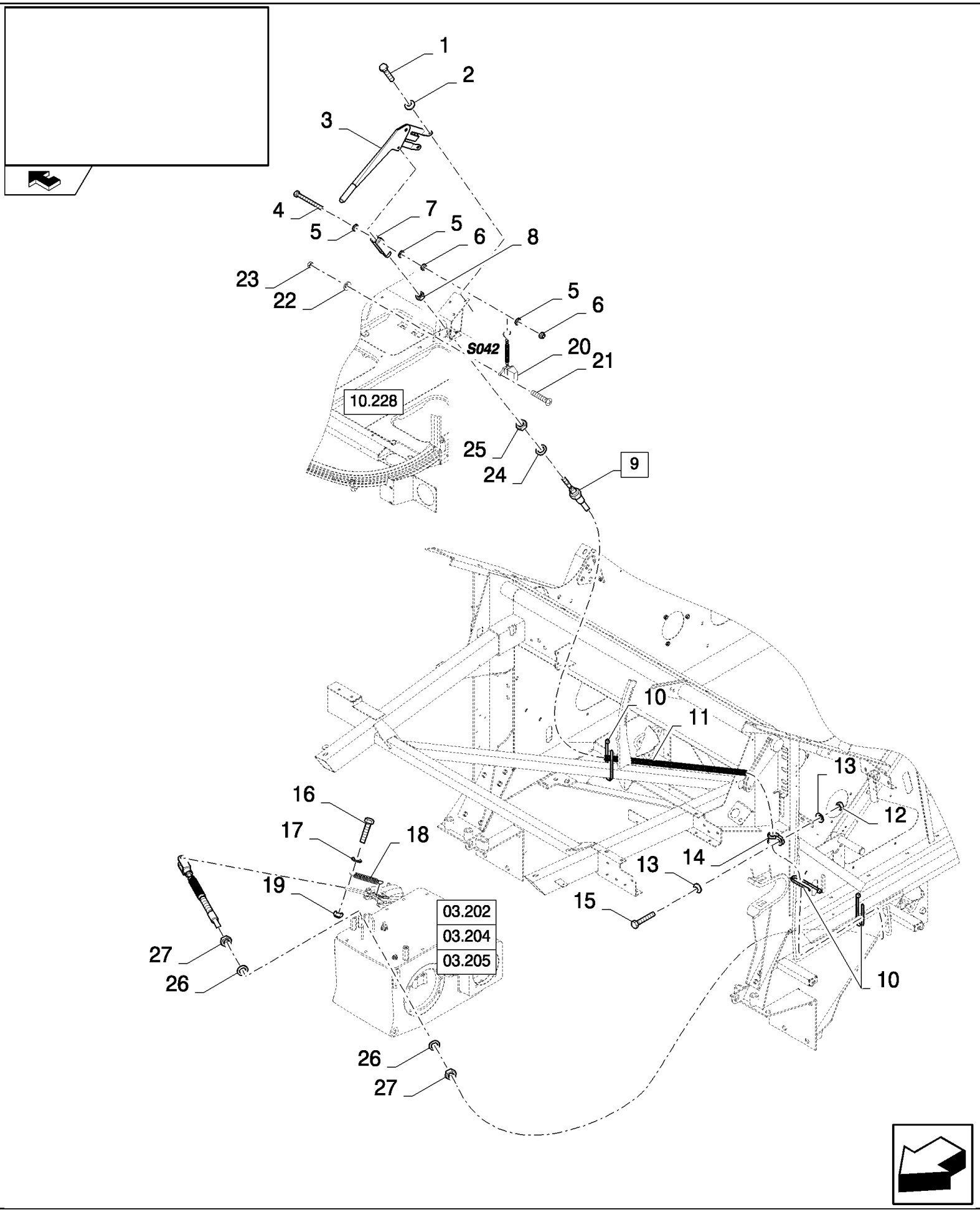

CSX7080 C659 - COMBINE (9/06-8/08)

03.218(01) TRANSMISSION HANDBRAKE

ссылка	Номер детали	Кол-во	Описание
1	120104	3	SCREW, Hex, M8 x 20, 8.8,
2	322358	3	WASHER, SPRING, Belleville, M8,
3	84440895	1	BRAKE, HAND, , BSN C607
3	388341	1	BRAKE, HAND, , ASN D608
4	120056	1	SCREW, Hex, M6 x 50, 8.8,
5	140040	3	WASHER, M6 x 22 x 2,
6	353308	2	NUT, M6 x 1, Cl 8,
7	89850630	1	CLEVIS,
8	100016	1	NUT, M10, Cl 8,
9	84004404	1	CABLE, (25 to 27)
10	9993154	3	ELASTIC STRAP, , BSN C615
10	9993154	4	ELASTIC STRAP, , ASN D616
11	9507812	AR	SLEEVE, L=0.6M HOSE, BSN C615
12	9706755	1	NUT, M6, Cl 8, , BSN C615
13	322357	2	WASHER, SPRING, Belleville, M6, , BSN C615
13	322357	1	WASHER, SPRING, Belleville, M6, , ASN D616
14	335021	1	CLAMP,
15	86977786	1	BOLT, Hex, M6 x 25, 8.8, , BSN C615
16	120068	1	BOLT, Hex, M10 x 40, 8.8, Full Thd,
17	378244	1	WASHER, M10,
18	29833	1	SPRING,
19	100037	1	NUT, M10 x 1.5, Cl 8,
20	470041	1	SWITCH ASSY,
21	86511824	2	SCREW, Cross Pan Hd, M4 x 20,
22	322355	2	WASHER, Belleville, M4,
23	43645	2	SCREW, Hex Flat Hd, M4 x 12, 4.8,
24	140045	1	WASHER, SPRING, Belleville, M10,
25	NSS	1	NOT SERVICED SEPARATELY,
26	NSS	2	NOT SERVICED SEPARATELY,
27	NSS	2	NOT SERVICED SEPARATELY,

03.220(B 01) DRIVE SHAFTS WTHOUT EXTENSIONS

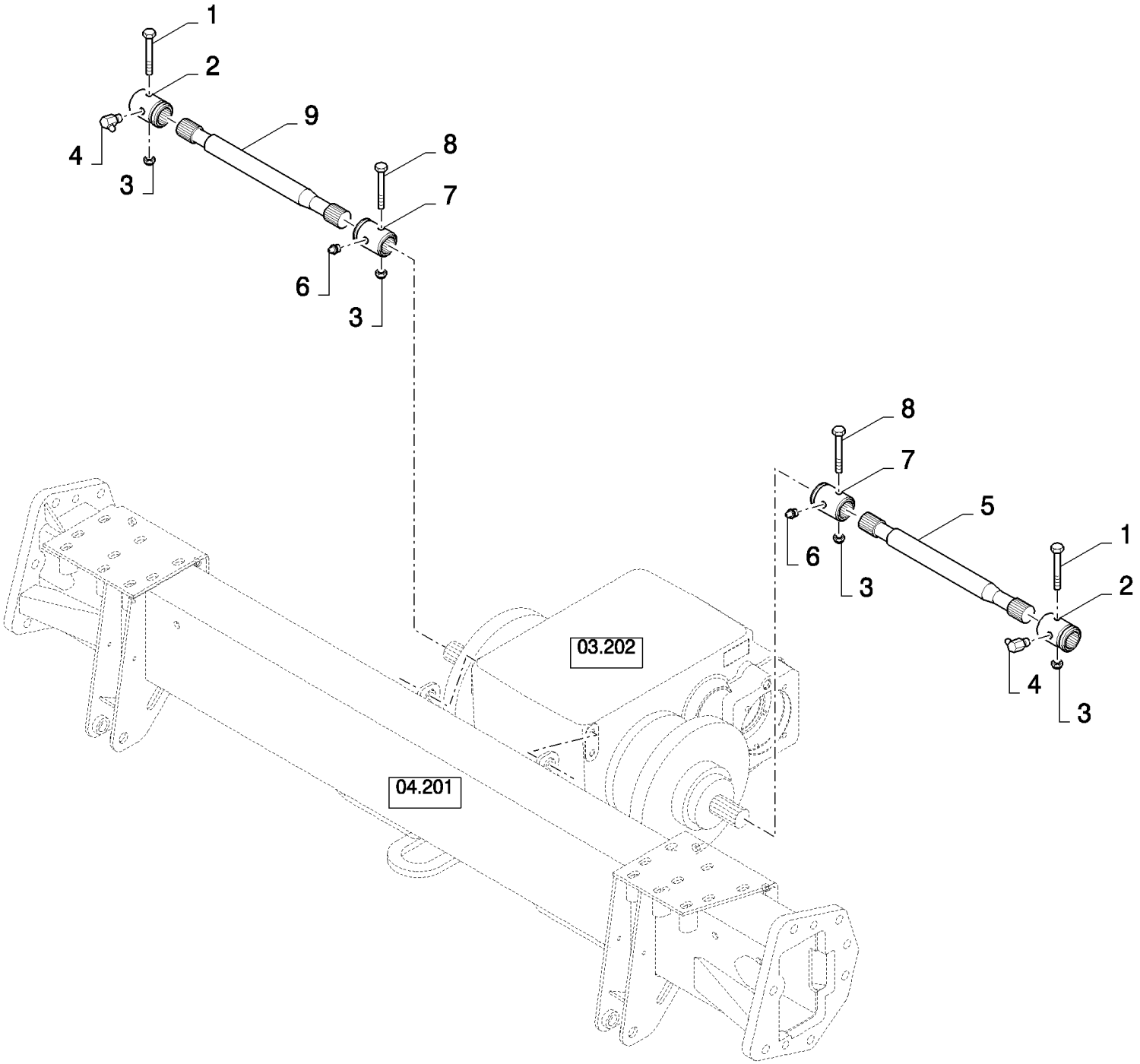

CSX7080 C659 - COMBINE (9/06-8/08)

03.220(B 01) DRIVE SHAFTS WTHOUT EXTENSIONS

ссылка	Номер детали	Кол-во	Описание
1	43144	2	SCREW, Hex, M10 x 70, 8.8,
2	84077843	2	BUSHING, SPLINED,
3	100037	4	NUT, M10 x 1.5, Cl 8,
4	323713	2	NIPPLE, LUBE,
5	84075221	1	SHAFT, CONTROL,
6	321204	2	NIPPLE, LUBE, M6 x 1, 16mm lg,
7	84077841	2	BUSHING, SPLINED,
8	120073	2	BOLT, Hex, M10 x 80, 8.8,
9	84441886	1	SHAFT, CONTROL,

03.221(01) BRAKE LIMITER, FOR MAIZE HEADER ONLY

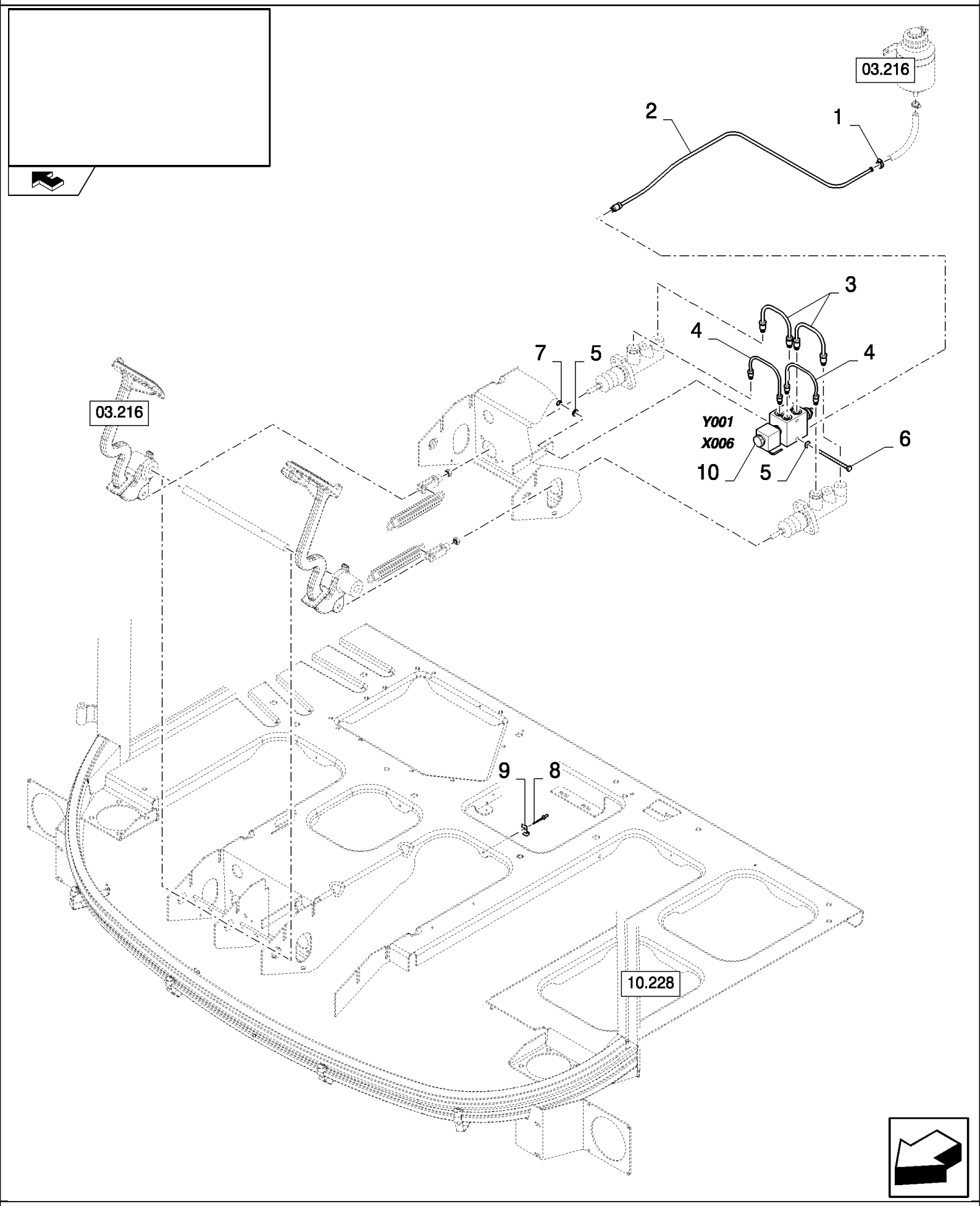

CSX7080 C659 - COMBINE (9/06-8/08)

03.221(01) BRAKE LIMITER, FOR MAIZE HEADER ONLY

ссылка	Номер детали	Кол-во	Описание
1	913888	1	CLAMP, HOSE,
2	84448948	1	BRAKE LINE,
3	84817771	2	TUBE, HYD,
4	84817773	2	TUBE, HYD,
5	322357	2	WASHER, SPRING, Belleville, M6,
6	86508569	1	BOLT, Hex, M6 x 70, 8.8, M6x70
7	9706755	1	NUT, M6, Cl 8,
8	425520	1	RIVET,
9	412089	1	CLAMP,
10	84607499	1	VALVE, HYDRAULIC,

03.229(A 01) TRACTION BEAM, LH - FOR LATERALE ONLY

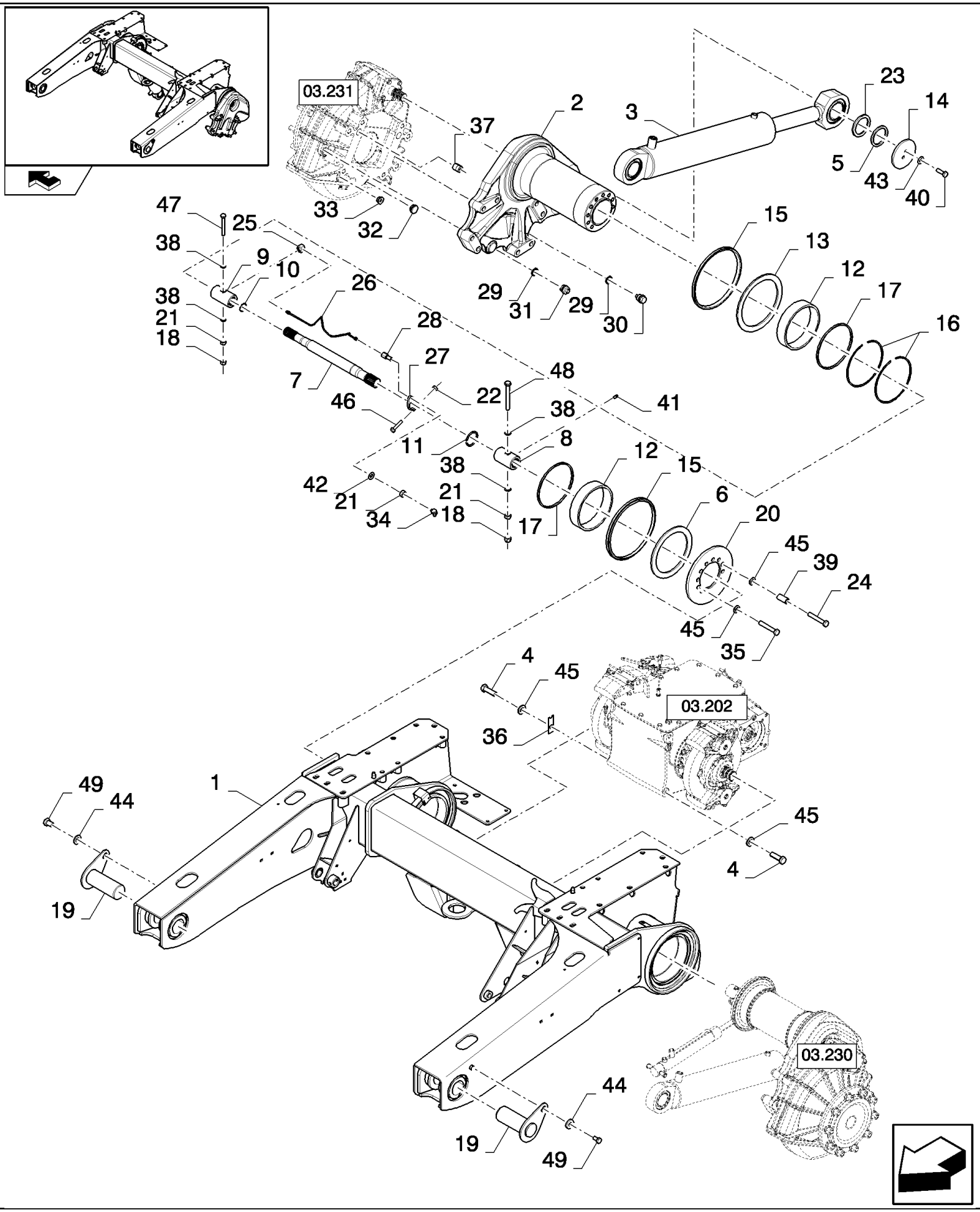

CSX7080 C659 - COMBINE (9/06-8/08)

03.229(A 01) TRACTION BEAM, LH - FOR LATERALE ONLY

ссылка	Номер детали	Кол-во	Описание
1	87548796	1	, FOR CSX7060 ONLY
1	87549891	1	, FOR CSX7080 ONLY
2	87537973	1	ROCKER ARM,
3	87619132	1	HYDRAULIC CYLINDER,
4	87536910	1	ROCKER ARM,
5	87539689	1	RING,
6	87540766	1	RING,
7	87539693	2	SHAFT,
8	87586665	1	BUSHING, SPLINED,
9	87586667	1	BUSHING, SPLINED,
10	84446911	1	CIRCLIP,
11	84446910	1	CIRCLIP,
12	87540764	2	BUSHING,
13	87540765	1	RING,
14	87539690	1	DISC,
15	87540854	2	SEAL,
16	87540853	2	
17	87540855	2	
18	100037	2	NUT, M10 x 1.5, Cl 8,
19	87586778	2	LEVERSHAFT,
20	87539686	1	DISC,
21	100016	3	NUT, M10, Cl 8,
22	100012	1	NUT, M4, Cl 8,
23	87539688	1	RING,
24	86541970	1	BOLT, Hex, M16 x 100, 10.9,
25	87549913	1	NIPPLE, LUBE,
26	87549914	1	PLATE, RETAINING,
27	87549914	1	PLATE, RETAINING,
28	84817004	1	CONNECTOR, HYD.,
29	220025	4	SEALRING,
30	386287	2	BREATHER,
31	336897	2	PLUG,
32	84071595	2	PROFILE,
33	84817215	2	PLUG,
34	323787	1	NIPPLE, LUBE,
35	412398	9	BOLT, Hex, M16 x 50, 10.9,
36	84073986	2	SHIM,
37	626826	6	PIN,
38	84439102	4	WASHER, SEALING,
39	87602774	1	BUSHING,
40	300389	2	BOLT, Hex, M12 x 35, 8.8, Full Thd,
41	323204	1	CLAMP,
42	14045	1	DUST CAP,
43	140046	2	WASHER, Belleville, M12,

CSX7080 C659 - COMBINE (9/06-8/08)

03.229(A 01) TRACTION BEAM, LH - FOR LATERALE ONLY

ссылка	Номер детали	Кол-во	Описание
44	86592701	2	WASHER, M12 x 35 x 5, HT,
45	394631	16	WASHER,
46	412255	1	BOLT, Hex, M4 x 20, 8.8, Full Thd,
47	120073	1	BOLT, Hex, M10 x 80, 8.8,
48	120074	1	BOLT, Hex, M10 x 90, 8.8,
49	43151	2	SCREW, Hex, M12 x 20, 8.8, Full Thd, , BSN C631
49	9706687	2	SCREW, Hex, M12 x 30, 8.8, , ASN D632

03.230(A 01) TRACTION BEAM, RH - FOR LATERALE ONLY

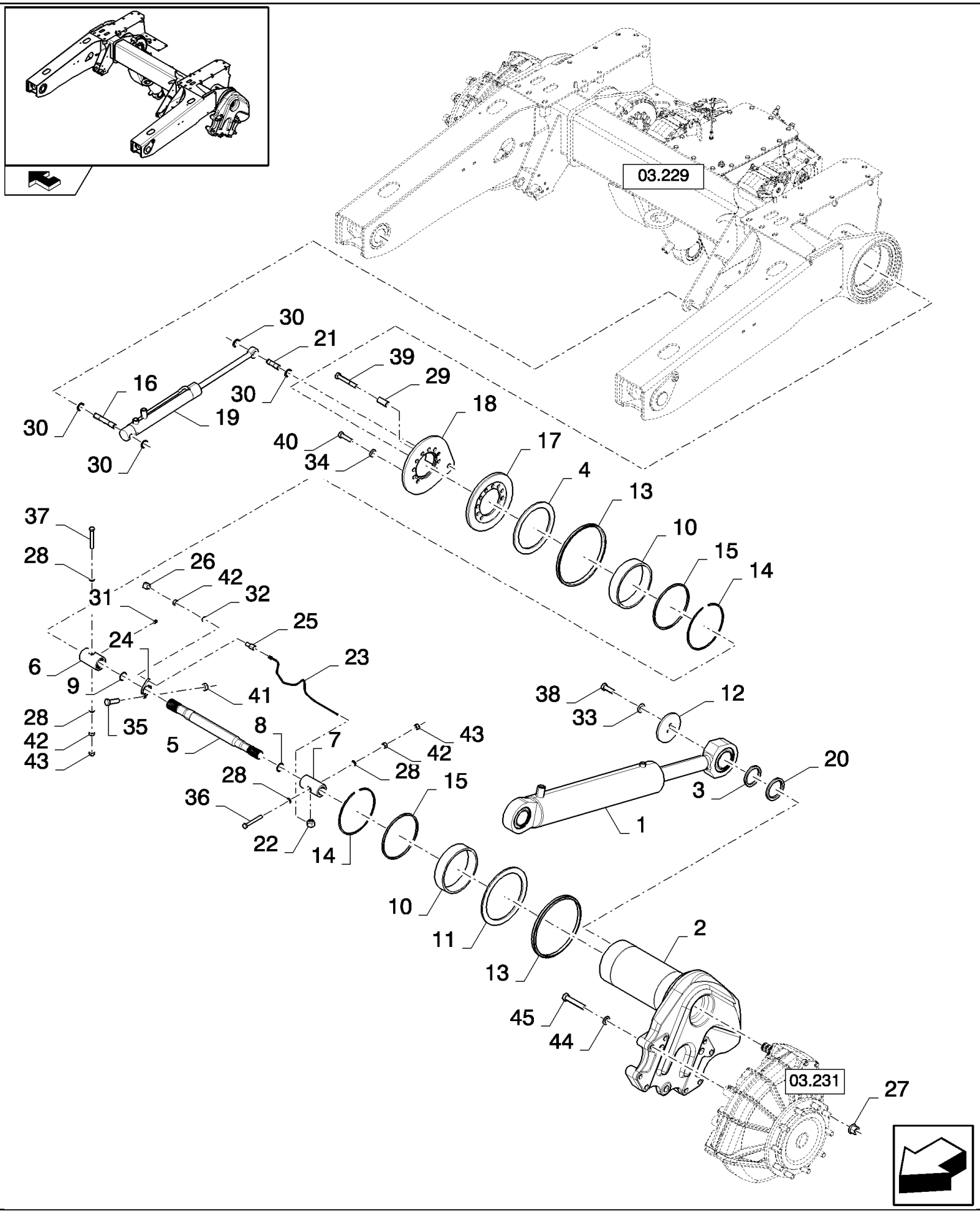

CSX7080 C659 - COMBINE (9/06-8/08)

03.230(A 01) TRACTION BEAM, RH - FOR LATERALE ONLY

ссылка	Номер детали	Кол-во	Описание
1	87619132	1	HYDRAULIC CYLINDER,
2	87536910	1	ROCKER ARM,
3	87539689	1	RING,
4	87540766	1	RING,
5	87539693	1	SHAFT, , FOR CSX7060 ONLY
5	87539695	1	SHAFT, , FOR CSX7080 ONLY
6	87586665	1	BUSHING, SPLINED,
7	87586667	1	BUSHING, SPLINED,
8	84446911	1	CIRCLIP,
9	84446910	1	CIRCLIP,
10	87540764	2	BUSHING,
11	87540765	1	RING,
12	87539690	1	DISC,
13	87540854	2	SEAL,
14	87540853	2	
15	87540855	2	
16	87539704	1	PIN,
17	87539686	1	DISC,
18	87539684	1	DISC,
19	87593495	1	
20	87539688	1	RING,
21	87539706	1	PIN,
22	87549913	1	NIPPLE, LUBE,
23	87549909	1	TUBE,
24	87549914	1	PLATE, RETAINING,
25	84817004	1	CONNECTOR, HYD.,
26	323787	1	NIPPLE, LUBE,
27	748961	20	NUT,
28	84439102	4	WASHER, SEALING,
29	87602774	1	BUSHING,
30	11066871	4	CIRCLIP, M20,
31	312204	1	RING,
32	140045	1	WASHER, SPRING, Belleville, M10,
33	140046	2	WASHER, Belleville, M12,
34	394631	10	WASHER,
35	412255	1	BOLT, Hex, M4 x 20, 8.8, Full Thd,
36	120073	1	BOLT, Hex, M10 x 80, 8.8,
37	120074	1	BOLT, Hex, M10 x 90, 8.8,
38	300389	2	BOLT, Hex, M12 x 35, 8.8, Full Thd,
39	84063080	3	
40	9828248	7	BOLT, Hex, M16 x 60, 10.9,
41	100012	1	NUT, M4, Cl 8,
42	100016	3	NUT, M10, Cl 8,
43	100037	2	NUT, M10 x 1.5, Cl 8,

CSX7080 C659 - COMBINE (9/06-8/08)

03.230(A 01) TRACTION BEAM, RH - FOR LATERALE ONLY

ссылка	Номер детали	Кол-во	Описание
44	394632	16	WASHER, M20 x 40 x 4, HT,
45	86508350	16	BOLT, Hex, M20 x 110, 10.9,

03.231(01) FINAL DRIVE 11/111 - FOR LATERALE ONLY

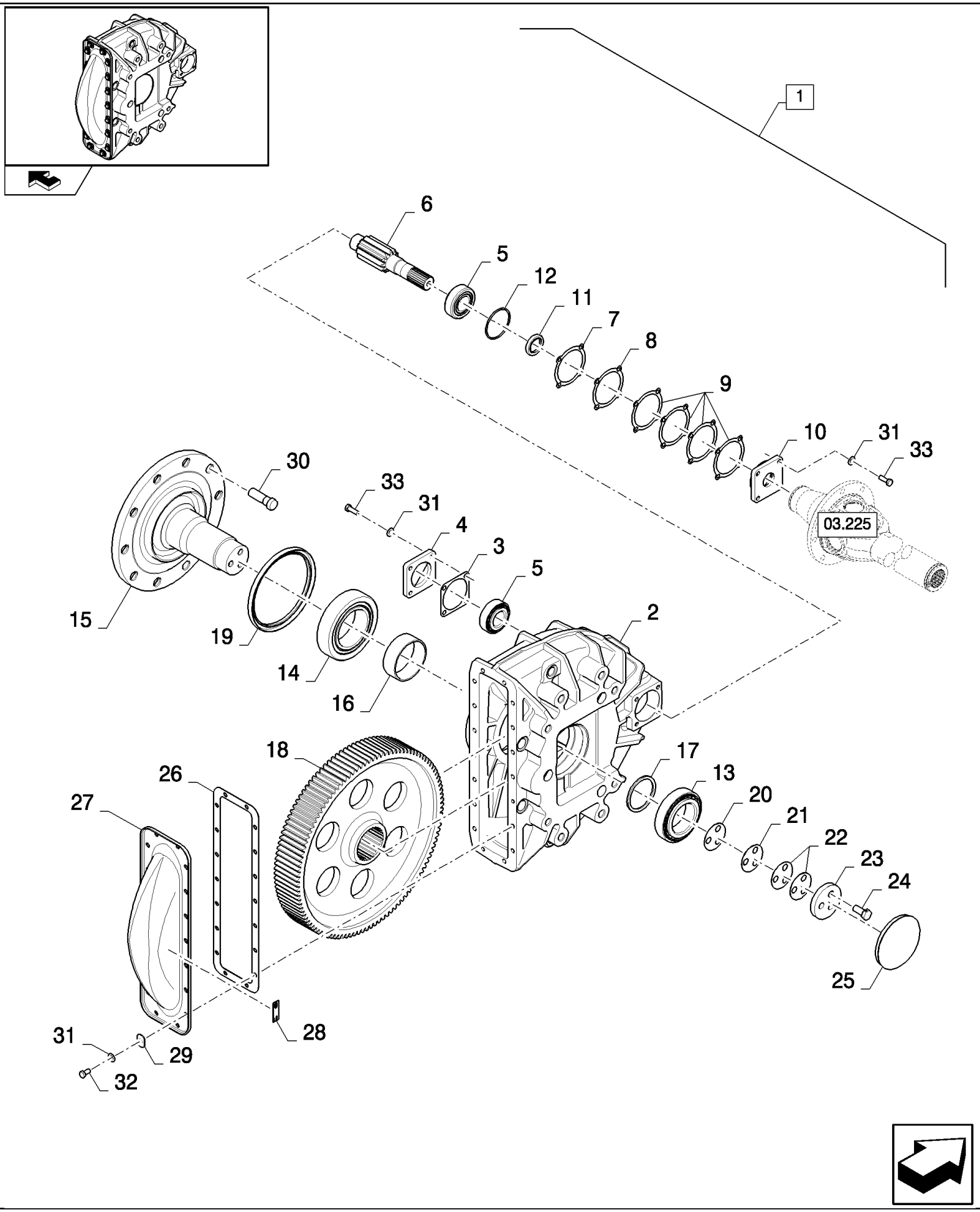

CSX7080 C659 - COMBINE (9/06-8/08)

03.231(01) FINAL DRIVE 11/111 - FOR LATERALE ONLY

ссылка	Номер детали	Кол-во	Описание
1	87558440	1	HOUSING, FINAL DRIVE, (2 to 33)
2	87539683	1	HOUSING, FINAL DRIVE,
3	410920	1	SEAL,
4	613212	1	FLANGE,
5	754567	1	BEARING, ROLLER, TAPERED,
6	84458011	1	GEAR, DRIVING,
7	382950	1	SHIM, 0.5mm Thk,
8	382949	1	SHIM,
9	382948	4	SHIM, 0.05mm Thk,
10	754516	1	FLANGE,
11	66807	1	SEAL,
12	913107	1	O-RING, -235, 70 Duro, 3.109" ID x .139" Thk,
13	754565	1	BEARING, ROLLER, TAPERED,
14	86975648	1	BEARING, ROLLER, TAPERED,
15	87393056	1	FLANGE,
16	84814999	1	SPACER,
17	613200	1	SPACER,
18	751029	1	GEAR,
19	9832264	1	SEAL,
20	395393	1	SHIM, 0.5mm Thk,
21	395392	1	SHIM, 0.2mm Thk,
22	395391	2	SHIM, 0.05mm Thk,
23	382503	1	FLANGE,
24	84443546	3	SCREW,
25	613201	1	COVER,
26	913369	1	GASKET,
27	84074608	1	COVER,
28	87336072	1	PLATE, IDENTITY,
29	743794	18	WASHER,
30	330291	10	BOLT,
31	140045	26	WASHER, SPRING, Belleville, M10,
32	43138	18	SCREW, Hex, M10 x 20, 8.8, Full Thd,
33	43140	8	BOLT, Hex, M10 x 30, 8.8, Full Thd,

FRONT AXLE	**ESSIEU AVANT**	**EJE DELANTERO**	**FORAKSEL**
ASSALE ANTERIORE	**VORDERACHSE**	**EIXO DIANTIERO**	**VOORAS**

SEC. 4

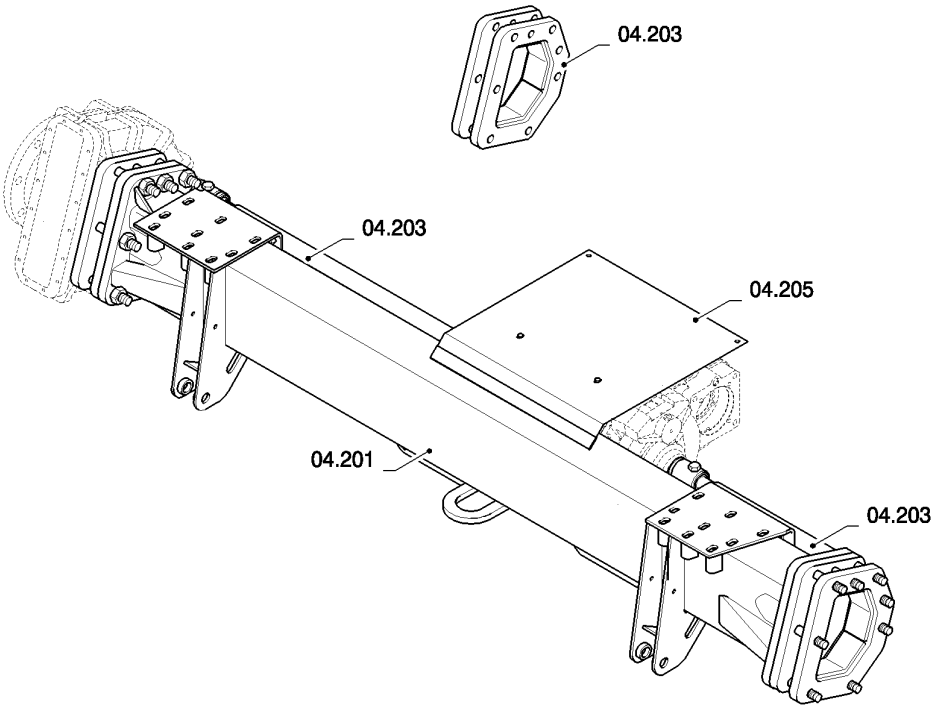

ссылка	Номер детали	Кол-во	Описание

FRONT AXLE	**ESSIEU AVANT**	**EJE DELANTERO**	**FORAKSEL**
ASSALE ANTERIORE	**VORDERACHSE**	**EIXO DIANTIERO**	**VOORAS**

SEC. 4

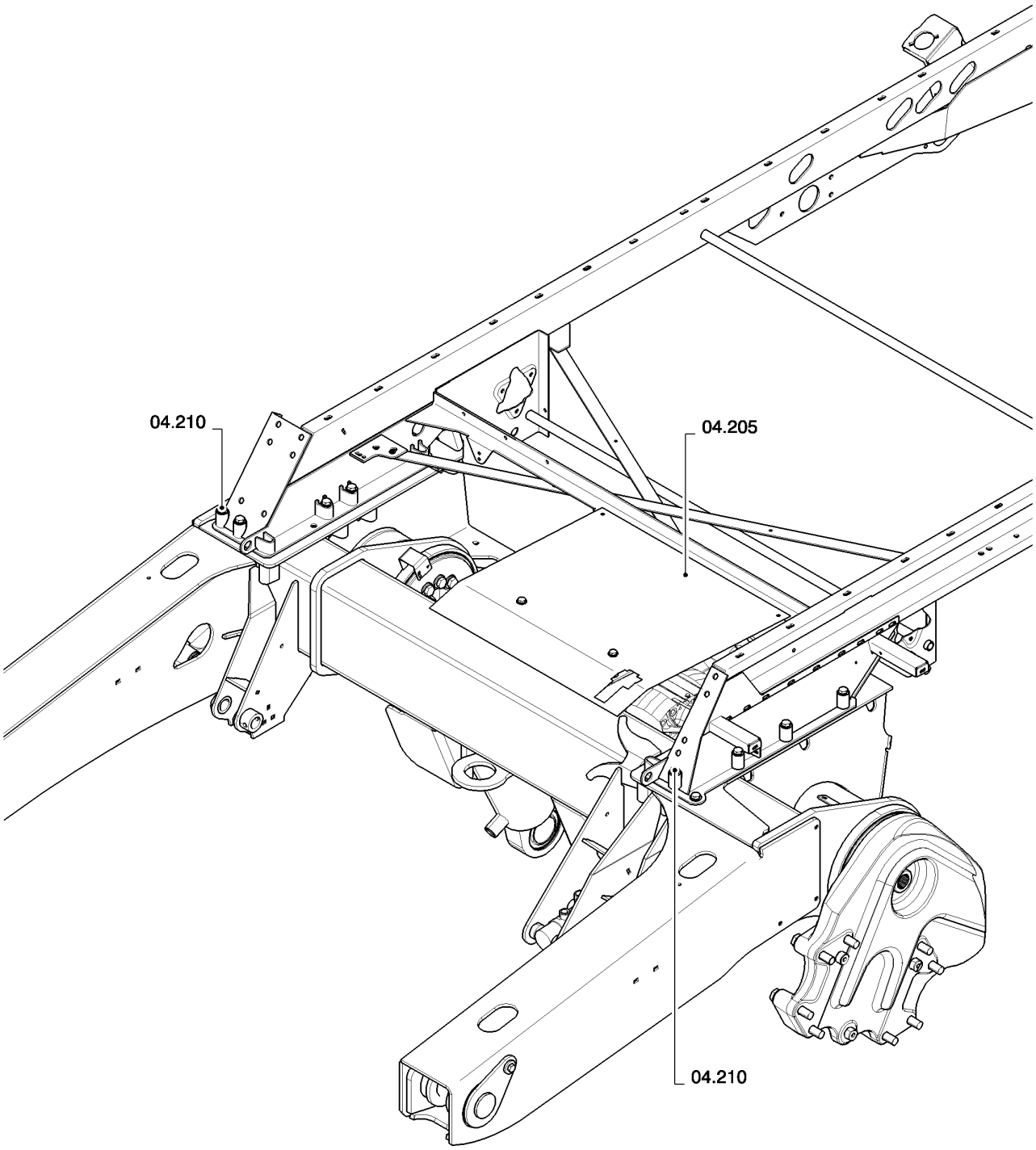

ссылка	Номер детали	Кол-во	Описание

04.201(B 01) FRONT AXLE

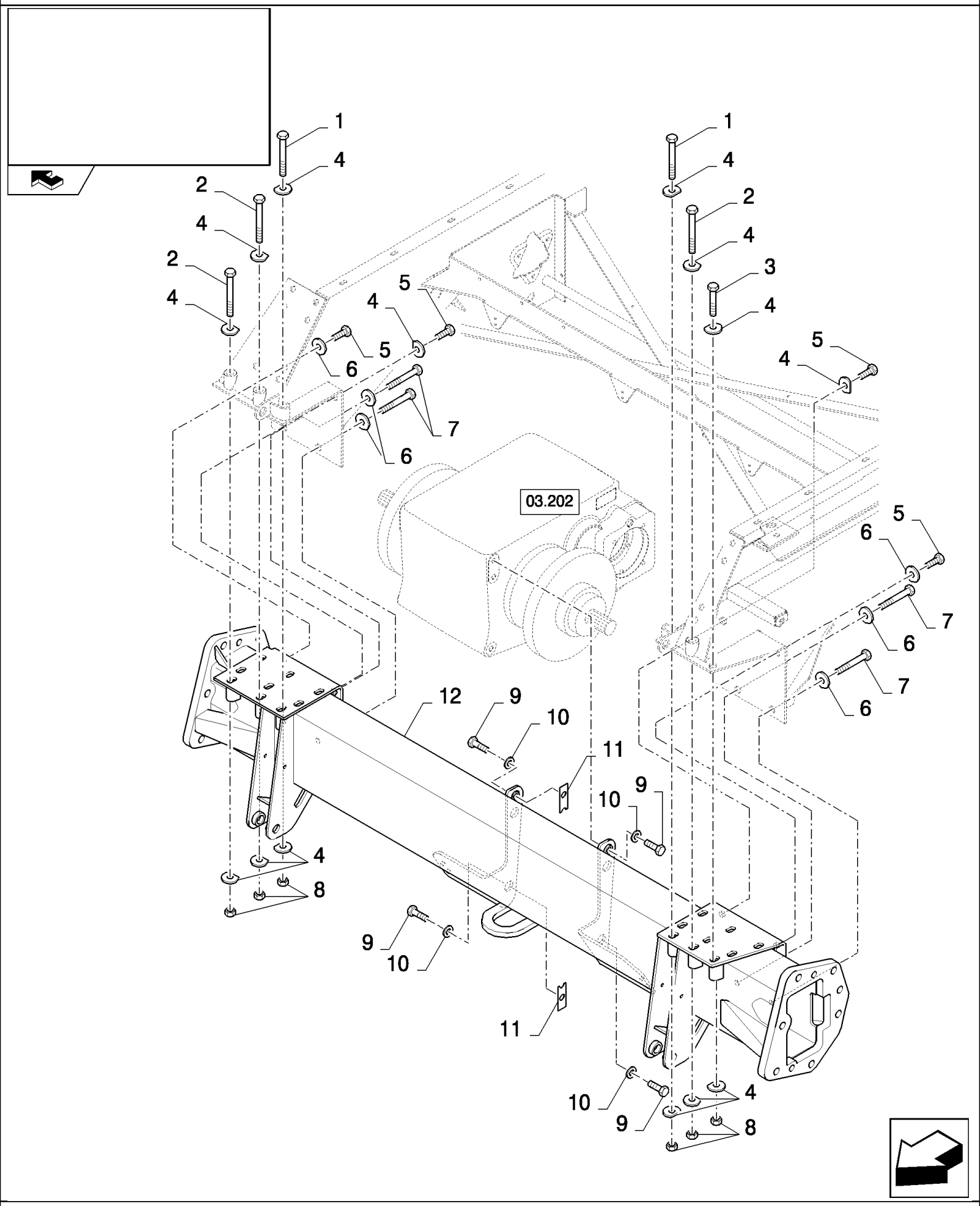

CSX7080 C659 - COMBINE (9/06-8/08)

04.201(B 01) FRONT AXLE

ссылка	Номер детали	Кол-во	Описание
1	334967	2	BOLT, Hex, M16 x 140, 8.8,
2	362573	3	BOLT, Hex, M16 x 150, 8.8,
3	374889	1	BOLT, Hex, M16 x 100, 8.8,
4	333041	15	WASHER,
5	43168	4	BOLT, Hex, M16 x 40, 8.8,
6	333040	5	WASHER,
7	43874	4	SCREW, Hex, M16 x 110, 8.8,
8	100020	6	NUT, M16, Cl 8,
9	120090	6	SCREW, Hex, M16 x 50, 8.8,
10	394631	6	WASHER,
11	84073986	2	SHIM,
12	84454953	1	AXLE, FRONT,

04.203(B 01) EXTENSIONS

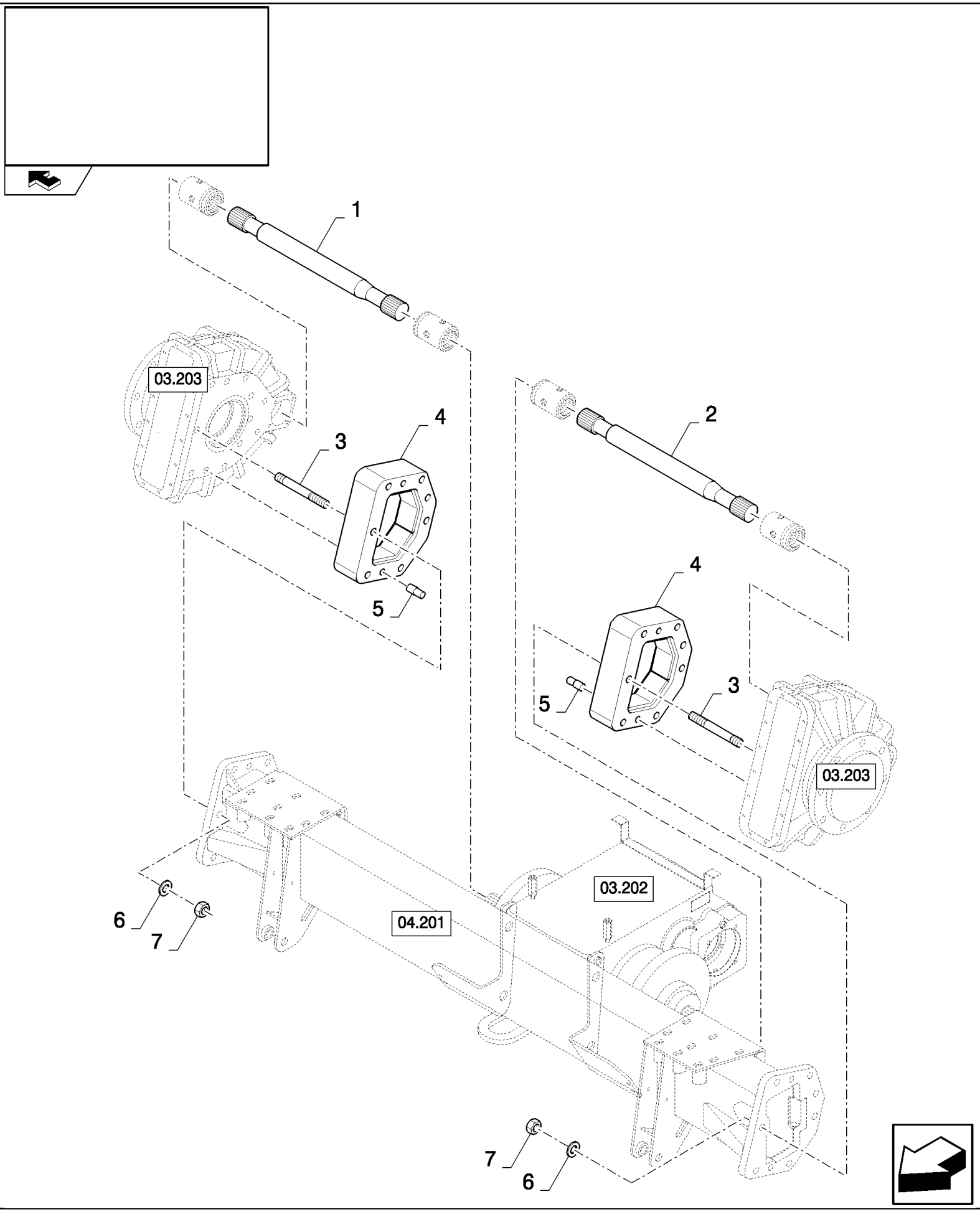

CSX7080 C659 - COMBINE (9/06-8/08)

04.203(B 01) EXTENSIONS

ссылка	Номер детали	Кол-во	Описание
1	84449075	1	SHAFT, CONTROL,
2	84449072	1	SHAFT, CONTROL,
3	84448850	16	STUD,
4	84448890	2	EXTENSION,
5	84448920	4	PIN,
6	394632	16	WASHER, M20 x 40 x 4, HT,
7	9847024	16	NUT, M20, Cl 10,

04.205(01) GEARBOX AND BRAKE PROTECTIONS

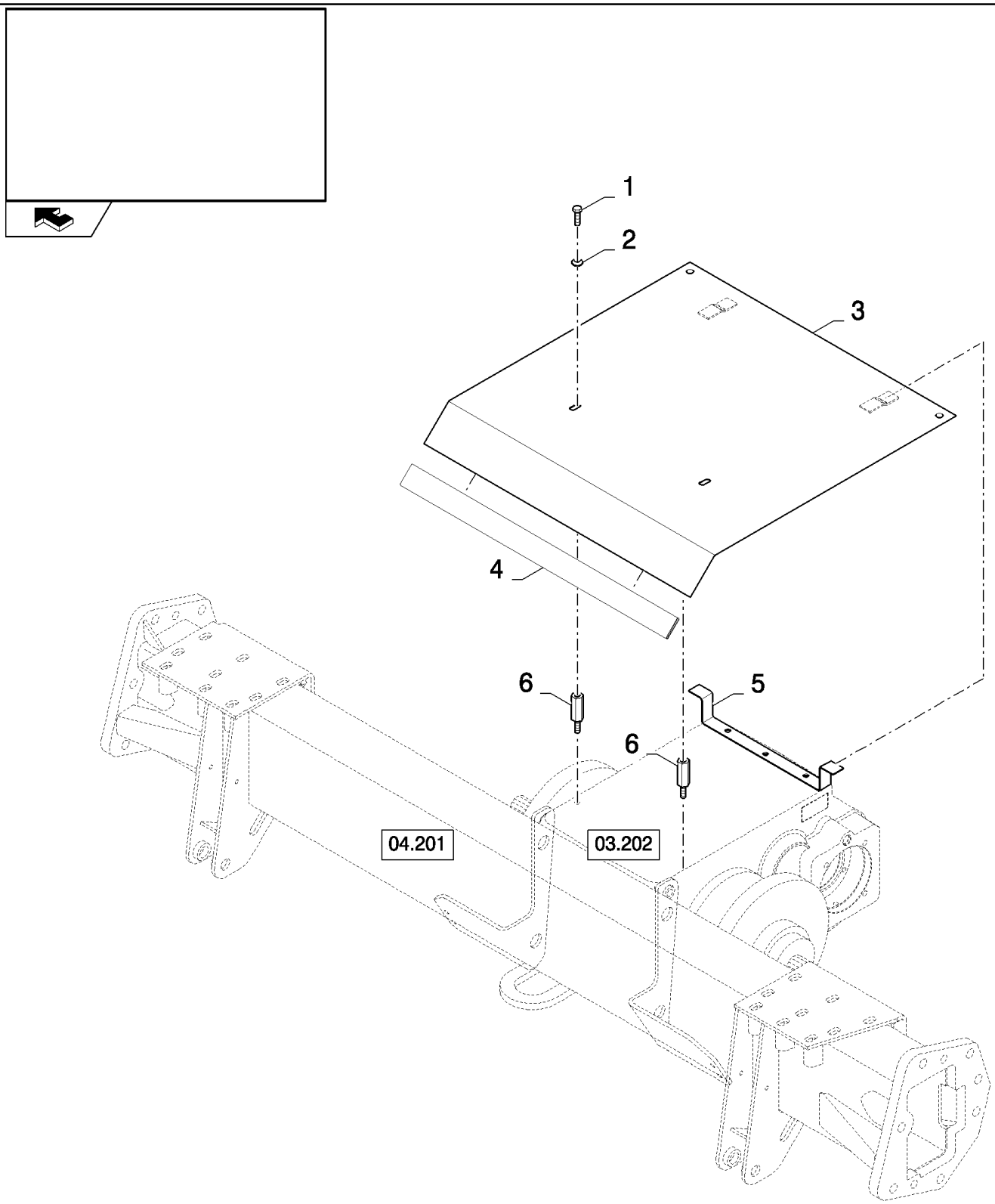

CSX7080 C659 - COMBINE (9/06-8/08)

04.205(01) GEARBOX AND BRAKE PROTECTIONS

ссылка	Номер детали	Кол-во	Описание
1	120103	2	BOLT, Hex, M8 x 16, 8.8,
2	412650	2	WASHER, Belleville, M8,
3	84433243	1	SHIELD,
4	401311	1	HOSE, PROTECTION, L=0.46M
5	84075330	1	BRACKET,
6	87539097	2	SCREW,

04.205(A 01) GEARBOX AND BRAKE PROTECTIONS - FOR LATERALE ONLY

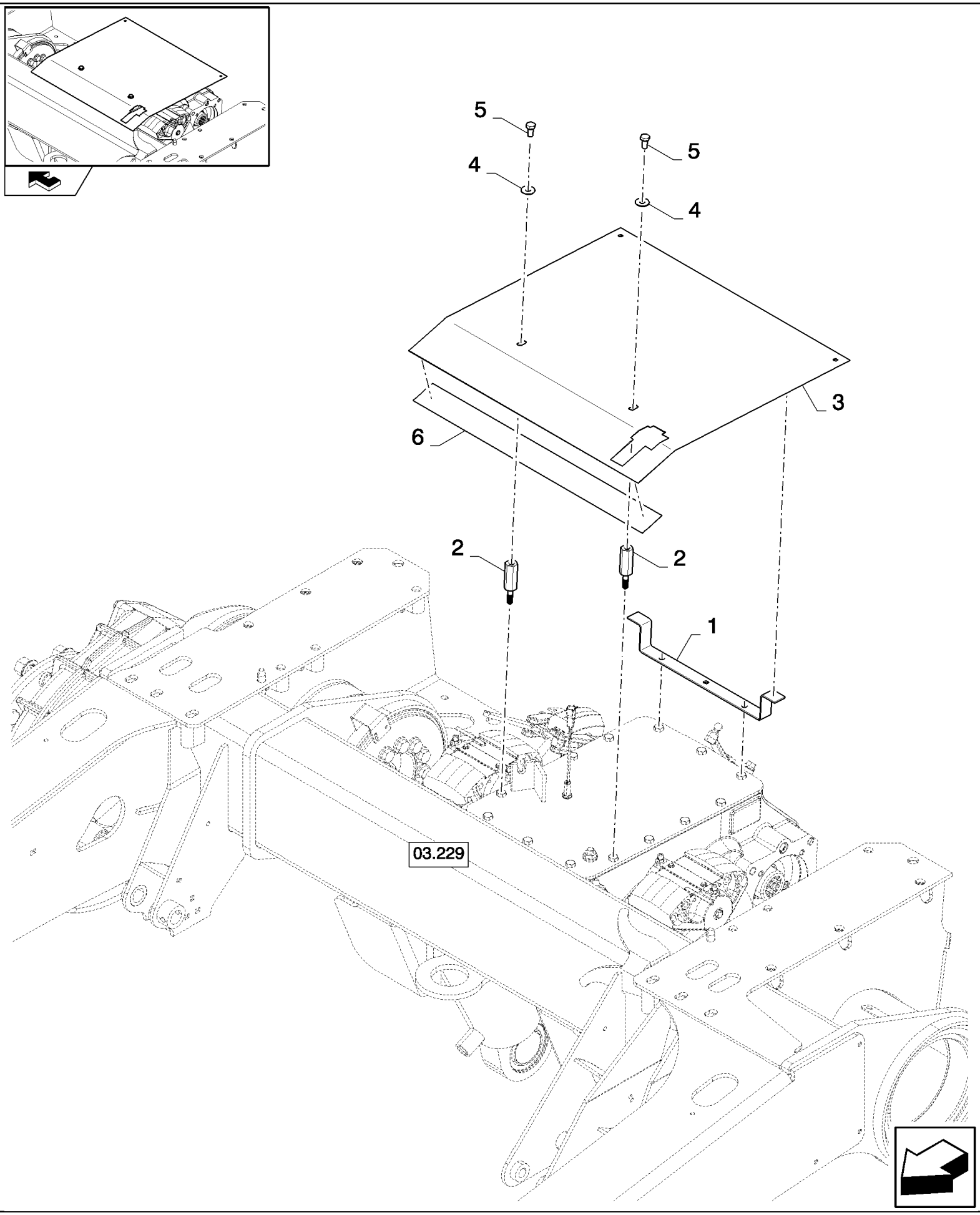

CSX7080 C659 - COMBINE (9/06-8/08)

04.205(A 01) GEARBOX AND BRAKE PROTECTIONS - FOR LATERALE ONLY

ссылка	Номер детали	Кол-во	Описание
1	84075330	1	BRACKET,
2	84075338	2	SCREW,
3	87585974	1	PROTECTING COVER,
4	412650	2	WASHER, Belleville, M8,
5	120103	2	BOLT, Hex, M8 x 16, 8.8,
6	401311	1	HOSE, PROTECTION, L=0.46M

04.210(01) FRONT AXLE - FOR LATERALE ONLY

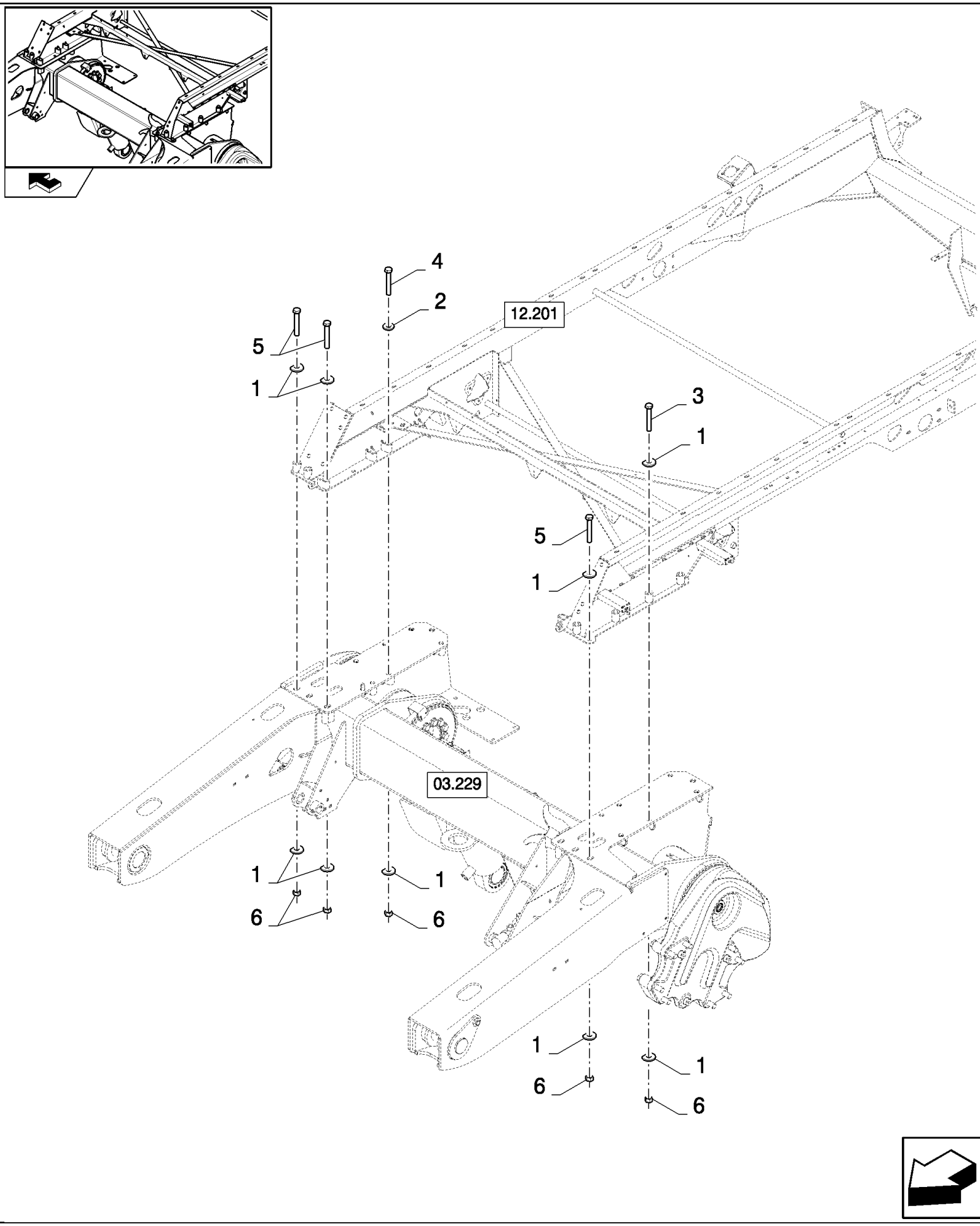

CSX7080 C659 - COMBINE (9/06-8/08)

04.210(01) FRONT AXLE - FOR LATERALE ONLY

ссылка	Номер детали	Кол-во	Описание
1	333041	18	WASHER,
2	84058945	14	WASHER,
3	374889	8	BOLT, Hex, M16 x 100, 8.8,
4	321246	7	BOLT, Hex, M16 x 120, 8.8,
5	362573	5	BOLT, Hex, M16 x 150, 8.8,
6	100020	12	NUT, M16, Cl 8,

REAR AXLE	**ESSIEU POSTÉRIEUR**	**EJE POSTERIOR**	**MANCANTE**
ASSALE POSTERIORE	**HINTERACHSE**	**PONTE TRASEIRO**	**ACHTERAS**

SEC. 5

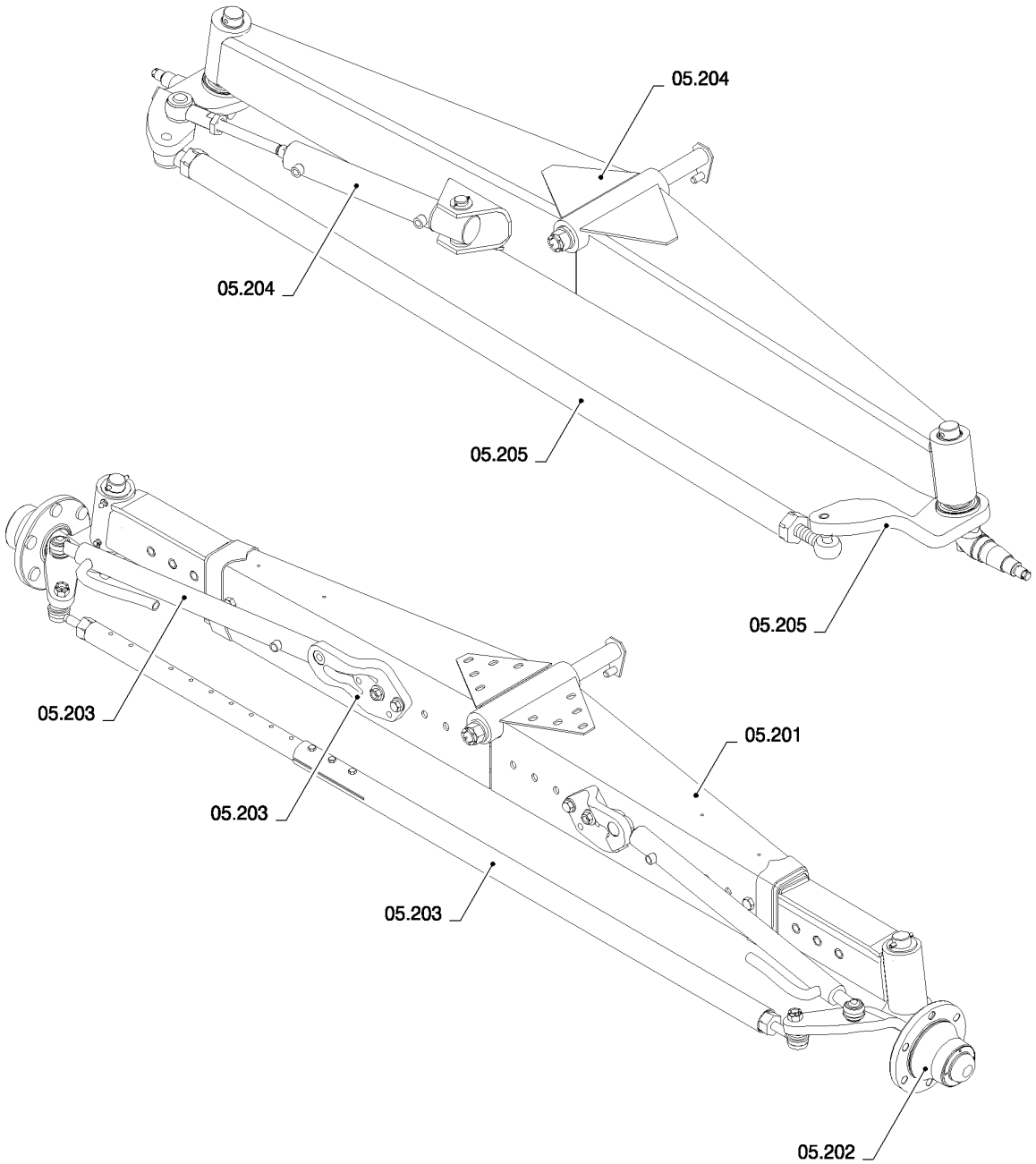

ссылка	Номер детали	Кол-во	Описание

REAR AXLE	**ESSIEU POSTÉRIEUR**	**EJE POSTERIOR**	**MANCANTE**
ASSALE POSTERIORE	**HINTERACHSE**	**PONTE TRASEIRO**	**ACHTERAS**

SEC. 5

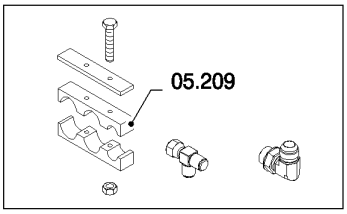

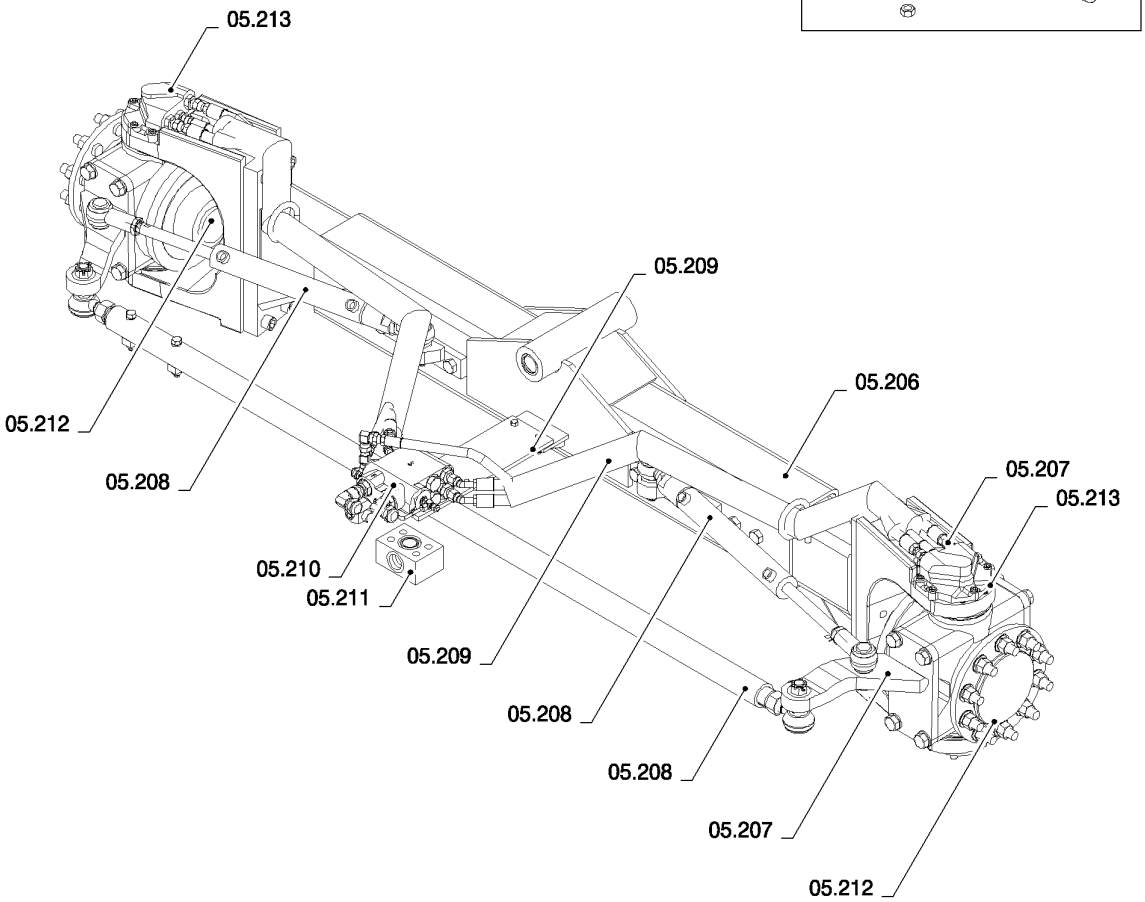

ссылка	Номер детали	Кол-во	Описание

05.201(01) ADJUSTABLE STEERING AXLE

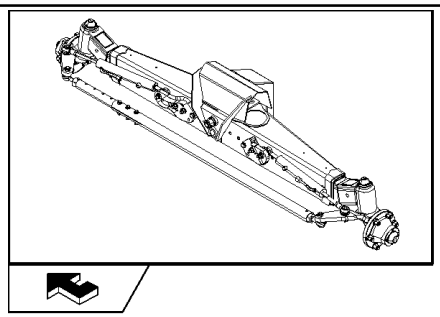

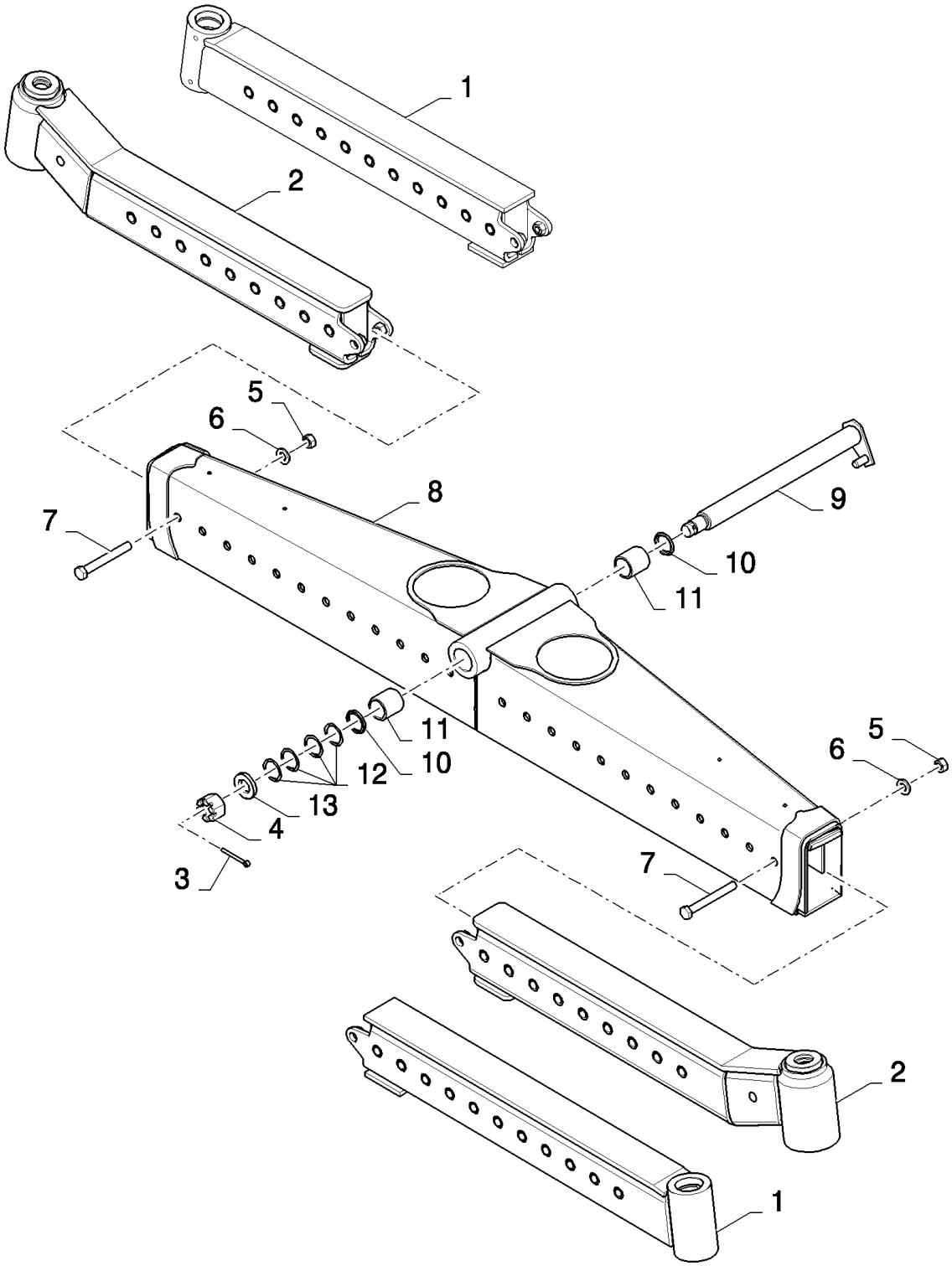

CSX7080 C659 - COMBINE (9/06-8/08)

05.201(01) ADJUSTABLE STEERING AXLE

ссылка	Номер детали	Кол-во	Описание
1	87354708	2	EXTENSION, , FOR LOW CENTER ONLY
2	87354750	2	EXTENSION, , FOR HIGH CENTER ONLY
3	130016	1	PIN, SPLIT (COTTER), M6.3 x 63,
4	390822	1	NUT, SLOTTED, M30 x 1.5, Cl 8, M30x1.5
5	392530	2	NUT, M16, Cl 10,
6	394631	2	WASHER,
7	392531	2	BOLT, Hex, M16 x 130, 10.9, M16x130
8	84439301	1	AXLE, REAR,
9	84077850	1	SHAFT,
10	84078068	2	SEALRING,
11	84439254	2	BUSHING,
12	140124	4	PLATE, ADJUSTING,
13	84334054	1	WASHER, 31MM

05.202(01) WHEEL HUBS

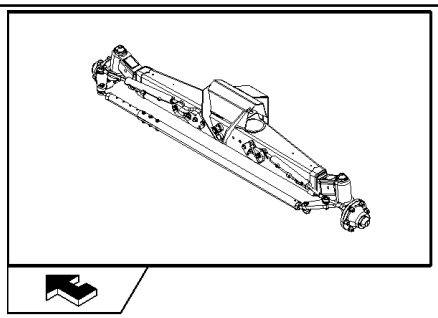

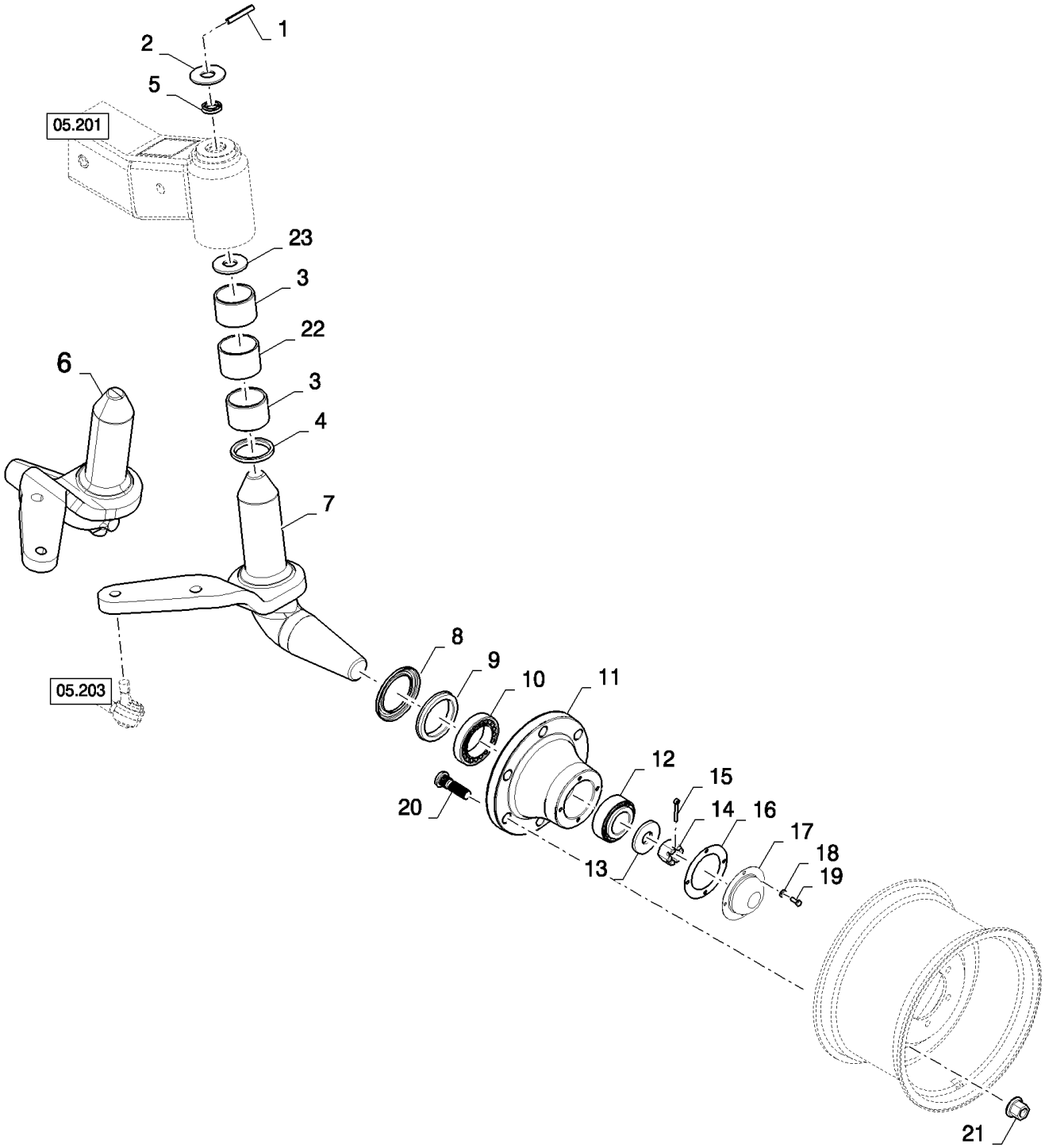

CSX7080 C659 - COMBINE (9/06-8/08)

05.202(01) WHEEL HUBS

ссылка	Номер детали	Кол-во	Описание
1	412690	2	PIN, M10 x 65, Slotted,
2	87375314	2	WASHER,
3	87371944	4	BUSHING,
4	87373655	2	SEAL, HYD-CYLINDER,
5	84801314	2	SEAL, HYD-CYLINDER,
6	87373139	1	SPINDLE,
7	87373137	1	SPINDLE,
8	87373653	2	CUP, COVER,
9	87373656	2	SEAL, HYD-CYLINDER,
10	750347	2	BEARING, ROLLER,
11	87373185	2	HUB,
12	9832269	2	BEARING, ROLLER,
13	87520657	2	WASHER,
14	309090	2	NUT, SLOTTED, M24 x 1.5, Cl 8, M24x1.5
15	130011	2	PIN, SPLIT (COTTER), M5 x 40,
16	743583	2	GASKET,
17	743581	2	COVER,
18	322357	8	WASHER, SPRING, Belleville, M6,
19	86508568	8	SCREW, Hex, M6 x 16, 8.8,
20	418817	12	BOLT,
21	748960	12	NUT, M18x1.5
22	87371948	2	INSERT,
23	87371946	2	DISC,

05.203(01) ADJUSTABLE STEERING AXLE AND CYLINDERS

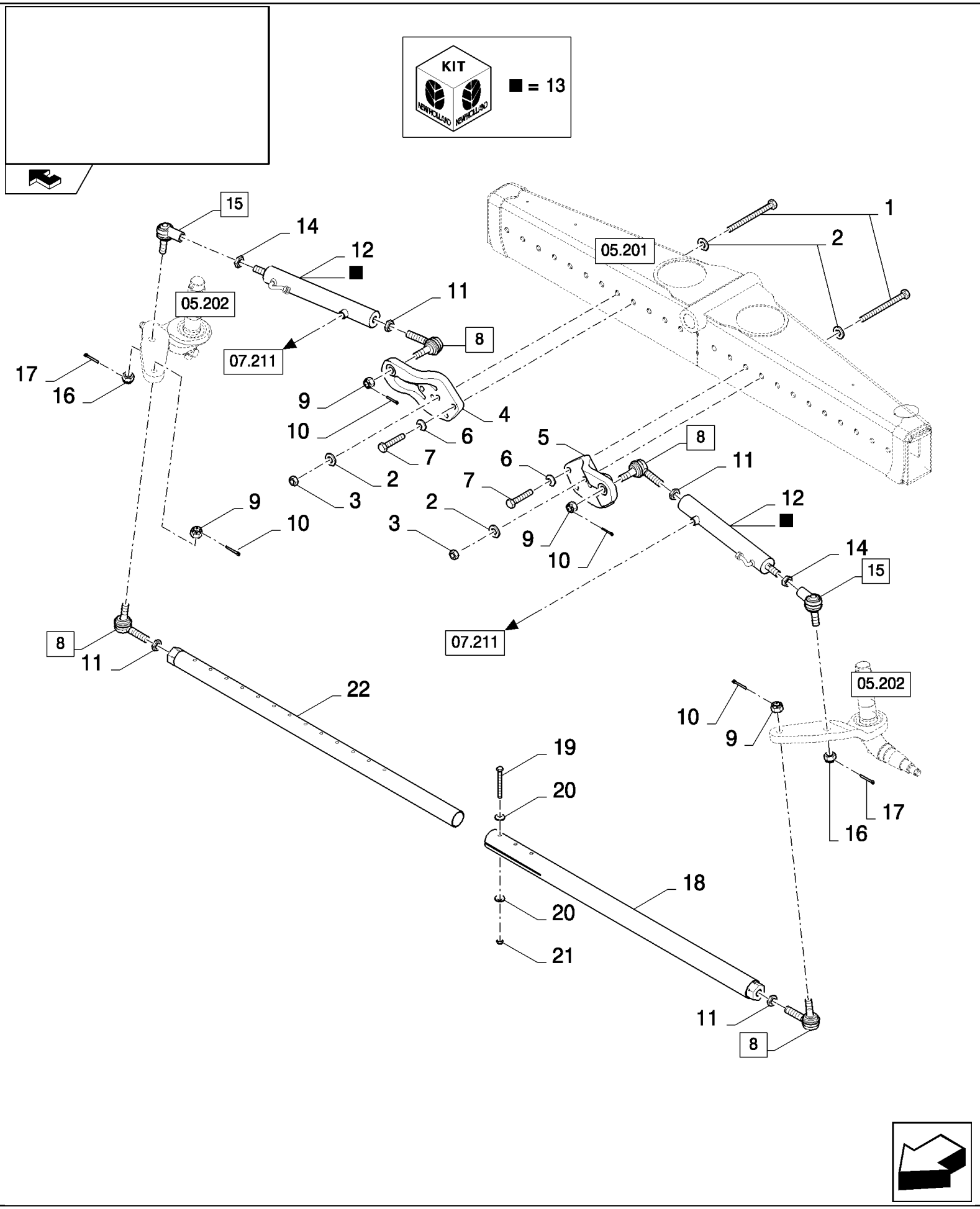

CSX7080 C659 - COMBINE (9/06-8/08)

05.203(01) ADJUSTABLE STEERING AXLE AND CYLINDERS

ссылка	Номер детали	Кол-во	Описание
1	87015582	4	BOLT, Hex, M16 x 160, 10.9, M16x150
2	394631	8	WASHER,
3	392530	4	NUT, M16, Cl 10,
4	84439012	1	SUPPORT, RH
5	84439011	1	SUPPORT, LH
6	140048	2	WASHER, SPRING, Belleville, M16,
7	120091	2	BOLT, Hex, M16 x 60, 8.8,
8	84440541	4	BALL JOINT, (9,10)
9	NSS	4	NOT SERVICED SEPARATELY,
10	NSS	4	NOT SERVICED SEPARATELY,
11	331209	4	NUT, 13/16"-16, G2,
12	84440415	2	HYDRAULIC CYLINDER, (13)
13	84026019	2	KIT, SEALS,
14	320771	2	NUT, Thin, M20 x 1.5, Cl 04,
15	84039559	2	BALL JOINT, (16,17)
16	412103	1	NUT,
17	300595	1	PIN, SPLIT (COTTER), M4 x 40,
18	84439201	1	TRACK ROD ASSY,
19	120073	3	BOLT, Hex, M10 x 80, 8.8,
20	379401	6	CLAMP,
21	412141	3	NUT, LOCK, M10 x 1.5, Cl 8,
22	84439211	1	TRACK ROD ASSY,

05.206(01) POWERED REAR AXLE

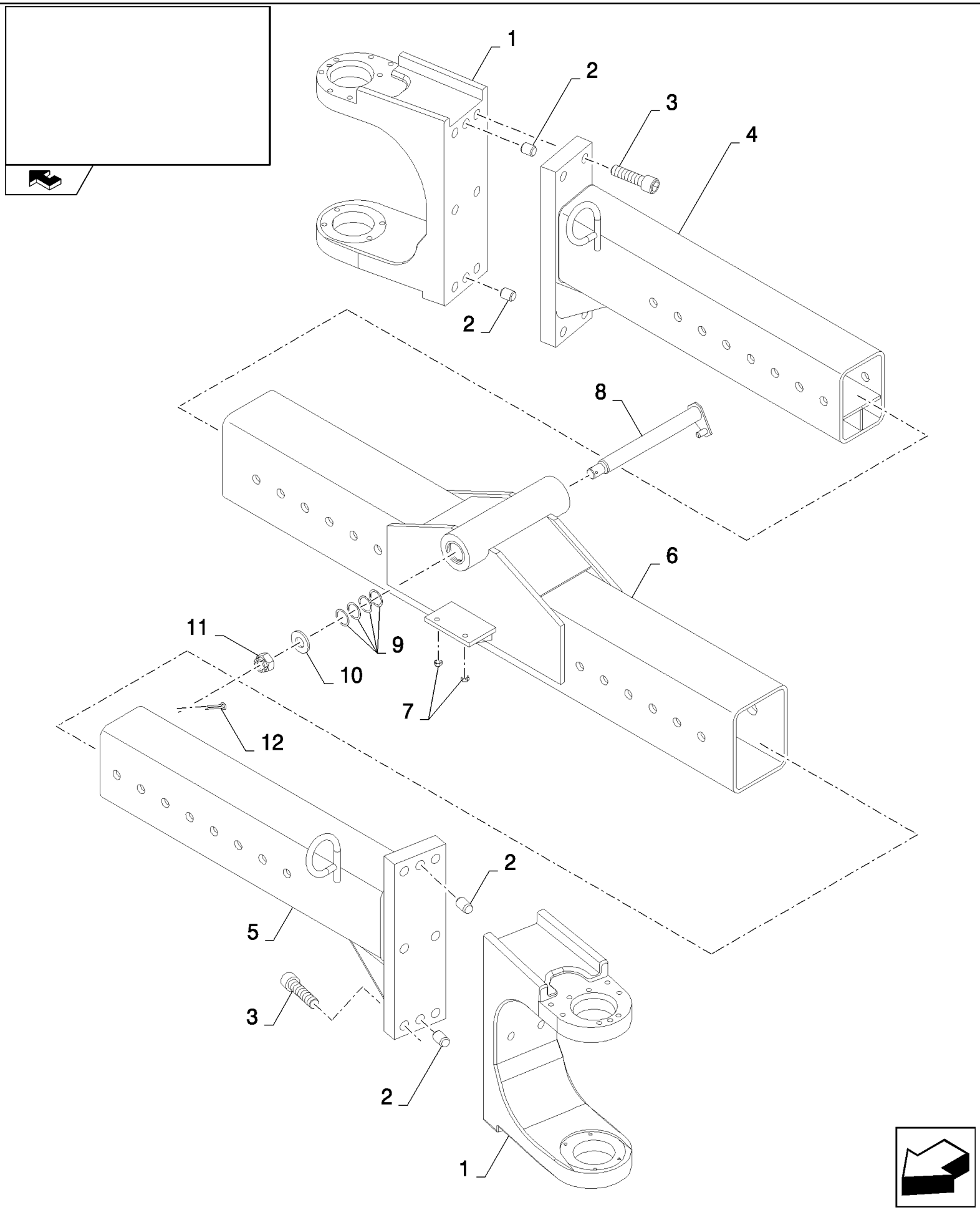

CSX7080 C659 - COMBINE (9/06-8/08)

05.206(01) POWERED REAR AXLE

ссылка	Номер детали	Кол-во	Описание
1	84800174	2	FRAME,
2	84800176	4	PIN,
3	87301555	8	SCREW, Hex Soc Hd, M20 x 80, 12.9, M20x80
4	84800171	1	AXLE, REAR, RH
5	84800170	1	AXLE, REAR, LH
6	84800169	1	AXLE, REAR,
7	9837692	2	CLAMP,
8	84077850	1	SHAFT,
9	140124	4	PLATE, ADJUSTING,
10	84334054	1	WASHER,
11	390822	1	NUT, SLOTTED, M30 x 1.5, Cl 8,
12	130016	1	PIN, SPLIT (COTTER), M6.3 x 63,

05.207(01) POWERED REAR AXLE : WHEEL DRIVE

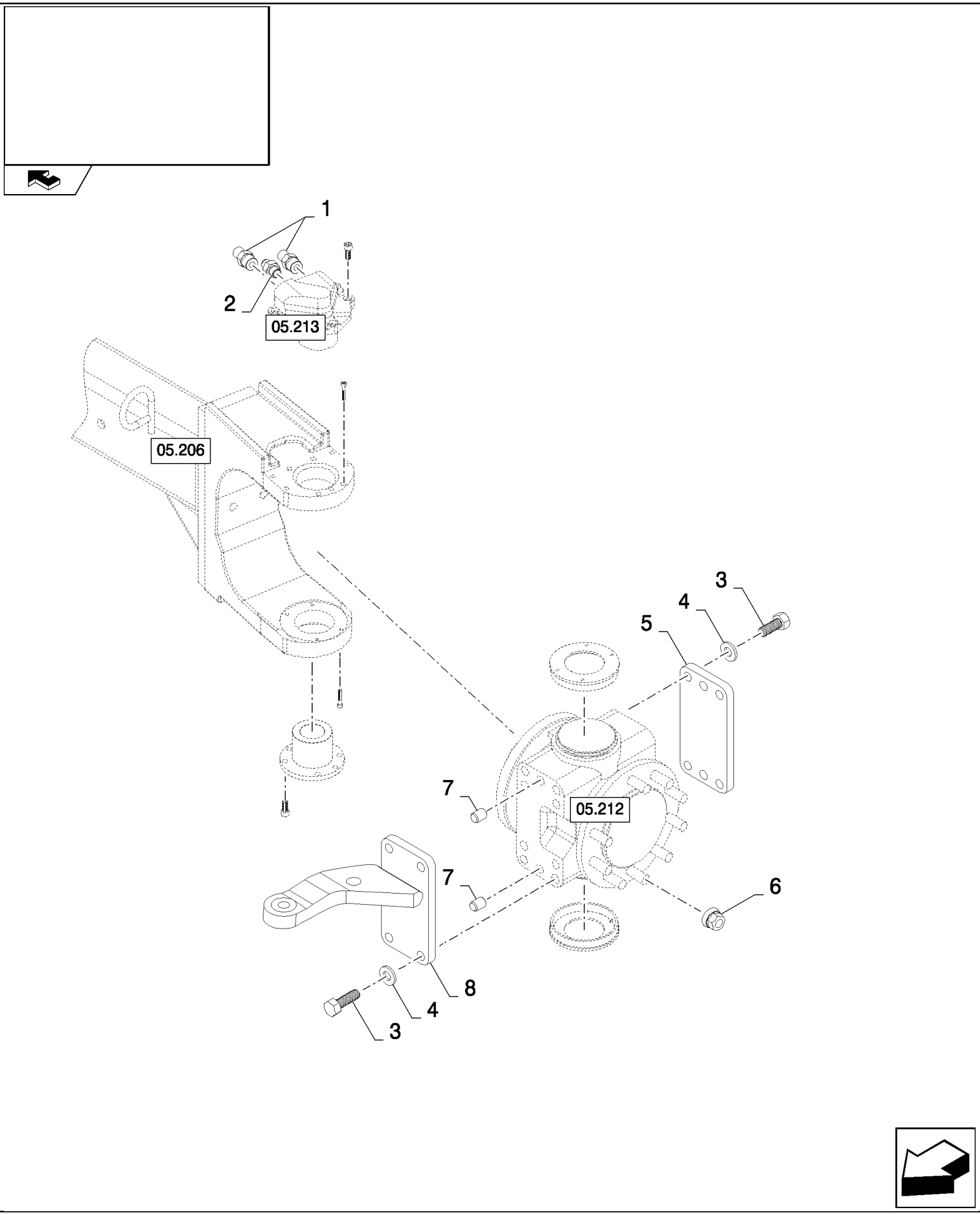

CSX7080 C659 - COMBINE (9/06-8/08)

05.207(01) POWERED REAR AXLE : WHEEL DRIVE

ссылка	Номер детали	Кол-во	Описание
1	176081	4	CONNECTOR, HYD., 3/4"-16, 37є x 1 1/16"-12, O-Ring,
2	128818	2	CONNECTOR, HYD., 3/4"-16, 37є x 3/4"-16, O-Ring,
3	9512573	16	BOLT, Hex, M20 x 40, 10.9,
4	578092	16	WASHER,
5	84800178	2	PLATE, MOUNTING,
6	9512180	20	NUT, M20
7	84800176	4	PIN,
8	84800179	1	BRACKET, LH
8	84800180	1	BRACKET, RH

05.208(01) POWERED REAR AXLE

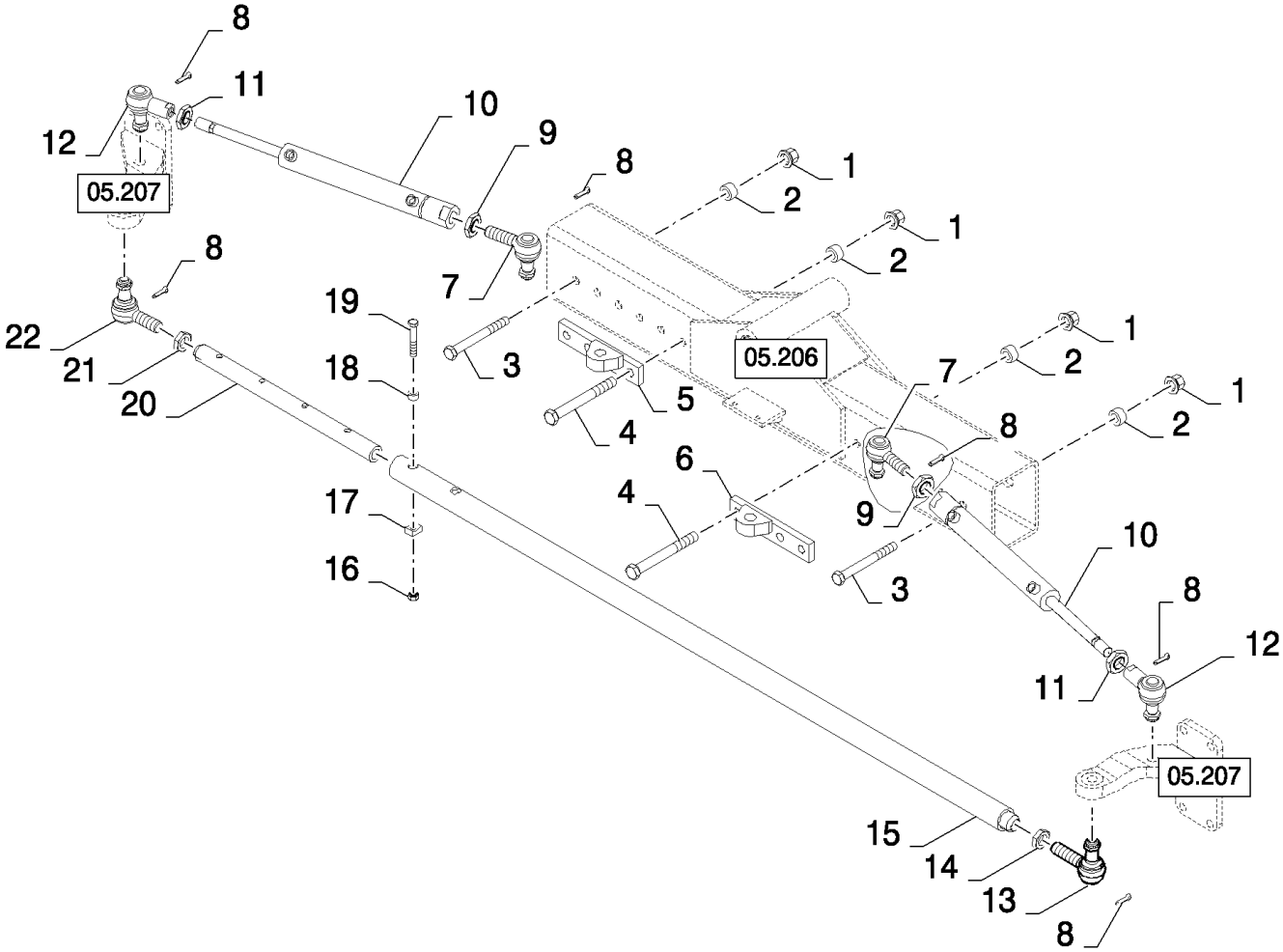

CSX7080 C659 - COMBINE (9/06-8/08)

05.208(01) POWERED REAR AXLE

ссылка	Номер детали	Кол-во	Описание
1	280375	10	NUT, LOCK, 3/4"-10, GC,
2	9512203	10	WASHER,
3	9846394	4	BOLT, Hex, 3/4"-10 x 7", G8,
4	9512205	6	SCREW,
5	84800172	1	BRACKET, RH
6	84800173	1	BRACKET, LH
7	84800184	2	BALL JOINT,
8	300401	6	PIN, SPLIT (COTTER), M2 x 40,
9	100034	2	NUT, M30 x 1.5, Cl 8,
10	84800185	2	CYLINDER STEERING,
11	100033	2	NUT, Thin, M24 x 1.5, Cl 04,
12	84800183	2	BALL JOINT,
13	9818615	1	BALL JOINT,
14	9818616	1	NUT,
15	84800182	1	TIE-ROD,
16	88871	2	NUT, LOCK, 1/2"-13, GC,
17	627347	2	CLAMP,
18	9512175	2	SPACER,
19	9818286	2	BOLT, Hex, 1/2"-13 x 3 1/2", G8,
20	84800181	1	TIE-ROD,
21	87319	1	NUT, Jam, 1 1/8"-12, G2,
22	677952	1	BALL JOINT,

05.209(01) ADDITIONAL PARTS, POWERED

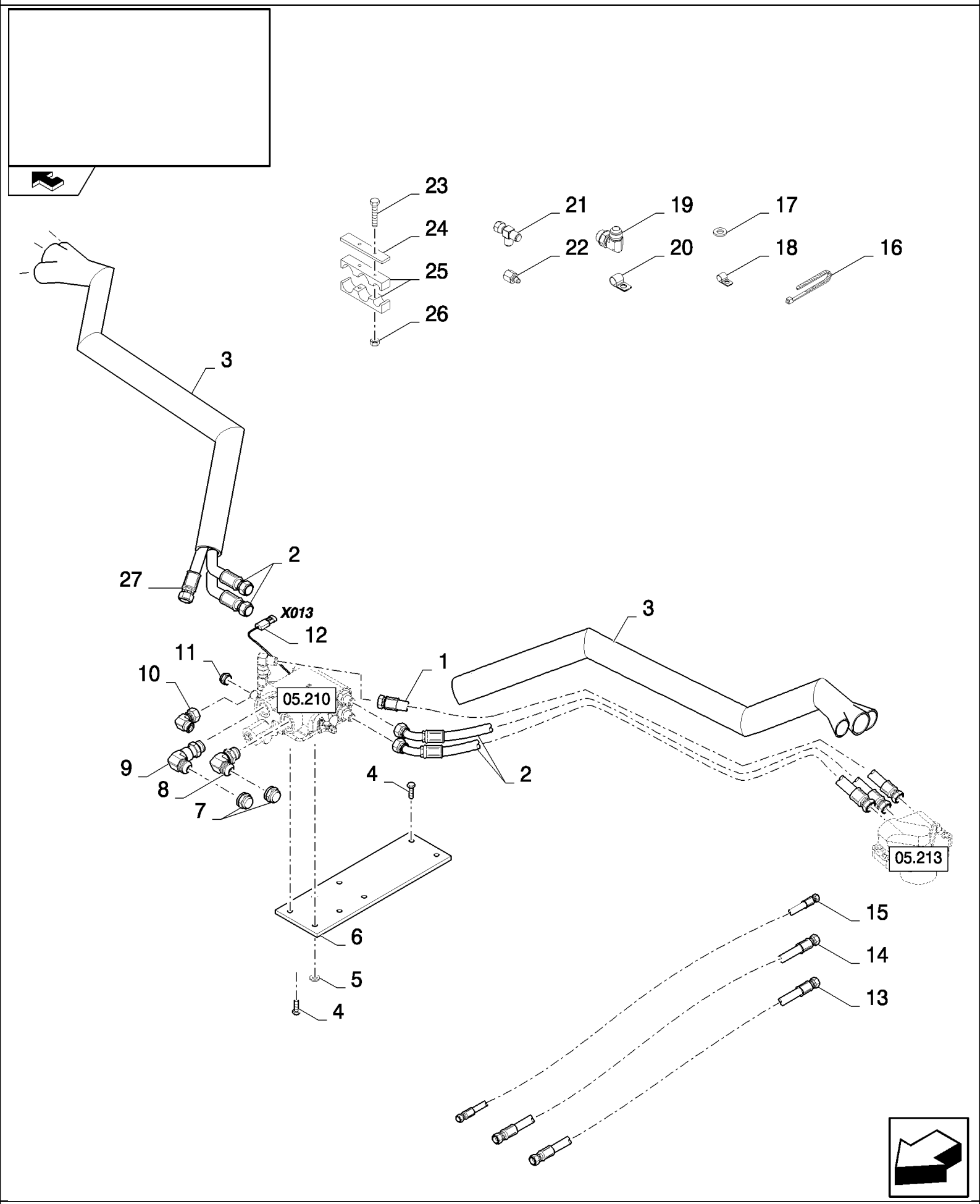

CSX7080 C659 - COMBINE (9/06-8/08)

05.209(01) ADDITIONAL PARTS, POWERED

ссылка	Номер детали	Кол-во	Описание
1	84800191	1	HOSE, L=61"
2	84800190	4	HOSE, L=51"
3	84800193	2	BEARING, NYLON,
4	86977691	4	BOLT, Hex, 3/8"-16 x 1 1/2", G8,
5	140045	2	WASHER, SPRING, Belleville, M10,
6	84800186	1	BRACKET,
7	NS	2	NOT SERVICED,
8	322894	1	ELBOW, 90є, 1 1/16"-12, 37є x 1 1/16"-12, O-Ring,
9	9512237	1	ELBOW,
10	248974	1	ELBOW, 90є, 3/4"-16, 37є x 3/4"-16, 37є Fem Sw,
11	NS	1	NOT SERVICED,
12	84446931	1	HARNESS, WIRE, , SEE FIGURE 06.556
13	84441308	1	HOSE, FLEXIBLE, L=123"
14	84807872	1	HOSE, FLEXIBLE, L=137"
15	84056198	1	HOSE, HYDRAULIC, L=150"
16	NS	28	NOT SERVICED,
17	87361	3	WASHER, 1/4", SAE,
18	84818444	2	CLAMP,
19	322894	2	ELBOW, 90є, 1 1/16"-12, 37є x 1 1/16"-12, O-Ring,
20	455556	1	CLAMP,
21	9507672	1	CONNECTION, 3 WAY,
22	9512230	1	REDUCER,
23	84807864	4	SCREW, M6x60
24	455534	2	SUPPORT,
25	455533	4	CLAMP,
26	412152	4	NUT, LOCK, M6 x 1, Cl 8.8,
27	84800192	1	HOSE, L=52"

05.210(01) POWERED REAR AXLE : VALVE

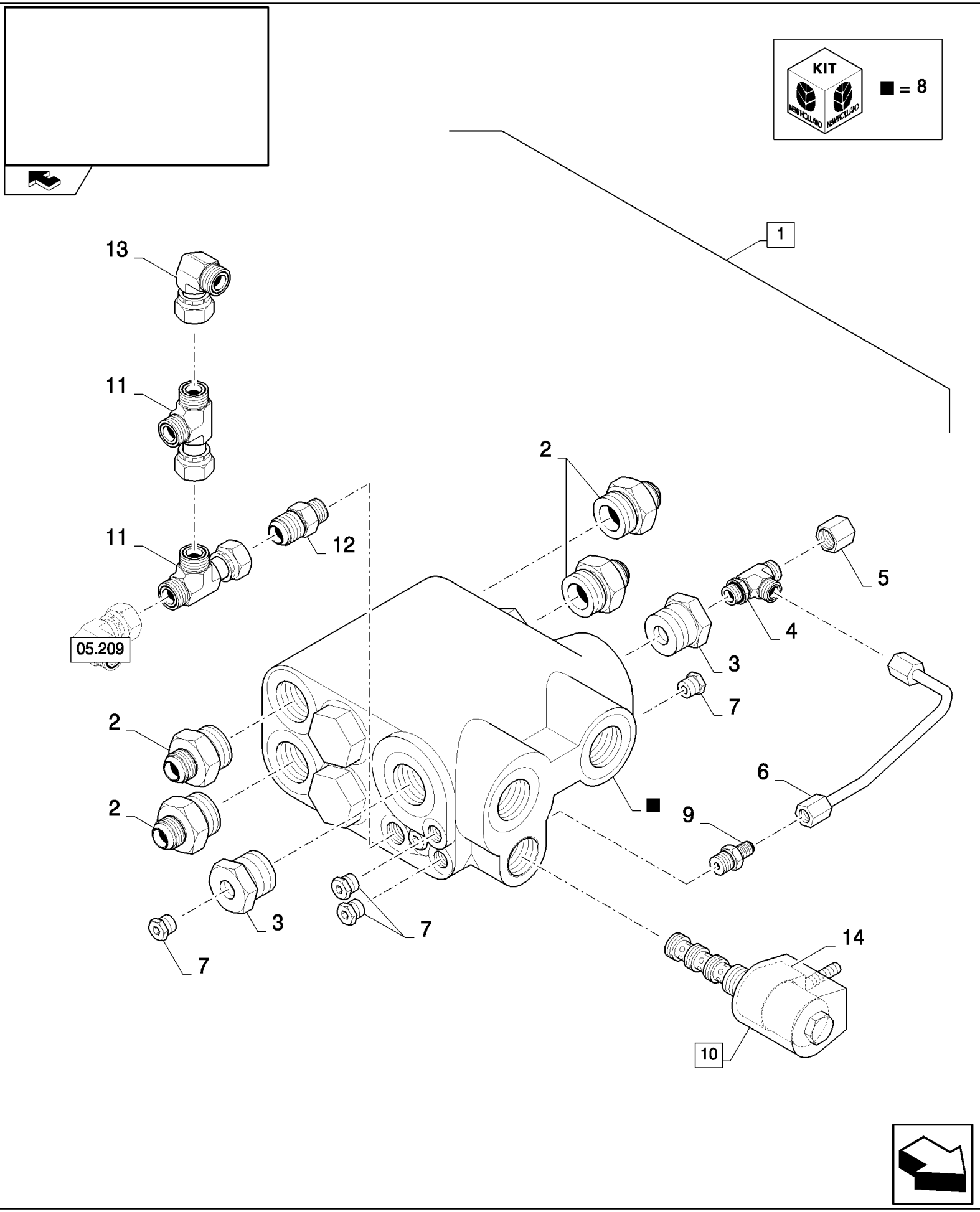

CSX7080 C659 - COMBINE (9/06-8/08)

05.210(01) POWERED REAR AXLE : VALVE

ссылка	Номер детали	Кол-во	Описание
1	84800187	1	VALVE, HYDRAULIC, (2 to 14)
2	176081	4	CONNECTOR, HYD., 3/4"-16, 37є x 1 1/16"-12, O-Ring,
3	84818470	2	CONNECTOR, HYD.,
4	9512226	1	CONNECTION, 3 WAY,
5	NS	1	NOT SERVICED,
6	9512171	1	TUBE,
7	NS	4	NOT SERVICED,
8	84800210	1	KIT, SEALS,
9	265235	1	CONNECTOR, HYD., 7/16"-20, 37є x 7/16"-20, O-Ring,
10	9512173	1	VALVE, HYDRAULIC, (14)
11	86511870	2	TEE, 37є, 3/4"-16 x 3/4"-16, Fem Sw Run,
12	84818471	1	CONNECTOR, HYD.,
13	248974	1	ELBOW, 90є, 3/4"-16, 37є x 3/4"-16, 37є Fem Sw,
14	9512196	1	ELECTROMAGNET,

05.211(01) POWERED REAR AXLE - MOUNTING KIT

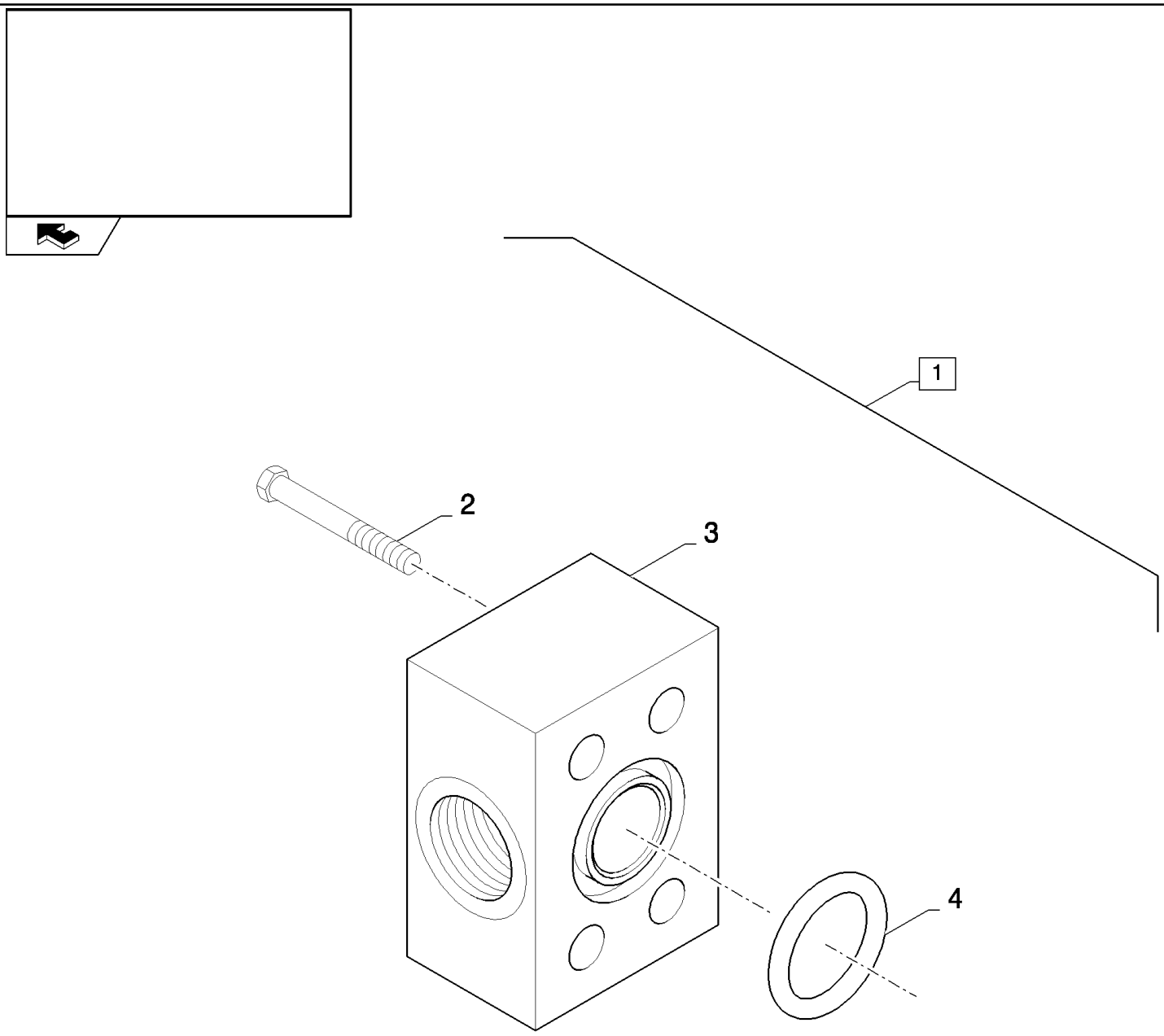

CSX7080 C659 - COMBINE (9/06-8/08)

05.211(01) POWERED REAR AXLE - MOUNTING KIT

ссылка	Номер детали	Кол-во	Описание
1	84045157	2	KIT, , FOR MOUNTING KIT 100CC
1	84053542	2	KIT, , FOR MOUNTING KIT 130CC
2	89512275	4	BOLT, , FOR MOUNTING KIT 100CC
2	9818286	4	BOLT, Hex, 1/2"-13 x 3 1/2", G8, , FOR MOUNTING KIT 130CC
3	9811684	1	ADAPTER, , FOR MOUNTING KIT 100CC
3	9818288	1	ADAPTER, , FOR MOUNTING KIT 130CC
4	353108	1	O-RING, -219, 70 Duro, 1.296" ID x .139" Thk, , FOR MOUNTING KIT 100CC
4	14464080	1	O-RING, -222, 70 Duro, 1.484" ID x .139" Thk, , FOR MOUNTING KIT 130CC

05.212(01) POWERED REAR AXLE : WHEEL MOTOR

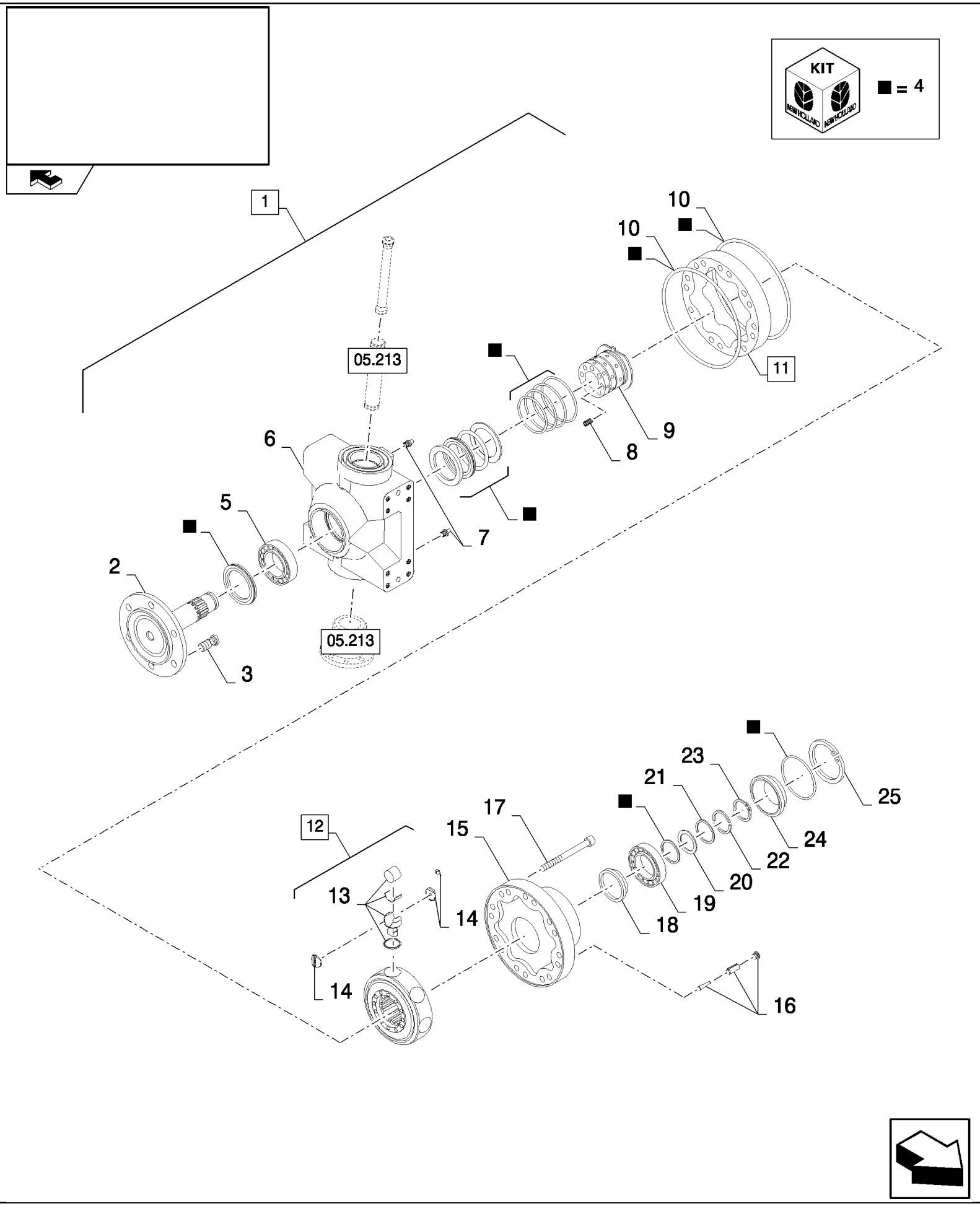

CSX7080 C659 - COMBINE (9/06-8/08)

05.212(01) POWERED REAR AXLE : WHEEL MOTOR

ссылка	Номер детали	Кол-во	Описание
1	84800175	2	MOTOR, HYDRAULIC, (2 to 25), Incl. 05.213, FOR WHEEL MOTOR 935CC
1	84800195	2	MOTOR, HYDRAULIC, (2 to 25), Incl. 05.213, FOR WHEEL MOTOR 1250CC
2	84800204	1	HUB,
3	9512182	10	STUD, M20
4	84800213	1	KIT, SEALS,
5	84018637	1	BEARING, ROLLER,
6	84817919	1	HOUSING,
7	84817929	2	NIPPLE, LUBE,
8	9512195	8	SPRING,
9	9512193	1	DISTRIBUTOR,
10	NS	2	NOT SERVICED,
11	9512192	1	CAM, (10)
12	84018630	1	ROTOR, (13,14), FOR WHEEL MOTOR 935CC
12	84800197	1	ROTOR, (13,14), FOR WHEEL MOTOR 1250CC
13	9512215	10	KIT, , FOR WHEEL MOTOR 935CC
13	84800198	10	KIT, , FOR WHEEL MOTOR 1250CC
14	84018631	1	KIT, , FOR WHEEL MOTOR 935CC
14	84800199	1	KIT, , FOR WHEEL MOTOR 1250CC
15	84817907	1	HOUSING,
16	84800205	2	PIN,
17	84069080	14	SCREW, M12x75
18	84817909	1	SPACER,
19	84817910	1	BEARING ASSY,
20	84817903	1	SPACER,
21	84817912	1	RING,
22	84817911	2	HALF-RING,
23	84817913	1	RING,
24	84817914	1	COVER,
25	84817915	1	CIRCLIP,

05.213(01) POWERED REAR AXLE : WHEEL MOTOR

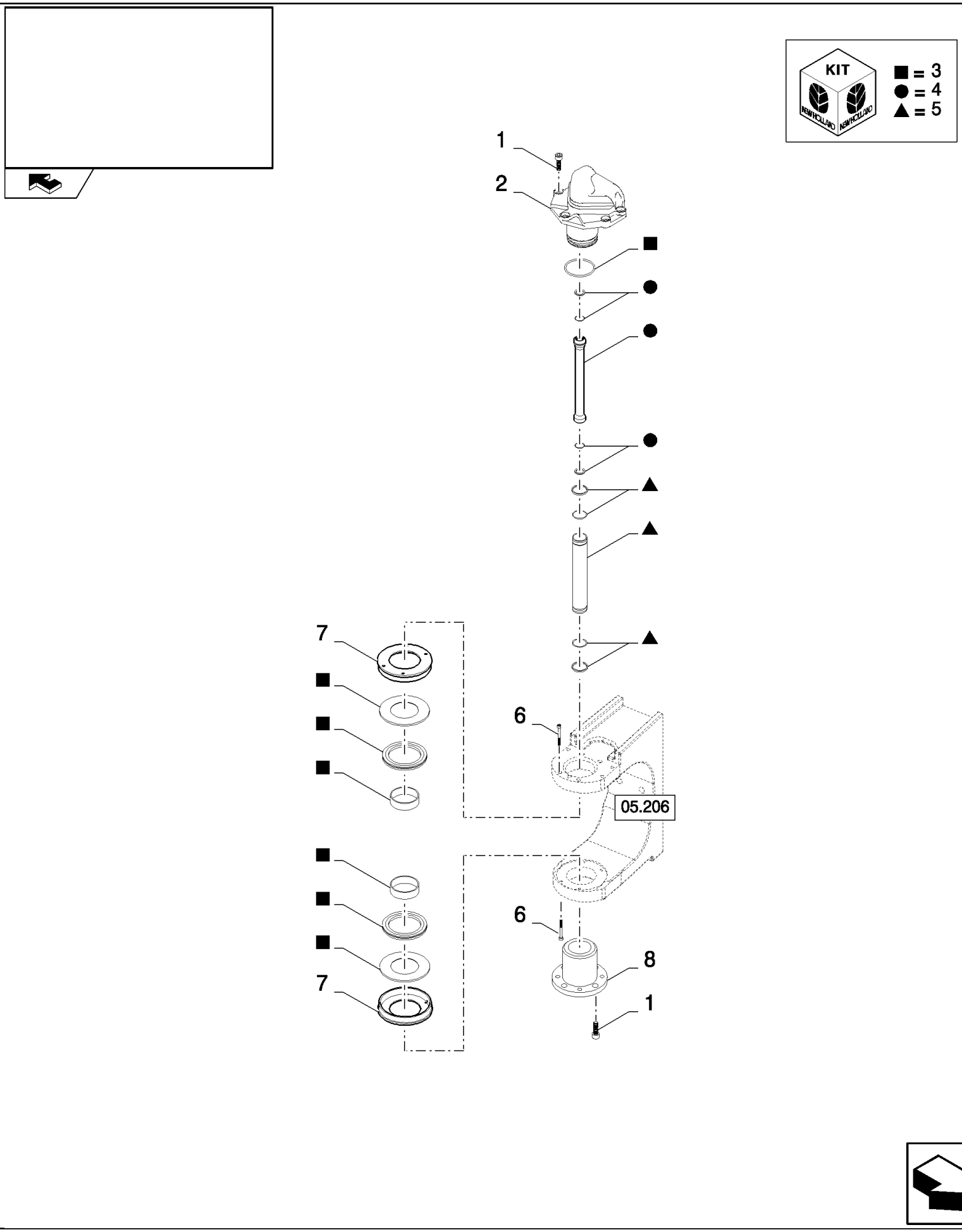

CSX7080 C659 - COMBINE (9/06-8/08)

05.213(01) POWERED REAR AXLE : WHEEL MOTOR

ссылка	Номер детали	Кол-во	Описание
1	86508097	9	SCREW, Hex Soc Hd, M10 x 25, 12.9,
2	84817895	1	HUB,
3	84800211	1	KIT,
4	84800213	1	KIT, SEALS,
5	84800212	1	KIT, SEALS,
6	9515561	8	SCREW, Hex Soc Hd, M6 x 35, 12.9,
7	84817924	2	COVER,
8	84800194	1	PIN,

ELECTRICAL SYSTEM | **SYSTÈME ELECTRIQUE** | **SISTEMA ELÉCTRICO** | **ELECTRISK SYSTEM**

SISTEMA DI ELETTRICO | **ELEKTRISCHES SYSTEME** | **SISTEMA ELÉCTRICA** | **ELEKTRISCH SYSTEEM**

SEC. 6

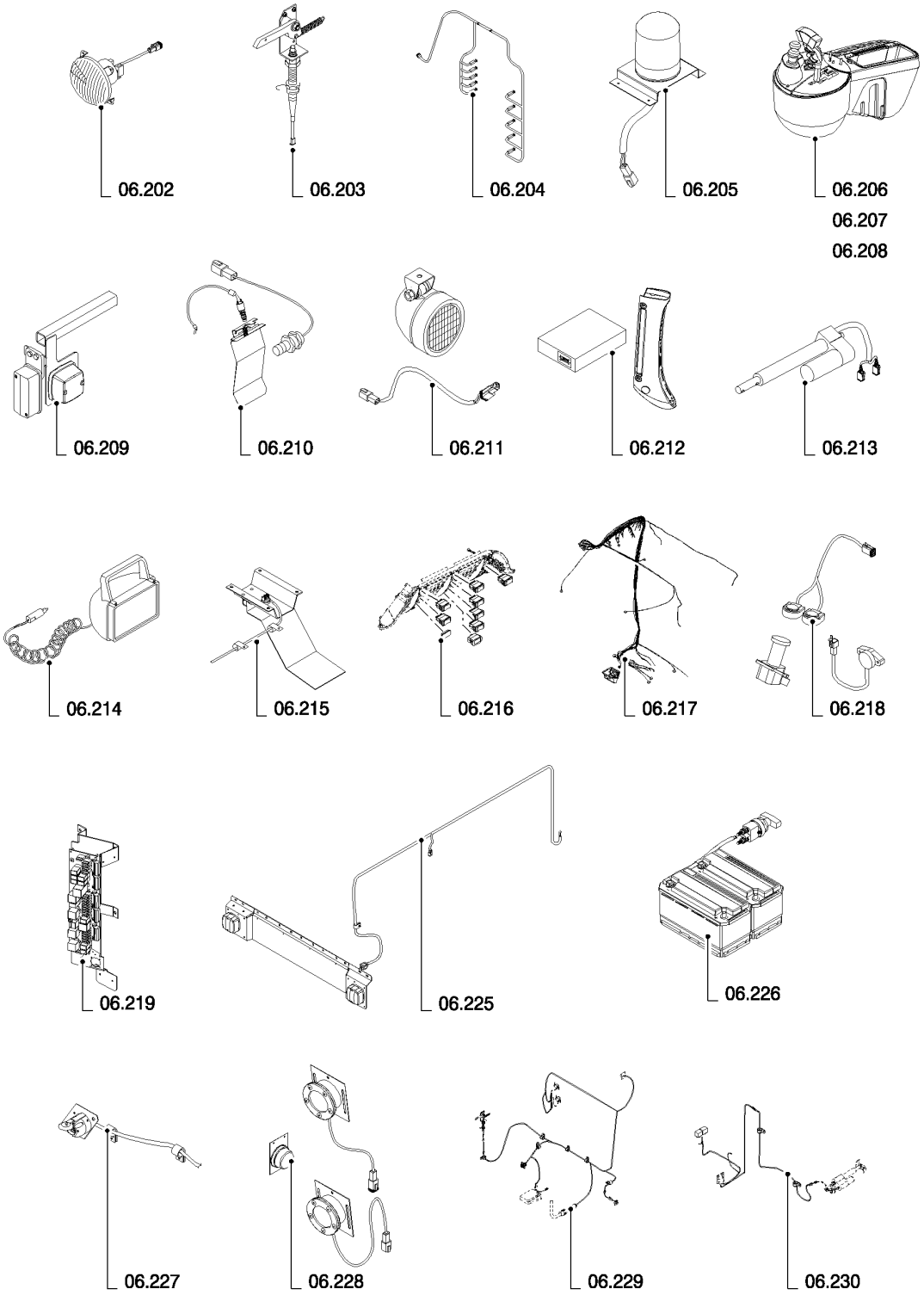

ссылка	Номер детали	Кол-во	Описание

ELECTRICAL SYSTEM | **SYSTÈME ELECTRIQUE** | **SISTEMA ELÉCTRICO** | **ELECTRISK SYSTEM**

SISTEMA DI ELETTRICO | **ELEKTRISCHES SYSTEME** | **SISTEMA ELÉCTRICA** | **ELEKTRISCH SYSTEEM**

SEC. 6

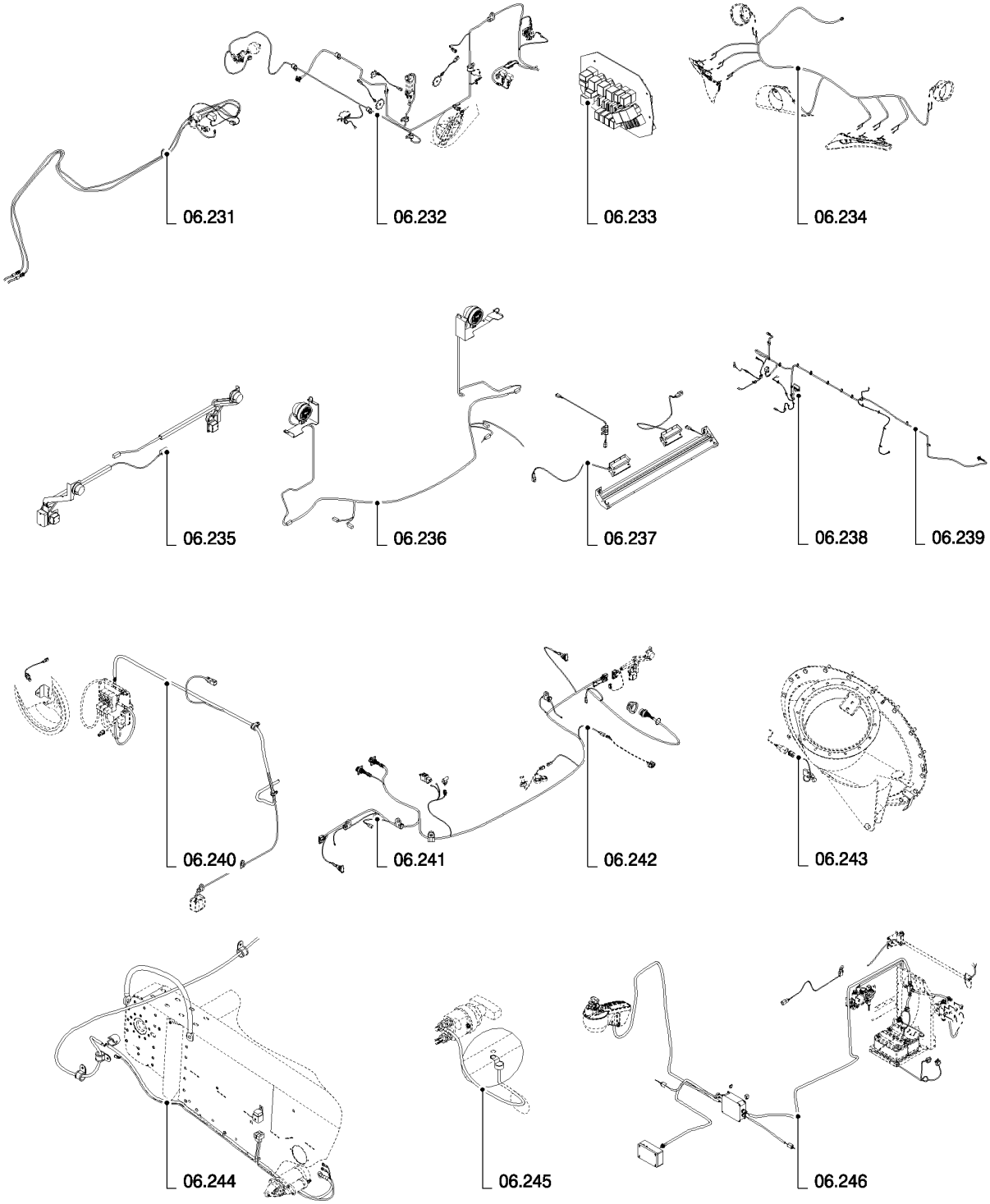

ссылка	Номер детали	Кол-во	Описание

ELECTRICAL SYSTEM **SYSTÈME ELECTRIQUE** **SISTEMA ELÉCTRICO** **ELECTRISK SYSTEM**

SISTEMA DI ELETTRICO **ELEKTRISCHES SYSTEME** **SISTEMA ELÉCTRICA** **ELEKTRISCH SYSTEEM**

SEC. 6

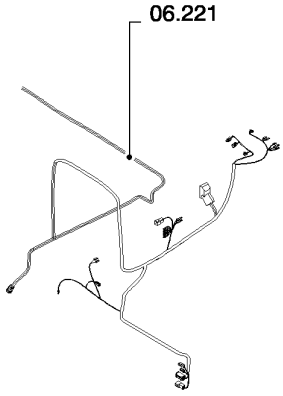

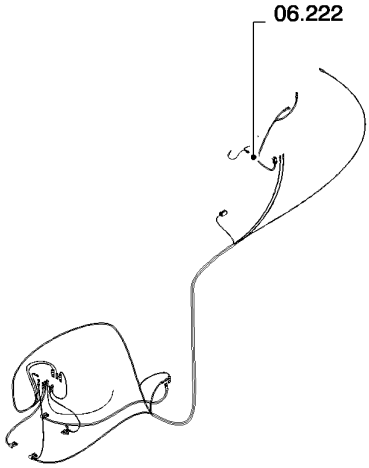

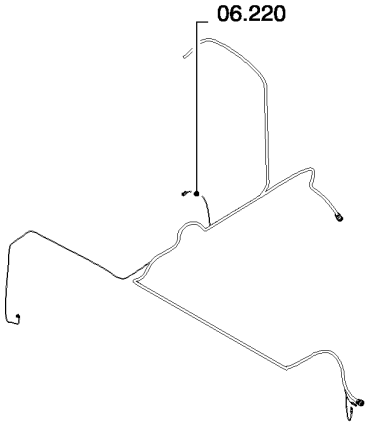

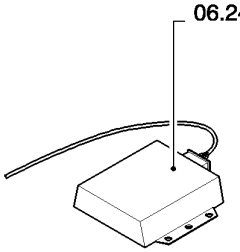

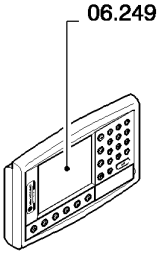

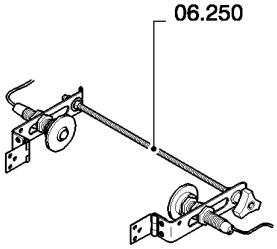

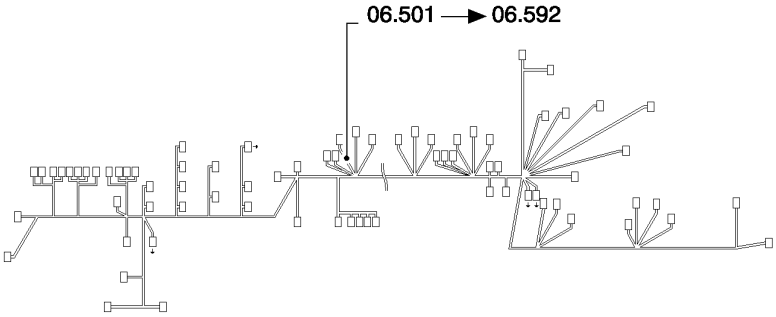

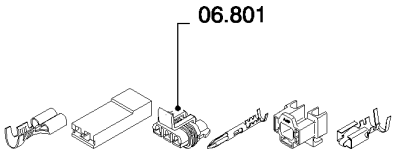

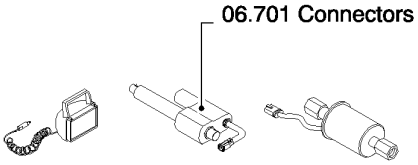

ссылка	Номер детали	Кол-во	Описание

06.202(01) HEADLIGHTS

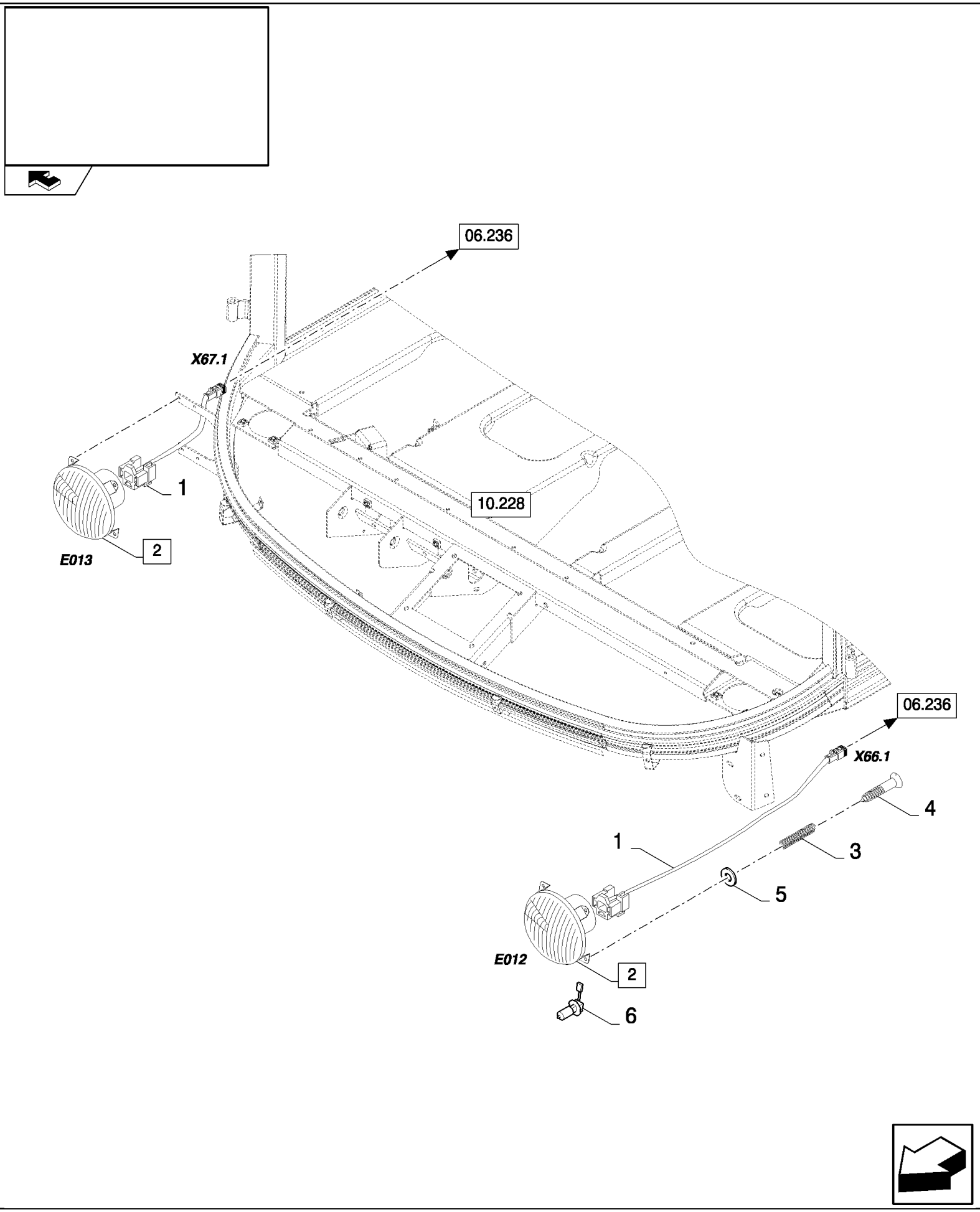

06.202(01) HEADLIGHTS

ссылка	Номер детали	Кол-во	Описание
1	84437362	2	HARNESS, WIRE, , SEE FIGURE 06.532/06.533
2	84067914	2	HEADLAMP, (3 to 6)
3	84429835	4	SPRING,
4	84429834	4	SCREW,
5	9824840	4	WASHER, M4,
6	446592	1	BULB,

06.202(A 01) HEADLIGHTS - FOR UK

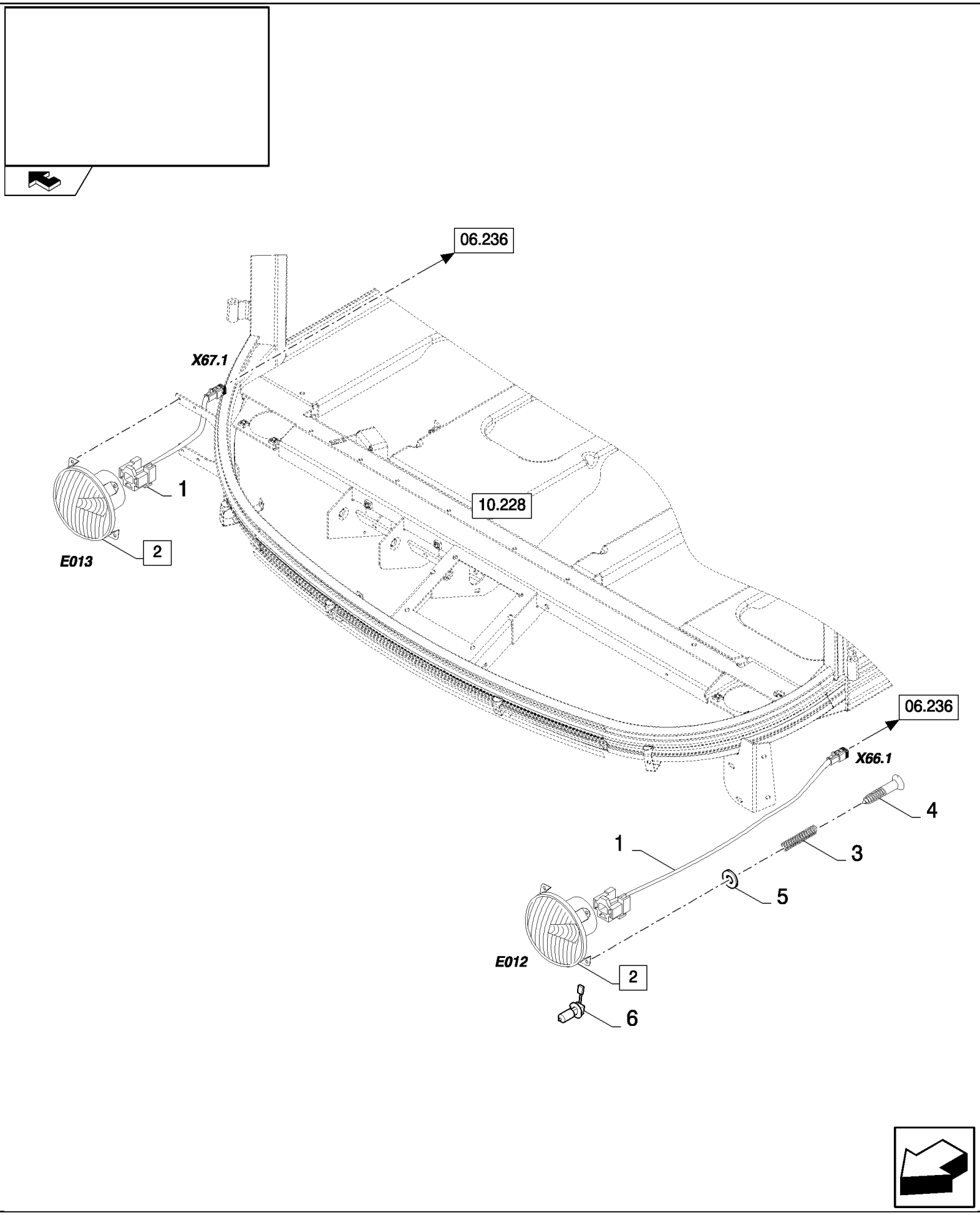

CSX7080 C659 - COMBINE (9/06-8/08)

06.202(A 01) HEADLIGHTS - FOR UK

ссылка	Номер детали	Кол-во	Описание
1	84437362	2	HARNESS, WIRE, , SEE FIGURE 06.532/06.533
2	84067913	2	HEADLAMP, (3 to 6)
3	84429835	4	SPRING,
4	84429834	4	SCREW,
5	89824840	4	WASHER,
6	446592	1	BULB,

06.203(01) FEEDER ANGLE SENSOR

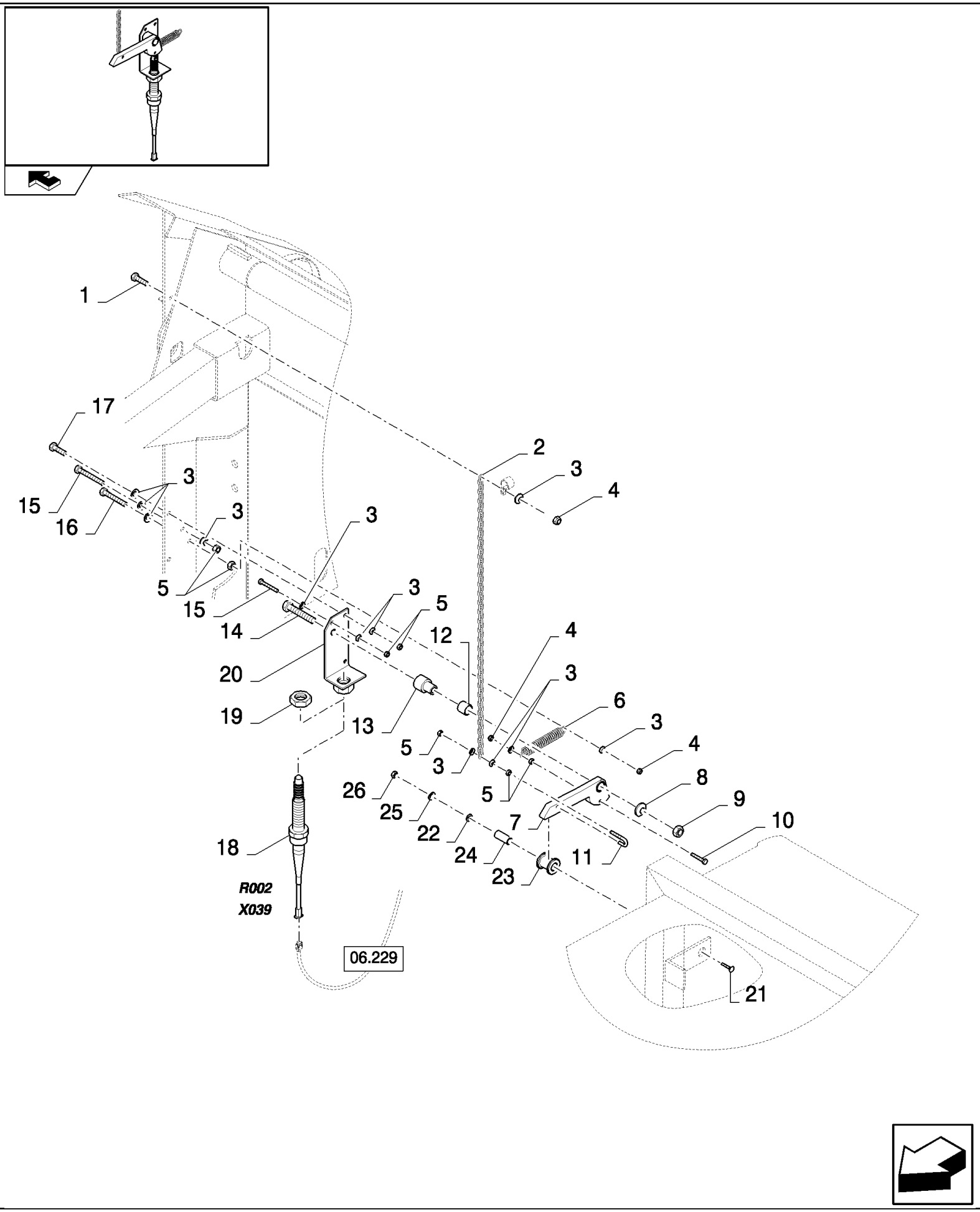

CSX7080 C659 - COMBINE (9/06-8/08)

06.203(01) FEEDER ANGLE SENSOR

ссылка	Номер детали	Кол-во	Описание
1	86977786	1	BOLT, Hex, M6 x 25, 8.8,
2	84439869	1	CHAIN,
3	322357	14	WASHER, SPRING, Belleville, M6,
4	412152	7	NUT, LOCK, M6 x 1, Cl 8.8,
5	9706755	8	NUT, M6, Cl 8,
6	180071	1	SPRING,
7	84437875	1	CAM,
8	140046	1	WASHER, Belleville, M12,
9	9706685	1	NUT, M12, Cl 8,
10	86977789	1	SCREW, Hex, M6 x 35, 8.8,
11	359726	1	HOOK,
12	420761	1	BUSHING,
13	84439607	1	BUSHING,
14	9706693	1	BOLT, Hex, M12 x 60, 8.8,
15	412559	2	BOLT, Hex, M6 x 50, 8.8, Full Thd, M6x50
16	120102	1	SCREW, Hex, M6 x 40, 8.8, Full Thd,
17	120100	2	BOLT, Hex, M6 x 20, 8.8,
18	9513732	1	SENSOR,
19	100033	1	NUT, Thin, M24 x 1.5, Cl 04,
20	84439808	1	BRACKET,
21	374894	1	BOLT, CARRIAGE, Short NK, M10 x 70, Cl8.8,
22	140042	1	WASHER, M10 x 34 x 3,
23	9815357	1	ROLLER,
24	9815355	1	SPACER,
25	140045	1	WASHER, SPRING, Belleville, M10,
26	100016	1	NUT, M10, Cl 8,

06.204(B 01) HARNESS FOR STACK VALVE, FOR HYDRAULIC REVERSER AND LATERAL FLOTATION

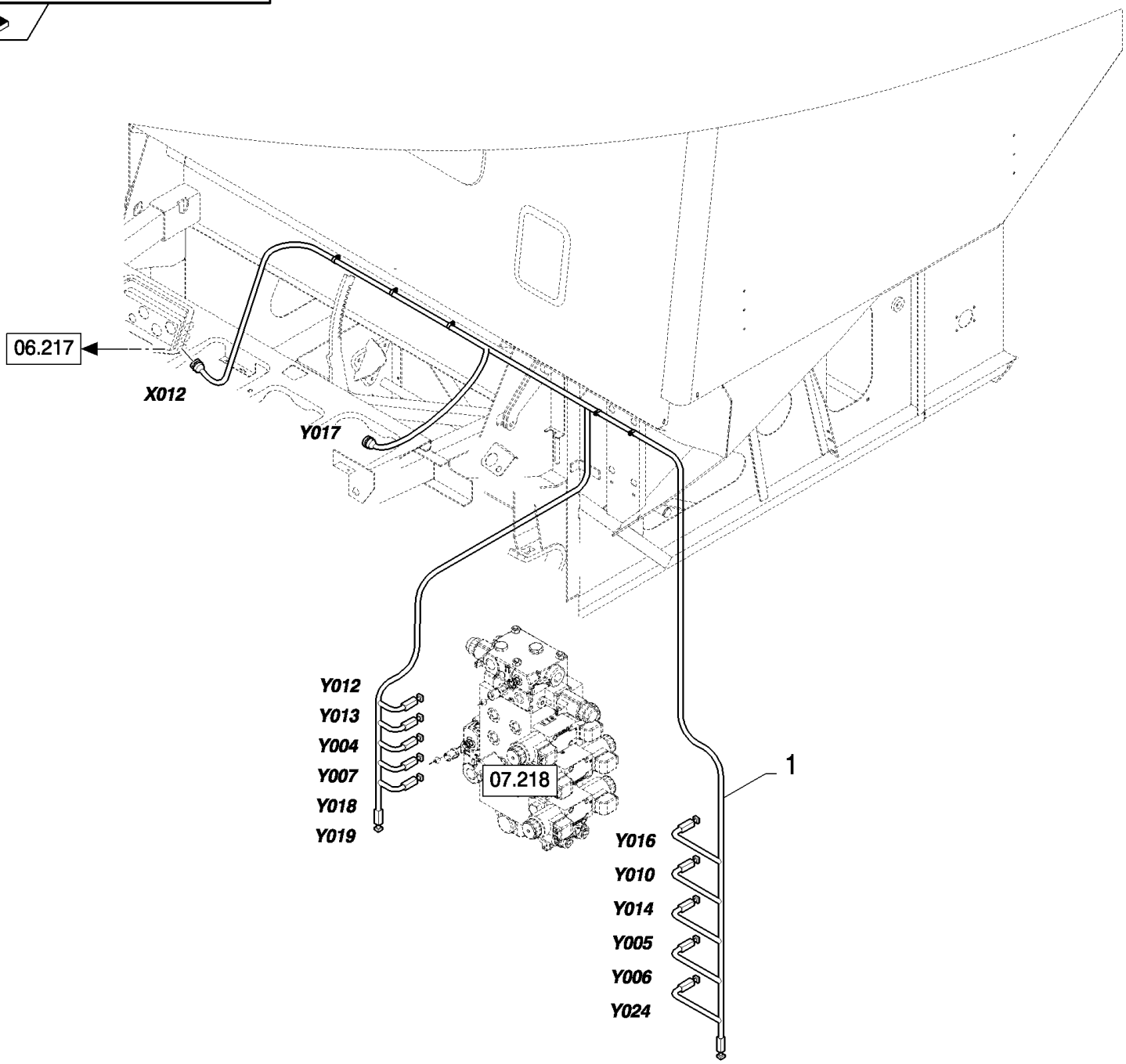

06.204(B 01) HARNESS FOR STACK VALVE, FOR HYDRAULIC REVERSER AND LATERAL FLOTATION

ссылка	Номер детали	Кол-во	Описание
1	87368619	1	HARNESS, WIRE, , SEE FIGURE 06.583
2	84818444	3	CLAMP,
3	9512290	4	RIVET,
4	9837692	2	CLAMP,

06.205(01) REAR BEACON LIGHT

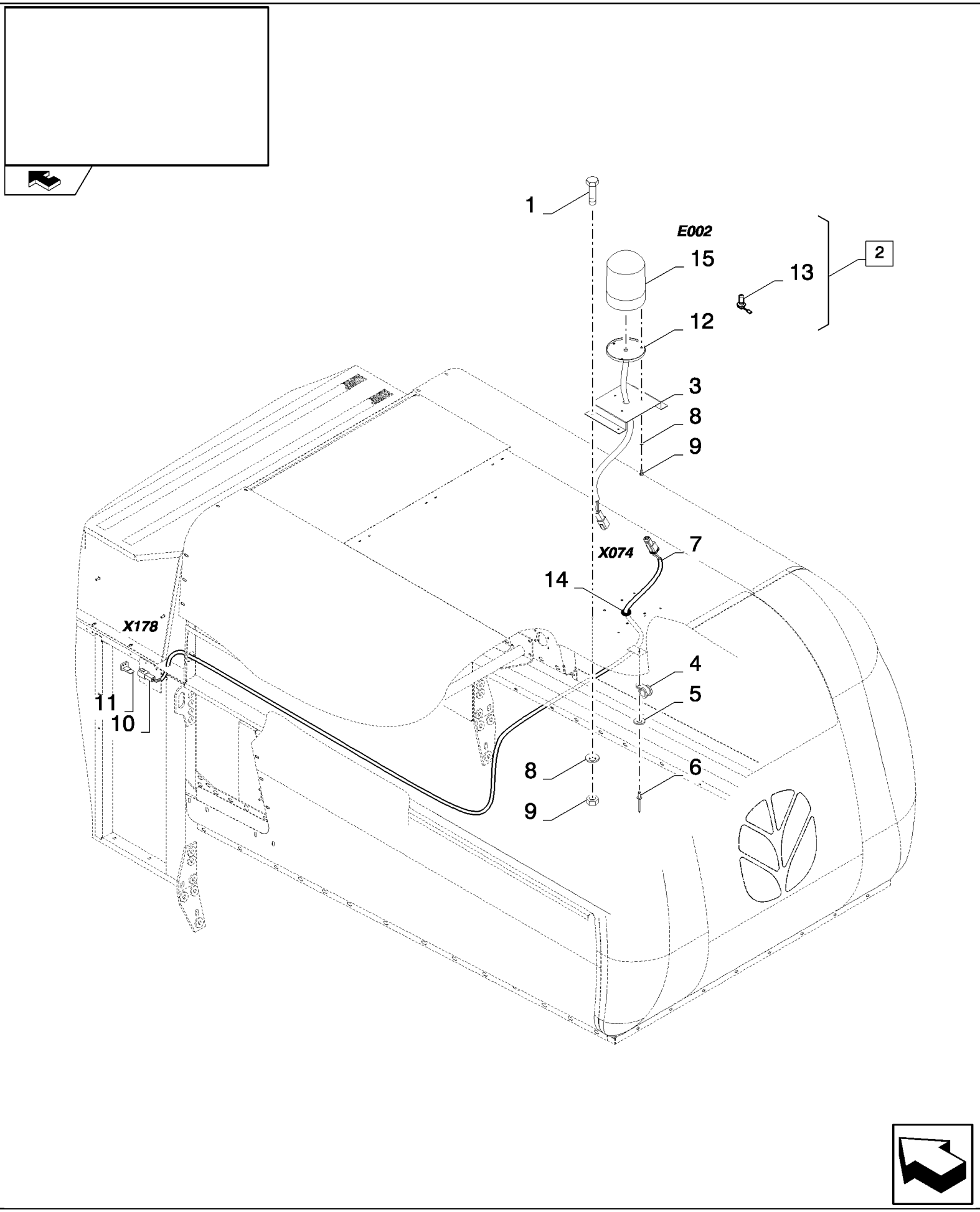

CSX7080 C659 - COMBINE (9/06-8/08)

06.205(01) REAR BEACON LIGHT

ссылка	Номер детали	Кол-во	Описание
1	120100	4	BOLT, Hex, M6 x 20, 8.8,
2	87050694	1	BEACON, (12,13,15), SEE FIGURE 06.701
3	84439613	1	SUPPORT,
4	9507807	3	CLAMP, , BSN C611
4	9507807	1	CLAMP, , ASN D612
5	322356	3	WASHER, 5MM, BSN C611
5	322356	1	WASHER, , ASN D612
6	89512289	3	RIVET, , BSN C611
6	89512289	1	RIVET, , ASN D612
7	84437323	1	HARNESS, WIRE, , SEE FIGURE 06.529
8	322357	7	WASHER, SPRING, Belleville, M6,
9	9706755	7	NUT, M6, Cl 8,
10	84074630	1	CONNECTOR, WIRE,
11	86500166	1	PLUG,
12	NSS	1	NOT SERVICED SEPARATELY, SEAL
13	86616248	1	BULB, #HI, 55w,
14	336152	1	GROMMET,
15	87746025	1	GLASS,

06.206(01) RIGHT HAND CONSOLE

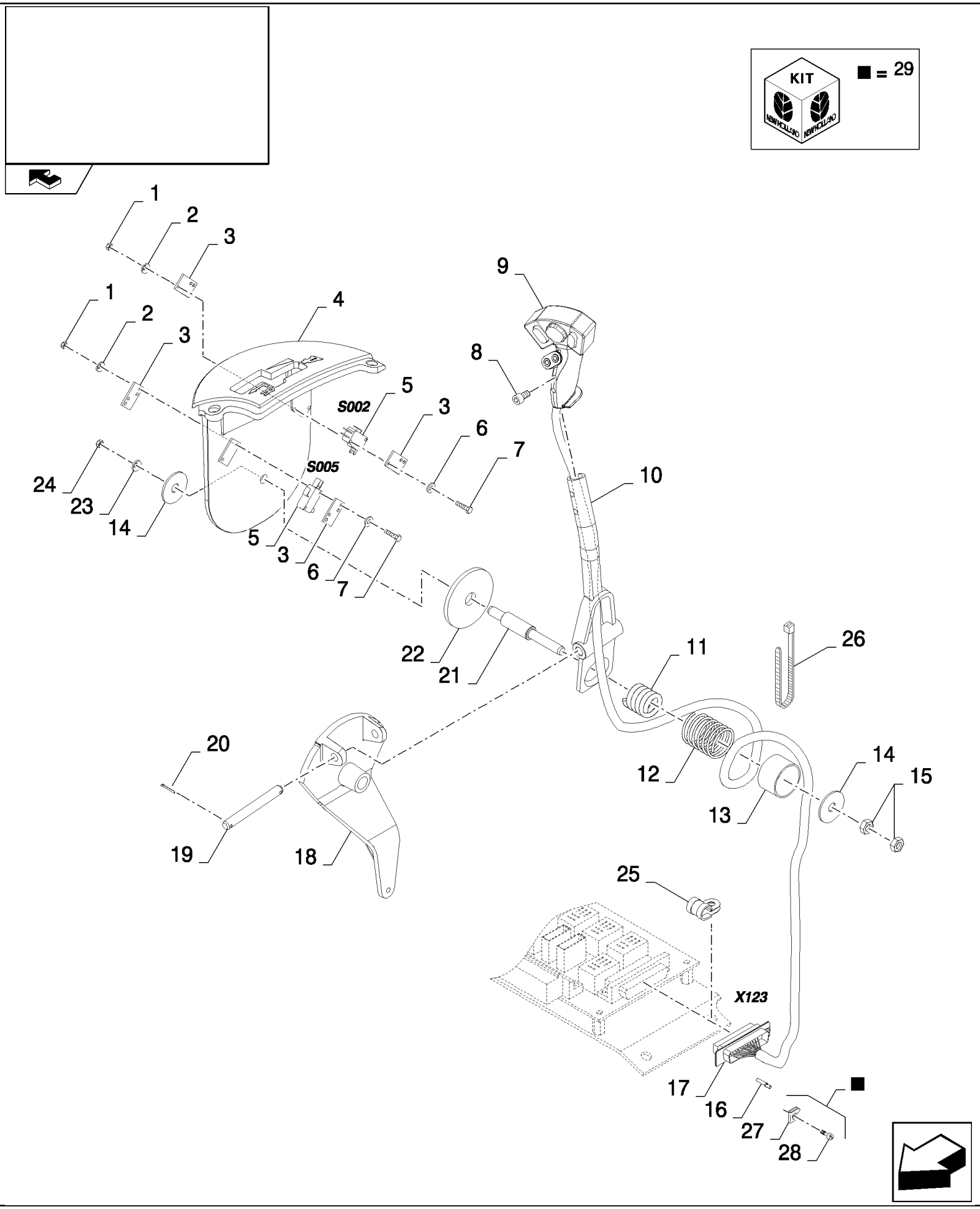

CSX7080 C659 - COMBINE (9/06-8/08)

06.206(01) RIGHT HAND CONSOLE

ссылка	Номер детали	Кол-во	Описание
1	86508812	4	NUT, M3, Cl 8,
2	412547	4	WASHER, Serr, M3, 3MM
3	84002065	4	PLATE,
4	84320424	1	COVER,
5	399159	2	SWITCH,
6	412548	4	WASHER, 3MM
7	9839301	4	SCREW, Cross Pan Hd, M3 x 35,
8	89819756	2	SCREW, M4x8
9	84100239	1	HANDLE,
10	84814235	1	HANDLE,
11	320502	1	SPRING,
12	750881	1	SPRING,
13	84007406	1	BUSHING,
14	140219	2	WASHER,
15	84807411	2	NUT, Thin, M10 x 1.5, Cl 04,
16	84018300	20	CONNECTOR, HYD.,
17	84018301	1	BLOCK, CONNECTING,
18	84400377	1	CONNECTION, SWIVEL,
19	412102	1	PIN,
20	130003	2	PIN, SPLIT (COTTER), M3.2 x 20,
21	9819970	1	SHAFT,
22	84056641	1	DISC,
23	140045	1	WASHER, SPRING, Belleville, M10,
24	100016	1	NUT, M10, Cl 8,
25	9507809	1	CLAMP,
26	323597	1	STRAP, CABLE, M9 x 165 or M5 x 197,
27	NSS	1	NOT SERVICED SEPARATELY,
28	NSS	1	NOT SERVICED SEPARATELY,
29	84018302	1	KIT, (27, 28)

06.207(01) RIGHT HAND CONSOLE

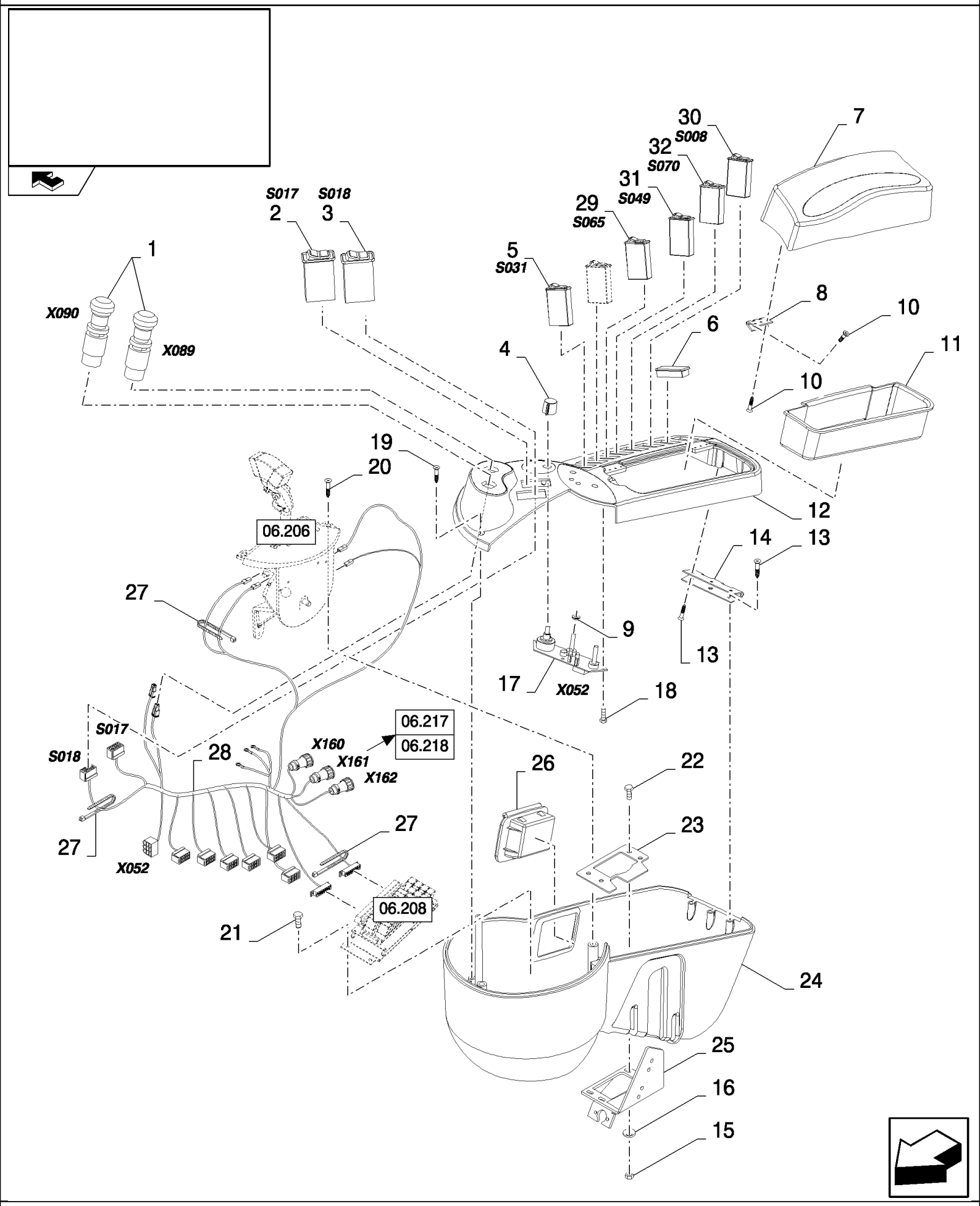

CSX7080 C659 - COMBINE (9/06-8/08)

06.207(01) RIGHT HAND CONSOLE

ссылка	Номер детали	Кол-во	Описание
1	82014977	2	SWITCH, M8x25
2	84320658	1	SWITCH, DRUM VARIATOR
3	84320659	1	SWITCH, FAN VARIATOR
4	9819758	3	KNOB,
5	84320654	1	SWITCH, SAFETY ON THE ROAD
6	84807276	7	COVER,
7	84320427	1	ARMREST,
8	84441102	2	HINGE,
9	335315	4	GROMMET,
10	84441761	12	SCREW,
11	84320426	1	BOX,
12	84320422	1	HOUSING,
13	9835804	6	SCREW,
14	84441100	1	HINGE,
15	9706690	4	NUT, M8, Cl 8,
16	322358	4	WASHER, SPRING, Belleville, M8,
17	84077817	1	BOARD, PRINTED CIRCUIT,
18	385683	3	BOLT, Hex, M4 x 10, 8.8, Full Thd,
19	412477	2	SCREW, Cross Oval Hd, M4 x 25, M4x25
20	300580	2	SCREW, Hex Flat Hd, M6 x 16, 4.8, M6x16
21	86508568	4	SCREW, Hex, M6 x 16, 8.8,
22	43127	4	BOLT, Hex, M8 x 25, 8.8,
23	84440905	1	PLATE,
24	84320423	1	HOUSING,
25	84443568	1	SUPPORT, , BSN C607
25	87677984	4	PLATE, MOUNTING, , ASN D608
26	89990474	1	ASH TRAY,
27	591182	4	BAND,
28	87370098	1	HARNESS, WIRE,
29	84320660	1	SWITCH, REEL SYN, SEE FIGURE 06.576
30	84806859	1	SWITCH, 4 WHEEL DRIVE
31	84320655	1	SWITCH, SPREADPLATES
32	84400442	1	SWITCH, VERTICAL KNIFE

06.207(A 01) RIGHT HAND CONSOLE

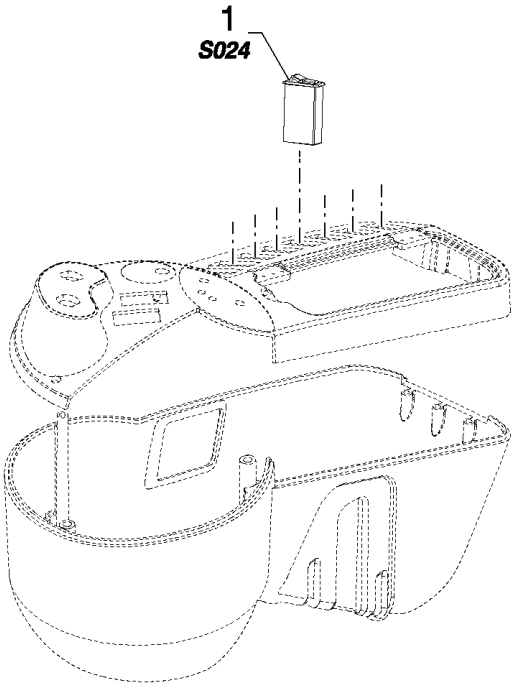

CSX7080 C659 - COMBINE (9/06-8/08)

06.207(A 01) RIGHT HAND CONSOLE

ссылка	Номер детали	Кол-во	Описание
1	87378255	1	SWITCH, Electrical concave control

06.207(B 01) RIGHT HAND CONSOLE

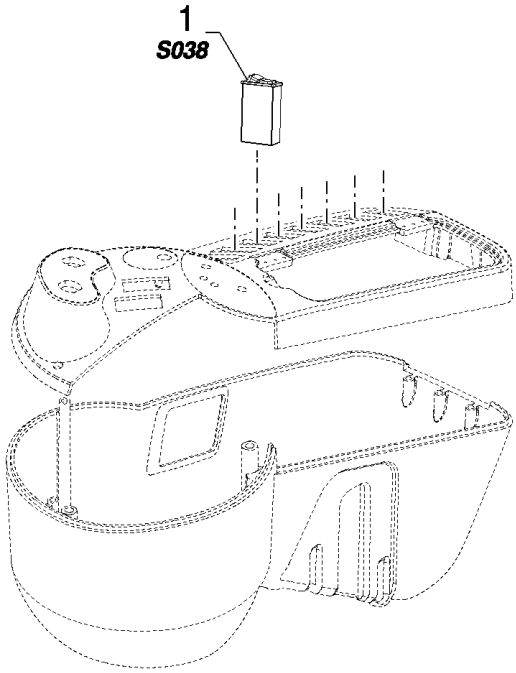

CSX7080 C659 - COMBINE (9/06-8/08)

06.207(B 01) RIGHT HAND CONSOLE

ссылка	Номер детали	Кол-во	Описание
1	87378253	1	SWITCH, Feeder variator

06.208(01) RIGHT HAND CONSOLE

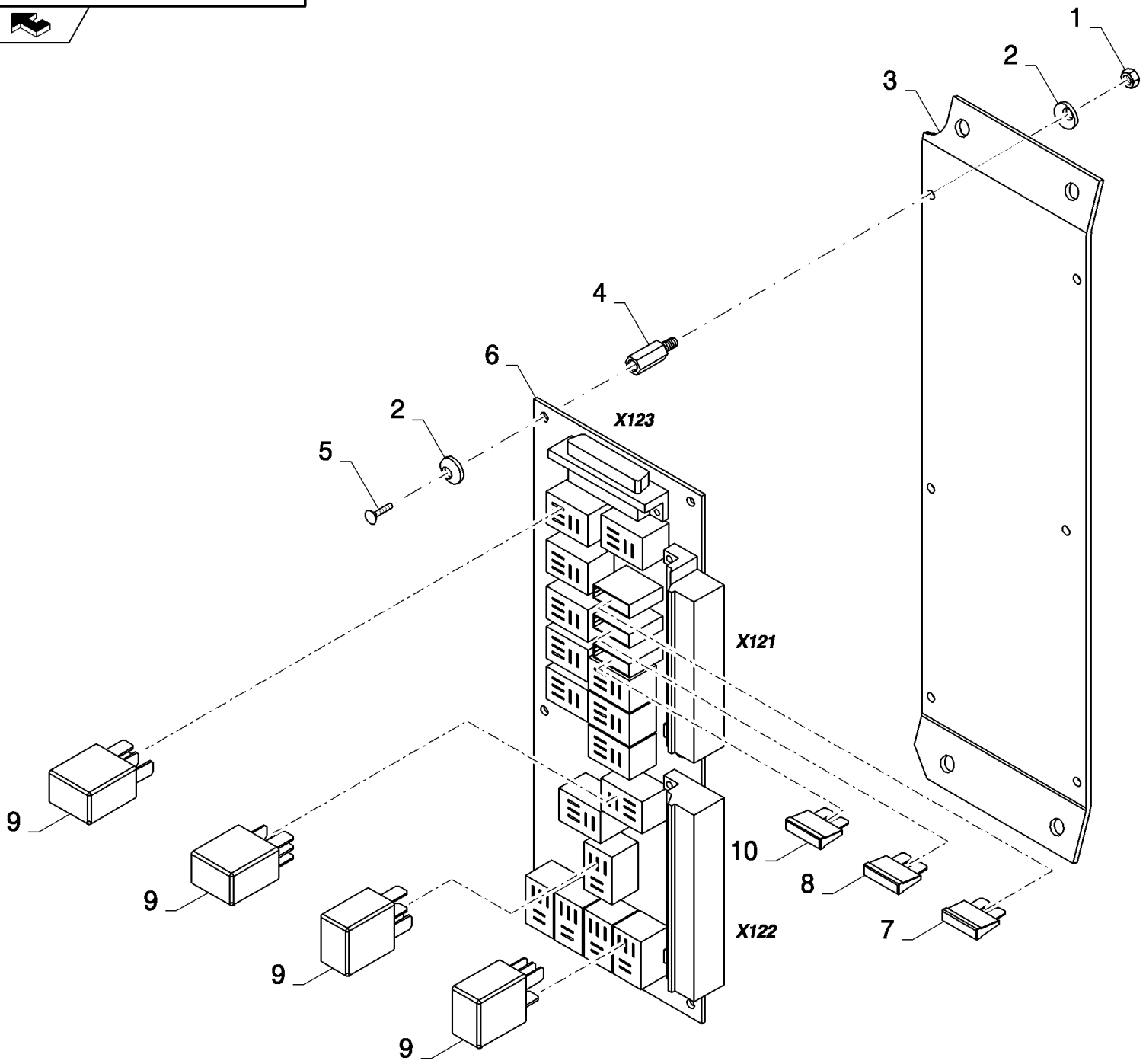

CSX7080 C659 - COMBINE (9/06-8/08)

06.208(01) RIGHT HAND CONSOLE

ссылка	Номер детали	Кол-во	Описание
1	100012	6	NUT, M4, Cl 8,
2	322355	12	WASHER, Belleville, M4,
3	84439591	1	SUPPORT,
4	84814397	6	BUSHING,
5	86511823	6	SCREW, Cross Pan Hd, M4 x 8, M4x8
6	87390510	1	BOARD, PRINTED CIRCUIT,
7	9504308	1	FUSE, 15A
8	9811773	1	FUSE, 10A
9	86509590	14	RELAY, , BSN C543
9	86509590	16	RELAY, , ASN D544
10	9504310	1	FUSE, 25A

06.209(01) STANDARD LIGHTS, FRONT, FOR FINLAND, ITALY, SWITZERLAND, AND BENELUX

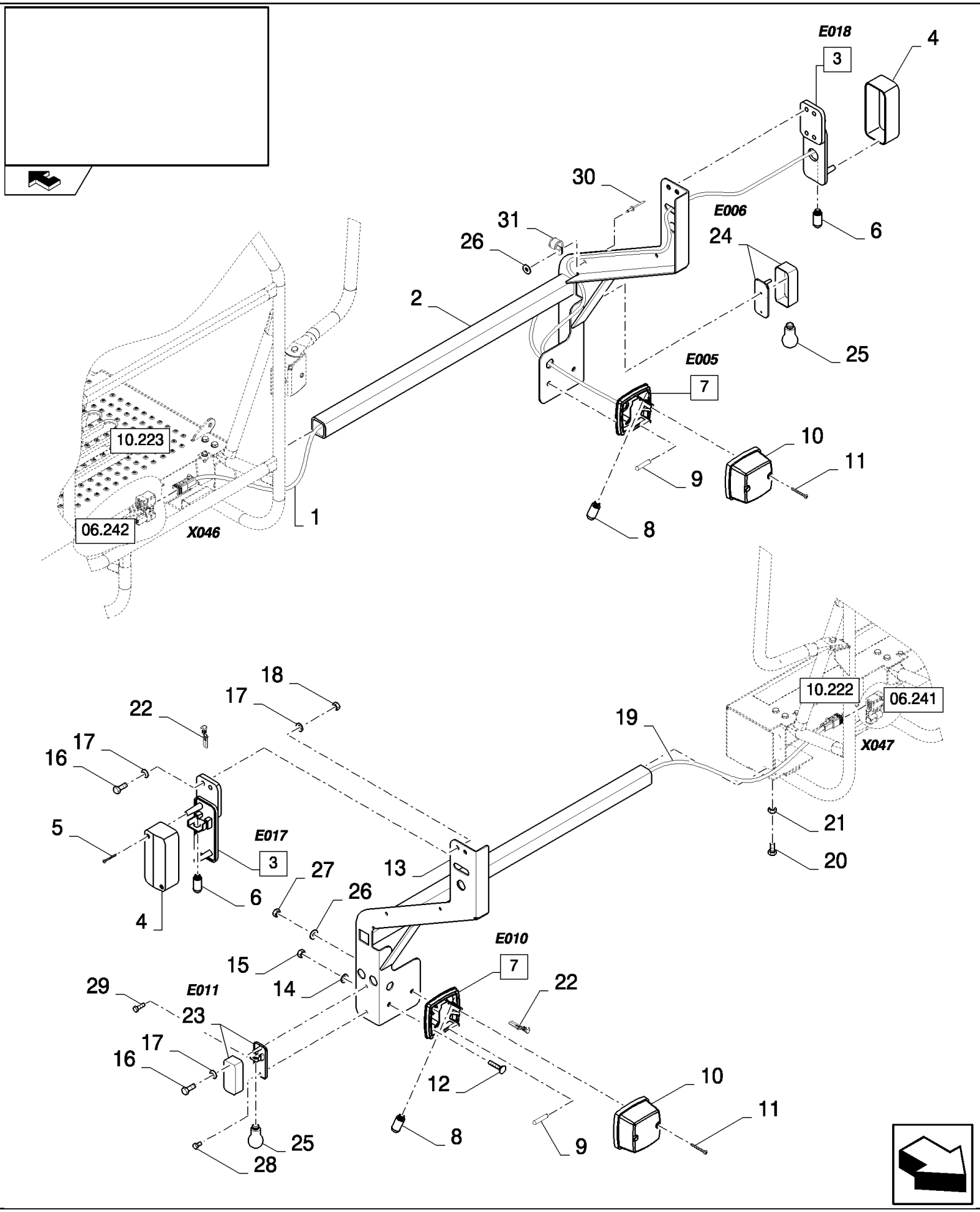

CSX7080 C659 - COMBINE (9/06-8/08)

06.209(01) STANDARD LIGHTS, FRONT, FOR FINLAND, ITALY, SWITZERLAND, AND BENELUX

ссылка	Номер детали	Кол-во	Описание
1	84448037	1	HARNESS, WIRE, , SEE FIGURE 06.562
2	84447492	1	SUPPORT,
3	449531	2	LAMP, (4 to 6)
4	NSS	2	NOT SERVICED SEPARATELY,
5	NSS	4	NOT SERVICED SEPARATELY,
6	353078	2	BULB, 12V 4W
7	418871	2	LAMP, (8 to 11)
8	398877	2	BULB, 12V 10W
9	470017	2	BULB, 12V 5W
10	NSS	2	NOT SERVICED SEPARATELY,
11	NSS	2	NOT SERVICED SEPARATELY,
12	86511042	4	SCREW, Cross Pan Hd, M4 x 16,
13	84447491	1	SUPPORT,
14	322355	4	WASHER, Belleville, M4,
15	100012	4	NUT, M4, Cl 8,
16	86508568	4	SCREW, Hex, M6 x 16, 8.8,
17	322357	8	WASHER, SPRING, Belleville, M6,
18	353308	4	NUT, M6 x 1, Cl 8,
19	84448038	1	HARNESS, WIRE, , SEE FIGURE 06.563
20	120103	2	BOLT, Hex, M8 x 16, 8.8,
21	9706690	2	NUT, M8, Cl 8,
22	441159	12	CONNECTOR, WIRE,
23	84011215	1	LAMP ASSY, SIDE, RH
24	84011216	1	LAMP ASSY, SIDE, LH
25	418870	2	BULB, 12V 10W
26	322356	8	WASHER, 5MM
27	86508813	4	NUT, M5, Cl 8,
28	86585709	2	SCREW, Cross Pan Hd, M5 x 10, M5x10
29	120098	2	BOLT, Hex, M5 x 20, 8.8, Full Thd,
30	445394	2	RIVET, Pop, M4.8 x 12.7, RIVET
31	84818441	2	CLAMP,

06.209(A 01) STANDARD LIGHTS, FRONT, FOR SCANDINAVIA, UK, GERMANY, HUNGARY, SWITZERLAND, FRANCE AND RUSSI

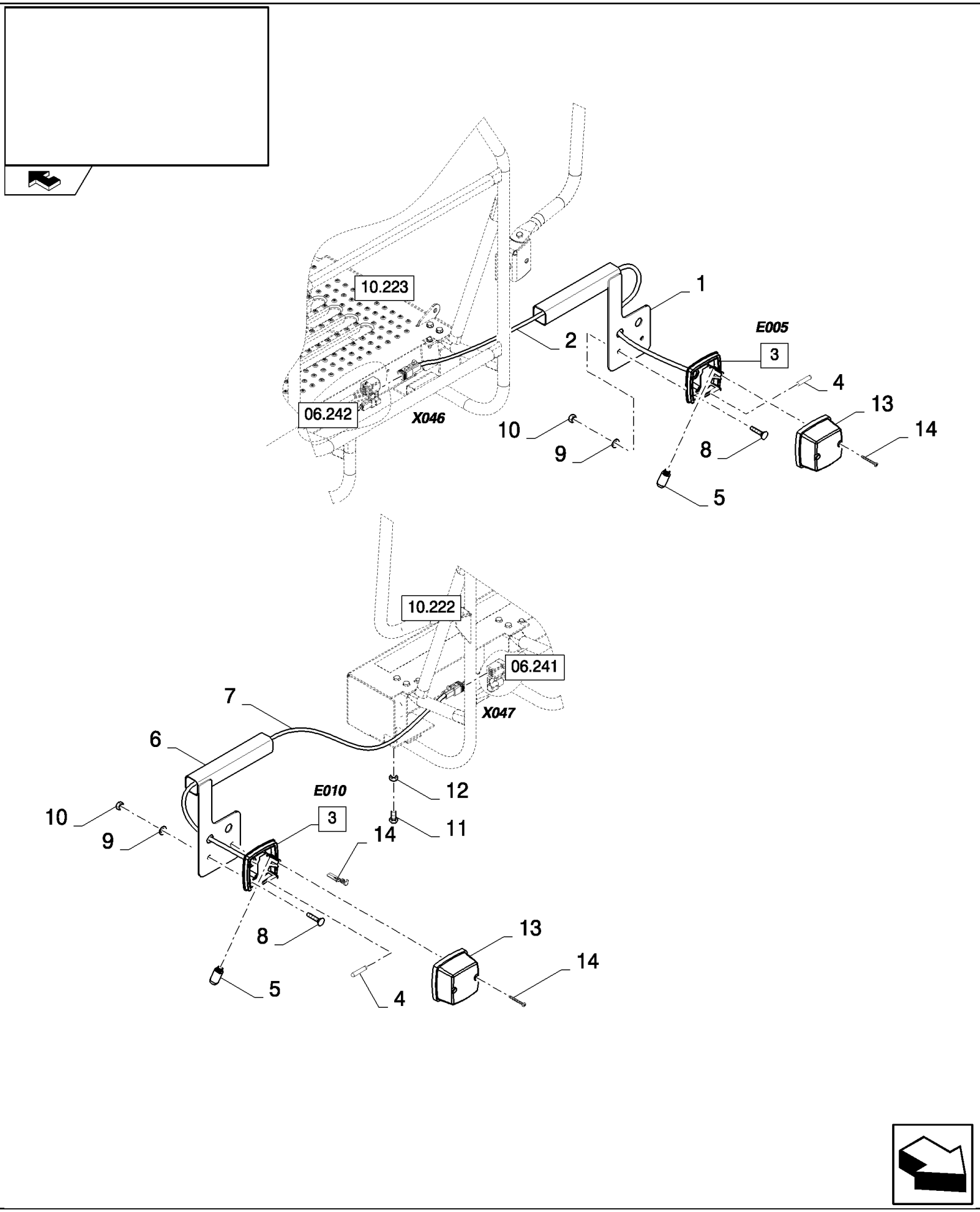

06.209(A 01) STANDARD LIGHTS, FRONT, FOR SCANDINAVIA, UK, GERMANY, HUNGARY, SWITZERLAND, FRANCE AND RUSS

ссылка	Номер детали	Кол-во	Описание
1	84814350	1	SUPPORT,
2	84437371	1	HARNESS, WIRE, , SEE FIGURE 06.534
3	418871	2	LAMP, (4, 5, 13, 14)
4	170017	2	KEY,
5	398877	2	BULB,
6	84814352	1	SUPPORT,
7	84437374	1	HARNESS, WIRE, , SEE FIGURE 06.535
8	86511042	4	SCREW, Cross Pan Hd, M4 x 16,
9	322355	4	WASHER, Belleville, M4,
10	100012	4	NUT, M4, Cl 8,
11	9706690	2	NUT, M8, Cl 8,
12	120103	2	BOLT, Hex, M8 x 16, 8.8,
13	NSS	1	NOT SERVICED SEPARATELY,
14	NSS	2	NOT SERVICED SEPARATELY,

06.209(B 01) STANDARD HEADLIGHTS, FRONT - FOR LATERALE ONLY

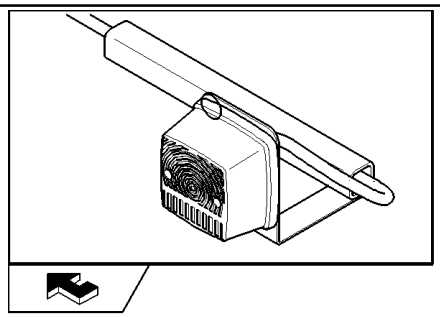

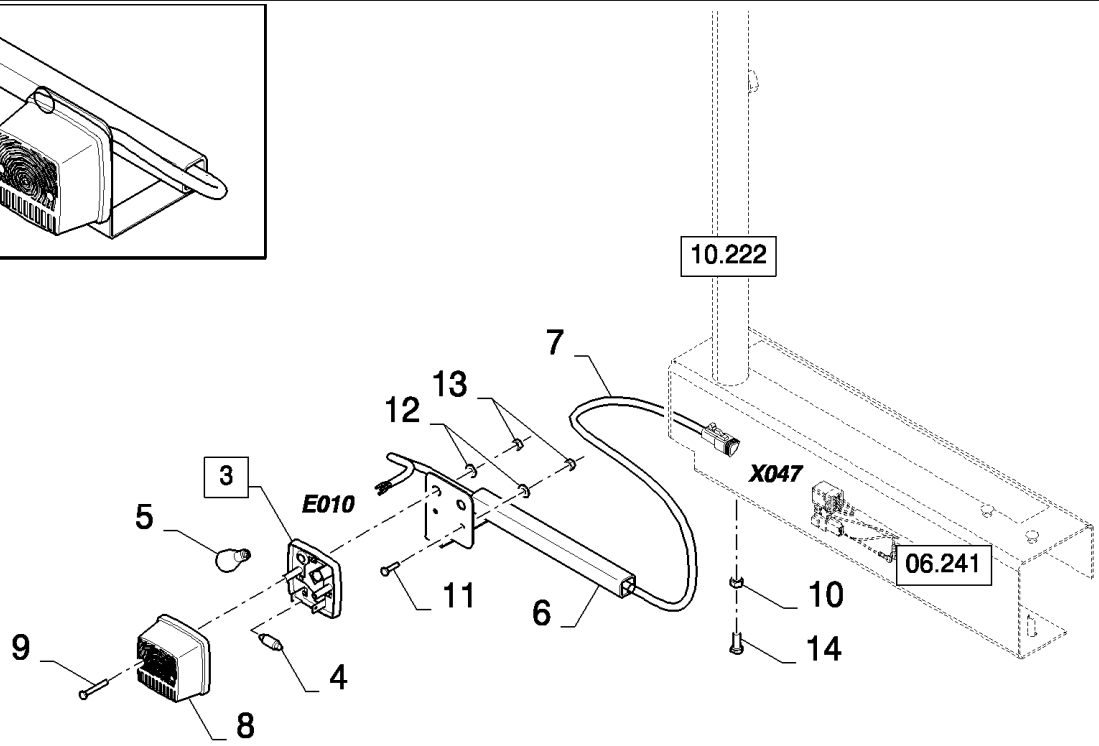

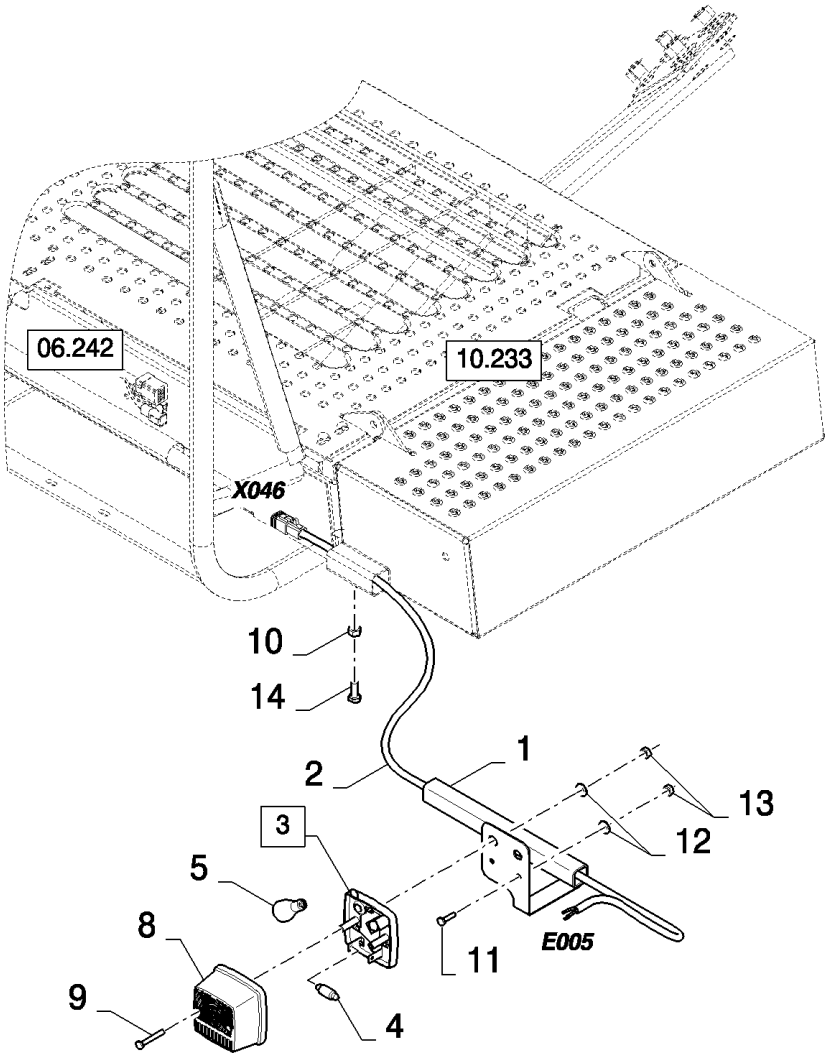

CSX7080 C659 - COMBINE (9/06-8/08)

06.209(B 01) STANDARD HEADLIGHTS, FRONT - FOR LATERALE ONLY

ссылка	Номер детали	Кол-во	Описание
1	87713625	1	SUPPORT,
2	84437371	1	HARNESS, WIRE, , SEE FIGURE 06.562
3	418871	2	LAMP,
4	470017	2	BULB, (8, 9)
5	398877	2	BULB,
6	87713629	1	SUPPORT,
7	84437374	1	HARNESS, WIRE, , SEE FIGURE 06.563
8	NSS	1	NOT SERVICED SEPARATELY,
9	NSS	1	NOT SERVICED SEPARATELY,
10	9706690	2	NUT, M8, Cl 8,
11	86511042	4	SCREW, Cross Pan Hd, M4 x 16,
12	322355	4	WASHER, Belleville, M4,
13	100012	4	NUT, M4, Cl 8,
14	120104	2	SCREW, Hex, M8 x 20, 8.8,

06.209(C 01) STANDARD HEADLIGHTS, FRONT - FOR LATERALE ONLY

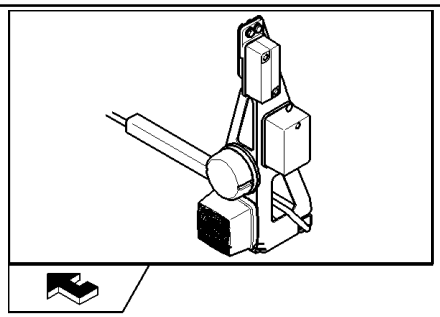

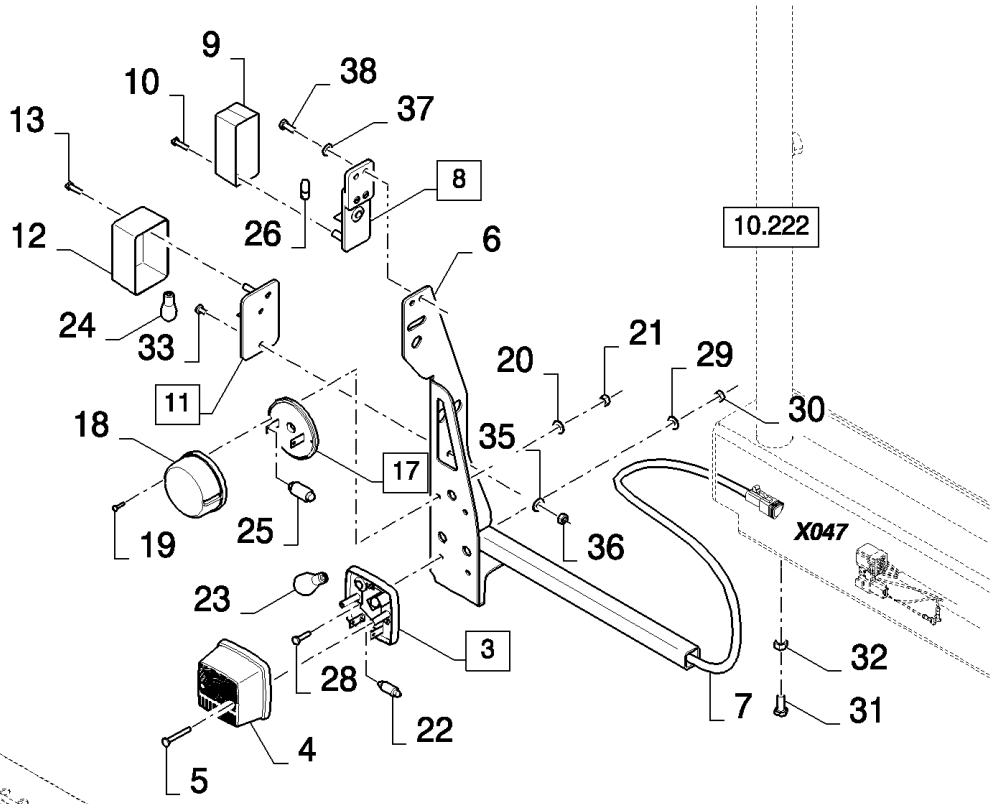

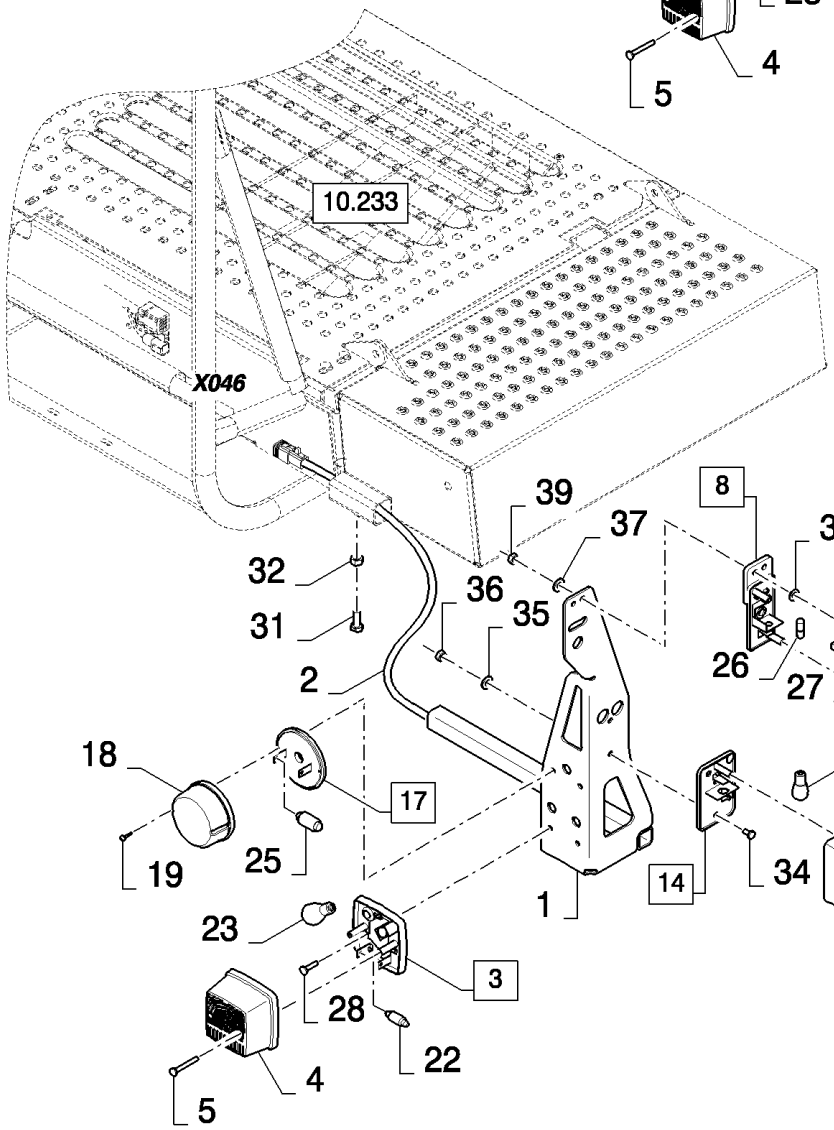

CSX7080 C659 - COMBINE (9/06-8/08)

06.209(C 01) STANDARD HEADLIGHTS, FRONT - FOR LATERALE ONLY

ссылка	Номер детали	Кол-во	Описание
1	87724803	1	SUPPORT,
2	84448037	1	HARNESS, WIRE,
2	87732955	1	HARNESS, WIRE, , FOR AUSTRIA ONLY
3	418871	2	LAMP, (4,5)
4	NS	1	NOT SERVICED,
5	NS	1	NOT SERVICED,
6	87729643	1	SUPPORT,
7	84448038	1	HARNESS, WIRE,
7	87732956	1	HARNESS, WIRE, , FOR AUSTRIA ONLY
8	449531	2	LAMP, (9, 10)
9	NS	1	NOT SERVICED,
10	NS	1	NOT SERVICED,
11	84011216	1	LAMP ASSY, SIDE, (12, 13)
12	NS	1	NOT SERVICED,
13	NS	1	NOT SERVICED,
14	84011215	1	LAMP ASSY, SIDE, (15, 16)
15	NS	1	NOT SERVICED,
16	NS	1	NOT SERVICED,
17	336483	2	LIGHT, TAIL, (18 to 21), FOR AUSTRIA ONLY
18	NS	1	NOT SERVICED, , FOR AUSTRIA ONLY
19	NS	1	NOT SERVICED, , FOR AUSTRIA ONLY
20	NS	1	NOT SERVICED, , FOR AUSTRIA ONLY
21	NS	1	NOT SERVICED, , FOR AUSTRIA ONLY
22	470017	2	BULB,
23	398877	2	BULB,
24	418870	2	BULB,
25	353078	2	BULB, , FOR AUSTRIA ONLY
26	470016	2	BULB,
27	441159	12	CONNECTOR, WIRE,
28	86511042	4	SCREW, Cross Pan Hd, M4 x 16,
29	322355	4	WASHER, Belleville, M4,
30	100012	4	NUT, M4, Cl 8,
31	120104	2	SCREW, Hex, M8 x 20, 8.8,
32	9706690	2	NUT, M8, Cl 8,
33	120098	2	BOLT, Hex, M5 x 20, 8.8, Full Thd,
34	86585709	2	SCREW, Cross Pan Hd, M5 x 10,
35	322356	4	WASHER,
36	86508813	4	NUT, M5, Cl 8,
37	322357	8	WASHER, SPRING, Belleville, M6,
38	86508568	4	SCREW, Hex, M6 x 16, 8.8,
39	353308	4	NUT, M6 x 1, Cl 8,

06.210(01) ELECTRICAL EQUIPMENT, STRAW CHOPPER

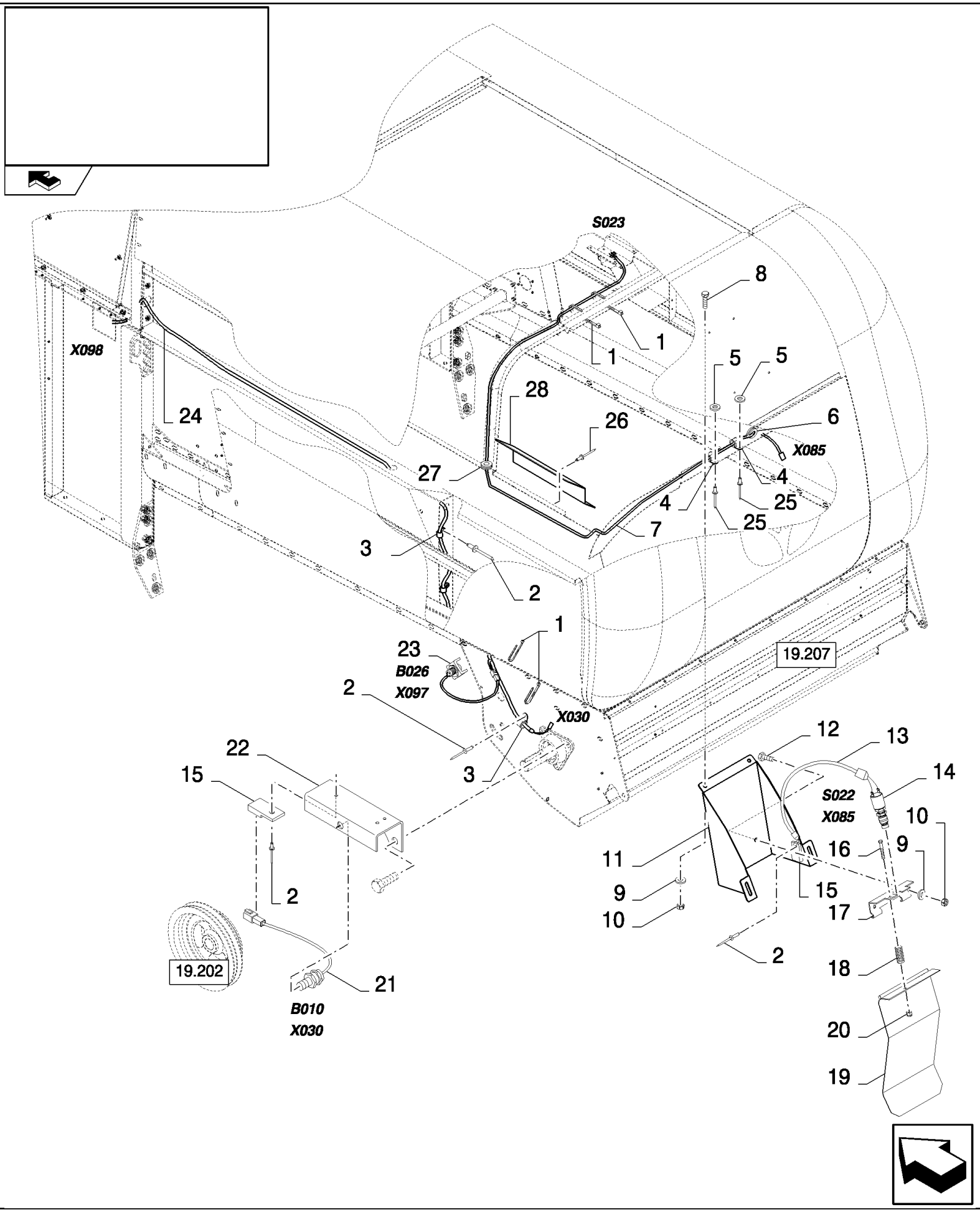

CSX7080 C659 - COMBINE (9/06-8/08)

06.210(01) ELECTRICAL EQUIPMENT, STRAW CHOPPER

ссылка	Номер детали	Кол-во	Описание
1	9993154	3	ELASTIC STRAP, , BSN C611
1	9993154	2	ELASTIC STRAP, , ASN D612
2	445394	2	RIVET, Pop, M4.8 x 12.7,
3	84818441	3	CLAMP,
4	9507807	2	CLAMP,
5	322356	2	WASHER, 5MM
6	307016	1	FITTING, PIPE,
7	84437319	1	HARNESS, WIRE, , SEE FIGURE 06.528
8	86512439	4	SCREW, Short NK, M6 x 16, Cl8.8, Full Thd,
9	322357	6	WASHER, SPRING, Belleville, M6,
10	9706755	6	NUT, M6, Cl 8,
11	84441249	1	SUPPORT,
12	86508568	2	SCREW, Hex, M6 x 16, 8.8,
13	84441663	1	HARNESS, WIRE, , SEE FIGURE 06.548
14	89818685	1	SWITCH,
15	84058832	2	CLIP,
16	120056	1	SCREW, Hex, M6 x 50, 8.8,
17	84015986	1	HINGE,
18	84005450	1	SPRING,
19	84015983	1	PLATE, COVER,
20	353308	1	NUT, M6 x 1, Cl 8,
21	84058861	1	SENSOR, , SEE FIGURE 06.701
22	84444723	1	BRACKET,
23	84058860	1	SENSOR, , SEE FIGURE 06.701
24	84444962	1	HARNESS, WIRE, , SEE FIGURE 06.555
25	9512290	5	RIVET,
26	9512968	3	RIVET,
27	129959	2	GROMMET,
28	84439603	1	SUPPORT,

06.211(01) WORK LIGHTS

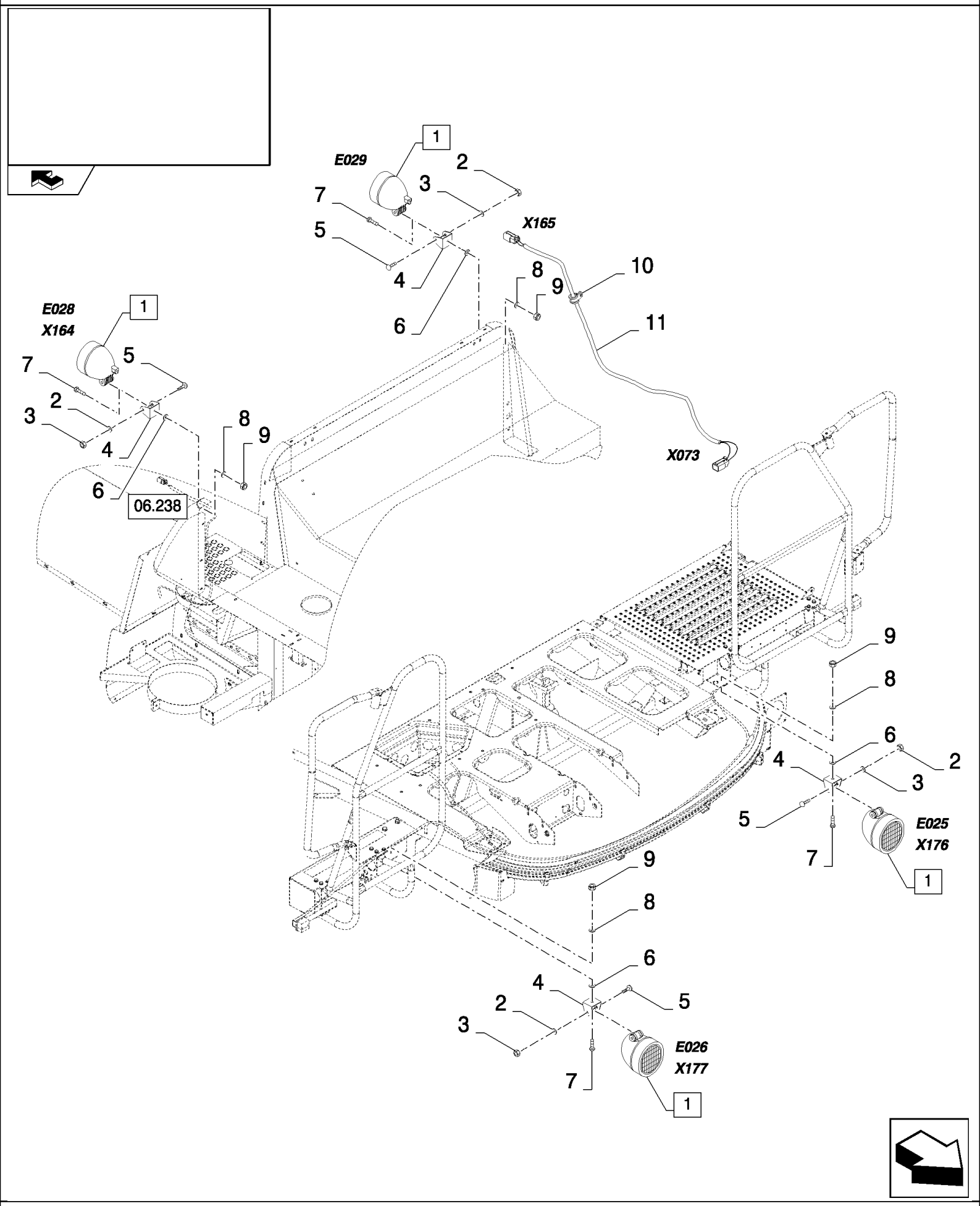

06.211(01) WORK LIGHTS

ссылка	Номер детали	Кол-во	Описание
1	84607497	4	LAMP, (2 to 6)
2	NSS	1	NOT SERVICED SEPARATELY,
3	NSS	1	NOT SERVICED SEPARATELY,
4	NSS	1	NOT SERVICED SEPARATELY,
5	NSS	1	NOT SERVICED SEPARATELY,
6	NSS	1	NOT SERVICED SEPARATELY,
7	43139	4	SCREW, Hex, M10 x 25, 8.8, Full Thd, M10x25
8	86511323	4	WASHER, M10 x 20 x 2,
9	100037	4	NUT, M10 x 1.5, Cl 8,
10	272535	5	CLAMP, 1/8", Insul, 1/4" Bolt,
11	84437327	1	HARNESS, WIRE, , SEE FIGURE 06.530

06.211(A 01) STANDARD HEADLIGHTS, FRONT - FOR LATERALE ONLY

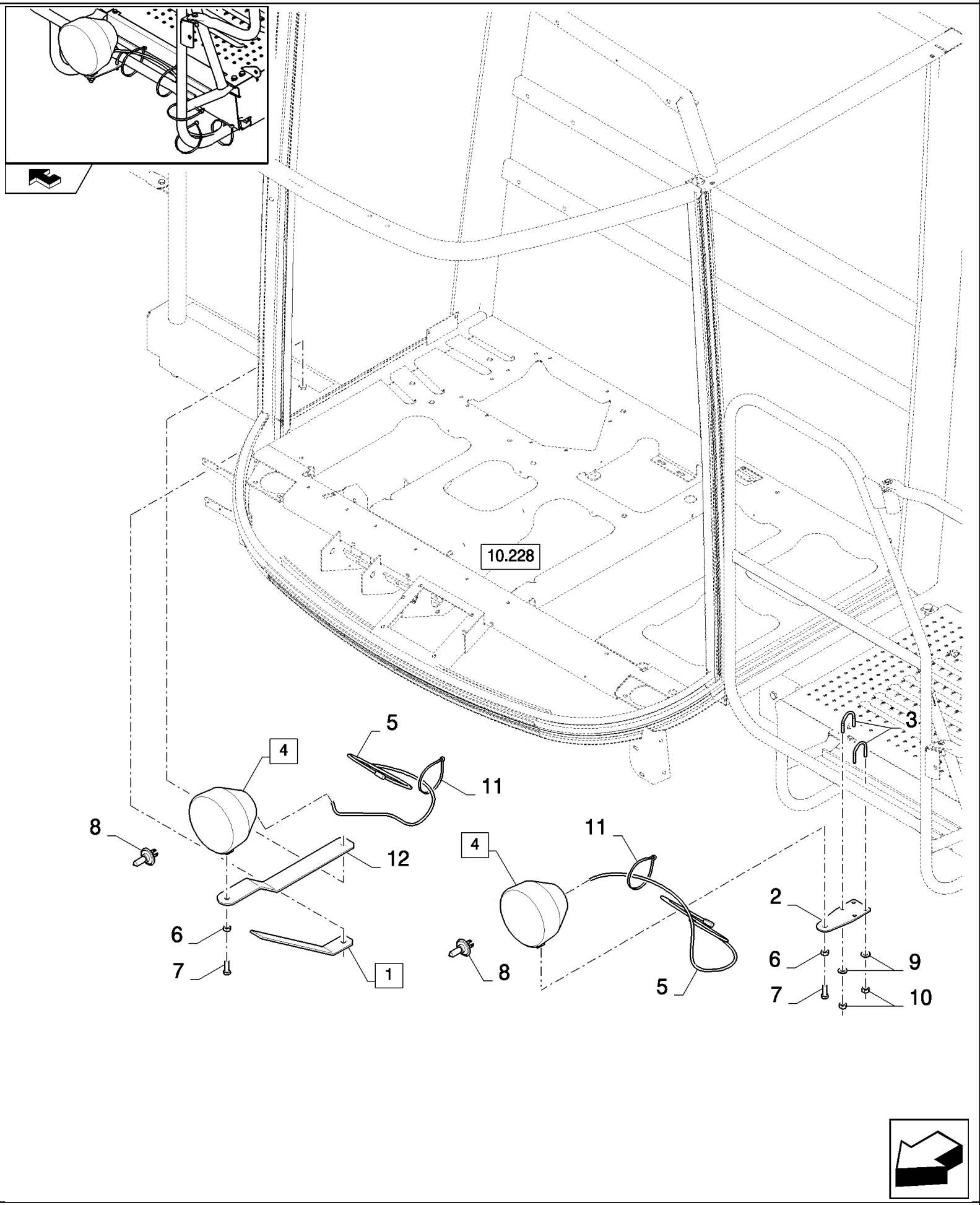

CSX7080 C659 - COMBINE (9/06-8/08)

06.211(A 01) STANDARD HEADLIGHTS, FRONT - FOR LATERALE ONLY

ссылка	Номер детали	Кол-во	Описание
1	87709825	1	SUPPORT, (12)
2	87723136	1	PLATE, MOUNTING,
3	84448555	2	U-BOLT,
4	418863	2	LAMP, (6, 7)
5	84448631	2	HARNESS, WIRE,
6	NSS	1	NOT SERVICED SEPARATELY,
7	NSS	1	NOT SERVICED SEPARATELY,
8	NSS	1	NOT SERVICED SEPARATELY, , BSN C614
8	446592	1	BULB, , ASN D615
9	322357	4	WASHER, SPRING, Belleville, M6,
10	9706755	4	NUT, M6, Cl 8,
11	86566990	9	STRAP, CABLE,
12	NSS	1	NOT SERVICED SEPARATELY,

06.212(A 01) STANDARD MONITOR

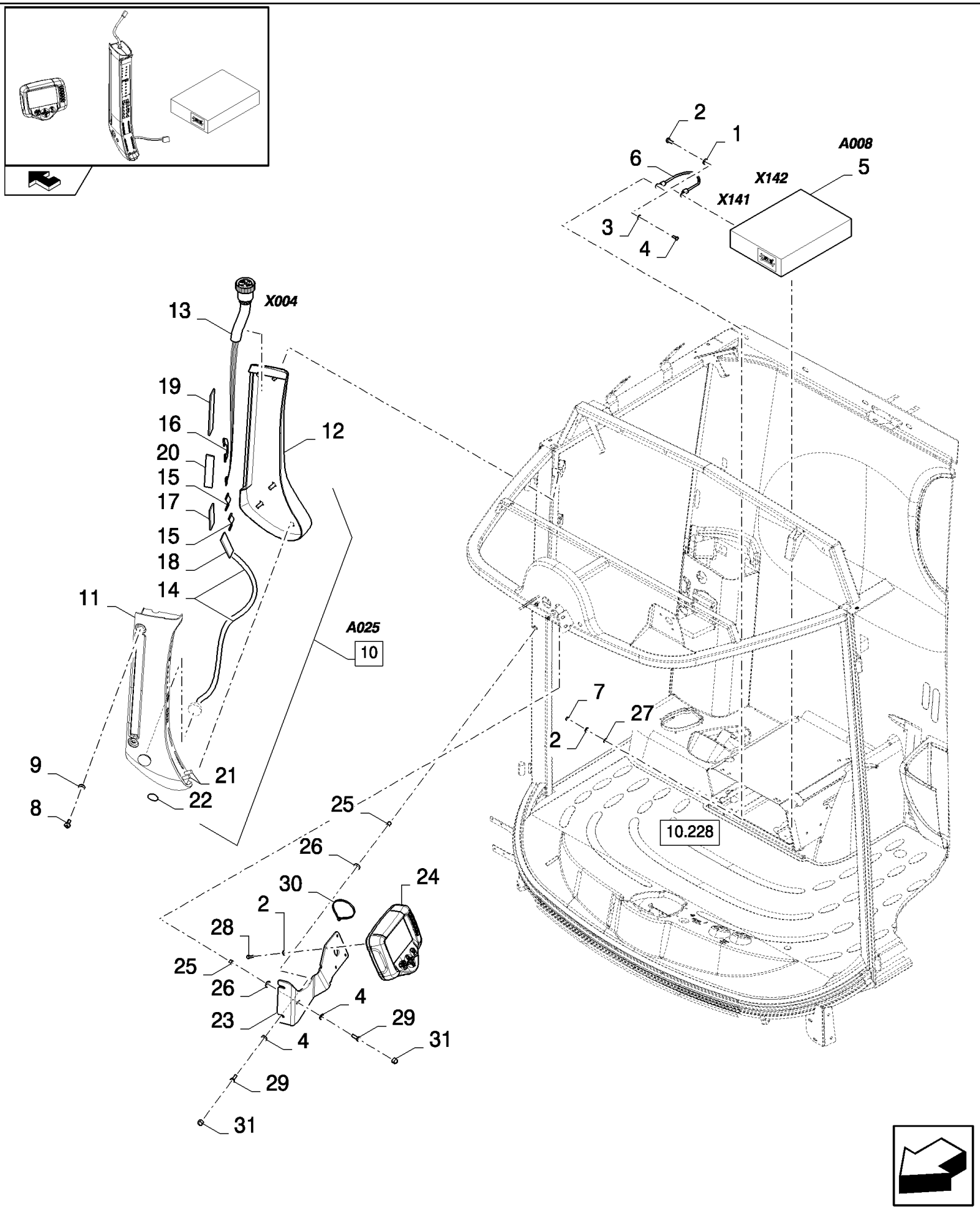

CSX7080 C659 - COMBINE (9/06-8/08)

06.212(A 01) STANDARD MONITOR

ссылка	Номер детали	Кол-во	Описание
1	86508568	1	SCREW, Hex, M6 x 16, 8.8,
2	322357	6	WASHER, SPRING, Belleville, M6,
3	120104	1	SCREW, Hex, M8 x 20, 8.8,
4	322358	4	WASHER, SPRING, Belleville, M8,
5	87394169	1	MODULE,
6	84441529	1	HARNESS, WIRE, , SEE FIGURE 06.545
7	9706755	1	NUT, M6, Cl 8,
8	412491	3	SCREW, M12x70
9	448889	3	WASHER,
10	87525573	1	MONITOR, CONTROL, (11 to 22)
11	84807802	1	CONSOLE, LH
12	84807803	1	CONSOLE, RH
13	84455608	1	HARNESS, WIRE, POSTMODULE
14	84455609	1	CABLE, BUZZER
15	84455610	2	CABLE,
16	84455611	1	CABLE,
17	84455612	1	BOARD, PRINTED CIRCUIT, HEADER HIGHT
18	84455613	1	BOARD, PRINTED CIRCUIT, GRAINLOSS
19	84455614	1	BOARD, PRINTED CIRCUIT, ALARM-DISPLAY
20	84455615	1	BOARD, PRINTED CIRCUIT, MONITOR CPU
21	84455616	1	PUSH BUTTON,
22	87352617	1	DECAL,
23	87532299	1	SUPPORT,
24	87578268	1	MONITOR, CONTROL, , BSN C603
24	87665214	1	DISPLAY, , BSN F604619
24	87703363	1	MONITOR, CONTROL, , ASN D620
25	87563291	3	INSERT, THREADED,
26	378243	3	WASHER, M8,
27	280279	1	WASHER, LOCK, Ext Tooth, 1/4",
28	86512135	4	SCREW, Hex Soc Hd, M6 x 20, 12.9, , BSN C607
28	86512134	4	SCREW, Hex Soc Hd, M6 x 16, 12.9, , ASN D608
29	43127	3	BOLT, Hex, M8 x 25, 8.8,
30	86566990	1	STRAP, CABLE,
31	458639	3	CAP, Nut, M8,

06.213(A 01) ELECTRICITY SELF LEVELLING, SMART SIEVE

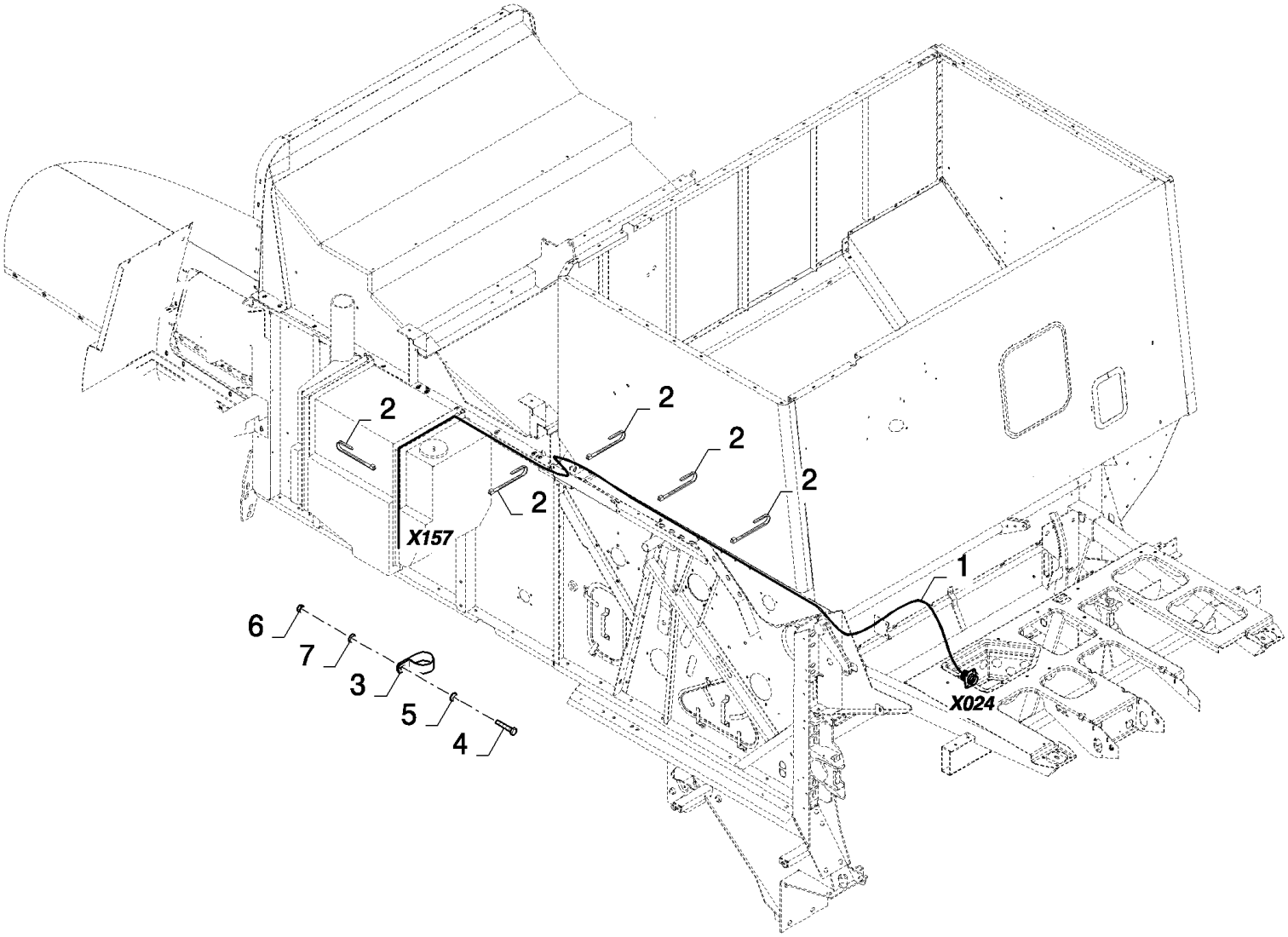

CSX7080 C659 - COMBINE (9/06-8/08)

06.213(A 01) ELECTRICITY SELF LEVELLING, SMART SIEVE

ссылка	Номер детали	Кол-во	Описание
1	87378595	1	HARNESS, WIRE, , SEE FIGURE 06.587
2	86566990	13	STRAP, CABLE,
3	87029955	1	CLAMP,
4	120100	1	BOLT, Hex, M6 x 20, 8.8,
5	140040	1	WASHER, M6 x 22 x 2,
6	9706755	1	NUT, M6, Cl 8,
7	322357	1	WASHER, SPRING, Belleville, M6,

06.214(01) WORK LIGHTS

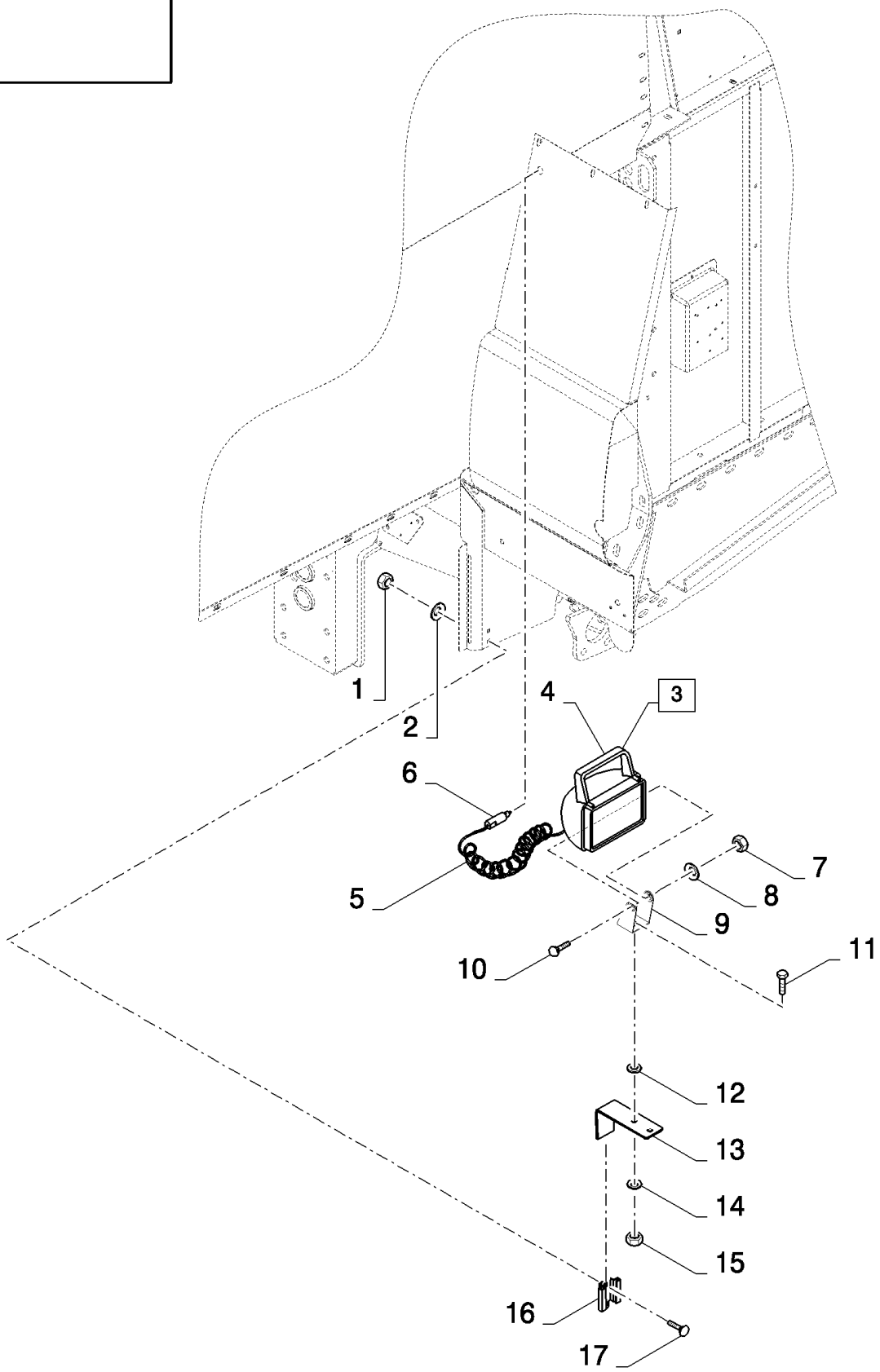

06.214(01) WORK LIGHTS

ссылка	Номер детали	Кол-во	Описание
1	9706690	4	NUT, M8, Cl 8,
2	322358	4	WASHER, SPRING, Belleville, M8,
3	84004176	1	LAMP, WORK, (4 to 12), SEE FIGURE 06.701
4	9837140	1	LAMP,
5	264517	1	HARNESS, WIRE, , SEE FIGURE 06.501
6	353969	1	CONNECTOR, ELEC,
7	NSS	1	NOT SERVICED SEPARATELY,
8	NSS	1	NOT SERVICED SEPARATELY,
9	NSS	1	NOT SERVICED SEPARATELY,
10	NSS	1	NOT SERVICED SEPARATELY,
11	NSS	1	NOT SERVICED SEPARATELY,
12	NSS	1	NOT SERVICED SEPARATELY,
13	9813909	1	SUPPORT,
14	140045	1	WASHER, SPRING, Belleville, M10,
15	100016	1	NUT, M10, Cl 8,
16	9837606	2	CLIP,
17	86619060	4	BOLT, CARRIAGE, Short NK, M8 x 16, Cl8.8, Full Thd,

06.215(01) STRAW WALKER : PROTECTION

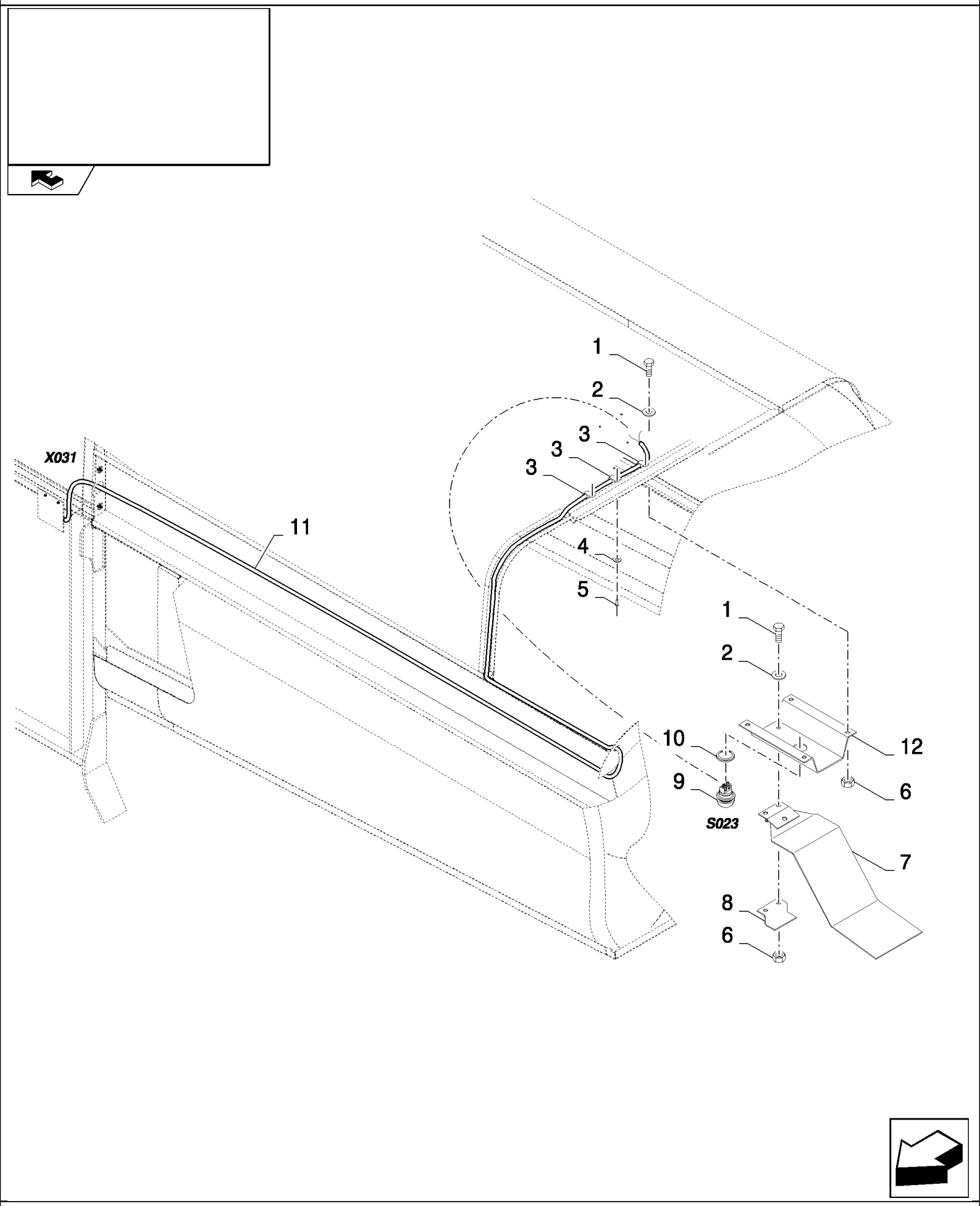

06.215(01) STRAW WALKER : PROTECTION

ссылка	Номер детали	Кол-во	Описание
1	86508568	6	SCREW, Hex, M6 x 16, 8.8,
2	322357	6	WASHER, SPRING, Belleville, M6,
3	9507807	3	CLAMP, , BSN C611
3	9507807	1	CLAMP, , ASN D612
4	322356	3	WASHER, 5MM, BSN C611
4	322356	1	WASHER, , ASN D612
5	89512289	3	RIVET, Rivet, BSN C611
5	89512289	1	RIVET, , ASN D612
6	9706755	6	NUT, M6, Cl 8,
7	417790	1	SUPPORT,
8	417793	1	SUPPORT,
9	335378	1	SWITCH,
10	397986	1	CUP,
11	84437313	1	HARNESS, WIRE, , SEE FIGURE 06.527
12	417792	1	SUPPORT,

06.216(01) SWITCHES IN CAB ROOF

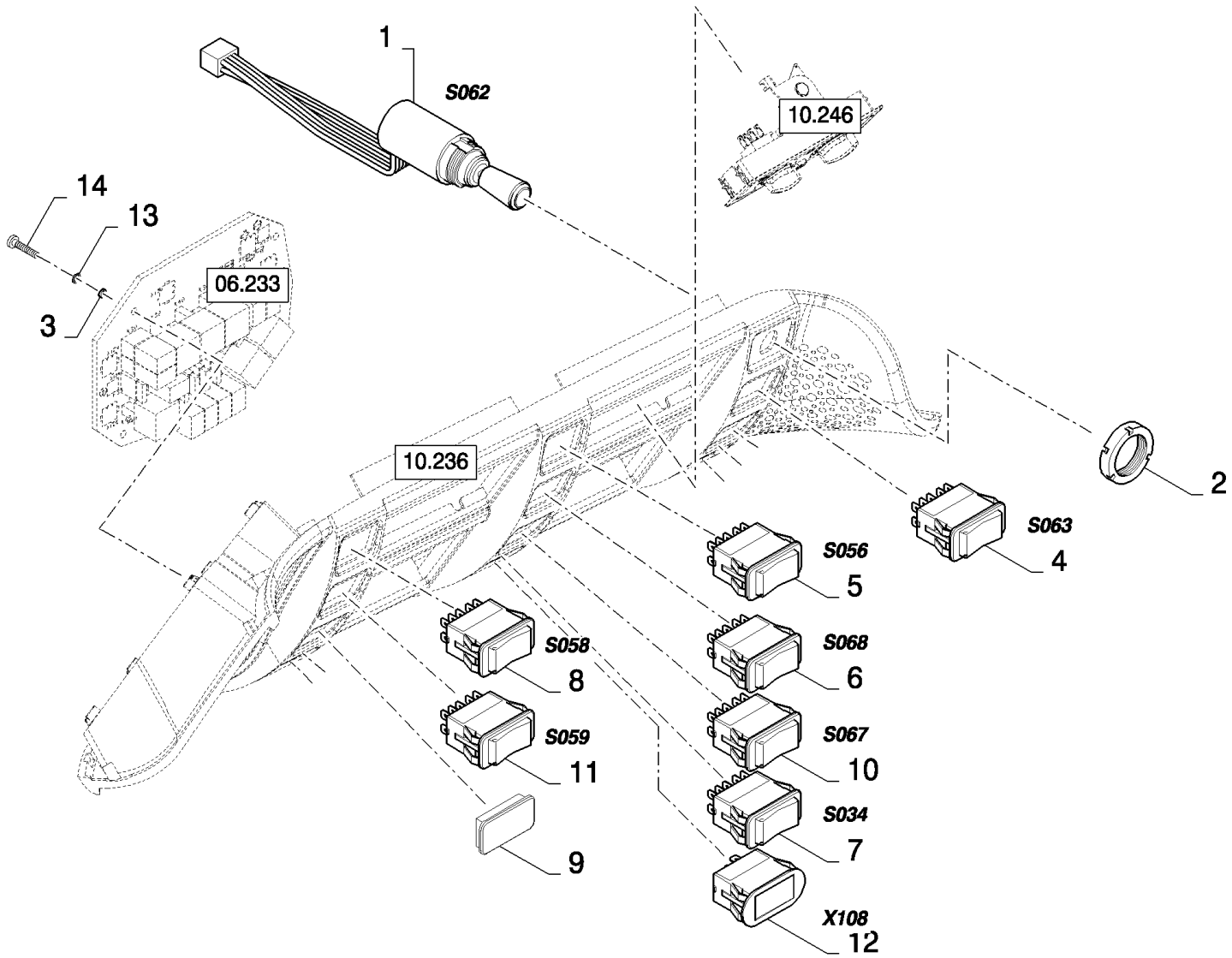

CSX7080 C659 - COMBINE (9/06-8/08)

06.216(01) SWITCHES IN CAB ROOF

ссылка	Номер детали	Кол-во	Описание
1	84400393	1	SWITCH, (2), MIRROR ADJUSTMENT
2	NSS	1	NOT SERVICED SEPARATELY,
3	87327692	5	WASHER,
4	84320661	1	SWITCH, , MIRROR TUMBLER, FOR GERMANY ONLY
5	84320666	1	SWITCH, , WORKLIGHTS TUMBLER
6	84320667	1	SWITCH, , HEADLIGHTS TUMBLER
7	84320669	1	SWITCH, , REVOLVING FLASHING LIGHTS TUMBLER
8	84320664	1	SWITCH, , WINDSCREEN WIPER TUMBLER
9	84807276	9	COVER,
10	84320668	1	SWITCH, , STUBBLE LIGHTS TUMBLER
11	84320665	1	SWITCH, , WINDSCREEN WASHER ROCKER
12	84067961	2	LAMP, CEILING,
13	322355	5	WASHER, Belleville, M4,
14	412064	5	SCREW, Hex, M4 x 16, 8.8, Full Thd, M6x16

06.217(01) CAB, MAIN WIRING HARNESS

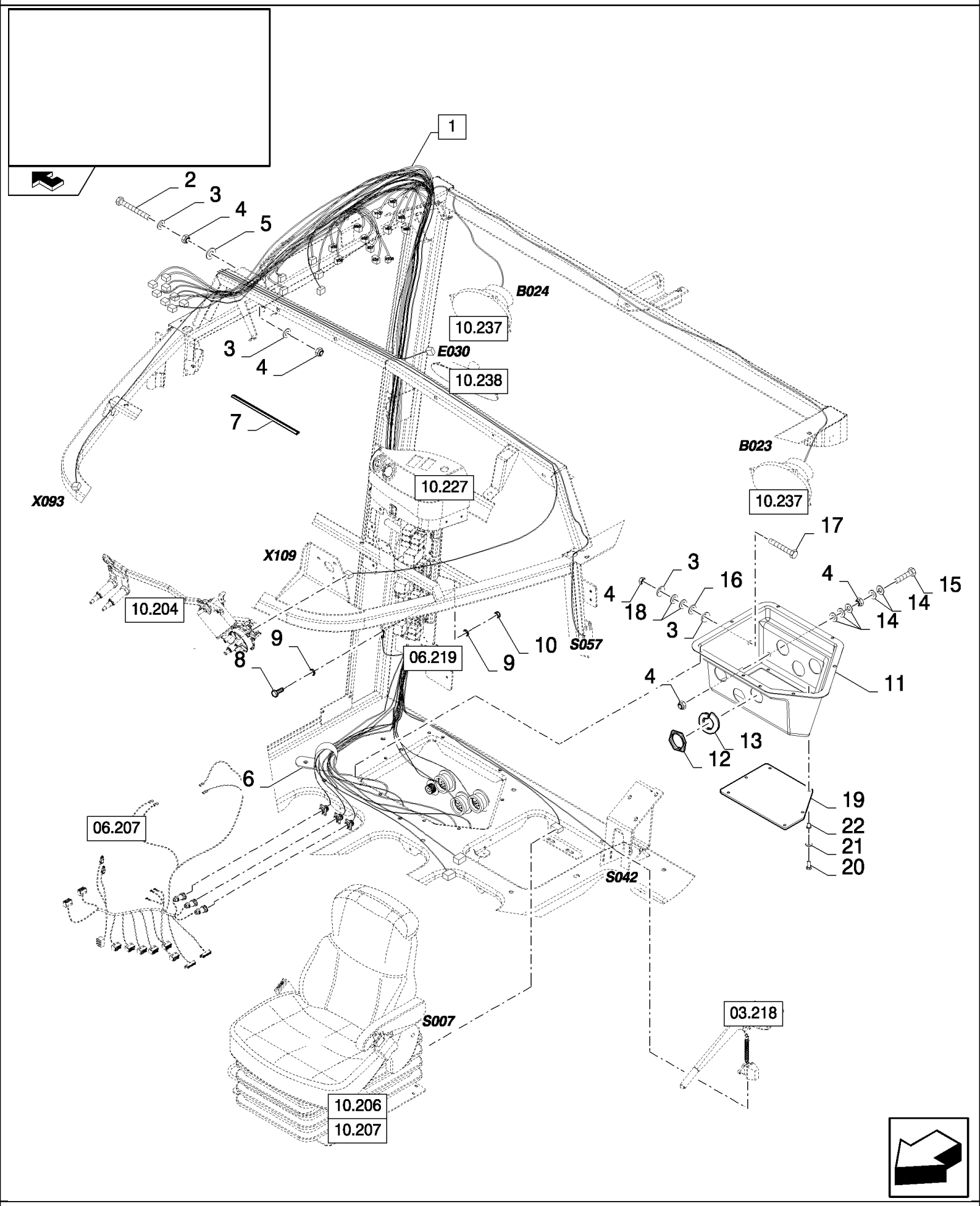

CSX7080 C659 - COMBINE (9/06-8/08)

06.217(01) CAB, MAIN WIRING HARNESS

ссылка	Номер детали	Кол-во	Описание
1	87370327	1	HARNESS, WIRE, (11 to 22), SEE FIGURE 06.577, BSN C614
1	87598920	1	HARNESS, WIRE, , SEE FIGURE 06.592, BSN F615631
1	87742089	1	HARNESS, WIRE, , ASN D632
2	86977790	1	SCREW, Hex, M6 x 45, 8.8,
3	322357	4	WASHER, SPRING, Belleville, M6,
4	9706755	5	NUT, M6, Cl 8,
5	9824259	1	WASHER, M6 x 12 x 1.6,
6	86628564	1	CLAMP, 1 1/4", Insul, 3/8" Bolt,
7	80401310	1	PROFILE, L=0.5M
8	44334	1	SCREW, Cross Pan Hd, M4 x 12,
9	322355	2	WASHER, Belleville, M4,
10	100012	1	NUT, M4, Cl 8,
11	87055523	1	JUNCTION BOX,
12	86619907	9	NUT, , BSN C543
12	636666	9	NUT, , ASN D544
13	84607513	9	WASHER, LOCK, , BSN C543
13	636665	9	WASHER, LOCK, , ASN D544
14	412649	5	WASHER, SPRING, Belleville, M6,
15	120101	1	BOLT, Hex, M6 x 30, 8.8, Full Thd,
16	86588450	1	WASHER, M6,
17	120102	1	SCREW, Hex, M6 x 40, 8.8, Full Thd,
18	140040	2	WASHER, M6 x 22 x 2,
19	84807744	1	COVER,
20	412064	6	SCREW, Hex, M4 x 16, 8.8, Full Thd,
21	322355	6	WASHER, Belleville, M4,
22	84814233	6	FASTENER,

06.218(01) CAB, MAIN WIRING HARNESS

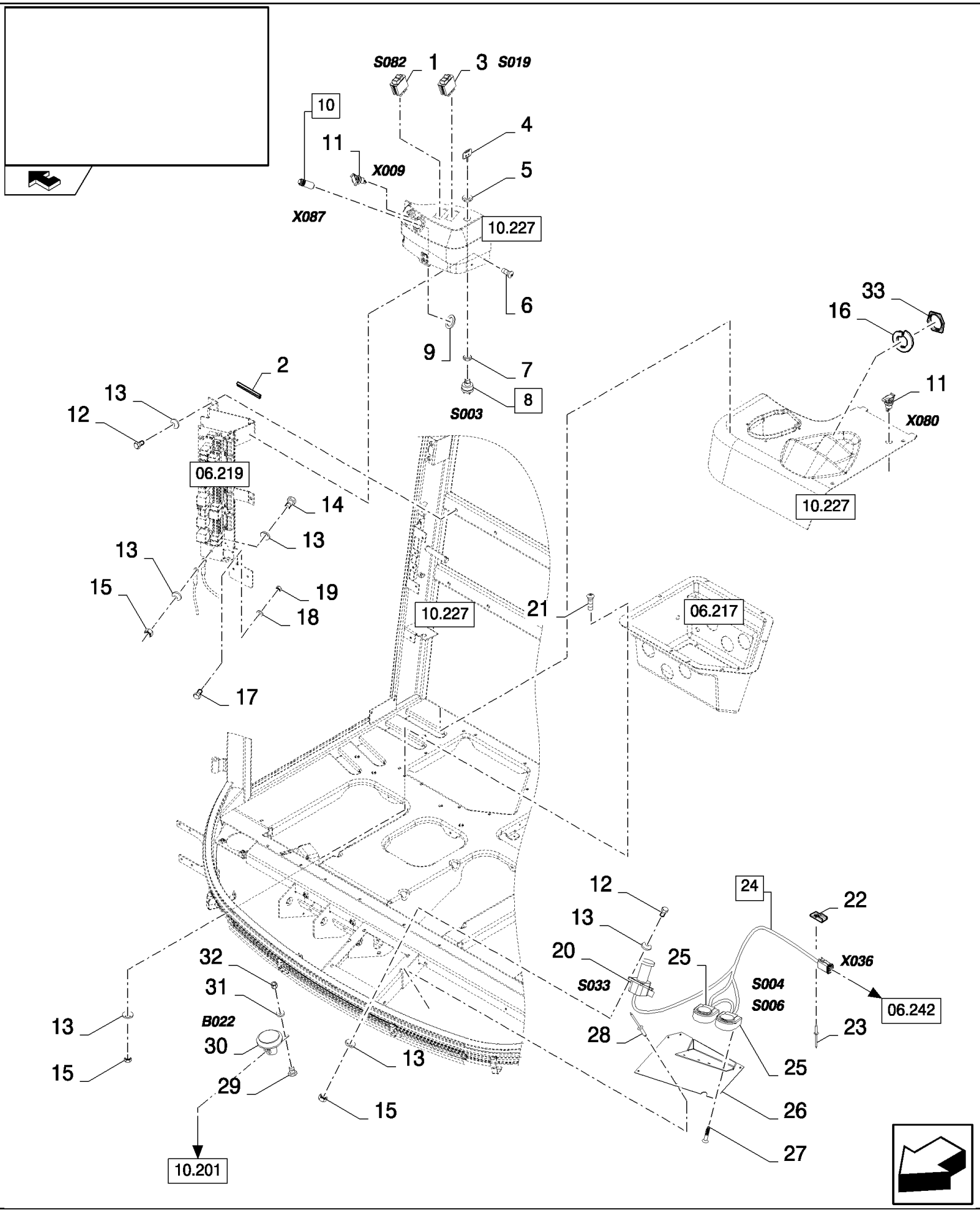

CSX7080 C659 - COMBINE (9/06-8/08)

06.218(01) CAB, MAIN WIRING HARNESS

ссылка	Номер детали	Кол-во	Описание
1	87378257	1	SWITCH,
2	80401310	1	PROFILE, L=0.47M
3	87381105	1	
4	9995262	2	KEY, IGNITION,
5	3903198	1	
6	86511042	3	SCREW, Cross Pan Hd, M4 x 16,
7	NSS	1	NOT SERVICED SEPARATELY,
8	3964212	1	SWITCH, (7)
9	NSS	1	NOT SERVICED SEPARATELY,
10	84038796	1	LIGHTER, CIGARETTE, (9)
11	374418	1	SOCKET, POWER,
12	86508568	4	SCREW, Hex, M6 x 16, 8.8,
13	322357	18	WASHER, SPRING, Belleville, M6,
14	120100	1	BOLT, Hex, M6 x 20, 8.8,
15	9706755	10	NUT, M6, Cl 8,
16	636665	3	WASHER, LOCK,
17	86511816	4	SCREW, Cross Pan Hd, M3 x 16,
18	412548	8	WASHER, 4MM
19	86508812	4	NUT, M3, Cl 8,
20	84320767	1	SWITCH, UNLOADING AUGER
21	86511829	7	SCREW, Cross Pan Hd, M6 x 16,
22	84058832	1	CLIP,
23	445394	1	RIVET, Pop, M4.8 x 12.7, Rivet
24	84807839	1	PEDAL, (25) REEL, SEE FIGURE 06.701
25	9833626	2	PEDAL, REEL
26	84807918	1	SUPPORT,
27	87035701	4	SCREW, SELF TAPPING, Hex Wash Hd, #4 x 3/4",
28	425521	6	RIVET,
29	43129	1	BOLT, Hex, M8 x 40, 8.8,
30	354374	1	HORN,
31	322358	1	WASHER, SPRING, Belleville, M8,
32	9706690	1	NUT, M8, Cl 8,
33	86619907	3	NUT,

06.218(A 01) SENSOR, SELF LEVELING, CAB, SMART SIEVE

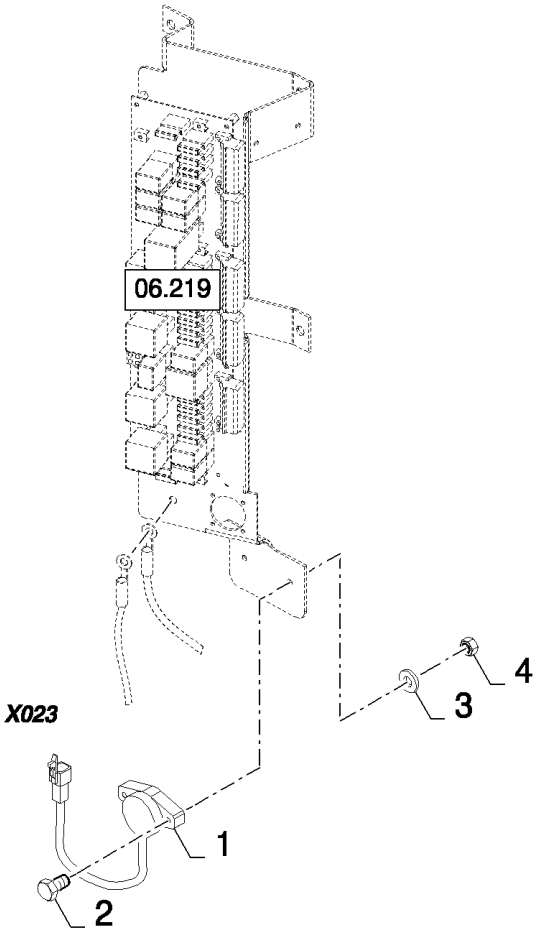

CSX7080 C659 - COMBINE (9/06-8/08)

06.218(A 01) SENSOR, SELF LEVELING, CAB, SMART SIEVE

ссылка	Номер детали	Кол-во	Описание
1	87026294	1	SENSOR,
2	120100	2	BOLT, Hex, M6 x 20, 8.8,
3	322357	2	WASHER, SPRING, Belleville, M6,
4	9706755	2	NUT, M6, Cl 8,

06.219(01) PRINTED CIRCUIT

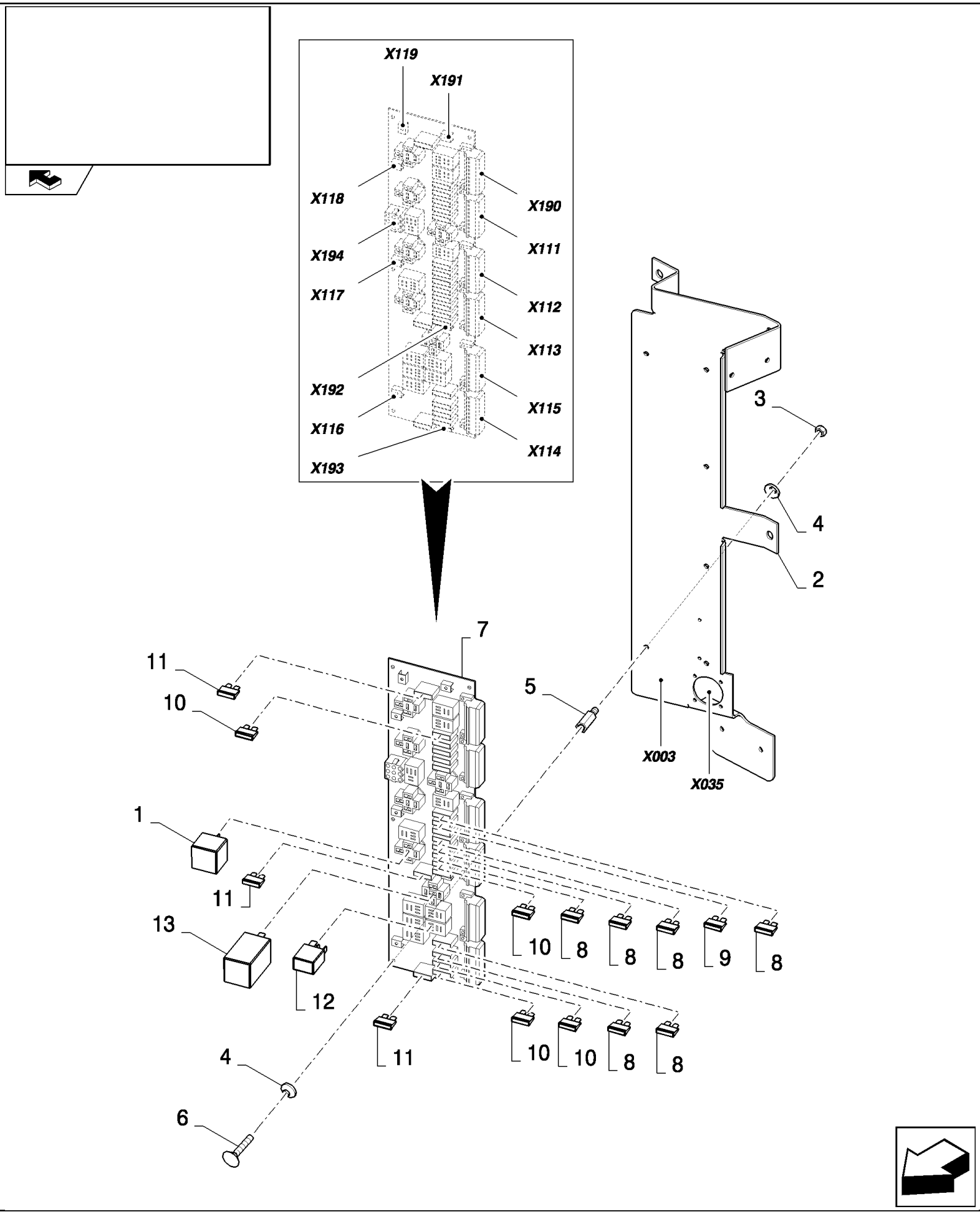

CSX7080 C659 - COMBINE (9/06-8/08)

06.219(01) PRINTED CIRCUIT

ссылка	Номер детали	Кол-во	Описание
1	84000651	5	RELAY,
2	84433435	1	SUPPORT,
3	100012	7	NUT, M4, Cl 8,
4	322355	14	WASHER, Belleville, M4,
5	84814397	7	BUSHING,
6	86511823	7	SCREW, Cross Pan Hd, M4 x 8, M4x8
7	84452526	1	BOARD, PRINTED CIRCUIT, , BSN C631
7	87394096	1	BOARD, PRINTED CIRCUIT, , ASN D632
8	9811773	3	FUSE, 10A
9	9504310	3	FUSE, 25A
10	9504308	10	FUSE, 15A
11	84038658	3	FUSE, 40A
12	86509590	6	RELAY,
13	9813500	1	FLASHER UNIT,

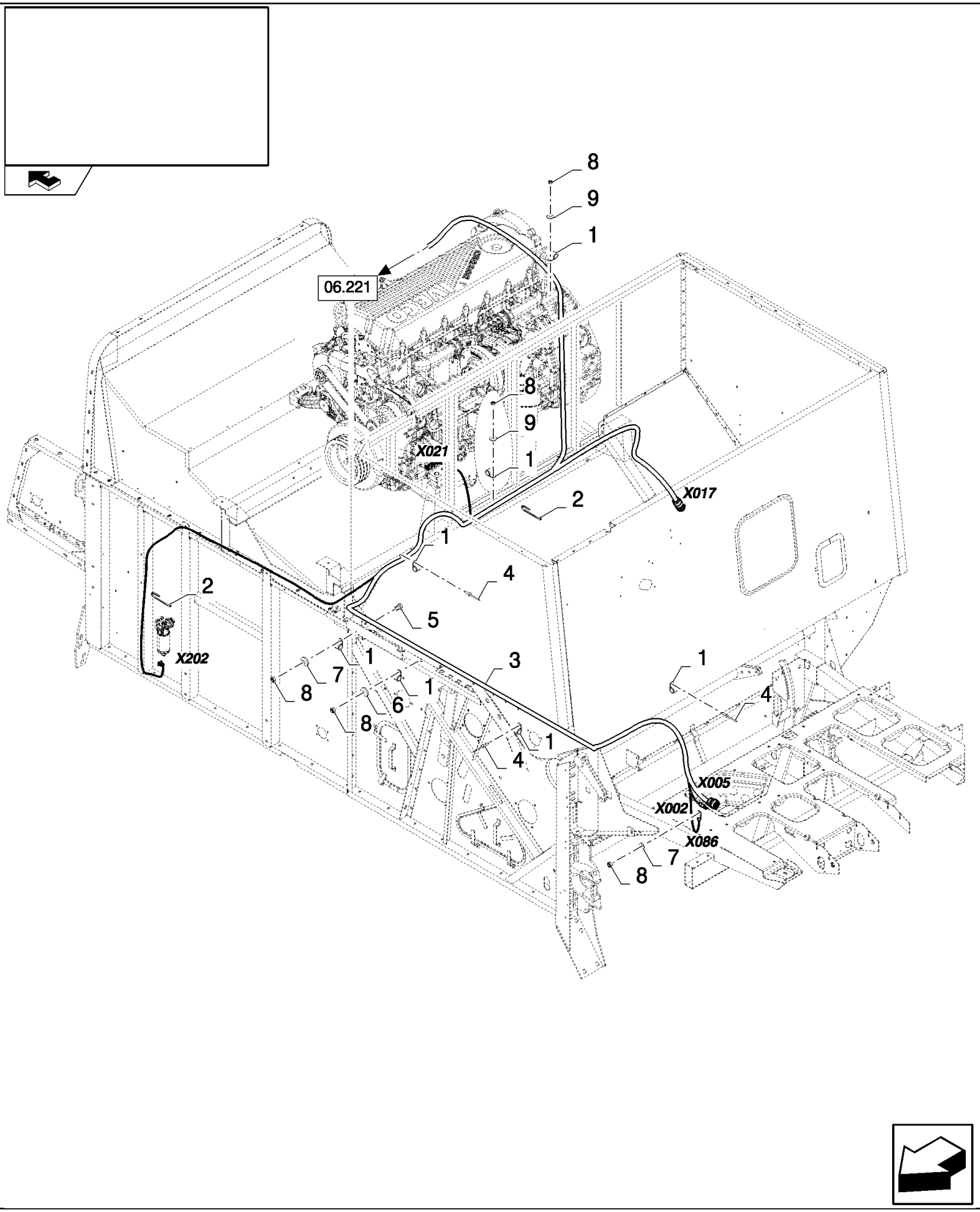
06.221
8
9
1
8
9
1
X021
2
X017
1
4
2
5
X202
1
7
8
3
1
6
8
1
4
1
4
X005
X002
X086
7
8

CSX7080 C659 - COMBINE (9/06-8/08)

06.220(A 01) ENGINE ELECTRICITY

ссылка	Номер детали	Кол-во	Описание
1	86628564	11	CLAMP, 1 1/4", Insul, 3/8" Bolt,
2	86566989	5	STRAP, CABLE,
3	84461676	1	HARNESS, WIRE, , BSN C615
3	87732550	1	HARNESS, WIRE, , BSN F616631
3	87742088	1	HARNESS, WIRE, , ASN D632
4	9512290	5	RIVET,
5	120100	1	BOLT, Hex, M6 x 20, 8.8,
6	9824259	1	WASHER, M6 x 12 x 1.6,
7	322357	2	WASHER, SPRING, Belleville, M6,
8	9706755	5	NUT, M6, Cl 8,
9	140040	2	WASHER, M6 x 22 x 2,

06.221(A 01) ENGINE ELECTRICITY

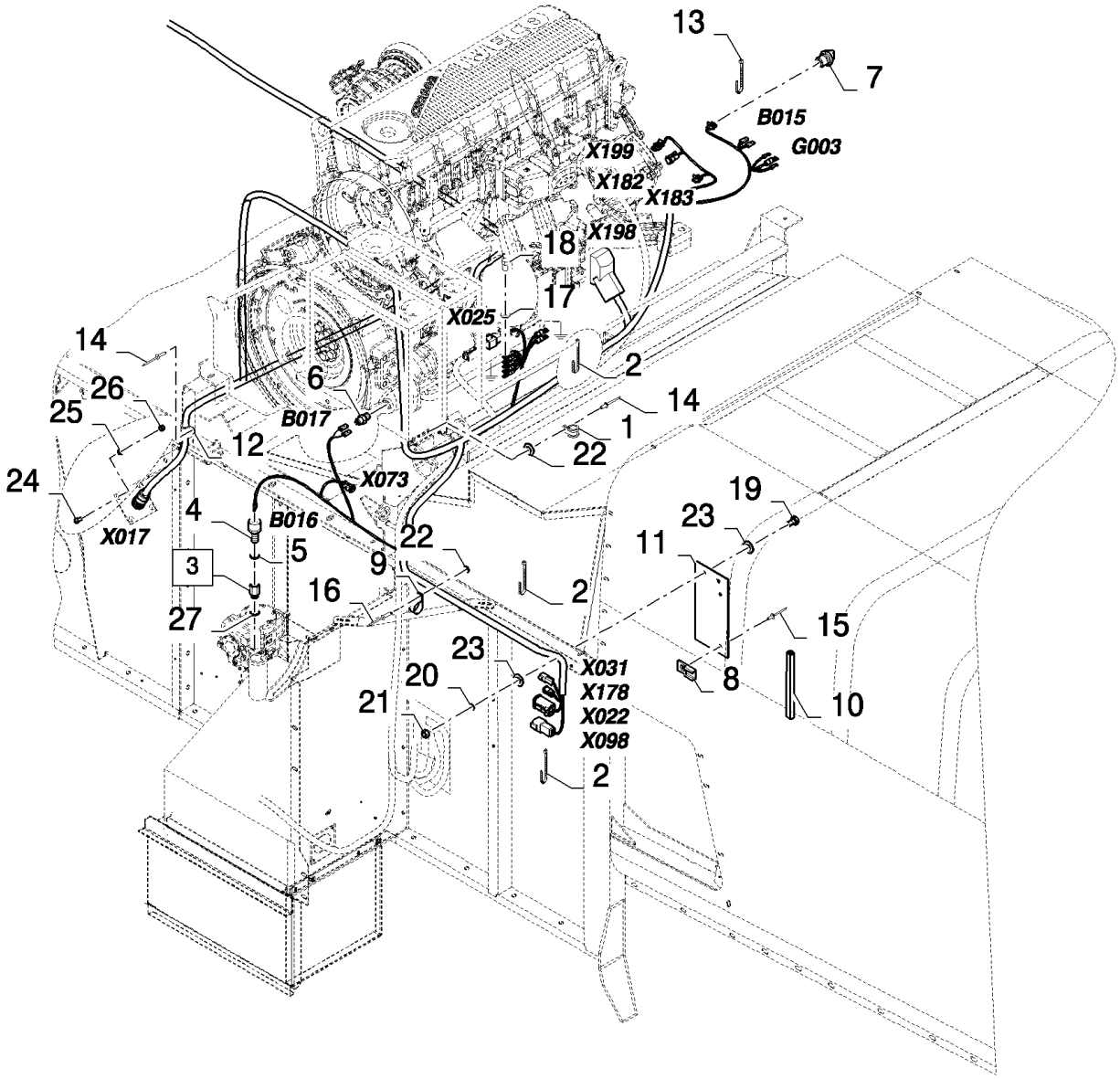

CSX7080 C659 - COMBINE (9/06-8/08)

06.221(A 01) ENGINE ELECTRICITY

ссылка	Номер детали	Кол-во	Описание
1	86628564	2	CLAMP, 1 1/4", Insul, 3/8" Bolt,
2	86566989	20	STRAP, CABLE,
3	9811374	1	CONNECTOR, HYD., (27)
4	434529	1	SENDER UNIT,
5	220049	1	WASHER, SEALING,
6	84021678	1	SENDER UNIT,
7	84043184	1	SENDER UNIT,
8	84058832	2	CLIP,
9	84818443	2	CLAMP,
10	401266	1	STRIP-GASKET, L=240MM
11	84441311	1	PLATE,
12	84818442	2	CLAMP,
13	86566990	2	STRAP, CABLE,
14	9512290	4	RIVET,
15	445394	2	RIVET, Pop, M4.8 x 12.7,
16	9512289	2	
17	322358	1	WASHER, SPRING, Belleville, M8,
18	43128	1	BOLT, Hex, M8 x 30, 8.8,
19	120100	2	BOLT, Hex, M6 x 20, 8.8,
20	322357	2	WASHER, SPRING, Belleville, M6,
21	9706755	2	NUT, M6, Cl 8,
22	322356	4	WASHER,
23	140016	4	WASHER, M8 x 16 x 1.6,
24	86511816	4	SCREW, Cross Pan Hd, M3 x 16,
25	412547	4	WASHER, Serr, M3,
26	86508812	4	NUT, M3, Cl 8,
27	9617873	1	O-RING, 6-1, 90 Duro, .468" ID x .078" Thk,

06.222(A 01) ENGINE ELECTRICITY

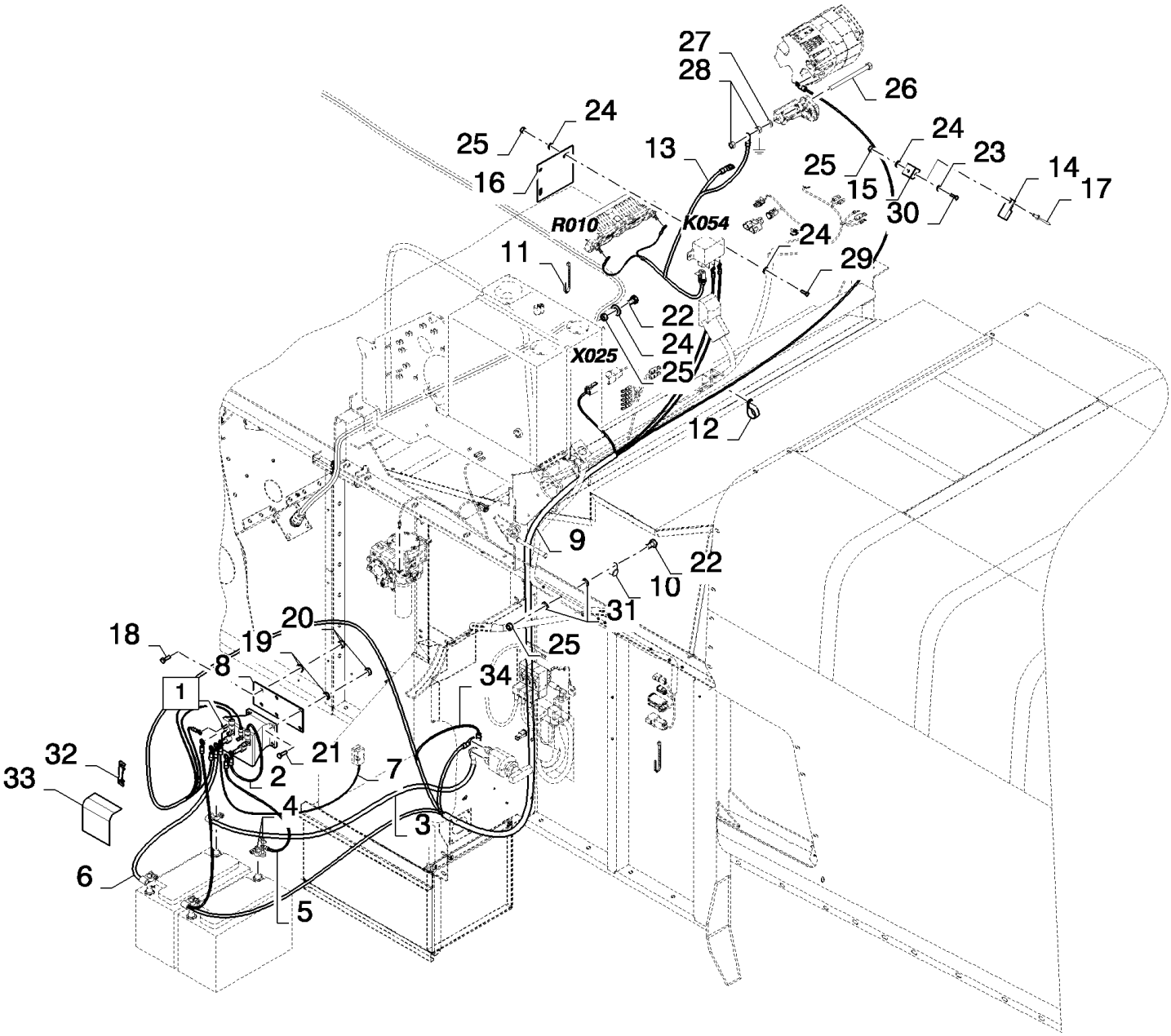

CSX7080 C659 - COMBINE (9/06-8/08)

06.222(A 01) ENGINE ELECTRICITY

ссылка	Номер детали	Кол-во	Описание
1	389120	1	RELAY, (32, 33)
2	84461865	1	HARNESS, WIRE,
3	84461858	1	CABLE, BATTERY (NEG),
4	86606349	2	CONNECTOR, WIRE,
5	84461856	1	CABLE, BATTERY (NEG),
6	84461857	1	CABLE, BATTERY (NEG),
7	84461866	1	HARNESS, WIRE,
8	87378658	1	SUPPORT,
9	84461750	1	HARNESS, WIRE,
10	86628564	4	CLAMP, 1 1/4", Insul, 3/8" Bolt,
11	86566989	3	STRAP, CABLE,
12	700514	1	CLAMP,
13	87516806	1	HARNESS, WIRE,
14	84058832	1	CLIP,
15	84439595	1	BRACKET,
16	87379485	1	SUPPORT,
17	445394	1	RIVET, Pop, M4.8 x 12.7,
18	120104	2	SCREW, Hex, M8 x 20, 8.8,
19	322358	6	WASHER, SPRING, Belleville, M8,
20	9706690	6	NUT, M8, Cl 8,
21	43128	4	BOLT, Hex, M8 x 30, 8.8,
22	120100	4	BOLT, Hex, M6 x 20, 8.8,
23	9824259	1	WASHER, M6 x 12 x 1.6,
24	322357	6	WASHER, SPRING, Belleville, M6,
25	9706755	6	NUT, M6, Cl 8,
26	380423	1	BOLT, Hex, M12 x 170, 8.8,
27	140046	1	WASHER, Belleville, M12,
28	9706685	2	NUT, M12, Cl 8,
29	86508568	1	SCREW, Hex, M6 x 16, 8.8,
30	86977789	1	SCREW, Hex, M6 x 35, 8.8,
31	412649	2	WASHER, SPRING, Belleville, M6,
32	420580	4	PLATE, 80AMP
33	NSS	1	NOT SERVICED SEPARATELY,
34	87732072	1	HARNESS, WIRE, , ASN D632

06.225(01) STANDARD LIGHTS, REAR

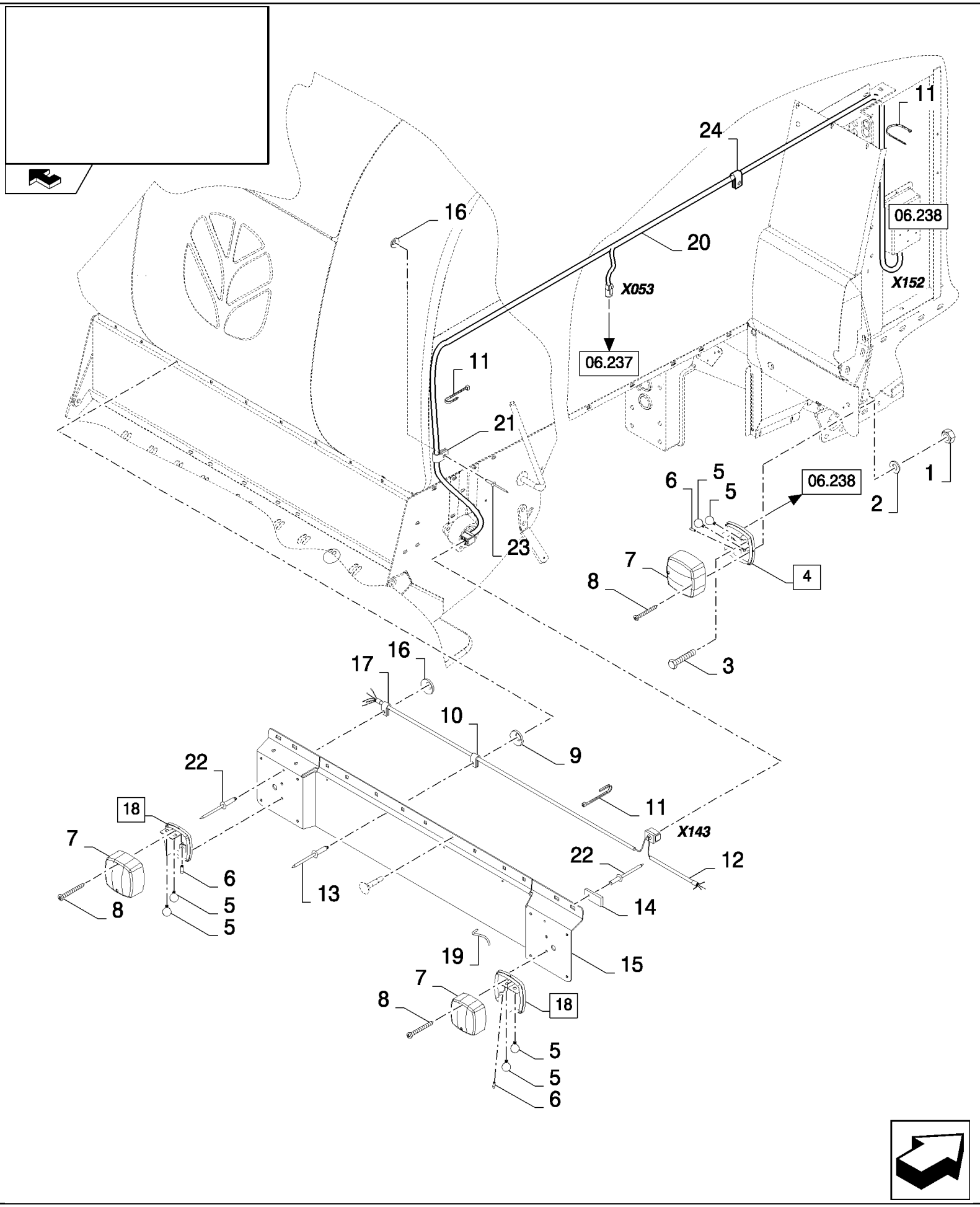

CSX7080 C659 - COMBINE (9/06-8/08)

06.225(01) STANDARD LIGHTS, REAR

ссылка	Номер детали	Кол-во	Описание
1	412152	8	NUT, LOCK, M6 x 1, Cl 8.8,
2	86588450	8	WASHER, M6,
3	86511830	8	SCREW, Cross Pan Hd, M6 x 20,
4	84037090	2	LAMP, TAIL, (5 to 8)
5	398877	8	BULB,
6	418870	4	BULB,
7	NSS	AR	NOT SERVICED SEPARATELY,
8	NSS	AR	NOT SERVICED SEPARATELY,
9	322355	4	WASHER, Belleville, M4,
10	332401	4	CLAMP, WIRE,
11	9993154	6	ELASTIC STRAP,
12	84447791	1	HARNESS, WIRE, , SEE FIGURE 06.559
13	425520	4	RIVET,
14	84807267	1	CONNECTOR, WIRE,
15	84447433	1	PLATE,
16	322356	2	WASHER, 5MM
17	9507807	1	CLAMP,
18	84037093	2	LAMP, (5 to 8)
18	84037090	2	LAMP, TAIL, (5 to 8), FOR GERMANY AND HUNGARY ONLY
19	350674	12	CONNECTOR, WIRE,
20	84437263	1	HARNESS, WIRE, , SEE FIGURE 06.523
21	84818443	1	CLAMP,
22	445394	2	RIVET, Pop, M4.8 x 12.7,
23	9512290	1	RIVET,
24	9706748	1	CLAMP, 5/8", Insul, 5/16" Bolt, , ASN D580

06.226(01) BATTERY

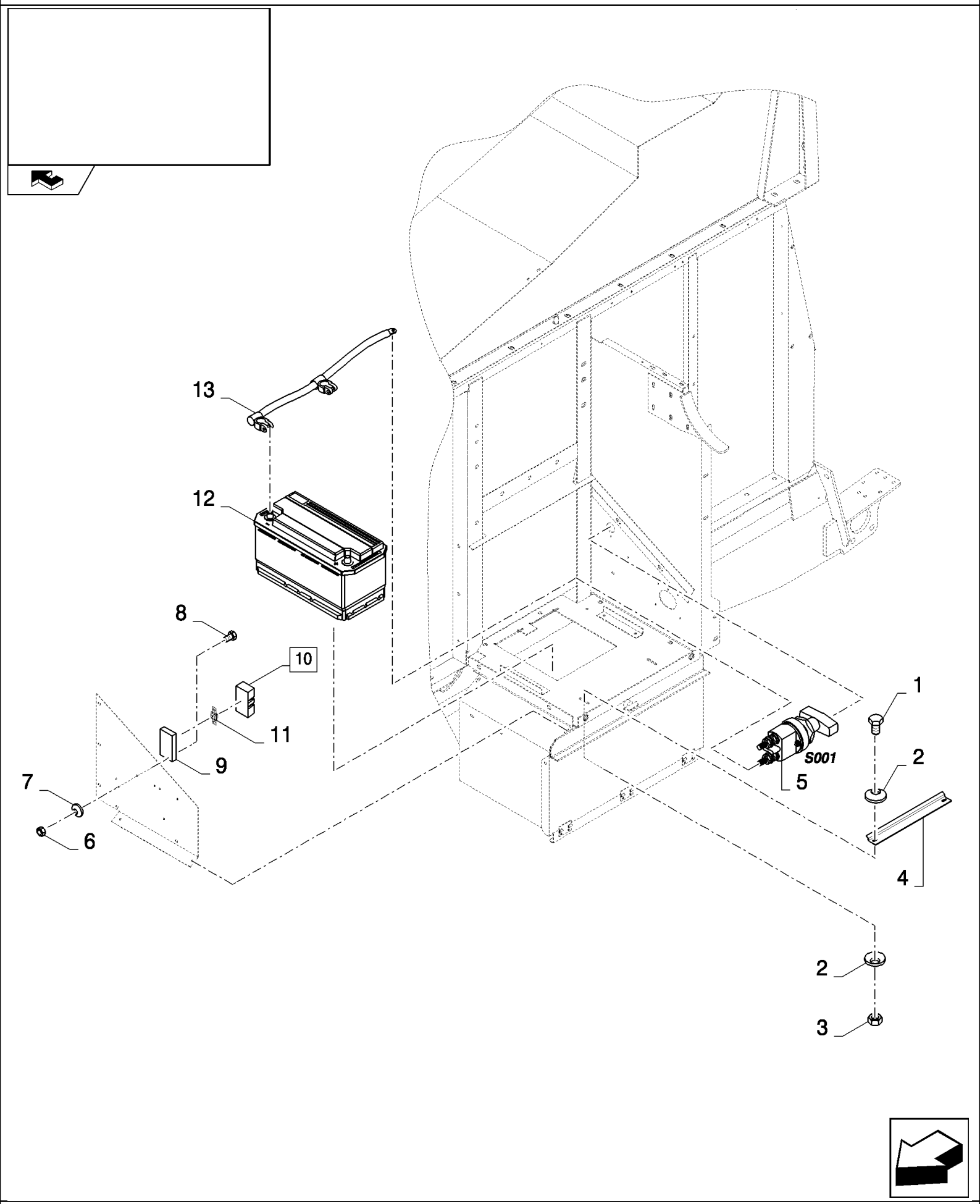

06.226(01) BATTERY

ссылка	Номер детали	Кол-во	Описание
1	86508568	2	SCREW, Hex, M6 x 16, 8.8,
2	322357	4	WASHER, SPRING, Belleville, M6, , BSN C543
2	322357	6	WASHER, SPRING, Belleville, M6, , ASN D544
3	9706755	2	NUT, M6, Cl 8, , BSN C543
3	9706755	4	NUT, M6, Cl 8, , ASN D544
4	84435776	1	PLATE, FIXING,
5	84998012	1	SWITCH ASSY,
6	86508812	2	NUT, M3, Cl 8,
7	86509827	2	WASHER, LOCK, M3,
8	86511816	2	SCREW, Cross Pan Hd, M3 x 16,
9	NSS	1	NOT SERVICED SEPARATELY,
10	84078784	1	FUSE HOLDER, (9)
11	84078783	1	FUSE, 80A
12	NS	2	NOT SERVICED,
13	84400865	1	CABLE, BATTERY (NEG), , SEE FIGURE 06.504

06.227(01) ELECTRICS ON HITCH

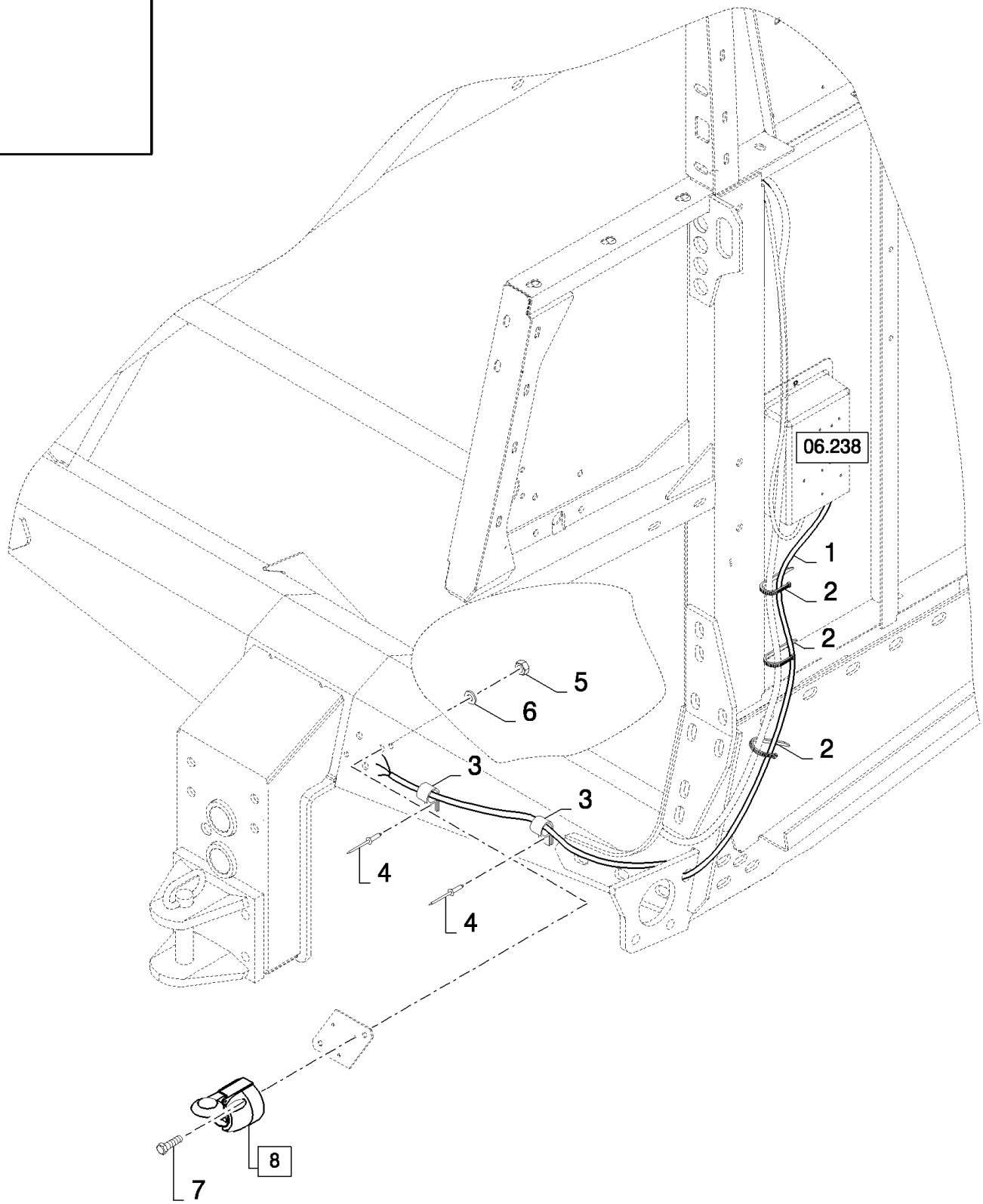

CSX7080 C659 - COMBINE (9/06-8/08)

06.227(01) ELECTRICS ON HITCH

ссылка	Номер детали	Кол-во	Описание
1	84437294	1	HARNESS, WIRE, , SEE FIGURE 06.525
2	9993154	5	ELASTIC STRAP,
3	9503929	2	CLAMP,
4	9512290	2	RIVET,
5	100012	3	NUT, M4, Cl 8,
6	322355	3	WASHER, Belleville, M4,
7	86585707	3	SCREW, Cross Pan Hd, M4 x 35, M4x35
8	398224	1	SOCKET, POWER,
9	NSS	1	NOT SERVICED SEPARATELY,

06.228(01) GRAINTANK, LEVEL INDICATOR

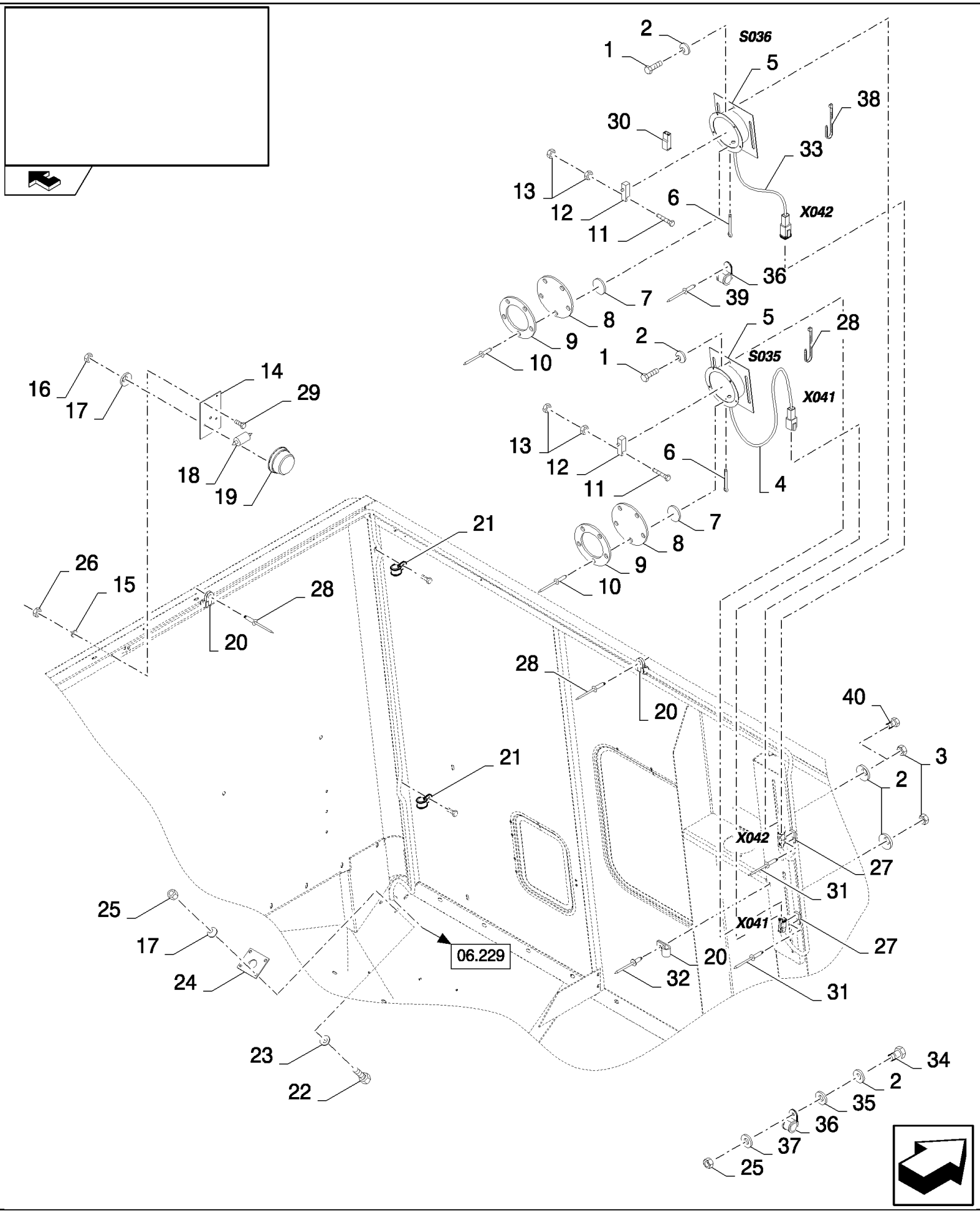

CSX7080 C659 - COMBINE (9/06-8/08)

06.228(01) GRAINTANK, LEVEL INDICATOR

ссылка	Номер детали	Кол-во	Описание
1	120104	4	SCREW, Hex, M8 x 20, 8.8,
2	322358	8	WASHER, SPRING, Belleville, M8,
3	9706690	4	NUT, M8, Cl 8,
4	84441356	1	HARNESS, WIRE, , SEE FIGURE 06.540
5	450336	2	CASE,
6	9512667	2	PIN, SPLIT (COTTER), M2 x 20,
7	250244	2	WASHER,
8	435233	2	CANVAS,
9	457556	2	RING,
10	425520	10	RIVET,
11	301571	4	SCREW, M3x25
12	399159	2	SWITCH,
13	86508812	8	NUT, M3, Cl 8,
14	84032147	1	BRACKET,
15	322355	2	WASHER, Belleville, M4,
16	86508813	2	NUT, M5, Cl 8,
17	322357	AR	WASHER, SPRING, Belleville, M6,
18	470016	1	BULB,
19	336483	1	LIGHT, TAIL,
20	84818442	11	CLAMP,
21	86566990	AR	STRAP, CABLE,
22	86508568	4	SCREW, Hex, M6 x 16, 8.8,
23	9824259	4	WASHER, M6 x 12 x 1.6,
24	9507860	2	PLATE,
25	9706755	AR	NUT, M6, Cl 8,
26	100012	2	NUT, M4, Cl 8,
27	84058832	2	CLIP,
28	9512290	AR	RIVET,
29	412064	2	SCREW, Hex, M4 x 16, 8.8, Full Thd,
30	441159	4	CONNECTOR, WIRE,
31	445394	2	RIVET, Pop, M4.8 x 12.7,
32	9512968	AR	RIVET,
33	84449919	1	HARNESS, WIRE, , SEE FIGURE 06.571
34	120100	1	BOLT, Hex, M6 x 20, 8.8,
35	140040	2	WASHER, M6 x 22 x 2,
36	9507809	1	CLAMP,
37	322356	1	WASHER,
38	9993154	2	ELASTIC STRAP,
39	9512290	1	RIVET,
40	120103	2	BOLT, Hex, M8 x 16, 8.8,

06.229(A 01) GRAINTANK ELECTRICITY

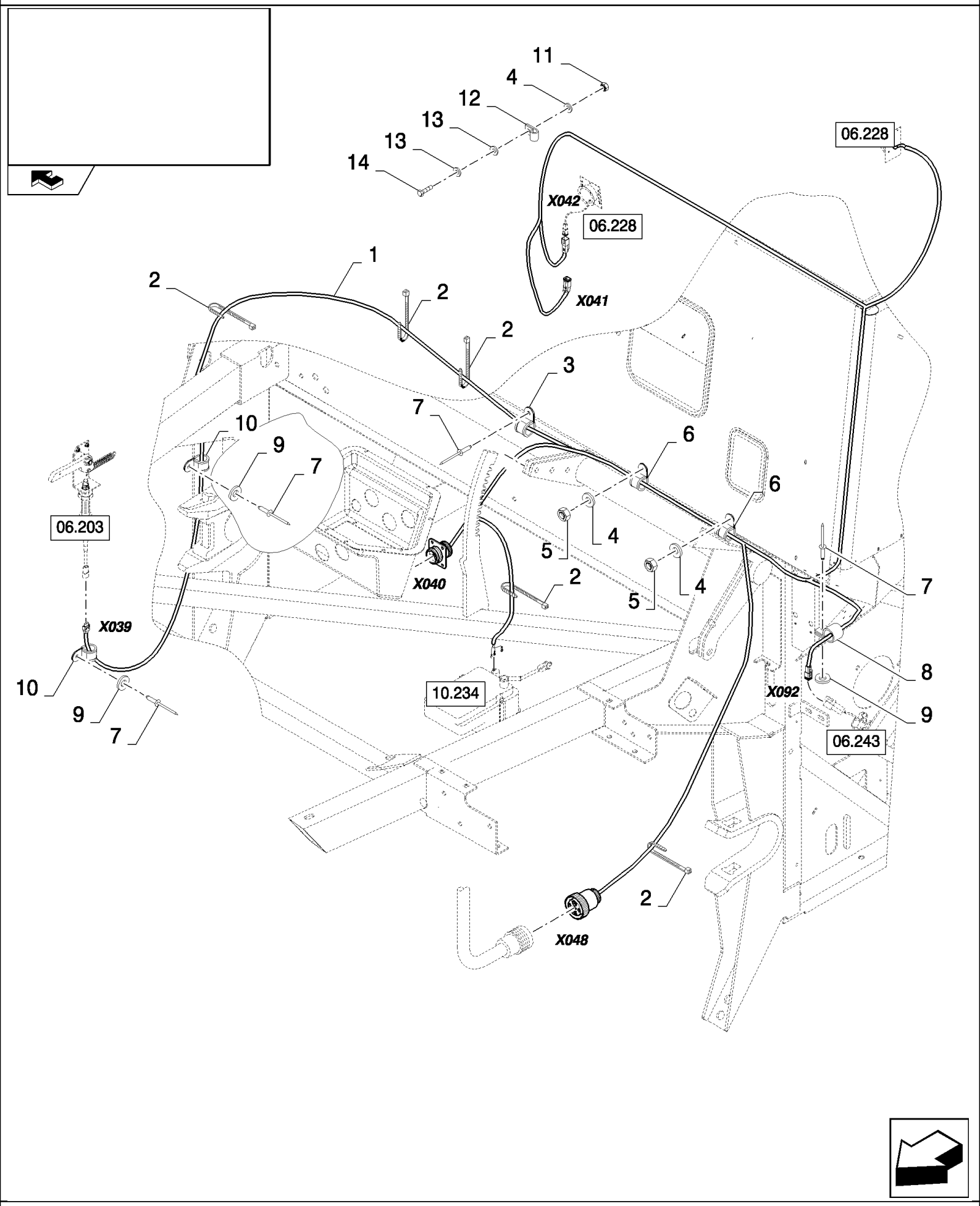

CSX7080 C659 - COMBINE (9/06-8/08)

06.229(A 01) GRAINTANK ELECTRICITY

ссылка	Номер детали	Кол-во	Описание
1	87370061	1	HARNESS, WIRE, , SEE FIGURE 06.575
2	86566990	6	STRAP, CABLE,
3	84818443	3	CLAMP,
4	322357	3	WASHER, SPRING, Belleville, M6,
5	412152	3	NUT, LOCK, M6 x 1, Cl 8.8,
6	9706748	8	CLAMP, 5/8", Insul, 5/16" Bolt,
7	9512290	9	RIVET,
8	84818442	3	CLAMP,
9	322356	13	WASHER, 5MM
10	84818441	3	CLAMP,
11	9706755	1	NUT, M6, Cl 8,
12	9507809	2	CLAMP,
13	140040	2	WASHER, M6 x 22 x 2,
14	120100	1	BOLT, Hex, M6 x 20, 8.8,

06.230(01) SPREADER HOOD, REMOTE CONTROL

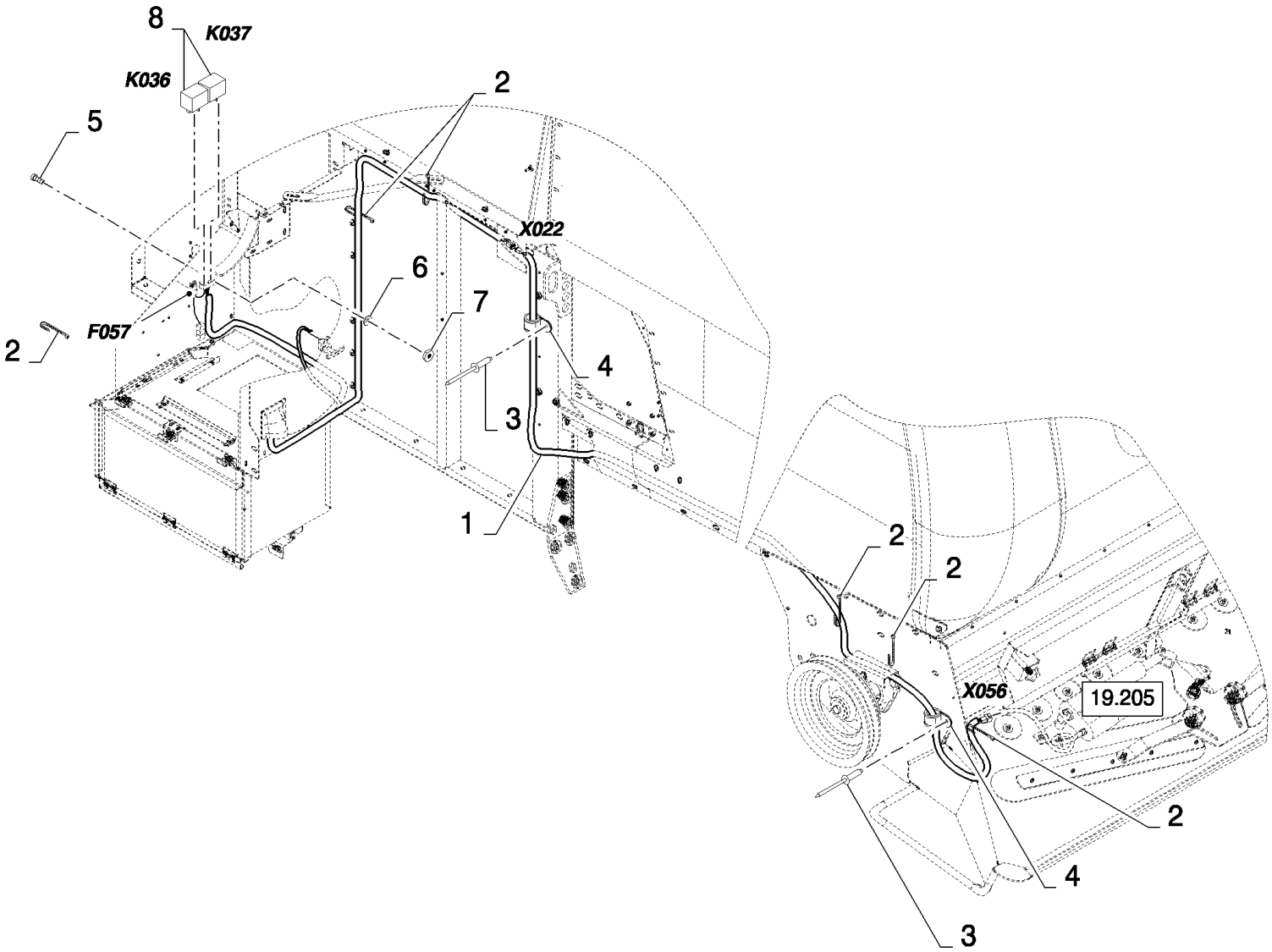

06.230(01) SPREADER HOOD, REMOTE CONTROL

ссылка	Номер детали	Кол-во	Описание
1	84441436	1	HARNESS, WIRE, , SEE FIGURE 06.544
2	89993154	14	CLAMP,
3	9512290	6	RIVET,
4	84818442	6	CLAMP,
5	44334	2	SCREW, Cross Pan Hd, M4 x 12,
6	322355	2	WASHER, Belleville, M4,
7	100012	2	NUT, M4, Cl 8,
8	84000651	2	RELAY,

06.231(01) VERTICAL KNIFE

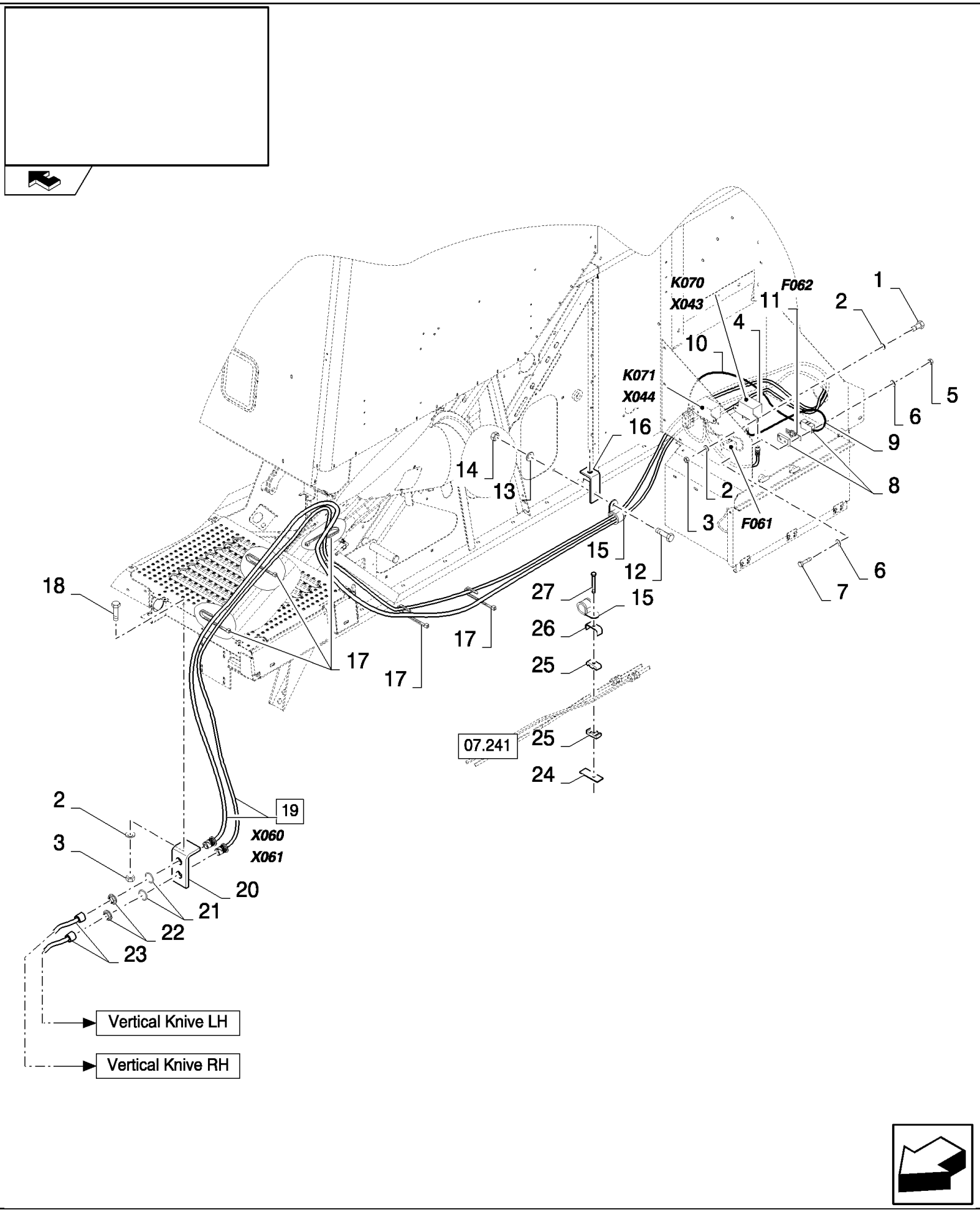

06.231(01) VERTICAL KNIFE

ссылка	Номер детали	Кол-во	Описание
1	86508568	2	SCREW, Hex, M6 x 16, 8.8,
2	322357	6	WASHER, SPRING, Belleville, M6,
3	9706755	4	NUT, M6, Cl 8,
4	86619908	1	RELAY,
5	86508812	2	NUT, M3, Cl 8,
6	86509827	4	WASHER, LOCK, M3,
7	86511816	2	SCREW, Cross Pan Hd, M3 x 16,
8	84078784	1	FUSE HOLDER,
9	84444505	1	HARNESS, WIRE, , SEE FIGURE 06.554
10	84444504	1	HARNESS, WIRE, , SEE FIGURE 06.553
11	84320118	1	FUSE, 40A
12	120104	2	SCREW, Hex, M8 x 20, 8.8, , BSN C543
13	322358	2	WASHER, SPRING, Belleville, M8, , BSN C543
14	9706690	2	NUT, M8, Cl 8, , BSN C543
15	9513271	1	CLAMP,
16	84446966	1	BRACKET, , BSN C543
17	89993154	8	CLAMP,
18	120100	1	BOLT, Hex, M6 x 20, 8.8,
19	84444502	1	HARNESS, WIRE, (21, 22), SEE FIGURE 06.549/06.550
20	84444610	1	BRACKET,
21	NSS	2	NOT SERVICED SEPARATELY,
22	NSS	2	NOT SERVICED SEPARATELY,
23	84444503	1	HARNESS, WIRE, , SEE FIGURE 06.551/06.552
24	434097	1	BRACKET, , ASN D544
25	430357	2	CLAMP, , ASN D544
26	431941	1	SUPPORT, , ASN D544
27	120056	1	SCREW, Hex, M6 x 50, 8.8, , ASN D544

06.232(01) UPPER FRAME, ELECTRICITY

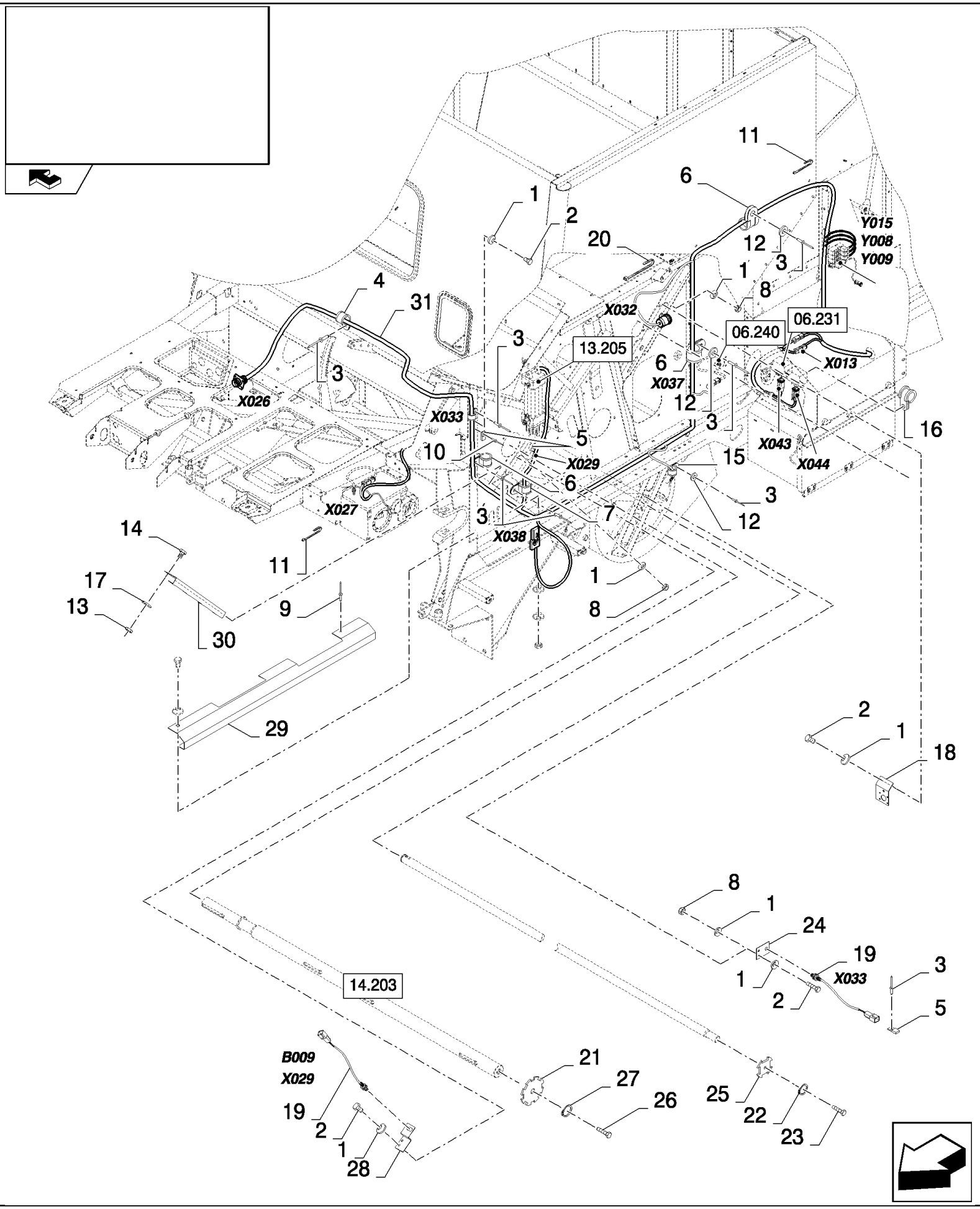

CSX7080 C659 - COMBINE (9/06-8/08)

06.232(01) UPPER FRAME, ELECTRICITY

ссылка	Номер детали	Кол-во	Описание
1	322357	10	WASHER, SPRING, Belleville, M6,
2	86977786	5	BOLT, Hex, M6 x 25, 8.8,
3	9512290	13	RIVET,
4	84818445	4	CLAMP,
5	84058832	2	CLIP,
6	84818444	7	CLAMP,
7	84818443	1	CLAMP,
8	9706755	5	NUT, M6, Cl 8,
9	9512968	2	RIVET,
10	445394	2	RIVET, Pop, M4.8 x 12.7,
11	86566990	5	STRAP, CABLE,
12	322356	7	WASHER, 5MM
13	86508813	1	NUT, M5, Cl 8,
14	120098	1	BOLT, Hex, M5 x 20, 8.8, Full Thd,
15	84818441	1	CLAMP,
16	86010402	1	CLAMP, 1/2", Insul, 3/8" Bolt,
17	9824326	1	WASHER, M5,
18	87341325	1	BRACKET,
19	84058861	2	SENSOR, , SEE FIGURE 06.701
20	86566989	1	STRAP, CABLE,
21	84077929	1	DISC,
22	140045	1	WASHER, SPRING, Belleville, M10,
23	43138	1	SCREW, Hex, M10 x 20, 8.8, Full Thd,
24	84077951	1	BRACKET,
25	84077888	1	DISC,
26	300388	1	SCREW, Hex, M12 x 25, 8.8,
27	140046	1	WASHER, Belleville, M12,
28	84334036	1	BRACKET,
29	84434725	1	SHIELD,
30	84434780	1	SHIELD,
31	87371902	1	HARNESS, WIRE, , SEE FIGURE 06.578

06.232(A 01) UPPER FRAME, ELECTRICITY

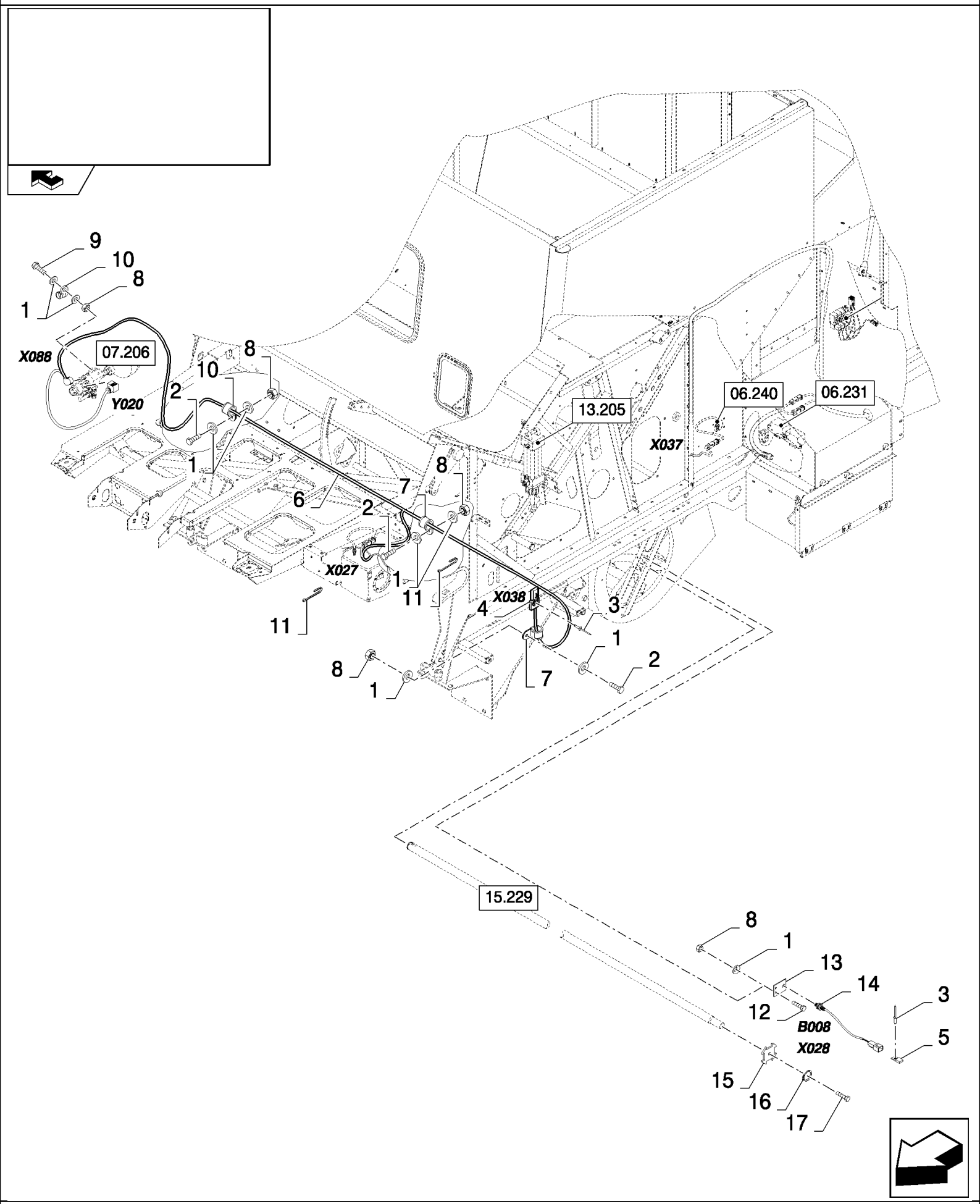

06.232(A 01) UPPER FRAME, ELECTRICITY

ссылка	Номер детали	Кол-во	Описание
1	322357	10	WASHER, SPRING, Belleville, M6,
2	86977786	3	BOLT, Hex, M6 x 25, 8.8,
3	445394	2	RIVET, Pop, M4.8 x 12.7,
4	84807267	1	CONNECTOR, WIRE,
5	84058832	1	CLIP,
6	84452029	1	HARNESS, WIRE, , SEE FIGURE 06.573, BSN C614
6	87598497	1	HARNESS, WIRE, , SEE FIGURE 06.591, ASN D615
7	84818443	2	CLAMP,
8	9706755	6	NUT, M6, Cl 8,
9	43118	1	BOLT, Hex, M6 x 40, 8.8,
10	84818442	2	CLAMP,
11	9993154	5	ELASTIC STRAP, , BSN C614
11	9993154	7	ELASTIC STRAP, , ASN D615
12	86508568	2	SCREW, Hex, M6 x 16, 8.8,
13	84334070	1	BRACKET,
14	84058861	1	SENSOR, , SEE FIGURE 06.701
15	84077888	1	DISC,
16	140045	1	WASHER, SPRING, Belleville, M10,
17	43138	1	SCREW, Hex, M10 x 20, 8.8, Full Thd,

06.232(C 01) STRAW FLOW BEATER

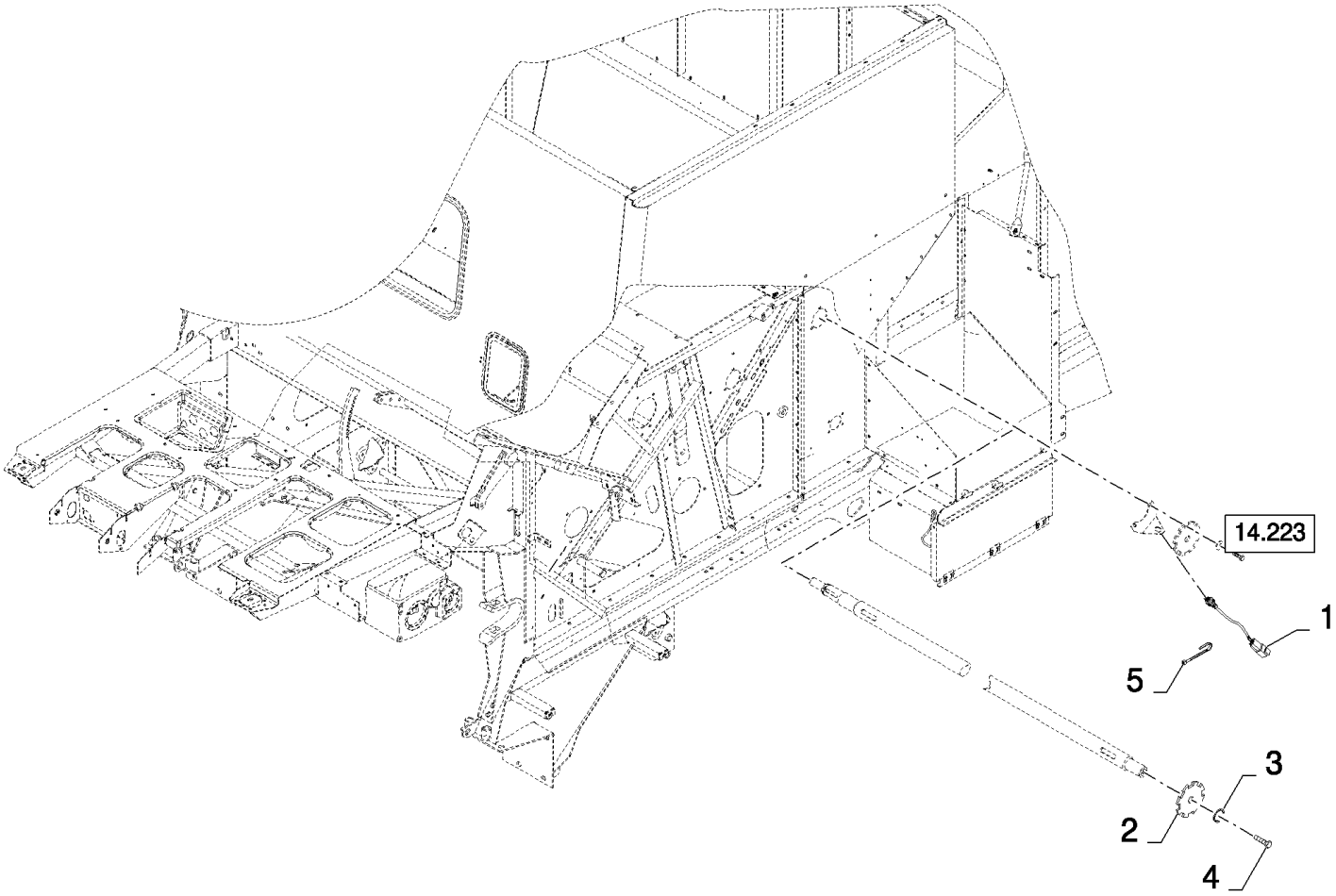

CSX7080 C659 - COMBINE (9/06-8/08)

06.232(C 01) STRAW FLOW BEATER

ссылка	Номер детали	Кол-во	Описание
1	84058861	1	SENSOR,
2	84077929	1	DISC,
3	140045	2	WASHER, SPRING, Belleville, M10,
4	43138	2	SCREW, Hex, M10 x 20, 8.8, Full Thd,
5	86566990	2	STRAP, CABLE,

06.233(01) PRINTED CIRCUIT

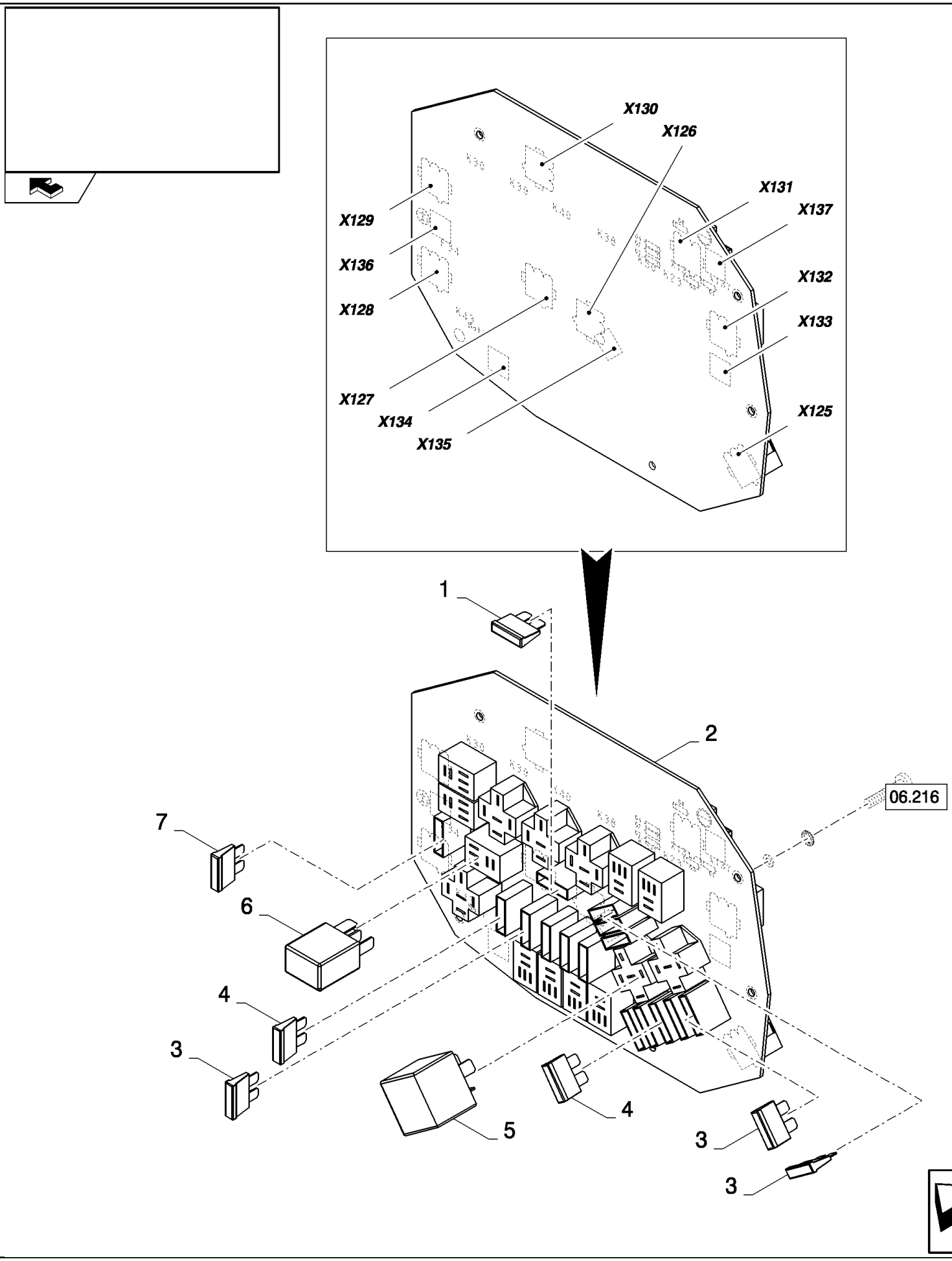

CSX7080 C659 - COMBINE (9/06-8/08)

06.233(01) PRINTED CIRCUIT

ссылка	Номер детали	Кол-во	Описание
1	84032356	1	FUSE,
2	84441163	1	BOARD, PRINTED CIRCUIT,
3	9504308	9	FUSE,
4	9811773	1	FUSE,
5	86529089	6	RELAY,
6	86509590	7	RELAY,
7	9504310	2	FUSE,

06.234(01) CAB ROOF LIGHTS - WIRING

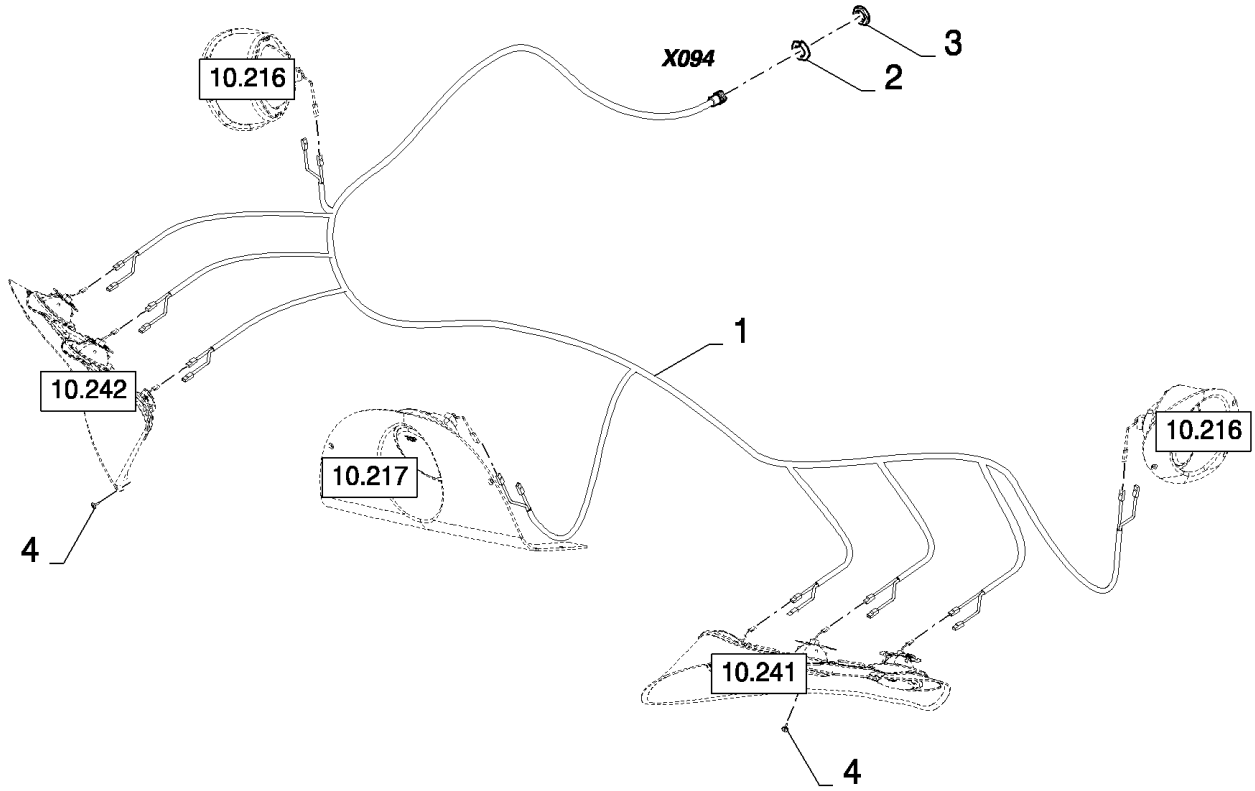

CSX7080 C659 - COMBINE (9/06-8/08)

06.234(01) CAB ROOF LIGHTS - WIRING

ссылка	Номер детали	Кол-во	Описание
1	84437197	1	HARNESS, WIRE, , SEE FIGURE 06.518, BSN C543
1	87399335	1	HARNESS, WIRE, , SEE FIGURE 06.590, ASN D544
2	84607513	1	WASHER, LOCK,
3	86619907	1	NUT,
4	86511042	18	SCREW, Cross Pan Hd, M4 x 16,

CSX7080 C659 - COMBINE (9/06-8/08)

06.235(01) FRONT LIGHTS - FOR AUSTRIA

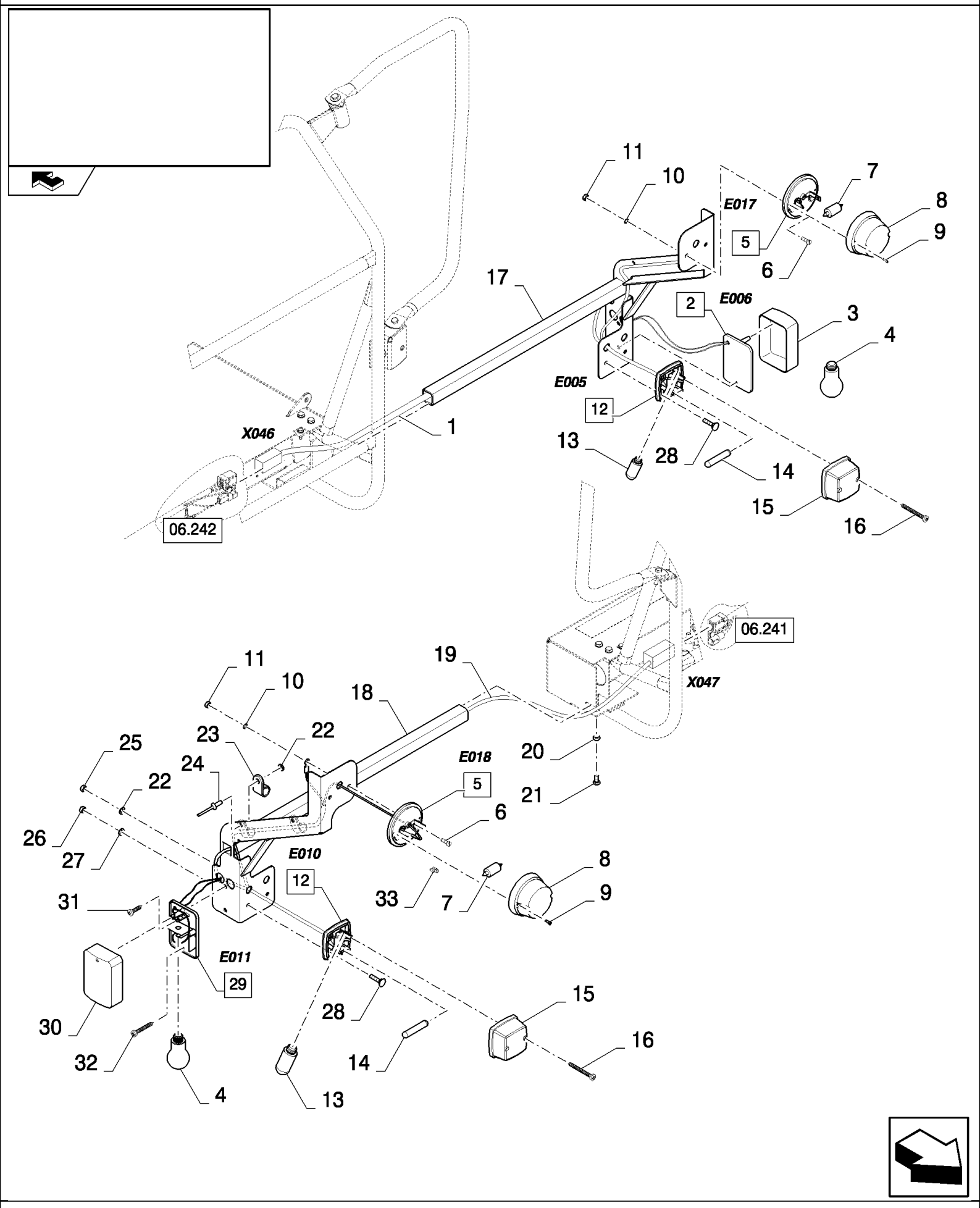

CSX7080 C659 - COMBINE (9/06-8/08)

06.235(01) FRONT LIGHTS - FOR AUSTRIA

ссылка	Номер детали	Кол-во	Описание
1	84448033	1	HARNESS, WIRE, , SEE FIGURE 06.561
2	84011216	1	LAMP ASSY, SIDE, (3,4)
3	NS	1	NOT SERVICED,
4	418870	2	BULB, 12V 10W
5	336483	2	LIGHT, TAIL, (6 to 11)
6	NS	4	NOT SERVICED,
7	470016	2	BULB, 12V 10W
8	NS	2	NOT SERVICED,
9	NS	4	NOT SERVICED,
10	NS	4	NOT SERVICED,
11	NS	4	NOT SERVICED,
12	418871	2	LAMP, (13 to 16)
13	398877	2	BULB, 12V 10W
14	470017	2	BULB, 12V 5W
15	NS	4	NOT SERVICED,
16	NS	4	NOT SERVICED,
17	84448027	1	SUPPORT,
18	84448028	1	SUPPORT,
19	84448032	1	HARNESS, WIRE, , SEE FIGURE 06.560
20	9706690	2	NUT, M8, Cl 8,
21	120103	2	BOLT, Hex, M8 x 16, 8.8,
22	322356	8	WASHER, 5MM
23	84818441	4	CLAMP,
24	445394	4	RIVET, Pop, M4.8 x 12.7, RIVET
25	86508813	4	NUT, M5, Cl 8,
26	100012	4	NUT, M4, Cl 8,
27	322355	4	WASHER, Belleville, M4,
28	86511042	4	SCREW, Cross Pan Hd, M4 x 16,
29	84011215	1	LAMP ASSY, SIDE, (4,30)
30	NS	1	NOT SERVICED,
31	86585709	2	SCREW, Cross Pan Hd, M5 x 10, M5x20
32	120098	2	BOLT, Hex, M5 x 20, 8.8, Full Thd,
33	441159	8	CONNECTOR, WIRE,

06.236(01) ADDITIONAL LIGHTS FOR MAIZE HEADER

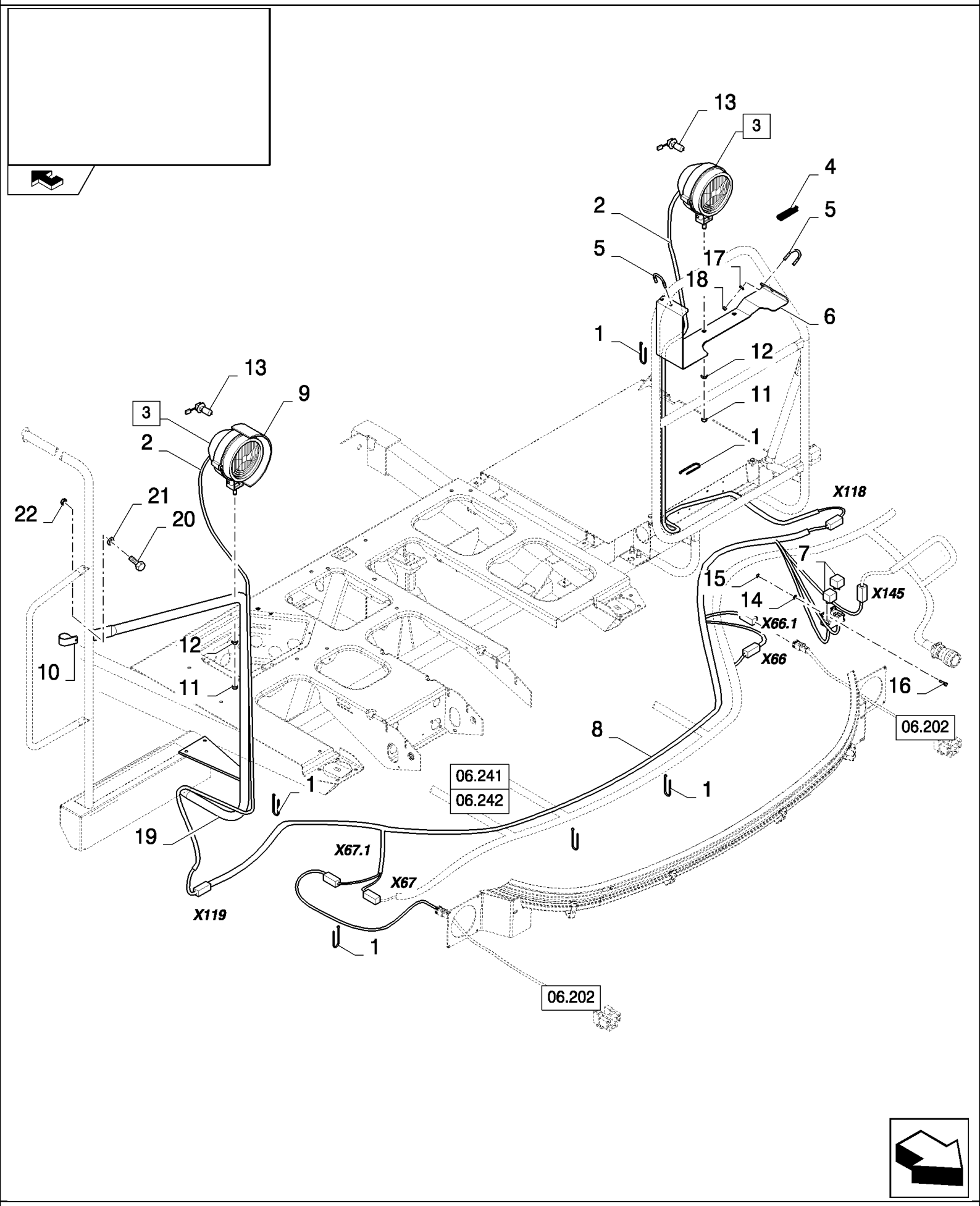

CSX7080 C659 - COMBINE (9/06-8/08)

06.236(01) ADDITIONAL LIGHTS FOR MAIZE HEADER

ссылка	Номер детали	Кол-во	Описание
1	89993154	19	CLAMP,
2	84448631	2	HARNESS, WIRE, , SEE FIGURE 06.564/06.565
3	418863	2	LAMP, (11 to 13)
4	89850033	1	SEAL, L=0.07M
5	84448555	2	U-BOLT,
6	84448518	1	SUPPORT,
7	84000651	2	RELAY,
8	84448868	1	HARNESS, WIRE, , SEE FIGURE 06.567
9	84039151	1	PLATE, COVER,
10	9513271	1	CLAMP,
11	NS	2	NOT SERVICED,
12	NS	2	NOT SERVICED,
13	446592	2	BULB, 12V 60/55W Halogen
14	322356	2	WASHER, 5MM
15	86508813	2	NUT, M5, Cl 8,
16	120098	2	BOLT, Hex, M5 x 20, 8.8, Full Thd,
17	322357	4	WASHER, SPRING, Belleville, M6,
18	9706755	4	NUT, M6, Cl 8,
19	87516453	1	SUPPORT,
20	120104	1	SCREW, Hex, M8 x 20, 8.8,
21	378243	1	WASHER, M8,
22	9628098	1	NUT, LOCK, M8 x 1.25, Cl 10,

06.236(A 01) ADDITIONAL LIGHTS FOR MAIZE HEADER - FOR LATERALE ONLY

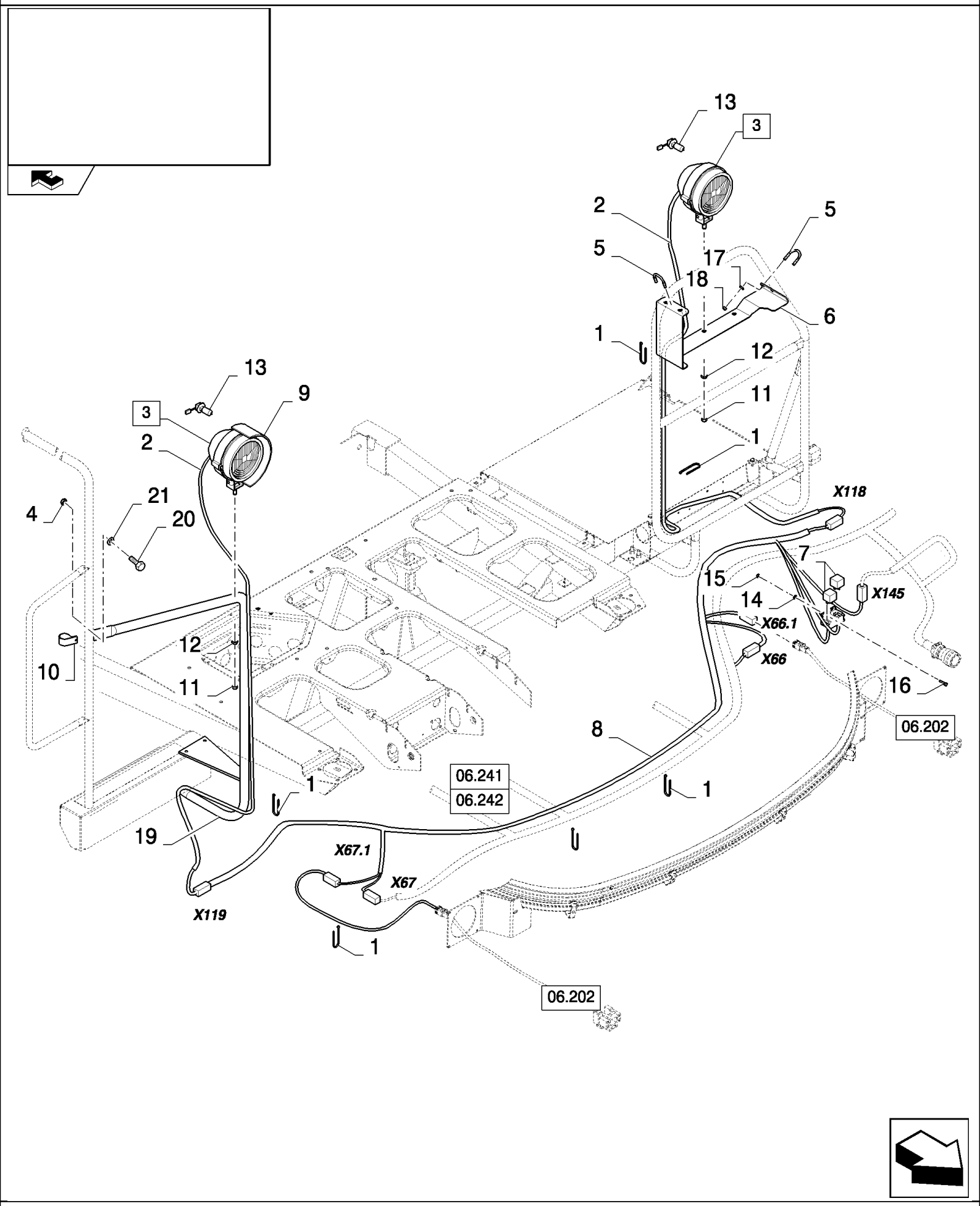

CSX7080 C659 - COMBINE (9/06-8/08)

06.236(A 01) ADDITIONAL LIGHTS FOR MAIZE HEADER - FOR LATERALE ONLY

ссылка	Номер детали	Кол-во	Описание
1	86566990	18	STRAP, CABLE,
2	84448631	2	HARNESS, WIRE, , SEE FIGURE 06.564/06.565
3	418863	2	LAMP, (11 to 13)
4	9628098	1	NUT, LOCK, M8 x 1.25, Cl 10,
6	87715573	1	SUPPORT,
5	84448555	2	U-BOLT,
7	84000651	2	RELAY,
8	84448868	1	HARNESS, WIRE, , SEE FIGURE 06.567
9	84039151	1	PLATE, COVER,
10	9513271	1	CLAMP,
11	NS	2	NOT SERVICED,
12	NS	2	NOT SERVICED,
13	446592	2	BULB, 12V 60/55W Halogen
14	322356	2	WASHER, 5MM
15	86508813	2	NUT, M5, Cl 8,
16	120098	2	BOLT, Hex, M5 x 20, 8.8, Full Thd,
17	322357	4	WASHER, SPRING, Belleville, M6,
18	9706755	4	NUT, M6, Cl 8,
19	87516453	1	SUPPORT,
20	120104	1	SCREW, Hex, M8 x 20, 8.8,
21	378243	1	WASHER, M8,

06.237(A 01) STRAW WALKER DETECTOR

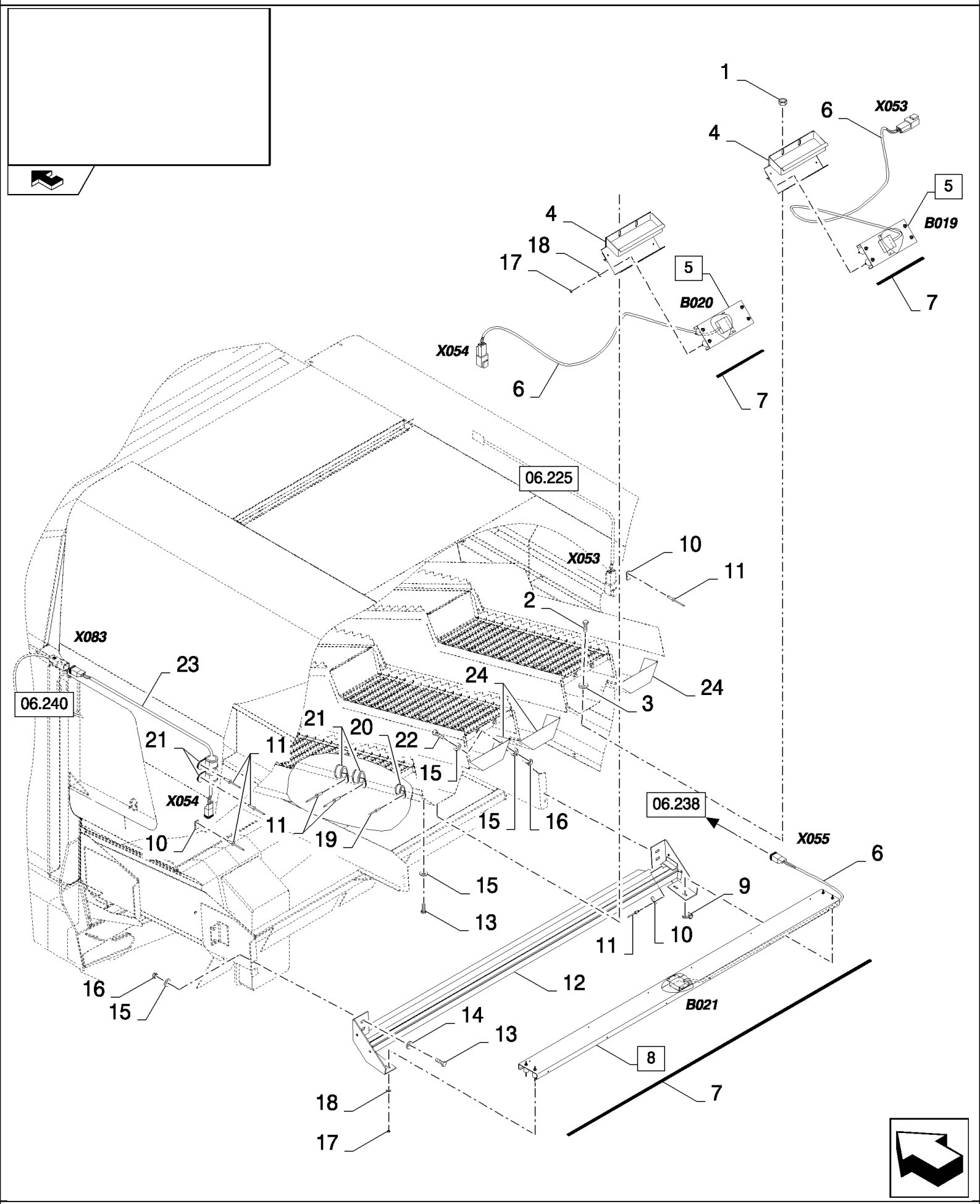

CSX7080 C659 - COMBINE (9/06-8/08)

06.237(A 01) STRAW WALKER DETECTOR

ссылка	Номер детали	Кол-во	Описание
1	100012	6	NUT, M4, Cl 8,
2	86511042	6	SCREW, Cross Pan Hd, M4 x 16,
3	322355	6	WASHER, Belleville, M4,
4	84017737	2	HOLDER,
5	86579531	2	DETECTOR, (6)
6	84000257	3	SENSOR, , SEE FIGURE 06.701
7	80401278	1	SEAL, L=2.622M
8	86579534	1	DETECTOR, (6)
9	272535	1	CLAMP, 1/8", Insul, 1/4" Bolt,
10	84058832	3	CLIP,
11	445394	11	RIVET, Pop, M4.8 x 12.7, RIVET
12	84454862	1	SUPPORT,
13	120104	8	SCREW, Hex, M8 x 20, 8.8,
14	84042926	4	PLATE, COVER,
15	322358	28	WASHER, SPRING, Belleville, M8,
16	9706690	12	NUT, M8, Cl 8,
17	9706755	12	NUT, M6, Cl 8,
18	322357	12	WASHER, SPRING, Belleville, M6,
19	9512290	2	RIVET, RIVET
20	84818442	2	CLAMP,
21	9706748	8	CLAMP, 5/8", Insul, 5/16" Bolt,
22	120103	8	BOLT, Hex, M8 x 16, 8.8,
23	84437262	1	HARNESS, WIRE, , SEE FIGURE 06.522

06.238(01) WIRING HARNESS

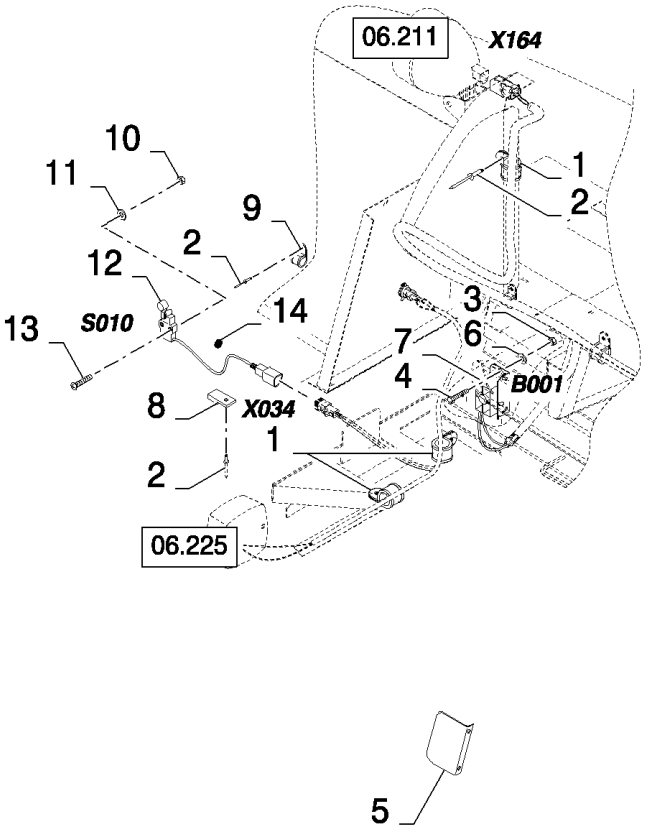

06.238(01) WIRING HARNESS

ссылка	Номер детали	Кол-во	Описание
1	84818443	11	CLAMP,
2	NS	AR	NOT SERVICED, RIVET
3	9706755	3	NUT, M6, Cl 8,
4	120100	3	BOLT, Hex, M6 x 20, 8.8,
5	84443836	1	BRACKET,
6	322357	2	WASHER, SPRING, Belleville, M6,
7	87010223	1	BUZZER,
8	84058832	1	CLIP,
9	9507808	1	CLAMP,
10	86511824	2	SCREW, Cross Pan Hd, M4 x 20,
11	322355	2	WASHER, Belleville, M4,
12	84807307	1	SWITCH, REAR LADDER, SEE FIGURE 06.701
13	100012	2	NUT, M4, Cl 8,
14	89514935	1	SHOCK ABSORBER,

06.238(A 01) STRAW WALKER FRAME, ELECTRICAL COMPONENTS

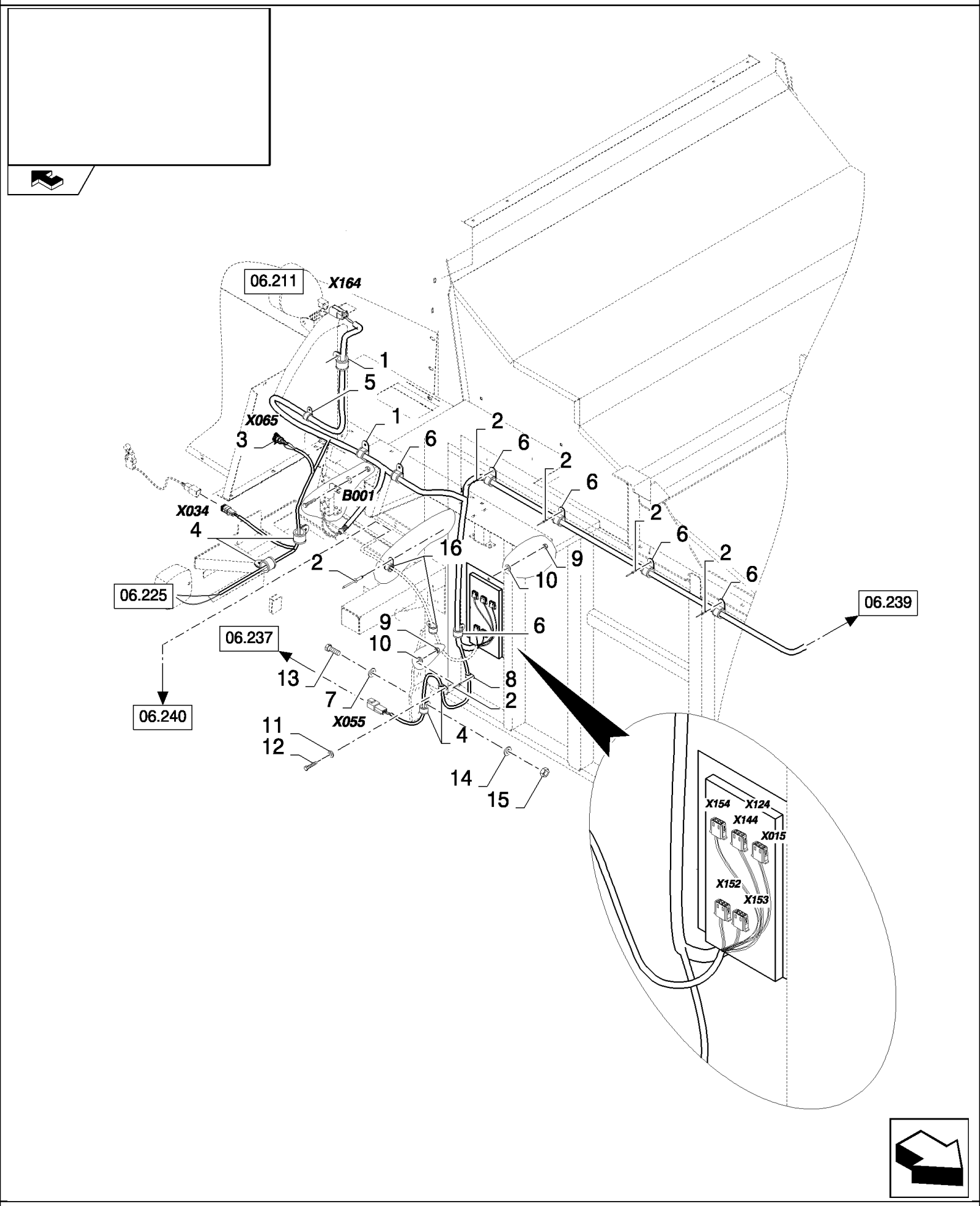

CSX7080 C659 - COMBINE (9/06-8/08)

06.238(A 01) STRAW WALKER FRAME, ELECTRICAL COMPONENTS

ссылка	Номер детали	Кол-во	Описание
1	9706748	4	CLAMP, 5/8", Insul, 5/16" Bolt,
2	9512290	AR	RIVET,
3	374418	1	SOCKET, POWER,
4	9837692	7	CLAMP,
5	84818443	1	CLAMP,
6	84818445	7	CLAMP,
7	140016	2	WASHER, M8 x 16 x 1.6,
8	84818441	2	CLAMP,
9	9706755	5	NUT, M6, Cl 8,
10	412649	5	WASHER, SPRING, Belleville, M6,
11	86588450	2	WASHER, M6,
12	120100	2	BOLT, Hex, M6 x 20, 8.8,
13	120103	2	BOLT, Hex, M8 x 16, 8.8,
14	322358	2	WASHER, SPRING, Belleville, M8,
15	9706690	2	NUT, M8, Cl 8,
16	84818442	11	CLAMP,

06.239(A 01) STRAW WALKER FRAME, ELECTRICAL COMPONENTS

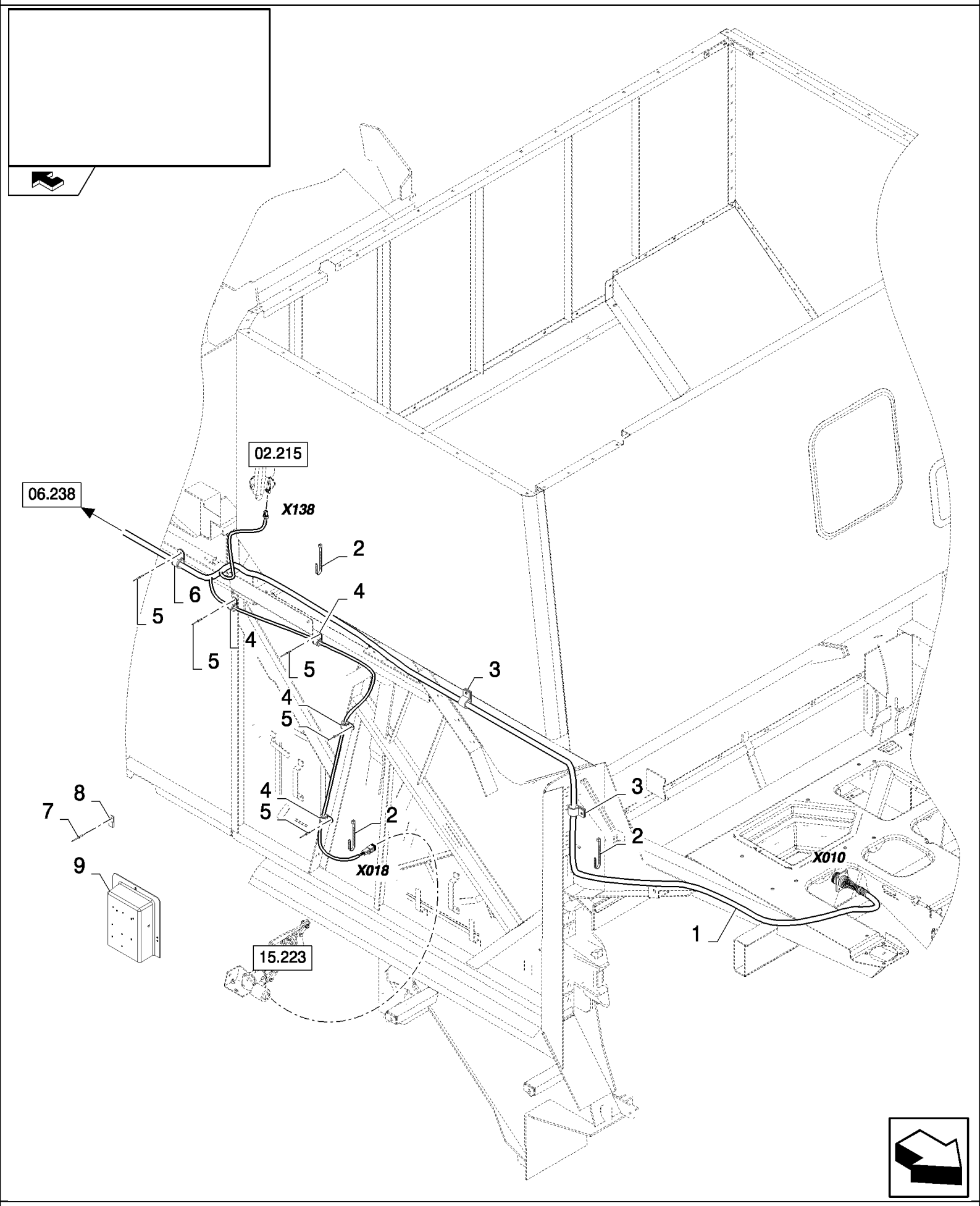

06.239(A 01) STRAW WALKER FRAME, ELECTRICAL COMPONENTS

ссылка	Номер детали	Кол-во	Описание
1	87396443	1	HARNESS, WIRE, (7 to 9), SEE FIGURE 06.582
2	86566990	5	STRAP, CABLE,
3	9827902	4	CLAMP, 1", Insul, 3/8" Bolt,
4	84818442	5	CLAMP,
5	9512290	6	RIVET,
6	84818445	1	CLAMP,
7	445394	3	RIVET, Pop, M4.8 x 12.7,
8	84807267	3	CONNECTOR, WIRE,
9	84320490	1	RELAY,

06.240(A 01) STRAW WALKER FRAME, ELECTRICAL COMPONENTS

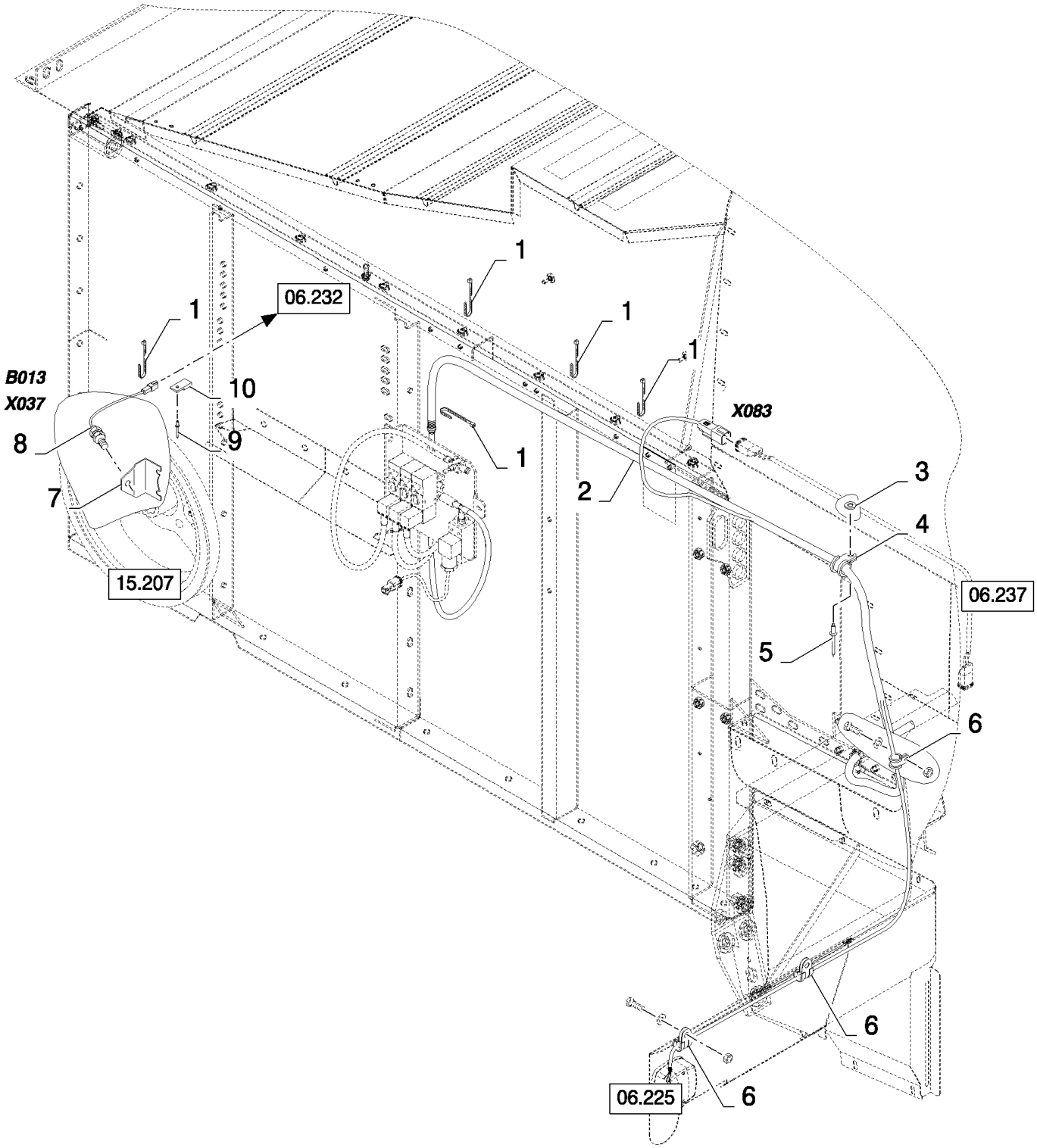

CSX7080 C659 - COMBINE (9/06-8/08)

06.240(A 01) STRAW WALKER FRAME, ELECTRICAL COMPONENTS

ссылка	Номер детали	Кол-во	Описание
1	86566990	2	STRAP, CABLE,
2	87396122	1	HARNESS, WIRE, , SEE FIGURE 06.580
3	322356	2	WASHER, 5MM
4	84818442	2	CLAMP,
5	9512290	2	RIVET,
6	86010402	6	CLAMP, 1/2", Insul, 3/8" Bolt,
7	84334107	1	BRACKET,
8	84058861	1	SENSOR, , SEE FIGURE 06.701
9	445394	1	RIVET, Pop, M4.8 x 12.7,
10	84058832	1	CLIP,

06.241(01) WIRING HARNESS

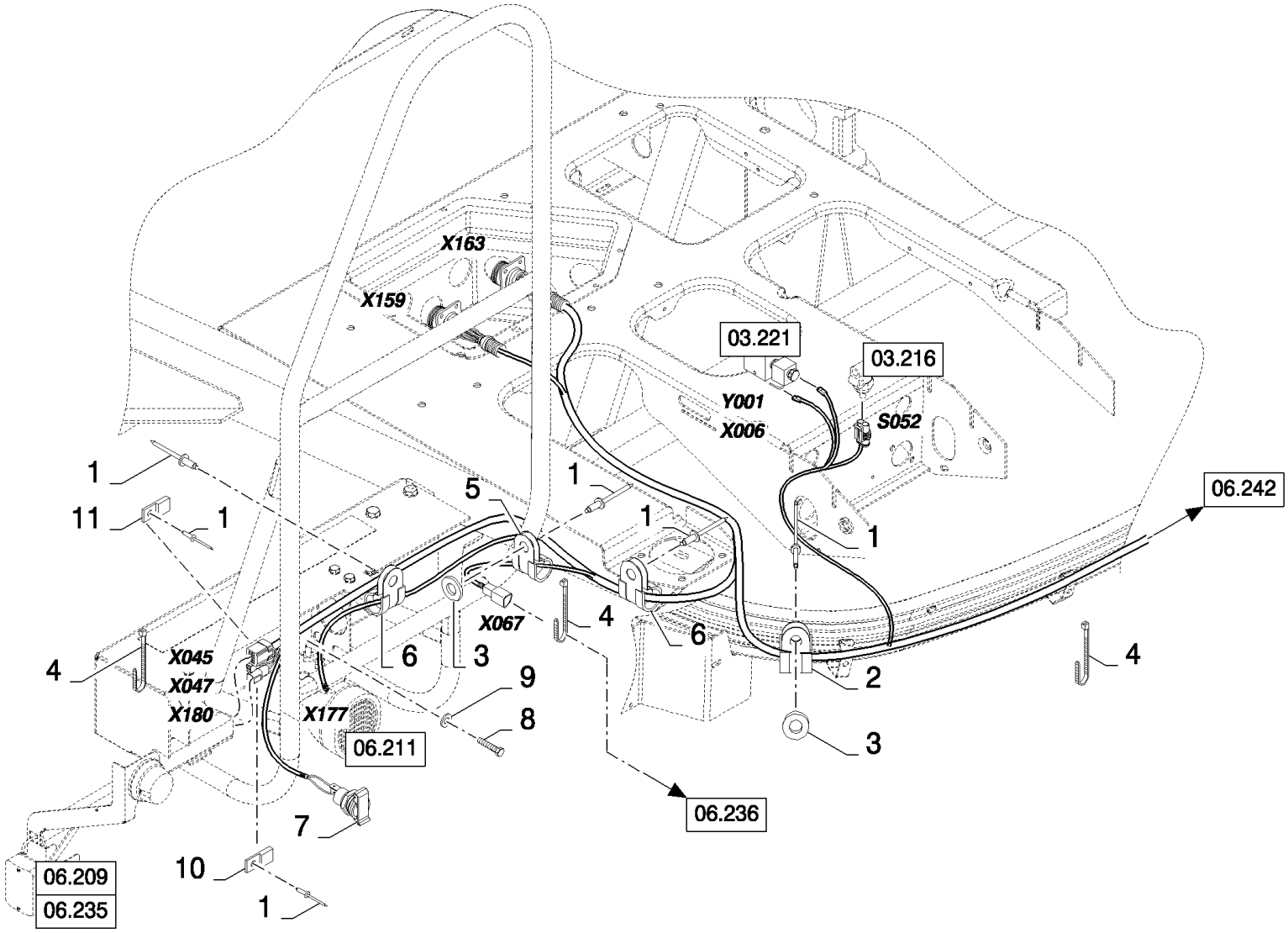

CSX7080 C659 - COMBINE (9/06-8/08)

06.241(01) WIRING HARNESS

ссылка	Номер детали	Кол-во	Описание
1	NS	AR	NOT SERVICED, RIVET
2	86628564	1	CLAMP, 1 1/4", Insul, 3/8" Bolt,
3	322356	2	WASHER, 5MM
4	9993154	8	ELASTIC STRAP,
5	84818444	1	CLAMP,
6	84818443	4	CLAMP,
7	374418	1	SOCKET, POWER,
8	120100	1	BOLT, Hex, M6 x 20, 8.8,
9	322357	1	WASHER, SPRING, Belleville, M6,
10	84058832	1	CLIP,
11	84807267	1	CONNECTOR, WIRE,

06.242(01) WIRING HARNESS

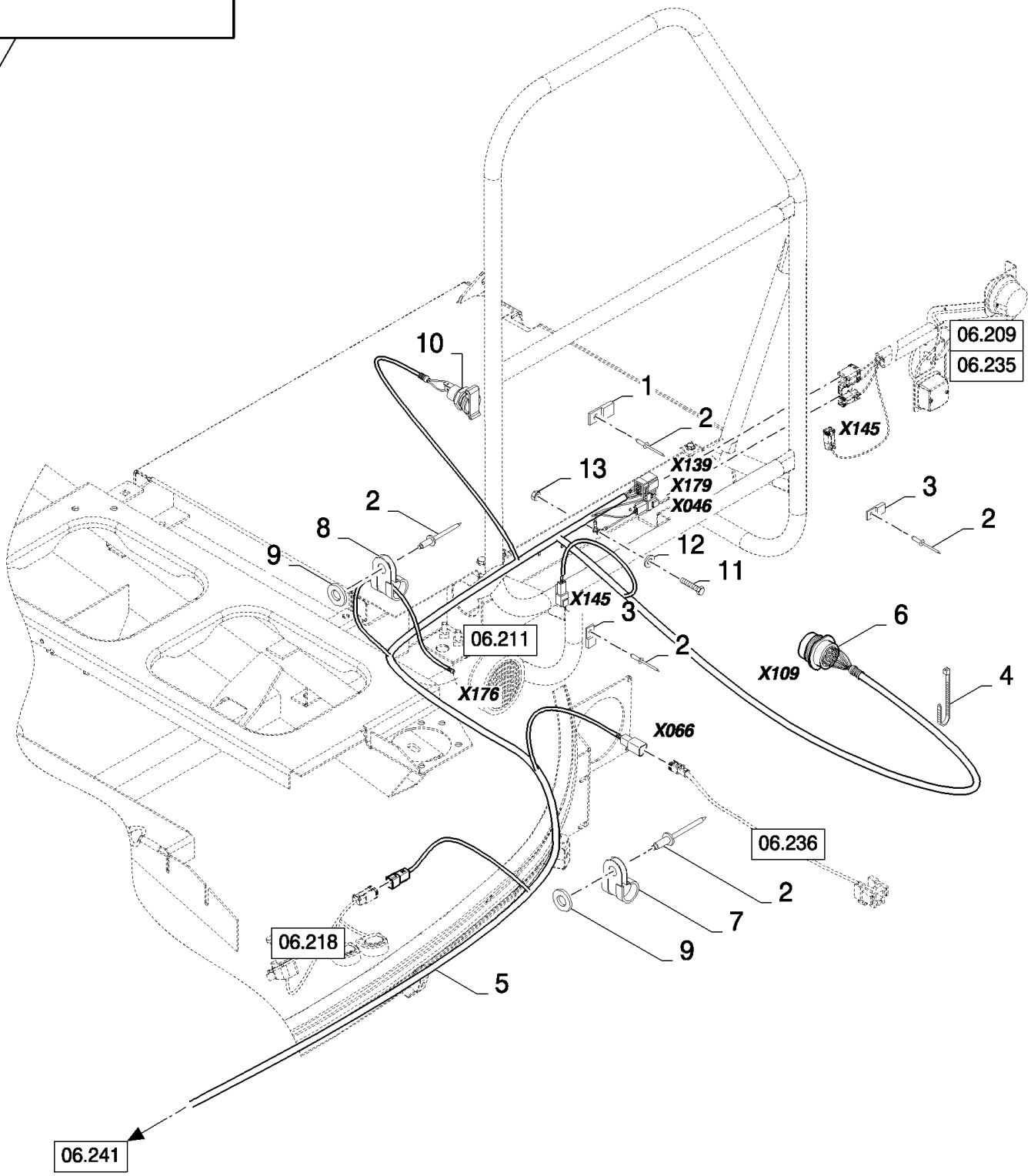

CSX7080 C659 - COMBINE (9/06-8/08)

06.242(01) WIRING HARNESS

ссылка	Номер детали	Кол-во	Описание
1	84807267	1	CONNECTOR, WIRE,
2	NS	AR	NOT SERVICED, RIVET
3	84058832	2	CLIP,
4	9993154	9	ELASTIC STRAP,
5	84435760	1	HARNESS, WIRE, , SEE FIGURE 06.511
6	87105683	1	CAP,
7	84818445	1	CLAMP,
8	84818443	1	CLAMP,
9	322356	2	WASHER, 5MM
10	374418	1	SOCKET, POWER,
11	120100	1	BOLT, Hex, M6 x 20, 8.8,
12	322357	1	WASHER, SPRING, Belleville, M6,
13	9706755	1	NUT, M6, Cl 8,

06.243(01) UNLOADING AUGER - SENSOR

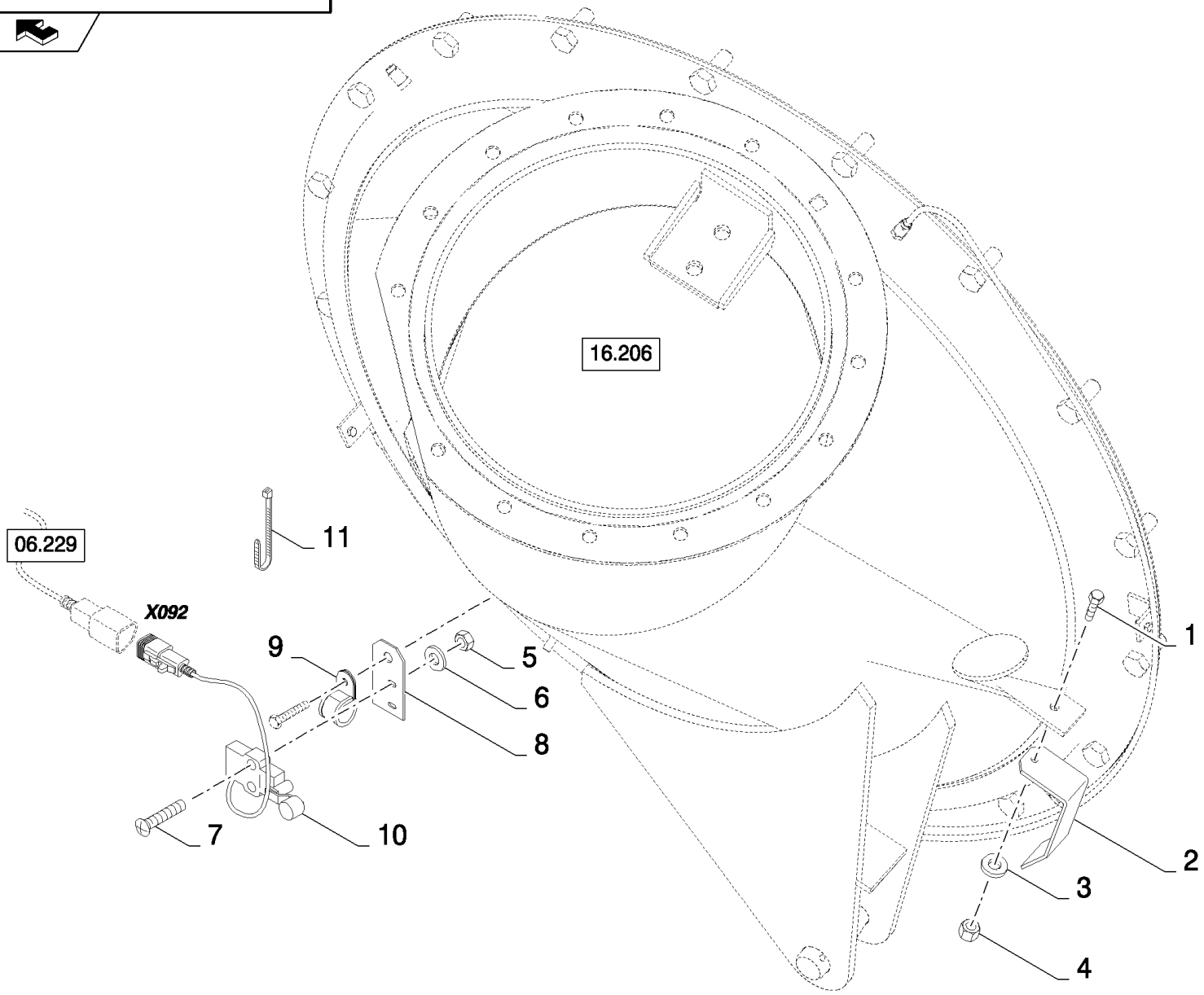

CSX7080 C659 - COMBINE (9/06-8/08)

06.243(01) UNLOADING AUGER - SENSOR

ссылка	Номер детали	Кол-во	Описание
1	120100	1	BOLT, Hex, M6 x 20, 8.8,
2	84439459	1	BRACKET,
3	322357	1	WASHER, SPRING, Belleville, M6,
4	9706755	1	NUT, M6, Cl 8,
5	100012	2	NUT, M4, Cl 8,
6	322355	2	WASHER, Belleville, M4,
7	86511824	2	SCREW, Cross Pan Hd, M4 x 20,
8	84439463	1	BRACKET,
9	675162	1	CLAMP, WIRE, M6.3, Insul, 3/8" Bolt,
10	84807307	1	SWITCH,
11	9993154	1	ELASTIC STRAP,

06.246(01) RETURN SENSORS

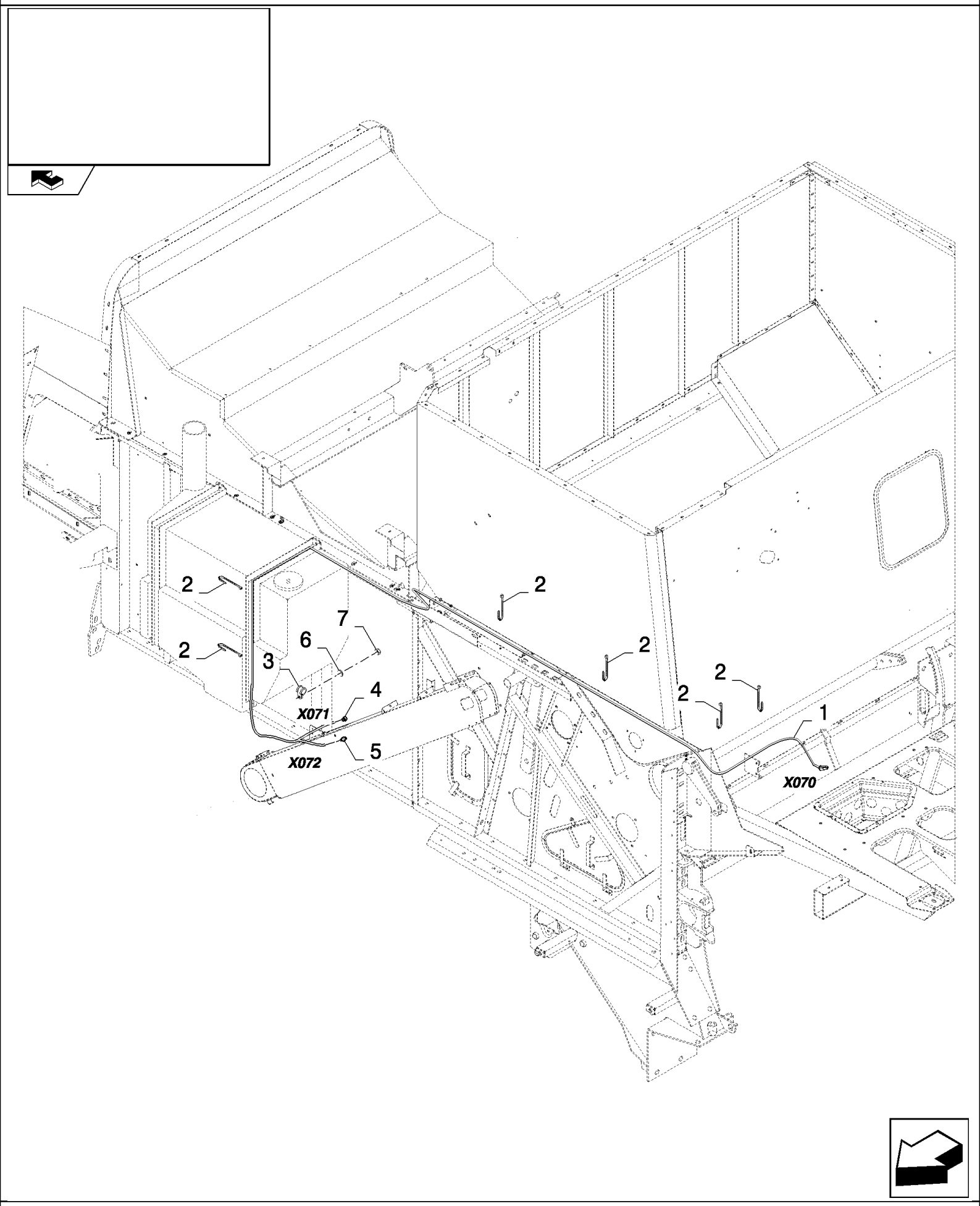

CSX7080 C659 - COMBINE (9/06-8/08)

06.246(01) RETURN SENSORS

ссылка	Номер детали	Кол-во	Описание
1	87377154	1	HARNESS, WIRE, , SEE FIGURE 06.586
2	86566990	17	STRAP, CABLE,
3	86010402	1	CLAMP, 1/2", Insul, 3/8" Bolt,
4	87377156	1	SENSOR,
5	87377161	1	SENSOR,
6	140045	1	WASHER, SPRING, Belleville, M10,
7	100037	1	NUT, M10 x 1.5, Cl 8,

CSX7080 C659 - COMBINE (9/06-8/08)

06.247(01) CAMERA KIT

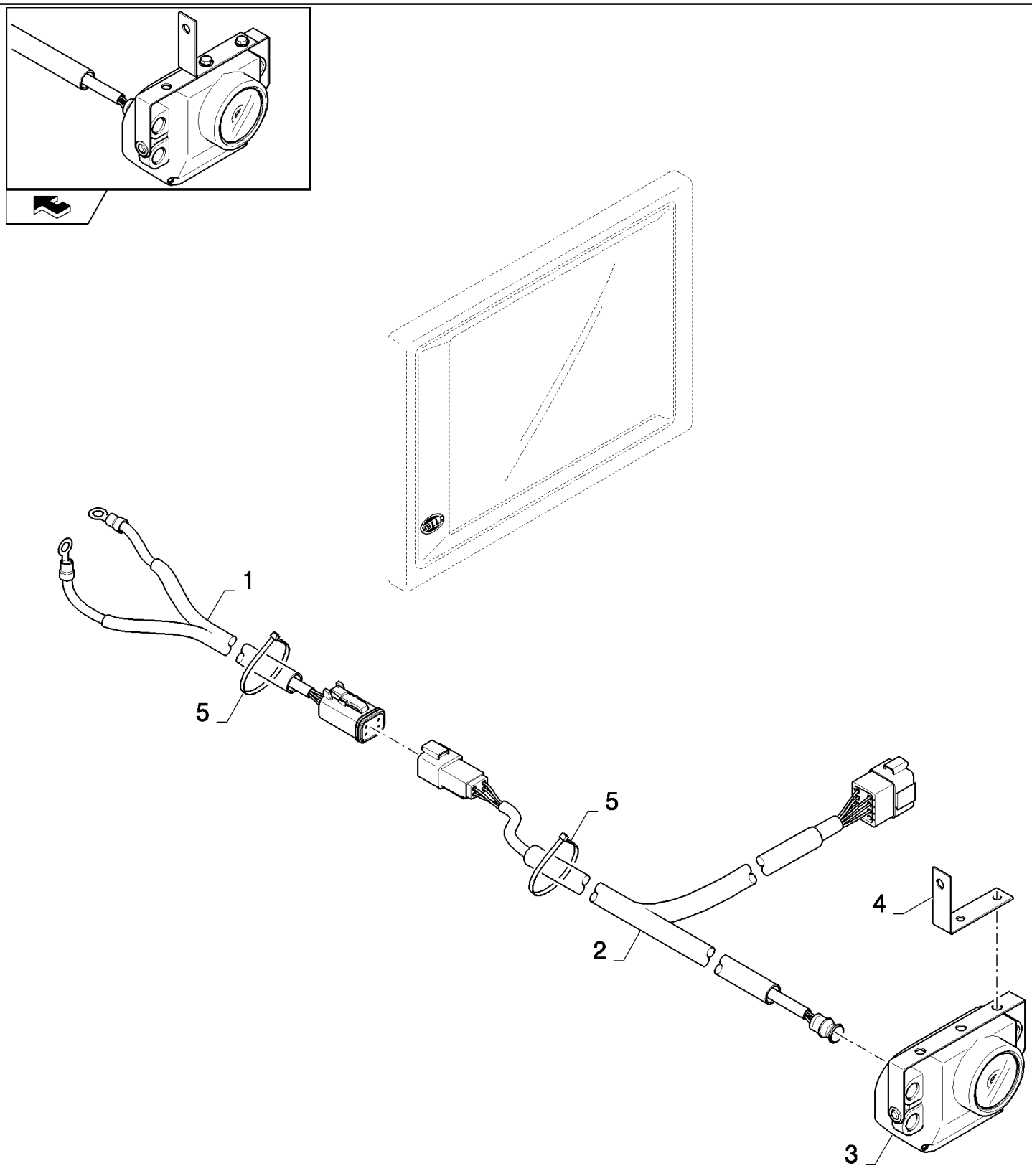

CSX7080 C659 - COMBINE (9/06-8/08)

06.247(01) CAMERA KIT

ссылка	Номер детали	Кол-во	Описание
1	87720161	1	HARNESS, WIRE,
2	87720160	1	HARNESS, WIRE,
3	87720156	1	VIDEO CAMERA,
4	87676867	1	PLATE, MOUNTING,
5	86566989	35	STRAP, CABLE,

06.248(01) ELECTRICITY FOR SELF LEVELLING - FOR LATERALE ONLY

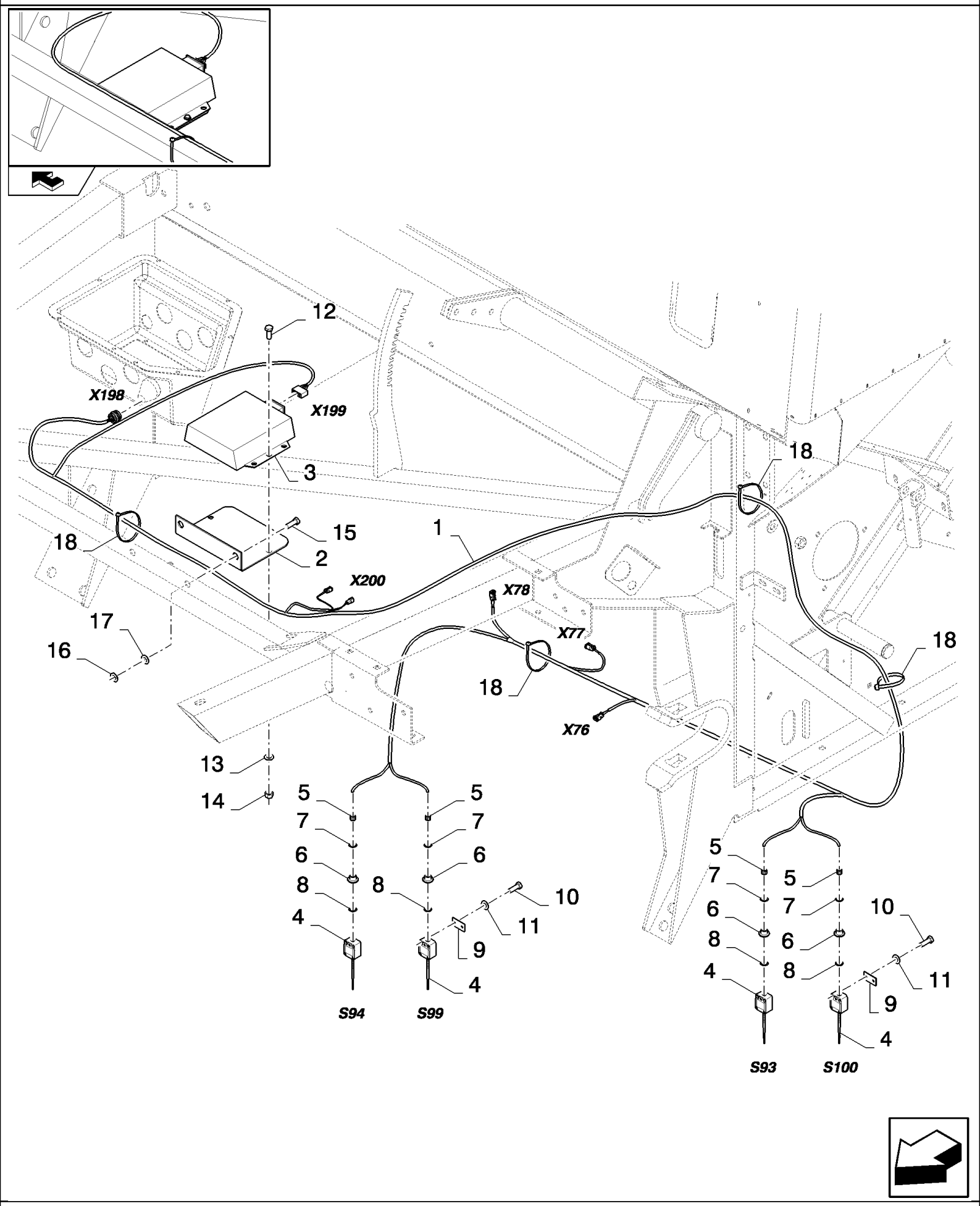

CSX7080 C659 - COMBINE (9/06-8/08)

06.248(01) ELECTRICITY FOR SELF LEVELLING - FOR LATERALE ONLY

ссылка	Номер детали	Кол-во	Описание
1	87597033	1	HARNESS, WIRE,
2	87719605	1	PLATE, MOUNTING,
3	87719602	1	MODULE,
4	84022154	4	SWITCH ASSY,
5	84021923	4	NUT,
6	84031543	4	CONNECTOR, HYD.,
7	84022441	4	RING,
8	84021921	4	ELEMENT, SEALING,
9	84022266	4	PLATE, COVER,
10	86546084	8	SCREW, Cross Pan Hd, M5 x 35,
11	322356	8	WASHER,
12	86511827	2	SCREW, Cross Pan Hd, M5 x 20,
13	140182	2	WASHER, M5 x 18 x 2,
14	43440	2	NUT, LOCK, M5 x .8, Cl 8,
15	120104	2	SCREW, Hex, M8 x 20, 8.8,
16	86624184	2	WASHER, M8 x 16 x 1.6,
17	322358	2	WASHER, SPRING, Belleville, M8,
18	86566990	20	STRAP, CABLE,

06.249(01) YIELD MONITOR

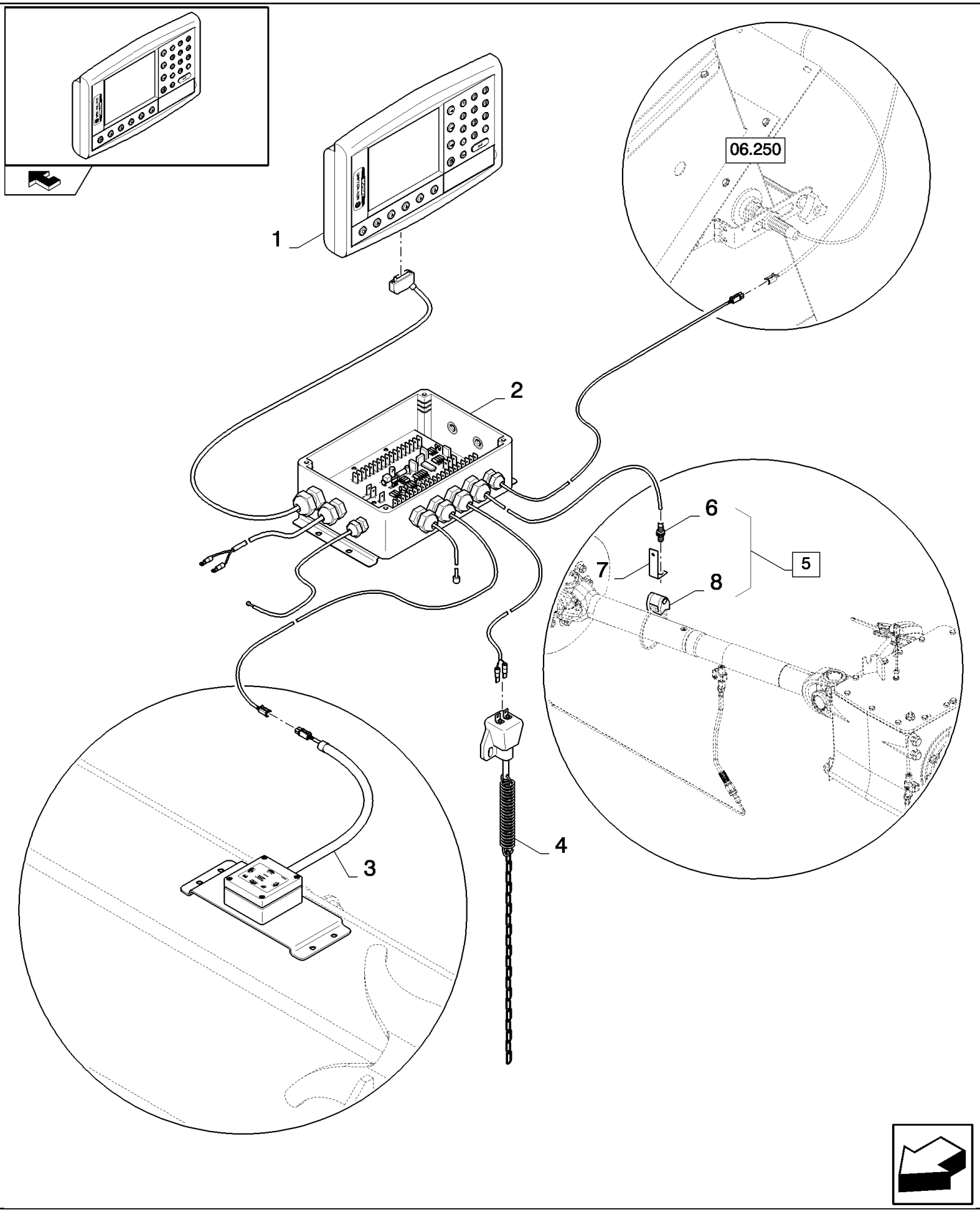

CSX7080 C659 - COMBINE (9/06-8/08)

06.249(01) YIELD MONITOR

ссылка	Номер детали	Кол-во	Описание
1	87623970	1	
2	87623974	1	
3	87623977	1	
4	84400343	1	SWITCH,
5	87623976	1	(6 to 8)
6	NSS	1	NOT SERVICED SEPARATELY,
7	NSS	1	NOT SERVICED SEPARATELY,
8	NSS	1	NOT SERVICED SEPARATELY,

06.250(01) YIELD MONITOR - MOISTURE SENSOR AND OPTICAL YIELD SENSORS

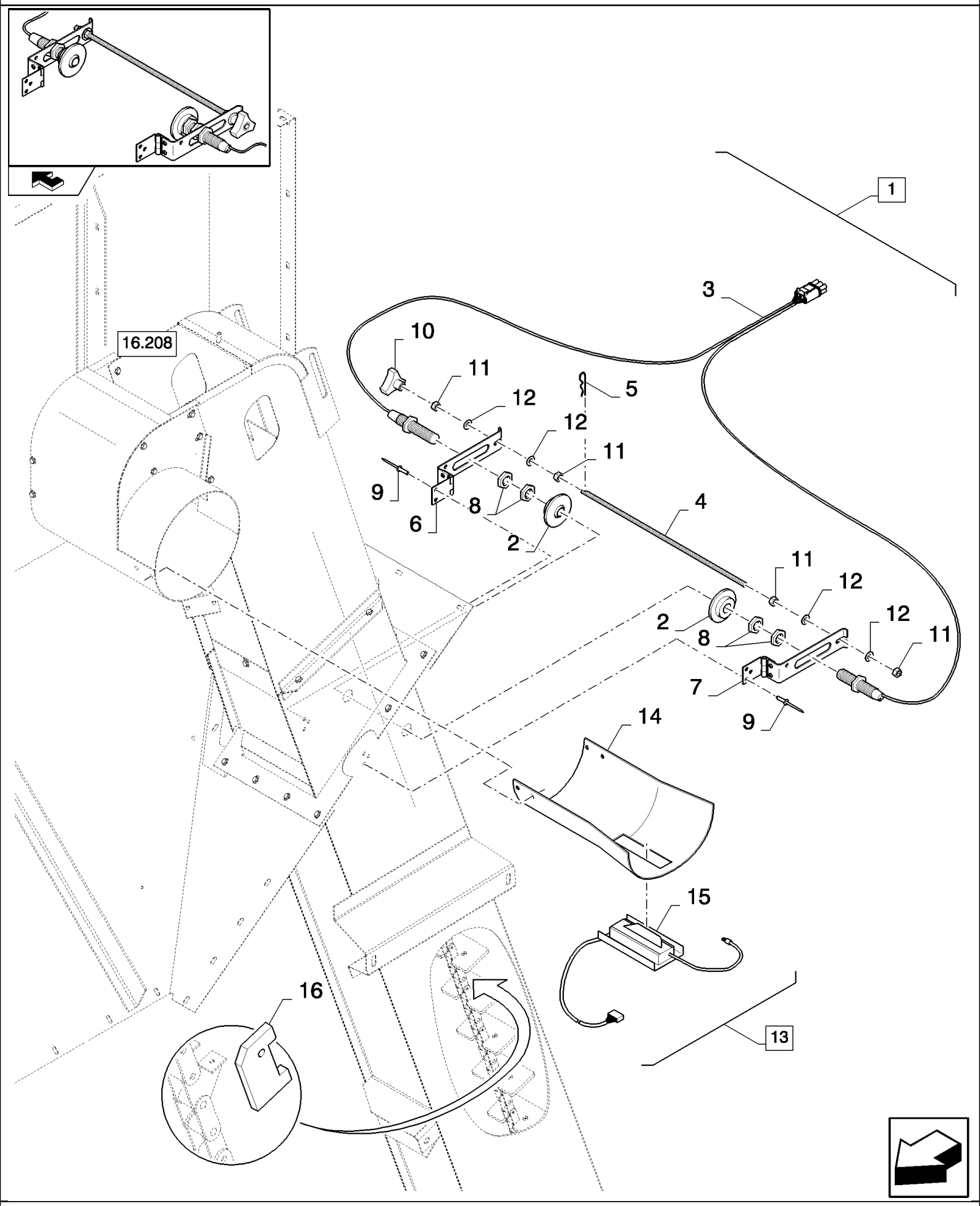

CSX7080 C659 - COMBINE (9/06-8/08)

06.250(01) YIELD MONITOR - MOISTURE SENSOR AND OPTICAL YIELD SENSORS

ссылка	Номер детали	Кол-во	Описание
1	87623971	1	(2 to 12)
2	87623972	2	
3	87623973	1	
4	NSS	1	NOT SERVICED SEPARATELY,
5	NSS	1	NOT SERVICED SEPARATELY,
6	NSS	1	NOT SERVICED SEPARATELY,
7	NSS	1	NOT SERVICED SEPARATELY,
8	NSS	4	NOT SERVICED SEPARATELY,
9	NSS	6	NOT SERVICED SEPARATELY,
10	NSS	1	NOT SERVICED SEPARATELY,
11	NSS	6	NOT SERVICED SEPARATELY,
12	NSS	6	NOT SERVICED SEPARATELY,
13	87626193	1	(14, 15)
14	87626194	1	
15	87626191	1	
16	87623975	1	

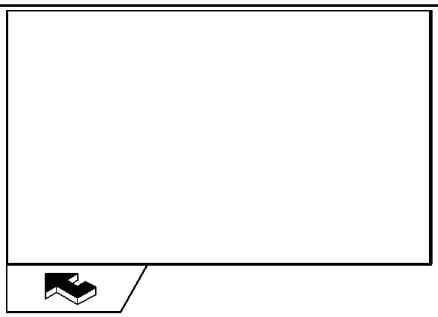

1
2,3

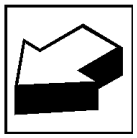

CSX7080 C659 - COMBINE (9/06-8/08)

06.501(01) CABLE HARNESS : 80264517

ссылка	Номер детали	Кол-во	Описание
1	353969		CONNECTOR, ELEC,
2	350674		CONNECTOR, WIRE,
3	430026		TERMINAL,

CSX7080 C659 - COMBINE (9/06-8/08)

06.504(01) CABLE HARNESS : 84400865 - C543

ссылка	Номер детали	Кол-во	Описание

06.511(01) CABLE HARNESS : 84435760

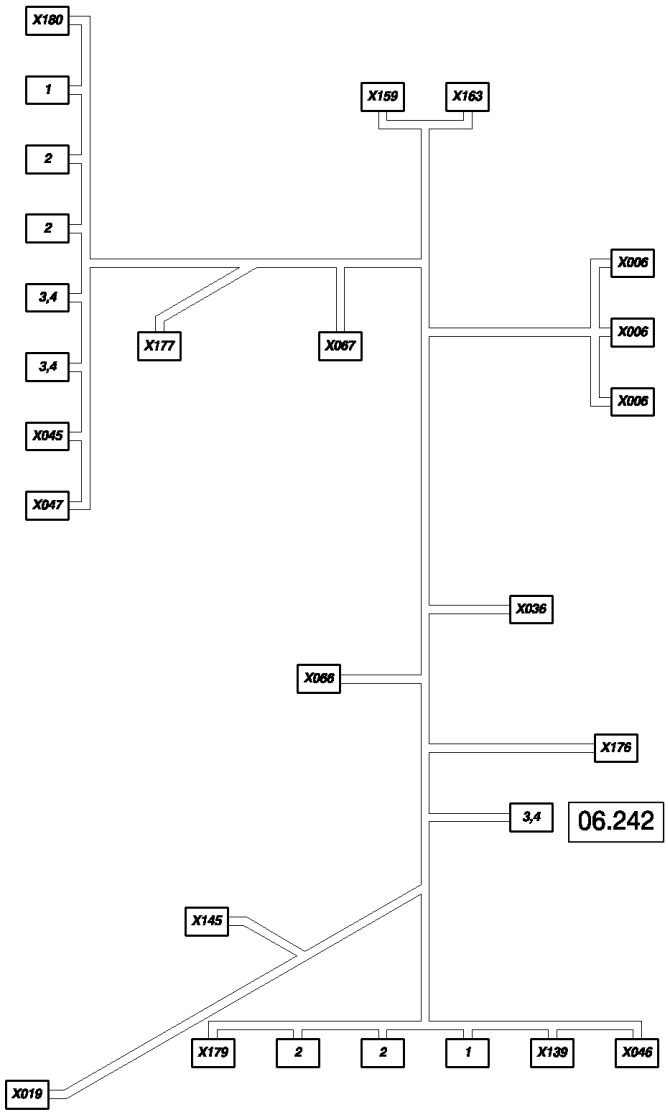

CSX7080 C659 - COMBINE (9/06-8/08)

06.511(01) CABLE HARNESS : 84435760

ссылка	Номер детали	Кол-во	Описание
1	335482		TERMINAL,
2	335483		TERMINAL,
3	441159		CONNECTOR, WIRE,
4	441166		TERMINAL,
S052	441159		CONNECTOR, WIRE, S52
	441166		TERMINAL,
	441159		CONNECTOR, WIRE,
X00686	611284		CONNECTOR, WIRE, X6
	84441696		CONNECTOR, WIRE,
	84100538		CONNECTOR, WIRE,
X01984	320884		CONNECTOR, ELEC, X19
	84068583		PLUG,
	86500036		PIN, ELECT TERMINAL,
X03684	074643		CONNECTOR, WIRE, X36
	86500036		PIN, ELECT TERMINAL,
	84074641		PLUG,
X04584	806311		CONNECTOR, WIRE, X45
	84806208		CONNECTOR, WIRE,
	84068583		PLUG,
	86500036		PIN, ELECT TERMINAL,
X04684	074632		CONNECTOR, WIRE, X46
	86500035		TERMINAL,
	9611173		PLUG,
X04784	074632		CONNECTOR, WIRE, X47
	86500035		TERMINAL,
	86500036		PIN, ELECT TERMINAL,
	9611173		PLUG,
X06684	074635		CONNECTOR, WIRE, X66
	86500036		PIN, ELECT TERMINAL,
	84074639		CONNECTOR, WIRE,
X06784	074635		CONNECTOR, WIRE, X67
	86500036		PIN, ELECT TERMINAL,
	84074639		CONNECTOR, WIRE,
X13984	806311		CONNECTOR, WIRE, X139
	84806208		CONNECTOR, WIRE,
	84068583		PLUG,
	86500036		PIN, ELECT TERMINAL,
	84806312		CONNECTOR, WIRE,
X14584	074630		CONNECTOR, WIRE, X145
	86500035		TERMINAL,
	86500166		PLUG,
X15984	400773		CONNECTOR, WIRE, X159
	84441874		CONNECTOR, WIRE,
	84068583		PLUG,

CSX7080 C659 - COMBINE (9/06-8/08)

06.511(01) CABLE HARNESS : 84435760

ссылка	Номер детали	Кол-во	Описание
	86500035		TERMINAL,
	84074628		CABLE TERMINAL,
	X16384400776		CONNECTOR, WIRE, X163
	84441874		CONNECTOR, WIRE,
	84068583		PLUG,
	86500035		TERMINAL,
	X17684074631		CONNECTOR, WIRE, X176
	86500036		PIN, ELECT TERMINAL,
	84074638		PLUG,
	X17784074631		CONNECTOR, WIRE, X177
	86500036		PIN, ELECT TERMINAL,
	84074638		PLUG,
	X17984074637		CONNECTOR, WIRE, X179
	84068583		PLUG,
	86500036		PIN, ELECT TERMINAL,
	84074640		PLUG,
	X18084074643		CONNECTOR, WIRE, X180
	84068583		PLUG,
	86500036		PIN, ELECT TERMINAL,
	84074641		PLUG,

06.517(01) CABLE HARNESS : 84437176

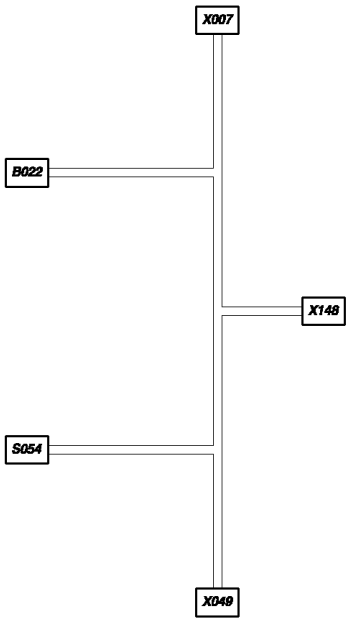

CSX7080 C659 - COMBINE (9/06-8/08)

06.517(01) CABLE HARNESS : 84437176

ссылка	Номер детали	Кол-во	Описание
	B022441159		CONNECTOR, WIRE, B22
	441166		TERMINAL,
	S05484607379		CONNECTOR, WIRE, S54
	334588		TERMINAL,
	X00784400775		CONNECTOR, WIRE, X7
	84441874		CONNECTOR, WIRE,
	84068583		PLUG,
	86500035		TERMINAL,
	X04984439476		CONNECTOR, WIRE, X49
	84439475		CONNECTOR, WIRE,
	X1489509740		CONNECTOR, ELEC, X148
	442243		CONNECTOR, ELEC,

06.518(01) CABLE HARNESS : 84437197 - C543

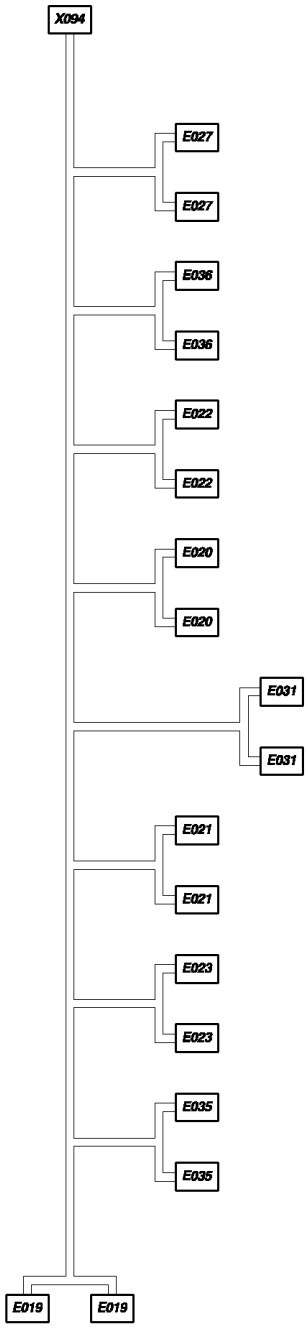

CSX7080 C659 - COMBINE (9/06-8/08)

06.518(01) CABLE HARNESS : 84437197 - C543

ссылка	Номер детали	Кол-во	Описание
E019	441159		CONNECTOR, WIRE, E19
	441166		TERMINAL,
E020	441159		CONNECTOR, WIRE, E20
	441166		TERMINAL,
E021	441159		CONNECTOR, WIRE, E21
	441166		TERMINAL,
E022	441159		CONNECTOR, WIRE, E22
	441166		TERMINAL,
E023	441159		CONNECTOR, WIRE, E23
	441166		TERMINAL,
E027	441159		CONNECTOR, WIRE, E27
	441166		TERMINAL,
E031	441159		CONNECTOR, WIRE, E31
	441166		TERMINAL,
E035	441159		CONNECTOR, WIRE, E35
	441166		TERMINAL,
E036	441159		CONNECTOR, WIRE, E36
	441166		TERMINAL,
X09	484400780		CONNECTOR, WIRE, X94
	84068583		PLUG,
	86500036		PIN, ELECT TERMINAL,

06.522(01) CABLE HARNESS : 84437262

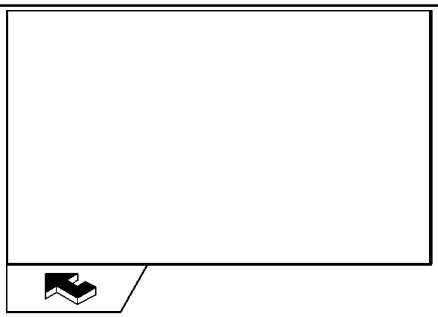

CSX7080 C659 - COMBINE (9/06-8/08)

06.522(01) CABLE HARNESS : 84437262

ссылка	Номер детали	Кол-во	Описание
X05484074631			CONNECTOR, WIRE, X54
	86500036		PIN, ELECT TERMINAL,
	84074638		PLUG,
X08384074631			CONNECTOR, WIRE, X83
	86500036		PIN, ELECT TERMINAL,
	84074638		PLUG,

06.523(01) CABLE HARNESS : 84437263

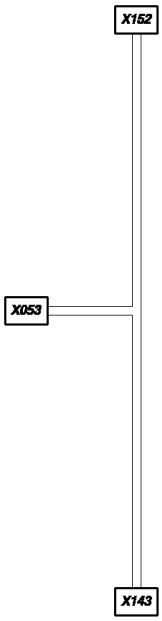

CSX7080 C659 - COMBINE (9/06-8/08)

06.523(01) CABLE HARNESS : 84437263

ссылка	Номер детали	Кол-во	Описание
	X05384074631		CONNECTOR, WIRE, X53
	86500036		PIN, ELECT TERMINAL,
	84074638		PLUG,
	X14384449647		CONNECTOR, WIRE, X143
	86500036		PIN, ELECT TERMINAL,
	84806312		CONNECTOR, WIRE,
	X15284074630		CONNECTOR, WIRE, X152
	86500035		TERMINAL,
	86500036		PIN, ELECT TERMINAL,
	86500166		PLUG,

06.525(01) CABLE HARNESS : 84437294

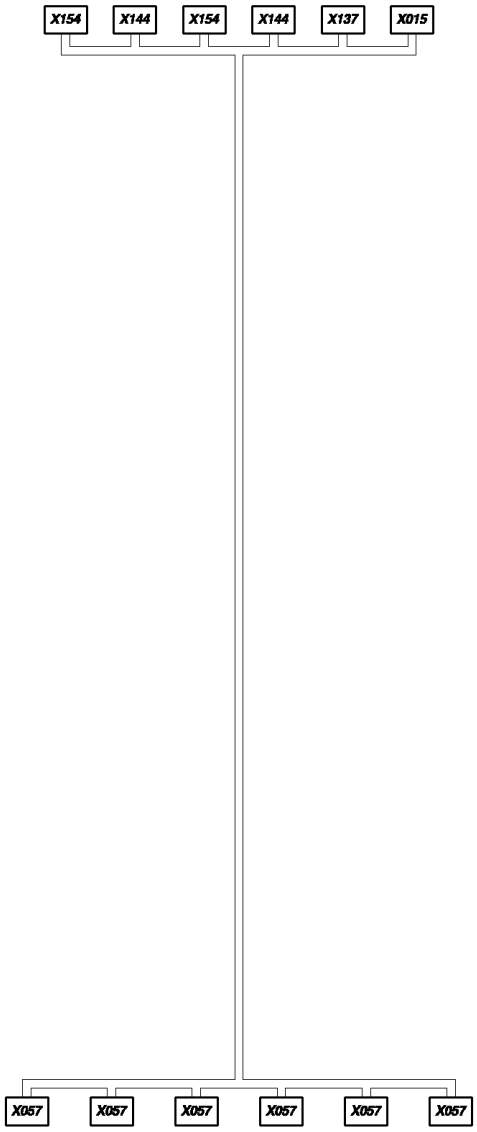

CSX7080 C659 - COMBINE (9/06-8/08)

06.525(01) CABLE HARNESS : 84437294

ссылка	Номер детали	Кол-во	Описание
	X01586500036		PIN, ELECT TERMINAL, X15
	X057426199		TERMINAL, X57
	X13786500036		PIN, ELECT TERMINAL, X137
	X14486500036		PIN, ELECT TERMINAL, X144
	X15486500036		PIN, ELECT TERMINAL, X154

X138
X102

CSX7080 C659 - COMBINE (9/06-8/08)

06.526(01) CABLE HARNESS : 84437301

ссылка	Номер детали	Кол-во	Описание
X10	284806457		CONNECTOR, WIRE, X102
	84806460		CABLE TERMINAL,
	84100538		CONNECTOR, WIRE,
	84806458		CONNECTOR, WIRE,
X13	886500035		TERMINAL, X138

X031
S022

CSX7080 C659 - COMBINE (9/06-8/08)

06.527(01) CABLE HARNESS : 84437313

ссылка	Номер детали	Кол-во	Описание
	S022426199		TERMINAL, S22
	X03184074631		CONNECTOR, WIRE, X31
	86500036		PIN, ELECT TERMINAL,
	84074638		PLUG,

06.528(01) CABLE HARNESS : 84437319

CSX7080 C659 - COMBINE (9/06-8/08)

06.528(01) CABLE HARNESS : 84437319

ссылка	Номер детали	Кол-во	Описание
	S022426199		TERMINAL, S22
	X08584074631		CONNECTOR, WIRE, X85
	86500036		PIN, ELECT TERMINAL,
	84074638		PLUG,

06.529(01) CABLE HARNESS : 84437323

CSX7080 C659 - COMBINE (9/06-8/08)

06.529(01) CABLE HARNESS : 84437323

ссылка	Номер детали	Кол-во	Описание
	X07484074631		CONNECTOR, WIRE, X74
	86500036		PIN, ELECT TERMINAL,
	84074638		PLUG,
	X17884074630		CONNECTOR, WIRE, X178
	86500035		TERMINAL,
	86500166		PLUG,

X073
X165

CSX7080 C659 - COMBINE (9/06-8/08)

06.530(01) CABLE HARNESS : 84437327

ссылка	Номер детали	Кол-во	Описание
X07384074630			CONNECTOR, WIRE, X73
	86500035		TERMINAL,
	86500166		PLUG,
X16584074631			CONNECTOR, WIRE, X165
	86500036		PIN, ELECT TERMINAL,
	84074638		PLUG,

06.532(01) CABLE HARNESS : 84437362

CSX7080 C659 - COMBINE (9/06-8/08)

06.532(01) CABLE HARNESS : 84437362

ссылка	Номер детали	Кол-во	Описание
	E012751307		TERMINAL, E12
	751308		TERMINAL,
	84074632		CONNECTOR, WIRE, X66.1
	86500035		TERMINAL,
	9611173		PLUG,

06.533(01) CABLE HARNESS : 84437362

CSX7080 C659 - COMBINE (9/06-8/08)

06.533(01) CABLE HARNESS : 84437362

ссылка	Номер детали	Кол-во	Описание
	E013751307		TERMINAL, E13
	751308		TERMINAL,
	84074632		CONNECTOR, WIRE, X67.1
	86500035		TERMINAL,
	9611173		PLUG,

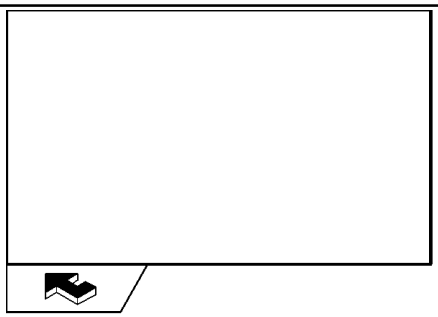

X046
E005

CSX7080 C659 - COMBINE (9/06-8/08)

06.534(01) CABLE HARNESS : 84437371

ссылка	Номер детали	Кол-во	Описание
	E005441166		TERMINAL, E5
	X04684074635		CONNECTOR, WIRE, X46
	86500036		PIN, ELECT TERMINAL,
	84074639		CONNECTOR, WIRE,

X047
E010

CSX7080 C659 - COMBINE (9/06-8/08)

06.535(01) CABLE HARNESS : 84437374

ссылка	Номер детали	Кол-во	Описание
X	04784074635		CONNECTOR, WIRE, X47
	86500036		PIN, ELECT TERMINAL,
	84074639		CONNECTOR, WIRE,
E	010441166		TERMINAL, E10

06.536(01) CABLE HARNESS : 84441116

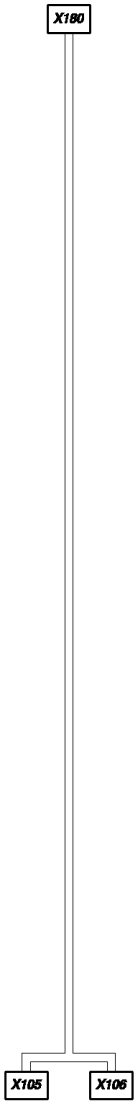

CSX7080 C659 - COMBINE (9/06-8/08)

06.536(01) CABLE HARNESS : 84441116

ссылка	Номер детали	Кол-во	Описание
X105	84074637		CONNECTOR, WIRE, X105
	80447904		CONNECTOR, WIRE,
	86500036		PIN, ELECT TERMINAL,
	84074640		PLUG,
X106	84074635		CONNECTOR, WIRE, X106
	86500036		PIN, ELECT TERMINAL,
	84074639		CONNECTOR, WIRE,
X180	84806918		CONNECTOR, WIRE, X180
	84068583		PLUG,
	86500035		TERMINAL,
	84806919		PLUG,

X179
X104

CSX7080 C659 - COMBINE (9/06-8/08)

06.537(01) CABLE HARNESS : 84441135

ссылка	Номер детали	Кол-во	Описание
X10	484074637		CONNECTOR, WIRE, X104
	86500036		PIN, ELECT TERMINAL,
	84074640		PLUG,
X17	984074632		CONNECTOR, WIRE, X179
	86500035		TERMINAL,
	9611173		PLUG,

06.538(01) CABLE HARNESS : 84441145

CSX7080 C659 - COMBINE (9/06-8/08)

06.538(01) CABLE HARNESS : 84441145

ссылка	Номер детали	Кол-во	Описание
X10	484074636		CONNECTOR, WIRE, X104
	86500035		TERMINAL,
	9861376		CONNECTOR, WIRE,

06.539(01) CABLE HARNESS : 84441145

CSX7080 C659 - COMBINE (9/06-8/08)

06.539(01) CABLE HARNESS : 84441145

ссылка	Номер детали	Кол-во	Описание
X10584074636			CONNECTOR, WIRE, X105
	86500035		TERMINAL,
	9861376		CONNECTOR, WIRE,

06.540(01) CABLE HARNESS : 84441356

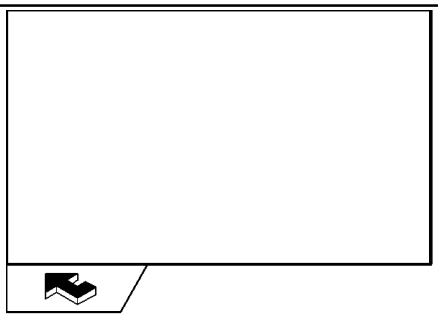

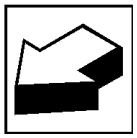

CSX7080 C659 - COMBINE (9/06-8/08)

06.540(01) CABLE HARNESS : 84441356

ссылка	Номер детали	Кол-во	Описание
S035441166			TERMINAL, S35
X04184074630			CONNECTOR, WIRE, X41
	86500035		TERMINAL,
	86500166		PLUG,

06.544(01) CABLE HARNESS : 84441436

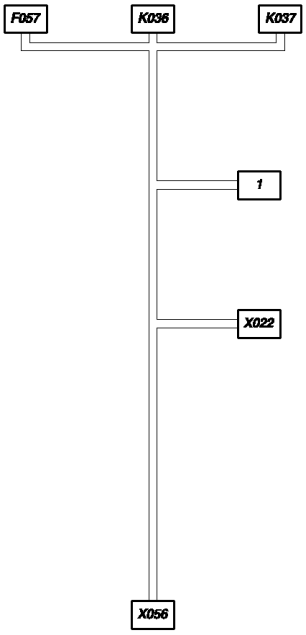

CSX7080 C659 - COMBINE (9/06-8/08)

06.544(01) CABLE HARNESS : 84441436

ссылка	Номер детали	Кол-во	Описание
1	335481		TERMINAL,
F0579811772			FUSE HOLDER, F57
	84100299		FUSE,
	9813989		TERMINAL,
	334787		CABLE TERMINAL,
K036439588			SUPPORT, K36
	334594		TERMINAL,
	334588		TERMINAL,
K037439588			SUPPORT, K37
	334594		TERMINAL,
	334588		TERMINAL,
X02284074636			CONNECTOR, WIRE, X22
	86500035		TERMINAL,
	9861376		CONNECTOR, WIRE,
X056916791			CONNECTOR, WIRE, X56
	445522		TERMINAL,
	9513123		TERMINAL,

06.548(01) CABLE HARNESS : 84441663

CSX7080 C659 - COMBINE (9/06-8/08)

06.548(01) CABLE HARNESS : 84441663

ссылка	Номер детали	Кол-во	Описание
	S022441159		CONNECTOR, WIRE, S22
	441166		TERMINAL,
	X08584074630		CONNECTOR, WIRE, X85
	86500035		TERMINAL,
	86500166		PLUG,

06.549(01) CABLE HARNESS : 84444502

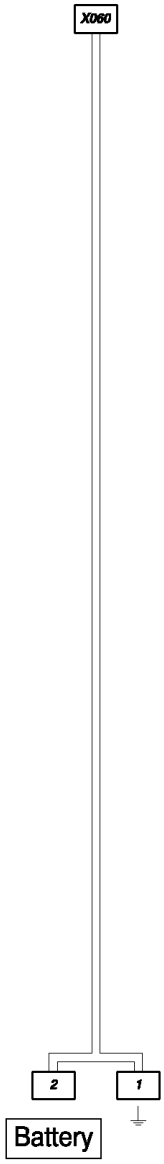

CSX7080 C659 - COMBINE (9/06-8/08)

06.549(01) CABLE HARNESS : 84444502

ссылка	Номер детали	Кол-во	Описание
1	80444852		TERMINAL,
2	455780		TERMINAL,
X06	084814774		CONNECTOR, WIRE, X60
	84814863		CONNECTOR, WIRE,
	84814866		CONNECTOR, WIRE,
	84814865		CABLE TERMINAL,

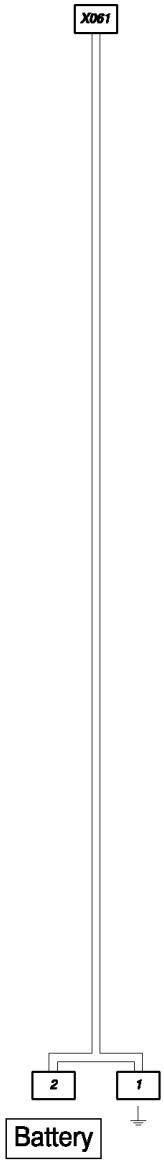
X061
2
1
Battery

CSX7080 C659 - COMBINE (9/06-8/08)

06.550(01) CABLE HARNESS : 84444502

ссылка	Номер детали	Кол-во	Описание
1	80444852		TERMINAL,
2	455780		TERMINAL,
X06	184814774		CONNECTOR, WIRE, X61
	84814863		CONNECTOR, WIRE,
	84814866		CONNECTOR, WIRE,
	84814865		CABLE TERMINAL,

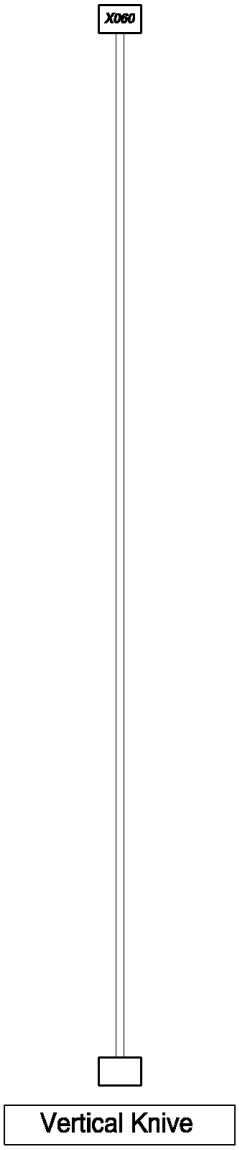
X060
Vertical Knive

CSX7080 C659 - COMBINE (9/06-8/08)

06.551(01) CABLE HARNESS : 84444503

ссылка	Номер детали	Кол-во	Описание
X06	084814773		CONNECTOR, WIRE, X60
	84814863		CONNECTOR, WIRE,
	84814866		CONNECTOR, WIRE,
	84814864		CABLE TERMINAL,

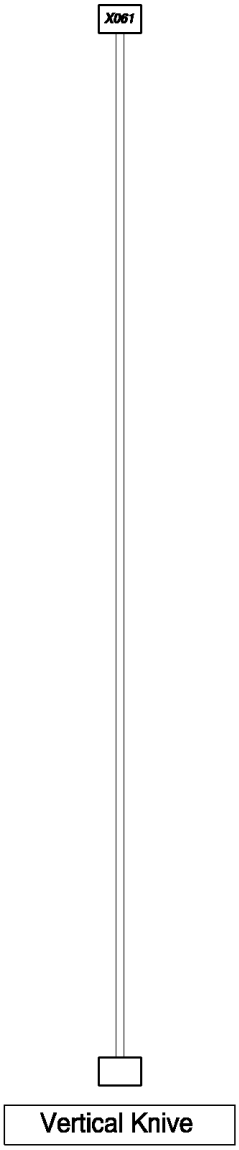
X061
Vertical Knive

CSX7080 C659 - COMBINE (9/06-8/08)

06.552(01) CABLE HARNESS : 84444503

ссылка	Номер детали	Кол-во	Описание
X06184814773			CONNECTOR, WIRE, X61
	84814863		CONNECTOR, WIRE,
	84814866		CONNECTOR, WIRE,
	84814864		CABLE TERMINAL,

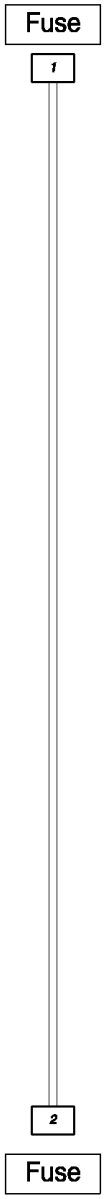
Fuse
1
2
Fuse

CSX7080 C659 - COMBINE (9/06-8/08)

06.553(01) CABLE HARNESS : 84444504

ссылка	Номер детали	Кол-во	Описание
1	455780		TERMINAL,
2	80444853		CABLE TERMINAL,

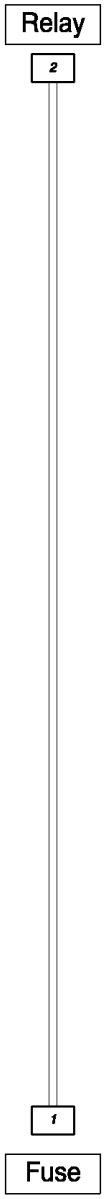
Relay
2
1
Fuse

CSX7080 C659 - COMBINE (9/06-8/08)

06.554(01) CABLE HARNESS : 84444505

ссылка	Номер детали	Кол-во	Описание
1	455780		TERMINAL,
2	80444853		CABLE TERMINAL,

06.555(01) CABLE HARNESS : 84444962

CSX7080 C659 - COMBINE (9/06-8/08)

06.555(01) CABLE HARNESS : 84444962

ссылка	Номер детали	Кол-во	Описание
	X03084074631		CONNECTOR, WIRE, X30
	86500036		PIN, ELECT TERMINAL,
	84074638		PLUG,
	X09784074631		CONNECTOR, WIRE, X97
	86500036		PIN, ELECT TERMINAL,
	84074638		PLUG,
	X09884074637		CONNECTOR, WIRE, X98
	86500036		PIN, ELECT TERMINAL,
	84074640		PLUG,

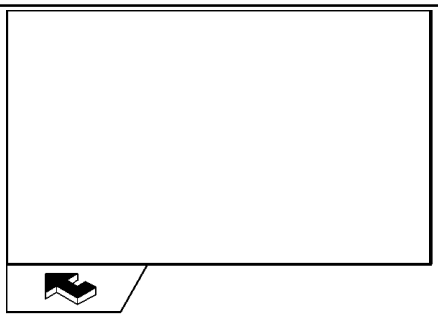

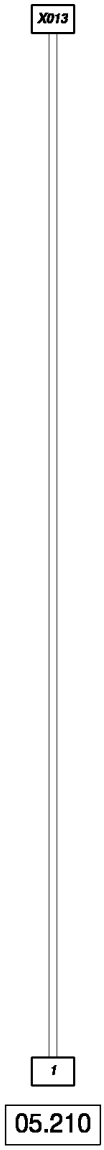
X013
1
05.210

CSX7080 C659 - COMBINE (9/06-8/08)

06.556(01) CABLE HARNESS : 84446931

ссылка	Номер детали	Кол-во	Описание
1	335316		TERMINAL,
X01	384074630		CONNECTOR, WIRE, X13
	84068583		PLUG,
	86500035		TERMINAL,
	86500166		PLUG,

06.559(01) CABLE HARNESS : 84447791

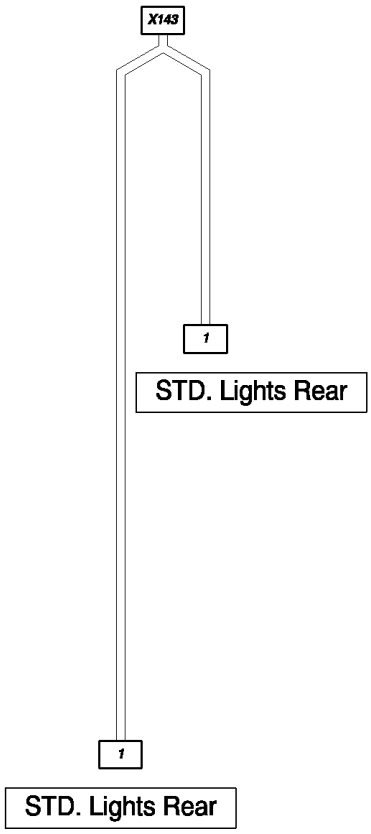

CSX7080 C659 - COMBINE (9/06-8/08)

06.559(01) CABLE HARNESS : 84447791

ссылка	Номер детали	Кол-во	Описание
1	430026		TERMINAL,
X14	384806918		CONNECTOR, WIRE, X143
	86500035		TERMINAL,
	84806919		PLUG,

06.560(01) CABLE HARNESS : 84448032

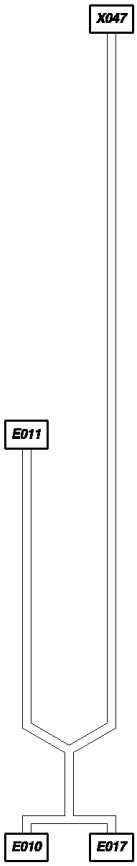

CSX7080 C659 - COMBINE (9/06-8/08)

06.560(01) CABLE HARNESS : 84448032

ссылка	Номер детали	Кол-во	Описание
	E005441167		TERMINAL, E5
	E006334787		CABLE TERMINAL, E6
	426199		TERMINAL,
	E018441166		TERMINAL, E18
	441167		TERMINAL,
	X04784074635		CONNECTOR, WIRE, X47
	86500036		PIN, ELECT TERMINAL,
	84074639		CONNECTOR, WIRE,

06.561(01) CABLE HARNESS : 84448033

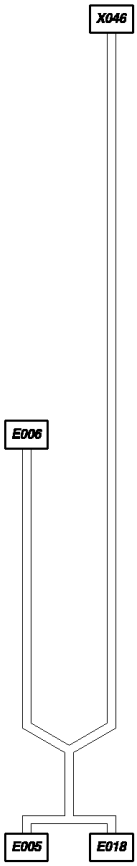

CSX7080 C659 - COMBINE (9/06-8/08)

06.561(01) CABLE HARNESS : 84448033

ссылка	Номер детали	Кол-во	Описание
	E010441167		TERMINAL, E10
	E011334787		CABLE TERMINAL, E11
	426199		TERMINAL,
	E017441166		TERMINAL, E17
	441167		TERMINAL,
	X04684074635		CONNECTOR, WIRE, X46
	86500036		PIN, ELECT TERMINAL,
	84074639		CONNECTOR, WIRE,

06.562(01) CABLE HARNESS : 84448037

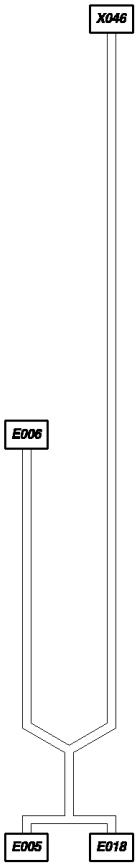

CSX7080 C659 - COMBINE (9/06-8/08)

06.562(01) CABLE HARNESS : 84448037

ссылка	Номер детали	Кол-во	Описание
	E005441167		TERMINAL, E5
	E006441166		TERMINAL, E6
	E018441166		TERMINAL, E18
	441167		TERMINAL,
	X04684074635		CONNECTOR, WIRE, X46
	86500036		PIN, ELECT TERMINAL,

06.563(01) CABLE HARNESS : 84448038

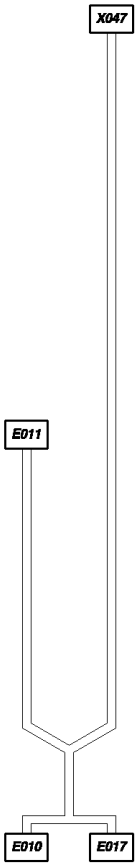

CSX7080 C659 - COMBINE (9/06-8/08)

06.563(01) CABLE HARNESS : 84448038

ссылка	Номер детали	Кол-во	Описание
	E010441167		TERMINAL, E10
	E011441166		TERMINAL, E11
	E017441166		TERMINAL, E17
	441167		TERMINAL,
	X04784074635		CONNECTOR, WIRE, X47
	86500036		PIN, ELECT TERMINAL,
	84074639		CONNECTOR, WIRE,

06.564(01) CABLE HARNESS : 84448631

CSX7080 C659 - COMBINE (9/06-8/08)

06.564(01) CABLE HARNESS : 84448631

ссылка	Номер детали	Кол-во	Описание
1	426199		TERMINAL,
X1	1884074632		CONNECTOR, WIRE, X118
	86500035		TERMINAL,
	9611173		PLUG,

X119
1

CSX7080 C659 - COMBINE (9/06-8/08)

06.565(01) CABLE HARNESS : 84448631

ссылка	Номер детали	Кол-во	Описание
1	426199		TERMINAL,
X11	984074632		CONNECTOR, WIRE, X119
	86500035		TERMINAL,
	9611173		PLUG,

06.567(01) CABLE HARNESS : 84448868

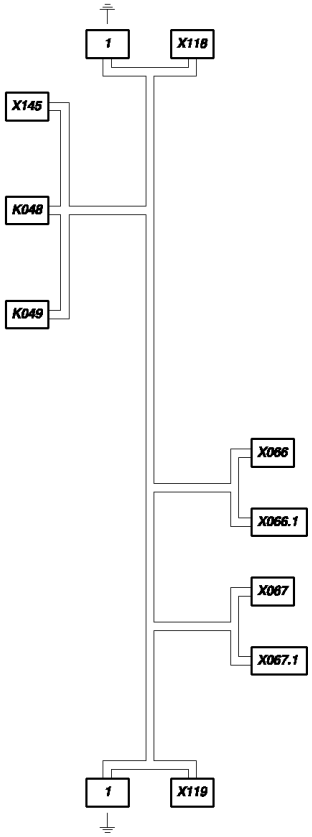

CSX7080 C659 - COMBINE (9/06-8/08)

06.567(01) CABLE HARNESS : 84448868

ссылка	Номер детали	Кол-во	Описание
1	335482		TERMINAL,
K048	439588		SUPPORT, K48
	334588		TERMINAL,
	334594		TERMINAL,
K049	439588		SUPPORT, K49
	334588		TERMINAL,
	334594		TERMINAL,
X06	684074632		CONNECTOR, WIRE, X66
	86500035		TERMINAL,
	9611173		PLUG,
	84074635		CONNECTOR, WIRE, X66.1
	86500036		PIN, ELECT TERMINAL,
	84074639		CONNECTOR, WIRE,
X067	84074632		CONNECTOR, WIRE, X67
	84068583		PLUG,
	86500035		TERMINAL,
	9611173		PLUG,
	84074635		CONNECTOR, WIRE, X67.1
	86500036		PIN, ELECT TERMINAL,
	84074639		CONNECTOR, WIRE,
X118	84074635		CONNECTOR, WIRE, X118
	86500036		PIN, ELECT TERMINAL,
	84074639		CONNECTOR, WIRE,
X119	84074635		CONNECTOR, WIRE, X119
	86500036		PIN, ELECT TERMINAL,
	84074639		CONNECTOR, WIRE,
X145	84074631		CONNECTOR, WIRE, X145
	86500036		PIN, ELECT TERMINAL,
	84074638		PLUG,

06.571(01) CABLE HARNESS : 84449919

CSX7080 C659 - COMBINE (9/06-8/08)

06.571(01) CABLE HARNESS : 84449919

ссылка	Номер детали	Кол-во	Описание
	S036441166		TERMINAL, S36
	X04284074631		CONNECTOR, WIRE, X42
	86500036		PIN, ELECT TERMINAL,
	84074638		PLUG,

06.573(01) CABLE HARNESS : 84452029

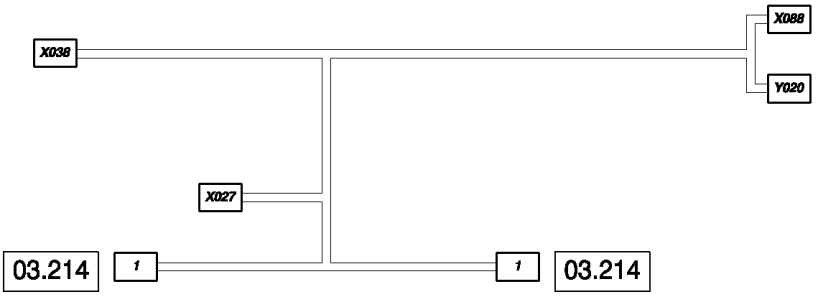

CSX7080 C659 - COMBINE (9/06-8/08)

06.573(01) CABLE HARNESS : 84452029

ссылка	Номер детали	Кол-во	Описание
1	84004134		TERMINAL,
X02784074631			CONNECTOR, WIRE, X27
	86500036		PIN, ELECT TERMINAL,
	84074638		PLUG,
X03884806918			CONNECTOR, WIRE, X38
	86500035		TERMINAL,
	84806919		PLUG,
X08884078681			CONNECTOR, WIRE, X88
	84078682		TERMINAL,
Y02084019407			CONNECTOR, HYD., Y20
	426199		TERMINAL,

06.575(01) CABLE HARNESS : 87370061

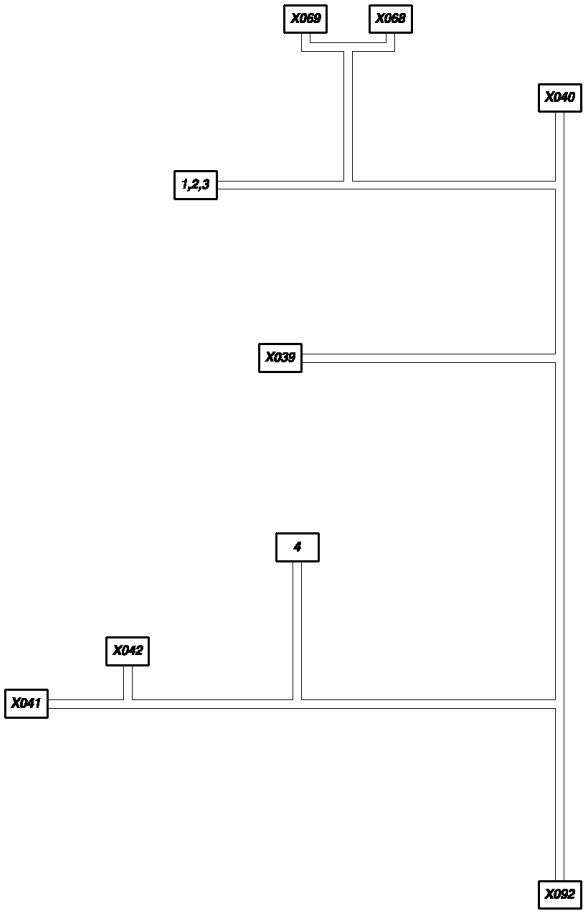

CSX7080 C659 - COMBINE (9/06-8/08)

06.575(01) CABLE HARNESS : 87370061

ссылка	Номер детали	Кол-во	Описание
1	441166		TERMINAL,
2	441167		TERMINAL,
3	441159		CONNECTOR, WIRE,
4	334787		CABLE TERMINAL,
X03984806090			CONNECTOR, WIRE, X39
	84806091		CONNECTOR, WIRE,
	84607244		TERMINAL,
	84607242		SEAL,
X04084400773			CONNECTOR, WIRE, X40
	84441874		CONNECTOR, WIRE,
	84068583		PLUG,
	86500035		TERMINAL,
	84074628		CABLE TERMINAL,
X04184074631			CONNECTOR, WIRE, X41
	84074638		PLUG,
	86500036		PIN, ELECT TERMINAL,
X04284074630			CONNECTOR, WIRE, X42
	86500166		PLUG,
	86500035		TERMINAL,
X06884806457			CONNECTOR, WIRE, X68
	84806458		CONNECTOR, WIRE,
	84806460		CABLE TERMINAL,
	84100538		CONNECTOR, WIRE,
X06984078681			CONNECTOR, WIRE, X69
	84078682		TERMINAL,
X09284074635			CONNECTOR, WIRE, X92
	84074639		CONNECTOR, WIRE,
	84068583		PLUG,
	86500036		PIN, ELECT TERMINAL,

06.576(01) CABLE HARNESS : 87370098

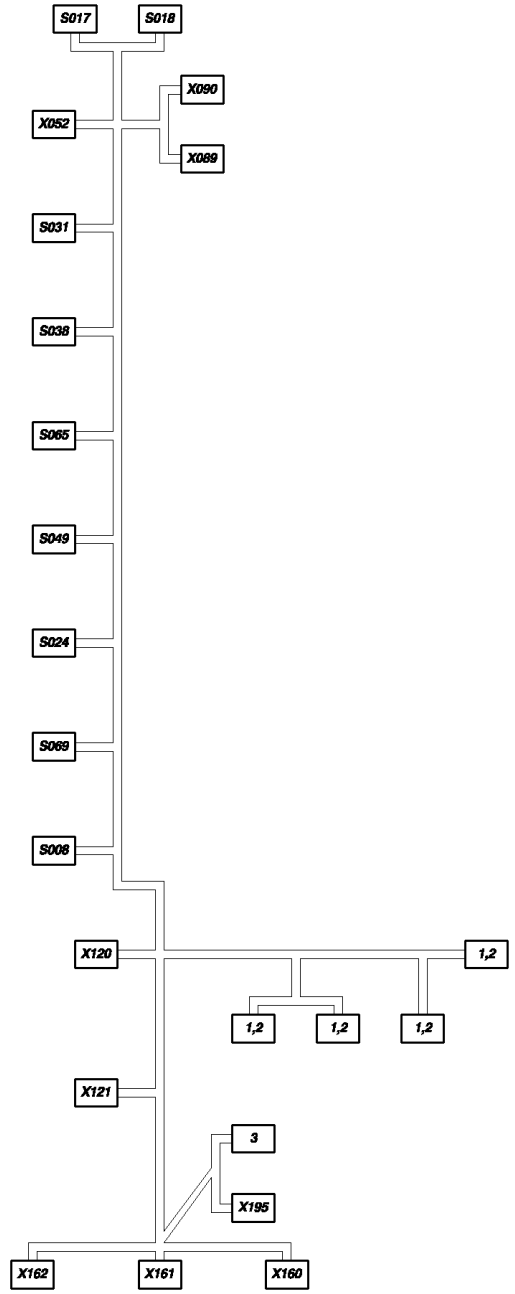

CSX7080 C659 - COMBINE (9/06-8/08)

06.576(01) CABLE HARNESS : 87370098

ссылка	Номер детали	Кол-во	Описание
1	441166		TERMINAL,
2	441159		CONNECTOR, WIRE,
3	335483		TERMINAL,
S00884607379			CONNECTOR, WIRE, S8
	334594		TERMINAL,
	334588		TERMINAL,
S01784607379			CONNECTOR, WIRE, S17
	334588		TERMINAL,
S01884607379			CONNECTOR, WIRE, S18
	334594		TERMINAL,
	334588		TERMINAL,
S02484607379			CONNECTOR, WIRE, S24
	334594		TERMINAL,
	334588		TERMINAL,
S03184607379			CONNECTOR, WIRE, S31
	334588		TERMINAL,
S03884607379			CONNECTOR, WIRE, S38
	334594		TERMINAL,
	334588		TERMINAL,
	9815256		CONNECTOR, ELEC,
S04984607379			CONNECTOR, WIRE, S49
	334594		TERMINAL,
	334588		TERMINAL,
S06584607379			CONNECTOR, WIRE, S65
	334594		TERMINAL,
	334588		TERMINAL,
S06984607379			CONNECTOR, WIRE, S69
	334588		TERMINAL,
X05284818419			CONNECTOR, WIRE, X52
	442243		CONNECTOR, ELEC,
X08984607372			CONNECTOR, WIRE, X89
	84607373		STOP DEVICE,
X09084607372			CONNECTOR, WIRE, X90
	84607373		STOP DEVICE,
X1219510666			CONNECTOR, WIRE, X121
	9815256		CONNECTOR, ELEC,
	9813989		TERMINAL,
X1229510666			CONNECTOR, WIRE, X122
	9815256		CONNECTOR, ELEC,
	9813989		TERMINAL,
X16084400776			CONNECTOR, WIRE, X160
	84441874		CONNECTOR, WIRE,
	86500035		TERMINAL,
X16184400775			CONNECTOR, WIRE, X161

CSX7080 C659 - COMBINE (9/06-8/08)

06.576(01) CABLE HARNESS : 87370098

ссылка	Номер детали	Кол-во	Описание
	84441874		CONNECTOR, WIRE,
	86500035		TERMINAL,
	X16284400771		CONNECTOR, WIRE, X162
	84441874		CONNECTOR, WIRE,
	86500035		TERMINAL,
	84074628		CABLE TERMINAL,
	84068583		PLUG,
	X19584457868		CONNECTOR, WIRE, X195
	87047058		
	84457872		CABLE TERMINAL,
	87047059		

06.577(01) CABLE HARNESS : 87370327

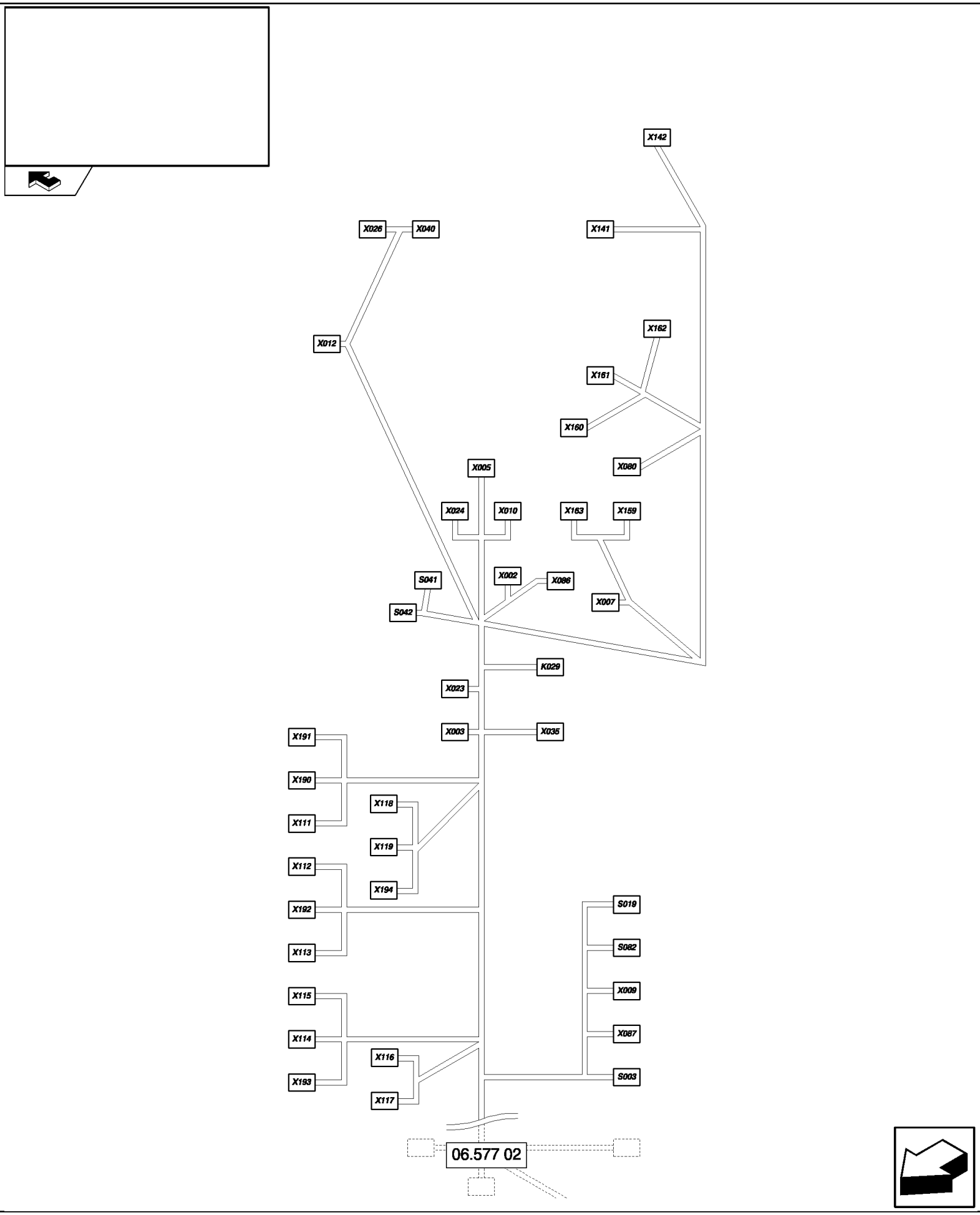

CSX7080 C659 - COMBINE (9/06-8/08)

06.577(01) CABLE HARNESS : 87370327

ссылка	Номер детали	Кол-во	Описание
K	029439588		SUPPORT, K29
	334588		TERMINAL,
S	003441166		TERMINAL, S3
	441167		TERMINAL,
	441159		CONNECTOR, WIRE,
S	01984607379		CONNECTOR, WIRE, S19
	334588		TERMINAL,
S	041441166		TERMINAL, S41
	441167		TERMINAL,
	441159		CONNECTOR, WIRE,
S	042426199		TERMINAL, S42
S	08284607379		CONNECTOR, WIRE, S82
	334588		TERMINAL,
X	002455780		TERMINAL, X2
X	003335483		TERMINAL, X3
	455780		TERMINAL,
	335482		TERMINAL,
X	00584400777		TAB, LOCKING, X5
	86500036		PIN, ELECT TERMINAL,
	84068583		PLUG,
X	00784400780		CONNECTOR, WIRE, X7
	86500036		PIN, ELECT TERMINAL,
	84068583		PLUG,
X	009334588		TERMINAL, X9
	919415		TERMINAL,
	441159		CONNECTOR, WIRE,
X	01084807216		CONNECTOR, WIRE, X10
	86500036		PIN, ELECT TERMINAL,
	84807672		CABLE TERMINAL,
	84807680		TAB, LOCKING,
X	01284400780		CONNECTOR, WIRE, X12
	86500036		PIN, ELECT TERMINAL,
X	02384074635		CONNECTOR, WIRE, X23
	86500036		PIN, ELECT TERMINAL,
	84074639		CONNECTOR, WIRE,
X	02484400772		CONNECTOR, WIRE, X24
	86500036		PIN, ELECT TERMINAL,
	84807672		CABLE TERMINAL,
	84068583		PLUG,
X	02684400777		TAB, LOCKING, X26
	86500036		PIN, ELECT TERMINAL,
X	03584074254		CONNECTOR, WIRE, X35
	86500035		TERMINAL,
X	04084400774		CONNECTOR, WIRE, X40

CSX7080 C659 - COMBINE (9/06-8/08)

06.577(01) CABLE HARNESS : 87370327

ссылка	Номер детали	Кол-во	Описание
	86500036		PIN, ELECT TERMINAL,
	84807672		CABLE TERMINAL,
	84068583		PLUG,
X080441166			TERMINAL, X80
	441159		CONNECTOR, WIRE,
X086335483			TERMINAL, X86
	455780		TERMINAL,
	84818184		CABLE TERMINAL,
X087919415			TERMINAL, X87
	441159		CONNECTOR, WIRE,
X1119811261			CONNECTOR, ELEC, X111
	9813989		TERMINAL,
X1129811261			CONNECTOR, ELEC, X112
	9813989		TERMINAL,
X1139811261			CONNECTOR, ELEC, X113
	9813989		TERMINAL,
X1149811216			X114
	9813989		TERMINAL,
X1159811216			X115
	9813989		TERMINAL,
X116354118			TERMINAL, X116
	444853		
X117354118			TERMINAL, X117
	335480		
X118354118			TERMINAL, X118
X119354118			TERMINAL, X119
X14184058011			CONNECTOR, WIRE, X141
	86500036		PIN, ELECT TERMINAL,
X14284058011			CONNECTOR, WIRE, X142
	86500036		PIN, ELECT TERMINAL,
	84068583		PLUG,
X15984400774			CONNECTOR, WIRE, X159
	86500036		PIN, ELECT TERMINAL,
	84807672		CABLE TERMINAL,
	84068583		PLUG,
X16084400777			TAB, LOCKING, X160
	86500036		PIN, ELECT TERMINAL,
	84068583		PLUG,
X16184400780			CONNECTOR, WIRE, X161
	86500036		PIN, ELECT TERMINAL,
X16284400772			CONNECTOR, WIRE, X162
	86500036		PIN, ELECT TERMINAL,
	84807672		CABLE TERMINAL,
	84068583		PLUG,

CSX7080 C659 - COMBINE (9/06-8/08)

06.577(01) CABLE HARNESS : 87370327

ссылка	Номер детали	Кол-во	Описание
	X16384400777		TAB, LOCKING, X163
	86500036		PIN, ELECT TERMINAL,
	84068583		PLUG,
	X1909811261		CONNECTOR, ELEC, X190
	9813989		TERMINAL,
	X191354118		TERMINAL, X191
	X192354118		TERMINAL, X192
	X193354118		TERMINAL, X193
	X1949505300		CONNECTOR, WIRE, X194
	9506052		TERMINAL,

06.577(02) CABLE HARNESS : 87370327

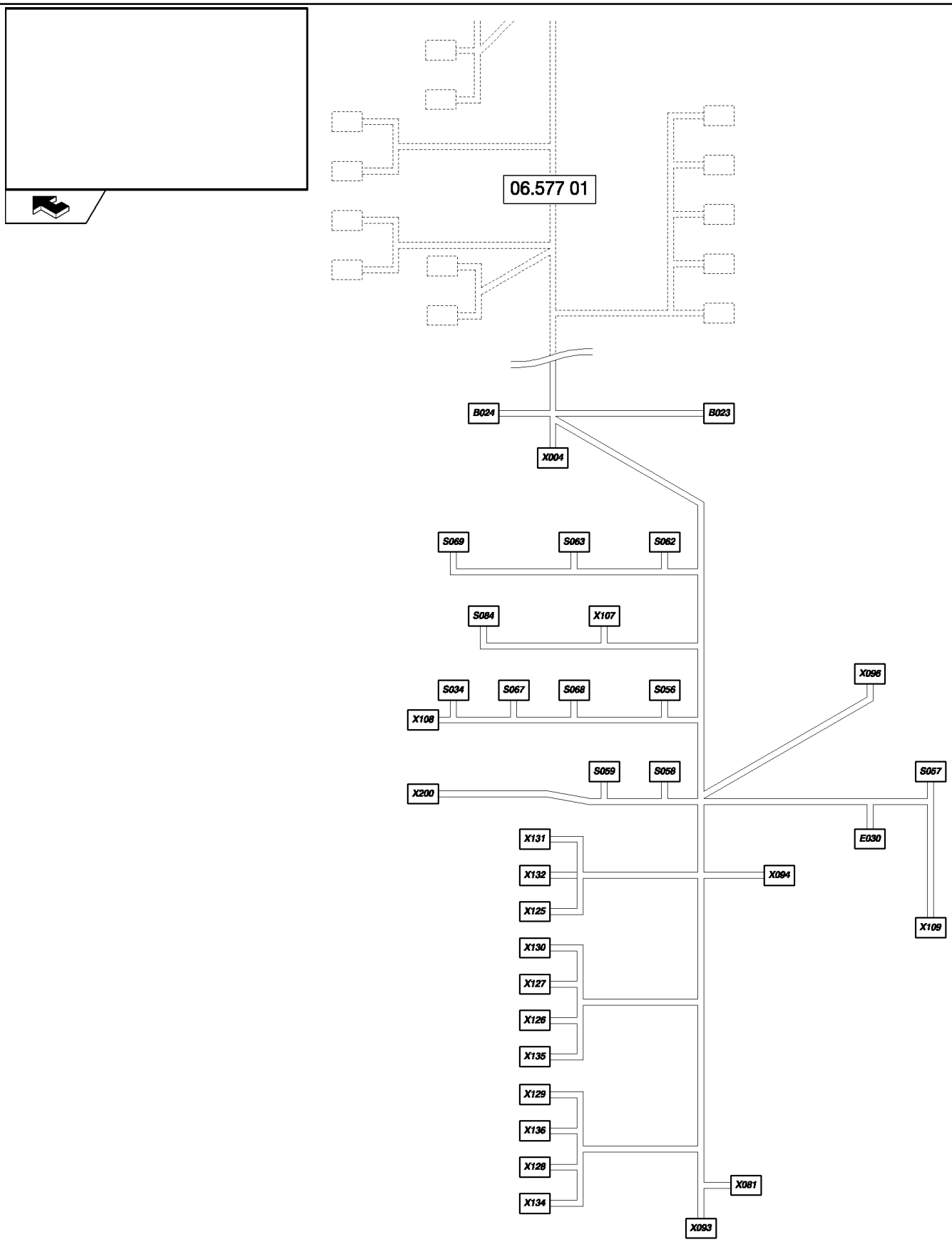

CSX7080 C659 - COMBINE (9/06-8/08)

06.577(02) CABLE HARNESS : 87370327

ссылка	Номер детали	Кол-во	Описание
B02384462251			B23
	430026		TERMINAL,
	350674		CONNECTOR, WIRE,
B02484462251			B24
	430026		TERMINAL,
	350674		CONNECTOR, WIRE,
E030441166			TERMINAL, E30
	441167		TERMINAL,
	919415		TERMINAL,
	441159		CONNECTOR, WIRE,
S03484607379			CONNECTOR, WIRE, S34
	334588		TERMINAL,
	334594		TERMINAL,
S05684607379			CONNECTOR, WIRE, S56
	334588		TERMINAL,
	334594		TERMINAL,
S057441166			TERMINAL, S57
	441159		CONNECTOR, WIRE,
S05884607379			CONNECTOR, WIRE, S58
	334588		TERMINAL,
	334594		TERMINAL,
S05984607379			CONNECTOR, WIRE, S59
	334588		TERMINAL,
	334594		TERMINAL,
S06284807268			CONNECTOR, WIRE, S62
	84807270		CABLE TERMINAL,
	84807269		CONNECTOR, WIRE,
S06384607379			CONNECTOR, WIRE, S63
	334588		TERMINAL,
	334594		TERMINAL,
S06784607379			CONNECTOR, WIRE, S67
	334588		TERMINAL,
	334594		TERMINAL,
S06884607379			CONNECTOR, WIRE, S68
	334588		TERMINAL,
	334594		TERMINAL,
S06984607379			CONNECTOR, WIRE, S69
	334588		TERMINAL,
	334594		TERMINAL,
S08487351127			S84
	441166		TERMINAL,
	441159		CONNECTOR, WIRE,
	87351119		
X00484818192			CONNECTOR, ELEC, X4

CSX7080 C659 - COMBINE (9/06-8/08)

06.577(02) CABLE HARNESS : 87370327

ссылка	Номер детали	Кол-во	Описание
	NS		NOT SERVICED,
	X081447569		CONNECTOR, WIRE, X81
	NS		NOT SERVICED,
	X09384074631		CONNECTOR, WIRE, X93
	84074638		PLUG,
	86500036		PIN, ELECT TERMINAL,
	X09484400775		CONNECTOR, WIRE, X94
	86500035		TERMINAL,
	84068583		PLUG,
	X096335483		TERMINAL, X96
	455780		TERMINAL,
	84818184		CABLE TERMINAL,
	X107334595		TERMINAL, X107
	334588		TERMINAL,
	X108446133		CONNECTOR, ELEC, X108
	441166		TERMINAL,
	919415		TERMINAL,
	X10984007631		TERMINAL, X109
	430026		TERMINAL,
	X1259505300		CONNECTOR, WIRE, X125
	9506052		TERMINAL,
	9506053		TERMINAL,
	X1269505300		CONNECTOR, WIRE, X126
	9506052		TERMINAL,
	9506053		TERMINAL,
	X1279505300		CONNECTOR, WIRE, X127
	9506052		TERMINAL,
	X1289505300		CONNECTOR, WIRE, X128
	9506052		TERMINAL,
	9506053		TERMINAL,
	X1299505300		CONNECTOR, WIRE, X129
	9506052		TERMINAL,
	X1309505300		CONNECTOR, WIRE, X130
	9506052		TERMINAL,
	9506053		TERMINAL,
	X1319505300		CONNECTOR, WIRE, X131
	9506052		TERMINAL,
	9506053		TERMINAL,
	X1329505300		CONNECTOR, WIRE, X132
	9506052		TERMINAL,
	9506053		TERMINAL,
	X134354118		TERMINAL, X134
	X135354118		TERMINAL, X135
	X136354118		TERMINAL, X136

CSX7080 C659 - COMBINE (9/06-8/08)

06.577(02) CABLE HARNESS : 87370327

ссылка	Номер детали	Кол-во	Описание
X200	446133		CONNECTOR, ELEC, X200
	441166		TERMINAL,

CSX7080 C659 - COMBINE (9/06-8/08)

06.578(01) CABLE HARNESS : 87371902

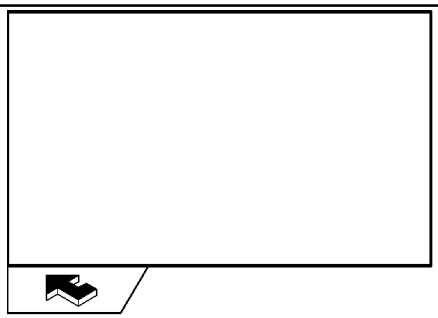

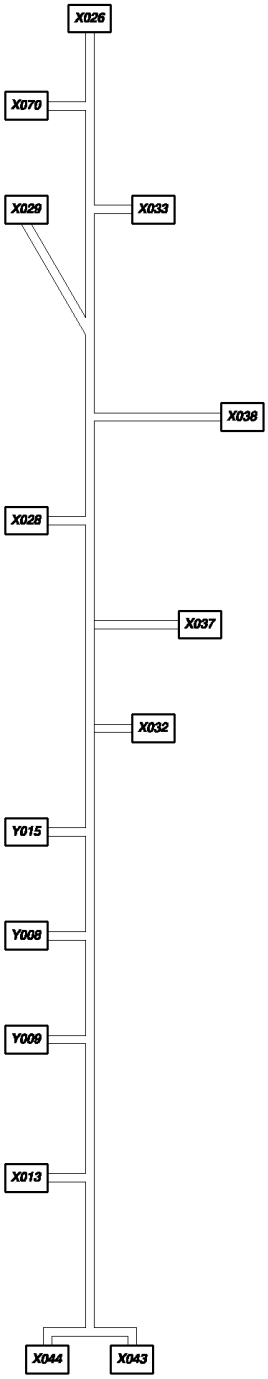

CSX7080 C659 - COMBINE (9/06-8/08)

06.578(01) CABLE HARNESS : 87371902

ссылка	Номер детали	Кол-во	Описание
X01384074631			CONNECTOR, WIRE, X13
	84074638		PLUG,
	86500036		PIN, ELECT TERMINAL,
	84068583		PLUG,
X02684400776			CONNECTOR, WIRE, X26
	84441874		CONNECTOR, WIRE,
	86500035		TERMINAL,
X02884074631			CONNECTOR, WIRE, X28
	84074638		PLUG,
	86500036		PIN, ELECT TERMINAL,
X02984074631			CONNECTOR, WIRE, X29
	84074638		PLUG,
	86500036		PIN, ELECT TERMINAL,
X03284074631			CONNECTOR, WIRE, X32
	84074638		PLUG,
	86500036		PIN, ELECT TERMINAL,
X03384074631			CONNECTOR, WIRE, X33
	84074638		PLUG,
	86500036		PIN, ELECT TERMINAL,
X03784074631			CONNECTOR, WIRE, X37
	84074638		PLUG,
	86500036		PIN, ELECT TERMINAL,
X03884449647			CONNECTOR, WIRE, X38
	84806312		CONNECTOR, WIRE,
	86500036		PIN, ELECT TERMINAL,
X04384400439			CONNECTOR, WIRE, X43
	84400440		CONNECTOR, WIRE,
	84400441		PLUG,
X04484400439			CONNECTOR, WIRE, X44
	84400440		CONNECTOR, WIRE,
	84400441		PLUG,
X07084074635			CONNECTOR, WIRE, X70
	84074639		CONNECTOR, WIRE,
	86500036		PIN, ELECT TERMINAL,
Y00884607213			CONNECTOR, WIRE, Y8
	84607243		CONNECTOR, WIRE,
	84607244		TERMINAL,
	84607242		SEAL,
Y00984607213			CONNECTOR, WIRE, Y9
	84607243		CONNECTOR, WIRE,
	84607244		TERMINAL,
	84607242		SEAL,
Y01584607213			CONNECTOR, WIRE, Y15
	84607243		CONNECTOR, WIRE,

06.578(01) CABLE HARNESS : 87371902

ссылка	Номер детали	Кол-во	Описание
	84607244		TERMINAL,
	84607242		SEAL,

06.580(01) CABLE HARNESS : 87396122

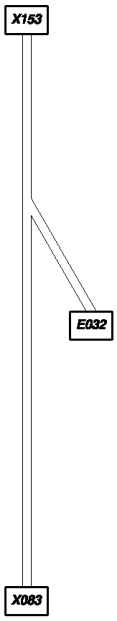

CSX7080 C659 - COMBINE (9/06-8/08)

06.580(01) CABLE HARNESS : 87396122

ссылка	Номер детали	Кол-во	Описание
	E032430026		TERMINAL, E32
	X08384074630		CONNECTOR, WIRE, X83
	86500166		PLUG,
	86500035		TERMINAL,
	X15384074630		CONNECTOR, WIRE, X153
	86500166		PLUG,
	86500035		TERMINAL,
	86500036		PIN, ELECT TERMINAL,

06.582(01) CABLE HARNESS : 87396443

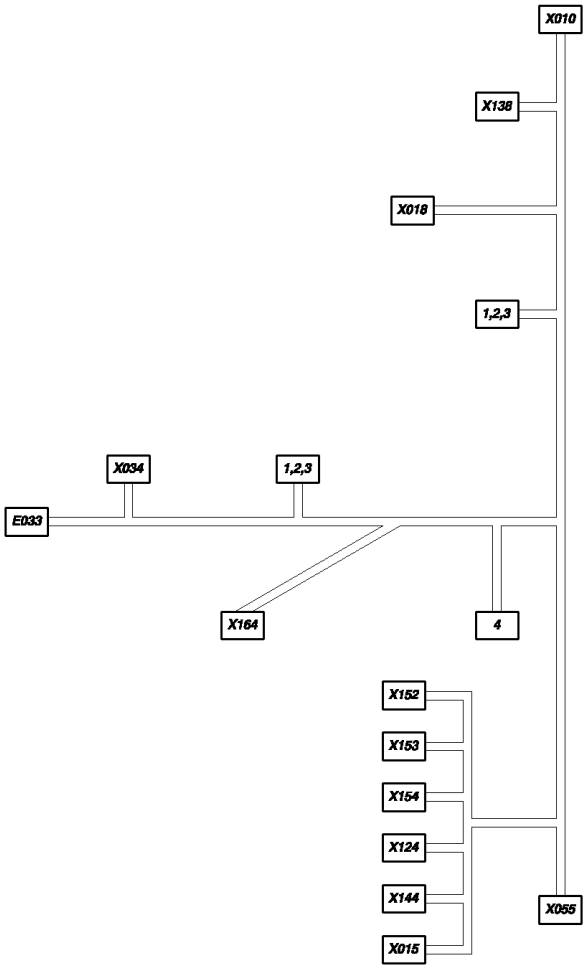

CSX7080 C659 - COMBINE (9/06-8/08)

06.582(01) CABLE HARNESS : 87396443

ссылка	Номер детали	Кол-во	Описание
1	441166		TERMINAL,
2	441167		TERMINAL,
3	441159		CONNECTOR, WIRE,
4	334787		CABLE TERMINAL,
	E033430026		TERMINAL, E33
	X01084807217		CONNECTOR, WIRE, X10
	84441874		CONNECTOR, WIRE,
	86500035		TERMINAL,
	84074628		CABLE TERMINAL,
	84807680		TAB, LOCKING,
	X01584449647		CONNECTOR, WIRE, X15
	84806312		CONNECTOR, WIRE,
	86500036		PIN, ELECT TERMINAL,
	84068583		PLUG,
	84806918		CONNECTOR, WIRE,
	84806919		PLUG,
	86500035		TERMINAL,
	X01884806457		CONNECTOR, WIRE, X18
	84806458		CONNECTOR, WIRE,
	84806460		CABLE TERMINAL,
	84100538		CONNECTOR, WIRE,
	X03484074635		CONNECTOR, WIRE, X34
	84074639		CONNECTOR, WIRE,
	86500036		PIN, ELECT TERMINAL,
	X05584074631		CONNECTOR, WIRE, X55
	84074638		PLUG,
	86500036		PIN, ELECT TERMINAL,
	X12484449647		CONNECTOR, WIRE, X124
	84806312		CONNECTOR, WIRE,
	86500036		PIN, ELECT TERMINAL,
	84068583		PLUG,
	84806918		CONNECTOR, WIRE,
	84806919		PLUG,
	86500035		TERMINAL,
	X13884074631		CONNECTOR, WIRE, X138
	84074638		PLUG,
	86500036		PIN, ELECT TERMINAL,
	X14484449647		CONNECTOR, WIRE, X144
	84806312		CONNECTOR, WIRE,
	86500036		PIN, ELECT TERMINAL,
	84806918		CONNECTOR, WIRE,
	84806919		PLUG,
	86500035		TERMINAL,
	X15284074631		CONNECTOR, WIRE, X152

CSX7080 C659 - COMBINE (9/06-8/08)

06.582(01) CABLE HARNESS : 87396443

ссылка	Номер детали	Кол-во	Описание
	84074638		PLUG,
	86500036		PIN, ELECT TERMINAL,
X15384074631			CONNECTOR, WIRE, X153
	84074638		PLUG,
	86500036		PIN, ELECT TERMINAL,
X15484449647			CONNECTOR, WIRE, X154
	84806312		CONNECTOR, WIRE,
	86500036		PIN, ELECT TERMINAL,
	84806918		CONNECTOR, WIRE,
	84806919		PLUG,
	86500035		TERMINAL,
X16484074631			CONNECTOR, WIRE, X164
	84074638		PLUG,
	86500036		PIN, ELECT TERMINAL,

06.583(01) CABLE HARNESS : 87368619

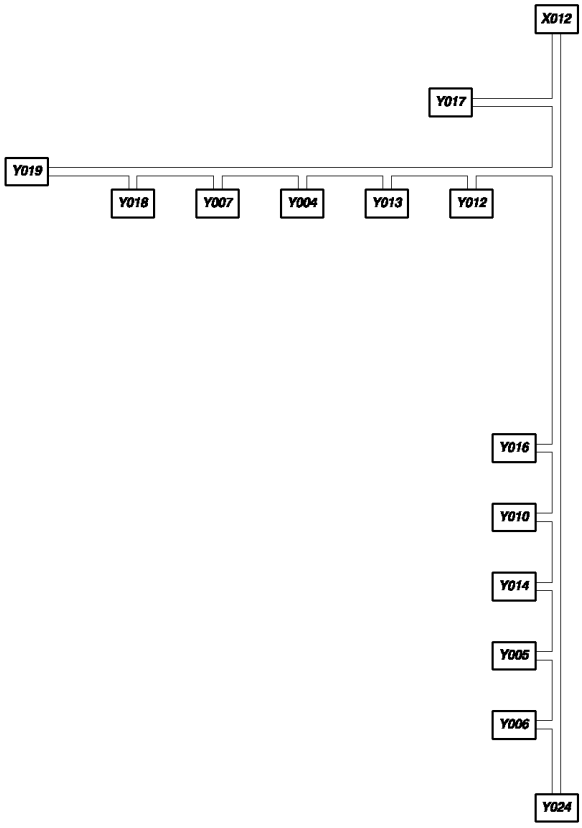

CSX7080 C659 - COMBINE (9/06-8/08)

06.583(01) CABLE HARNESS : 87368619

ссылка	Номер детали	Кол-во	Описание
X01284400775			CONNECTOR, WIRE, X12
84441874			CONNECTOR, WIRE,
86500035			TERMINAL,
84068583			PLUG,
Y00484607243			CONNECTOR, WIRE, Y4
84607213			CONNECTOR, WIRE,
84607244			TERMINAL,
84607242			SEAL,
Y00584607243			CONNECTOR, WIRE, Y5
84607213			CONNECTOR, WIRE,
84607244			TERMINAL,
84607242			SEAL,
Y00684607243			CONNECTOR, WIRE, Y6
84607213			CONNECTOR, WIRE,
84607244			TERMINAL,
84607242			SEAL,
Y00784607243			CONNECTOR, WIRE, Y7
84607213			CONNECTOR, WIRE,
84607244			TERMINAL,
84607242			SEAL,
Y01084607243			CONNECTOR, WIRE, Y10
84607213			CONNECTOR, WIRE,
84607244			TERMINAL,
84607242			SEAL,
Y01284607243			CONNECTOR, WIRE, Y12
84607213			CONNECTOR, WIRE,
84607244			TERMINAL,
84607242			SEAL,
Y01384607243			CONNECTOR, WIRE, Y13
84607213			CONNECTOR, WIRE,
84607244			TERMINAL,
84607242			SEAL,
Y01484607243			CONNECTOR, WIRE, Y14
84607213			CONNECTOR, WIRE,
84607244			TERMINAL,
84607242			SEAL,
Y01684607243			CONNECTOR, WIRE, Y16
84607213			CONNECTOR, WIRE,
84607244			TERMINAL,
84607242			SEAL,
Y01784607243			CONNECTOR, WIRE, Y17
84607213			CONNECTOR, WIRE,
84607244			TERMINAL,
84607242			SEAL,

CSX7080 C659 - COMBINE (9/06-8/08)

06.583(01) CABLE HARNESS : 87368619

ссылка	Номер детали	Кол-во	Описание
Y01884607243			CONNECTOR, WIRE, Y18
	84607213		CONNECTOR, WIRE,
	84607244		TERMINAL,
	84607242		SEAL,
Y01984607243			CONNECTOR, WIRE, Y19
	84607213		CONNECTOR, WIRE,
	84607244		TERMINAL,
	84607242		SEAL,
Y02484607243			CONNECTOR, WIRE, Y24
	84607213		CONNECTOR, WIRE,
	84607244		TERMINAL,
	84607242		SEAL,

06.586(01) CABLE HARNESS : 87377154

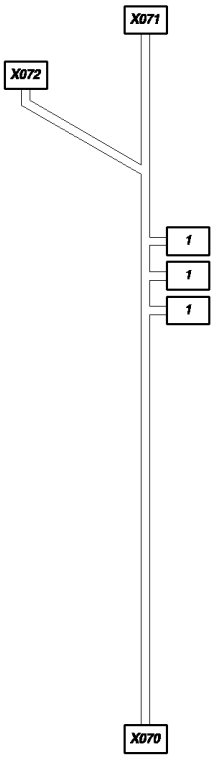

CSX7080 C659 - COMBINE (9/06-8/08)

06.586(01) CABLE HARNESS : 87377154

ссылка	Номер детали	Кол-во	Описание
1	NS		NOT SERVICED,
X070	NS		NOT SERVICED, X70
X071	NS		NOT SERVICED, X71
X072	84074632		CONNECTOR, WIRE, X72
	9611173		PLUG,
	86500035		TERMINAL,

06.589(01) CABLE HARNESS : 87391332

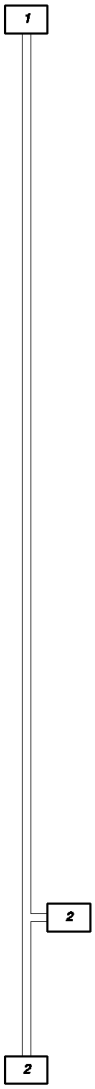

CSX7080 C659 - COMBINE (9/06-8/08)

06.589(01) CABLE HARNESS : 87391332

ссылка	Номер детали	Кол-во	Описание
1	444851		
2	455780		TERMINAL,

06.590(01) CABLE HARNESS : 87399335 - D544

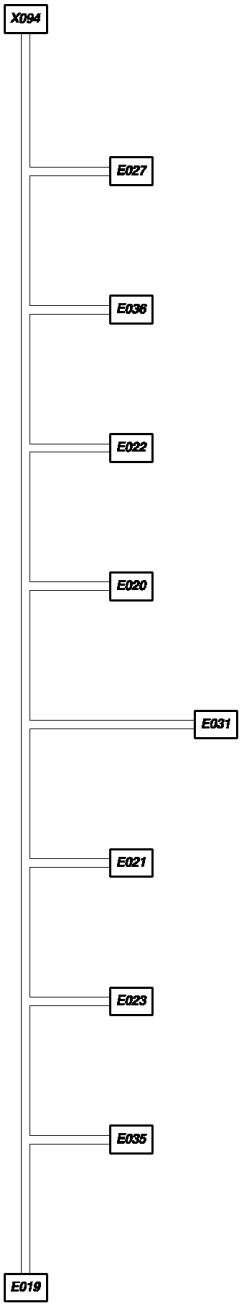

CSX7080 C659 - COMBINE (9/06-8/08)

06.590(01) CABLE HARNESS : 87399335 - D544

ссылка	Номер детали	Кол-во	Описание
	E01987518643		CONNECTOR, WIRE, E19
	84607244		TERMINAL,
	84607242		SEAL,
	E02087518643		CONNECTOR, WIRE, E20
	84607244		TERMINAL,
	84607242		SEAL,
	E02187518643		CONNECTOR, WIRE, E21
	84607244		TERMINAL,
	84607242		SEAL,
	E02287518643		CONNECTOR, WIRE, E22
	84607244		TERMINAL,
	84607242		SEAL,
	E02387518643		CONNECTOR, WIRE, E23
	84607244		TERMINAL,
	84607242		SEAL,
	E02787518643		CONNECTOR, WIRE, E27
	84607244		TERMINAL,
	84607242		SEAL,
	E03187518643		CONNECTOR, WIRE, E31
	84607244		TERMINAL,
	84607242		SEAL,
	E03587518643		CONNECTOR, WIRE, E35
	84607244		TERMINAL,
	84607242		SEAL,
	E03687518643		CONNECTOR, WIRE, E36
	84607244		TERMINAL,
	84607242		SEAL,
	X09484400780		CONNECTOR, WIRE, X94
	86500036		PIN, ELECT TERMINAL,
	84068583		PLUG,

06.591(01) CABLE HARNESS : 87598497

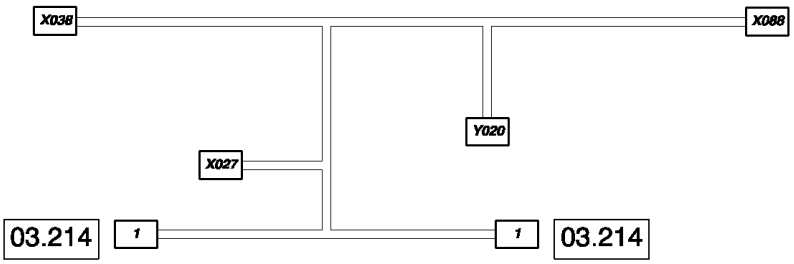

CSX7080 C659 - COMBINE (9/06-8/08)

06.591(01) CABLE HARNESS : 87598497

ссылка	Номер детали	Кол-во	Описание
1	84004134		TERMINAL,
X02784074631			CONNECTOR, WIRE, X27
	86500036		PIN, ELECT TERMINAL,
	84074638		PLUG,
X03884806918			CONNECTOR, WIRE, X38
	86500035		TERMINAL,
	84806919		PLUG,
X08884078681			CONNECTOR, WIRE, X88
	84078682		TERMINAL,
Y02084019407			CONNECTOR, HYD., Y20
	426199		TERMINAL,

CSX7080 C659 - COMBINE (9/06-8/08)

06.592(01) CABLE HARNESS : 87598920

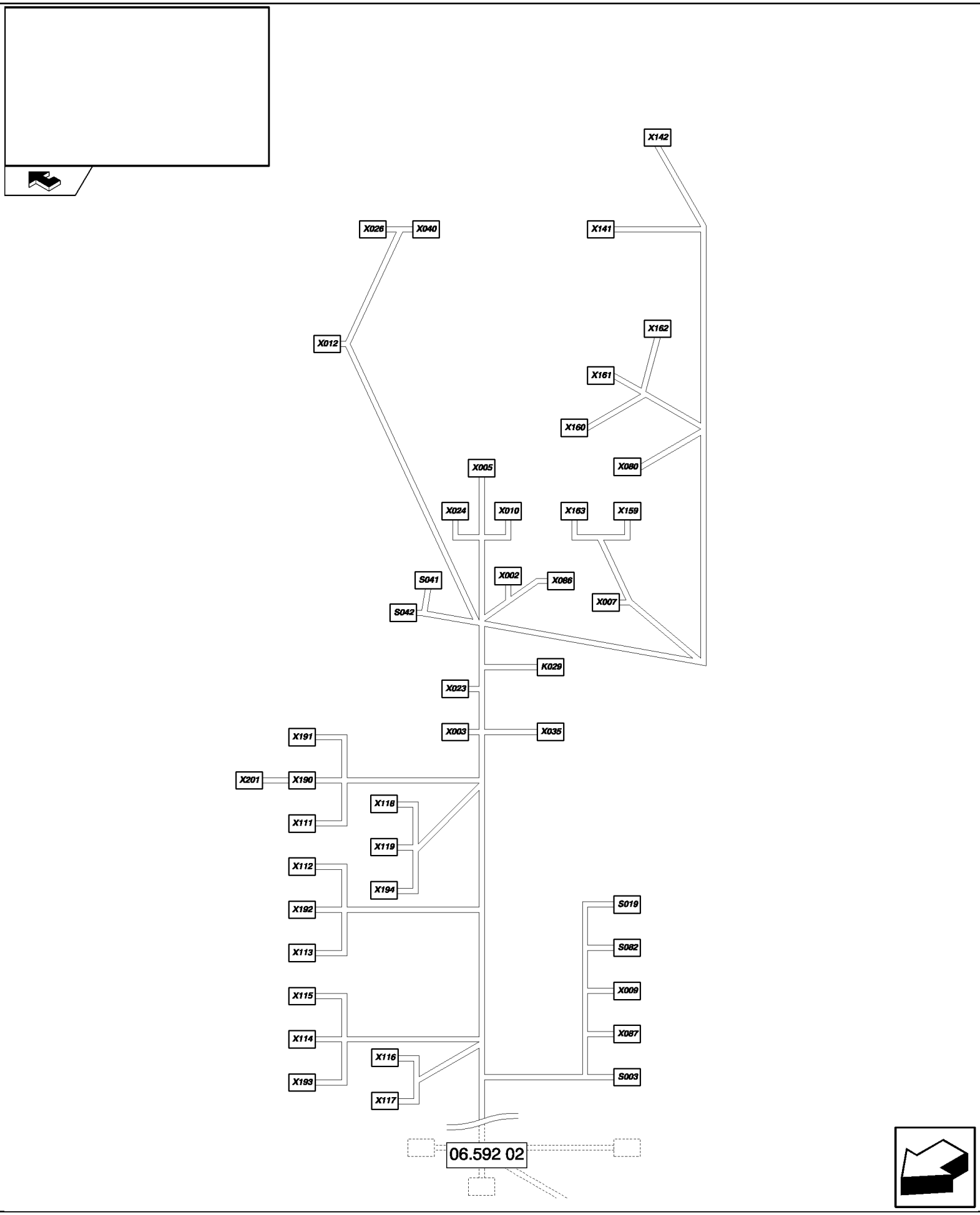

CSX7080 C659 - COMBINE (9/06-8/08)

06.592(01) CABLE HARNESS : 87598920

ссылка	Номер детали	Кол-во	Описание
	K029439588		SUPPORT, K29
	334588		TERMINAL,
	S003441166		TERMINAL, S3
	441167		TERMINAL,
	441159		CONNECTOR, WIRE,
	S01984607379		CONNECTOR, WIRE, S19
	334588		TERMINAL,
	S041441166		TERMINAL, S41
	441167		TERMINAL,
	441159		CONNECTOR, WIRE,
	S042426199		TERMINAL, S42
	S08284607379		CONNECTOR, WIRE, S82
	334588		TERMINAL,
	X002455780		TERMINAL, X2
	X003335483		TERMINAL, X3
	455780		TERMINAL,
	335482		TERMINAL,
	X00584400777		TAB, LOCKING, X5
	86500036		PIN, ELECT TERMINAL,
	84068583		PLUG,
	X00784400780		CONNECTOR, WIRE, X7
	86500036		PIN, ELECT TERMINAL,
	84068583		PLUG,
	X009334588		TERMINAL, X9
	919415		TERMINAL,
	441159		CONNECTOR, WIRE,
	X01084807216		CONNECTOR, WIRE, X10
	86500036		PIN, ELECT TERMINAL,
	84807672		CABLE TERMINAL,
	84807680		TAB, LOCKING,
	X01284400780		CONNECTOR, WIRE, X12
	86500036		PIN, ELECT TERMINAL,
	X02384074635		CONNECTOR, WIRE, X23
	86500036		PIN, ELECT TERMINAL,
	84074639		CONNECTOR, WIRE,
	X02484400772		CONNECTOR, WIRE, X24
	86500036		PIN, ELECT TERMINAL,
	84807672		CABLE TERMINAL,
	84068583		PLUG,
	X02684400777		TAB, LOCKING, X26
	86500036		PIN, ELECT TERMINAL,
	X03584074254		CONNECTOR, WIRE, X35
	86500035		TERMINAL,
	X04084400774		CONNECTOR, WIRE, X40

06.592(01) CABLE HARNESS : 87598920

ссылка	Номер детали	Кол-во	Описание
	86500036		PIN, ELECT TERMINAL,
	84807672		CABLE TERMINAL,
	84068583		PLUG,
	X080441166		TERMINAL, X80
	441159		CONNECTOR, WIRE,
	X086335483		TERMINAL, X86
	455780		TERMINAL,
	84818184		CABLE TERMINAL,
	X087919415		TERMINAL, X87
	441159		CONNECTOR, WIRE,
	X1119811261		CONNECTOR, ELEC, X111
	9813989		TERMINAL,
	X1129811261		CONNECTOR, ELEC, X112
	9813989		TERMINAL,
	X1139811261		CONNECTOR, ELEC, X113
	9813989		TERMINAL,
	X1149811216		X114
	9813989		TERMINAL,
	X1159811216		X115
	9813989		TERMINAL,
	X116354118		TERMINAL, X116
	444853		
	X117354118		TERMINAL, X117
	335480		
	X118354118		TERMINAL, X118
	X119354118		TERMINAL, X119
	X14184058011		CONNECTOR, WIRE, X141
	86500036		PIN, ELECT TERMINAL,
	X14284058011		CONNECTOR, WIRE, X142
	86500036		PIN, ELECT TERMINAL,
	84068583		PLUG,
	X15984400774		CONNECTOR, WIRE, X159
	86500036		PIN, ELECT TERMINAL,
	84807672		CABLE TERMINAL,
	84068583		PLUG,
	X16084400777		TAB, LOCKING, X160
	86500036		PIN, ELECT TERMINAL,
	84068583		PLUG,
	X16184400780		CONNECTOR, WIRE, X161
	86500036		PIN, ELECT TERMINAL,
	X16284400772		CONNECTOR, WIRE, X162
	86500036		PIN, ELECT TERMINAL,
	84807672		CABLE TERMINAL,
	84068583		PLUG,

CSX7080 C659 - COMBINE (9/06-8/08)

06.592(01) CABLE HARNESS : 87598920

ссылка	Номер детали	Кол-во	Описание
	X16384400777		TAB, LOCKING, X163
	86500036		PIN, ELECT TERMINAL,
	84068583		PLUG,
	X1909811261		CONNECTOR, ELEC, X190
	9813989		TERMINAL,
	X191354118		TERMINAL, X191
	X192354118		TERMINAL, X192
	X193354118		TERMINAL, X193
	X1949505300		CONNECTOR, WIRE, X194
	9506052		TERMINAL,
	X20184806918		CONNECTOR, WIRE,
	84806919		PLUG,

CSX7080 C659 - COMBINE (9/06-8/08)

06.592(02) CABLE HARNESS : 87598920

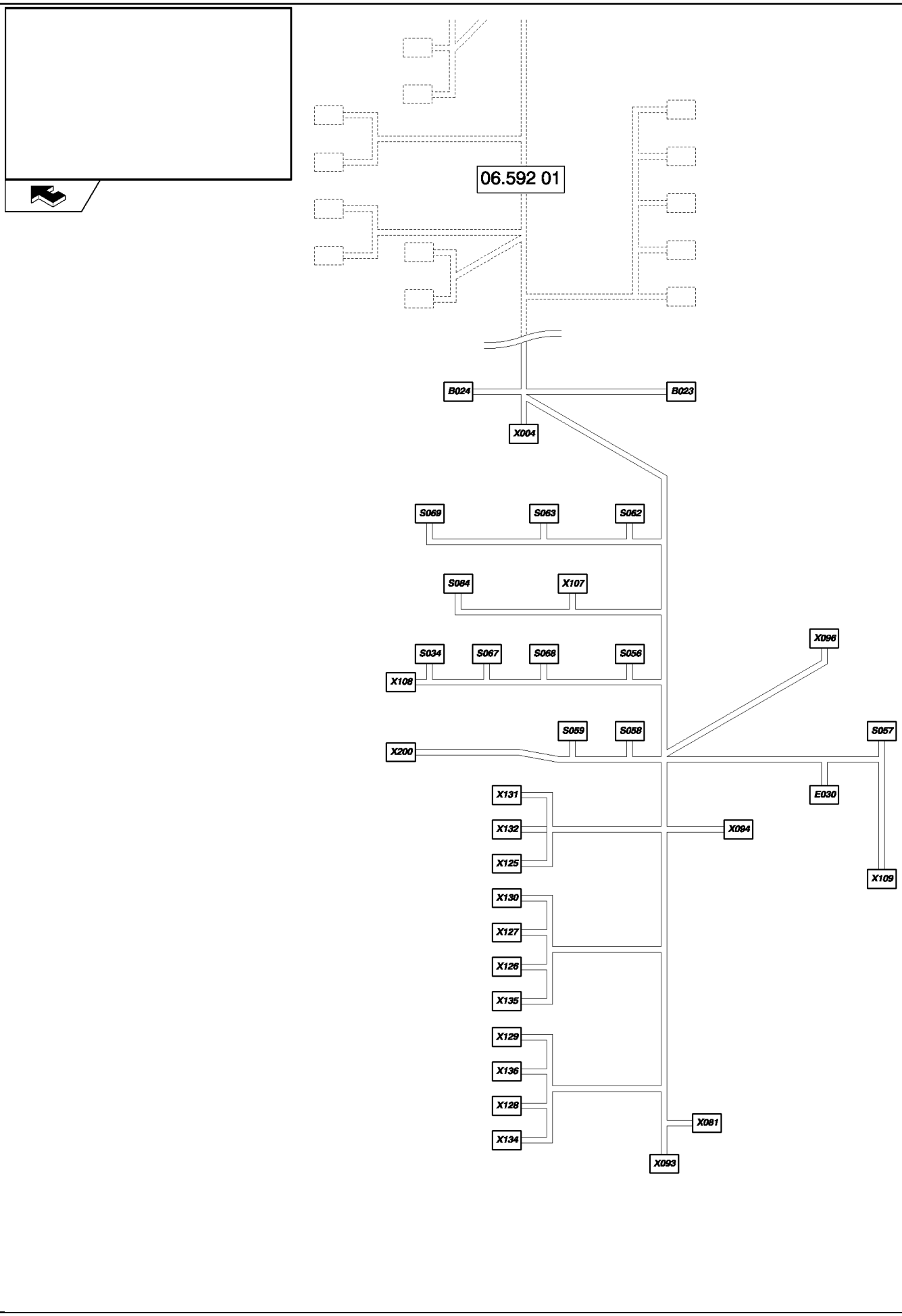

CSX7080 C659 - COMBINE (9/06-8/08)

06.592(02) CABLE HARNESS : 87598920

ссылка	Номер детали	Кол-во	Описание
B02384462251			B23
	430026		TERMINAL,
	350674		CONNECTOR, WIRE,
B02484462251			B24
	430026		TERMINAL,
	350674		CONNECTOR, WIRE,
E030441166			TERMINAL, E30
	441167		TERMINAL,
	919415		TERMINAL,
	441159		CONNECTOR, WIRE,
S03484607379			CONNECTOR, WIRE, S34
	334588		TERMINAL,
	334594		TERMINAL,
S05684607379			CONNECTOR, WIRE, S56
	334588		TERMINAL,
	334594		TERMINAL,
S057441166			TERMINAL, S57
	441159		CONNECTOR, WIRE,
S05884607379			CONNECTOR, WIRE, S58
	334588		TERMINAL,
	334594		TERMINAL,
S05984607379			CONNECTOR, WIRE, S59
	334588		TERMINAL,
	334594		TERMINAL,
S06284807268			CONNECTOR, WIRE, S62
	84807270		CABLE TERMINAL,
	84807269		CONNECTOR, WIRE,
S06384607379			CONNECTOR, WIRE, S63
	334588		TERMINAL,
	334594		TERMINAL,
S06784607379			CONNECTOR, WIRE, S67
	334588		TERMINAL,
	334594		TERMINAL,
S06884607379			CONNECTOR, WIRE, S68
	334588		TERMINAL,
	334594		TERMINAL,
S06984607379			CONNECTOR, WIRE, S69
	334588		TERMINAL,
	334594		TERMINAL,
S08487351127			S84
	441166		TERMINAL,
	441159		CONNECTOR, WIRE,
	87351119		
X00484818192			CONNECTOR, ELEC, X4

CSX7080 C659 - COMBINE (9/06-8/08)

06.592(02) CABLE HARNESS : 87598920

ссылка	Номер детали	Кол-во	Описание
	NS		NOT SERVICED,
	X081447569		CONNECTOR, WIRE, X81
	NS		NOT SERVICED,
	X09384074631		CONNECTOR, WIRE, X93
	84074638		PLUG,
	86500036		PIN, ELECT TERMINAL,
	X09484400775		CONNECTOR, WIRE, X94
	86500035		TERMINAL,
	84068583		PLUG,
	X096335483		TERMINAL, X96
	455780		TERMINAL,
	84818184		CABLE TERMINAL,
	X107334595		TERMINAL, X107
	334588		TERMINAL,
	X108446133		CONNECTOR, ELEC, X108
	441166		TERMINAL,
	919415		TERMINAL,
	X10984007631		TERMINAL, X109
	430026		TERMINAL,
	X1259505300		CONNECTOR, WIRE, X125
	9506052		TERMINAL,
	9506053		TERMINAL,
	X1269505300		CONNECTOR, WIRE, X126
	9506052		TERMINAL,
	9506053		TERMINAL,
	X1279505300		CONNECTOR, WIRE, X127
	9506052		TERMINAL,
	X1289505300		CONNECTOR, WIRE, X128
	9506052		TERMINAL,
	9506053		TERMINAL,
	X1299505300		CONNECTOR, WIRE, X129
	9506052		TERMINAL,
	X1309505300		CONNECTOR, WIRE, X130
	9506052		TERMINAL,
	9506053		TERMINAL,
	X1319505300		CONNECTOR, WIRE, X131
	9506052		TERMINAL,
	9506053		TERMINAL,
	X1329505300		CONNECTOR, WIRE, X132
	9506052		TERMINAL,
	9506053		TERMINAL,
	X134354118		TERMINAL, X134
	X135354118		TERMINAL, X135
	X136354118		TERMINAL, X136

CSX7080 C659 - COMBINE (9/06-8/08)

06.592(02) CABLE HARNESS : 87598920

ссылка	Номер детали	Кол-во	Описание
X200	446133		CONNECTOR, ELEC, X200
	441166		TERMINAL,

06.593(01) CABLE HARNESS : 87742089

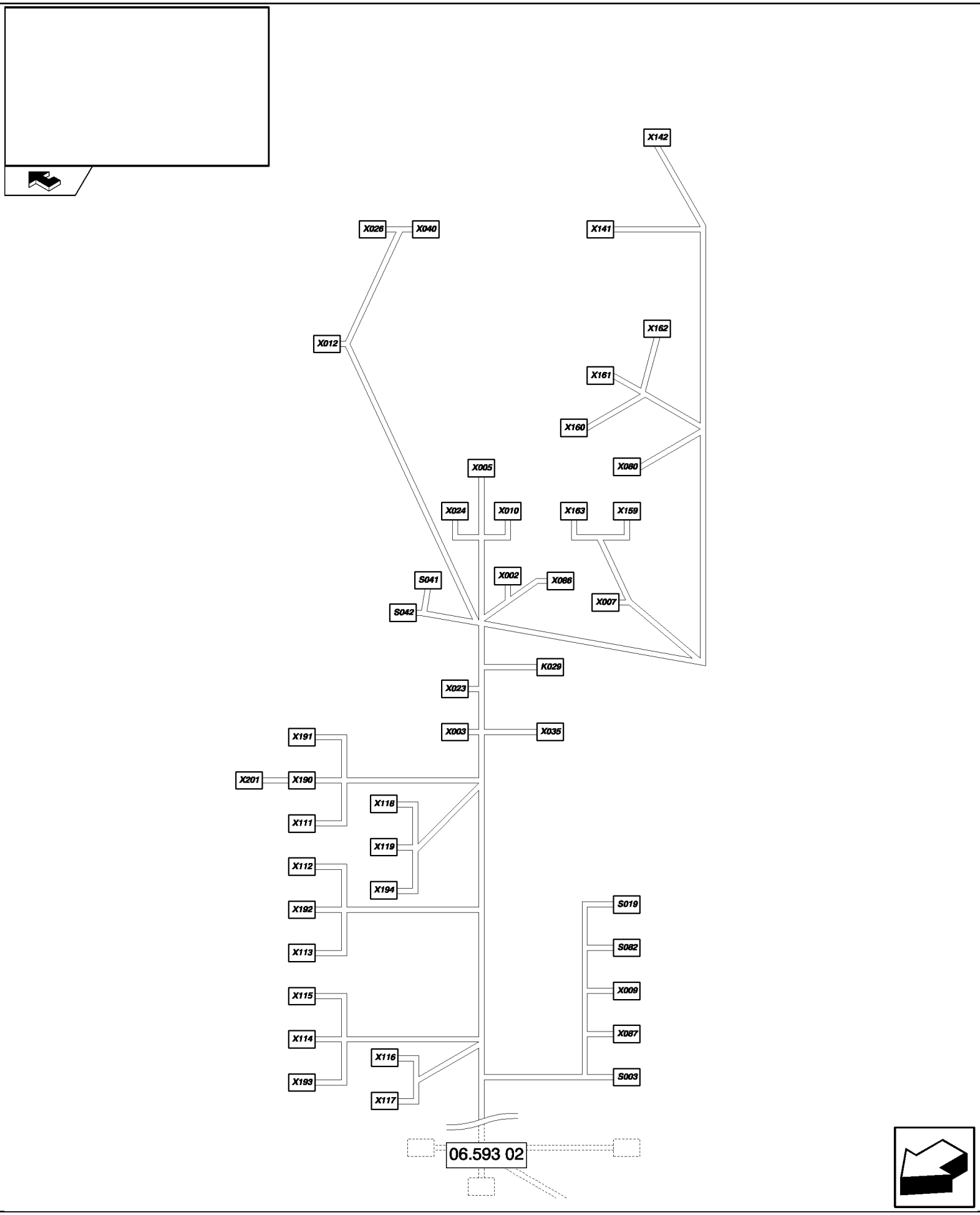

CSX7080 C659 - COMBINE (9/06-8/08)

06.593(01) CABLE HARNESS : 87742089

ссылка	Номер детали	Кол-во	Описание
	K029439588		SUPPORT, K29
	334588		TERMINAL,
	S003441166		TERMINAL, S3
	441167		TERMINAL,
	441159		CONNECTOR, WIRE,
	S01984607379		CONNECTOR, WIRE, S19
	334588		TERMINAL,
	S041441166		TERMINAL, S41
	441167		TERMINAL,
	441159		CONNECTOR, WIRE,
	S042426199		TERMINAL, S42
	S08284607379		CONNECTOR, WIRE, S82
	334588		TERMINAL,
	X002455780		TERMINAL, X2
	X003335483		TERMINAL, X3
	455780		TERMINAL,
	335482		TERMINAL,
	X00584400777		TAB, LOCKING, X5
	86500036		PIN, ELECT TERMINAL,
	84068583		PLUG,
	X00784400780		CONNECTOR, WIRE, X7
	86500036		PIN, ELECT TERMINAL,
	84068583		PLUG,
	X009334588		TERMINAL, X9
	919415		TERMINAL,
	441159		CONNECTOR, WIRE,
	X01084807216		CONNECTOR, WIRE, X10
	86500036		PIN, ELECT TERMINAL,
	84807672		CABLE TERMINAL,
	84807680		TAB, LOCKING,
	X01284400780		CONNECTOR, WIRE, X12
	86500036		PIN, ELECT TERMINAL,
	X02384074635		CONNECTOR, WIRE, X23
	86500036		PIN, ELECT TERMINAL,
	84074639		CONNECTOR, WIRE,
	X02484400772		CONNECTOR, WIRE, X24
	86500036		PIN, ELECT TERMINAL,
	84807672		CABLE TERMINAL,
	84068583		PLUG,
	X02684400777		TAB, LOCKING, X26
	86500036		PIN, ELECT TERMINAL,
	X03584074254		CONNECTOR, WIRE, X35
	86500035		TERMINAL,
	X04084400774		CONNECTOR, WIRE, X40

CSX7080 C659 - COMBINE (9/06-8/08)

06.593(01) CABLE HARNESS : 87742089

ссылка	Номер детали	Кол-во	Описание
	86500036		PIN, ELECT TERMINAL,
	84807672		CABLE TERMINAL,
	84068583		PLUG,
	X080441166		TERMINAL, X80
	441159		CONNECTOR, WIRE,
	X086335483		TERMINAL, X86
	455780		TERMINAL,
	84818184		CABLE TERMINAL,
	X087919415		TERMINAL, X87
	441159		CONNECTOR, WIRE,
	X1119811261		CONNECTOR, ELEC, X111
	9813989		TERMINAL,
	X1129811261		CONNECTOR, ELEC, X112
	9813989		TERMINAL,
	X1139811261		CONNECTOR, ELEC, X113
	9813989		TERMINAL,
	X1149811216		X114
	9813989		TERMINAL,
	X1159811216		X115
	9813989		TERMINAL,
	X116354118		TERMINAL, X116
	444853		
	X117354118		TERMINAL, X117
	335480		
	X118354118		TERMINAL, X118
	X119354118		TERMINAL, X119
	X14184058011		CONNECTOR, WIRE, X141
	86500036		PIN, ELECT TERMINAL,
	X14284058011		CONNECTOR, WIRE, X142
	86500036		PIN, ELECT TERMINAL,
	84068583		PLUG,
	X15984400774		CONNECTOR, WIRE, X159
	86500036		PIN, ELECT TERMINAL,
	84807672		CABLE TERMINAL,
	84068583		PLUG,
	X16084400777		TAB, LOCKING, X160
	86500036		PIN, ELECT TERMINAL,
	84068583		PLUG,
	X16184400780		CONNECTOR, WIRE, X161
	86500036		PIN, ELECT TERMINAL,
	X16284400772		CONNECTOR, WIRE, X162
	86500036		PIN, ELECT TERMINAL,
	84807672		CABLE TERMINAL,
	84068583		PLUG,

CSX7080 C659 - COMBINE (9/06-8/08)

06.593(01) CABLE HARNESS : 87742089

ссылка	Номер детали	Кол-во	Описание
	X16384400777		TAB, LOCKING, X163
	86500036		PIN, ELECT TERMINAL,
	84068583		PLUG,
	X1909811261		CONNECTOR, ELEC, X190
	9813989		TERMINAL,
	X191354118		TERMINAL, X191
	X192354118		TERMINAL, X192
	X193354118		TERMINAL, X193
	X1949505300		CONNECTOR, WIRE, X194
	9506052		TERMINAL,
	Y20184806918		CONNECTOR, WIRE,
	84806919		PLUG,

06.593(02) CABLE HARNESS : 87742089

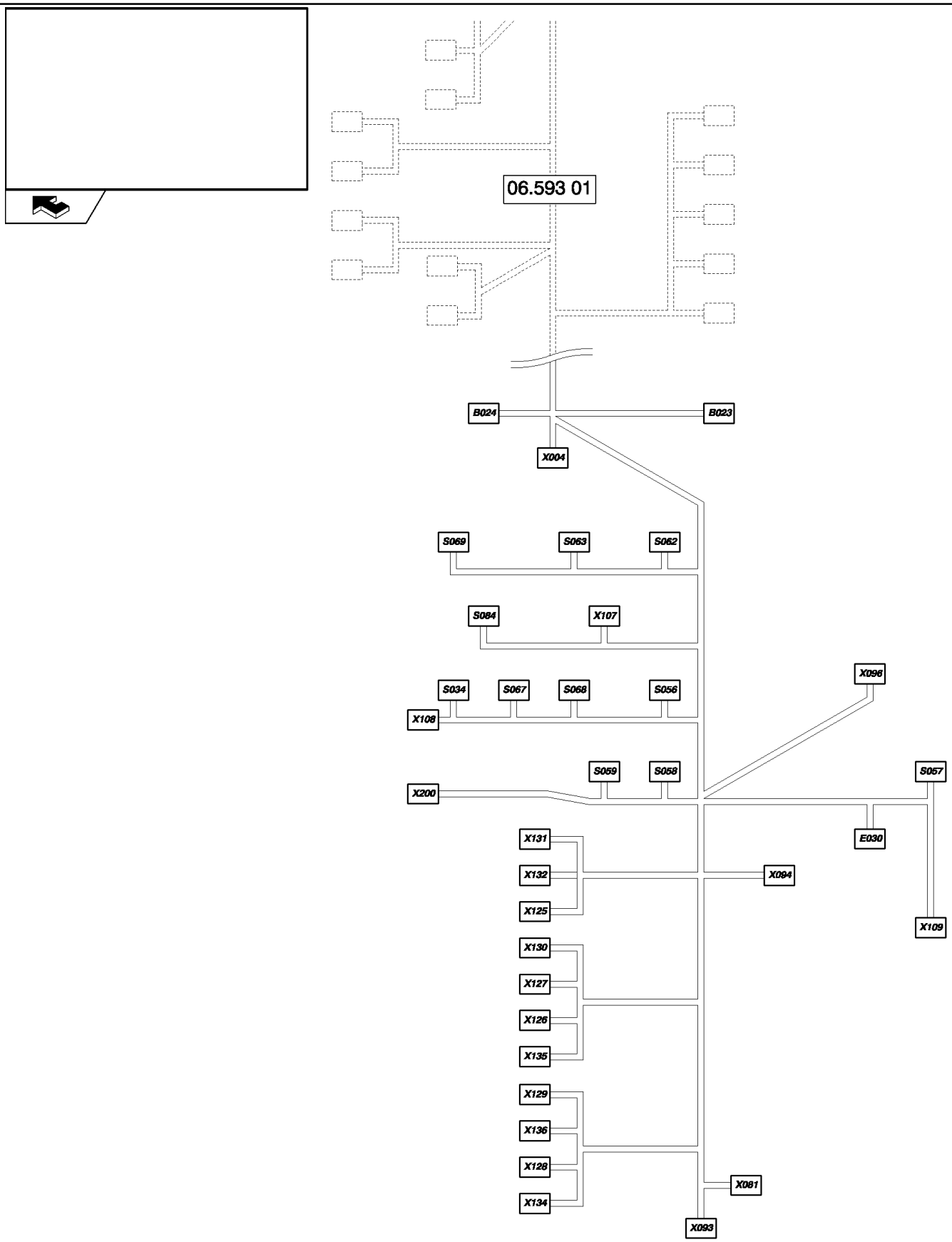

CSX7080 C659 - COMBINE (9/06-8/08)

06.593(02) CABLE HARNESS : 87742089

ссылка	Номер детали	Кол-во	Описание
	B02384462251		B23
	430026		TERMINAL,
	350674		CONNECTOR, WIRE,
	B02484462251		B24
	430026		TERMINAL,
	350674		CONNECTOR, WIRE,
	E030441166		TERMINAL, E30
	441167		TERMINAL,
	919415		TERMINAL,
	441159		CONNECTOR, WIRE,
	S03484607379		CONNECTOR, WIRE, S34
	334588		TERMINAL,
	334594		TERMINAL,
	S05684607379		CONNECTOR, WIRE, S56
	334588		TERMINAL,
	334594		TERMINAL,
	S057441166		TERMINAL, S57
	441159		CONNECTOR, WIRE,
	S05884607379		CONNECTOR, WIRE, S58
	334588		TERMINAL,
	334594		TERMINAL,
	S05984607379		CONNECTOR, WIRE, S59
	334588		TERMINAL,
	334594		TERMINAL,
	S06284807268		CONNECTOR, WIRE, S62
	84807270		CABLE TERMINAL,
	84807269		CONNECTOR, WIRE,
	S06384607379		CONNECTOR, WIRE, S63
	334588		TERMINAL,
	334594		TERMINAL,
	S06784607379		CONNECTOR, WIRE, S67
	334588		TERMINAL,
	334594		TERMINAL,
	S06884607379		CONNECTOR, WIRE, S68
	334588		TERMINAL,
	334594		TERMINAL,
	S06984607379		CONNECTOR, WIRE, S69
	334588		TERMINAL,
	334594		TERMINAL,
	S08487351127		S84
	441166		TERMINAL,
	441159		CONNECTOR, WIRE,
	87351119		
	X00484818192		CONNECTOR, ELEC, X4

CSX7080 C659 - COMBINE (9/06-8/08)

06.593(02) CABLE HARNESS : 87742089

ссылка	Номер детали	Кол-во	Описание
	NS		NOT SERVICED,
	X081447569		CONNECTOR, WIRE, X81
	NS		NOT SERVICED,
	X09384074631		CONNECTOR, WIRE, X93
	84074638		PLUG,
	86500036		PIN, ELECT TERMINAL,
	X09484400775		CONNECTOR, WIRE, X94
	86500035		TERMINAL,
	84068583		PLUG,
	X096335483		TERMINAL, X96
	455780		TERMINAL,
	84818184		CABLE TERMINAL,
	X107334595		TERMINAL, X107
	334588		TERMINAL,
	X108446133		CONNECTOR, ELEC, X108
	441166		TERMINAL,
	919415		TERMINAL,
	X10984007631		TERMINAL, X109
	430026		TERMINAL,
	X1259505300		CONNECTOR, WIRE, X125
	9506052		TERMINAL,
	9506053		TERMINAL,
	X1269505300		CONNECTOR, WIRE, X126
	9506052		TERMINAL,
	9506053		TERMINAL,
	X1279505300		CONNECTOR, WIRE, X127
	9506052		TERMINAL,
	X1289505300		CONNECTOR, WIRE, X128
	9506052		TERMINAL,
	9506053		TERMINAL,
	X1299505300		CONNECTOR, WIRE, X129
	9506052		TERMINAL,
	X1309505300		CONNECTOR, WIRE, X130
	9506052		TERMINAL,
	9506053		TERMINAL,
	X1319505300		CONNECTOR, WIRE, X131
	9506052		TERMINAL,
	9506053		TERMINAL,
	X1329505300		CONNECTOR, WIRE, X132
	9506052		TERMINAL,
	9506053		TERMINAL,
	X134354118		TERMINAL, X134
	X135354118		TERMINAL, X135
	X136354118		TERMINAL, X136

CSX7080 C659 - COMBINE (9/06-8/08)

06.593(02) CABLE HARNESS : 87742089

ссылка	Номер детали	Кол-во	Описание
X200	446133		CONNECTOR, ELEC, X200
	441166		TERMINAL,

06.701(01) CONNECTORS FOR COMPONENTS

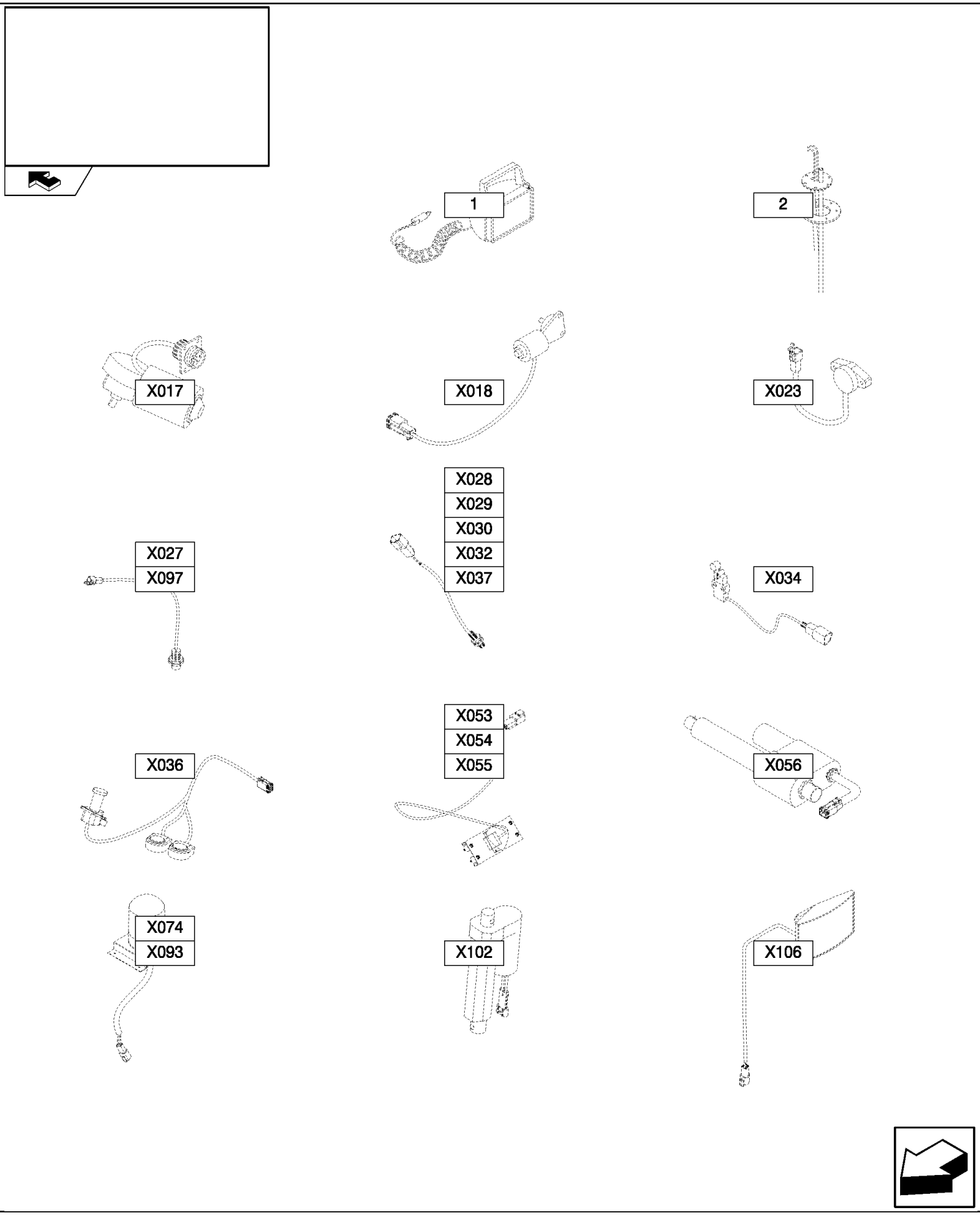

ссылка	Номер детали	Кол-во	Описание
1	350674		CONNECTOR, WIRE,
	430026		TERMINAL,
2	84074630		CONNECTOR, WIRE,
	86500166		PLUG,
X017445746			CONNECTOR, WIRE, X17
	80445526		COLLAR,
	445517		TERMINAL,
X01884806458			CONNECTOR, WIRE, X18
X02384074632			CONNECTOR, WIRE, X23
	86500035		TERMINAL,
	9611173		PLUG,
X02784074630			CONNECTOR, WIRE, X27
	86500035		TERMINAL,
	86500166		PLUG,
X02884074630			CONNECTOR, WIRE, X28
	86500035		TERMINAL,
	86500166		PLUG,
X02984074630			CONNECTOR, WIRE, X29
	86500035		TERMINAL,
	86500166		PLUG,
X03084074630			CONNECTOR, WIRE, X30
	86500035		TERMINAL,
	86500166		PLUG,
X03284074630			CONNECTOR, WIRE, X32
	86500035		TERMINAL,
	86500166		PLUG,
X03484074632			CONNECTOR, WIRE, X34
	86500035		TERMINAL,
	9611173		PLUG,
X03684074642			CONNECTOR, WIRE, X36
	84068583		PLUG,
	86500035		TERMINAL,
	89861378		PLUG,
X03784074630			CONNECTOR, WIRE, X37
	86500035		TERMINAL,
	86500166		PLUG,
X05384074630			CONNECTOR, WIRE, X53
	86500035		TERMINAL,
	86500166		PLUG,
X05484074630			CONNECTOR, WIRE, X54
	86500035		TERMINAL,
	86500166		PLUG,
X05584074630			CONNECTOR, WIRE, X55
	86500035		TERMINAL,

06.701(01) CONNECTORS FOR COMPONENTS

ссылка	Номер детали	Кол-во	Описание
	86500166		PLUG,
	X056916790		CONNECTOR, WIRE, X56
	445521		TERMINAL,
	9516242		TERMINAL,
	916797		GASKET,
	X07484074630		CONNECTOR, WIRE, X74
	86500035		TERMINAL,
	86500167		
	X09384074630		CONNECTOR, WIRE, X93
	86500035		TERMINAL,
	86500167		
	X09784074630		CONNECTOR, WIRE, X97
	86500035		TERMINAL,
	86500166		PLUG,
	X10284100538		CONNECTOR, WIRE, X102
	84806458		CONNECTOR, WIRE,
	X10684074632		CONNECTOR, WIRE, X106
	900363		TERMINAL,
	9611173		PLUG,

06.801(01) CONNECTORS - FROM 80334588 TO 80445521

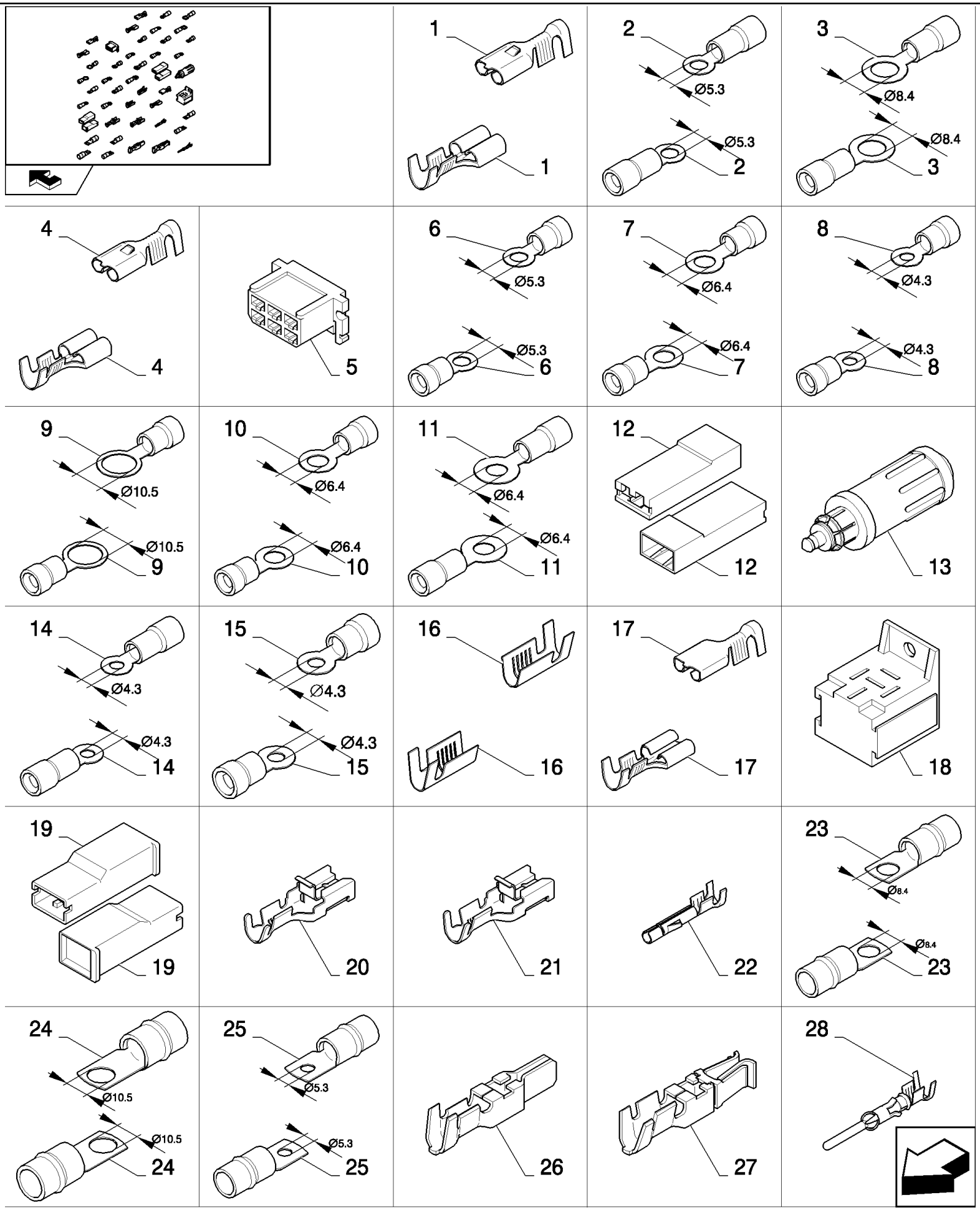

CSX7080 C659 - COMBINE (9/06-8/08)

06.801(01) CONNECTORS - FROM 80334588 TO 80445521

ссылка	Номер детали	Кол-во	Описание
1	334588	AR	TERMINAL, 1-2.5MMI
2	80334591	AR	TERMINAL, 4-6MMI
3	80334592	AR	TERMINAL CONNECTOR, 4-6MMI
4	334594	AR	TERMINAL, 4-6MMI
5	334595	AR	TERMINAL,
6	334787	AR	CABLE TERMINAL, 1.5-2.5MMI
7	335316	AR	TERMINAL, 0.3-1.3MMI
8	80335480	AR	TERMINAL, 1.5-2.5MMI
9	335481	AR	TERMINAL, 1.5-2.5MMI
10	335482	AR	TERMINAL, 1.5-2.5MMI
11	335483	AR	TERMINAL, 4-6MMI
12	350674	AR	CONNECTOR, WIRE,
13	353969	AR	CONNECTOR, ELEC,
14	80354118	AR	TERMINAL, 4-6MMI
15	80357472	AR	TERMINAL, 0.3-1.3MMI
16	426199	AR	TERMINAL, 1.5-2.5MMI
17	430026	AR	TERMINAL, 1.5-2.5MMI
18	439588	AR	SUPPORT,
19	441159	AR	CONNECTOR, WIRE,
20	441166	AR	TERMINAL, 0.7-2MMI
21	441167	AR	TERMINAL, 2.5-4MMI
22	442243	AR	CONNECTOR, ELEC, 0.5-2.1MMI
23	80444851	AR	TERMINAL, 16-20MMI
24	80444852	AR	TERMINAL, 16-20MMI
25	80444853	AR	CABLE TERMINAL, 16-20MMI
26	445517	AR	TERMINAL, 1.5-4MMI
27	445518	AR	TERMINAL, 5-8MMI
28	445521	AR	TERMINAL, 1-2.5MMI

06.801(02) CONNECTORS - FROM 80445522 TO 84058194

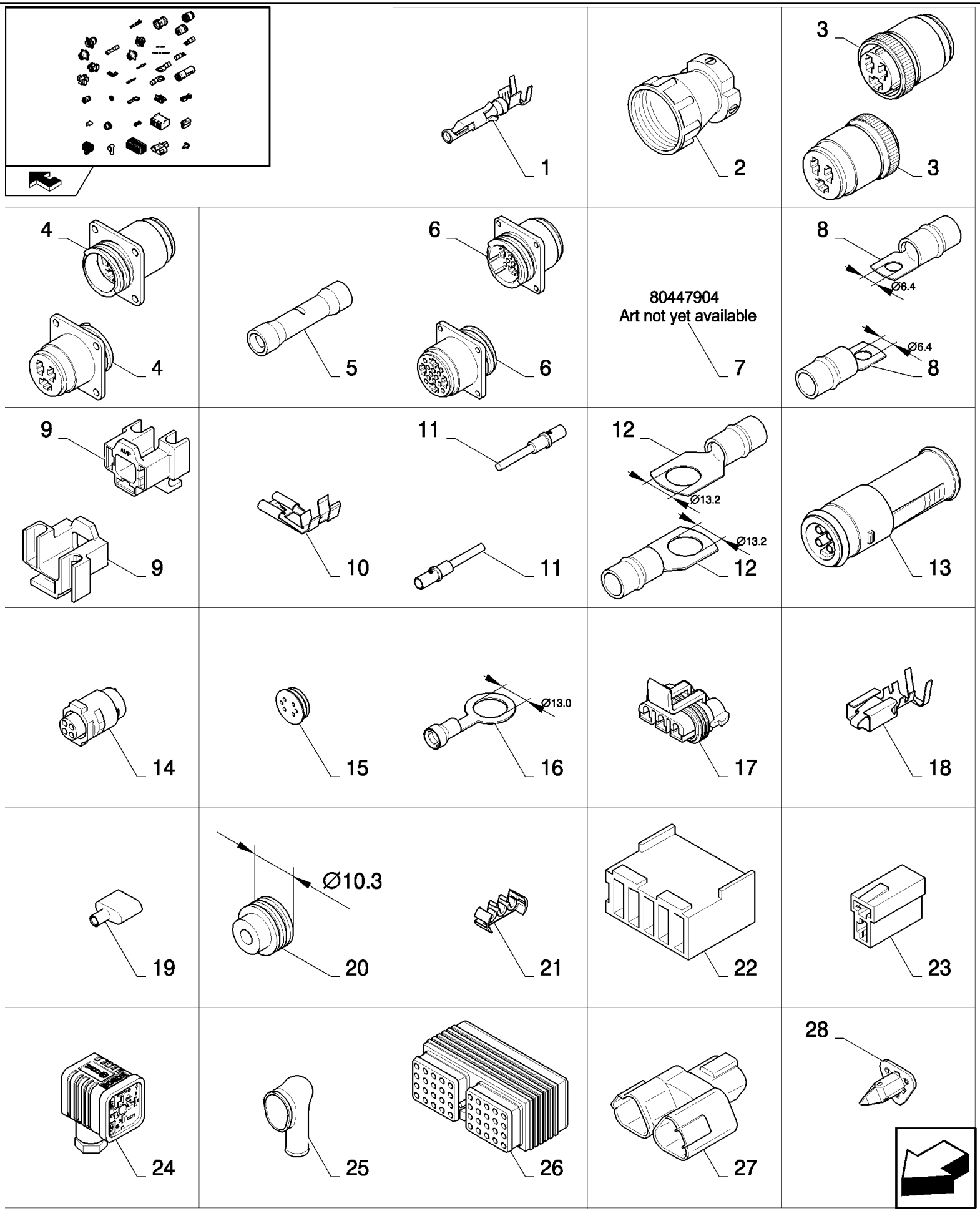

CSX7080 C659 - COMBINE (9/06-8/08)

06.801(02) CONNECTORS - FROM 80445522 TO 84058194

ссылка	Номер детали	Кол-во	Описание
1	445522	AR	TERMINAL, 1-2.5MMI
2	80445526	AR	COLLAR,
3	80445745	AR	CONNECTOR, WIRE,
4	445746	AR	CONNECTOR, WIRE,
5	80446236	AR	CABLE TERMINAL, 0.5-1.5MMI
6	447569	AR	CONNECTOR, WIRE,
7	80447904	AR	CONNECTOR, WIRE,
8	455780	AR	TERMINAL, 16-20MMI
9	751307	AR	TERMINAL,
10	751308	AR	TERMINAL,
11	900363	AR	TERMINAL, 0.8-1MMI
12	80916171	AR	CABLE TERMINAL, 16-20MMI
13	916790	AR	CONNECTOR, WIRE, 4P-M
14	916791	AR	CONNECTOR, WIRE, 4P-V
15	916797	AR	GASKET,
16	80919749	AR	CABLE TERMINAL, 2.5-6MMI
17	84000181	AR	TERMINAL,
18	84000182	AR	TERMINAL, 1-2MMI
19	84004134	AR	TERMINAL,
20	84004255	AR	SEAL, 2.81-3.75MMI
21	84004256	AR	CLAMP,
22	84007631	AR	TERMINAL,
23	84015523	AR	CONNECTOR, ELEC,
24	84019407	AR	CONNECTOR, HYD.,
25	84038072	AR	CABLE,
26	84058011	AR	CONNECTOR, WIRE,
27	84058188	AR	CONNECTOR, WIRE,
28	84058194	AR	PLUG,

06.801(03) CONNECTORS - FROM 84068583 TO 84400774

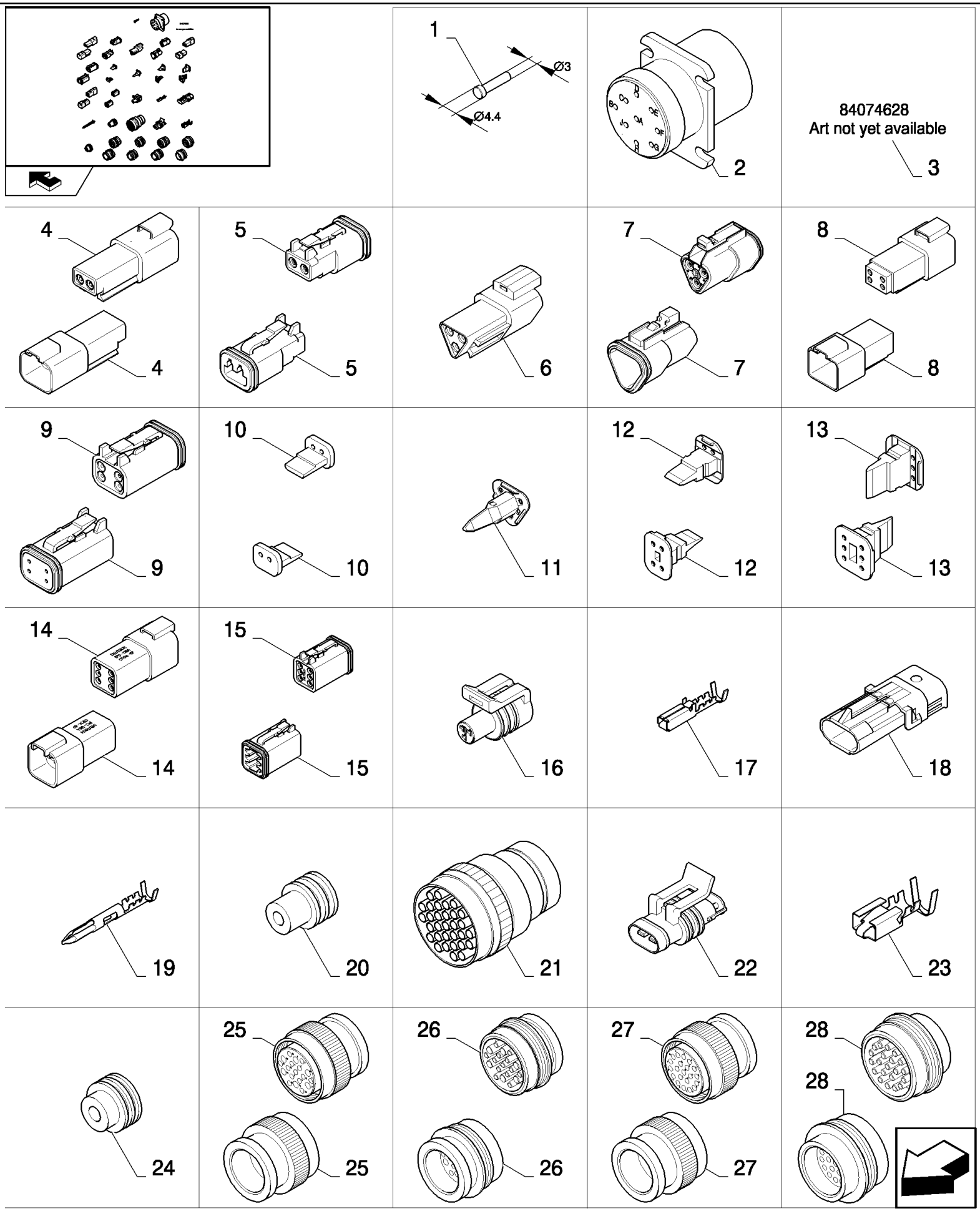

CSX7080 C659 - COMBINE (9/06-8/08)

06.801(03) CONNECTORS - FROM 84068583 TO 84400774

ссылка	Номер детали	Кол-во	Описание
1	84068583	AR	PLUG,
2	84074254	AR	CONNECTOR, WIRE,
3	84074628	AR	CABLE TERMINAL,
4	84074630	AR	CONNECTOR, WIRE, 0.82-1.31MMI
5	84074631	AR	CONNECTOR, WIRE,
6	84074632	AR	CONNECTOR, WIRE,
7	84074635	AR	CONNECTOR, WIRE,
8	84074636	AR	CONNECTOR, WIRE,
9	84074637	AR	CONNECTOR, WIRE,
10	84074638	AR	PLUG,
11	84074639	AR	CONNECTOR, WIRE,
12	84074640	AR	PLUG,
13	84074641	AR	PLUG,
14	84074642	AR	CONNECTOR, WIRE,
15	84074643	AR	CONNECTOR, WIRE,
16	84078681	AR	CONNECTOR, WIRE, 2.03-2.4MMI
17	84078682	AR	TERMINAL, 0.8-1MMI
18	84100536	AR	CONNECTOR, WIRE,
19	84100537	AR	TERMINAL, 1-2MMI
20	84100538	AR	CONNECTOR, WIRE, 3.49-2.81MMI
21	84320884	AR	CONNECTOR, ELEC,
22	84400439	AR	CONNECTOR, WIRE,
23	84400440	AR	CONNECTOR, WIRE,
24	84400441	AR	PLUG,
25	84400771	AR	CONNECTOR, WIRE,
26	84400772	AR	CONNECTOR, WIRE,
27	84400773	AR	CONNECTOR, WIRE,
28	84400774	AR	CONNECTOR, WIRE,

06.801(04) CONNECTORS - FROM 84400775 TO 84806918

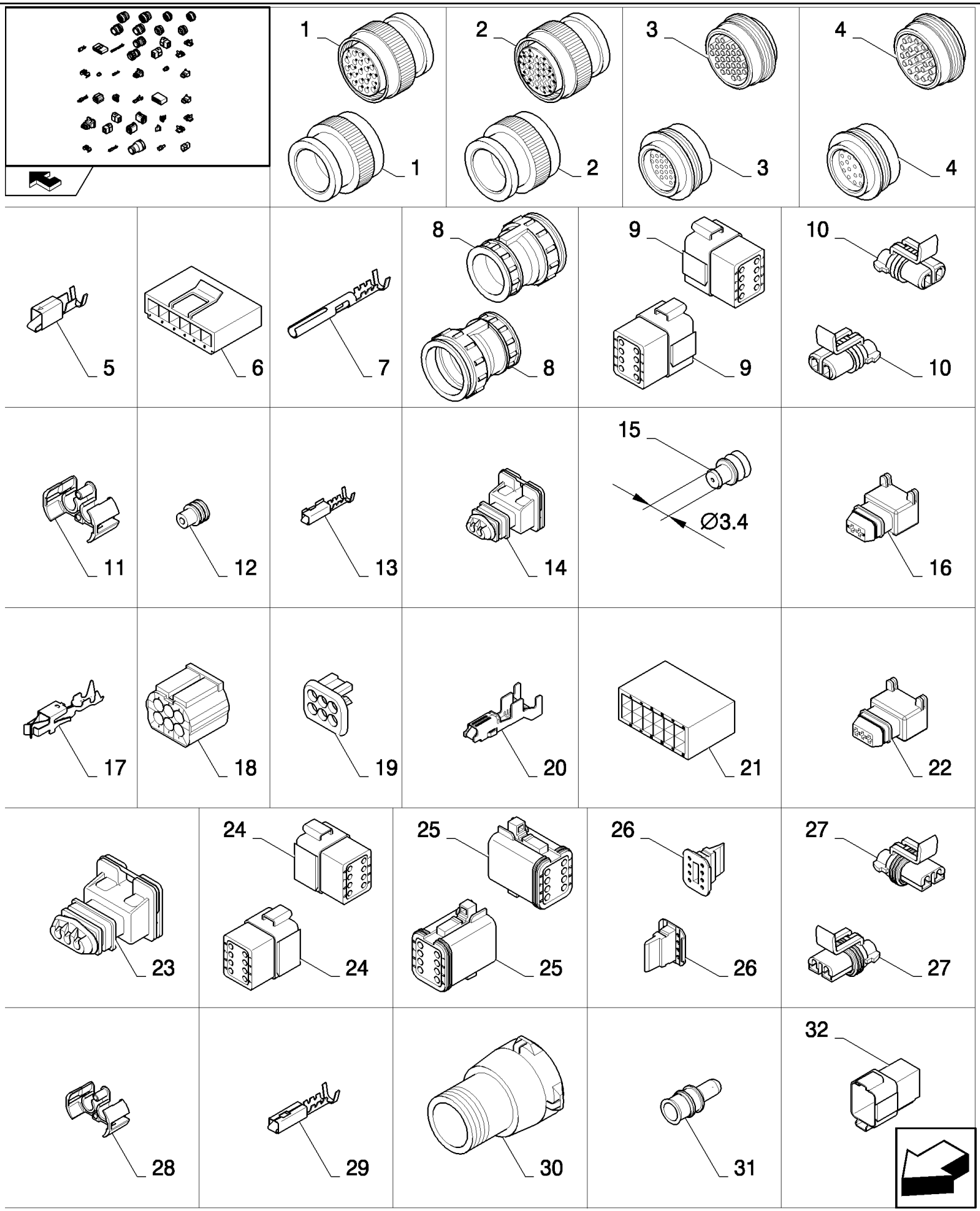

CSX7080 C659 - COMBINE (9/06-8/08)

06.801(04) CONNECTORS - FROM 84400775 TO 84806918

ссылка	Номер детали	Кол-во	Описание
1	84400775	AR	CONNECTOR, WIRE,
2	84400776	AR	CONNECTOR, WIRE,
3	84400777	AR	TAB, LOCKING,
4	84400780	AR	CONNECTOR, WIRE,
5	84439475	AR	CONNECTOR, WIRE,
6	84439476	AR	CONNECTOR, WIRE,
7	84441696	AR	CONNECTOR, WIRE, 1-2MMI
8	84441874	AR	CONNECTOR, WIRE,
9	84449647	AR	CONNECTOR, WIRE,
10	84457868	AR	CONNECTOR, WIRE,
11	84457870	AR	PLUG,
12	84457871	AR	SEAL,
13	84457872	AR	CABLE TERMINAL,
14	84607213	AR	CONNECTOR, WIRE,
15	84607242	AR	SEAL,
16	84607243	AR	CONNECTOR, WIRE,
17	84607244	AR	TERMINAL,
18	84607372	AR	CONNECTOR, WIRE,
19	84607373	AR	STOP DEVICE,
20	84607374	AR	CONNECTOR, WIRE,
21	84607379	AR	CONNECTOR, WIRE,
22	84806090	AR	CONNECTOR, WIRE,
23	84806091	AR	CONNECTOR, WIRE,
24	84806208	AR	CONNECTOR, WIRE,
25	84806311	AR	CONNECTOR, WIRE,
26	84806312	AR	CONNECTOR, WIRE,
27	84806457	AR	CONNECTOR, WIRE,
28	84806458	AR	CONNECTOR, WIRE,
29	84806460	AR	CABLE TERMINAL, 2-3MMI
30	84806654	AR	CONNECTOR, WIRE,
31	84806656	AR	CABLE TERMINAL,
32	84806918	AR	CONNECTOR, WIRE,

06.801(05) CONNECTORS - FROM 84806919 TO 84814865

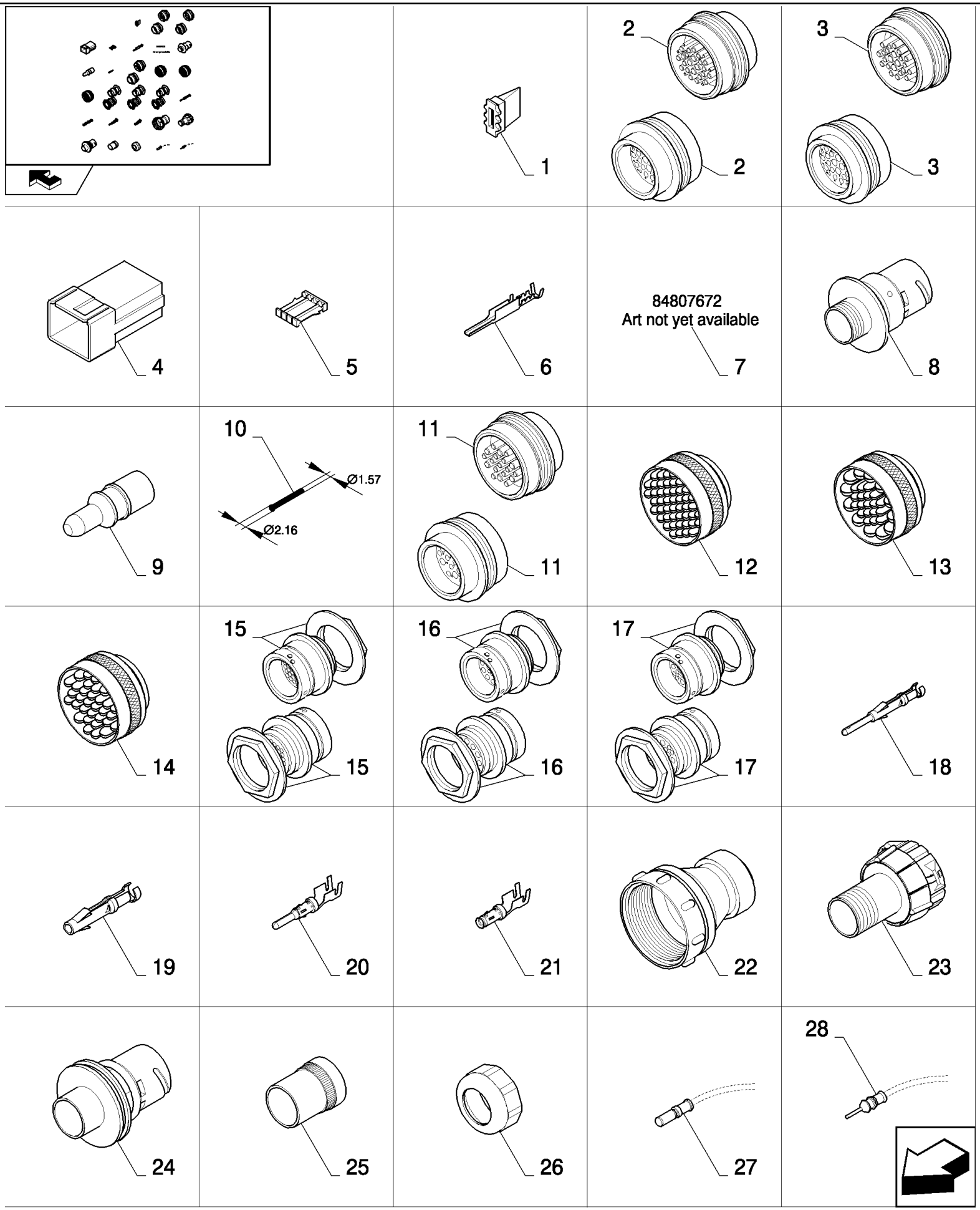

CSX7080 C659 - COMBINE (9/06-8/08)

06.801(05) CONNECTORS - FROM 84806919 TO 84814865

ссылка	Номер детали	Кол-во	Описание
1	84806919	AR	PLUG,
2	84807216	AR	CONNECTOR, WIRE,
3	84807217	AR	CONNECTOR, WIRE,
4	84807268	AR	CONNECTOR, WIRE,
5	84807269	AR	CONNECTOR, WIRE,
6	84807270	AR	CABLE TERMINAL, 0.8-1MMI
7	84807672	AR	CABLE TERMINAL,
8	84807676	AR	CONNECTOR, WIRE,
9	84807678	AR	CABLE TERMINAL,
10	84807680	AR	TAB, LOCKING,
11	84814753	AR	CONNECTOR, WIRE,
12	84814754	AR	CONNECTOR, WIRE,
13	84814755	AR	CONNECTOR, WIRE,
14	84814756	AR	CONNECTOR, WIRE,
15	84814757	AR	CONNECTOR, WIRE,
16	84814758	AR	CONNECTOR, WIRE,
17	84814759	AR	CONNECTOR, WIRE,
18	84814761	AR	CABLE TERMINAL,
19	84814762	AR	CABLE TERMINAL,
20	84814763	AR	CABLE TERMINAL, 1.5-2.5MMI
21	84814764	AR	CABLE TERMINAL,
22	84814765	AR	ADAPTER,
23	84814773	AR	CONNECTOR, WIRE,
24	84814774	AR	CONNECTOR, WIRE,
25	84814862	AR	CONNECTOR, WIRE,
26	84814863	AR	CONNECTOR, WIRE,
27	84814864	AR	CABLE TERMINAL,
28	84814865	AR	CABLE TERMINAL,

06.801(06) CONNECTORS - FROM 84814866 TO 89818033

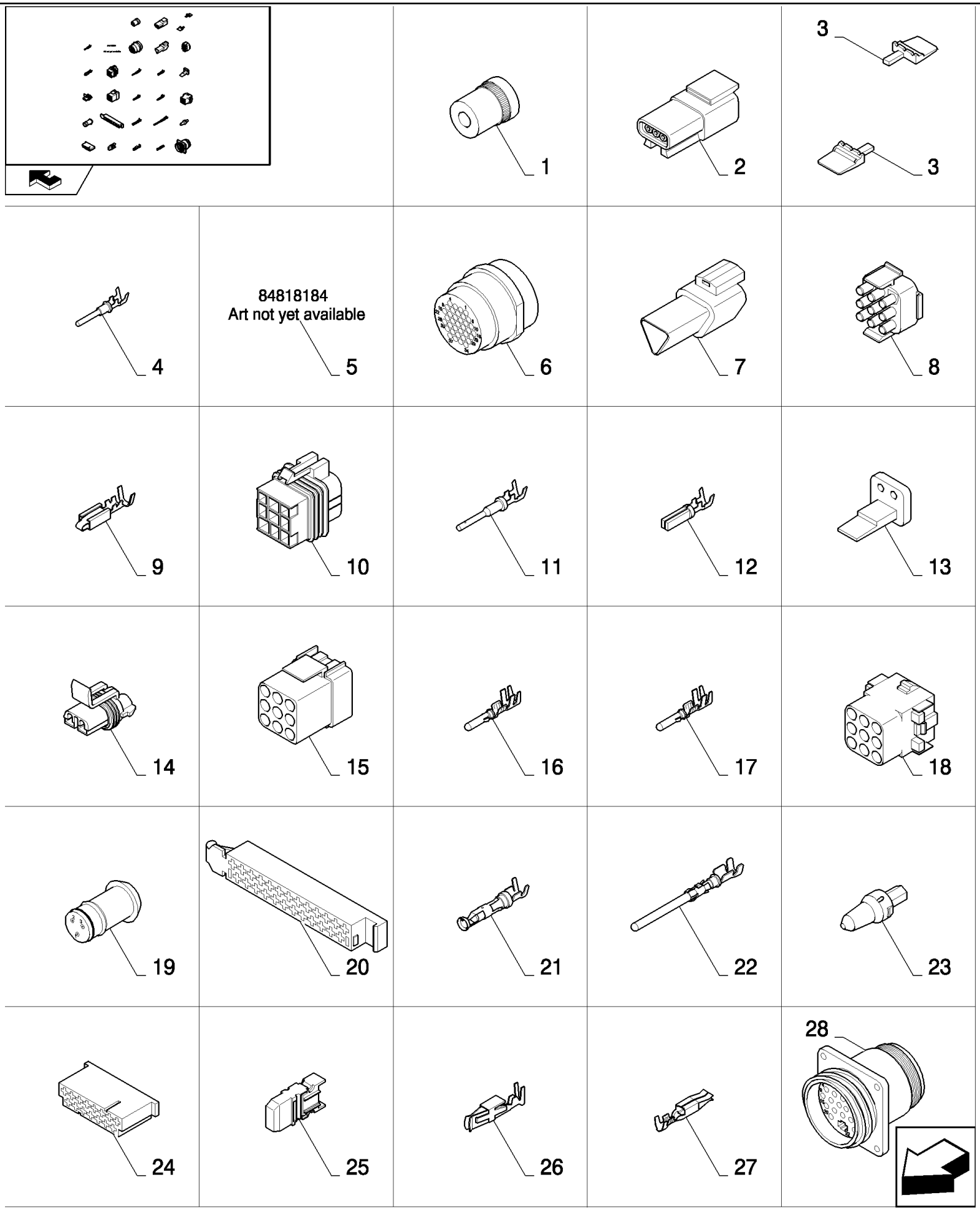

CSX7080 C659 - COMBINE (9/06-8/08)

06.801(06) CONNECTORS - FROM 84814866 TO 89818033

ссылка	Номер детали	Кол-во	Описание
1	84814866	AR	CONNECTOR, WIRE,
2	84817101	AR	CONNECTOR, WIRE,
3	84817102	AR	TAB, LOCKING,
4	84817103	AR	CABLE TERMINAL, 0.8-1MMI
5	84818184	AR	CABLE TERMINAL,
6	84818192	AR	CONNECTOR, ELEC,
7	84818205	AR	CONNECTOR, WIRE,
8	84818419	AR	CONNECTOR, WIRE,
9	84819793	AR	CABLE TERMINAL, 1-2MMI
10	84819794	AR	CONNECTOR, WIRE,
11	86500035	AR	TERMINAL, 0.82-1.31MMI
12	86500036	AR	PIN, ELECT TERMINAL, 0.8-1MMI
13	86500166	AR	PLUG,
14	86611284	AR	CONNECTOR, WIRE,
15	89505300	AR	CONNECTOR, ELEC,
16	89506052	AR	CABLE, 0.5-2MMI
17	89506053	AR	TERMINAL, 2.1-4MMI
18	9509740	AR	CONNECTOR, ELEC,
19	9510662	AR	CONNECTOR, WIRE, 2.3-3MMI
20	9510666	AR	CONNECTOR, WIRE,
21	9513123	AR	TERMINAL, 0.5-1.5MMI
22	9516242	AR	TERMINAL, 0.5-1.5MMI
23	9611173	AR	PLUG,
24	9811261	AR	CONNECTOR, ELEC,
25	9811772	AR	FUSE HOLDER,
26	9813989	AR	TERMINAL, 1-2.5MMI
27	9815256	AR	CONNECTOR, ELEC, 0.5-1.5MMI
28	9818033	AR	CONNECTOR, WIRE,

06.801(07) CONNECTORS - FROM 89818548 TO 89861378

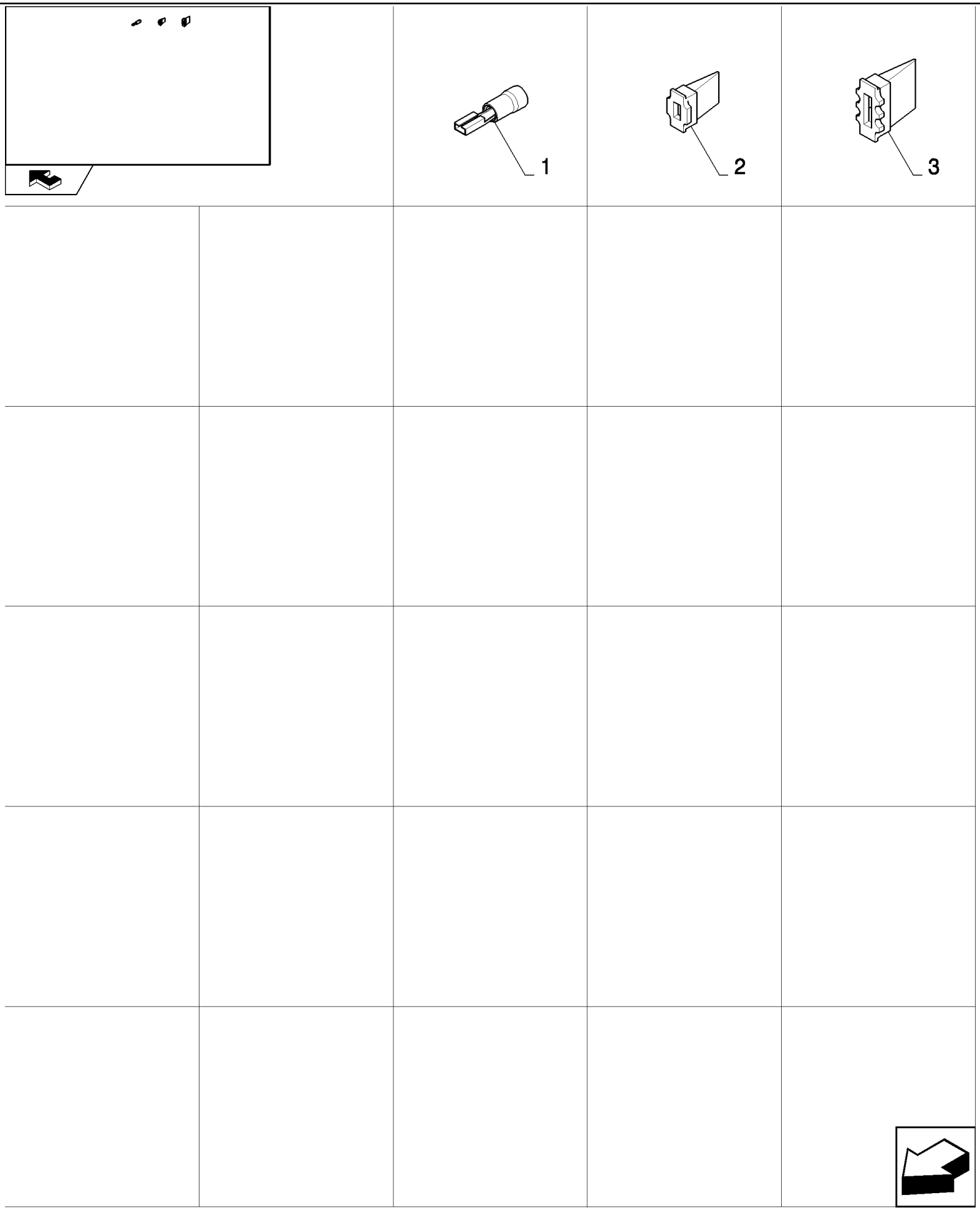

CSX7080 C659 - COMBINE (9/06-8/08)

06.801(07) CONNECTORS - FROM 89818548 TO 89861378

ссылка	Номер детали	Кол-во	Описание
1	9818548	AR	TERMINAL, 0.3-1.5MMI
2	9861376	AR	CONNECTOR, WIRE,
3	89861378	AR	PLUG,

HYDRAULIC SYSTEMS	**INSTALLATION HYDRAULIQUE**	**INSTALACIÓN HIDRÁULICA**	**HYDRAULIKANLÆG**
IMPIANTO IDRAULICA	**HYDRAULISCHE ANLAGE**	**INSTÁLAÇION HIDRÁULICA**	**HYDRAULISCH SYSTEEM**

SEC. 7

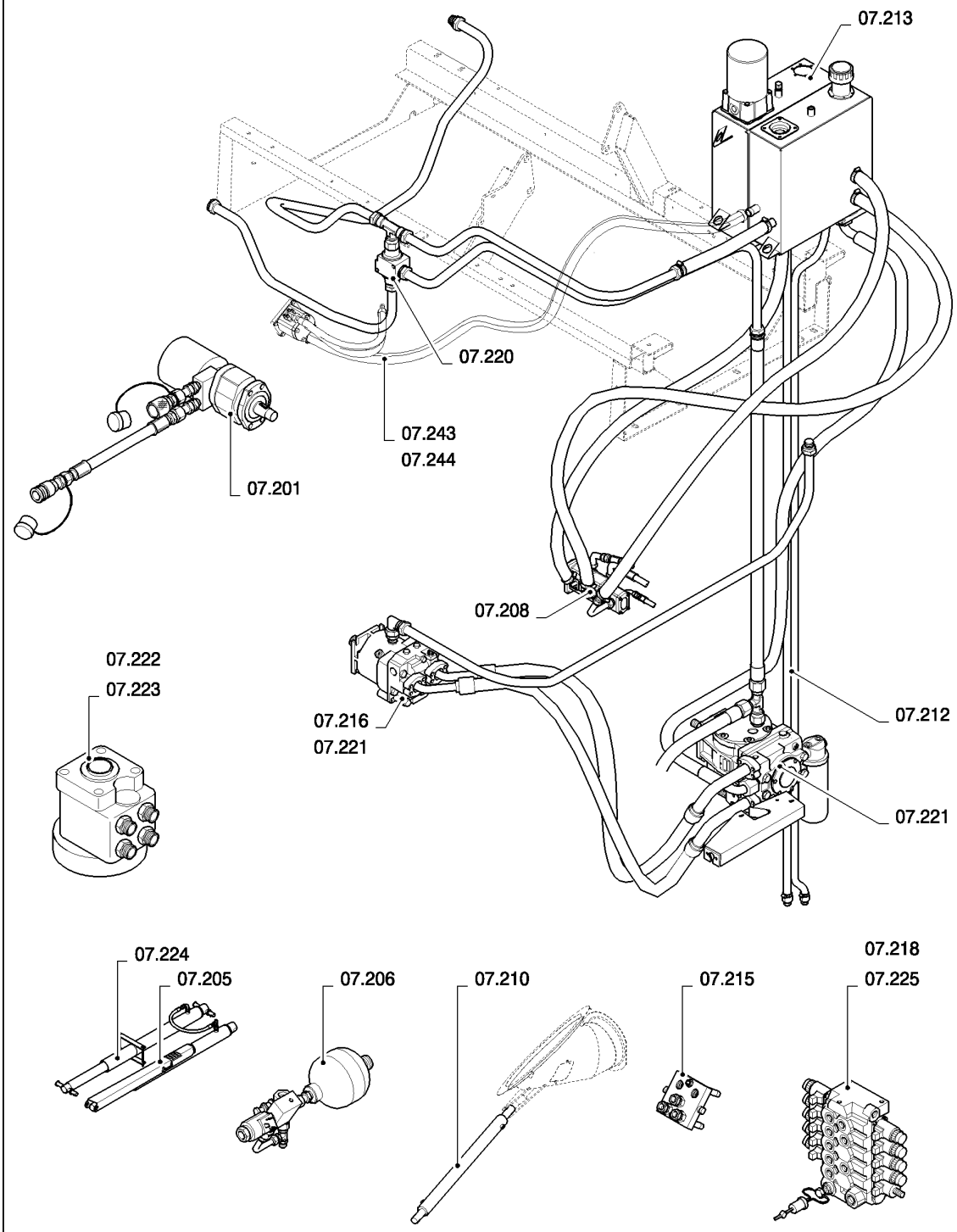

ссылка	Номер детали	Кол-во	Описание

HYDRAULIC SYSTEMS	**INSTALLATION HYDRAULIQUE**	**INSTALACIÓN HIDRÁULICA**	**HYDRAULIKANLÆG**
IMPIANTO IDRAULICA	**HYDRAULISCHE ANLAGE**	**INSTÁLAÇION HIDRÁULICA**	**HYDRAULISCH SYSTEEM**

SEC. 7

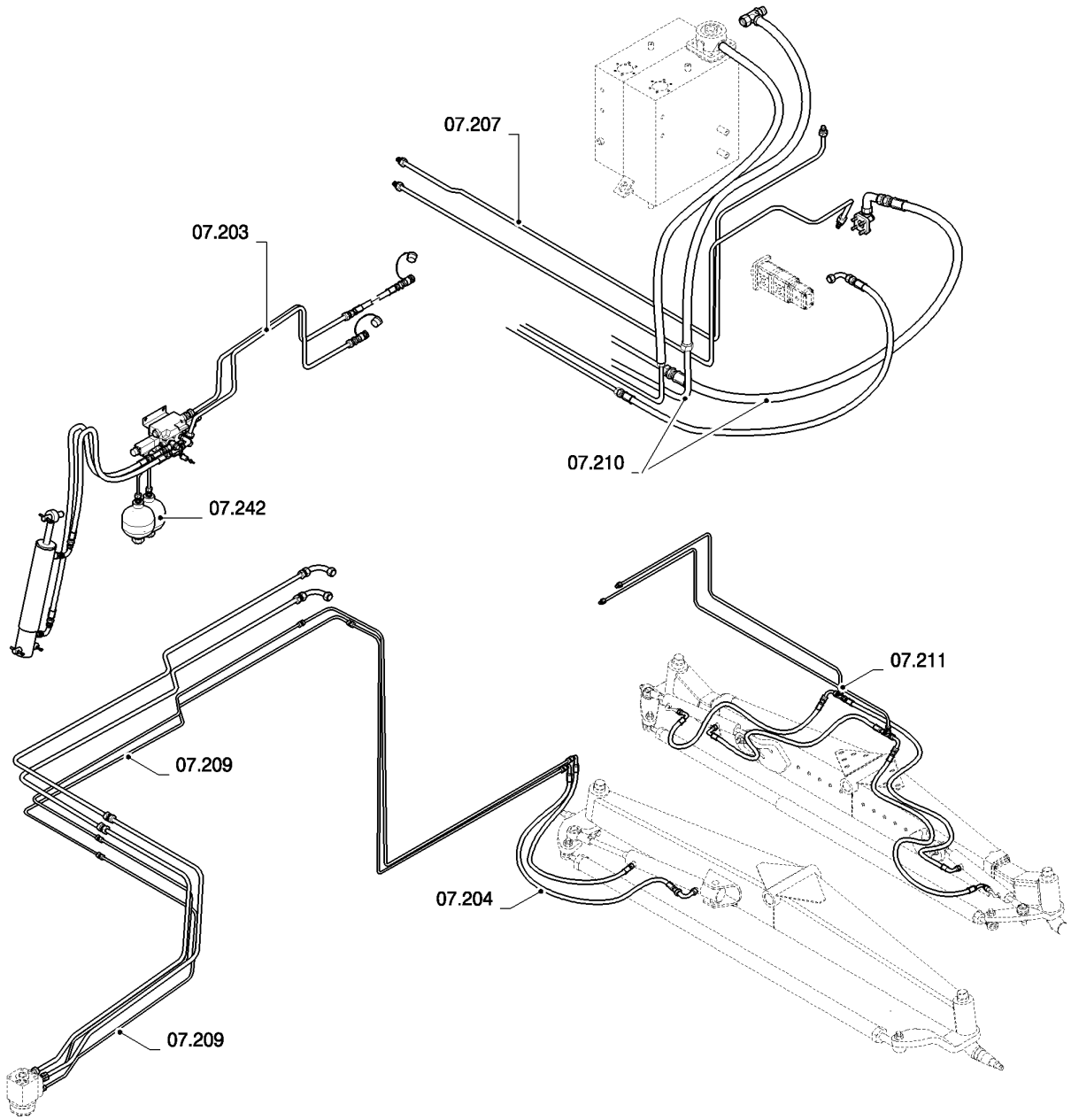

ссылка	Номер детали	Кол-во	Описание

HYDRAULIC SYSTEMS | **INSTALLATION HYDRAULIQUE** | **INSTALACIÓN HIDRÁULICA** | **HYDRAULIKANLÆG**

IMPIANTO IDRAULICA | **HYDRAULISCHE ANLAGE** | **INSTÁLAÇION HIDRÁULICA** | **HYDRAULISCH SYSTEEM**

SEC. 7

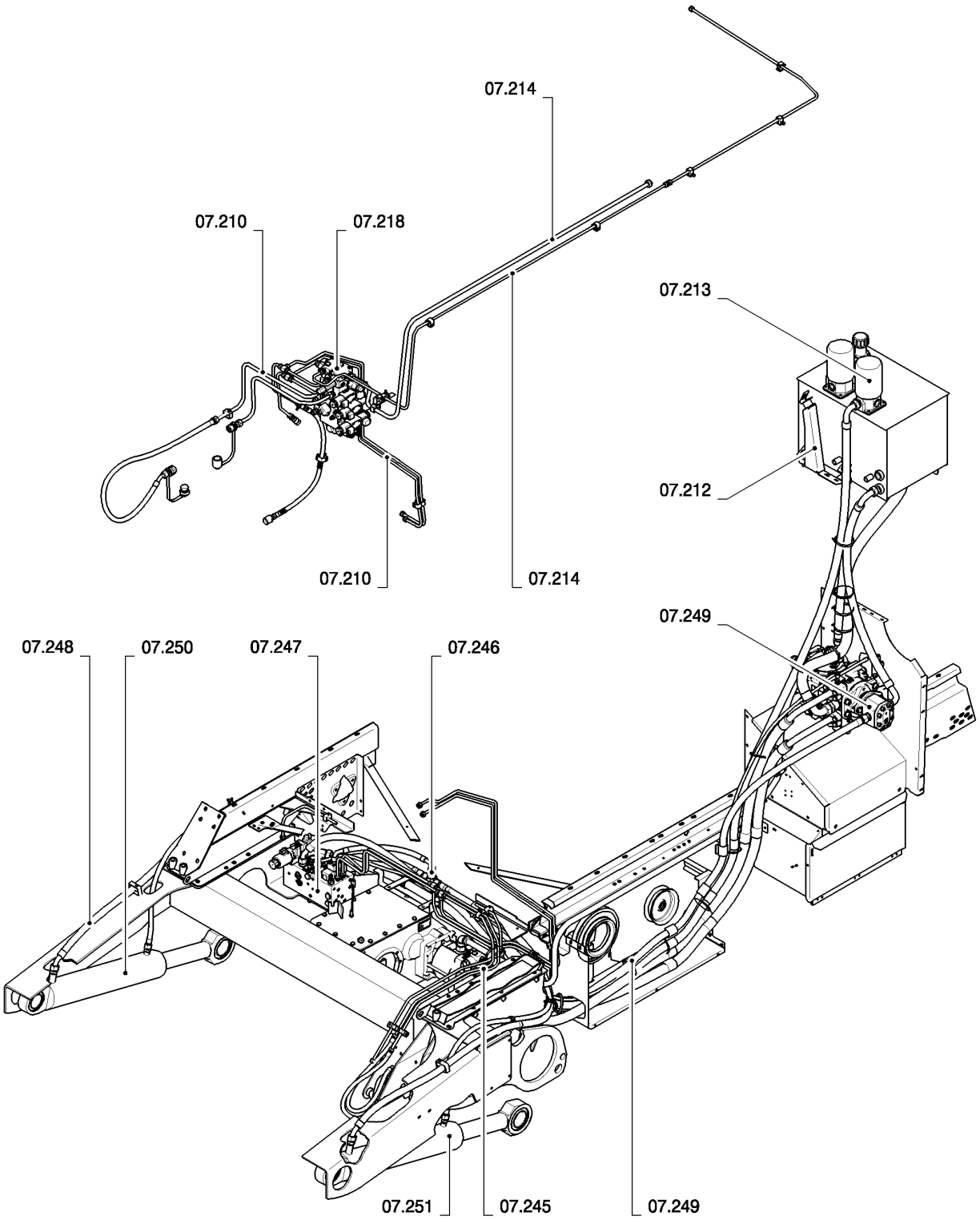

ссылка	Номер детали	Кол-во	Описание

07.201(01) HYDRAULIC DRIVEN REVERSING SYSTEM

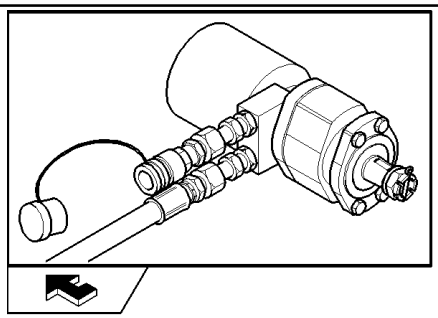

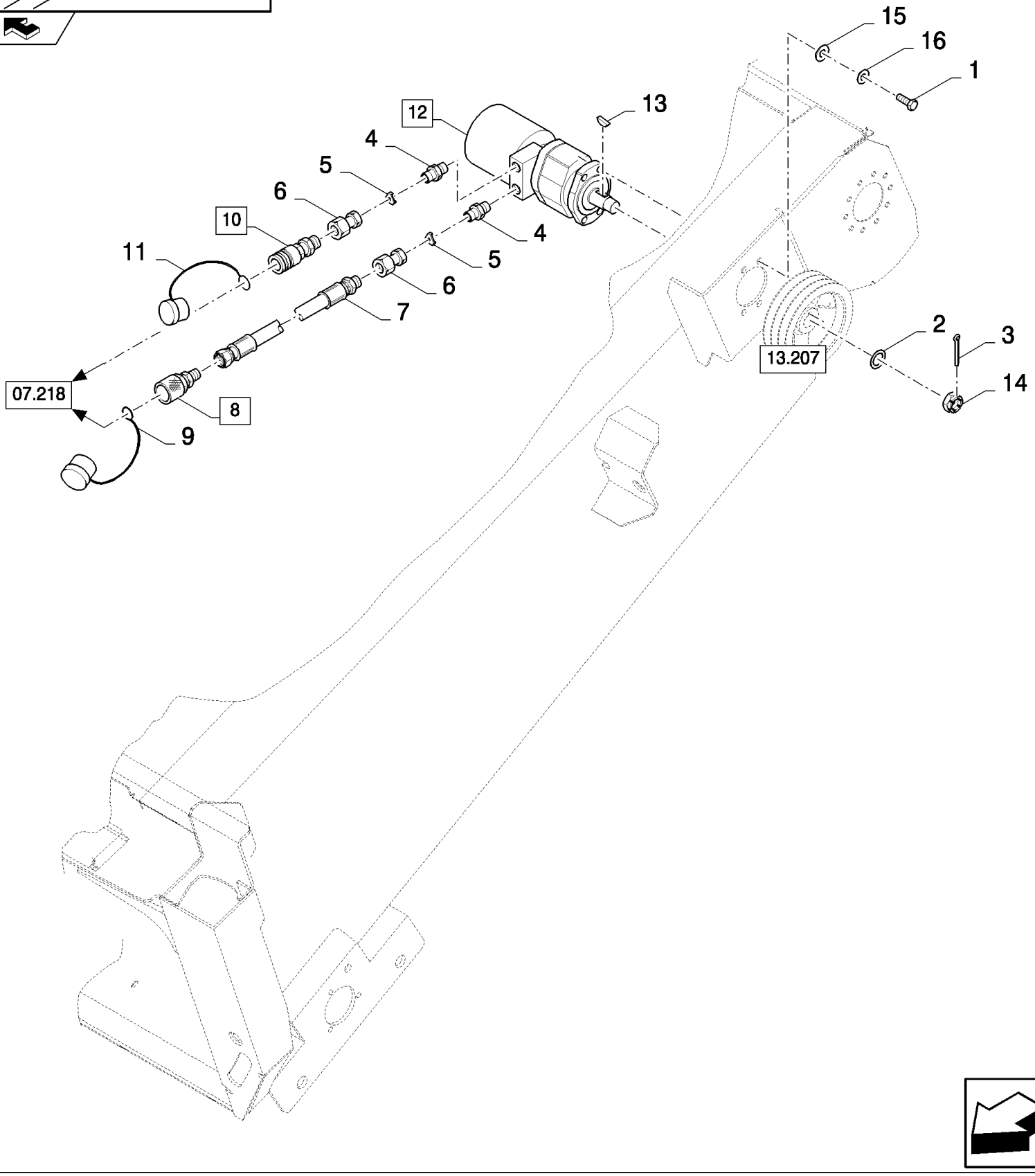

CSX7080 C659 - COMBINE (9/06-8/08)

07.201(01) HYDRAULIC DRIVEN REVERSING SYSTEM

ссылка	Номер детали	Кол-во	Описание
1	87909	4	BOLT, Hex, 1/2"-13 x 1", G5, Full Thd,
2	26402	1	WASHER,
3	300416	1	PIN, SPLIT (COTTER), M4 x 50,
4	84437540	2	CONNECTOR, HYD.,
5	80420815	2	VALVE, RESTRICTOR,
6	84433372	2	CONNECTOR, HYD.,
7	9512067	1	HOSE, , BSN C611
7	87682203	1	HOSE, FLEXIBLE, , ASN D612
8	457420	1	JOINT, UNIVERSAL, (11)
9	9508643	1	CAP,
10	457449	1	JOINT, UNIVERSAL, (9)
11	9508639	1	CAP,
12	84444687	1	REVERSER, (13,14)
13	NSS	1	NOT SERVICED SEPARATELY,
14	NSS	1	NOT SERVICED SEPARATELY,
15	140223	4	WASHER, , ASN D612
16	281038	4	WASHER, LOCK, Ext Tooth, 1/2", , ASN D612

07.203(01) STRAW ELEVATOR HYDRAULICS WITH LATERAL FLOTATION

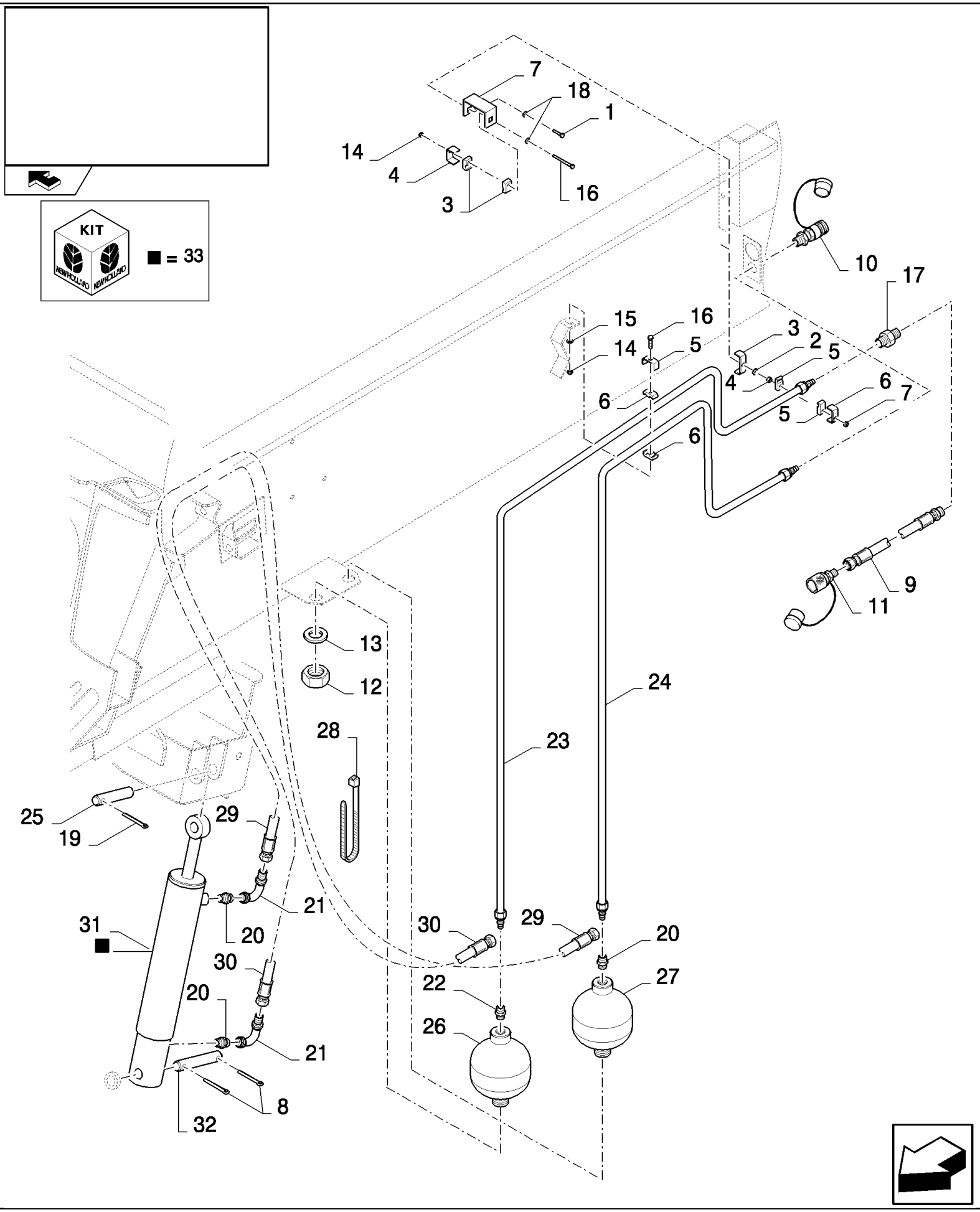

CSX7080 C659 - COMBINE (9/06-8/08)

07.203(01) STRAW ELEVATOR HYDRAULICS WITH LATERAL FLOTATION

ссылка	Номер детали	Кол-во	Описание
1	120100	1	BOLT, Hex, M6 x 20, 8.8,
2	434097	1	BRACKET,
3	433008	2	CLAMP,
4	442340	1	SUPPORT,
5	431941	2	SUPPORT,
6	430357	4	CLAMP,
7	84018986	1	SUPPORT,
8	412686	2	PIN, SPLIT (COTTER), M5 x 32,
9	84448308	1	HOSE, FLEXIBLE,
10	84077513	1	COUPLING, QUICK, MALE,
11	84077512	1	COUPLING, QUICK, MALE,
12	308823	2	NUT, M28 x 1.5, Cl 8,
13	140110	2	WASHER,
14	412152	3	NUT, LOCK, M6 x 1, Cl 8.8,
15	86588450	1	WASHER, M6,
16	120056	3	SCREW, Hex, M6 x 50, 8.8,
17	84077636	2	CONNECTOR, HYD.,
18	412649	2	WASHER, SPRING, Belleville, M6,
19	130012	1	PIN, SPLIT (COTTER), M5 x 50,
20	386215	4	CONNECTOR, HYD.,
21	418283	2	ELBOW,
22	84064562	2	CONNECTOR, HYD.,
23	87370693	1	TUBE, HYD,
24	87370700	1	TUBE, HYD,
25	9500923	1	PIN,
26	84018365	1	ACCUMULATOR,
27	84017606	1	ACCUMULATOR,
28	396718	4	STRAP,
29	84437574	1	HOSE, FLEXIBLE,
30	84031279	1	HOSE, HYDRAULIC,
31	84098946	1	HYDRAULIC CYLINDER, (33)
32	9593306	1	PIN,
33	84026075	1	KIT, SEALS,

07.203(A 01) STRAW ELEVATOR HYDRAULICS WITH LATERAL FLOTATION - FOR LATERALE ONLY

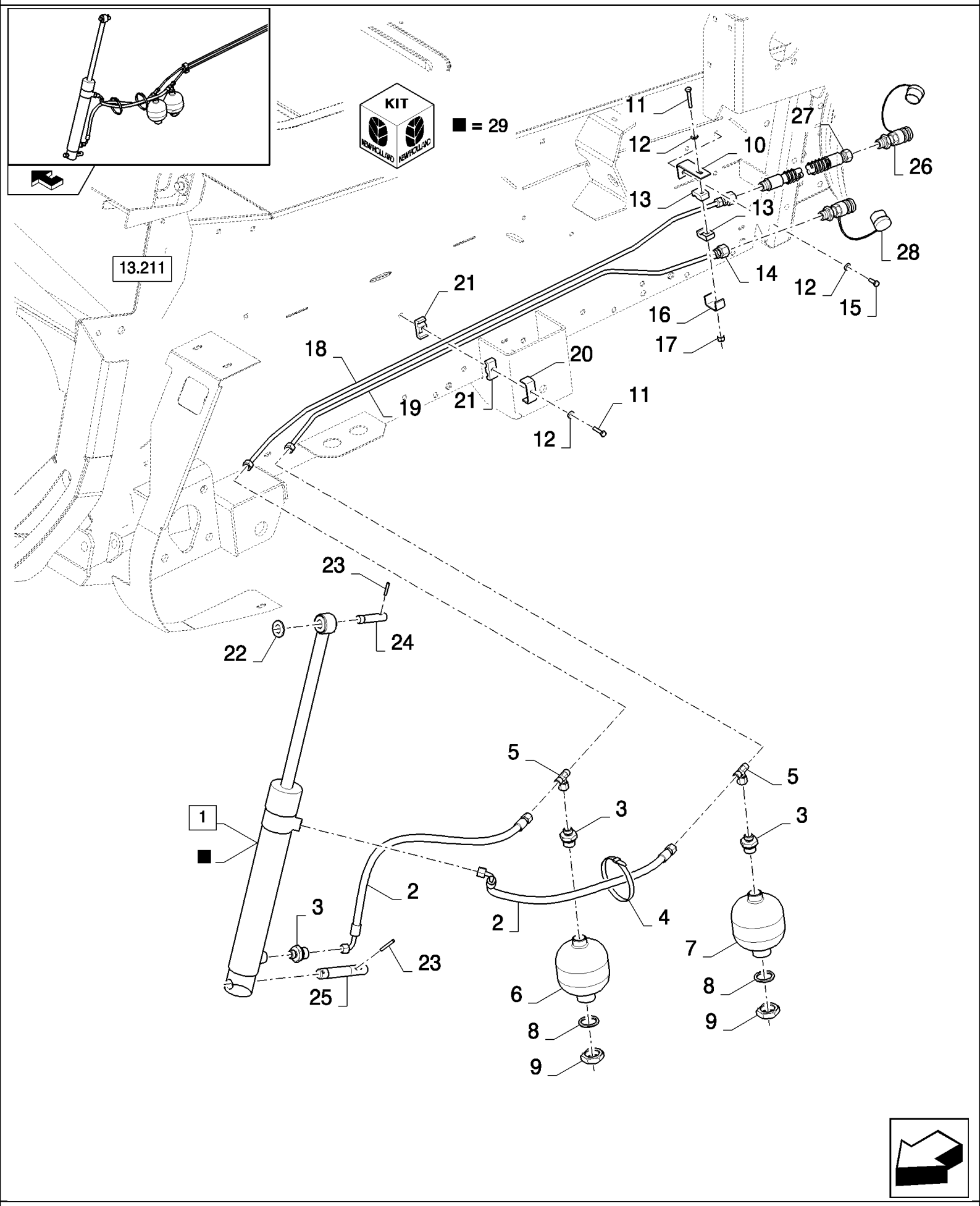

CSX7080 C659 - COMBINE (9/06-8/08)

07.203(A 01) STRAW ELEVATOR HYDRAULICS WITH LATERAL FLOTATION - FOR LATERALE ONLY

ссылка	Номер детали	Кол-во	Описание
1	87593455	1	HYDRAULIC CYLINDER, (29)
2	87657083	2	HOSE, FLEXIBLE,
3	386215	4	CONNECTOR, HYD.,
4	396718	2	STRAP,
5	87734612	2	CONNECTOR, HYD.,
6	84018365	1	ACCUMULATOR,
7	84017606	1	ACCUMULATOR,
8	140110	2	WASHER,
9	308823	2	NUT, M28 x 1.5, Cl 8,
10	87732892	1	PLATE, FIXING,
11	120102	3	SCREW, Hex, M6 x 40, 8.8, Full Thd,
12	322357	4	WASHER, SPRING, Belleville, M6,
13	433008	2	CLAMP,
14	84077626	2	
15	120100	1	BOLT, Hex, M6 x 20, 8.8,
16	433101	1	SUPPORT,
17	353308	1	NUT, M6 x 1, Cl 8,
18	87707789	1	TUBE, HYD,
19	87707791	1	TUBE, HYD,
20	431941	2	SUPPORT,
21	430357	4	CLAMP,
22	378246	2	WASHER,
23	378246	2	WASHER,
24	9500923	1	PIN,
25	9593306	1	PIN,
26	84077512	1	COUPLING, QUICK, MALE,
27	84448308	1	HOSE, FLEXIBLE,
28	84077513	1	COUPLING, QUICK, MALE,
29	84026075	1	KIT, SEALS,

07.205(01) CYLINDERS, STRAW ELEVATOR

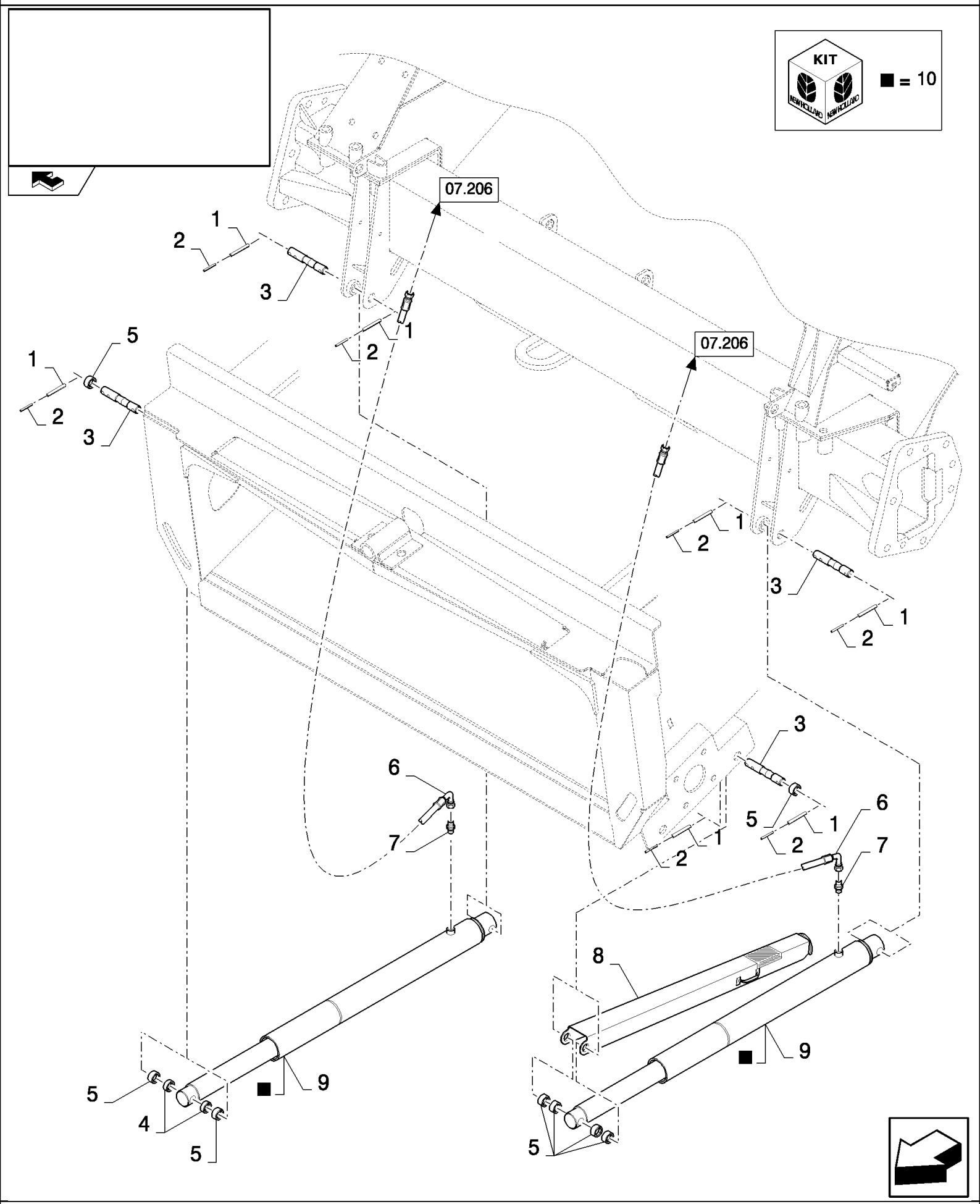

CSX7080 C659 - COMBINE (9/06-8/08)

07.205(01) CYLINDERS, STRAW ELEVATOR

ссылка	Номер детали	Кол-во	Описание
1	381928	8	PIN, LOCK, M10 x 50, Slotted,
2	333960	8	PIN, LOCK, M6 x 50, Slotted, 11MM
3	87343031	4	PIN,
4	84073733	2	BUSHING, 26MM
5	84071307	10	BUSHING,
6	84989465	2	HOSE, FLEXIBLE,
7	395782	4	CONNECTOR, HYD.,
8	84449016	1	SUPPORT,
9	84444496	2	CYLINDER, (10)
10	84807313	2	KIT, SEALS,

07.205(A 01) CYLINDERS, STRAW ELEVATOR, FOR ITALY

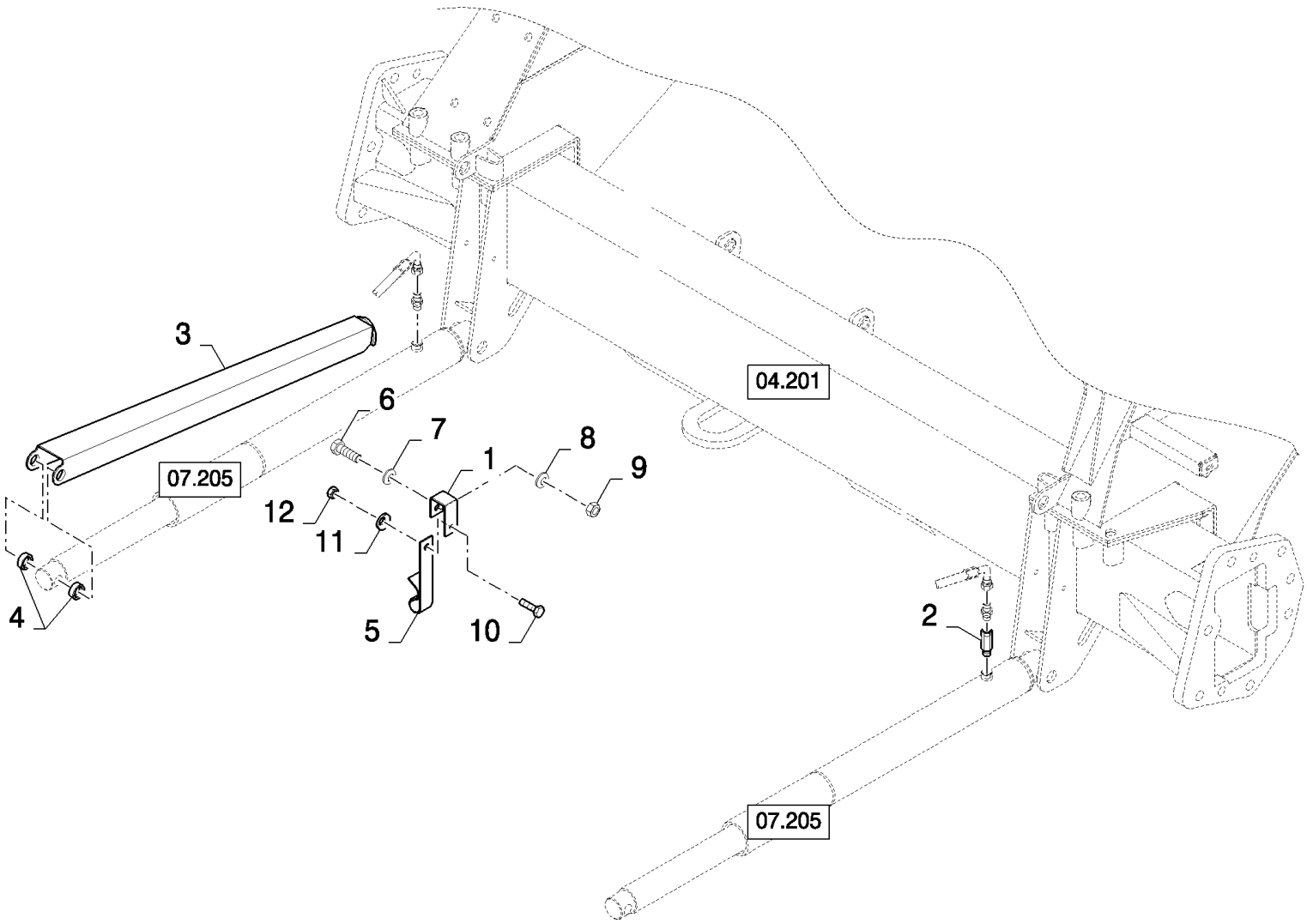

CSX7080 C659 - COMBINE (9/06-8/08)

07.205(A 01) CYLINDERS, STRAW ELEVATOR, FOR ITALY

ссылка	Номер детали	Кол-во	Описание
1	84448266	1	SUPPORT,
2	84446999	1	VALVE, CHECK, , FOR FLIP-UP CORNHEADER ONLY
3	84449058	1	SUPPORT,
4	84071307	4	BUSHING,
5	332672	1	HOOK,
6	9706704	1	BOLT, Hex, M10 x 35, 8.8, Full Thd,
7	140042	1	WASHER, M10 x 34 x 3,
8	140045	1	WASHER, SPRING, Belleville, M10,
9	100016	1	NUT, M10, Cl 8,
10	120100	1	BOLT, Hex, M6 x 20, 8.8,
11	322357	1	WASHER, SPRING, Belleville, M6,
12	9706755	1	NUT, M6, Cl 8,

07.205(B 01) CYLINDERS, STRAW ELEVATOR - FOR GERMANY

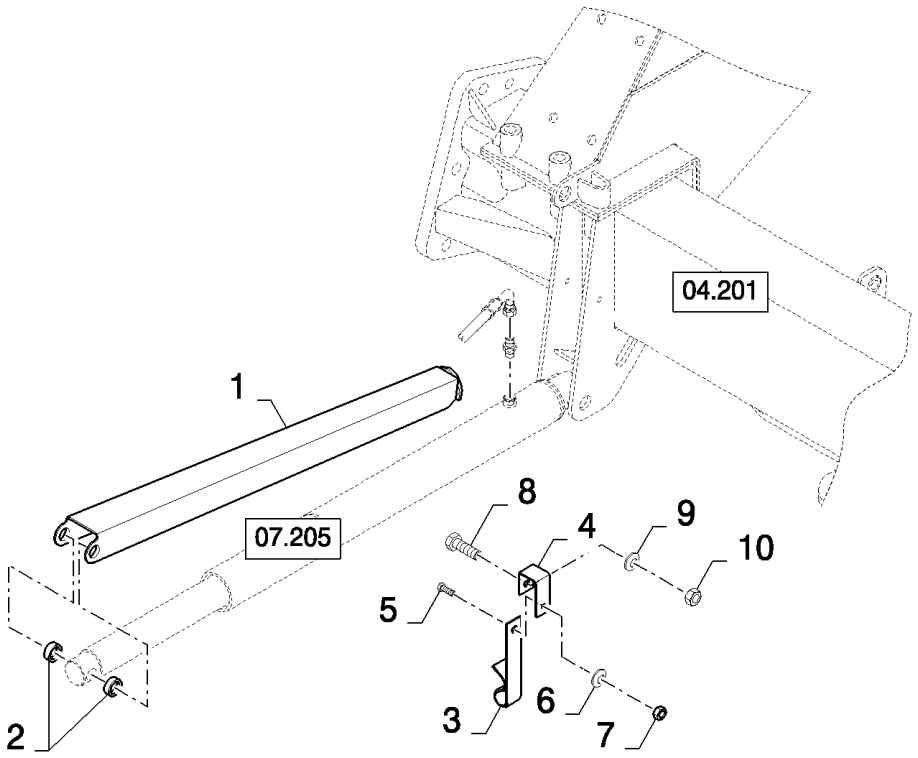

CSX7080 C659 - COMBINE (9/06-8/08)

07.205(B 01) CYLINDERS, STRAW ELEVATOR - FOR GERMANY

ссылка	Номер детали	Кол-во	Описание
1	84449058	1	SUPPORT,
1	84449367	1	SUPPORT, , FOR FLIP-UP CORNHEADER ONLY
2	84071307	2	BUSHING,
3	332672	1	HOOK,
4	84448266	1	SUPPORT,
5	86508568	1	SCREW, Hex, M6 x 16, 8.8,
6	322357	1	WASHER, SPRING, Belleville, M6,
7	9706755	1	NUT, M6, Cl 8,
8	43139	1	SCREW, Hex, M10 x 25, 8.8, Full Thd,
9	140045	1	WASHER, SPRING, Belleville, M10,
10	100016	1	NUT, M10, Cl 8,

07.206(A 01) CYLINDERS, STRAW ELEVATOR

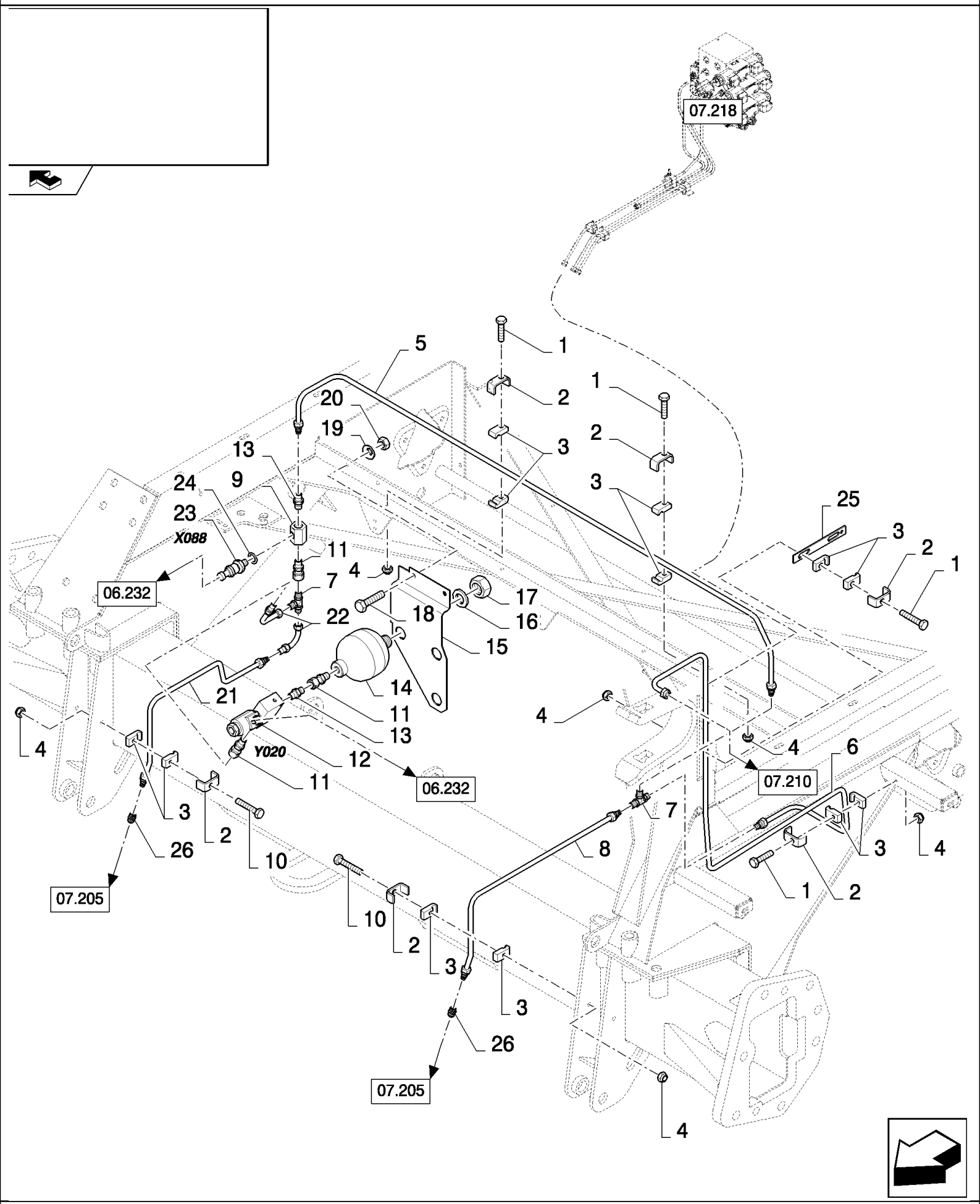

CSX7080 C659 - COMBINE (9/06-8/08)

07.206(A 01) CYLINDERS, STRAW ELEVATOR

ссылка	Номер детали	Кол-во	Описание
1	86977790	4	SCREW, Hex, M6 x 45, 8.8,
2	442340	7	SUPPORT,
3	433008	14	CLAMP,
4	412152	7	NUT, LOCK, M6 x 1, Cl 8.8,
5	84437937	1	TUBE, HYD,
6	87344951	1	TUBE, HYD,
7	150019	2	CONNECTION, 3 WAY,
8	84452309	1	TUBE, HYD,
9	84334080	1	CONNECTOR, HYD.,
10	120056	2	SCREW, Hex, M6 x 50, 8.8,
11	84018409	3	CONNECTOR, HYD.,
12	84439576	1	VALVE, HYDRAULIC,
13	395782	4	CONNECTOR, HYD.,
14	84018325	1	ACCUMULATOR,
15	84441047	1	SUPPORT,
16	140110	1	WASHER,
17	308823	1	NUT, M28 x 1.5, Cl 8,
18	43127	2	BOLT, Hex, M8 x 25, 8.8,
19	322358	2	WASHER, SPRING, Belleville, M8,
20	9706690	2	NUT, M8, Cl 8,
21	84452311	1	TUBE, HYD,
22	9508529	2	ELBOW,
23	86523197	1	SENSOR, (24)
24	84320139	1	O-RING,
25	919316	1	SUPPORT,
26	150018	1	CONNECTOR, HYD.,

07.207(A 01) HYDRAULICS FOR ENGINE

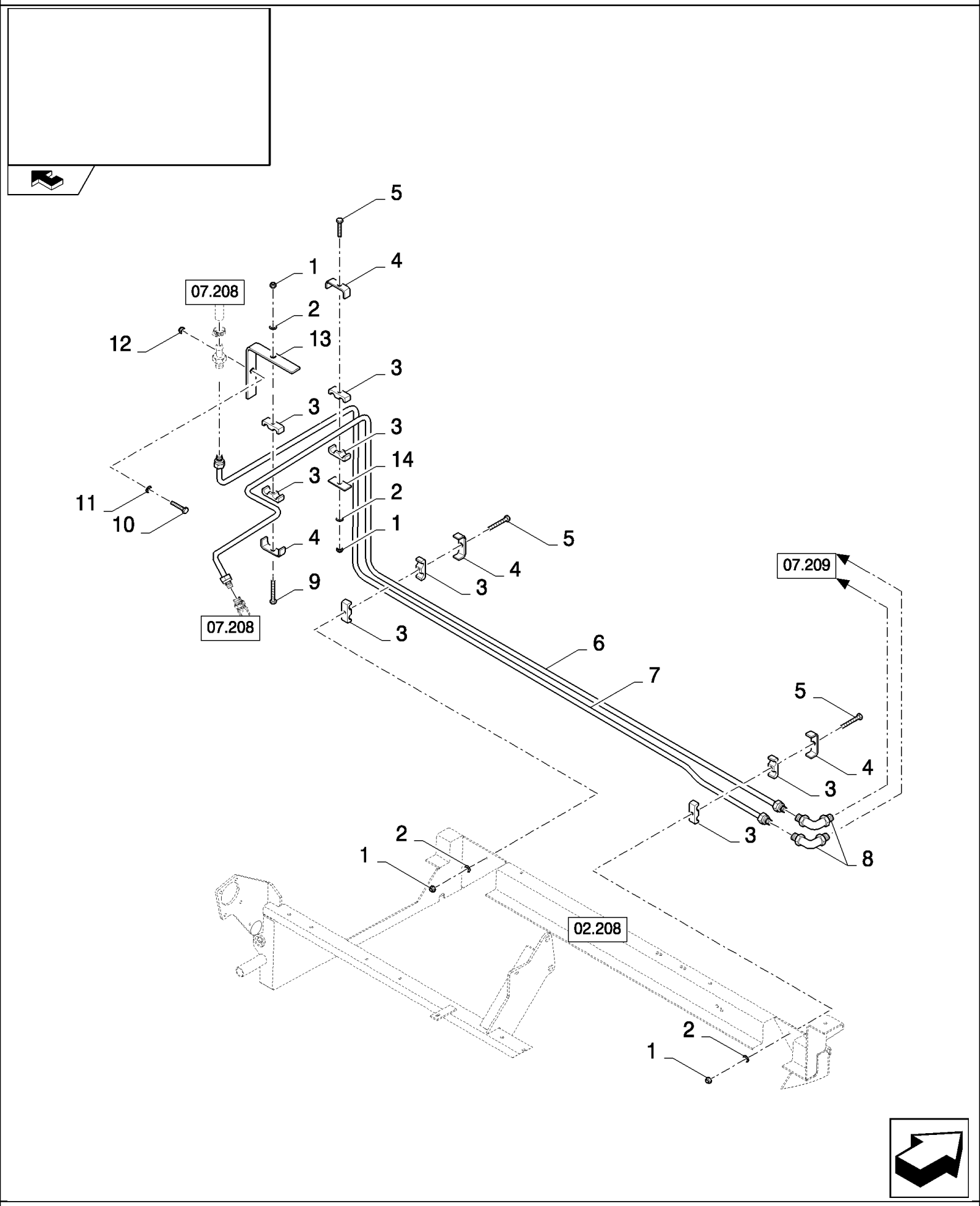

CSX7080 C659 - COMBINE (9/06-8/08)

07.207(A 01) HYDRAULICS FOR ENGINE

ссылка	Номер детали	Кол-во	Описание
1	412152	4	NUT, LOCK, M6 x 1, Cl 8.8,
2	86588450	4	WASHER, M6,
3	430356	8	CLAMP,
4	84814948	4	SUPPORT,
5	120056	2	SCREW, Hex, M6 x 50, 8.8,
6	87354108	1	TUBE, HYD,
7	87354097	1	TUBE, HYD,
8	84439317	2	CONNECTOR, HYD.,
9	338413	1	SCREW, Hex, M6 x 60, 8.8,
10	43140	1	BOLT, Hex, M10 x 30, 8.8, Full Thd,
11	140045	1	WASHER, SPRING, Belleville, M10,
12	100016	1	NUT, M10, Cl 8,
13	9813452	1	BRACKET,
14	434103	1	PLATE,

07.208(A 01) HYDRAULIC PUMP, WITH LATERAL FLOTATION

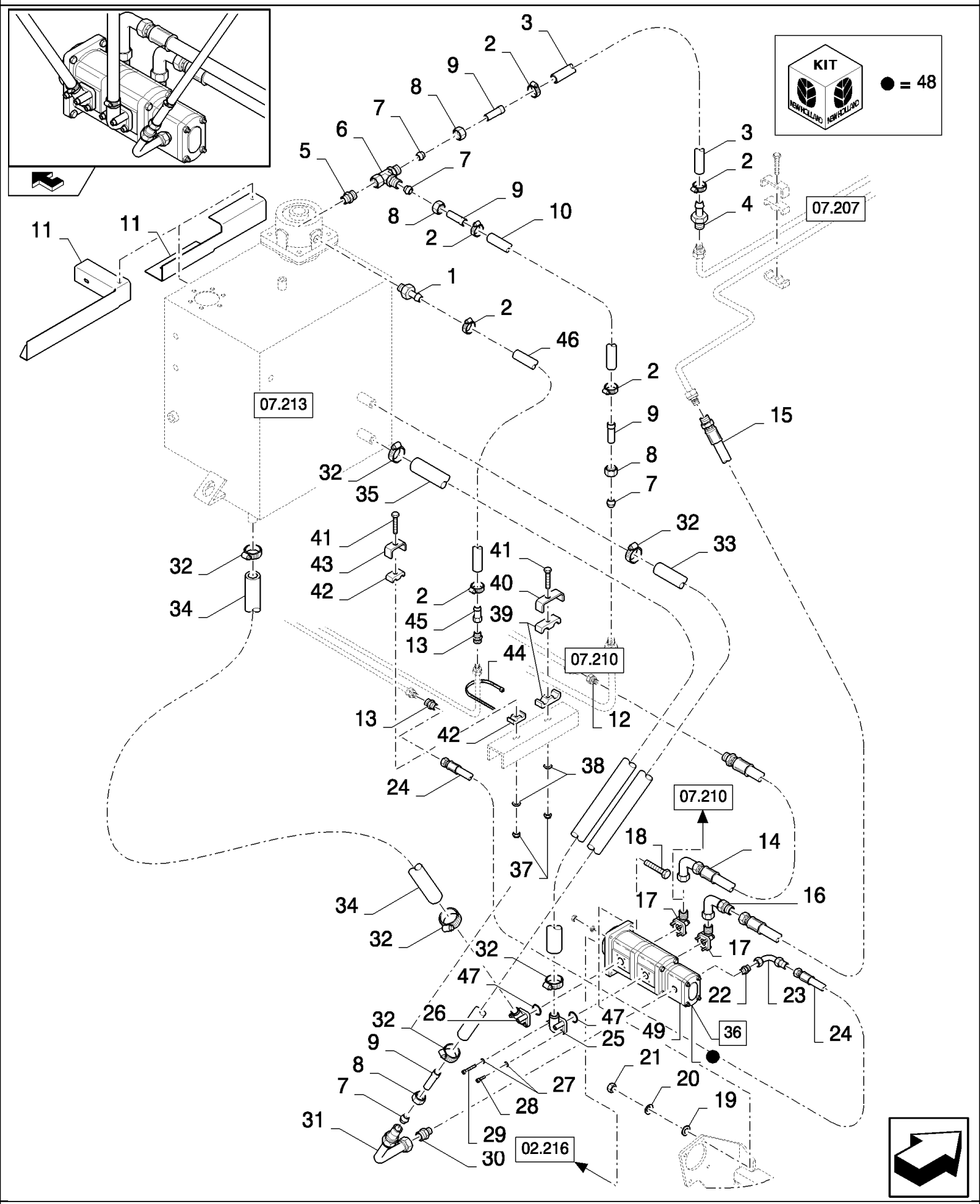

CSX7080 C659 - COMBINE (9/06-8/08)

07.208(A 01) HYDRAULIC PUMP, WITH LATERAL FLOTATION

ссылка	Номер детали	Кол-во	Описание
1	457407	1	CONNECTOR, HYD.,
2	326082	8	CLAMP,
3	87332266	1	HOSE ASSY.,
4	84000318	1	CONNECTOR, HYD.,
5	9501819	1	CONNECTOR, HYD.,
6	84042442	1	CONNECTION, 3 WAY,
7	335168	4	FERRULE, 18MM
8	335170	4	NUT, 18MM
9	84012346	4	TUBE,
10	750207	1	HOSE,
11	87359515	1	SUPPORT, , BSN C559
11	87601995	1	, ASN D560
12	335174	1	CONNECTOR, HYD.,
13	150018	2	CONNECTOR, HYD.,
14	9815904	1	SLEEVE,
15	426397	1	HOSE, FLEXIBLE,
16	435349	1	ELBOW,
17	337208	2	ELBOW,
18	43128	4	BOLT, Hex, M8 x 30, 8.8,
19	140016	4	WASHER, M8 x 16 x 1.6,
20	412654	4	WASHER, LOCK, 8MM
21	9706690	4	NUT, M8, Cl 8,
22	84454640	1	CONNECTOR, HYD.,
23	9508529	1	ELBOW,
24	9833953	1	HOSE,
25	450594	1	ELBOW,
26	753432	1	FILTER,
27	140044	8	WASHER, 6MM
28	120229	4	SCREW, Hex Soc Hd, M6 x 20, 8.8,
29	356464	4	SCREW, M6x50
30	394373	1	CONNECTOR, HYD.,
31	84019177	1	ELBOW,
32	382527	4	CLAMP, HOSE,
33	84989249	1	HOSE,
34	84989442	1	HOSE,
35	84989443	1	HOSE,
36	84444861	1	PUMP, HYDRAULIC, (48,49)
37	412152	2	NUT, LOCK, M6 x 1, Cl 8.8,
38	86588450	2	WASHER, M6,
39	430356	2	CLAMP,
40	84814948	1	SUPPORT,
41	120056	2	SCREW, Hex, M6 x 50, 8.8,
42	430357	2	CLAMP,
43	431941	1	SUPPORT,

07.208(A 01) HYDRAULIC PUMP, WITH LATERAL FLOTATION

ссылка	Номер детали	Кол-во	Описание
44	396718	2	STRAP,
45	84434919	1	CONNECTOR, HYD.,
46	87332267	1	HOSE ASSY.,
47	167266	2	O-RING, 12-1, 90 Duro, .924 ID x .116" Thk,
48	84607229	2	KIT, SEALS,
49	327187	2	GASKET,
49	418846	2	GASKET,

07.209(A 01) HYDRAULIC LINES FOR STEERING VALVE

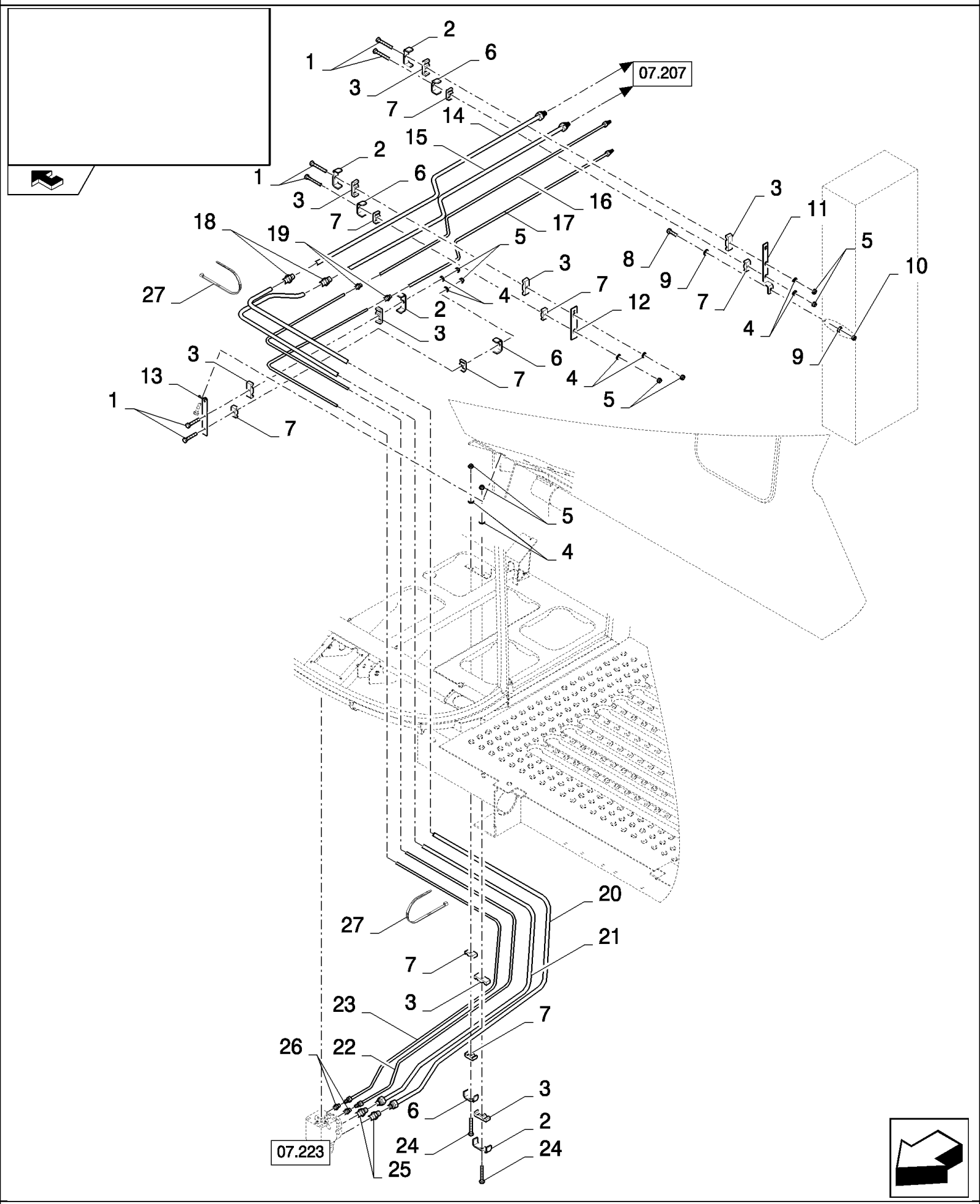

CSX7080 C659 - COMBINE (9/06-8/08)

07.209(A 01) HYDRAULIC LINES FOR STEERING VALVE

ссылка	Номер детали	Кол-во	Описание
1	120056	6	SCREW, Hex, M6 x 50, 8.8,
2	84814948	4	SUPPORT,
3	430356	8	CLAMP,
4	86588450	8	WASHER, M6,
5	412152	8	NUT, LOCK, M6 x 1, Cl 8.8,
6	431941	4	SUPPORT,
7	430357	8	CLAMP,
8	120100	1	BOLT, Hex, M6 x 20, 8.8,
9	322357	2	WASHER, SPRING, Belleville, M6,
10	9706755	1	NUT, M6, Cl 8,
11	84434499	1	SUPPORT,
12	919316	1	SUPPORT,
13	84434480	1	SUPPORT,
14	84440861	1	TUBE, HYD,
15	84440859	1	TUBE, HYD,
16	84441089	1	TUBE, HYD,
17	87354756	1	TUBE, HYD,
18	335174	2	CONNECTOR, HYD.,
19	150017	2	CONNECTOR, HYD.,
20	84440170	1	TUBE, HYD,
21	84460667	1	HOSE,
22	84438546	1	TUBE, HYD,
23	84440164	1	TUBE, HYD,
24	86977790	2	SCREW, Hex, M6 x 45, 8.8,
25	394372	2	CONNECTOR, HYD.,
26	395019	2	CONNECTOR, HYD.,
27	86566989	10	STRAP, CABLE,

07.210(01) CYLINDER FOR UNLOADING AUGER AND LH TUBES

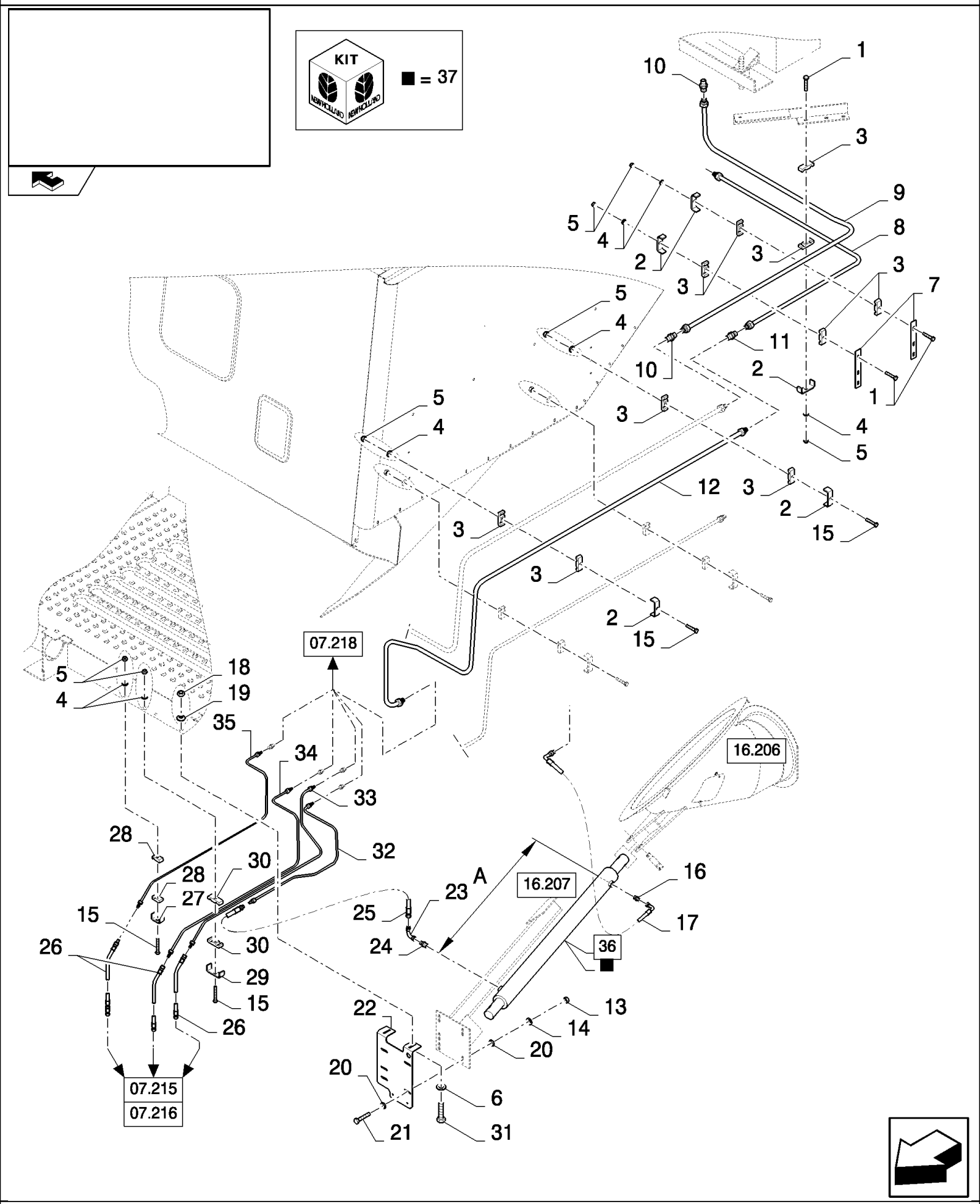

CSX7080 C659 - COMBINE (9/06-8/08)

07.210(01) CYLINDER FOR UNLOADING AUGER AND LH TUBES

ссылка	Номер детали	Кол-во	Описание
1	120056	3	SCREW, Hex, M6 x 50, 8.8,
2	84814948	5	SUPPORT,
3	430356	10	CLAMP,
4	86588450	10	WASHER, M6,
5	412152	10	NUT, LOCK, M6 x 1, Cl 8.8,
6	86511324	2	WASHER, M12 x 24 x 2.5,
7	84447755	2	BRACKET,
8	84437960	1	TUBE, HYD,
9	84437970	1	TUBE, HYD,
10	335173	2	CONNECTOR, HYD.,
11	335174	1	CONNECTOR, HYD.,
12	87344925	1	TUBE, HYD,
13	9706690	5	NUT, M8, Cl 8,
14	322358	5	WASHER, SPRING, Belleville, M8,
15	86977790	6	SCREW, Hex, M6 x 45, 8.8,
16	386215	1	CONNECTOR, HYD.,
17	84052145	1	HOSE, FLEXIBLE,
18	9706685	2	NUT, M12, Cl 8,
19	140046	2	WASHER, Belleville, M12,
20	140041	10	WASHER, M8 x 28 x 3,
21	43128	5	BOLT, Hex, M8 x 30, 8.8,
22	84458481	1	SUPPORT,
23	396017	1	CONNECTOR, HYD.,
24	418283	1	ELBOW,
25	424524	1	HOSE, HYDRAULIC,
26	84989470	3	HOSE, FLEXIBLE,
27	433101	3	SUPPORT,
28	433008	6	CLAMP,
29	431941	3	SUPPORT,
30	430357	6	CLAMP,
31	300389	2	BOLT, Hex, M12 x 35, 8.8, Full Thd,
32	87344947	1	TUBE, HYD,
33	87344941	1	TUBE, HYD,
34	87344943	1	TUBE, HYD,
35	87344945	1	TUBE, HYD,
36	84436671	1	HYDRAULIC CYLINDER, (37)
37	9508805	1	KIT, SEALS, A=771MM
37	84023786	1	KIT, SEALS, A=709MM

07.210(D 01) HYDRAULIC TUBES, FOR HYDRAULIC DRIVEN REVERSING SYSTEM AND LATERAL FLOTATION

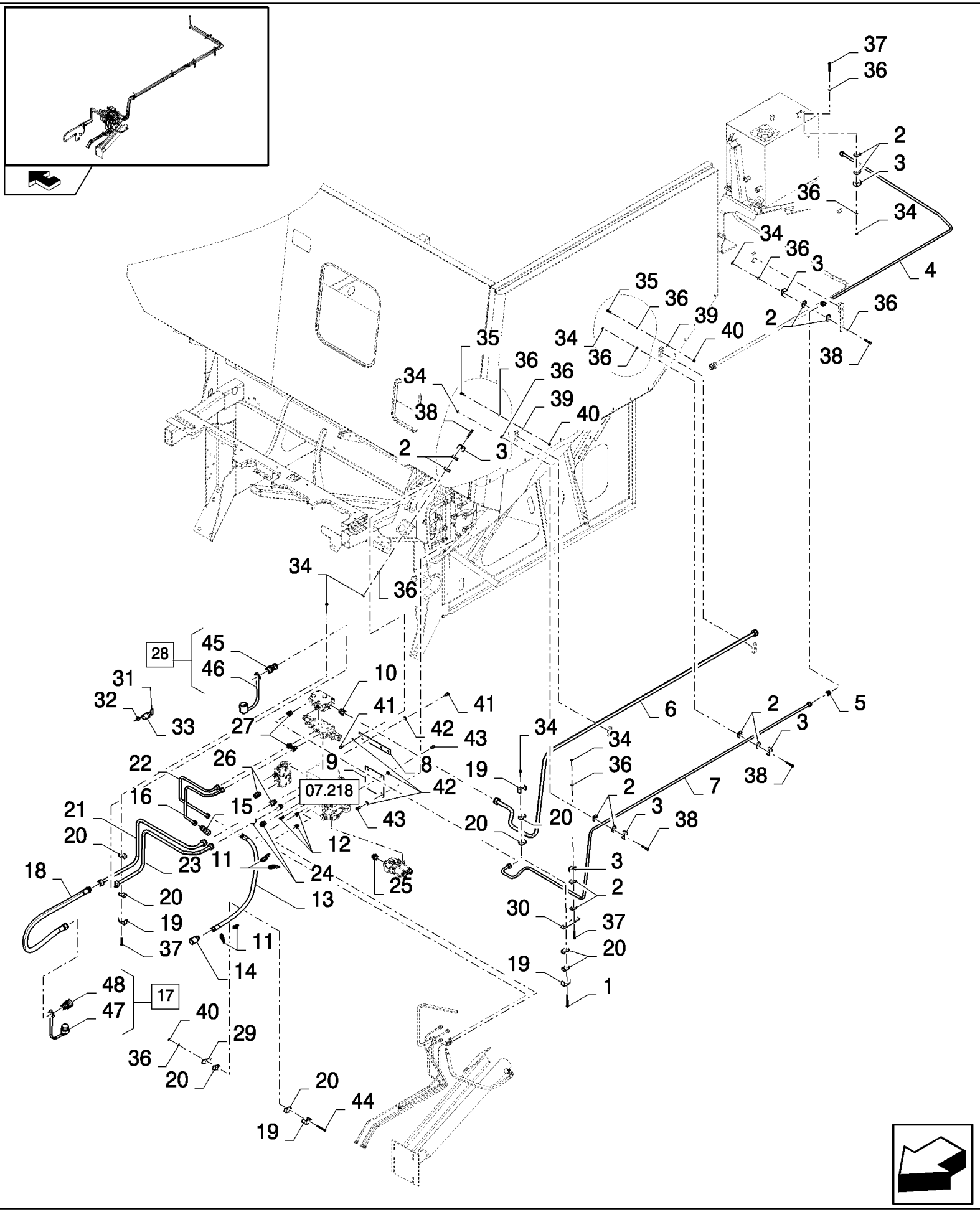

CSX7080 C659 - COMBINE (9/06-8/08)

07.210(D 01) HYDRAULIC TUBES, FOR HYDRAULIC DRIVEN REVERSING SYSTEM AND LATERAL FLOTATION

ссылка	Номер детали	Кол-во	Описание
1	86508570	1	SCREW, Hex, M6 x 80, 8.8,
2	433008	14	CLAMP,
3	442340	7	SUPPORT,
4	84438785	1	TUBE,
5	150018	1	CONNECTOR, HYD.,
6	87344923	1	TUBE, HYD,
7	87344921	1	TUBE, HYD,
8	87346038	1	SUPPORT, , BSN C543
9	87346040	1	SUPPORT, , BSN C543
10	87343790	1	FITTING, , BSN C543
11	396718	4	STRAP, , BSN C543
12	9850318	3	CONNECTOR, HYD., , BSN C543
13	84448307	1	HOSE, FLEXIBLE,
14	84077512	1	COUPLING, QUICK, MALE,
15	84077513	1	COUPLING, QUICK, MALE,
16	87344939	1	TUBE, HYD, , BSN C611
16	87677380	1	TUBE, HYD, , ASN D612
17	457420	1	JOINT, UNIVERSAL, (47,48)
18	9512067	1	HOSE, , BSN C615
18	87682505	1	HOSE, FLEXIBLE, , ASN D616
19	433100	4	SUPPORT,
20	433007	8	CLAMP,
21	87344929	1	TUBE, HYD, , BSN C615
21	87683145	1	TUBE, HYD, , ASN D616
22	87344933	1	TUBE, HYD,
23	87344935	1	TUBE, HYD, , BSN C615
23	87683143	1	TUBE, HYD, , ASN D616
24	87343788	2	FITTING, , BSN C543
25	84461871	1	FITTING, , BSN C543
26	87343789	3	FITTING, , BSN C543
27	9850317	3	CONNECTOR, HYD., , BSN C543
28	457449	1	JOINT, UNIVERSAL, (45, 46)
29	434103	1	PLATE,
30	919316	1	SUPPORT,
31	NS	2	NOT SERVICED,
32	NS	2	NOT SERVICED,
33	84042643	2	COVER, CAP,
34	412152	10	NUT, LOCK, M6 x 1, Cl 8.8,
35	120100	2	BOLT, Hex, M6 x 20, 8.8,
36	86588450	13	WASHER, M6, , BSN C543
36	86588450	10	WASHER, M6, , ASN D544
37	120056	3	SCREW, Hex, M6 x 50, 8.8,
38	86977790	5	SCREW, Hex, M6 x 45, 8.8,
39	322357	2	WASHER, SPRING, Belleville, M6,

07.210(D 01) HYDRAULIC TUBES, FOR HYDRAULIC DRIVEN REVERSING SYSTEM AND LATERAL FLOTATION

ссылка	Номер детали	Кол-во	Описание
40	9706755	2	NUT, M6, Cl 8,
41	120103	4	BOLT, Hex, M8 x 16, 8.8, , BSN C543
42	322358	8	WASHER, SPRING, Belleville, M8, , BSN C543
42	322358	4	WASHER, SPRING, Belleville, M8, , ASN D544
43	120104	4	SCREW, Hex, M8 x 20, 8.8,
44	338413	1	SCREW, Hex, M6 x 60, 8.8,
45	NSS	1	NOT SERVICED SEPARATELY,
46	9508639	1	CAP,
47	9508643	1	CAP,
48	NSS	1	NOT SERVICED SEPARATELY,

07.210(F 01) CYLINDER FOR UNLOADING AUGER AND LH TUBES - FOR LATERALE ONLY

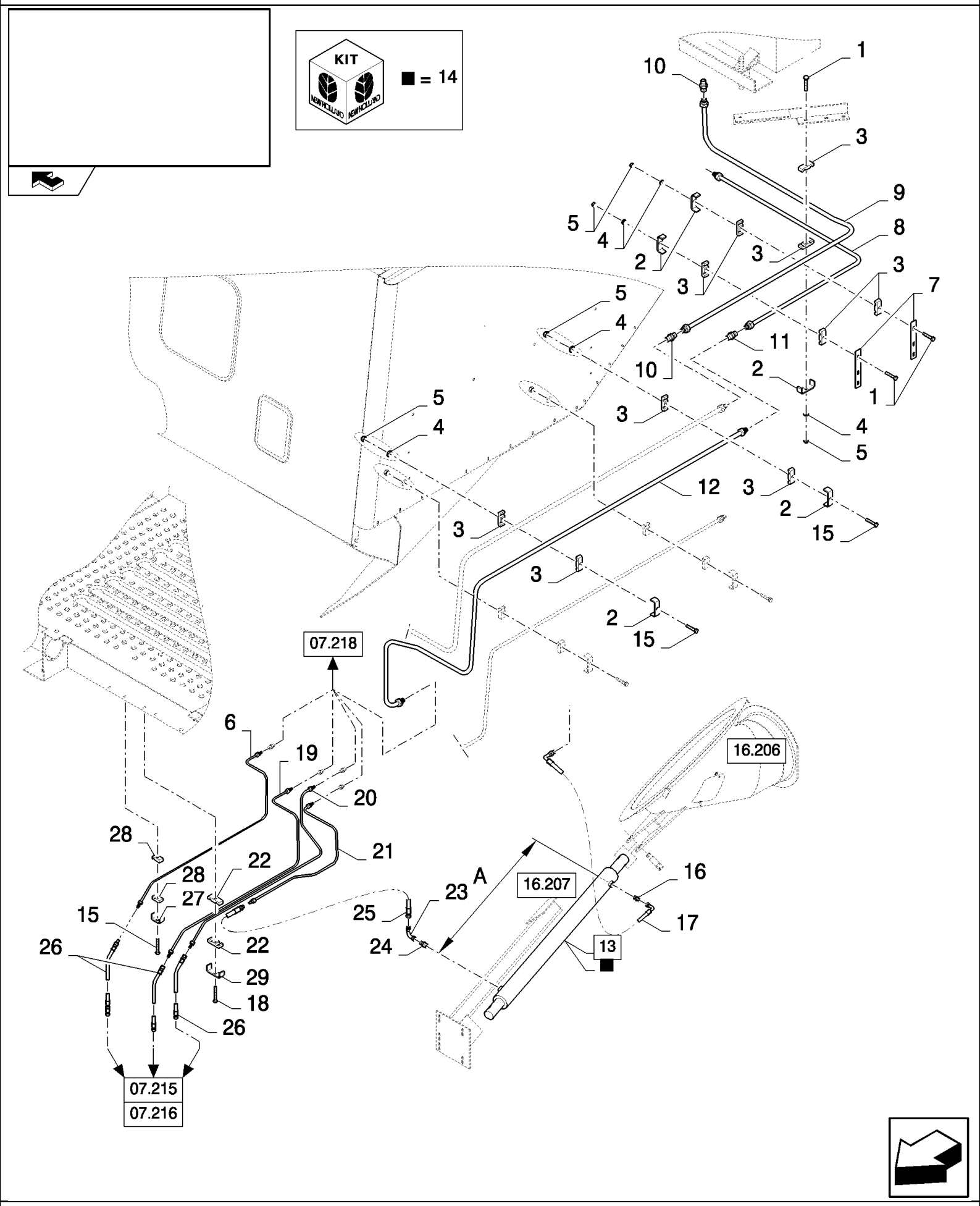

CSX7080 C659 - COMBINE (9/06-8/08)

07.210(F 01) CYLINDER FOR UNLOADING AUGER AND LH TUBES - FOR LATERALE ONLY

ссылка	Номер детали	Кол-во	Описание
1	120056	3	SCREW, Hex, M6 x 50, 8.8,
2	84814948	5	SUPPORT,
3	430356	10	CLAMP,
4	86588450	6	WASHER, M6,
5	412152	6	NUT, LOCK, M6 x 1, Cl 8.8,
6	87669600	1	TUBE, HYD,
7	84447755	2	BRACKET,
8	84437960	1	TUBE, HYD,
9	84437970	1	TUBE, HYD,
10	335173	2	CONNECTOR, HYD.,
11	335174	1	CONNECTOR, HYD.,
12	87344925	1	TUBE, HYD,
13	84436671	1	HYDRAULIC CYLINDER, (14), BSN C614
13	87618526	1	HYDRAULIC CYLINDER, , ASN D615
14	84023786	1	KIT, SEALS, A=709MM
14	9508805	1	KIT, SEALS, A=771MM
15	86977790	2	SCREW, Hex, M6 x 45, 8.8,
16	386215	1	CONNECTOR, HYD.,
17	84052145	1	HOSE, FLEXIBLE,
18	86508570	1	SCREW, Hex, M6 x 80, 8.8,
19	87669598	1	TUBE, HYD,
20	87669596	1	TUBE, HYD,
21	87344947	1	TUBE, HYD, , BSN C614
21	87675869	1	TUBE, HYD, , ASN D615
22	430357	2	CLAMP,
23	396017	1	CONNECTOR, HYD.,
24	418283	1	ELBOW,
25	424524	1	HOSE, HYDRAULIC,
26	84019350	3	HOSE, HYDRAULIC,
27	433101	1	SUPPORT,
28	433008	2	CLAMP,
29	431941	1	SUPPORT,

07.210(H 01) HYDRAULIC TUBES, FOR HYDRAULIC DRIVEN REVERSING SYSTEM AND LATERAL FLOTATION - FOR LATERALE

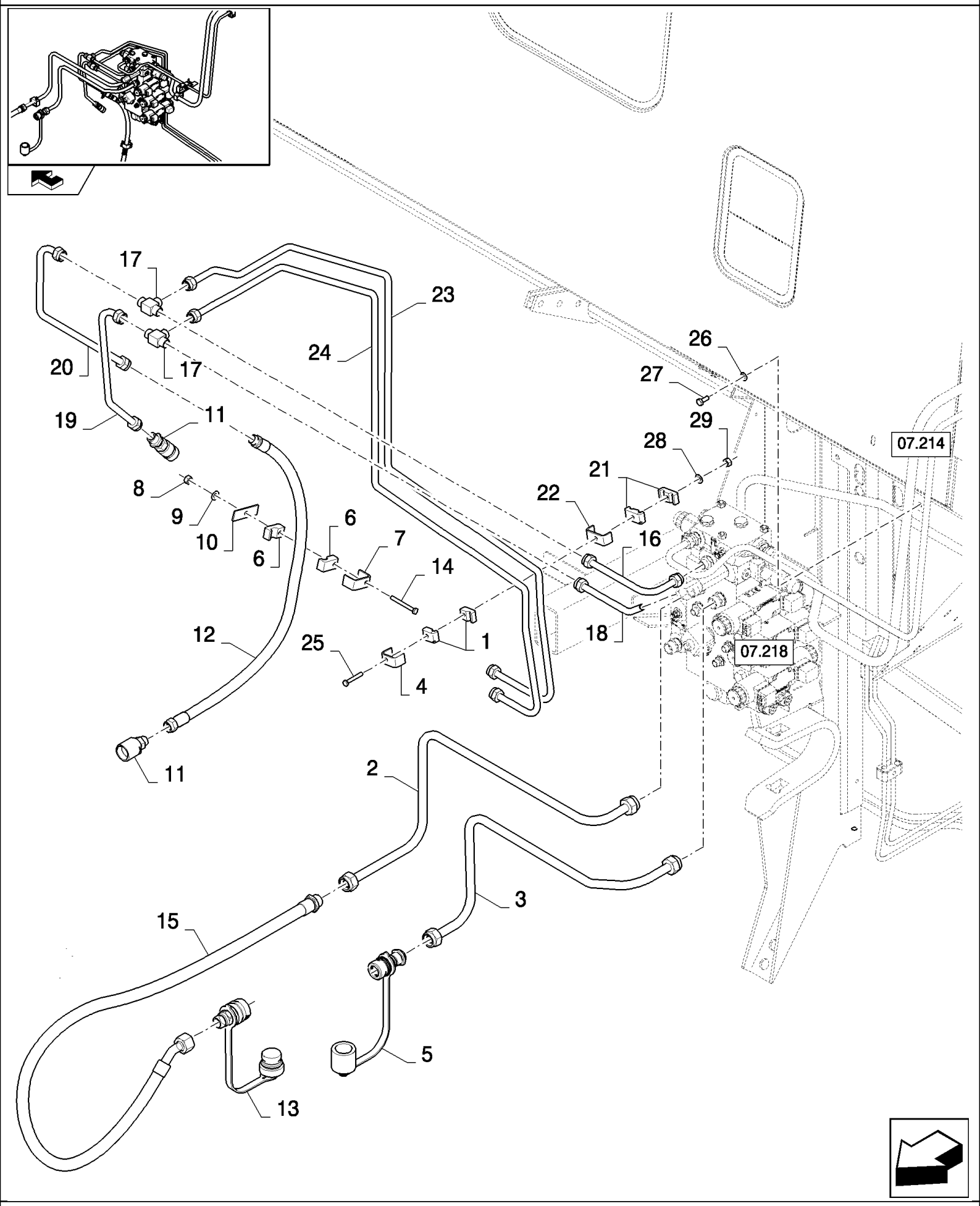

CSX7080 C659 - COMBINE (9/06-8/08)

07.210(H 01) HYDRAULIC TUBES, FOR HYDRAULIC DRIVEN REVERSING SYSTEM AND LATERAL FLOTATION - FOR LATERALE

ссылка	Номер детали	Кол-во	Описание
1	433008	2	CLAMP,
2	84077513	1	COUPLING, QUICK, MALE,
3	87683145	1	TUBE, HYD,
4	87683143	1	TUBE, HYD,
5	442340	1	SUPPORT,
6	457449	1	JOINT, UNIVERSAL,
7	433007	2	CLAMP,
8	433100	1	SUPPORT,
9	412152	1	NUT, LOCK, M6 x 1, Cl 8.8,
10	86588450	1	WASHER, M6,
11	434103	1	PLATE,
12	84077512	1	COUPLING, QUICK, MALE,
13	84448307	1	HOSE, FLEXIBLE,
14	457420	1	JOINT, UNIVERSAL,
15	338413	1	SCREW, Hex, M6 x 60, 8.8,
16	87682505	1	HOSE, FLEXIBLE,
17	87707736	1	TUBE, HYD,
18	150019	2	CONNECTION, 3 WAY,
19	87707732	1	TUBE, HYD,
20	87707734	1	TUBE, HYD,
21	87707738	1	TUBE, HYD,
22	430357	2	CLAMP,
23	431941	1	SUPPORT,
24	87707785	1	TUBE, HYD,
25	87707787	1	TUBE, HYD,
26	397985	1	BOLT, Hex, M6 x 70, 8.8, Full Thd,
27	322358	4	WASHER, SPRING, Belleville, M8,
28	120104	4	SCREW, Hex, M8 x 20, 8.8,
29	322357	1	WASHER, SPRING, Belleville, M6,
30	353308	1	NUT, M6 x 1, Cl 8,

07.211(A 01) HYDRAULIC FOR STEERING CYLINDER, ADJUSTABLE

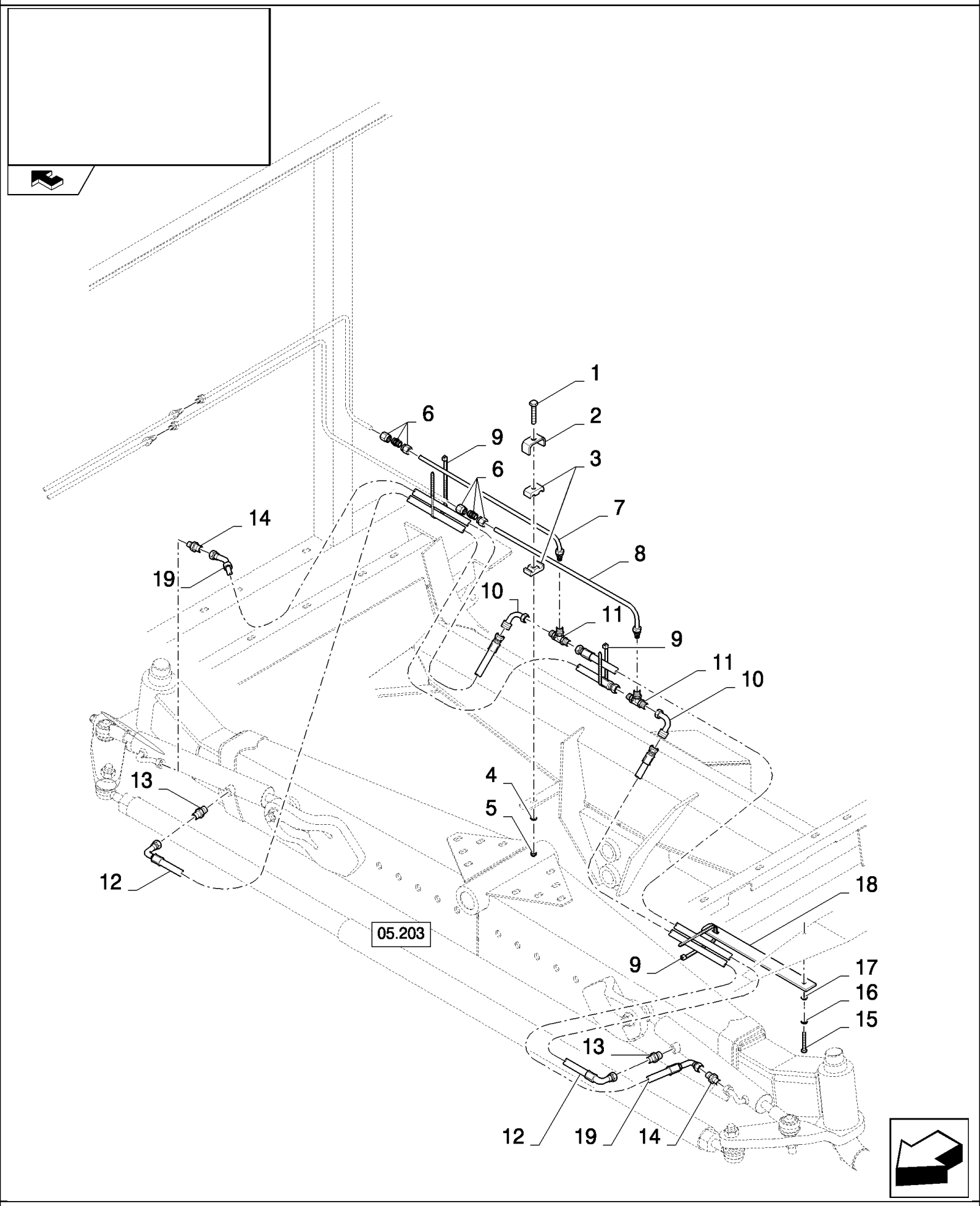

CSX7080 C659 - COMBINE (9/06-8/08)

07.211(A 01) HYDRAULIC FOR STEERING CYLINDER, ADJUSTABLE

ссылка	Номер детали	Кол-во	Описание
1	120102	2	SCREW, Hex, M6 x 40, 8.8, Full Thd,
2	431941	2	SUPPORT,
3	430357	4	CLAMP,
4	86588450	2	WASHER, M6,
5	412152	2	NUT, LOCK, M6 x 1, Cl 8.8,
6	150017	1	CONNECTOR, HYD.,
7	87355362	1	TUBE, HYD,
8	87355149	1	TUBE, HYD,
9	368582	3	STRAP,
10	418284	2	ELBOW,
11	395472	2	CONNECTION, 3 WAY,
12	84078809	2	HOSE, FLEXIBLE,
13	395019	2	CONNECTOR, HYD.,
14	84442478	2	CONNECTOR, HYD.,
15	86508583	1	BOLT, Hex, M16 x 35, 8.8,
16	140048	1	WASHER, SPRING, Belleville, M16,
17	140020	1	WASHER, M16 x 30 x 3,
18	84446279	1	PLATE, FIXING,
19	87343426	2	HOSE ASSY.,

07.212(01) HYDRAULIC TANK

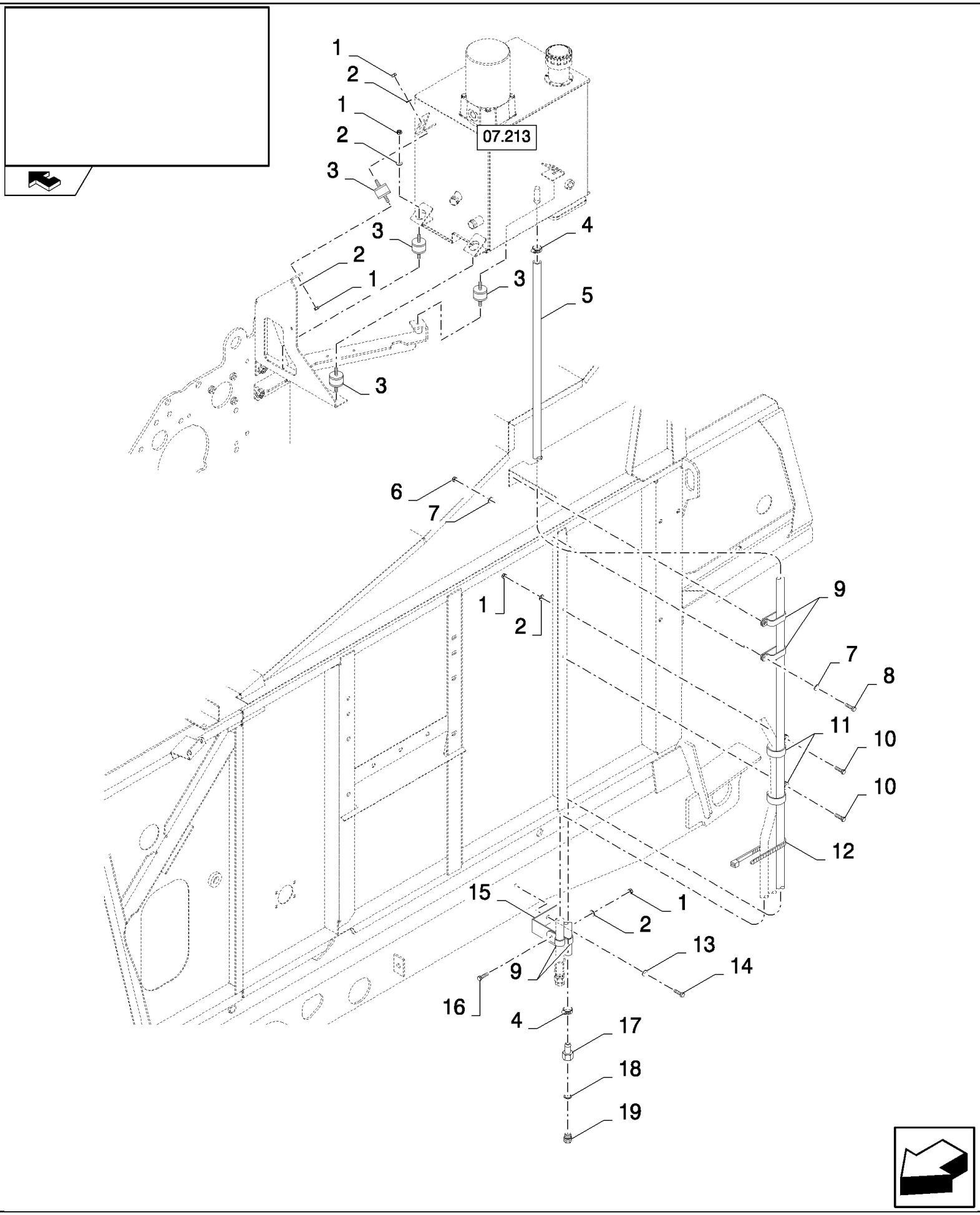

CSX7080 C659 - COMBINE (9/06-8/08)

07.212(01) HYDRAULIC TANK

ссылка	Номер детали	Кол-во	Описание
1	9706690	11	NUT, M8, Cl 8,
2	322358	11	WASHER, SPRING, Belleville, M8,
3	9833258	4	SHOCK ABSORBER,
4	326082	2	CLAMP,
5	84441444	1	HOSE,
6	9706755	1	NUT, M6, Cl 8,
7	86588450	2	WASHER, M6,
8	86977786	1	BOLT, Hex, M6 x 25, 8.8,
9	418407	4	CLAMP,
10	43128	2	BOLT, Hex, M8 x 30, 8.8,
11	417412	2	CLAMP,
12	396718	2	STRAP,
13	140045	1	WASHER, SPRING, Belleville, M10,
14	43140	1	BOLT, Hex, M10 x 30, 8.8, Full Thd,
15	9813452	1	BRACKET,
16	412479	1	BOLT, Hex, M8 x 35, 8.8,
17	326079	1	CONNECTOR, HYD.,
18	9511034	1	GASKET,
19	150060	1	PLUG,

07.212(A 01) HYDRAULIC TANK - FOR LATERALE ONLY

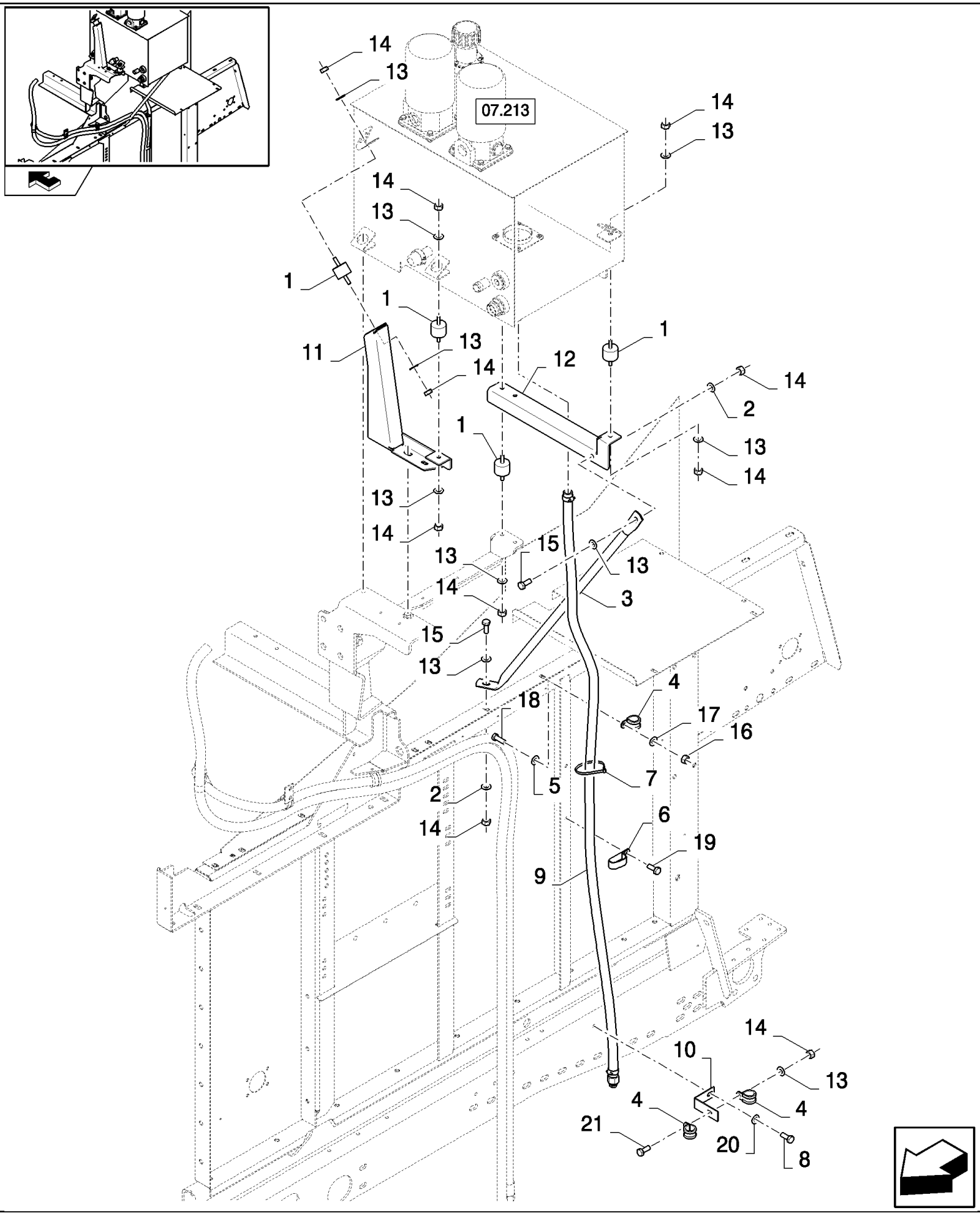

CSX7080 C659 - COMBINE (9/06-8/08)

07.212(A 01) HYDRAULIC TANK - FOR LATERALE ONLY

ссылка	Номер детали	Кол-во	Описание
1	9833258	5	SHOCK ABSORBER,
2	86624184	2	WASHER, M8 x 16 x 1.6, , BSN C615
2	86624184	3	WASHER, M8 x 16 x 1.6, , ASN D616
3	87646443	1	REINFORCEMENT,
4	418407	4	CLAMP,
5	86588450	1	WASHER, M6,
6	417412	2	CLAMP,
7	396718	2	STRAP,
8	43140	1	BOLT, Hex, M10 x 30, 8.8, Full Thd,
9	87726564	1	TUBE, HYD,
10	9813452	1	BRACKET,
11	87646439	1	SUPPORT,
12	87646441	1	SUPPORT,
13	322358	15	WASHER, SPRING, Belleville, M8, , BSN C615
13	322358	16	WASHER, SPRING, Belleville, M8, , ASN D616
14	9706690	15	NUT, M8, Cl 8, , BSN C615
14	9706690	16	NUT, M8, Cl 8, , ASN D616
15	43127	2	BOLT, Hex, M8 x 25, 8.8,
16	9706755	1	NUT, M6, Cl 8,
17	322357	1	WASHER, SPRING, Belleville, M6,
18	86977786	1	BOLT, Hex, M6 x 25, 8.8,
19	43128	2	BOLT, Hex, M8 x 30, 8.8, , BSN C615
19	43128	3	BOLT, Hex, M8 x 30, 8.8, , ASN D616
20	140045	1	WASHER, SPRING, Belleville, M10,
21	412479	1	BOLT, Hex, M8 x 35, 8.8,

07.213(01) HYDRAULIC TANK

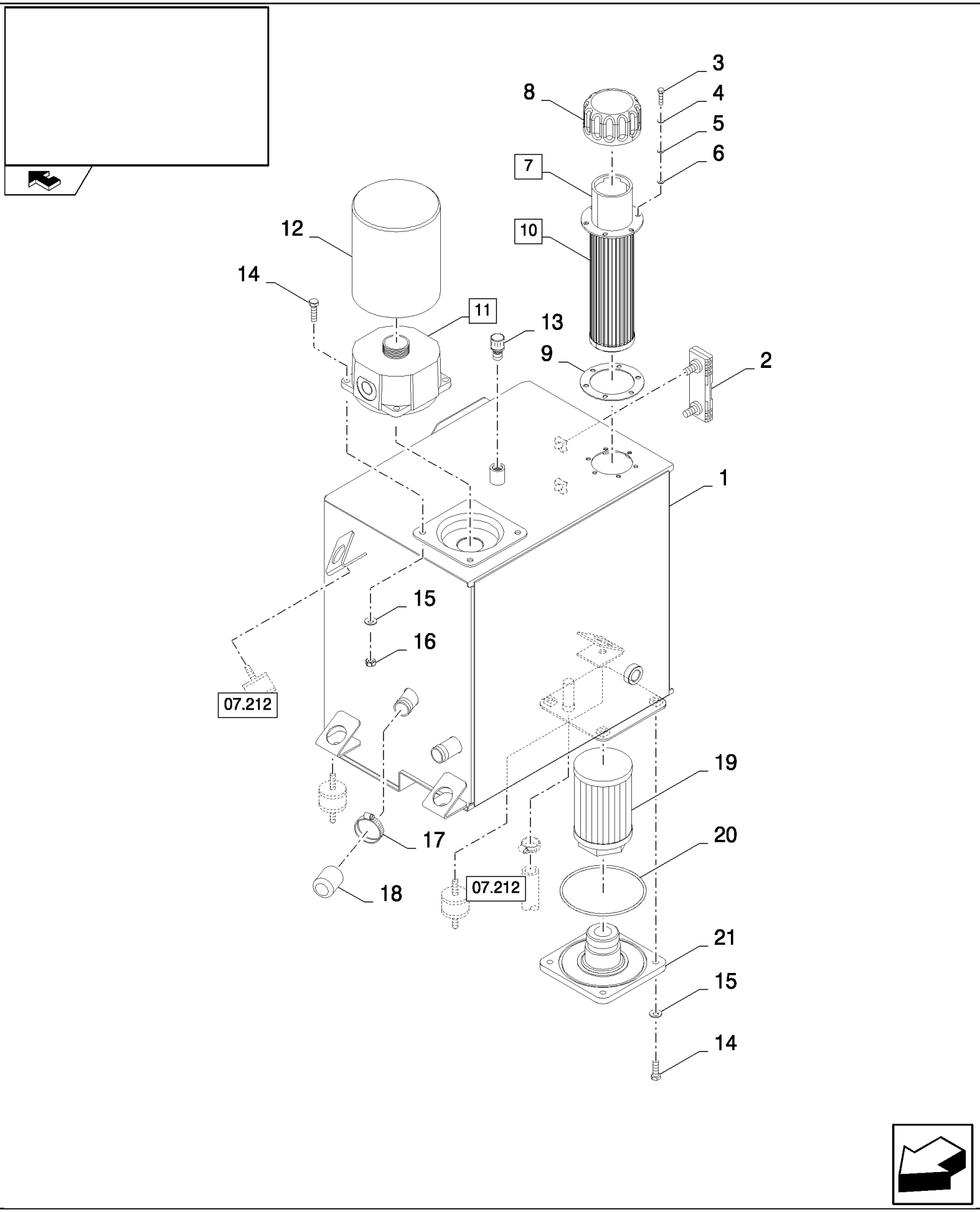

CSX7080 C659 - COMBINE (9/06-8/08)

07.213(01) HYDRAULIC TANK

ссылка	Номер детали	Кол-во	Описание
1	84983496	1	RESERVOIR, HYDRAULIC OIL,
2	923011	1	INDICATOR,
3	14304321	6	SCREW, Hex Soc Hd, M5 x 20, 8.8,
4	9824326	6	WASHER, M5,
5	373817	6	ELEMENT, SEALING,
6	446307	6	SEALRING,
7	9508294	1	CAP, FILLER, (8,9)
8	87054106	1	CAP, FILLER,
9	87054107	1	KIT, SEALS,
10	87054105	1	KIT, (9)
11	9811704	1	FILTER, HYDRAULIC OIL, (12)
12	9814477	1	FILTER, ELEMENT,
13	9817518	1	BREATHER,
14	43127	8	BOLT, Hex, M8 x 25, 8.8,
15	322358	8	WASHER, SPRING, Belleville, M8,
16	9706690	4	NUT, M8, Cl 8,
17	382527	1	CLAMP, HOSE,
18	84983512	1	CUP, COVER,
19	84031924	1	FILTER, HYDRAULIC OIL,
20	9840056	1	O-RING, -248, 70 Duro, 4.734" ID x .139" Thk,
21	84043513	1	SUPPORT,

07.213(A 01) HYDRAULIC TANK - FOR LATERALE ONLY

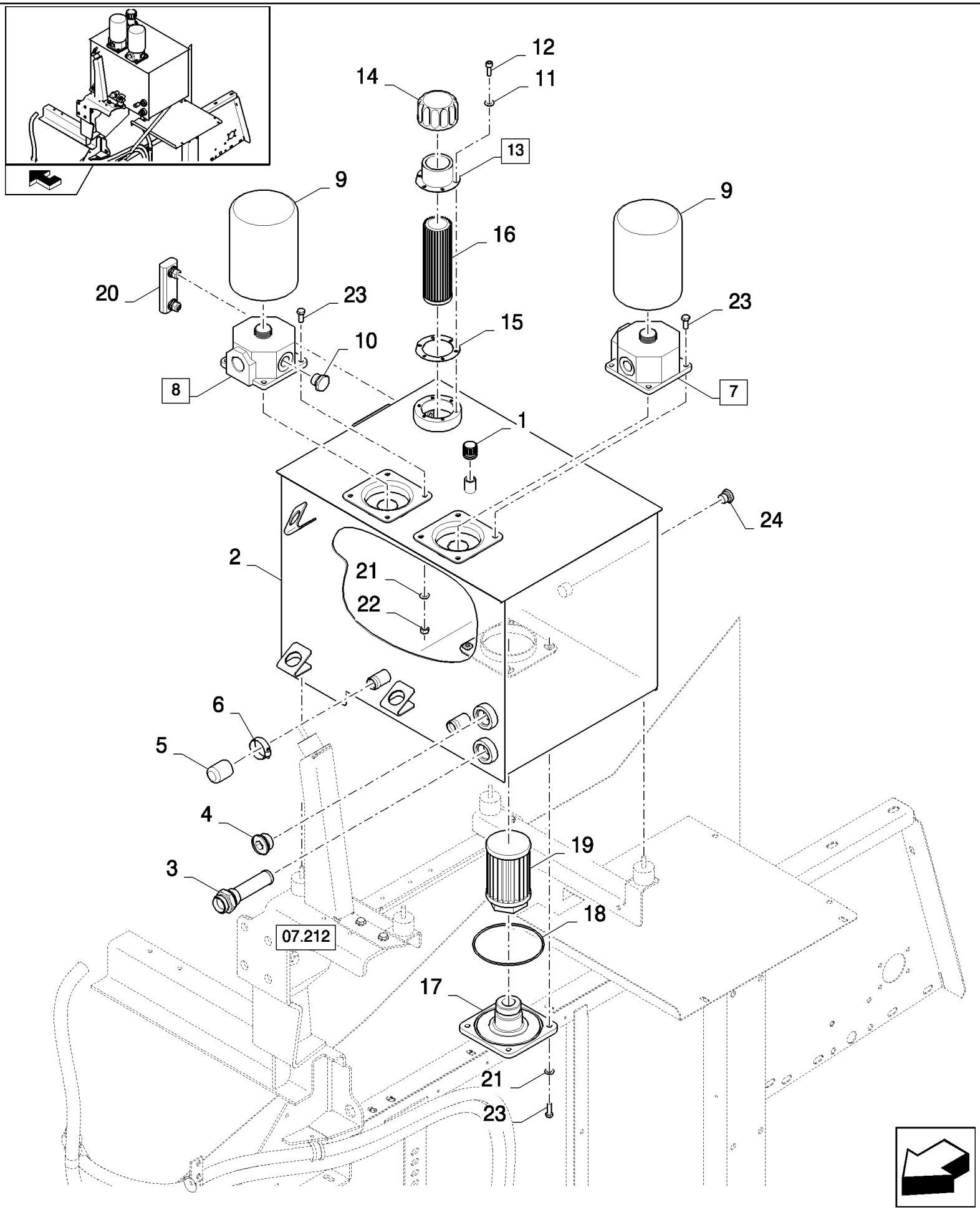

CSX7080 C659 - COMBINE (9/06-8/08)

07.213(A 01) HYDRAULIC TANK - FOR LATERALE ONLY

ссылка	Номер детали	Кол-во	Описание
1	9817518	1	BREATHER,
2	87646432	1	RESERVOIR, HYDRAULIC OIL,
3	84453604	1	FILTER, OIL COOLER,
4	86583482	1	PLUG,
5	84973512	1	
6	382527	1	CLAMP, HOSE,
7	9811704	1	FILTER, HYDRAULIC OIL, (9)
8	87653549	1	FILTER, HYDRAULIC OIL, (9)
9	9814477	1	FILTER, ELEMENT,
10	84814963	1	CONNECTOR, HYD.,
11	9824326	6	WASHER, M5,
12	14304221	6	SCREW, Hex Soc Hd, M5 x 16, 8.8,
13	9508294	1	CAP, FILLER, (14 to 16)
14	87054106	1	CAP, FILLER,
15	87054107	1	KIT, SEALS,
16	87054105	1	KIT,
17	84043513	1	SUPPORT,
18	87421149	1	O-RING,
19	84031924	1	FILTER, HYDRAULIC OIL,
20	923011	1	INDICATOR,
21	322358	12	WASHER, SPRING, Belleville, M8,
22	9706690	8	NUT, M8, Cl 8,
23	43127	12	BOLT, Hex, M8 x 25, 8.8,
24	417006	2	PLUG,

07.214(01) HYDRAULIC TUBES, FOR HYDRAULIC DRIVEN REVERSING SYSTEM AND LATERAL FLOTATION

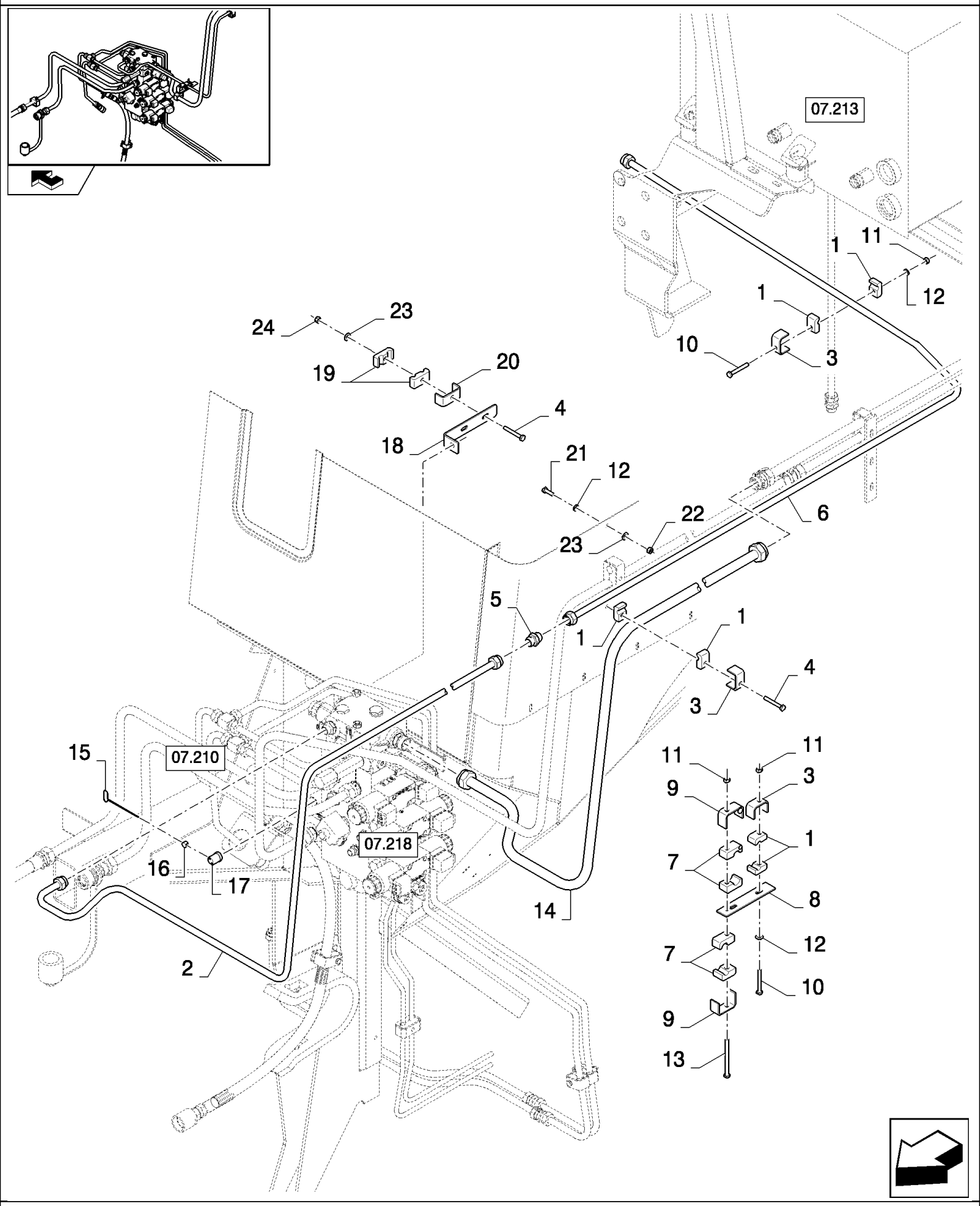

CSX7080 C659 - COMBINE (9/06-8/08)

07.214(01) HYDRAULIC TUBES, FOR HYDRAULIC DRIVEN REVERSING SYSTEM AND LATERAL FLOTATION

ссылка	Номер детали	Кол-во	Описание
1	433008	14	CLAMP,
2	87344921	1	TUBE, HYD,
3	442340	7	SUPPORT,
4	86977790	6	SCREW, Hex, M6 x 45, 8.8,
5	150018	1	CONNECTOR, HYD.,
6	84438785	1	TUBE,
7	433007	6	CLAMP,
8	919316	1	SUPPORT,
9	433100	3	SUPPORT,
10	120056	3	SCREW, Hex, M6 x 50, 8.8,
11	412152	9	NUT, LOCK, M6 x 1, Cl 8.8,
12	86588450	9	WASHER, M6,
13	86508570	1	SCREW, Hex, M6 x 80, 8.8,
14	87344923	1	TUBE, HYD,
15	350235	2	WIRE, RETAINING,
16	350006	2	SCREW,
17	84042643	2	COVER, CAP,
18	87742748	1	SUPPORT,
19	430357	2	CLAMP,
20	431941	1	SUPPORT,
21	120100	2	BOLT, Hex, M6 x 20, 8.8,
22	9706755	2	NUT, M6, Cl 8,
23	322357	3	WASHER, SPRING, Belleville, M6,
24	353308	1	NUT, M6 x 1, Cl 8,

07.215(01) HYDRAULICS TO STRAW ELEVATOR, QUICK COUPLER

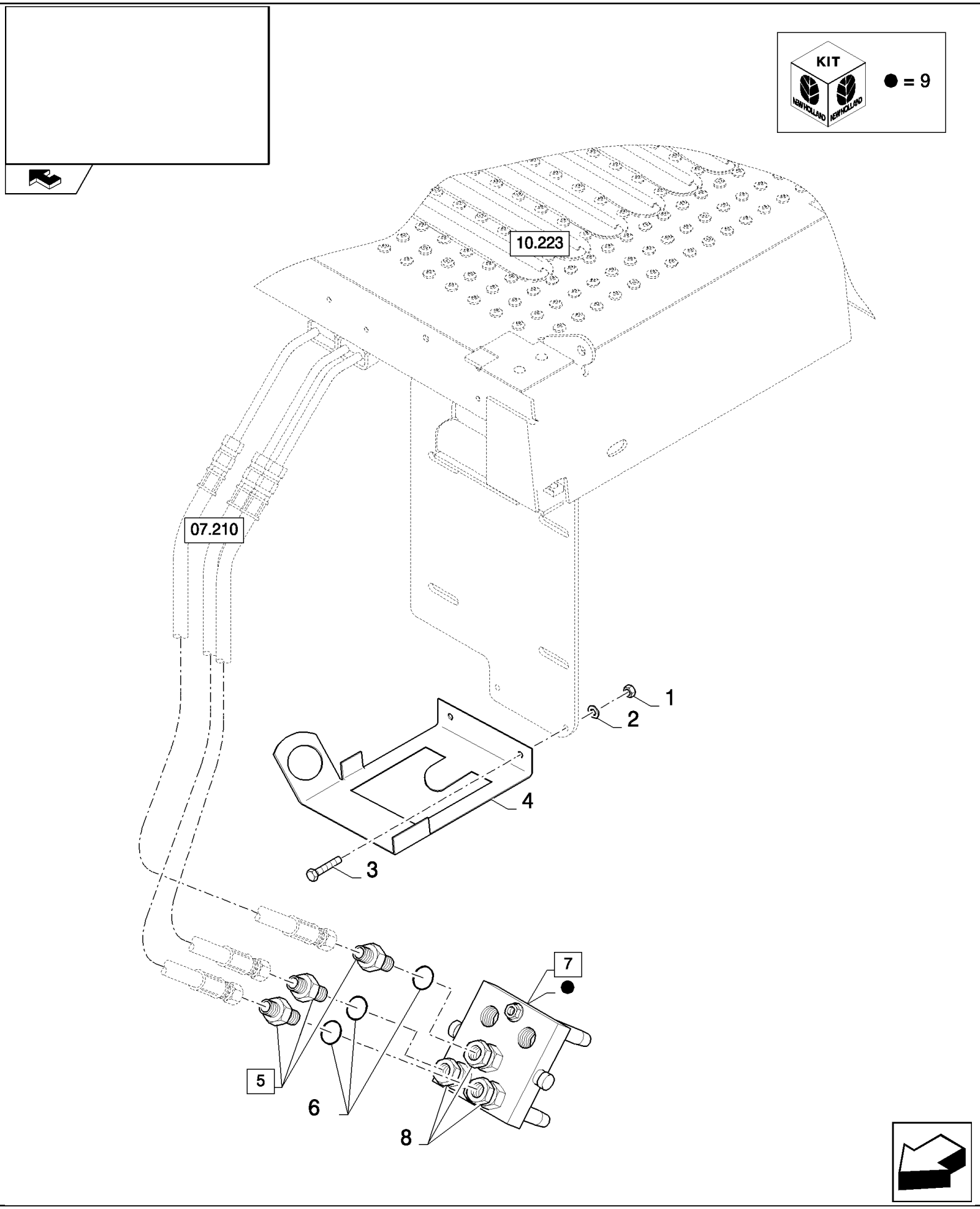

CSX7080 C659 - COMBINE (9/06-8/08)

07.215(01) HYDRAULICS TO STRAW ELEVATOR, QUICK COUPLER

ссылка	Номер детали	Кол-во	Описание
1	9706690	2	NUT, M8, Cl 8,
2	322358	2	WASHER, SPRING, Belleville, M8,
3	43127	2	BOLT, Hex, M8 x 25, 8.8,
4	84459469	1	BRACKET,
5	84077400	3	CONNECTOR, HYD., (6)
6	9617873	3	O-RING, 6-1, 90 Duro, .468" ID x .078" Thk,
7	84435011	1	COUPLING, QUICK, MALE, (8, 9)
8	84435504	3	CONNECTOR, HYD.,
9	86623900	1	KIT, REPAIR,

07.218(C 01) HYDRAULIC TUBES, FOR HYDRAULIC DRIVEN REVERSING SYSTEM - C543

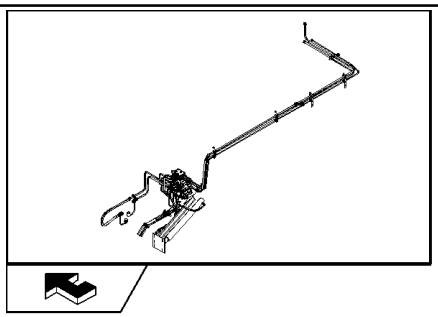

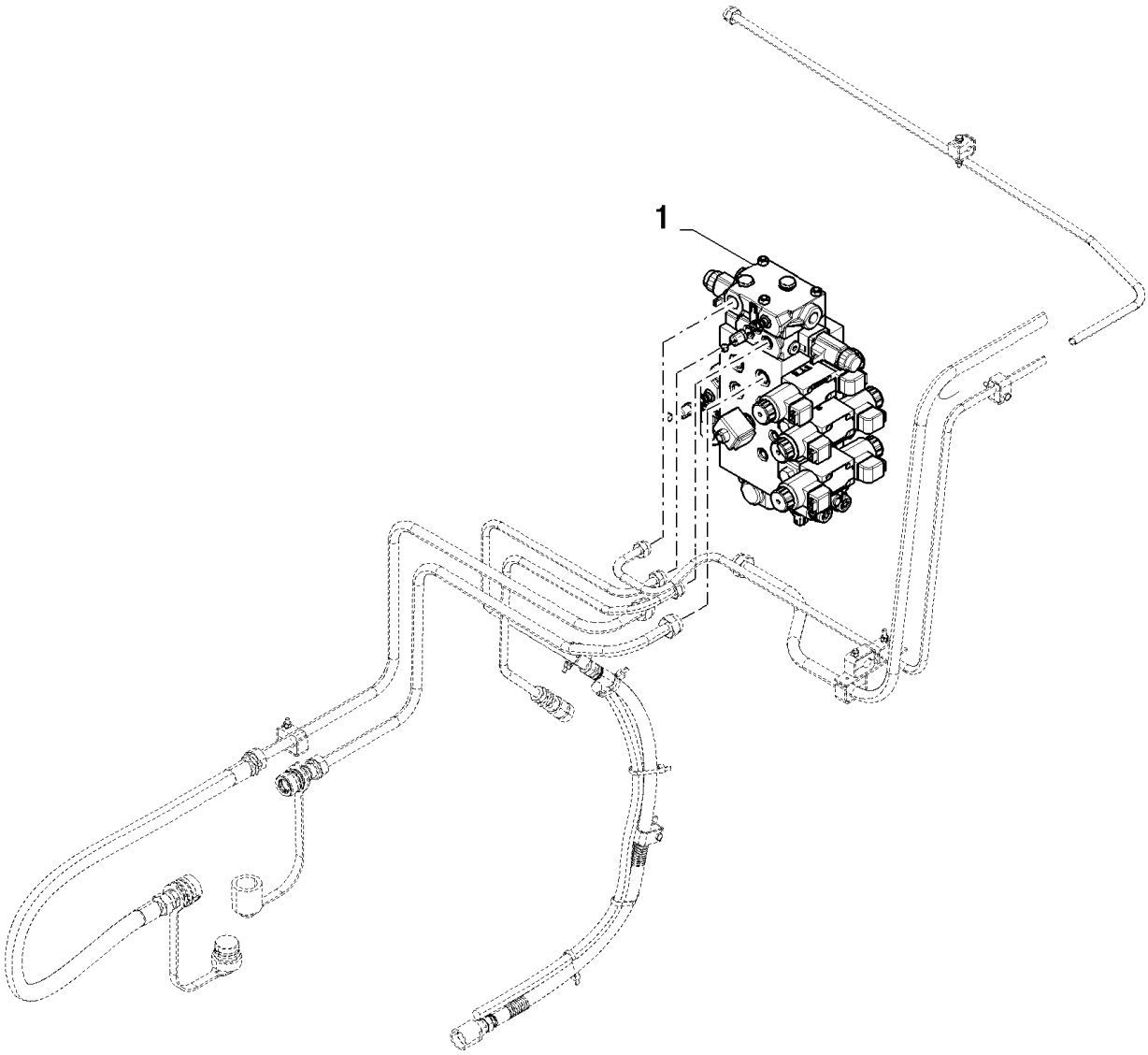

CSX7080 C659 - COMBINE (9/06-8/08)

07.218(C 01) HYDRAULIC TUBES, FOR HYDRAULIC DRIVEN REVERSING SYSTEM - C543

ссылка	Номер детали	Кол-во	Описание
1	87376589	1	VALVE, HYDRAULIC, , NO SUBPARTS YET AVAILABLE

07.218(D 01) MAIN STACK VALVE, FOR HYDRAULIC DRIVEN REVERSING SYSTEM AND LATERAL FLOTATION - D544

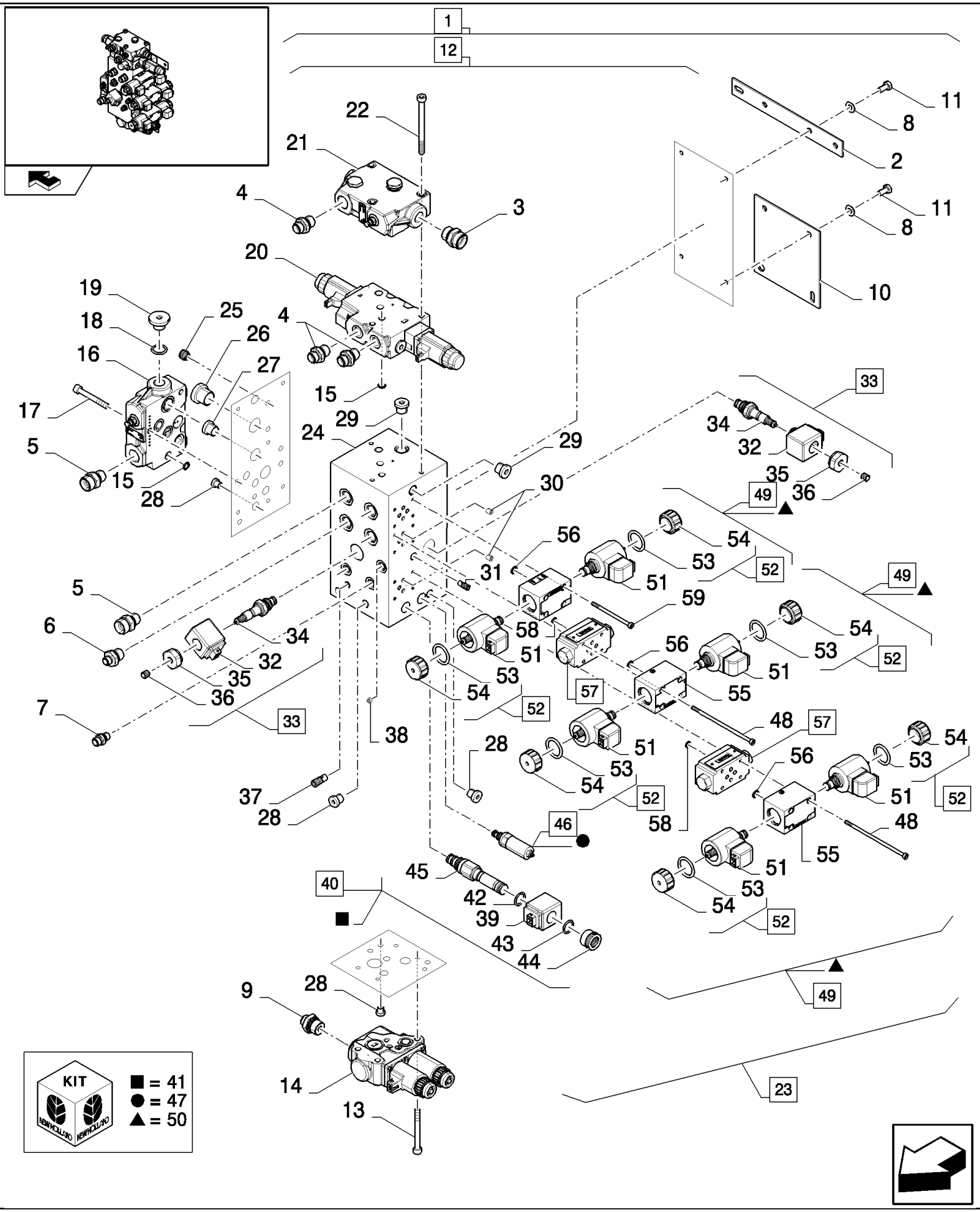

CSX7080 C659 - COMBINE (9/06-8/08)

07.218(D 01) MAIN STACK VALVE, FOR HYDRAULIC DRIVEN REVERSING SYSTEM AND LATERAL FLOTATION - D544

ссылка	Номер детали	Кол-во	Описание
1	87563404	1	VALVE, HYDRAULIC, (2 to 59)
2	87346038	1	SUPPORT,
3	87343790	1	FITTING,
4	9850317	3	CONNECTOR, HYD.,
5	87343789	3	FITTING,
6	87343788	2	FITTING,
7	9850318	3	CONNECTOR, HYD.,
8	322358	4	WASHER, SPRING, Belleville, M8,
9	84461871	1	FITTING,
10	87346040	1	SUPPORT,
11	120103	4	BOLT, Hex, M8 x 16, 8.8,
12	87376589	1	VALVE, HYDRAULIC, (13 to 59)
13	87657975	3	SCREW,
14	87326754	1	VALVE, HYDRAULIC,
15	87658219	2	SHIM,
16	87661482	1	BLOCK, CONNECTING,
17	NSS	3	NOT SERVICED SEPARATELY, M8x60
18	87661484	1	O-RING,
19	NSS	1	NOT SERVICED SEPARATELY,
20	87658224	1	VALVE, FLOAT,
21	87661482	1	BLOCK, CONNECTING,
22	NSS	3	NOT SERVICED SEPARATELY, M8x100
23	NSS	1	NOT SERVICED SEPARATELY, (24 to 59)
24	NSS	1	NOT SERVICED SEPARATELY,
25	87661481	1	VALVE, CHECK,
26	NSS	1	NOT SERVICED SEPARATELY,
27	NSS	3	NOT SERVICED SEPARATELY,
28	NSS	10	NOT SERVICED SEPARATELY,
29	NSS	2	NOT SERVICED SEPARATELY,
30	NSS	2	NOT SERVICED SEPARATELY,
31	NSS	1	NOT SERVICED SEPARATELY,
32	87658214	2	COIL,
33	87657860	2	POPPET, VALVE, (34 to 36)
34	NSS	1	NOT SERVICED SEPARATELY,
35	NSS	1	NOT SERVICED SEPARATELY,
36	NSS	1	NOT SERVICED SEPARATELY,
37	87657061	1	VALVE,
38	87661480	1	PLUG,
39	87657064	1	SOLENOID,
40	87657065	1	VALVE, (41 to 45)
41	87657066	1	KIT, SEALS,
42	NSS	1	NOT SERVICED SEPARATELY,
43	87657067	1	O-RING,
44	87657068	1	NUT,

07.218(D 01) MAIN STACK VALVE, FOR HYDRAULIC DRIVEN REVERSING SYSTEM AND LATERAL FLOTATION - D544

ссылка	Номер детали	Кол-во	Описание
45	NSS	1	NOT SERVICED SEPARATELY,
46	87657059	1	VALVE, PRESSURE RELIEF, (47)
47	87657060	1	KIT, SEALS,
48	NSS	4	NOT SERVICED SEPARATELY, M5x90
49	87657069	3	VALVE, (50 to 56)
50	87657859	1	KIT, SEALS,
51	87657856	2	COIL,
52	87657858	2	NUT, (53, 54)
53	NSS	1	NOT SERVICED SEPARATELY,
54	NSS	1	NOT SERVICED SEPARATELY,
55	NSS	1	NOT SERVICED SEPARATELY,
56	NSS	4	NOT SERVICED SEPARATELY,
57	87657866	2	VALVE, CHECK, (58)
58	87657867	4	O-RING,
59	NSS	4	NOT SERVICED SEPARATELY, M5x50

07.218(E 01) MAIN STACK VALVE, FOR HYDRAULIC DRIVEN REVERSING SYSTEM AND LATERAL FLOTATION

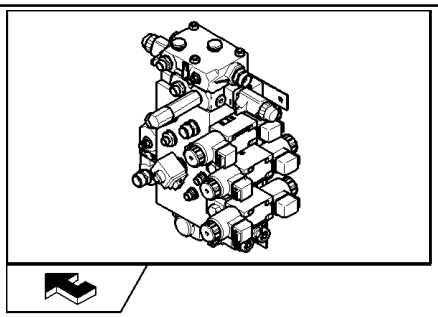

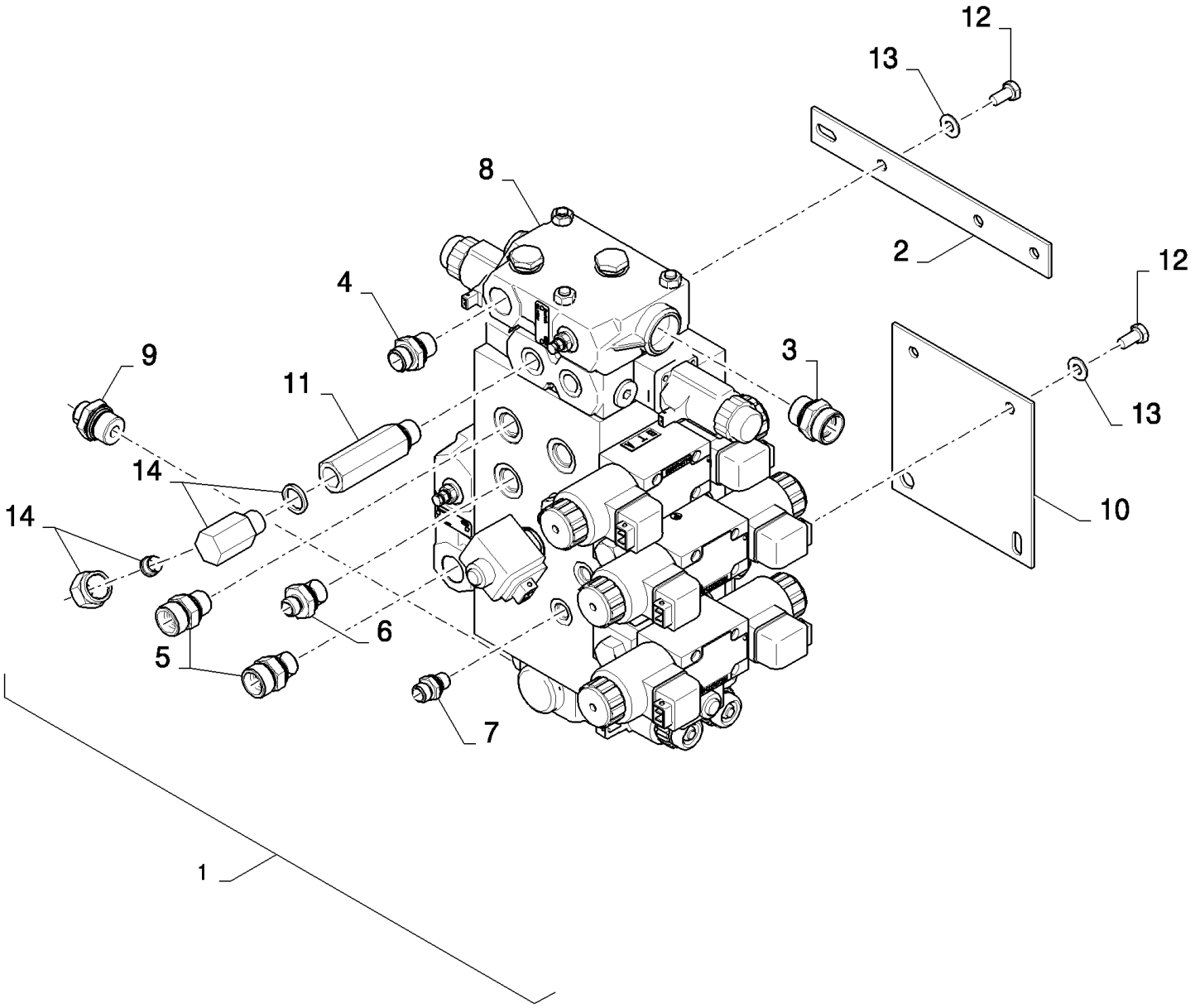

CSX7080 C659 - COMBINE (9/06-8/08)

07.218(E 01) MAIN STACK VALVE, FOR HYDRAULIC DRIVEN REVERSING SYSTEM AND LATERAL FLOTATION

ссылка	Номер детали	Кол-во	Описание
1	87747027	1	VALVE, HYDRAULIC, (1 to 15)
2	87346038	1	SUPPORT,
3	87343790	1	FITTING,
4	9850317	2	CONNECTOR, HYD.,
5	87343789	3	FITTING,
6	87343788	2	FITTING,
7	9850318	3	CONNECTOR, HYD.,
8	87376589	1	VALVE, HYDRAULIC,
9	84461871	1	FITTING,
10	87346040	1	SUPPORT,
11	87747028	1	NIPPLE, LUBE,
12	120103	4	BOLT, Hex, M8 x 16, 8.8,
13	322358	4	WASHER, SPRING, Belleville, M8,
14	84023314	1	VALVE, HYDRAULIC,
15	402208	1	

07.218(F 01) MAIN STACK VALVE, FOR HYDRAULIC DRIVEN REVERSING SYSTEM AND LATERAL FLOTATION

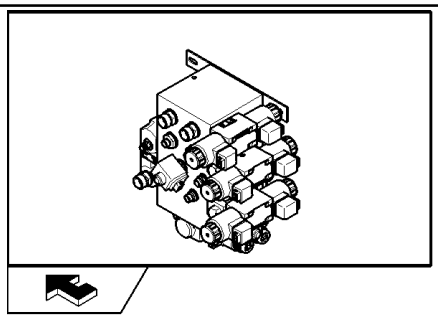

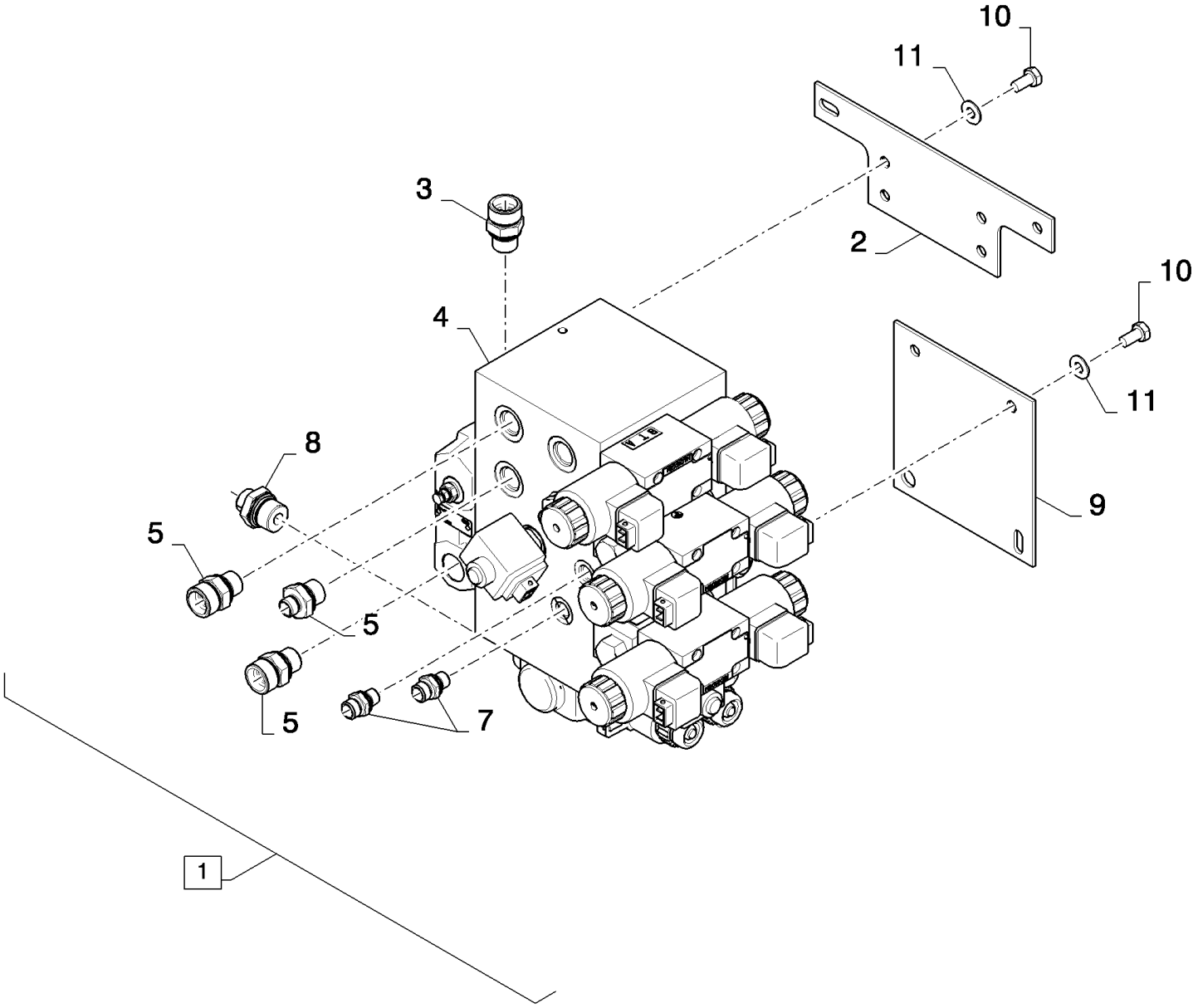

CSX7080 C659 - COMBINE (9/06-8/08)

07.218(F 01) MAIN STACK VALVE, FOR HYDRAULIC DRIVEN REVERSING SYSTEM AND LATERAL FLOTATION

ссылка	Номер детали	Кол-во	Описание
1	87570982	1	VALVE, HYDRAULIC, (2 to 11)
2	87564777	1	SUPPORT,
3	87343790	1	FITTING,
4	87399058	1	VALVE, HYDRAULIC,
5	87343789	3	FITTING,
6	87343788	2	FITTING,
7	9850318	3	CONNECTOR, HYD.,
8	84461871	1	FITTING,
9	87346040	1	SUPPORT,
10	120103	4	BOLT, Hex, M8 x 16, 8.8,
11	322358	4	WASHER, SPRING, Belleville, M8,

07.220(B 01) HYDROSTATIC LINES, FOR 130CC - 100CC

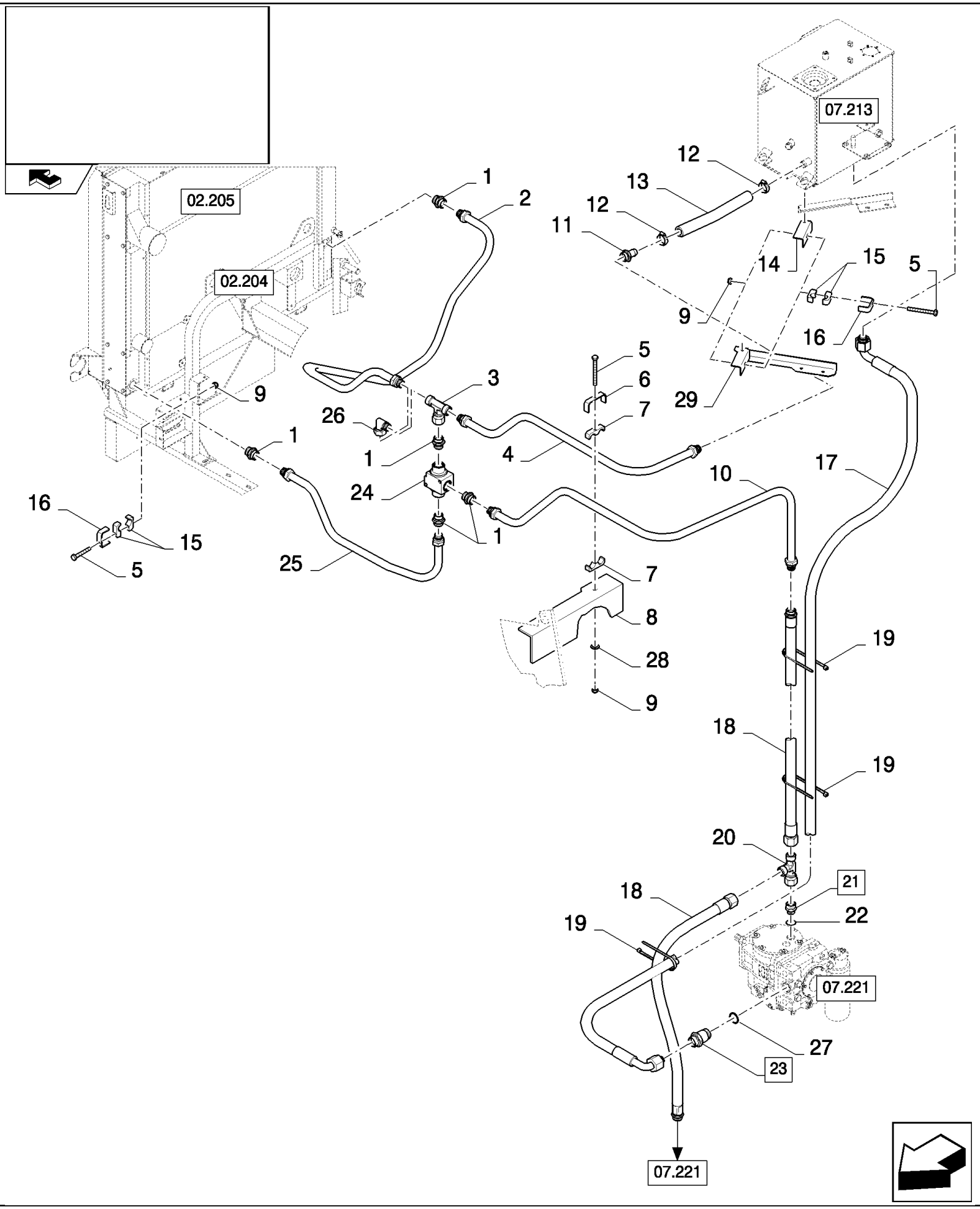

CSX7080 C659 - COMBINE (9/06-8/08)

07.220(B 01) HYDROSTATIC LINES, FOR 130CC - 100CC

ссылка	Номер детали	Кол-во	Описание
1	84074173	5	CONNECTOR, HYD.,
2	87370669	1	TUBE, HYD, , BSN C599
2	87675300	1	TUBE, HYD, , ASN D600
3	84041626	1	CONNECTION, 3 WAY,
4	87356325	1	TUBE, HYD,
5	86508569	4	BOLT, Hex, M6 x 70, 8.8, M6x70
6	743320	1	SUPPORT,
7	457547	2	CLAMP,
8	87358195	1	SUPPORT,
9	353308	4	NUT, M6 x 1, Cl 8,
10	87356327	1	TUBE, HYD,
11	457544	1	CONNECTOR, HYD.,
12	382527	2	CLAMP, HOSE,
13	87357933	1	HOSE,
14	87358153	1	BRACKET, , BSN C559
15	457546	6	CLAMP,
16	743318	3	SUPPORT,
17	84320648	1	HOSE, FLEXIBLE,
18	9511017	2	HOSE,
19	396718	3	STRAP,
20	9507672	1	CONNECTION, 3 WAY,
21	9818287	1	CONNECTOR, HYD., (22)
22	167266	1	O-RING, 12-1, 90 Duro, .924 ID x .116" Thk,
23	9811842	1	CONNECTOR, HYD., (28)
24	84074158	1	THERMOSTAT,
25	87370667	1	TUBE, HYD, , BSN C599
25	87675298	1	TUBE, HYD, , ASN D600
26	86588450	1	WASHER, M6,
27	457573	1	ELBOW, , BSN C599
28	570186	1	O-RING, 20-1, 90 Duro, 1.475" ID x .116" Thk,
29	87601996	1	SUPPORT, , ASN D560

07.220(E 01) HYDROSTATIC LINES, FOR 130CC - 130CC

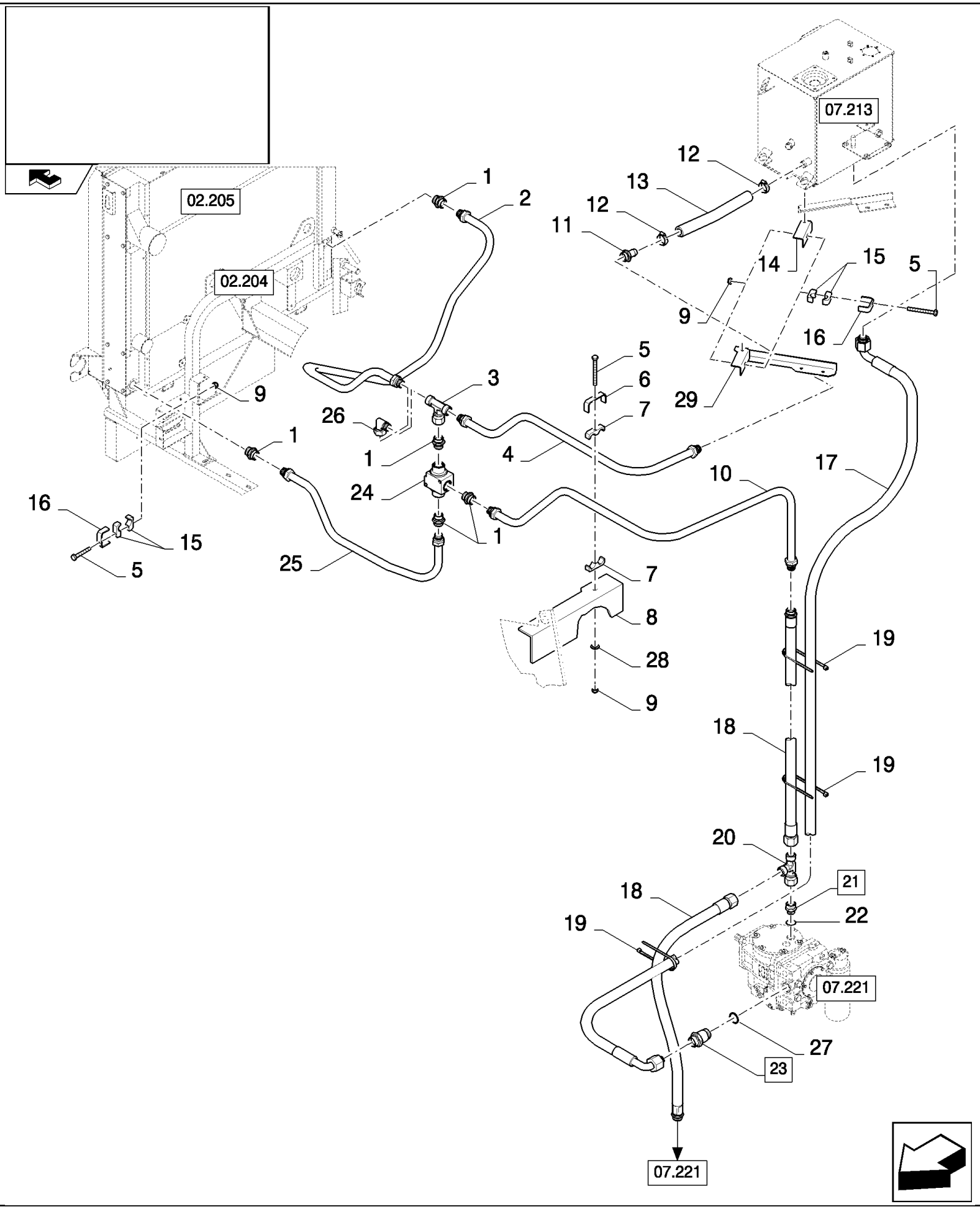

CSX7080 C659 - COMBINE (9/06-8/08)

07.220(E 01) HYDROSTATIC LINES, FOR 130CC - 130CC

ссылка	Номер детали	Кол-во	Описание
1	84074173	5	CONNECTOR, HYD.,
2	87370669	1	TUBE, HYD,
3	84041626	1	CONNECTION, 3 WAY,
4	87356325	1	TUBE, HYD,
5	86508569	3	BOLT, Hex, M6 x 70, 8.8, M6x70
6	743320	1	SUPPORT,
7	457547	2	CLAMP,
8	87358195	1	SUPPORT,
9	353308	3	NUT, M6 x 1, Cl 8,
10	87356327	1	TUBE, HYD,
11	457544	1	CONNECTOR, HYD.,
12	382527	2	CLAMP, HOSE,
13	87357933	1	HOSE,
14	87358153	1	BRACKET, , BSN C559
15	457546	4	CLAMP,
16	743318	2	SUPPORT,
17	84320648	1	HOSE, FLEXIBLE,
18	9511017	2	HOSE,
19	396718	4	STRAP,
20	9507672	1	CONNECTION, 3 WAY,
21	9818287	1	CONNECTOR, HYD., (22)
22	167266	1	O-RING, 12-1, 90 Duro, .924 ID x .116" Thk,
23	89811842	1	CONNECTOR, HYD., (27)
24	84074158	1	THERMOSTAT,
25	87370667	1	TUBE, HYD,
26	86588450	1	WASHER, M6,
27	570186	1	O-RING, 20-1, 90 Duro, 1.475" ID x .116" Thk,
28	457573	1	ELBOW,
29	87601996	1	SUPPORT, , ASN D560

07.220(H 01) HYDROSTATIC LINES, FOR 130CC - 130CC - FOR LATERALE ONLY

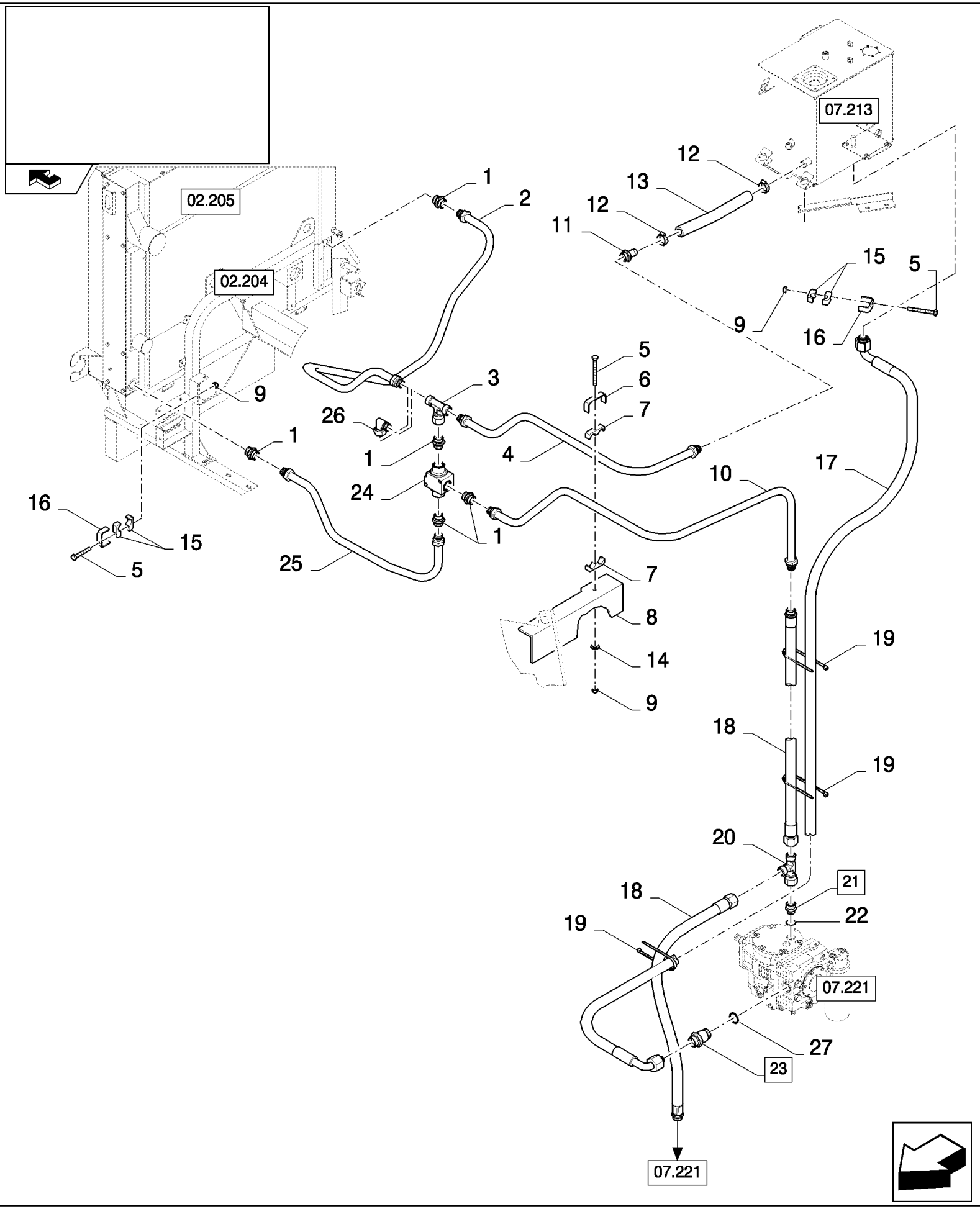

CSX7080 C659 - COMBINE (9/06-8/08)

07.220(H 01) HYDROSTATIC LINES, FOR 130CC - 130CC - FOR LATERALE ONLY

ссылка	Номер детали	Кол-во	Описание
1	84074173	5	CONNECTOR, HYD.,
2	87370669	1	TUBE, HYD,
3	84041626	1	CONNECTION, 3 WAY,
4	87356325	1	TUBE, HYD,
5	86508569	3	BOLT, Hex, M6 x 70, 8.8, M6x70
6	743320	1	SUPPORT,
7	457547	2	CLAMP,
8	87358195	1	SUPPORT,
9	353308	4	NUT, M6 x 1, Cl 8,
10	87356327	1	TUBE, HYD,
11	457544	1	CONNECTOR, HYD.,
12	382527	2	CLAMP, HOSE,
13	87357933	1	HOSE,
14	457573	1	ELBOW,
15	457546	4	CLAMP,
16	743318	2	SUPPORT,
17	84320648	1	HOSE, FLEXIBLE,
18	9511017	2	HOSE,
19	396718	4	STRAP,
20	9507672	1	CONNECTION, 3 WAY,
21	9818287	1	CONNECTOR, HYD., (22)
22	167266	1	O-RING, 12-1, 90 Duro, .924 ID x .116" Thk,
23	9811842	1	CONNECTOR, HYD., (27)
24	84074158	1	THERMOSTAT,
25	87370667	1	TUBE, HYD,
26	86588450	1	WASHER, M6,
27	570186	1	O-RING, 20-1, 90 Duro, 1.475" ID x .116" Thk,

07.221(B 01) HYDROSTATIC LINES, FOR 130CC - 100CC

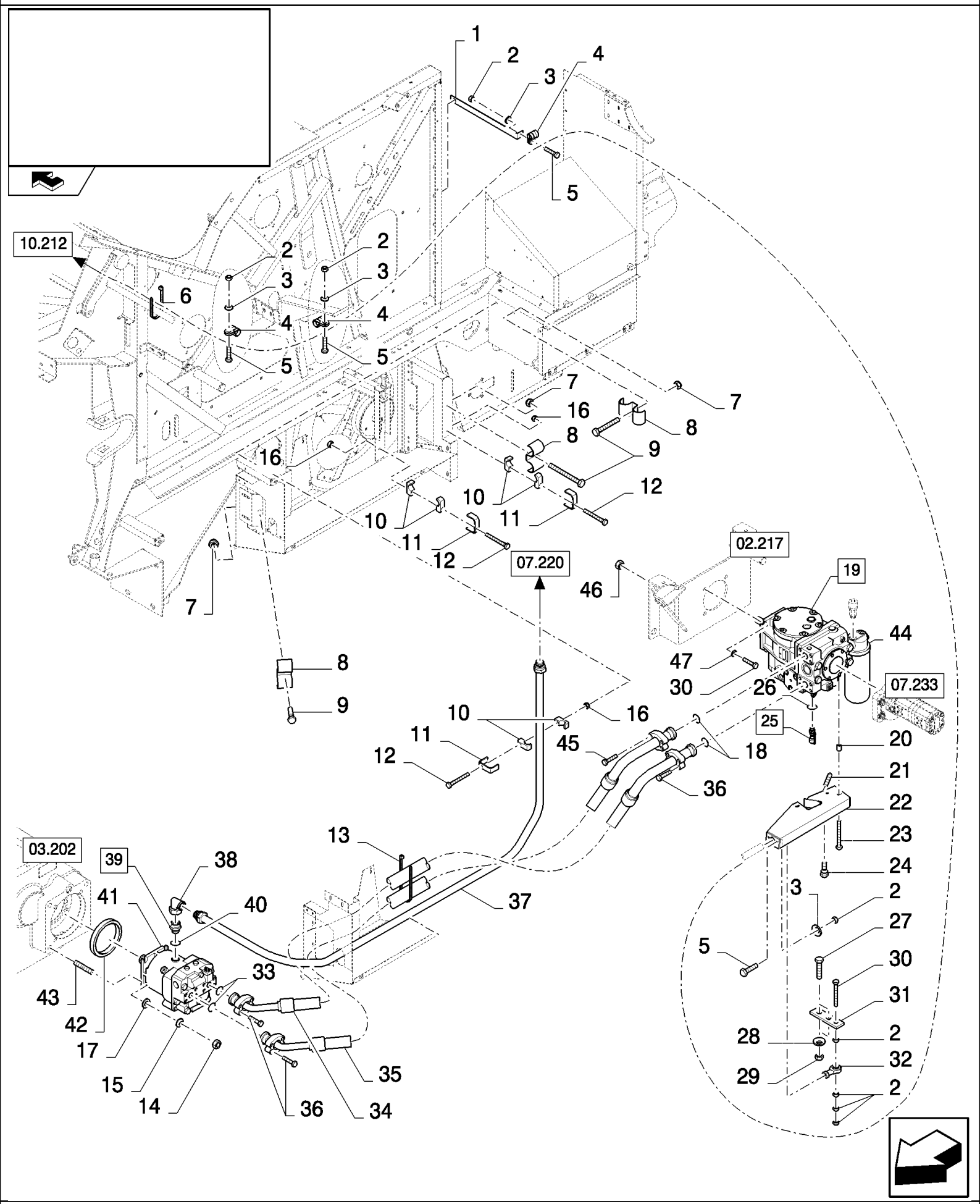

CSX7080 C659 - COMBINE (9/06-8/08)

07.221(B 01) HYDROSTATIC LINES, FOR 130CC - 100CC

ссылка	Номер детали	Кол-во	Описание
1	84435557	1	SUPPORT,
2	9706755	8	NUT, M6, Cl 8,
3	322357	5	WASHER, SPRING, Belleville, M6,
4	335021	3	CLAMP,
5	120100	5	BOLT, Hex, M6 x 20, 8.8,
6	323597	2	STRAP, CABLE, M9 x 165 or M5 x 197,
7	86629542	3	NUT, LOCK, M8 x 1.25, Cl 8,
8	84435979	3	CLAMP,
9	86977784	3	SCREW, M8x60
10	457546	4	CLAMP,
11	743318	2	SUPPORT,
12	86508569	2	BOLT, Hex, M6 x 70, 8.8, M6x70
13	396718	2	STRAP,
14	9706685	4	NUT, M12, Cl 8,
15	140046	4	WASHER, Belleville, M12,
16	353308	3	NUT, M6 x 1, Cl 8,
17	140086	4	WASHER, 14MM
18	14464080	2	O-RING, -222, 70 Duro, 1.484" ID x .139" Thk,
19	84607544	1	PUMP, HYDROSTATIC, (44)
20	9837216	3	RING,
21	84076895	1	SET SCREW, Hex Soc, M10 x 50,
22	84433228	1	SUPPORT,
23	9850685	3	BOLT, Hex, M6 x 90, 8.8, M6x90
24	412665	1	SCREW,
25	84021707	1	CONNECTOR, HYD., (26)
26	9617873	1	O-RING, 6-1, 90 Duro, .468" ID x .078" Thk,
27	43127	2	BOLT, Hex, M8 x 25, 8.8,
28	322358	2	WASHER, SPRING, Belleville, M8,
29	9706690	2	NUT, M8, Cl 8,
30	120090	4	SCREW, Hex, M16 x 50, 8.8,
31	89819078	1	LEVER,
32	750157	1	BALL JOINT,
33	353108	2	O-RING, -219, 70 Duro, 1.296" ID x .139" Thk,
34	84447588	1	HOSE, FLEXIBLE,
35	84447589	1	HOSE, FLEXIBLE,
36	84015552	8	BOLT, Hex, 7/16"-14 x 1/2", 12.9,
37	84433034	1	TUBE, HYD,
38	457573	1	ELBOW,
39	9511910	1	CONNECTOR, HYD., (40)
40	167266	1	O-RING, 12-1, 90 Duro, .924 ID x .116" Thk,
41	84800587	1	MOTOR, HYDROSTATIC,
42	84071765	1	RING,
43	84818315	4	STUD,
44	84031880	1	FILTER, ELEMENT,

CSX7080 C659 - COMBINE (9/06-8/08)

07.221(B 01) HYDROSTATIC LINES, FOR 130CC - 100CC

ссылка	Номер детали	Кол-во	Описание
45	84015554	8	BOLT, Hex, 1/2"-13 x 1 3/4", 12.9,
46	100020	4	NUT, M16, Cl 8,
47	84058945	4	WASHER,

07.221(E 01) HYDROSTATIC LINES, FOR 130CC - 130CC

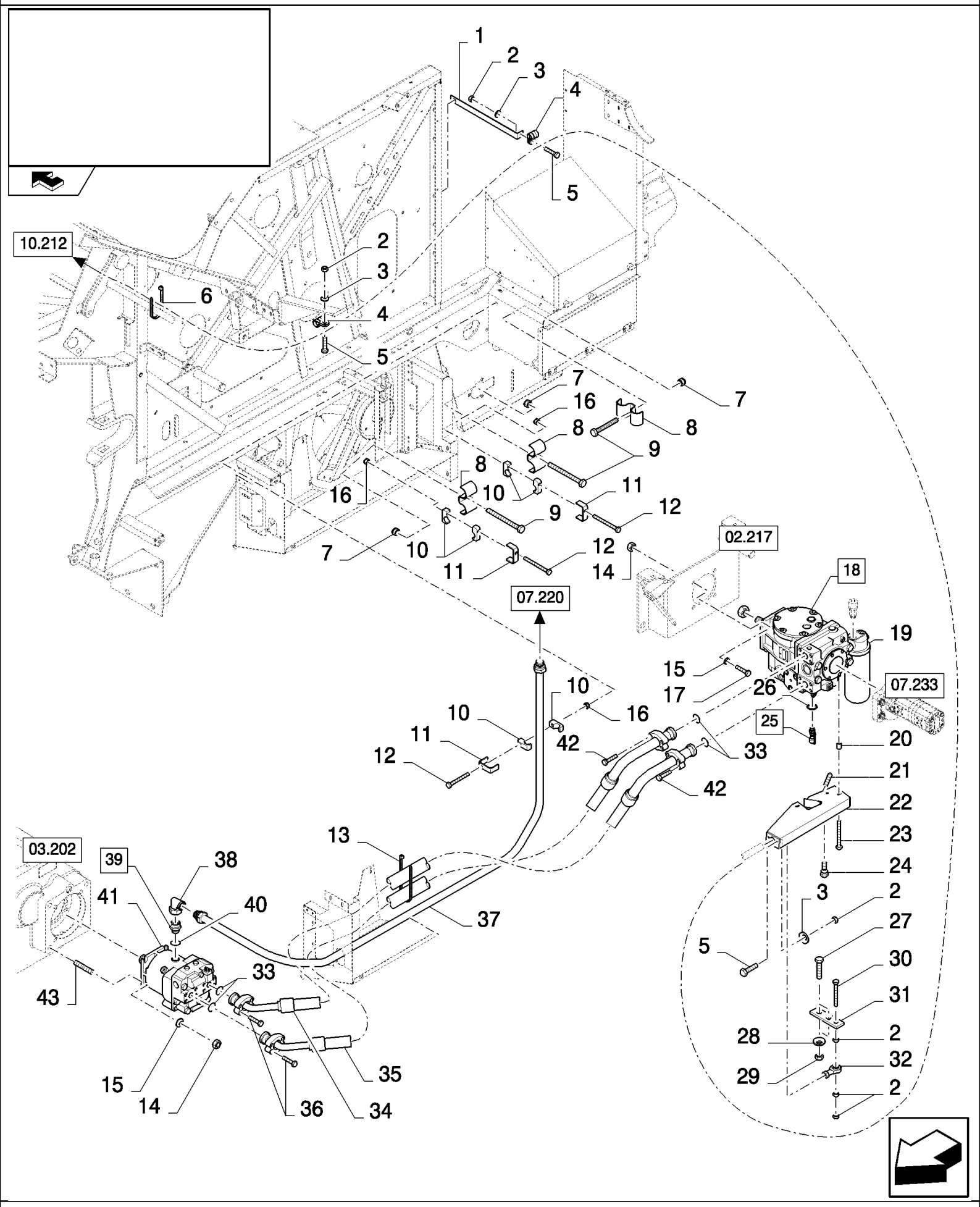

CSX7080 C659 - COMBINE (9/06-8/08)

07.221(E 01) HYDROSTATIC LINES, FOR 130CC - 130CC

ссылка	Номер детали	Кол-во	Описание
1	84435557	1	SUPPORT,
2	9706755	7	NUT, M6, Cl 8,
3	322357	4	WASHER, SPRING, Belleville, M6,
4	335021	2	CLAMP,
5	120100	4	BOLT, Hex, M6 x 20, 8.8,
6	323597	2	STRAP, CABLE, M9 x 165 or M5 x 197,
7	86629542	3	NUT, LOCK, M8 x 1.25, Cl 8,
8	84435979	3	CLAMP,
9	86977784	3	SCREW, M8x60
10	457546	6	CLAMP,
11	743318	2	SUPPORT,
12	86508569	3	BOLT, Hex, M6 x 70, 8.8, M6x70
13	396718	2	STRAP,
14	100020	8	NUT, M16, Cl 8,
15	84058945	8	WASHER,
16	353308	3	NUT, M6 x 1, Cl 8,
17	120090	4	SCREW, Hex, M16 x 50, 8.8,
18	84607544	1	PUMP, HYDROSTATIC, (19)
19	84031880	1	FILTER, ELEMENT,
20	9837216	3	RING,
21	84076895	1	SET SCREW, Hex Soc, M10 x 50,
22	84433228	1	SUPPORT,
23	89850685	3	SCREW, M6x90
24	412665	1	SCREW,
25	84021707	1	CONNECTOR, HYD., (26)
26	9617873	1	O-RING, 6-1, 90 Duro, .468" ID x .078" Thk,
27	43127	2	BOLT, Hex, M8 x 25, 8.8,
28	322358	2	WASHER, SPRING, Belleville, M8,
29	9706690	2	NUT, M8, Cl 8,
30	120101	1	BOLT, Hex, M6 x 30, 8.8, Full Thd,
31	89819078	1	LEVER,
32	750157	1	BALL JOINT,
33	14464080	4	O-RING, -222, 70 Duro, 1.484" ID x .139" Thk,
34	87526097	1	HOSE, FLEXIBLE,
35	87526101	1	HOSE, FLEXIBLE,
36	84015554	16	BOLT, Hex, 1/2"-13 x 1 3/4", 12.9,
37	87525989	1	TUBE, HYD,
38	84320920	1	ELBOW,
39	9818287	1	CONNECTOR, HYD., (40)
40	167266	1	O-RING, 12-1, 90 Duro, .924 ID x .116" Thk,
41	84819681	1	MOTOR, HYDROSTATIC,
42	84015554	8	BOLT, Hex, 1/2"-13 x 1 3/4", 12.9,
43	110030	4	STUD,

07.221(G 01) HYDROSTATIC LINES, FOR 130CC - 130CC - FOR LATERALE ONLY

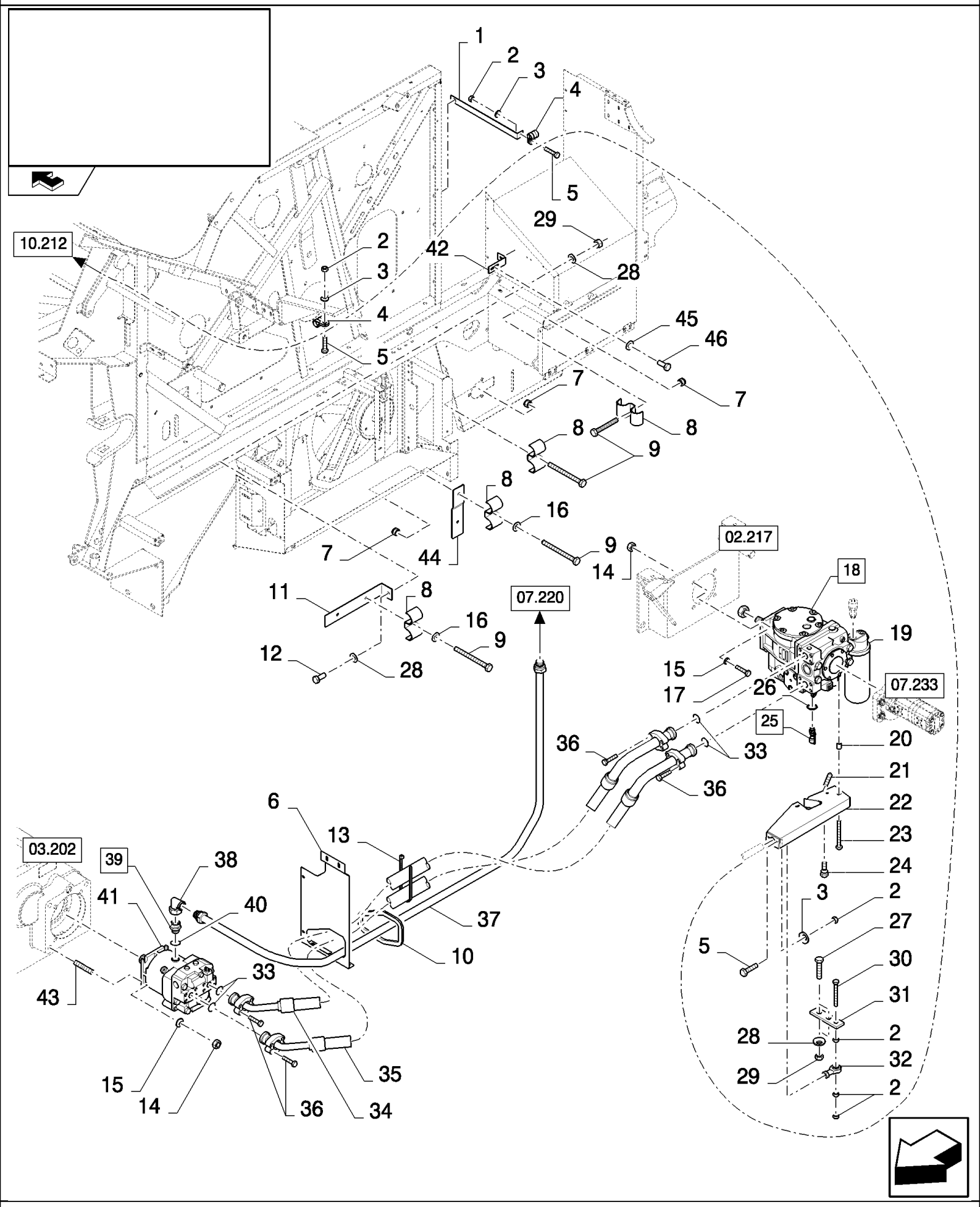

CSX7080 C659 - COMBINE (9/06-8/08)

07.221(G 01) HYDROSTATIC LINES, FOR 130CC - 130CC - FOR LATERALE ONLY

ссылка	Номер детали	Кол-во	Описание
1	87743112	1	SUPPORT,
2	9706755	5	NUT, M6, Cl 8,
3	322357	7	WASHER, SPRING, Belleville, M6, , BSN C614
3	322357	14	WASHER, SPRING, Belleville, M6, , ASN D615
4	335021	3	CLAMP,
5	120100	4	BOLT, Hex, M6 x 20, 8.8, , BSN C614
5	120100	5	BOLT, Hex, M6 x 20, 8.8, , ASN D615
6	87742044	1	PLATE,
7	86629542	3	NUT, LOCK, M8 x 1.25, Cl 8,
8	84444101	3	CLAMP,
9	86977784	3	SCREW, M8x60
10	401108	1	SHIELD, L=0,48M
11	87743467	1	SUPPORT,
12	120104	2	SCREW, Hex, M8 x 20, 8.8, M6x70, BSN C614
12	120104	3	SCREW, Hex, M8 x 20, 8.8, , ASN D615
13	396718	2	STRAP,
14	100020	8	NUT, M16, Cl 8,
15	84058945	8	WASHER,
16	86624184	3	WASHER, M8 x 16 x 1.6, , BSN C614
16	86624184	5	WASHER, M8 x 16 x 1.6, , ASN D615
17	412185	4	BOLT, CARRIAGE, Short NK, M16 x 50, Cl8.8, Full Thd,
18	84607544	1	PUMP, HYDROSTATIC, (19)
19	87601458	1	PUMP, HYDROSTATIC,
20	87748507	3	BUSHING, , BSN C614
20	87488795	1	LEVER, , ASN D615
21	84076895	1	SET SCREW, Hex Soc, M10 x 50,
22	87747384	1	SUPPORT, , BSN C614
22	87486809	1	SUPPORT, , ASN D615
23	89850685	3	SCREW, M6x90, BSN C614
23	86977786	1	BOLT, Hex, M6 x 25, 8.8, , ASN D615
24	412665	1	SCREW,
25	84021707	3	CONNECTOR, HYD., (26)
26	9617873	1	O-RING, 6-1, 90 Duro, .468" ID x .078" Thk,
27	43127	2	BOLT, Hex, M8 x 25, 8.8,
28	322358	7	WASHER, SPRING, Belleville, M8, , BSN C614
28	322358	11	WASHER, SPRING, Belleville, M8, , ASN D615
29	9706690	4	NUT, M8, Cl 8, , BSN C614
29	9706690	5	NUT, M8, Cl 8, , ASN D615
30	120101	1	BOLT, Hex, M6 x 30, 8.8, Full Thd, , BSN C614
31	9819078	1	LEVER, , BSN C614
31	87344927	1	BRACKET, , ASN D615
32	750157	1	BALL JOINT,
33	14464080	4	O-RING, -222, 70 Duro, 1.484" ID x .139" Thk,
34	87714440	1	HOSE, FLEXIBLE,

CSX7080 C659 - COMBINE (9/06-8/08)

07.221(G 01) HYDROSTATIC LINES, FOR 130CC - 130CC - FOR LATERALE ONLY

ссылка	Номер детали	Кол-во	Описание
35	87714498	1	HOSE, FLEXIBLE,
36	84015554	16	BOLT, Hex, 1/2"-13 x 1 3/4", 12.9,
37	87714499	1	TUBE, HYD,
38	457573	1	ELBOW,
39	84443963	1	CONNECTOR, HYD., (40)
40	167266	1	O-RING, 12-1, 90 Duro, .924 ID x .116" Thk,
41	84819681	1	MOTOR, HYDROSTATIC,
42	87743469	8	SUPPORT,
43	110030	4	STUD,
44	87745830	1	SUPPORT,
45	86625263	1	WASHER, M8 x 20 x 1.6,
46	86508569	1	BOLT, Hex, M6 x 70, 8.8, , BSN C614
46	86508569	4	BOLT, Hex, M6 x 70, 8.8, , ASN D615

07.222(01) STEERING VALVE - FOR ADJUSTABLE STEERING AXLE

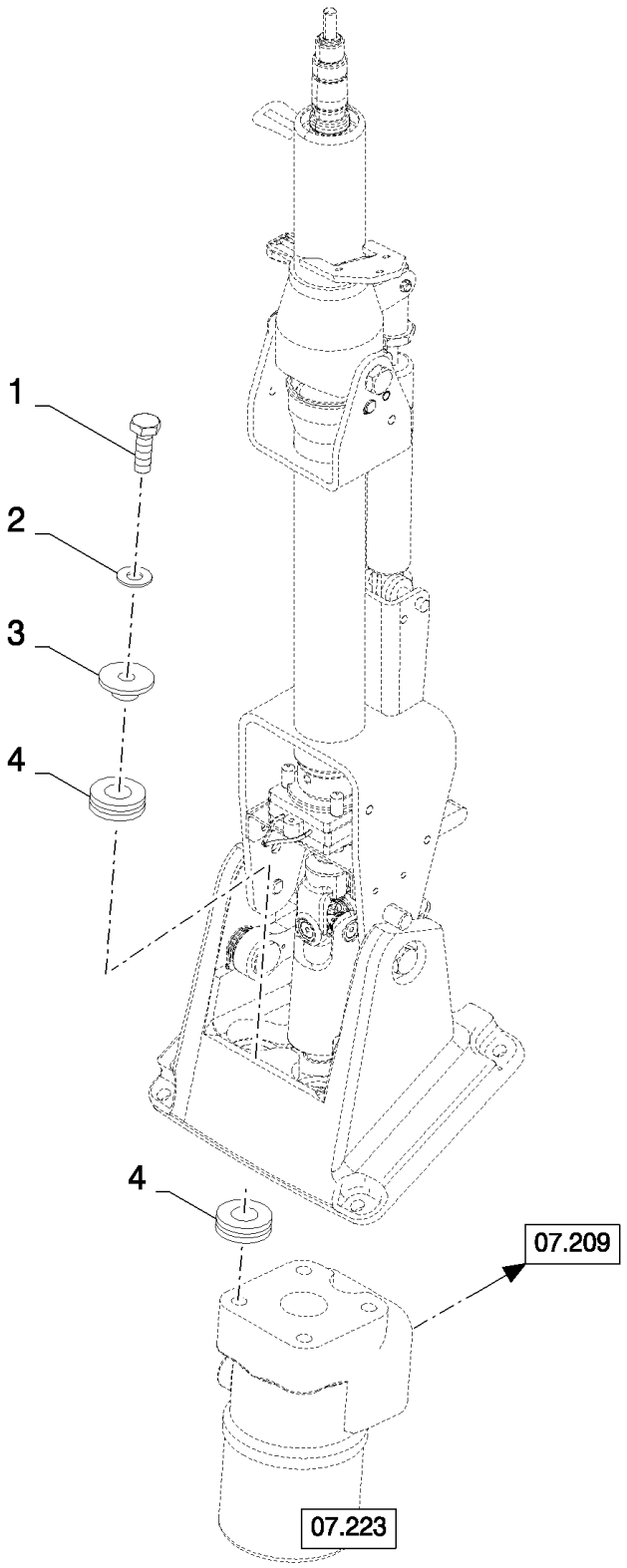

CSX7080 C659 - COMBINE (9/06-8/08)

07.222(01) STEERING VALVE - FOR ADJUSTABLE STEERING AXLE

ссылка	Номер детали	Кол-во	Описание
1	9706704	4	BOLT, Hex, M10 x 35, 8.8, Full Thd,
2	140045	4	WASHER, SPRING, Belleville, M10,
3	84819581	4	FLANGE,
4	84819582	8	DAMPER,

07.223(01) STEERING VALVE - FOR ADJUSTABLE STEERING AXLE AND ADJUSTABLE STEERING AXLE HIGH CENTER

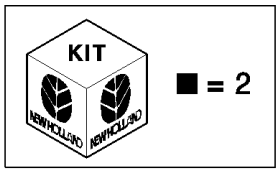

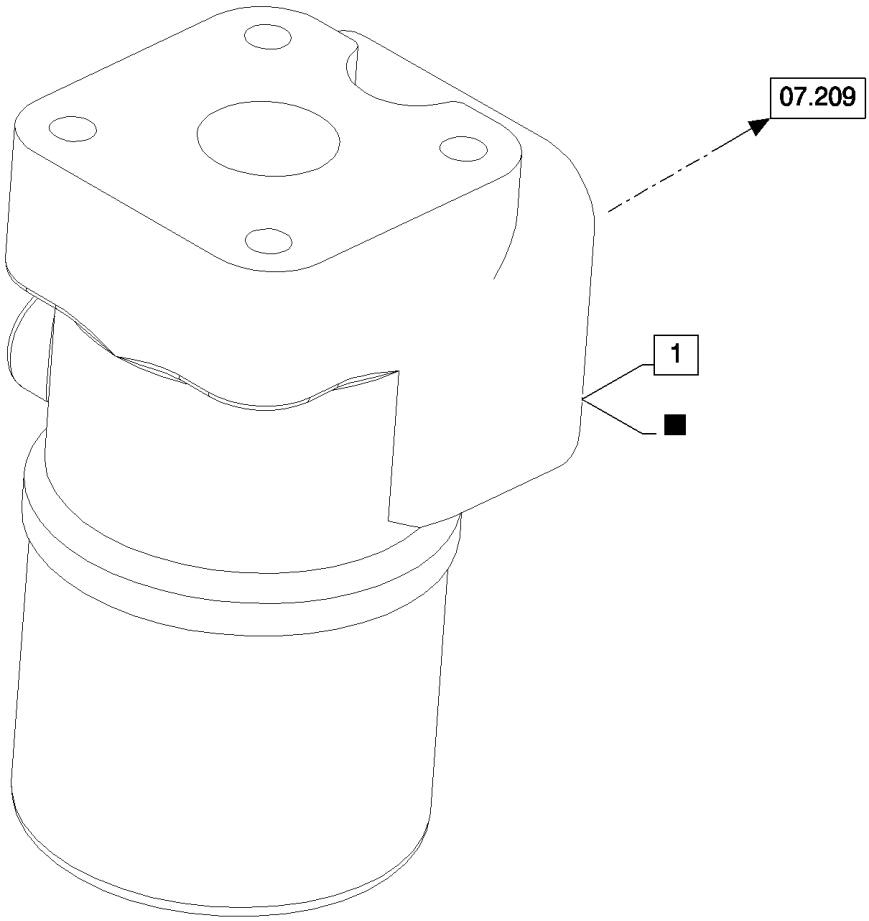

CSX7080 C659 - COMBINE (9/06-8/08)

07.223(01) STEERING VALVE - FOR ADJUSTABLE STEERING AXLE AND ADJUSTABLE STEERING AXLE HIGH CENTER

ссылка	Номер детали	Кол-во	Описание
1	84458934	1	VALVE, HYDRAULIC, (2)
2	84053469	1	KIT, SEALS,

07.223(B 01) STEERING VALVE - FOR FIXED, POWERED AND FIXED STEERING AXLE HIGH CENTER

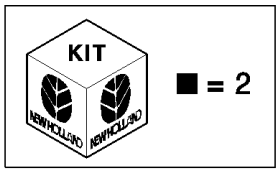

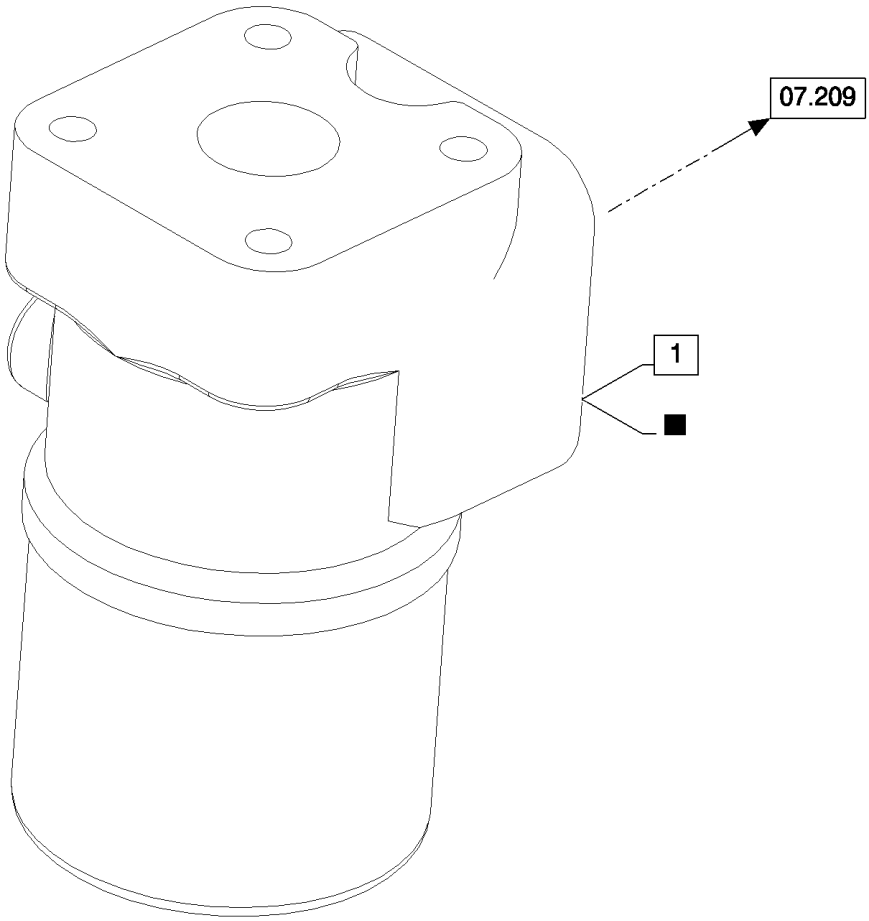

CSX7080 C659 - COMBINE (9/06-8/08)

07.223(B 01) STEERING VALVE - FOR FIXED, POWERED AND FIXED STEERING AXLE HIGH CENTER

ссылка	Номер детали	Кол-во	Описание
1	84458935	1	VALVE, HYDRAULIC, (2)
2	84053469	1	KIT, SEALS,

07.224(01) ADDITIONAL CYLINDER, STRAW ELEVATOR

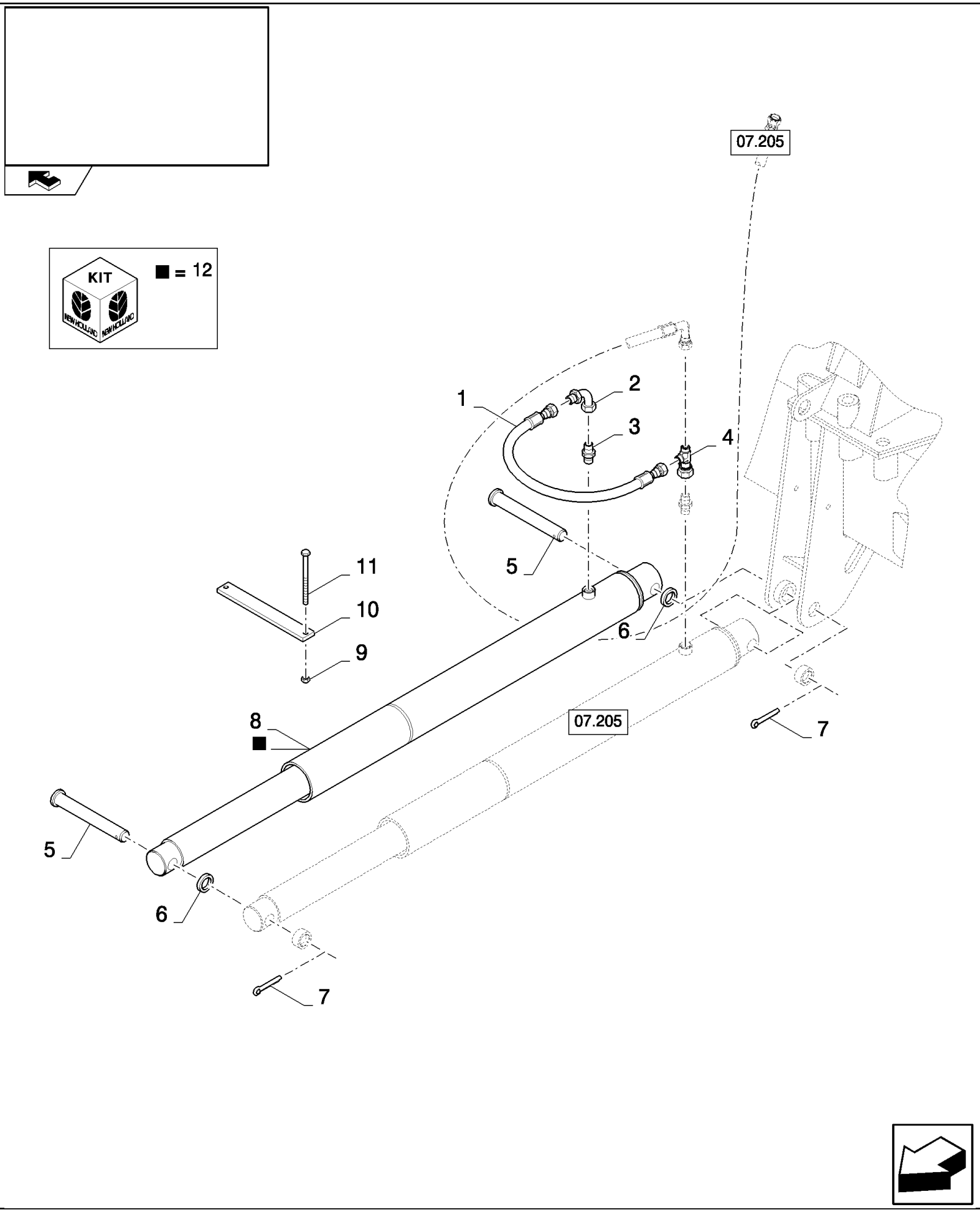

CSX7080 C659 - COMBINE (9/06-8/08)

07.224(01) ADDITIONAL CYLINDER, STRAW ELEVATOR

ссылка	Номер детали	Кол-во	Описание
1	9833953	1	HOSE,
2	9508529	1	ELBOW,
3	395782	1	CONNECTOR, HYD.,
4	84455036	1	CONNECTION, 3 WAY,
5	84440399	2	PIN,
6	84071288	2	WASHER,
7	300423	2	PIN, SPLIT (COTTER), M6.3 x 50,
8	84444496	1	CYLINDER, (12)
9	100037	2	NUT, M10 x 1.5, Cl 8,
10	84440400	2	BRACKET,
11	86508573	2	SCREW, Hex, M10 x 110, 8.8, M10x110
12	84807313	1	KIT, SEALS,

07.241(A 01) LOW PRESSURE HYDRAULICS

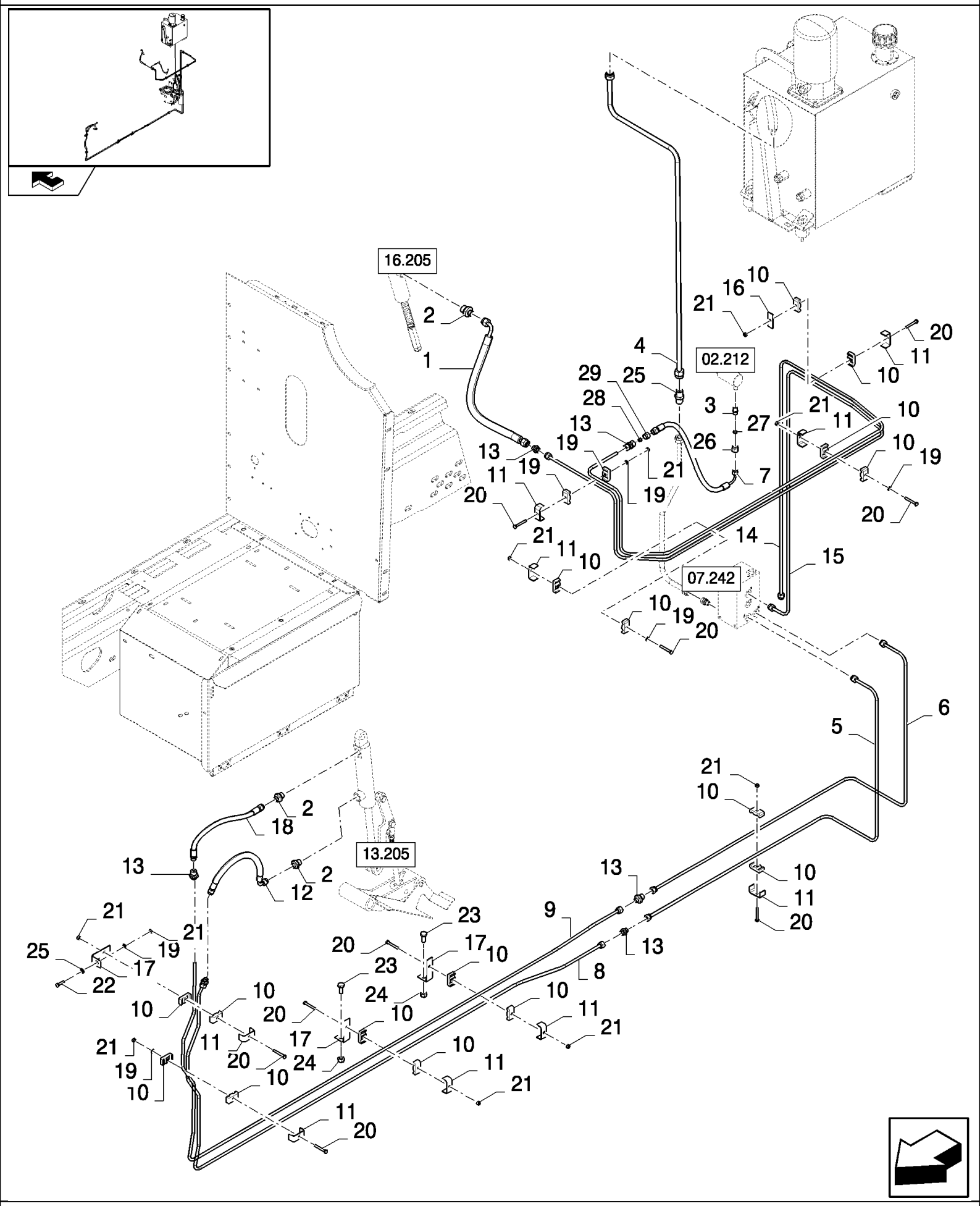

CSX7080 C659 - COMBINE (9/06-8/08)

07.241(A 01) LOW PRESSURE HYDRAULICS

ссылка	Номер детали	Кол-во	Описание
1	9839227	2	HOSE, HYDRAULIC,
2	386215	3	CONNECTOR, HYD.,
3	87533859	1	CONNECTOR, HYD.,
4	87364706	1	TUBE, HYD,
5	87364726	1	TUBE, HYD,
6	87364718	1	TUBE, HYD,
7	84043792	1	HOSE, HYDRAULIC, , BSN C619
7	87752769	1	HOSE, FLEXIBLE, , ASN D620
8	87364714	1	TUBE, HYD,
9	87364716	1	TUBE, HYD,
10	430357	20	CLAMP, , BSN C543
10	430357	18	CLAMP, , ASN D544
11	431941	10	SUPPORT, , BSN C543
11	431941	9	SUPPORT, , ASN D544
12	322357	1	WASHER, SPRING, Belleville, M6,
13	335172	5	CONNECTOR, HYD., , BSN C619
13	335172	4	CONNECTOR, HYD., , ASN D620
14	87364704	1	TUBE, HYD,
15	87364702	1	TUBE, HYD,
16	434097	1	BRACKET,
17	87344927	3	BRACKET, , BSN C543
17	87344927	2	BRACKET, , ASN D544
18	424524	1	HOSE, HYDRAULIC,
19	86588450	5	WASHER, M6,
20	86977790	10	SCREW, Hex, M6 x 45, 8.8, , BSN C543
20	86977790	9	SCREW, Hex, M6 x 45, 8.8, , ASN D544
21	9706755	11	NUT, M6, Cl 8, , BSN C543
21	9706755	10	NUT, M6, Cl 8, , ASN D544
22	86977786	1	BOLT, Hex, M6 x 25, 8.8,
23	43139	2	SCREW, Hex, M10 x 25, 8.8, Full Thd, , BSN C543
24	100037	2	NUT, M10 x 1.5, Cl 8, , BSN C543
25	150018	1	CONNECTOR, HYD., , ASN D544
26	84814896	1	NUT, , BSN F554619
27	150013	1	FERRULE, , BSN F554619
28	335136	1	FERRULE, , ASN D544
29	335135	1	NUT, , BSN F554619

07.242(A 01) LOW PRESSURE HYDRAULICS

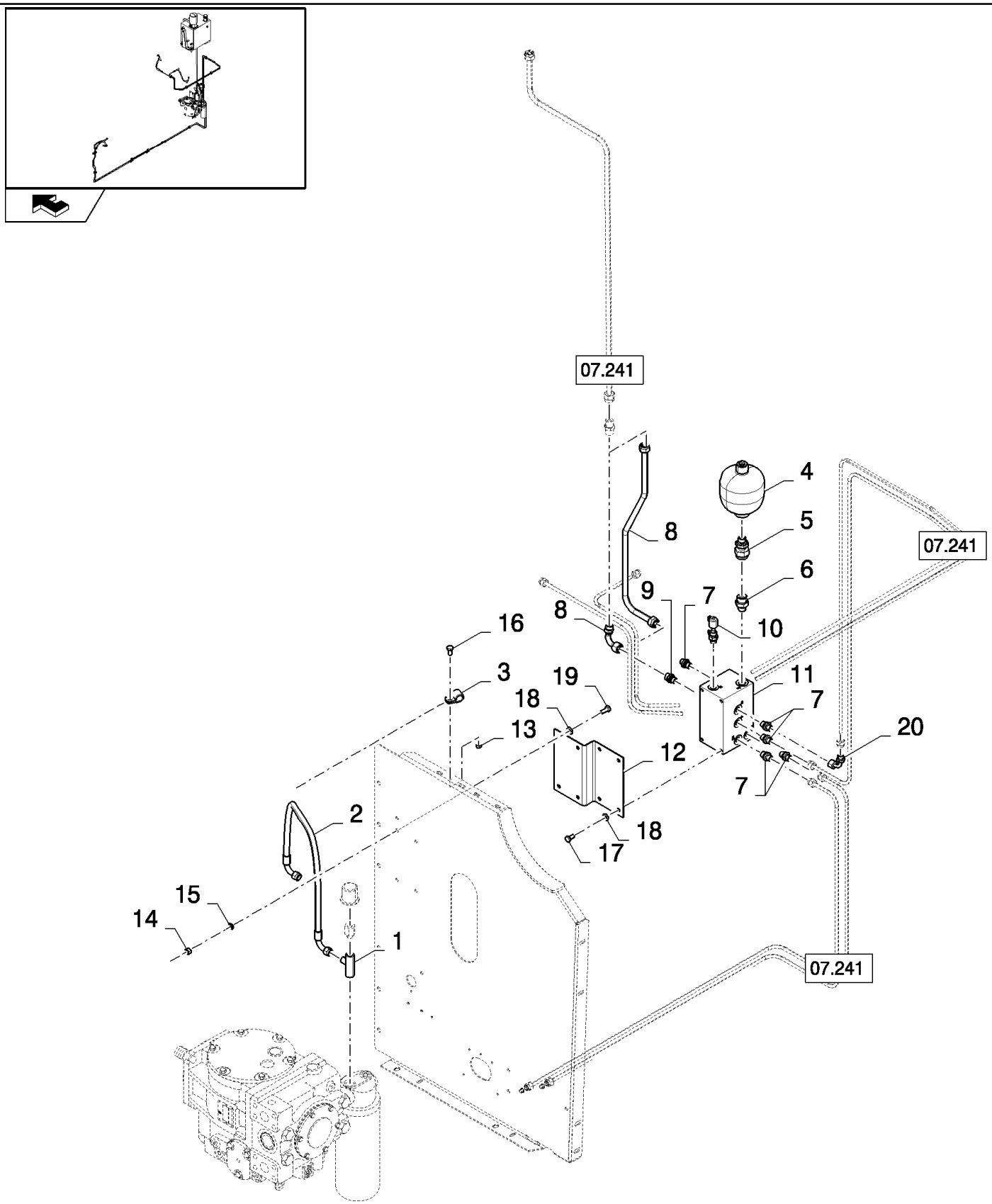

CSX7080 C659 - COMBINE (9/06-8/08)

07.242(A 01) LOW PRESSURE HYDRAULICS

ссылка	Номер детали	Кол-во	Описание
1	84037988	1	CONNECTION, 3 WAY,
2	87389991	1	HOSE, FLEXIBLE,
3	431351	1	CLAMP,
4	87386974	1	ACCUMULATOR,
5	84000316	1	CONNECTOR, HYD.,
6	394372	1	CONNECTOR, HYD.,
7	87381134	5	FITTING,
8	9508529	1	ELBOW, , BSN C543
8	87567343	1	TUBE, HYD, , ASN D544
9	87381135	1	FITTING,
10	84100207	1	COUPLING, QUICK, MALE,
11	87335297	1	VALVE, HYDRAULIC,
12	87353867	1	SUPPORT,
13	9706755	1	NUT, M6, Cl 8,
14	9706690	4	NUT, M8, Cl 8,
15	86624184	4	WASHER, M8 x 16 x 1.6,
16	86977786	1	BOLT, Hex, M6 x 25, 8.8,
17	120103	4	BOLT, Hex, M8 x 16, 8.8,
18	322358	8	WASHER, SPRING, Belleville, M8,
19	120104	4	SCREW, Hex, M8 x 20, 8.8,
20	418283	1	ELBOW,

07.243(01) HYDRAULIC REEL DRIVE

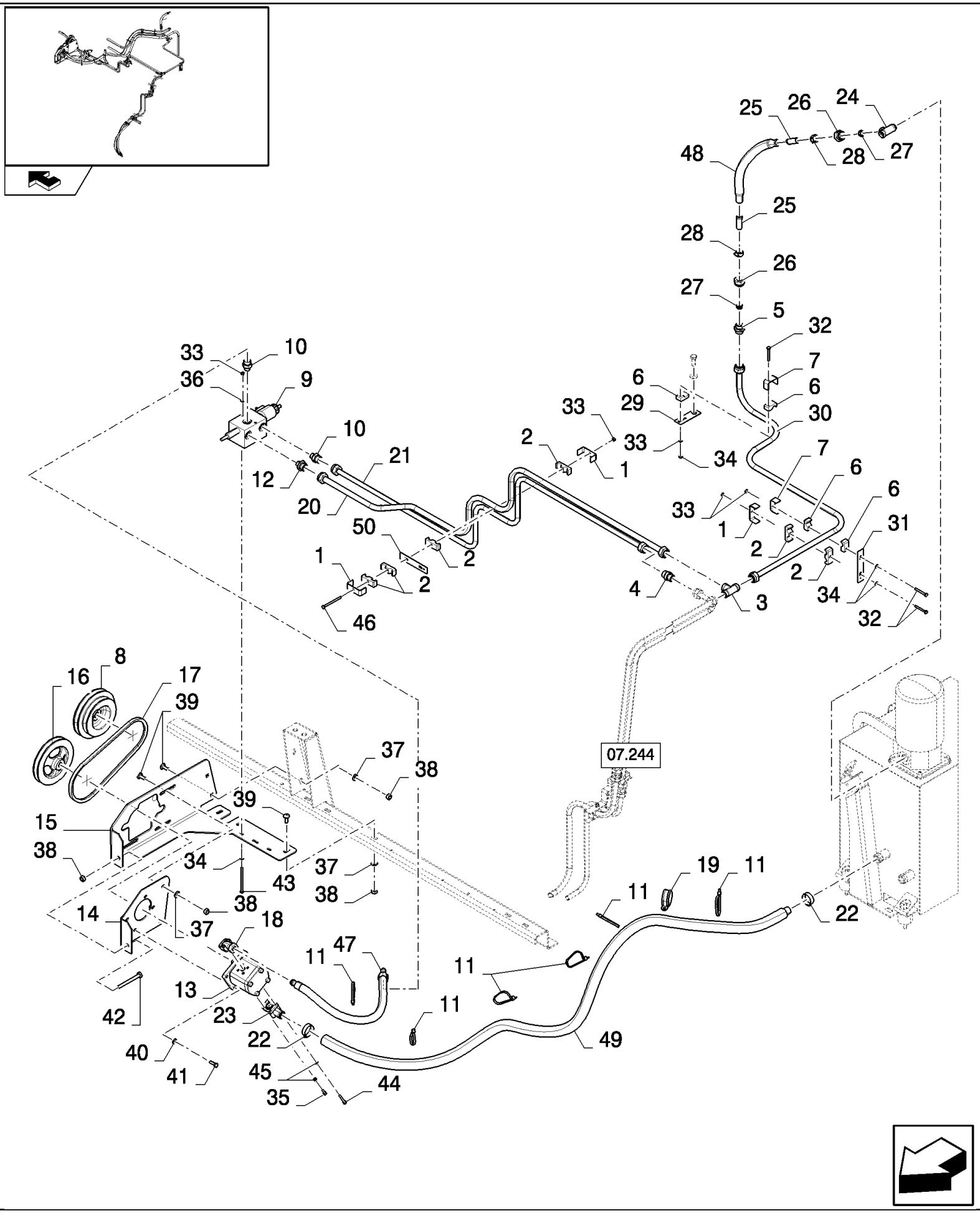

CSX7080 C659 - COMBINE (9/06-8/08)

07.243(01) HYDRAULIC REEL DRIVE

ссылка	Номер детали	Кол-во	Описание
1	84814948	3	SUPPORT,
2	430356	6	CLAMP,
3	379431	1	CONNECTION, 3 WAY,
4	335174	1	CONNECTOR, HYD.,
5	335173	1	CONNECTOR, HYD.,
6	433007	4	CLAMP,
7	433100	2	SUPPORT,
8	87323482	1	PULLEY,
9	84444581	1	VALVE, HYDRAULIC, , NO SUBPARTS YET AVAILABLE
10	394372	2	CONNECTOR, HYD.,
11	396718	6	STRAP,
12	394373	1	CONNECTOR, HYD.,
13	87340938	1	PUMP, HYDRAULIC, , NO SUBPARTS YET AVAILABLE
14	87324033	1	BRACKET,
15	87324306	1	SUPPORT,
16	87324411	1	PULLEY,
17	80754165	1	BELT, TRANSMISSION,
18	337208	1	ELBOW,
19	455556	1	CLAMP,
20	87364728	1	TUBE, HYD, , BSN C563
20	87392090	1	TUBE, HYD, , ASN D564
21	87389989	1	TUBE, HYD, , BSN C563
21	87364732	1	TUBE, HYD, , ASN D564
22	382527	2	CLAMP, HOSE,
23	450594	1	ELBOW,
24	84042442	1	CONNECTION, 3 WAY,
25	84012346	2	TUBE,
26	335170	2	NUT,
27	335168	2	FERRULE,
28	326082	2	CLAMP,
29	84007699	1	PLATE, COVER,
30	87364730	1	TUBE, HYD,
31	919316	1	SUPPORT,
32	120056	3	SCREW, Hex, M6 x 50, 8.8,
33	9706755	6	NUT, M6, Cl 8,
34	86588450	5	WASHER, M6,
35	120229	2	SCREW, Hex Soc Hd, M6 x 20, 8.8,
36	322357	2	WASHER, SPRING, Belleville, M6,
37	140045	8	WASHER, SPRING, Belleville, M10,
38	100016	10	NUT, M10, Cl 8,
39	86633356	8	BOLT, CARRIAGE, Short NK, M10 x 25, Cl8.8, Full Thd,
40	322358	4	WASHER, SPRING, Belleville, M8,
41	43127	4	BOLT, Hex, M8 x 25, 8.8,
42	360296	1	BOLT, Hex, M10 x 100, 8.8, Full Thd,

07.243(01) HYDRAULIC REEL DRIVE

ссылка	Номер детали	Кол-во	Описание
43	412499	2	BOLT, Hex, M6 x 100, 8.8, Full Thd,
44	356464	2	SCREW,
45	140044	4	WASHER,
46	86508570	1	SCREW, Hex, M6 x 80, 8.8, , BSN C563
46	9850685	1	BOLT, Hex, M6 x 90, 8.8, , ASN D564
47	9815904	1	SLEEVE,
48	451557	1	HOSE,
49	84014799	1	HOSE, , BSN C563
49	87615686	1	HOSE, , ASN D564
50	919316	1	SUPPORT, , BSN C563
50	397645	1	PLATE, , ASN D564

07.243(E 01) HYDRAULIC REEL DRIVE - FOR LATERALE ONLY

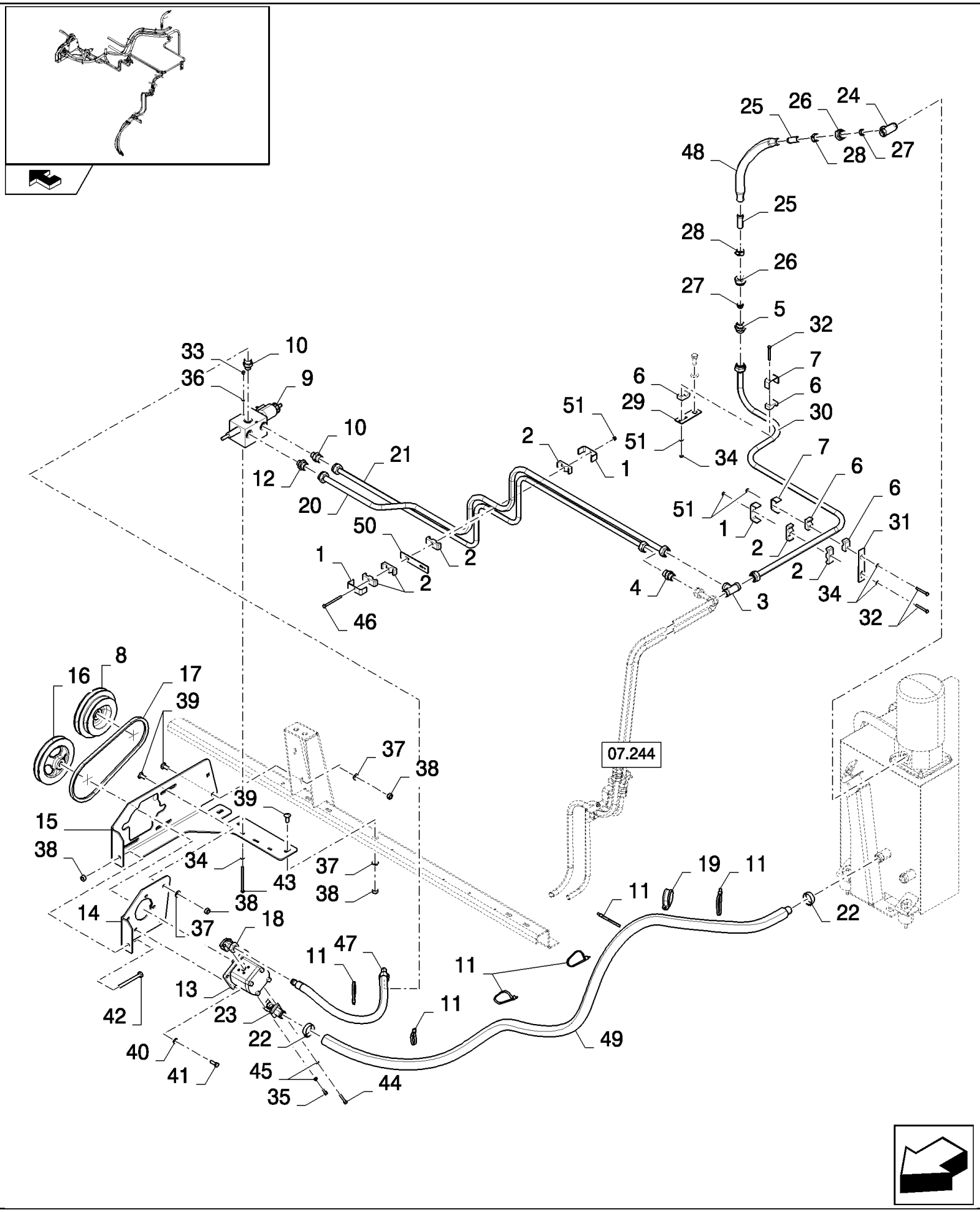

CSX7080 C659 - COMBINE (9/06-8/08)

07.243(E 01) HYDRAULIC REEL DRIVE - FOR LATERALE ONLY

ссылка	Номер детали	Кол-во	Описание
1	84814948	3	SUPPORT,
2	430356	6	CLAMP,
3	379431	1	CONNECTION, 3 WAY,
4	335174	1	CONNECTOR, HYD.,
5	335173	1	CONNECTOR, HYD.,
6	433007	4	CLAMP,
7	433100	2	SUPPORT,
8	87323482	1	PULLEY,
9	84444581	1	VALVE, HYDRAULIC, , NO SUBPARTS YET AVAILABLE
10	394372	2	CONNECTOR, HYD.,
11	396718	6	STRAP,
12	394373	1	CONNECTOR, HYD.,
13	87340938	1	PUMP, HYDRAULIC, , NO SUBPARTS YET AVAILABLE
14	87324033	1	BRACKET,
15	87324306	1	SUPPORT,
16	87324411	1	PULLEY,
17	80754165	1	BELT, TRANSMISSION,
18	337208	1	ELBOW,
19	455556	1	CLAMP,
20	87364728	1	TUBE, HYD, , FOR CSX7080 ONLY
20	87624523	1	TUBE, HYD, , FOR CSX7060 ONLY
21	87389989	1	TUBE, HYD, , FOR CSX7080 ONLY
21	87624521	1	TUBE, HYD, , FOR CSX7060 ONLY
22	382527	2	CLAMP, HOSE,
23	450594	1	ELBOW,
24	84042442	1	CONNECTION, 3 WAY,
25	84012346	2	TUBE,
26	335170	2	NUT,
27	335168	2	FERRULE,
28	326082	2	CLAMP,
29	84007699	1	PLATE, COVER,
30	87364730	1	TUBE, HYD,
31	919316	1	SUPPORT,
32	120056	3	SCREW, Hex, M6 x 50, 8.8,
33	9706755	2	NUT, M6, Cl 8,
34	86588450	5	WASHER, M6,
35	120229	2	SCREW, Hex Soc Hd, M6 x 20, 8.8,
36	322357	2	WASHER, SPRING, Belleville, M6,
37	140045	8	WASHER, SPRING, Belleville, M10,
38	100016	10	NUT, M10, Cl 8,
39	86512446	8	BOLT, CARRIAGE, Short NK, M10 x 30, Cl8.8, Full Thd,
40	322358	4	WASHER, SPRING, Belleville, M8,
41	43127	4	BOLT, Hex, M8 x 25, 8.8,
42	360296	1	BOLT, Hex, M10 x 100, 8.8, Full Thd,

CSX7080 C659 - COMBINE (9/06-8/08)

07.243(E 01) HYDRAULIC REEL DRIVE - FOR LATERALE ONLY

ссылка	Номер детали	Кол-во	Описание
43	412499	2	BOLT, Hex, M6 x 100, 8.8, Full Thd,
44	356464	2	SCREW,
45	140044	4	WASHER,
46	9850685	1	BOLT, Hex, M6 x 90, 8.8,
47	9815904	1	SLEEVE,
48	451557	1	HOSE,
49	84014799	1	HOSE,
50	397645	1	PLATE,
51	353308	4	NUT, M6 x 1, Cl 8,

07.244(01) HYDRAULIC REEL DRIVE

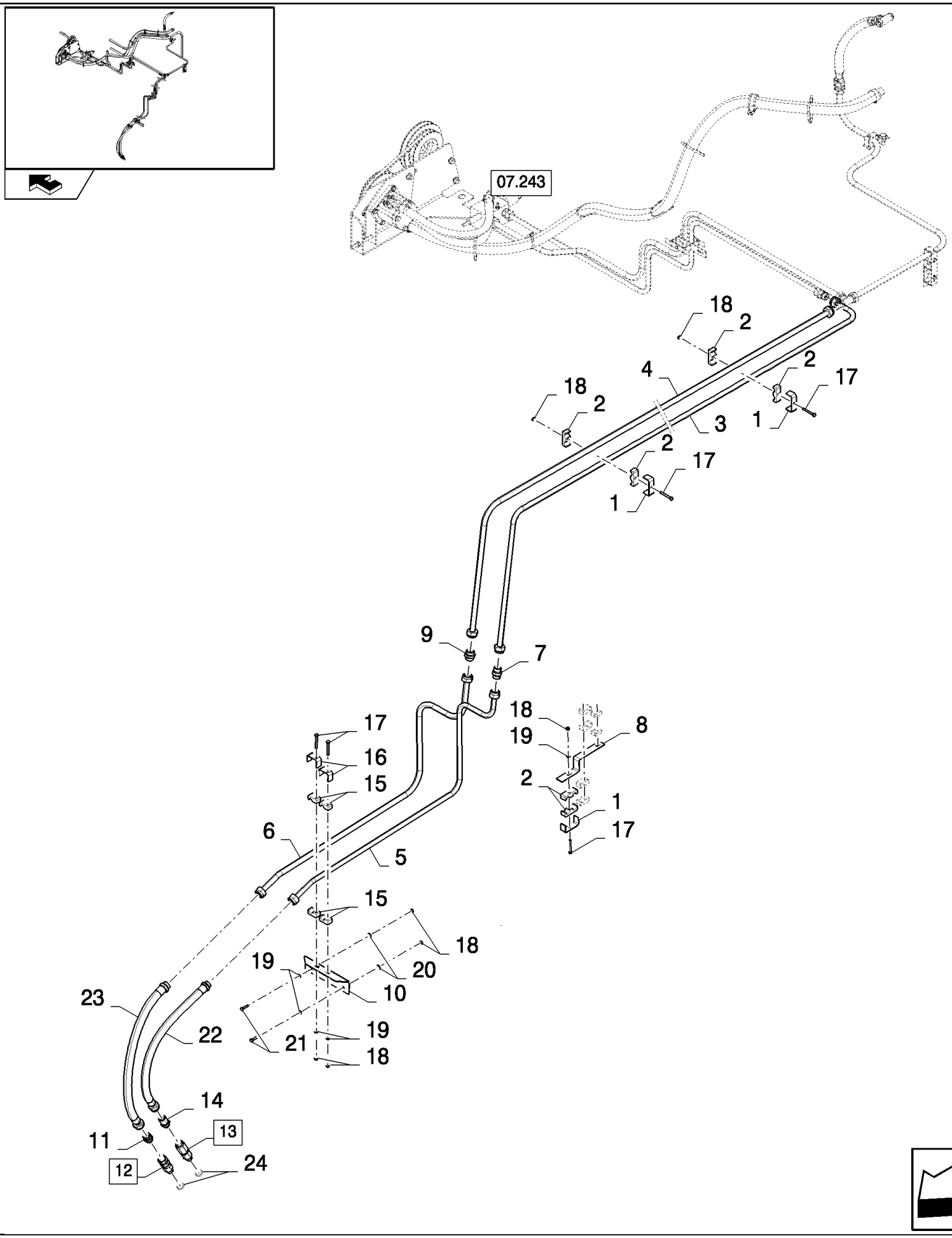

CSX7080 C659 - COMBINE (9/06-8/08)

07.244(01) HYDRAULIC REEL DRIVE

ссылка	Номер детали	Кол-во	Описание
1	84814948	3	SUPPORT,
2	430356	6	CLAMP,
3	87389995	1	TUBE, HYD,
4	87364734	1	TUBE, HYD,
5	87389999	1	TUBE, HYD,
6	87389997	1	TUBE, HYD,
7	335174	1	CONNECTOR, HYD.,
8	87388987	1	BRACKET,
9	335173	1	CONNECTOR, HYD.,
10	84447753	1	BRACKET,
11	84437854	1	CONNECTOR, HYD.,
12	84435503	1	CONNECTOR, HYD., (24)
13	84435502	1	CONNECTOR, HYD., (24)
14	9513143	1	CONNECTOR, HYD.,
15	433007	4	CLAMP,
16	433100	2	SUPPORT,
17	120056	5	SCREW, Hex, M6 x 50, 8.8,
18	9706755	7	NUT, M6, Cl 8,
19	86588450	5	WASHER, M6,
20	322357	2	WASHER, SPRING, Belleville, M6,
21	86977786	2	BOLT, Hex, M6 x 25, 8.8,
22	84433549	1	HOSE, FLEXIBLE,
23	84433494	1	HOSE, FLEXIBLE,
24	86623898	1	SEAL,

07.244(B 01) HYDRAULIC REEL DRIVE - FOR LATERALE ONLY

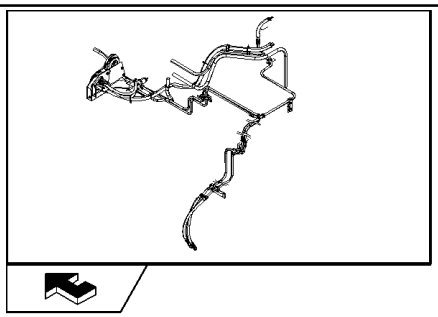

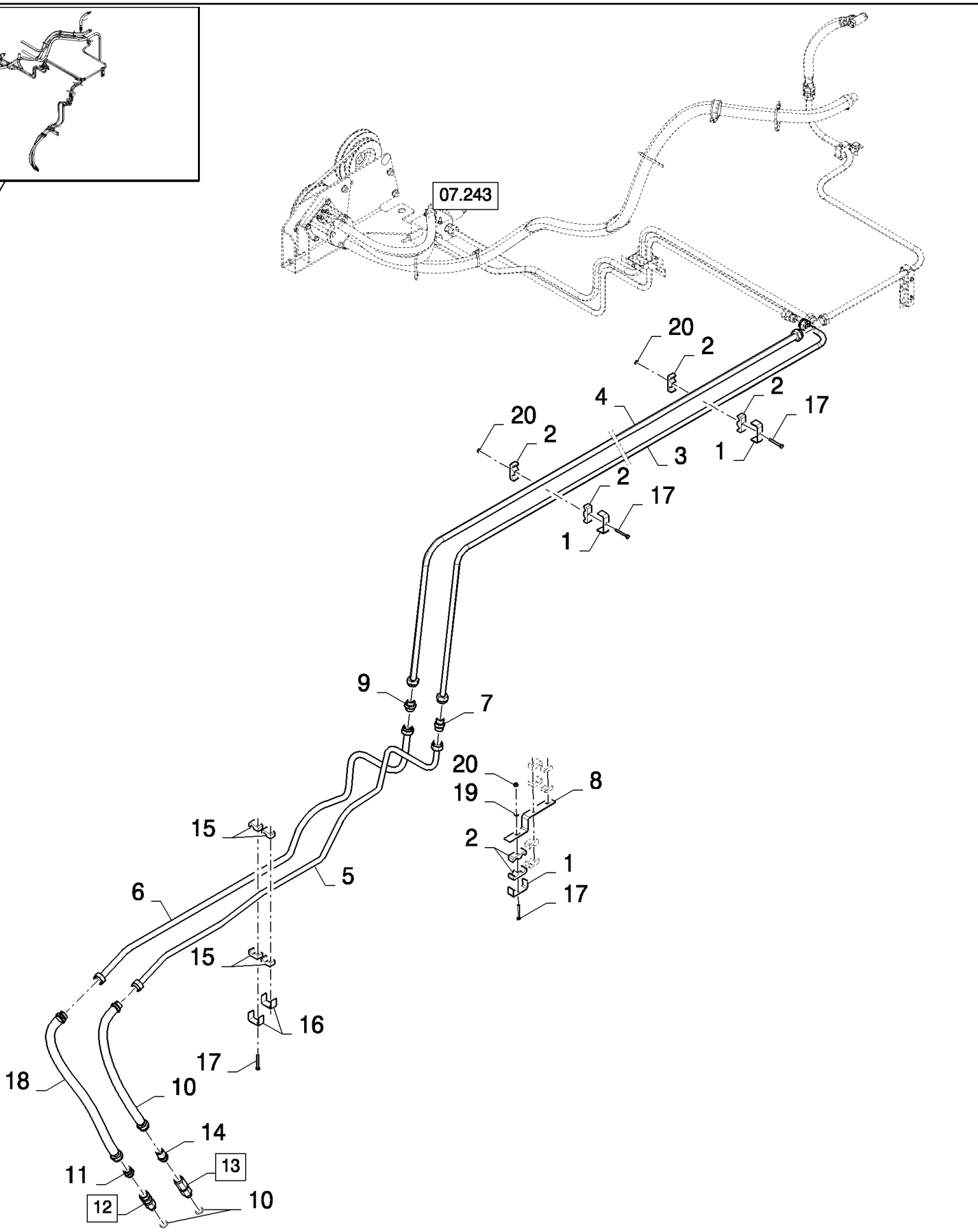

CSX7080 C659 - COMBINE (9/06-8/08)

07.244(B 01) HYDRAULIC REEL DRIVE - FOR LATERALE ONLY

ссылка	Номер детали	Кол-во	Описание
1	84814948	4	SUPPORT,
2	430356	8	CLAMP,
3	87389995	1	TUBE, HYD,
4	87364734	1	TUBE, HYD,
5	87669604	1	TUBE, HYD,
6	87669602	1	TUBE, HYD,
7	335174	1	CONNECTOR, HYD.,
8	87388987	1	BRACKET,
9	335173	1	CONNECTOR, HYD.,
10	84433549	1	HOSE, FLEXIBLE,
11	84437854	1	CONNECTOR, HYD.,
12	84435503	1	CONNECTOR, HYD., (19)
13	84435502	1	CONNECTOR, HYD., (19)
14	9513143	1	CONNECTOR, HYD.,
15	433007	4	CLAMP,
16	433100	2	SUPPORT,
17	120056	5	SCREW, Hex, M6 x 50, 8.8,
18	84433494	1	HOSE, FLEXIBLE,
19	86623898	1	SEAL,
20	353308	3	NUT, M6 x 1, Cl 8,

07.245(A 01) HYDRAULICS - FOR LATERALE ONLY

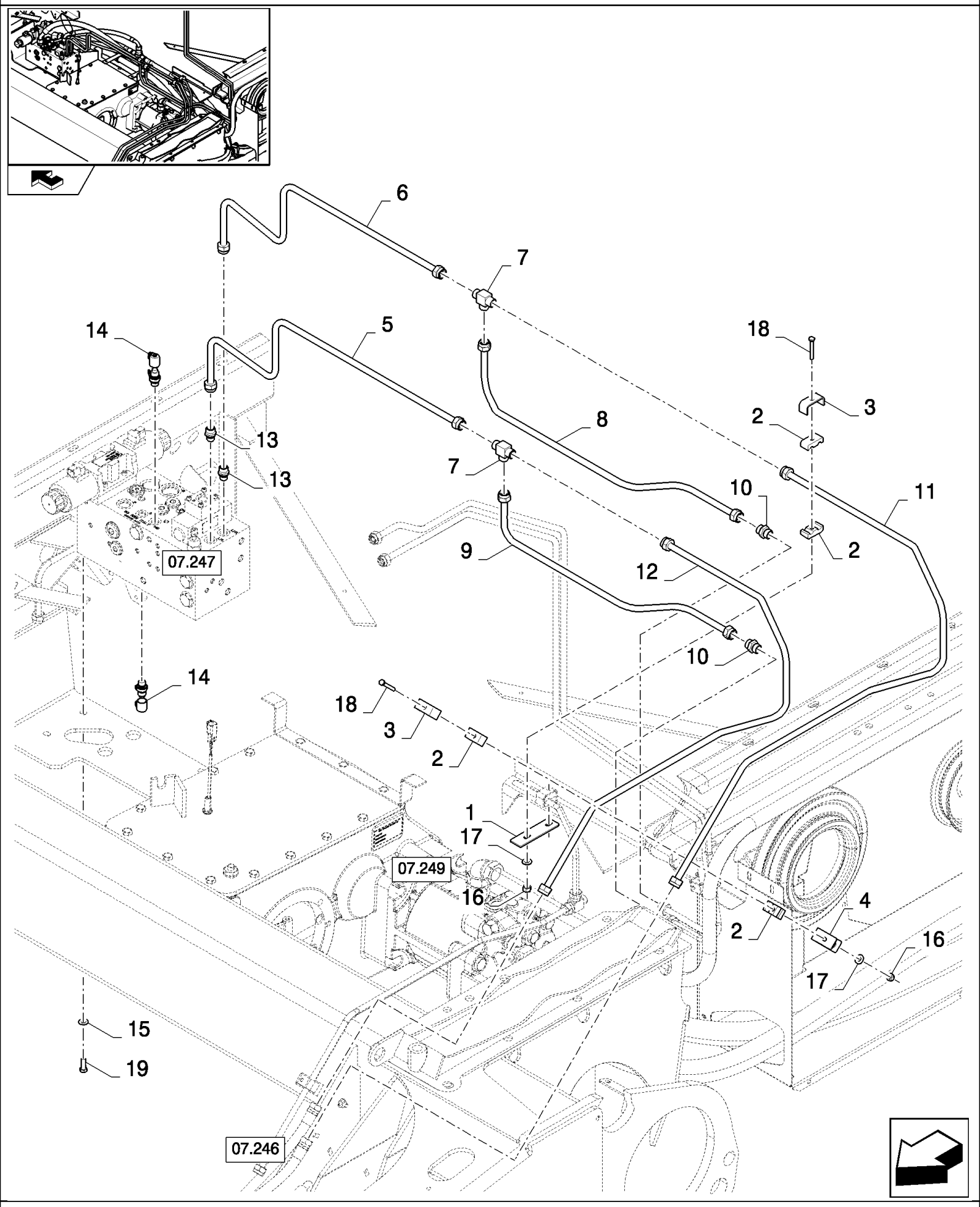

CSX7080 C659 - COMBINE (9/06-8/08)

07.245(A 01) HYDRAULICS - FOR LATERALE ONLY

ссылка	Номер детали	Кол-во	Описание
1	87724402	1	SUPPORT,
2	430357	4	CLAMP,
3	431941	2	SUPPORT,
4	87724404	1	SUPPORT,
5	87729119	1	TUBE, HYD,
6	87729121	1	TUBE, HYD,
7	150019	2	CONNECTION, 3 WAY,
8	87729131	1	TUBE, HYD,
9	87729133	1	TUBE, HYD,
10	150018	2	CONNECTOR, HYD.,
11	87717152	1	TUBE, HYD,
12	87717154	1	TUBE, HYD,
13	87381135	2	FITTING,
14	84100207	2	COUPLING, QUICK, MALE,
15	140045	4	WASHER, SPRING, Belleville, M10,
16	353308	2	NUT, M6 x 1, Cl 8,
17	322357	2	WASHER, SPRING, Belleville, M6,
18	86977790	2	SCREW, Hex, M6 x 45, 8.8,
19	43139	4	SCREW, Hex, M10 x 25, 8.8, Full Thd,

07.246(A 01) HYDRAULICS - FOR LATERALE ONLY

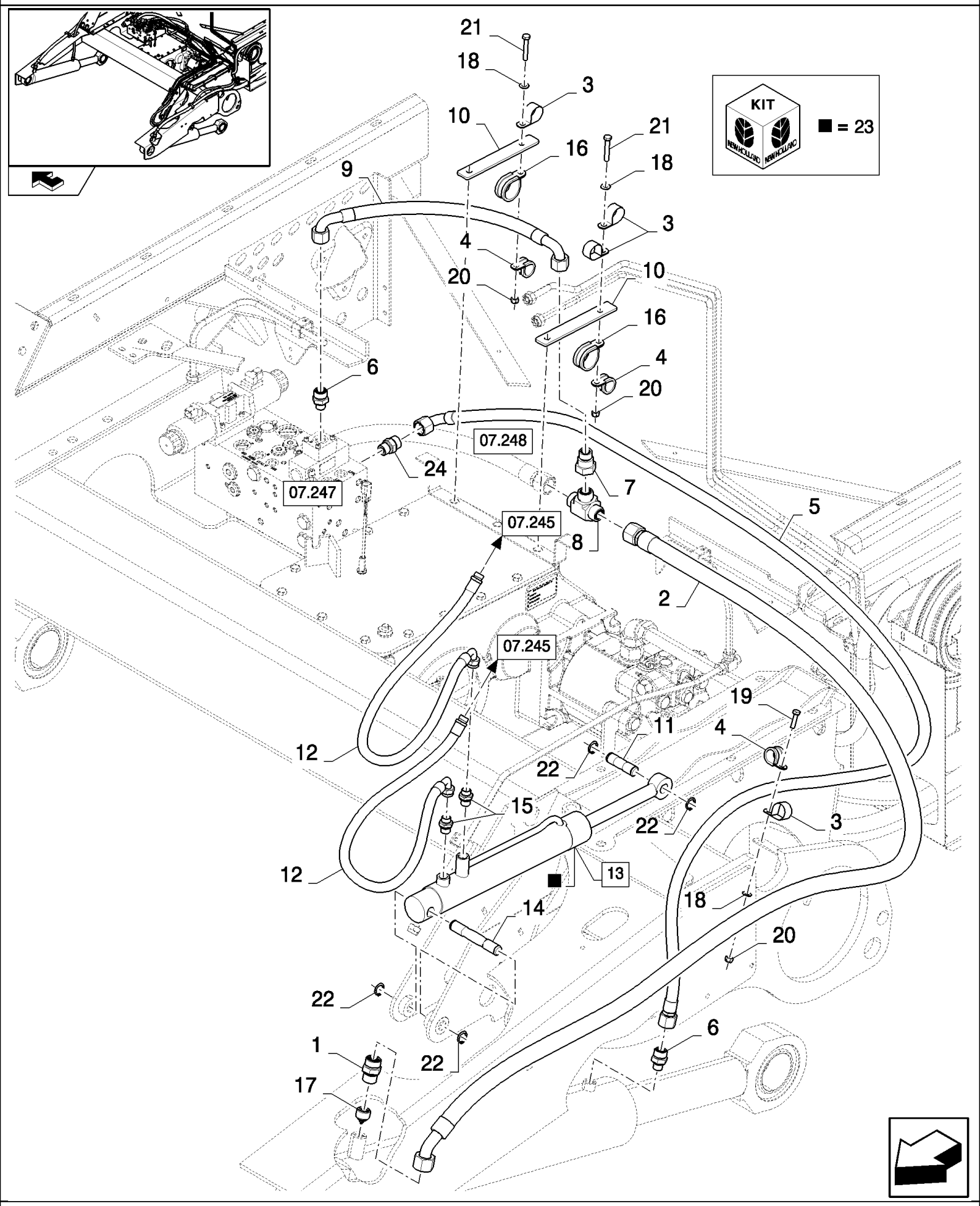

CSX7080 C659 - COMBINE (9/06-8/08)

07.246(A 01) HYDRAULICS - FOR LATERALE ONLY

ссылка	Номер детали	Кол-во	Описание
1	86579682	1	CONNECTOR, HYD., 1 3/16"-12 ORFS x M27 x 2 ORB,
2	87562541	1	HOSE, FLEXIBLE,
3	86628564	4	CLAMP, 1 1/4", Insul, 3/8" Bolt, , BSN C627
3	86628564	3	CLAMP, 1 1/4", Insul, 3/8" Bolt, , ASN D628
4	418407	3	CLAMP, , BSN C627
4	418407	2	CLAMP, , ASN D628
5	87562540	1	HOSE, FLEXIBLE,
6	86579679	2	CONNECTOR, HYD., 1"-14 ORFS x M18 x 1.5 ORB,
7	84989617	1	CONNECTOR, HYD.,
8	87359490	1	UNION,
9	87577526	1	HOSE, FLEXIBLE,
10	87724406	2	SUPPORT,
11	87539706	1	PIN,
12	87669738	2	HOSE, FLEXIBLE,
13	87593496	1	HYDRAULIC CYLINDER, (23)
14	87539704	1	PIN,
15	9850317	2	CONNECTOR, HYD.,
16	84053873	2	CLAMP,
17	87708801	1	VALVE, SAFETY,
18	322358	4	WASHER, SPRING, Belleville, M8,
19	43128	2	BOLT, Hex, M8 x 30, 8.8,
20	86629542	3	NUT, LOCK, M8 x 1.25, Cl 8,
21	120107	2	BOLT, Hex, M8 x 50, 8.8, Full Thd, , BSN C614
21	86977784	2	SCREW, , ASN D615
22	11066871	4	CIRCLIP, M20,
23	84026075	1	KIT, SEALS,
24	86579680	1	CONNECTOR, HYD., 1"-14 ORFS x M22 x 1.5 ORB,

07.247(01) VALVE, HYDRAULICS - FOR LATERALE ONLY

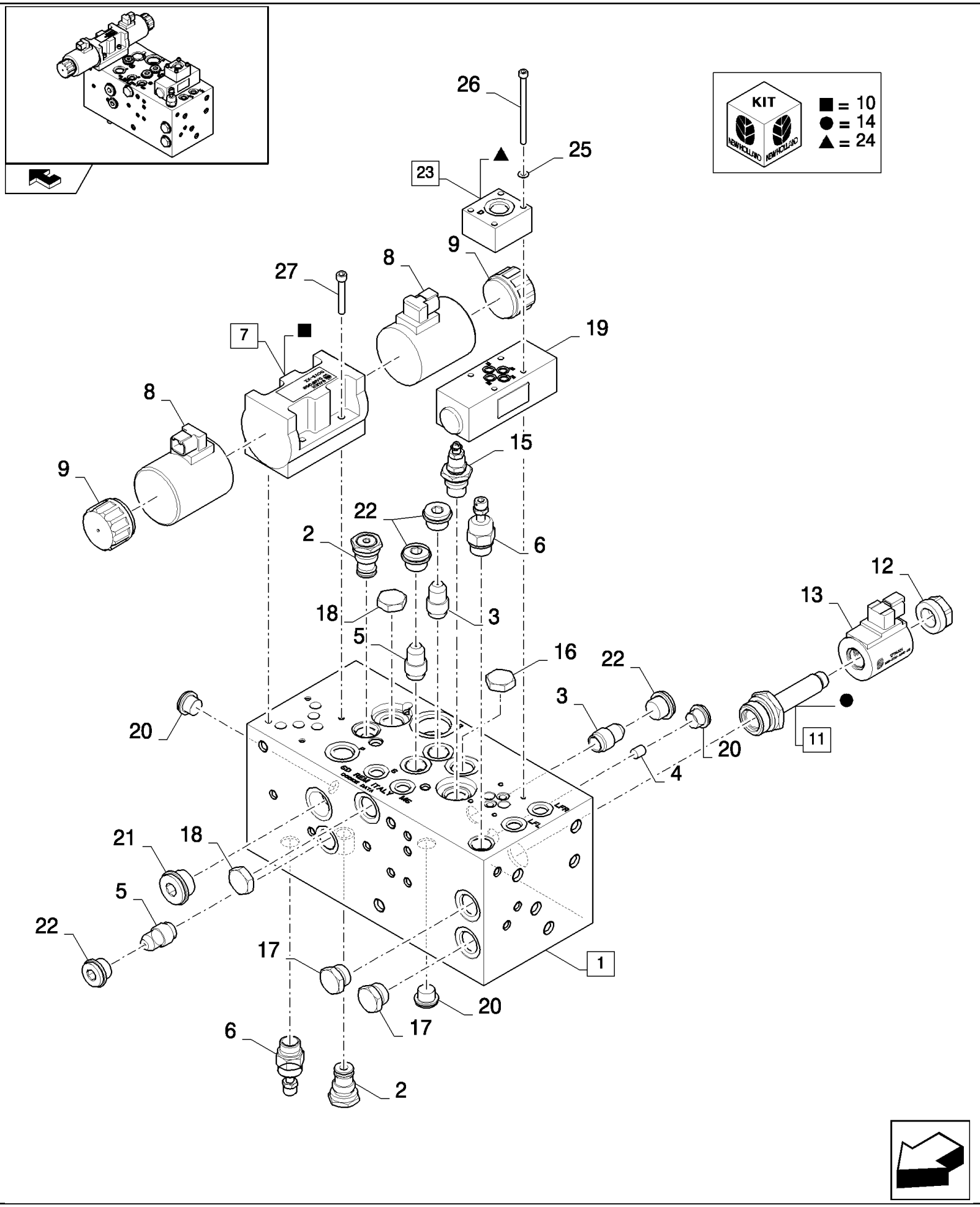

CSX7080 C659 - COMBINE (9/06-8/08)

07.247(01) VALVE, HYDRAULICS - FOR LATERALE ONLY

ссылка	Номер детали	Кол-во	Описание
1	87531670	1	VALVE, HYDRAULIC, (1 to 27)
2	87616622	2	VALVE, CHECK,
3	87718131	2	VALVE, CONTROL,
4	87718132	1	ORIFICE,
5	87718133	2	VALVE, CONTROL,
6	87718134	2	VALVE, PRESSURE RELIEF,
7	87718135	1	ELECTRO-VALVE, (8 to 10)
8	87719582	2	COIL,
9	87719583	2	COIL,
10	87719584	1	KIT, SEALS,
11	87718136	1	ELECTRO-VALVE, (12 to 14)
12	87719607	1	COIL,
13	87719608	1	COIL,
14	87719609	1	KIT, SEALS,
15	87718137	1	VALVE, PILOT,
16	87718138	1	VALVE, CHECK,
17	87718139	2	VALVE, CHECK,
18	87718140	2	VALVE, CHECK,
19	87718141	1	VALVE, CHECK,
20	87616605	3	PLUG,
21	87719164	1	PLUG,
22	87719165	4	PLUG,
23	87719166	1	PORT, (24)
24	87719624	2	KIT, SEALS,
25	87698783	4	WASHER,
26	87698787	4	SCREW,
27	14305831	4	SCREW, Hex Soc Hd, M6 x 40, 10.9,

07.248(01) HYDRAULICS - FOR LATERALE ONLY

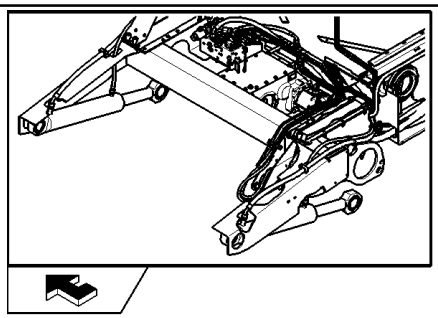

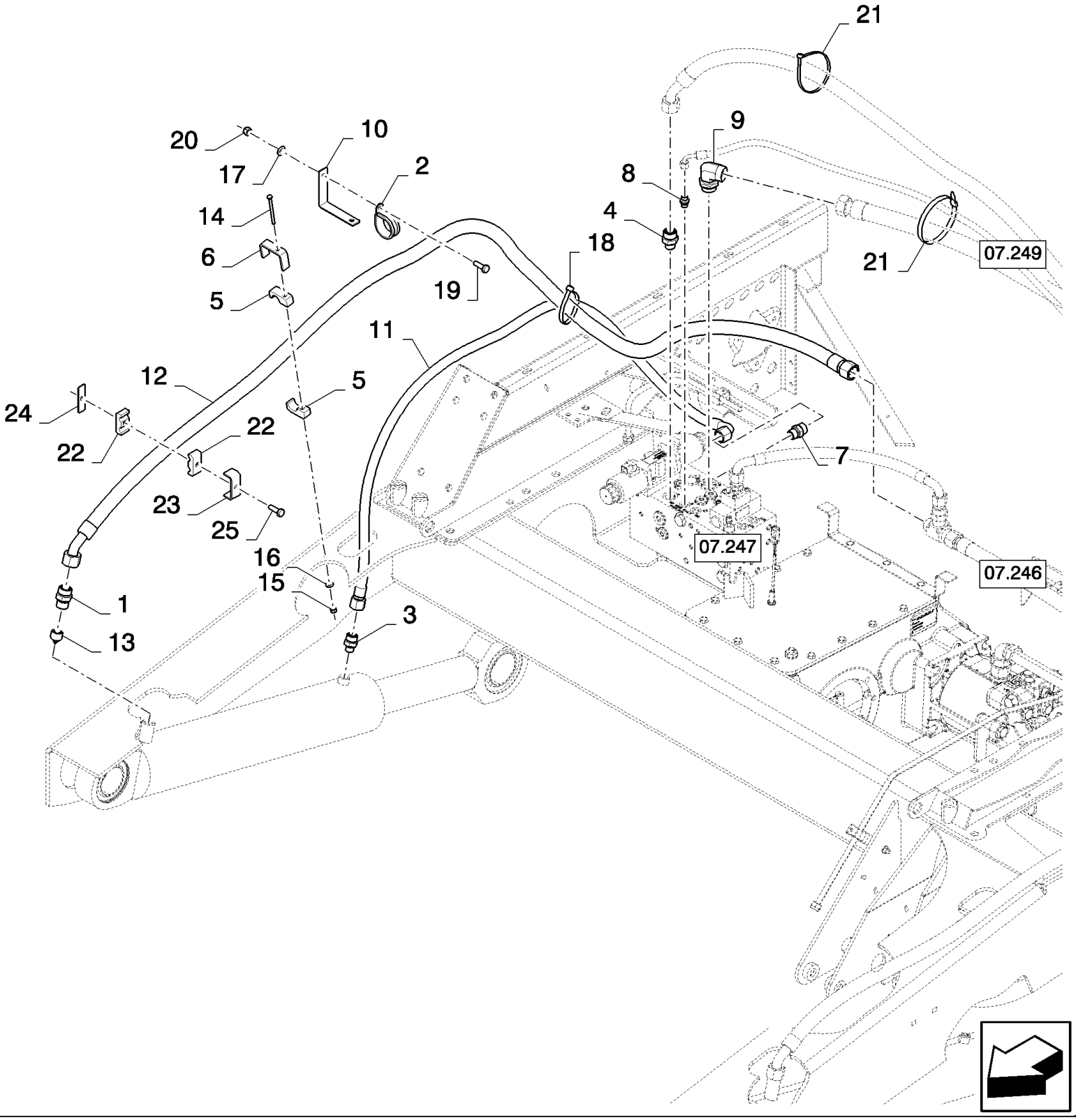

CSX7080 C659 - COMBINE (9/06-8/08)

07.248(01) HYDRAULICS - FOR LATERALE ONLY

ссылка	Номер детали	Кол-во	Описание
1	86579682	1	CONNECTOR, HYD., 1 3/16"-12 ORFS x M27 x 2 ORB,
2	87737323	3	CLAMP, , BSN C627
2	87737323	1	CLAMP, , ASN D628
3	86579679	1	CONNECTOR, HYD., 1"-14 ORFS x M18 x 1.5 ORB,
4	86579681	1	CONNECTOR, HYD., 1 3/16"-12 ORFS x M22 x 1.5 ORB,
5	457546	4	CLAMP,
6	743318	2	SUPPORT,
7	86579680	1	CONNECTOR, HYD., 1"-14 ORFS x M22 x 1.5 ORB,
8	87381134	1	FITTING,
9	87738196	1	ELBOW,
10	87724408	2	SUPPORT, , BSN C614
10	87476516	2	SUPPORT, , BSN F615627
10	87482234	2	PLATE, FIXING, , ASN D628
11	87577527	1	HOSE, FLEXIBLE,
12	87577522	1	HOSE, FLEXIBLE,
13	87708801	1	VALVE, SAFETY,
14	86508570	2	SCREW, Hex, M6 x 80, 8.8,
15	353308	2	NUT, M6 x 1, Cl 8,
16	322357	2	WASHER, SPRING, Belleville, M6,
17	322358	2	WASHER, SPRING, Belleville, M8,
18	86566990	1	STRAP, CABLE,
19	43127	2	BOLT, Hex, M8 x 25, 8.8,
20	86629542	2	NUT, LOCK, M8 x 1.25, Cl 8,
21	86566989	2	STRAP, CABLE,
22	457547	6	CLAMP, , ASN D628
23	743320	3	SUPPORT, , ASN D628
24	367681	1	PLATE, FIXING, , ASN D628
25	86508569	3	BOLT, Hex, M6 x 70, 8.8, , ASN D628

07.249(A 01) HYDRAULICS - FOR LATERALE ONLY

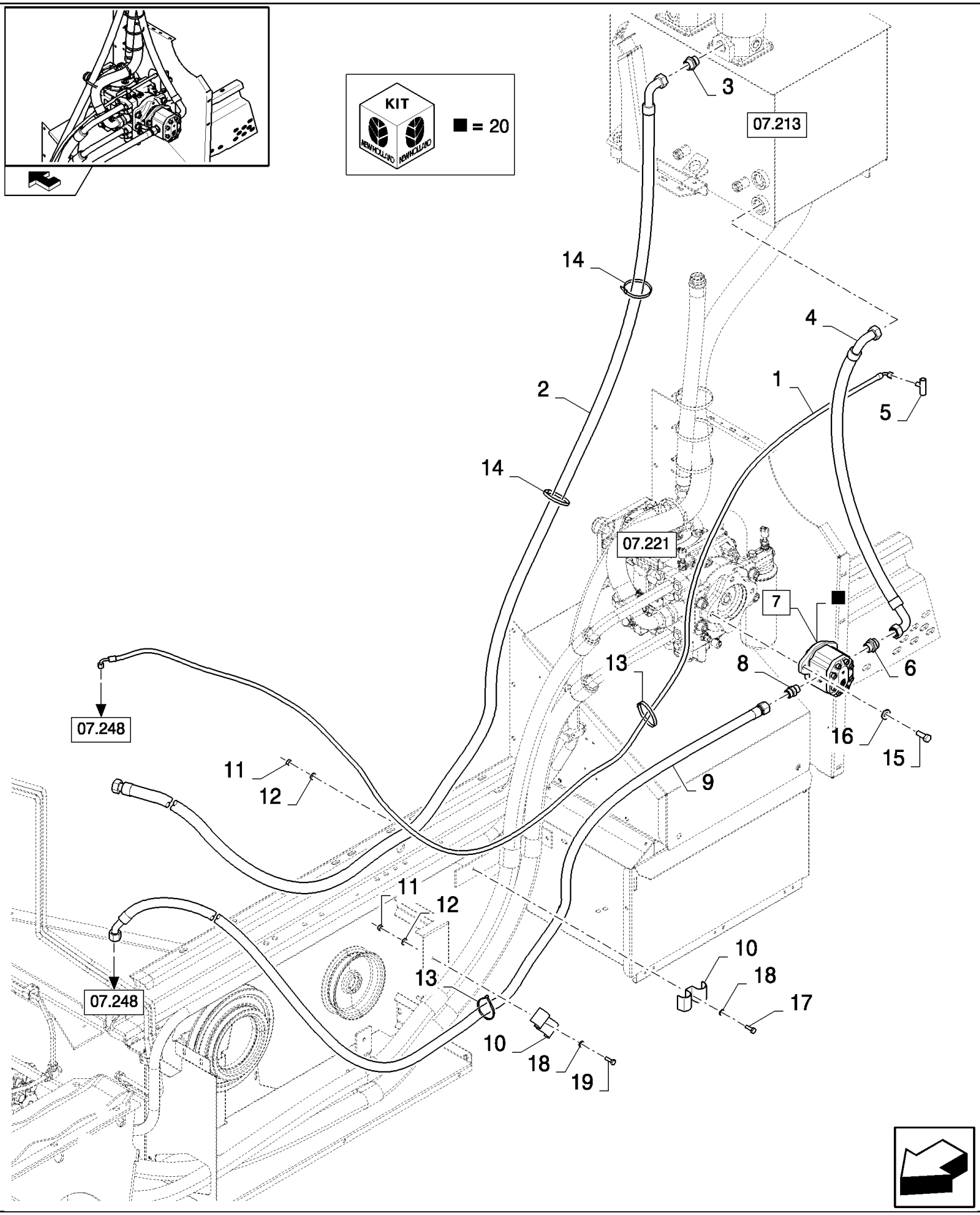

CSX7080 C659 - COMBINE (9/06-8/08)

07.249(A 01) HYDRAULICS - FOR LATERALE ONLY

ссылка	Номер детали	Кол-во	Описание
1	87671744	1	HOSE, FLEXIBLE,
2	87562542	1	HOSE, FLEXIBLE,
3	84032478	1	CONNECTOR, HYD., , BSN C627
3	447241	1	CONNECTOR, HYD., , ASN D628
4	87671730	1	HOSE, FLEXIBLE,
5	84037988	1	CONNECTION, 3 WAY,
6	84074173	1	CONNECTOR, HYD.,
7	87631812	1	PUMP, HYDRAULIC,
8	86579682	1	CONNECTOR, HYD., 1 3/16"-12 ORFS x M27 x 2 ORB,
9	87562539	1	HOSE, FLEXIBLE,
10	84435979	3	CLAMP,
11	9706690	3	NUT, M8, Cl 8,
12	322358	3	WASHER, SPRING, Belleville, M8,
13	86566990	4	STRAP, CABLE,
14	396718	5	STRAP,
15	87670	2	BOLT, Hex, 1/2"-13 x 1 1/4", G5, Full Thd,
16	394630	2	WASHER,
17	43127	2	BOLT, Hex, M8 x 25, 8.8,
18	86624184	3	WASHER, M8 x 16 x 1.6,
19	43128	1	BOLT, Hex, M8 x 30, 8.8,
20	87343312	1	SEAL,

07.250(01) FRAME HYDRAULICS - FOR LATERALE ONLY

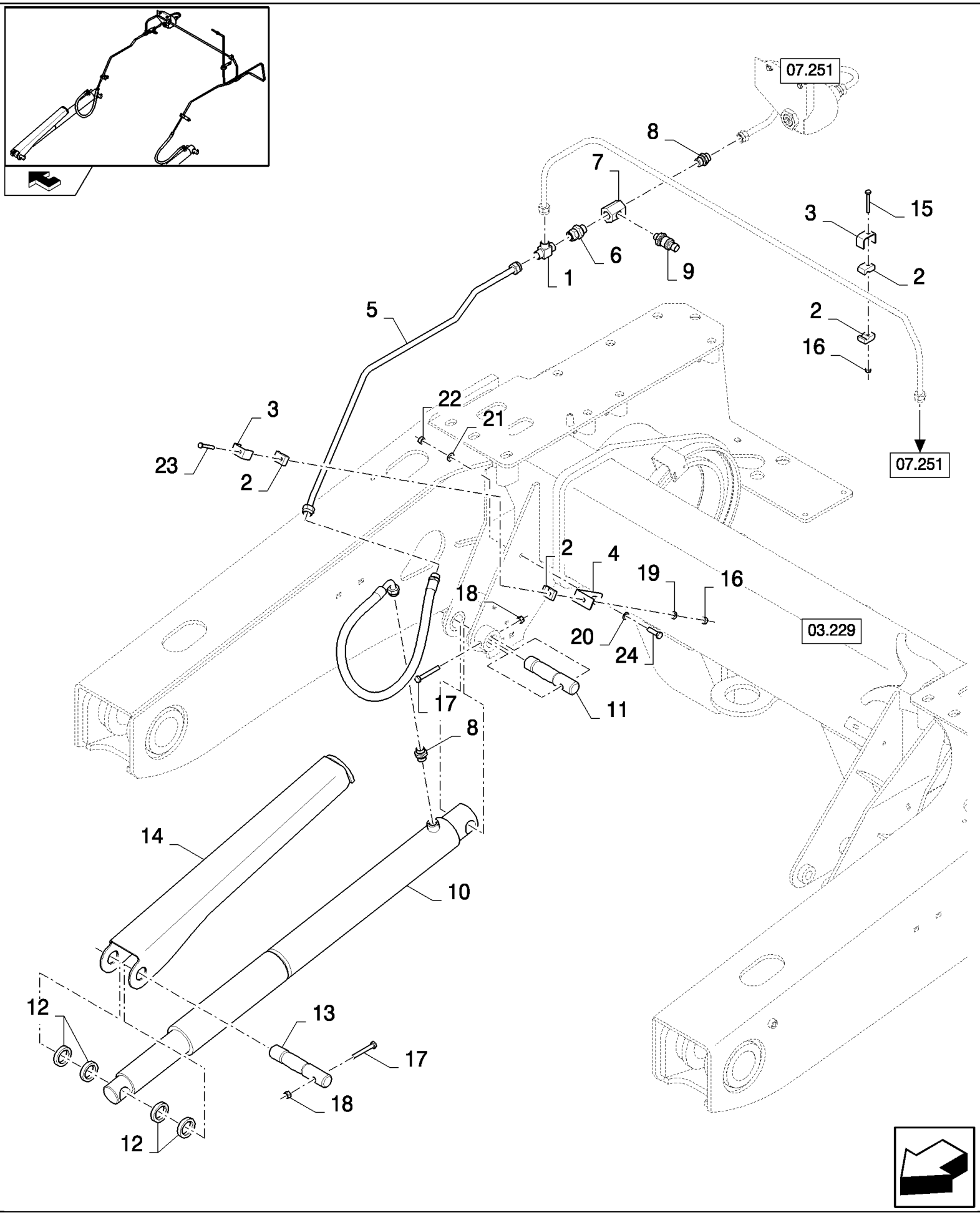

CSX7080 C659 - COMBINE (9/06-8/08)

07.250(01) FRAME HYDRAULICS - FOR LATERALE ONLY

ссылка	Номер детали	Кол-во	Описание
1	150019	1	CONNECTION, 3 WAY,
2	433008	6	CLAMP,
3	442340	3	SUPPORT,
4	87724404	1	SUPPORT,
5	87717146	1	TUBE, HYD,
6	84018409	1	CONNECTOR, HYD.,
7	84334080	1	CONNECTOR, HYD.,
8	395782	2	CONNECTOR, HYD.,
9	86523197	1	SENSOR,
10	87528228	1	HYDRAULIC CYLINDER,
11	87618820	1	PIN,
12	84071307	4	BUSHING,
13	87619174	1	PIN,
14	87539149	1	SUPPORT,
15	412559	2	BOLT, Hex, M6 x 50, 8.8, Full Thd,
16	353308	3	NUT, M6 x 1, Cl 8,
17	120061	2	BOLT, Hex, M8 x 60, 8.8,
18	86629542	2	NUT, LOCK, M8 x 1.25, Cl 8,
19	86588450	1	WASHER, M6,
20	86624184	1	WASHER, M8 x 16 x 1.6,
21	322358	1	WASHER, SPRING, Belleville, M8,
22	9706690	1	NUT, M8, Cl 8,
23	86977790	1	SCREW, Hex, M6 x 45, 8.8,
24	43128	1	BOLT, Hex, M8 x 30, 8.8,

07.251(A 01) FRAME HYDRAULICS - FOR LATERALE ONLY

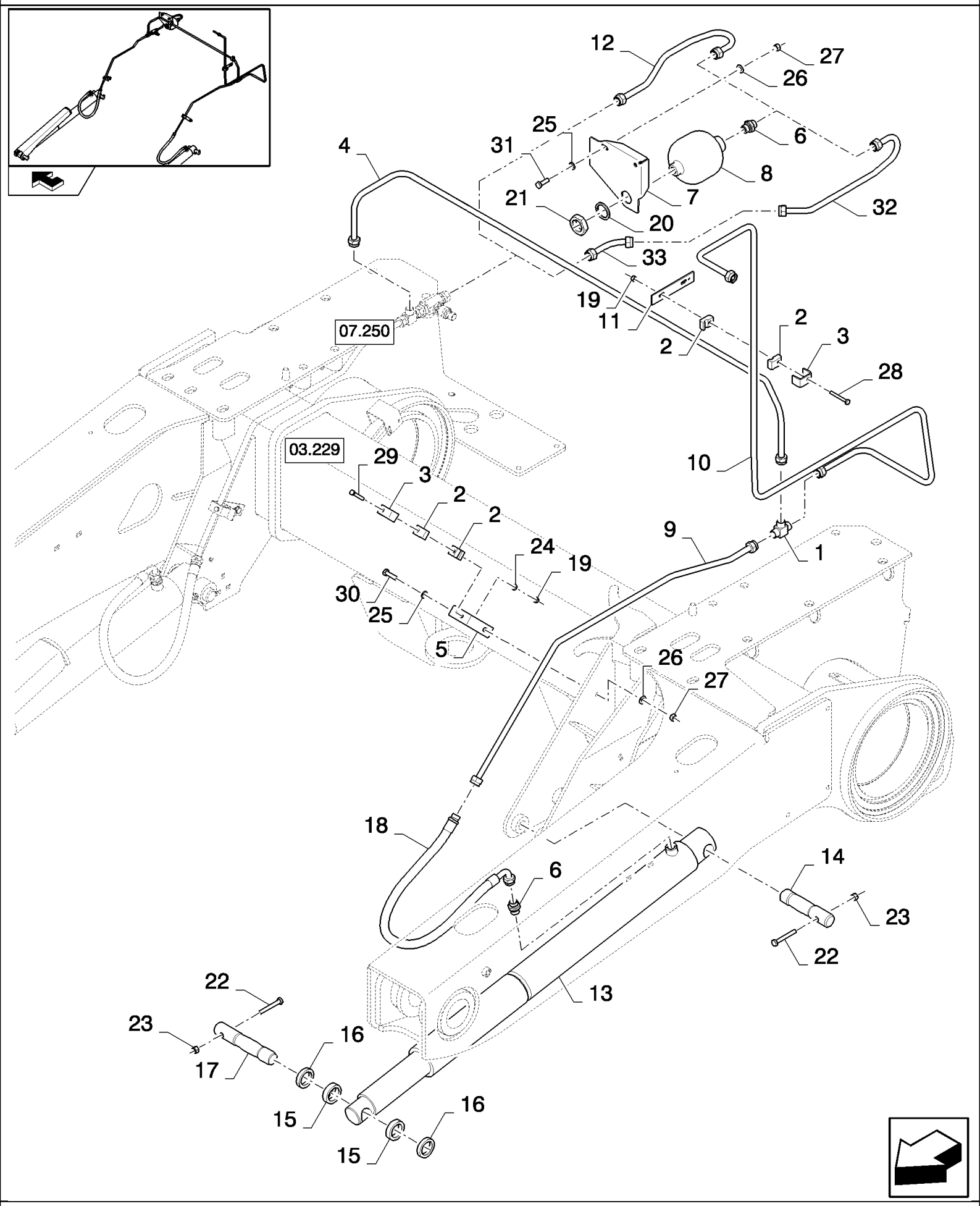

CSX7080 C659 - COMBINE (9/06-8/08)

07.251(A 01) FRAME HYDRAULICS - FOR LATERALE ONLY

ссылка	Номер детали	Кол-во	Описание
1	120019	1	SCREW, Cross Pan Hd, M8 x 20,
2	433008	6	CLAMP,
3	442340	3	SUPPORT,
4	87746794	1	TUBE, HYD,
5	87724404	1	SUPPORT,
6	395782	2	CONNECTOR, HYD.,
7	87745854	1	SUPPORT,
8	84018325	1	ACCUMULATOR,
9	87717144	1	TUBE, HYD,
10	87746792	1	TUBE, HYD,
11	919316	1	SUPPORT,
12	87717142	1	TUBE, HYD, , BSN C619
13	87528228	1	HYDRAULIC CYLINDER,
14	87618820	1	PIN,
15	84073773	2	
16	84071307	2	BUSHING,
17	87619174	1	PIN,
18	87669738	2	HOSE, FLEXIBLE,
19	353308	2	NUT, M6 x 1, Cl 8,
20	140110	1	WASHER,
21	308823	1	NUT, M28 x 1.5, Cl 8,
22	120061	2	BOLT, Hex, M8 x 60, 8.8,
23	86629542	2	NUT, LOCK, M8 x 1.25, Cl 8,
24	86588450	1	WASHER, M6,
25	86624184	3	WASHER, M8 x 16 x 1.6,
26	322358	3	WASHER, SPRING, Belleville, M8,
27	9706690	3	NUT, M8, Cl 8,
28	120056	2	SCREW, Hex, M6 x 50, 8.8,
29	86977790	1	SCREW, Hex, M6 x 45, 8.8,
30	43128	1	BOLT, Hex, M8 x 30, 8.8,
31	43127	2	BOLT, Hex, M8 x 25, 8.8,
32	87486962	1	TUBE, HYD, , ASN D620
33	9508529	1	ELBOW, , ASN D620

SHEET METAL/DECALS	**REVÊTEMENTS EN TÔLE DÉCALCOMANIE**	**CHAPEADOS/CALCOMANÍAS**	**METALPLADEBEKLÆDN. MÆRKATER**
LAMIERATI DECALCOMANIE	**BLECHVERKLEIDUNGEN ABZIEHBILDER**	**REVESTIMENTOS EM CHAPAS/DECALCOMANIAS**	**METALEN PLATEN PLAKPLAATJES**

SEC. 8

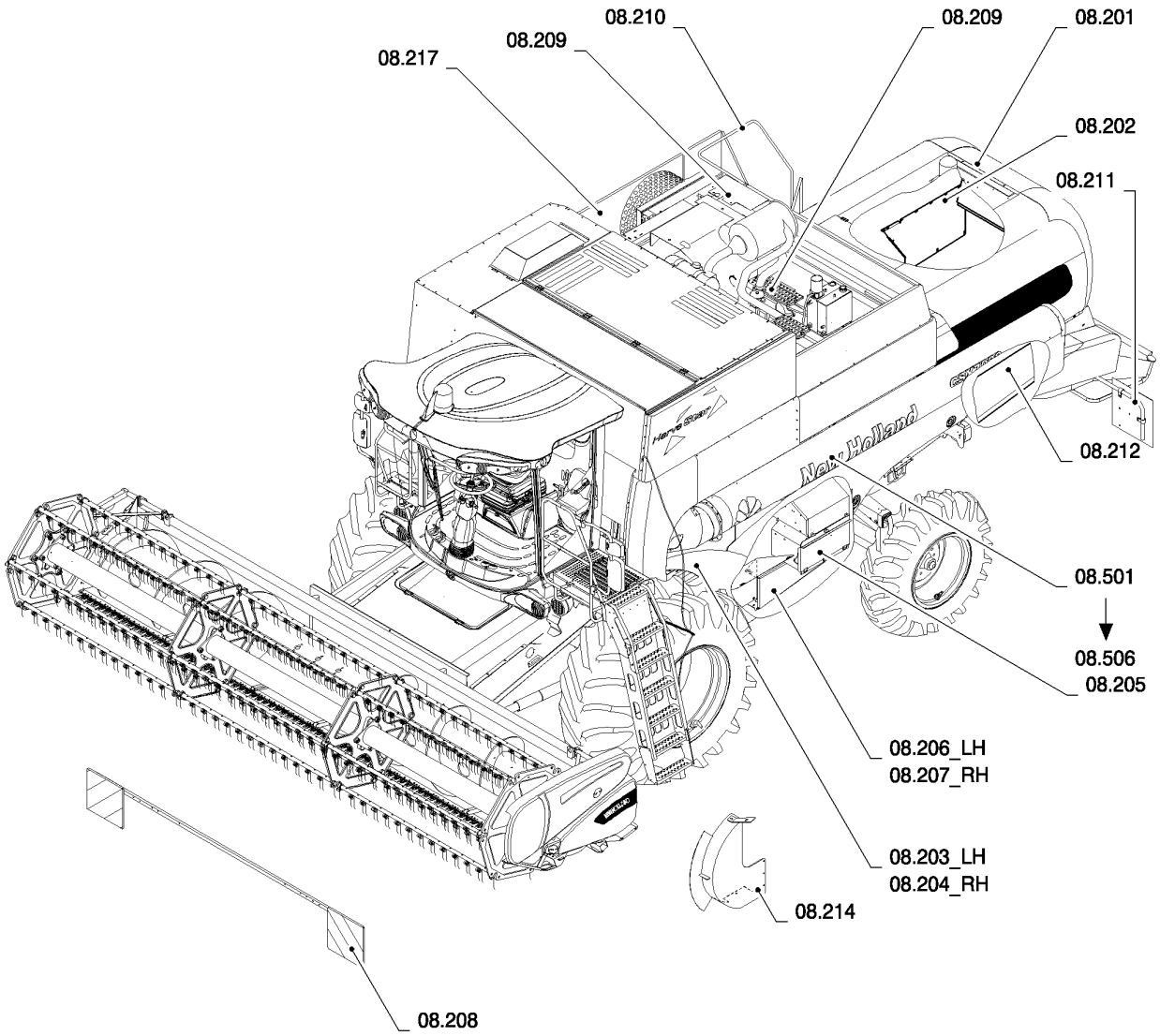

ссылка	Номер детали	Кол-во	Описание

08.201(A 01) STRAW HOOD

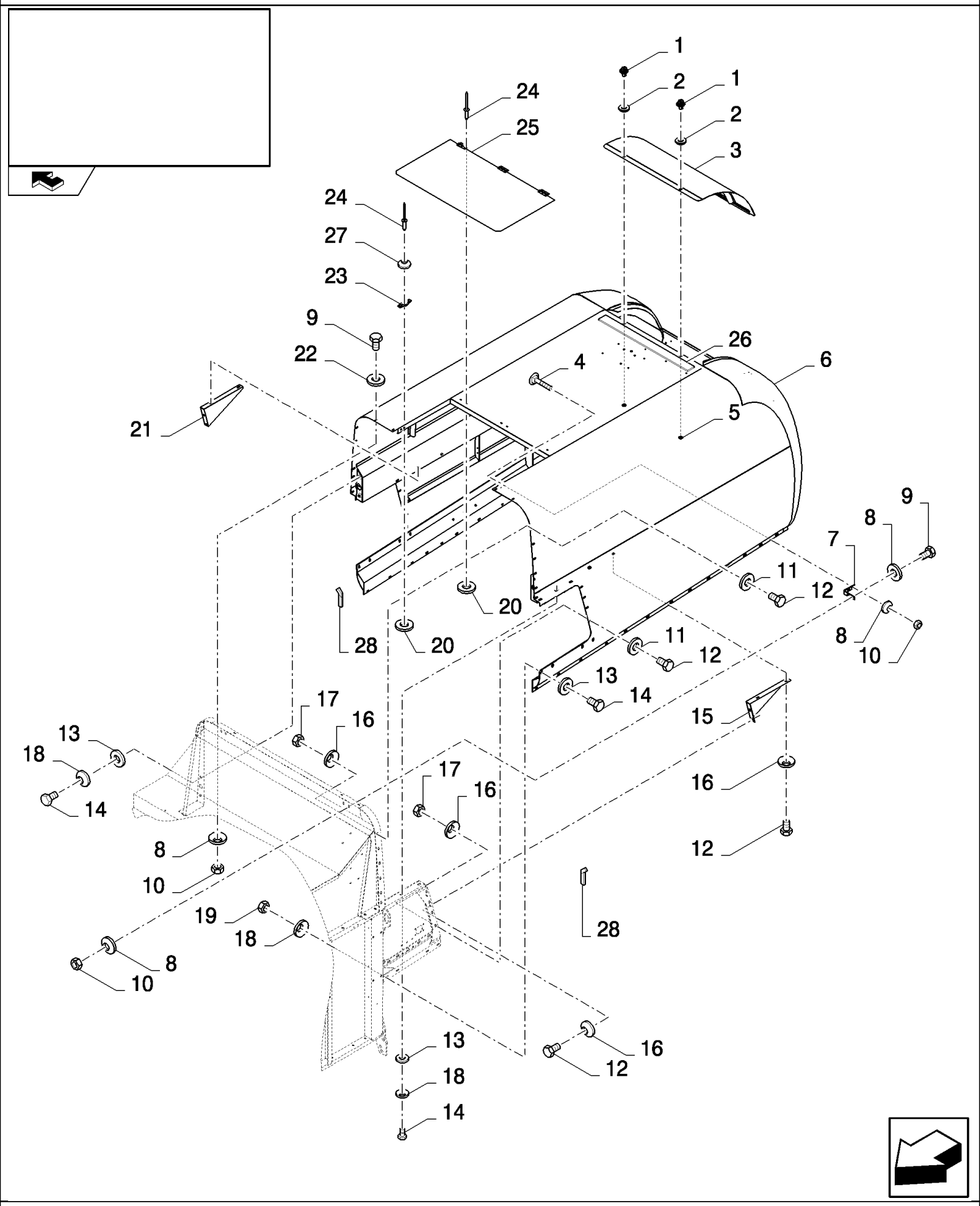

CSX7080 C659 - COMBINE (9/06-8/08)

08.201(A 01) STRAW HOOD

ссылка	Номер детали	Кол-во	Описание
1	9514603	2	LOCK, , BSN C611
2	140018	2	WASHER, M12 x 24 x 2.5, , BSN C611
2	120103	2	BOLT, Hex, M8 x 16, 8.8, , ASN D612
3	84438653	1	COVER, , BSN C611
3	87716378	1	COVER, , ASN D612
4	9706703	4	BOLT, CARRIAGE, Short NK, M6 x 20, Cl8.8, Full Thd,
5	9514605	2	WASHER, , BSN C611
6	84077547	1	HOOD, STRAW, , BSN C611
6	87715210	1	HOOD, STRAW, , ASN D612
7	84433220	2	BRACKET,
8	322357	16	WASHER, SPRING, Belleville, M6,
9	120100	8	BOLT, Hex, M6 x 20, 8.8,
10	9706755	12	NUT, M6, Cl 8,
11	140041	20	WASHER, M8 x 28 x 3,
12	120104	28	SCREW, Hex, M8 x 20, 8.8, , BSN C599
12	43127	28	BOLT, Hex, M8 x 25, 8.8, , ASN D600
13	140042	18	WASHER, M10 x 34 x 3,
14	43139	18	SCREW, Hex, M10 x 25, 8.8, Full Thd, M10x25
15	84077198	1	PLATE,
16	322358	28	WASHER, SPRING, Belleville, M8, , BSN C611
16	322358	30	WASHER, SPRING, Belleville, M8, , ASN D612
17	9706690	20	NUT, M8, Cl 8,
18	140045	18	WASHER, SPRING, Belleville, M10,
19	100016	8	NUT, M10, Cl 8,
20	335872	8	WASHER, 4MM
21	84077195	1	PLATE,
22	140040	4	WASHER, M6 x 22 x 2,
23	362786	2	FASTENER,
24	446453	8	RIVET,
25	84077082	1	COVER,
26	401502	AR	STRIP, ANTI-SKID, 51mm x 18.3 Roll - Cut to Size
27	362785	2	WASHER,
28	9837990	AR	L=0.34M

08.202(A 01) STRAW HOOD, PLATES FOR STRAWCHOPPER

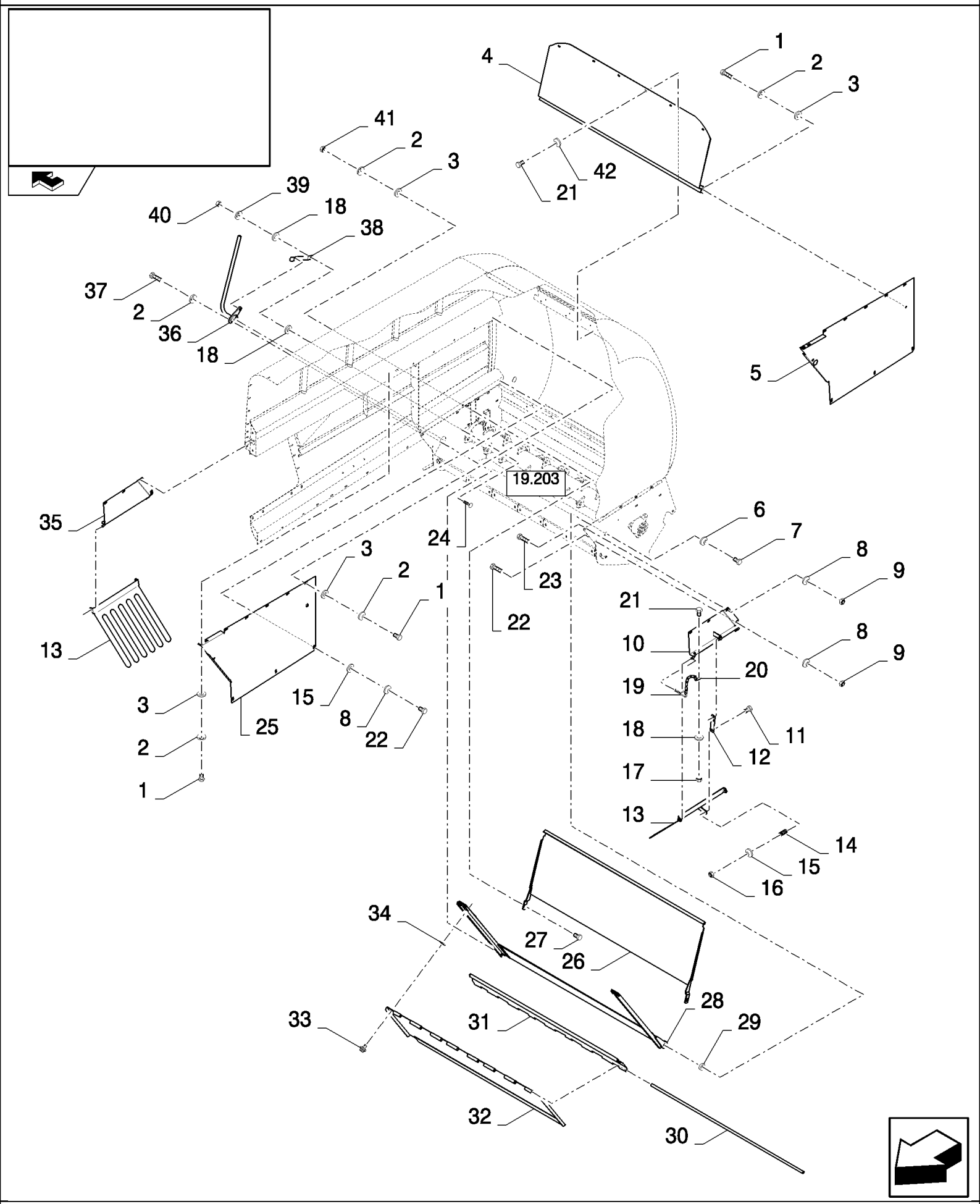

CSX7080 C659 - COMBINE (9/06-8/08)

08.202(A 01) STRAW HOOD, PLATES FOR STRAWCHOPPER

ссылка	Номер детали	Кол-во	Описание
1	120104	16	SCREW, Hex, M8 x 20, 8.8,
2	322358	20	WASHER, SPRING, Belleville, M8,
3	140041	18	WASHER, M8 x 28 x 3,
4	84434841	1	DEFLECTOR,
5	84434246	1	PLATE,
6	140048	1	WASHER, SPRING, Belleville, M16,
7	43167	1	BOLT, Hex, M16 x 30, 8.8, Full Thd,
8	140045	14	WASHER, SPRING, Belleville, M10,
9	100016	8	NUT, M10, Cl 8,
10	84433778	1	SUPPORT,
11	325829	2	BOLT, Hex, M10 x 45, 8.8, M10x45
12	84434208	2	BRACKET,
13	84433715	2	RAKE,
14	180072	2	SPRING,
15	140017	8	WASHER, M10 x 20 x 2,
16	100037	2	NUT, M10 x 1.5, Cl 8,
17	9706755	2	NUT, M6, Cl 8,
18	9824259	4	WASHER, M6 x 12 x 1.6,
19	370539	2	PIN, SPLIT (COTTER),
20	89839041	2	CHAIN,
21	86508568	8	SCREW, Hex, M6 x 16, 8.8,
22	43138	8	SCREW, Hex, M10 x 20, 8.8, Full Thd,
23	338949	6	BOLT, CARRIAGE, Short NK, M10 x 25, Cl8.8, Full Thd,
24	374891	1	BOLT, CARRIAGE, Short NK, M6 x 25, Cl8.8, Full Thd,
25	84434345	1	PLATE,
26	84434844	1	DEFLECTOR,
27	120038	2	BOLT, CARRIAGE, Short NK, M8 x 30, Cl8.8, Full Thd,
28	84439336	1	DEFLECTOR,
29	84444700	1	BUSHING,
30	84439312	1	TUBE,
31	84441462	1	DEFLECTOR,
32	84439346	1	DEFLECTOR,
33	89514603	2	LOCK,
34	9514605	2	WASHER,
35	84433929	1	SUPPORT,
36	84434503	1	LEVER,
37	43128	2	BOLT, Hex, M8 x 30, 8.8,
38	84440371	1	CLIP,
39	322357	1	WASHER, SPRING, Belleville, M6,
40	353308	1	NUT, M6 x 1, Cl 8,
41	9706690	2	NUT, M8, Cl 8,
42	412649	6	WASHER, SPRING, Belleville, M6,

08.203(A 01) UPPER SHIELDS, LH

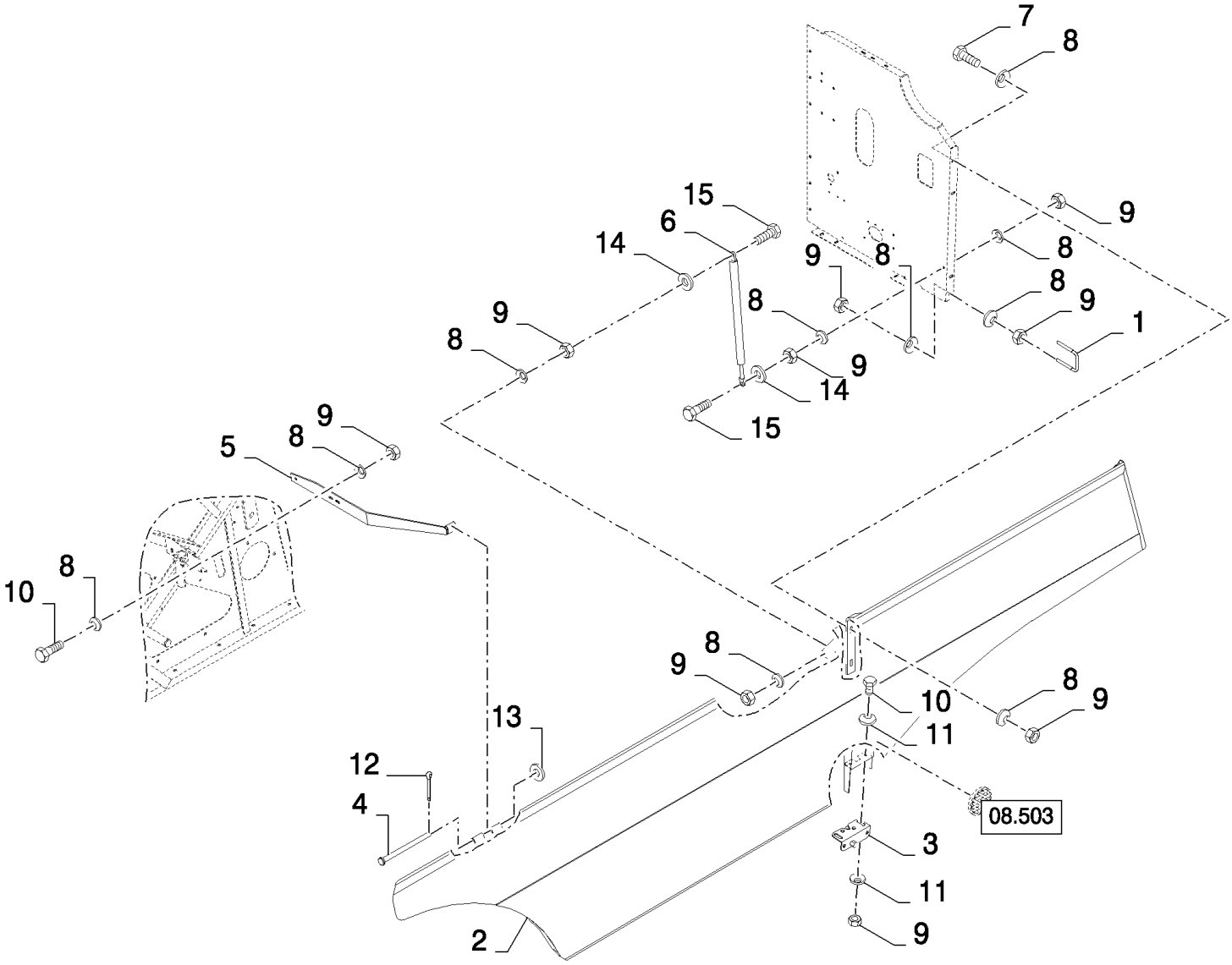

CSX7080 C659 - COMBINE (9/06-8/08)

08.203(A 01) UPPER SHIELDS, LH

ссылка	Номер детали	Кол-во	Описание
1	84434067	1	U-BOLT,
2	87348034	1	SHIELD,
2	87583878	1	SHIELD, , FOR LATERALE ONLY
3	84015292	1	LOCK,
4	86605626	1	PIN, CLEVIS, M10 x 150,
5	87348055	1	SUPPORT,
6	84438915	1	GAS STRUT,
7	43127	2	BOLT, Hex, M8 x 25, 8.8,
8	412650	18	WASHER, Belleville, M8,
9	9706690	15	NUT, M8, Cl 8,
10	120104	5	SCREW, Hex, M8 x 20, 8.8,
11	322358	4	WASHER, SPRING, Belleville, M8,
12	130003	1	PIN, SPLIT (COTTER), M3.2 x 20,
13	378244	1	WASHER, M10,
14	394628	2	WASHER,
15	412479	2	BOLT, Hex, M8 x 35, 8.8,

08.204(A 01) LOWER SHIELDS, RH

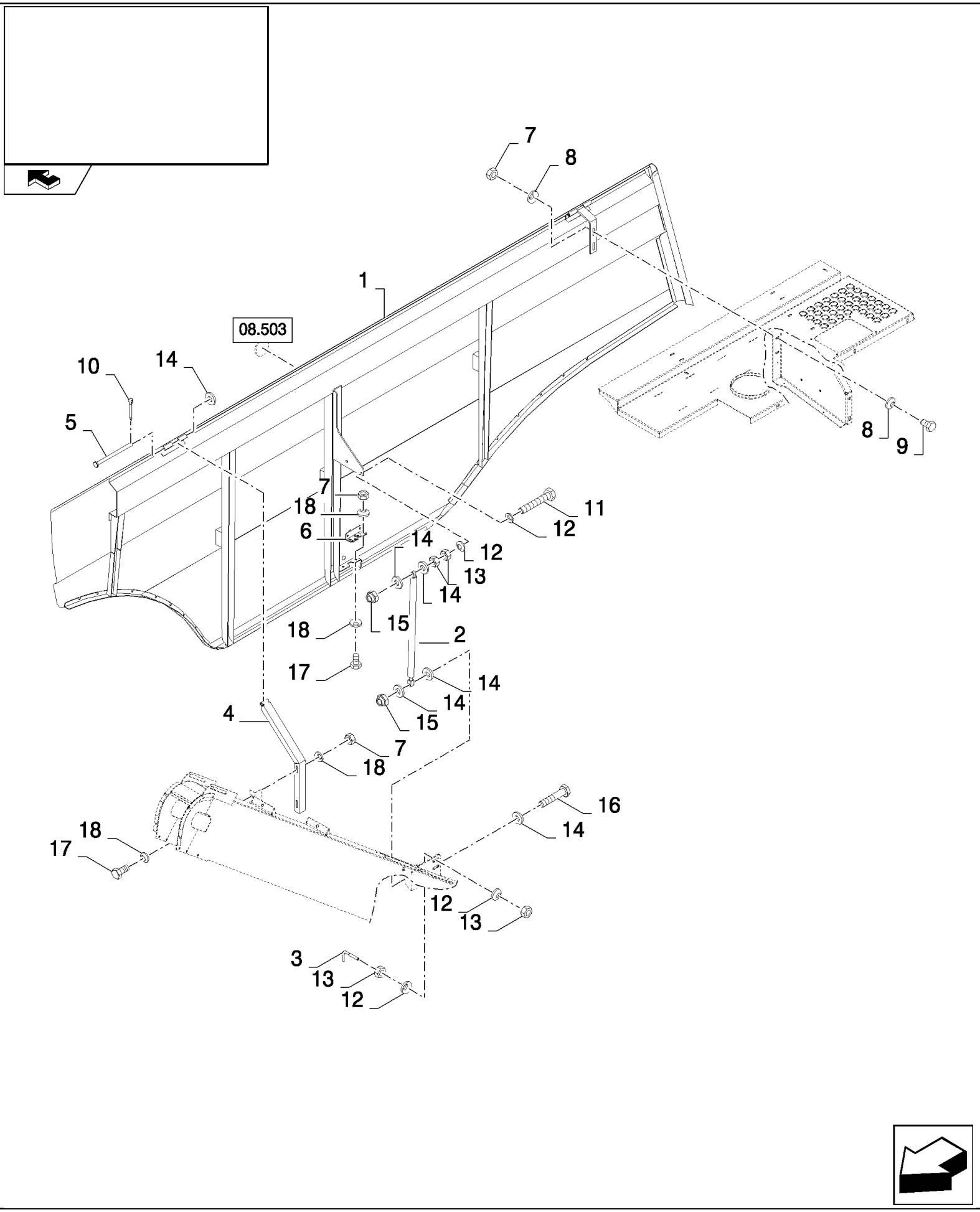

CSX7080 C659 - COMBINE (9/06-8/08)

08.204(A 01) LOWER SHIELDS, RH

ссылка	Номер детали	Кол-во	Описание
1	87381211	1	
2	87583794	1	, FOR LATERALE ONLY
2	87379454	1	GAS STRUT,
3	87344404	4	BRACKET,
4	87344407	1	HINGE,
5	86605626	1	PIN, CLEVIS, M10 x 150,
6	84015292	1	LOCK,
7	9706690	6	NUT, M8, Cl 8,
8	412650	4	WASHER, Belleville, M8,
9	43127	2	BOLT, Hex, M8 x 25, 8.8,
10	130003	1	PIN, SPLIT (COTTER), M3.2 x 20,
11	86977775	1	BOLT, Hex, M10 x 60, 8.8, Full Thd,
12	140045	4	WASHER, SPRING, Belleville, M10,
13	100016	4	NUT, M10, Cl 8,
14	86511323	6	WASHER, M10 x 20 x 2,
15	100037	2	NUT, M10 x 1.5, Cl 8,
16	120069	1	SCREW, Hex, M10 x 50, 8.8,
17	120104	4	SCREW, Hex, M8 x 20, 8.8,
18	322358	8	WASHER, SPRING, Belleville, M8,

08.205(A 01) TOOLBOX AND BATTERY SUPPORT

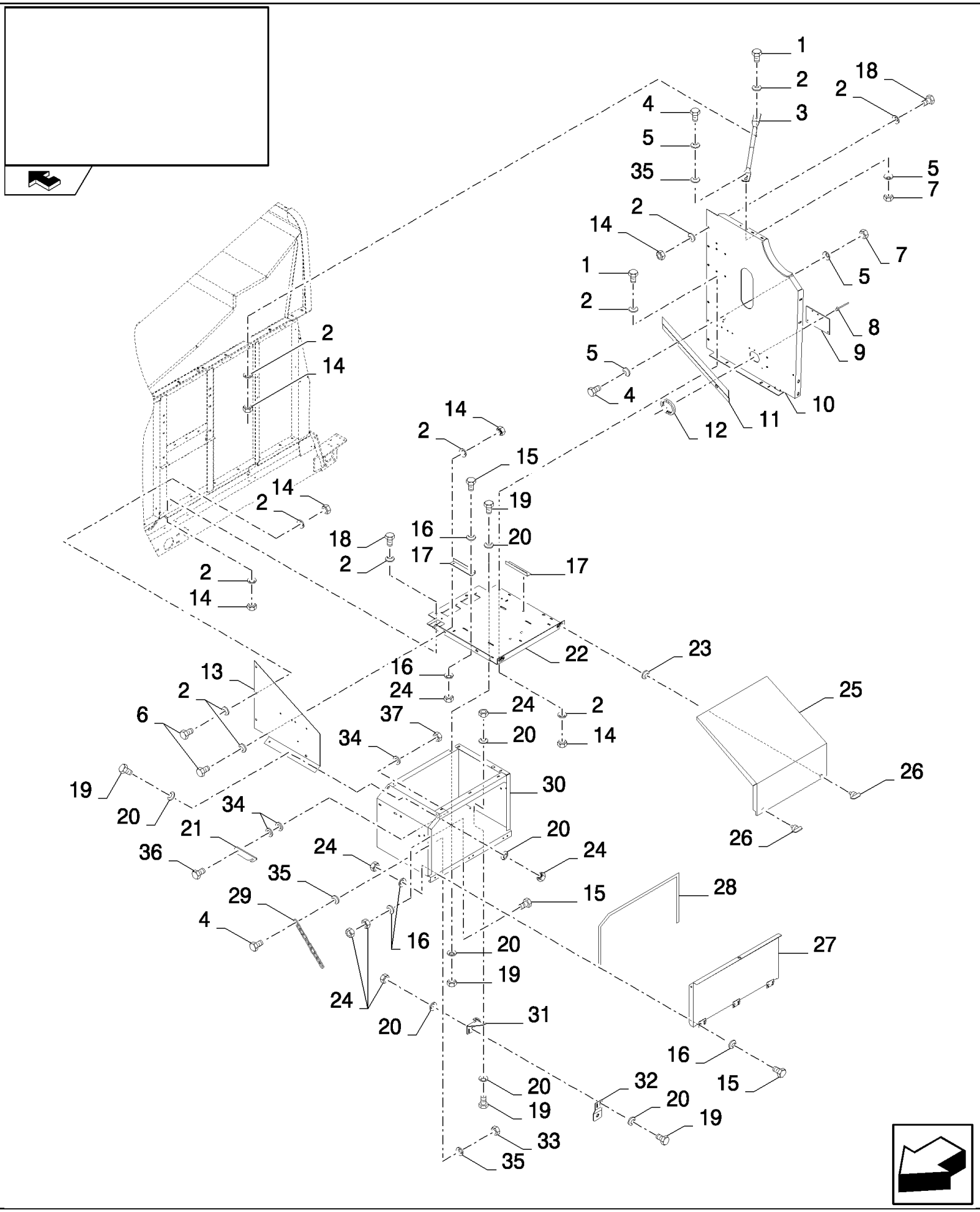

CSX7080 C659 - COMBINE (9/06-8/08)

08.205(A 01) TOOLBOX AND BATTERY SUPPORT

ссылка	Номер детали	Кол-во	Описание
1	43139	3	SCREW, Hex, M10 x 25, 8.8, Full Thd, M10x25
2	140045	32	WASHER, SPRING, Belleville, M10, , BSN C547
2	140045	30	WASHER, SPRING, Belleville, M10, , ASN D548
3	84435777	1	SUPPORT,
4	120104	7	SCREW, Hex, M8 x 20, 8.8,
5	322358	6	WASHER, SPRING, Belleville, M8,
6	43138	9	SCREW, Hex, M10 x 20, 8.8, Full Thd,
7	9706690	3	NUT, M8, Cl 8,
8	NS	5	NOT SERVICED, Rivet
9	84444207	1	CANVAS,
10	87348057	1	PLATE,
11	87391869	1	PLATE,
12	NS	1	NOT SERVICED, L=0.202M
13	87391865	1	PLATE,
14	100016	16	NUT, M10, Cl 8, , BSN C547
14	100016	14	NUT, M10, Cl 8, , ASN D548
15	86508568	12	SCREW, Hex, M6 x 16, 8.8,
16	322357	22	WASHER, SPRING, Belleville, M6,
17	84431924	2	BRACKET,
18	43140	4	BOLT, Hex, M10 x 30, 8.8, Full Thd,
19	120100	13	BOLT, Hex, M6 x 20, 8.8,
20	412649	26	WASHER, SPRING, Belleville, M6,
21	84443520	2	HOOK,
22	87392005	1	PLATE,
23	9514605	2	WASHER,
24	9706755	27	NUT, M6, Cl 8,
25	87391860	1	COVER,
26	9831581	2	LOCK,
27	84443561	1	COVER,
28	401209	1	SEAL PROTECTION, L=1.160M
29	84058873	2	CHAIN,
30	87392002	1	TOOL BOX, COMPLETE,
31	84455279	1	SUPPORT,
32	84443563	1	BRACKET,
33	86629542	4	NUT, LOCK, M8 x 1.25, Cl 8,
34	140040	6	WASHER, M6 x 22 x 2,
35	140041	9	WASHER, M8 x 28 x 3,
36	9706703	2	BOLT, CARRIAGE, Short NK, M6 x 20, Cl8.8, Full Thd,
37	353308	2	NUT, M6 x 1, Cl 8,

08.206(01) LOWER SHIELDS, LH

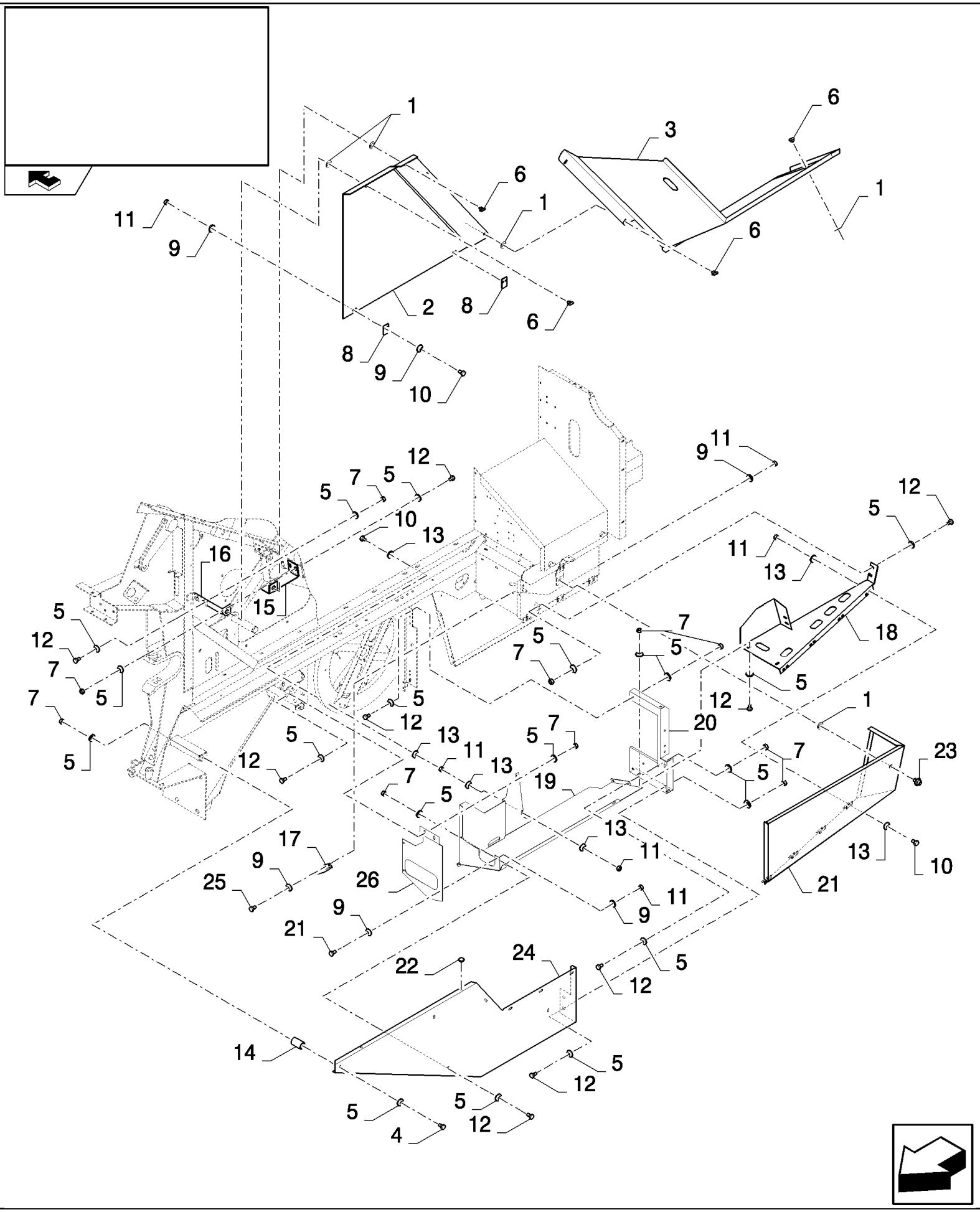

CSX7080 C659 - COMBINE (9/06-8/08)

08.206(01) LOWER SHIELDS, LH

ссылка	Номер детали	Кол-во	Описание
1	9514605	6	WASHER,
2	84443864	1	SHIELD,
3	84462924	1	SHIELD,
4	120061	2	BOLT, Hex, M8 x 60, 8.8,
5	322358	44	WASHER, SPRING, Belleville, M8,
6	9831581	5	LOCK,
7	9706690	22	NUT, M8, Cl 8,
8	84334503	2	PLATE, PLASTIC,
9	322357	12	WASHER, SPRING, Belleville, M6,
10	120100	4	BOLT, Hex, M6 x 20, 8.8,
11	9706755	18	NUT, M6, Cl 8,
12	120104	20	SCREW, Hex, M8 x 20, 8.8,
13	412649	24	WASHER, SPRING, Belleville, M6,
14	84458653	1	BUSHING, SPLINED,
15	84334692	1	SUPPORT,
16	84334691	1	SUPPORT,
17	84462928	1	PLATE,
18	84448548	1	PLATE,
19	87527000	1	SHIELD,
20	87527058	1	SUPPORT,
21	84989591	1	SHIELD,
22	331233	2	PLUG,
23	89514603	1	LOCK,
24	84444602	1	SHIELD,
25	86508568	2	SCREW, Hex, M6 x 16, 8.8,
26	87527283	1	PLATE, , FOR 20 KM/H ONLY
26	87527285	1	PLATE, , FOR STANDARD, MUDDY CONDITIONS ONLY

CSX7080 C659 - COMBINE (9/06-8/08)

08.206(B 01) LOWER SHIELDS, LH, FOR POWERED STEERING AXLE - D564

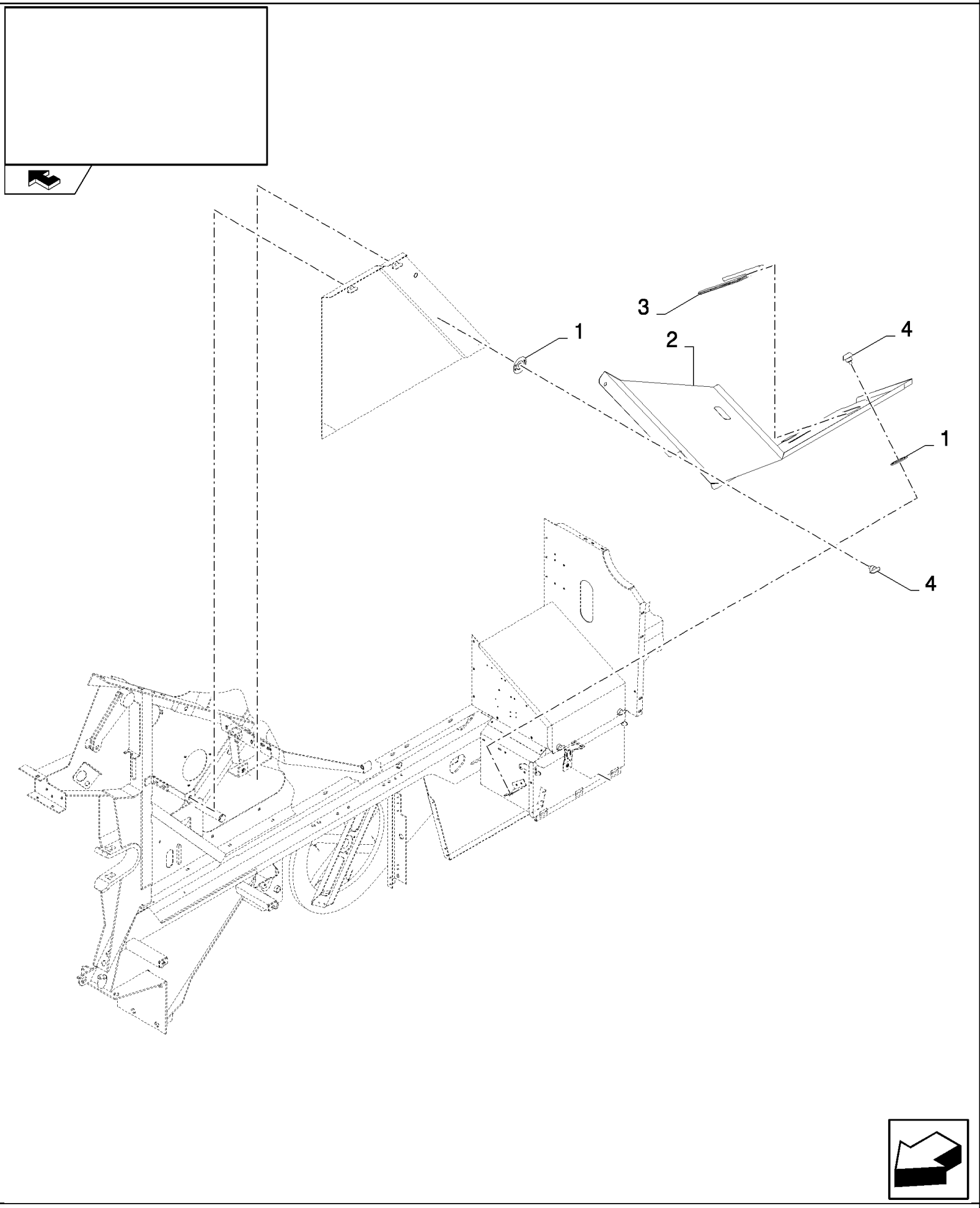

CSX7080 C659 - COMBINE (9/06-8/08)

08.206(B 01) LOWER SHIELDS, LH, FOR POWERED STEERING AXLE - D564

ссылка	Номер детали	Кол-во	Описание
1	9514605	3	WASHER,
2	87588441	1	PLATE,
3	401108	1	SHIELD, L=0.71M
4	9831581	3	LOCK,

CSX7080 C659 - COMBINE (9/06-8/08)

08.206(C 01) LOWER SHILEDS, LH - FOR LATERALE ONLY

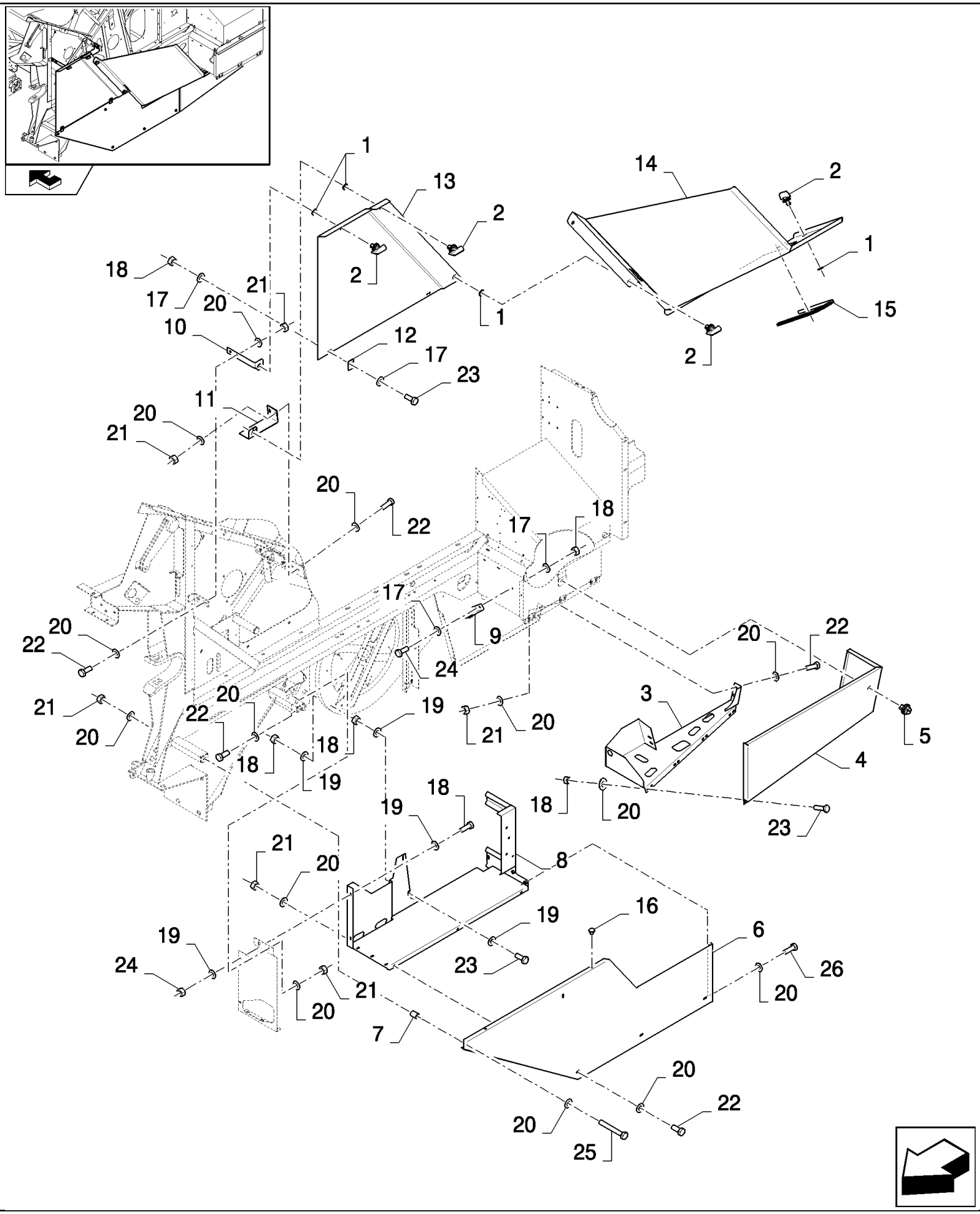

CSX7080 C659 - COMBINE (9/06-8/08)

08.206(C 01) LOWER SHILEDS, LH - FOR LATERALE ONLY

ссылка	Номер детали	Кол-во	Описание
1	9514605	6	WASHER,
2	9831851	5	
3	87719134	1	SHIELD,
4	84989591	1	SHIELD,
5	9514603	1	LOCK,
6	87732168	1	PLATE,
7	84458653	2	BUSHING, SPLINED,
8	87695585	1	SHIELD,
9	84462928	1	PLATE,
10	84334691	1	SUPPORT,
11	84334692	1	SUPPORT,
12	84334503	2	PLATE, PLASTIC,
13	87738075	1	SHIELD,
14	87675857	1	PLATE,
15	401108	1	SHIELD, L=0.71m
16	331233	2	PLUG,
17	322357	12	WASHER, SPRING, Belleville, M6,
18	9706755	23	NUT, M6, Cl 8,
19	412649	18	WASHER, SPRING, Belleville, M6,
20	322358	38	WASHER, SPRING, Belleville, M8,
21	9706690	14	NUT, M8, Cl 8,
22	120104	12	SCREW, Hex, M8 x 20, 8.8,
23	120100	14	BOLT, Hex, M6 x 20, 8.8,
24	86508568	7	SCREW, Hex, M6 x 16, 8.8,
25	120061	2	BOLT, Hex, M8 x 60, 8.8,
26	120103	2	BOLT, Hex, M8 x 16, 8.8,

08.207(A 01) LOWER SHIELDS, RH

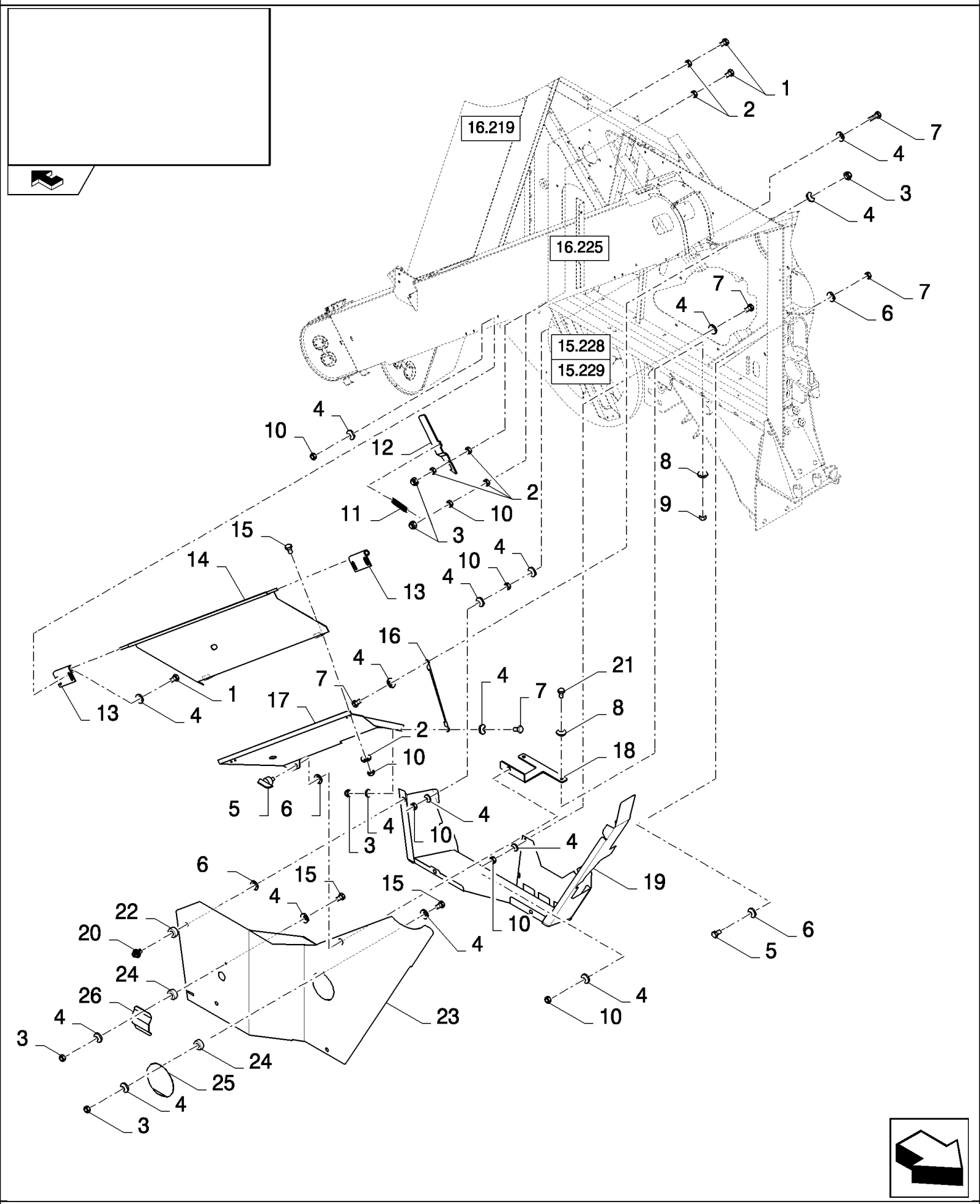

CSX7080 C659 - COMBINE (9/06-8/08)

08.207(A 01) LOWER SHIELDS, RH

ссылка	Номер детали	Кол-во	Описание
1	86977786	6	BOLT, Hex, M6 x 25, 8.8,
2	322357	9	WASHER, SPRING, Belleville, M6,
3	353308	6	NUT, M6 x 1, Cl 8,
4	412649	36	WASHER, SPRING, Belleville, M6,
5	9831581	1	LOCK,
6	9514605	4	WASHER, 12MM
7	120100	7	BOLT, Hex, M6 x 20, 8.8,
8	140045	4	WASHER, SPRING, Belleville, M10,
9	100016	2	NUT, M10, Cl 8,
10	9706755	19	NUT, M6, Cl 8,
11	338713	1	SPRING,
12	84432889	1	BRACKET,
13	84989131	2	HINGE,
14	84989124	1	PLATE,
15	86508568	6	SCREW, Hex, M6 x 16, 8.8,
16	84440516	1	CHAIN,
17	84452610	1	PLATE,
18	84989110	1	PLATE,
19	84461238	1	PLATE,
20	89514603	3	LOCK,
21	43140	2	BOLT, Hex, M10 x 30, 8.8, Full Thd,
22	86511324	3	WASHER, M12 x 24 x 2.5,
23	84461089	1	PLATE,
24	86588450	2	WASHER, M6,
25	84437160	1	COVER,
26	84437668	1	COVER,

08.207(B 01) LOWER SHIELDS, RH - FOR LATERALE ONLY

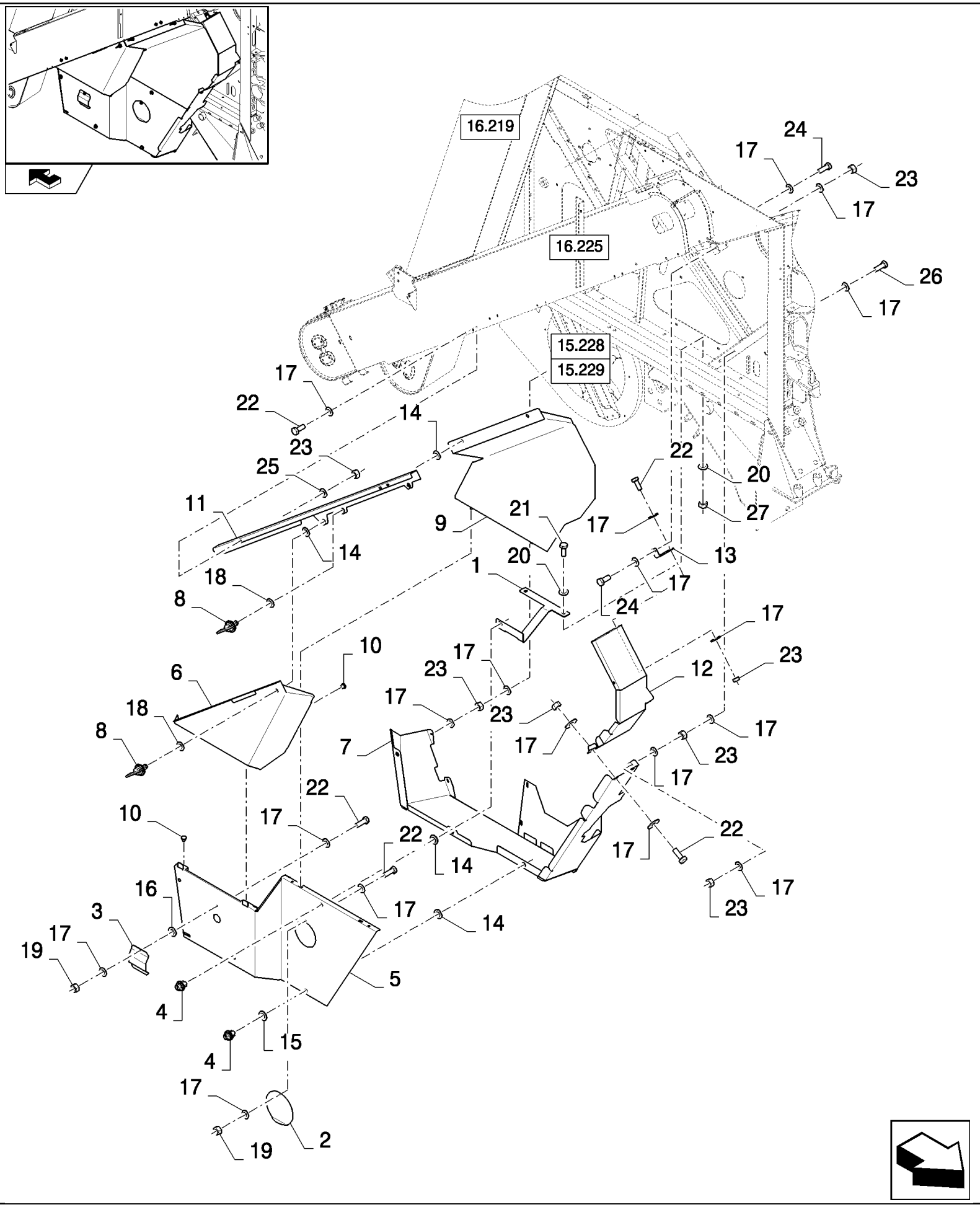

CSX7080 C659 - COMBINE (9/06-8/08)

08.207(B 01) LOWER SHIELDS, RH - FOR LATERALE ONLY

ссылка	Номер детали	Кол-во	Описание
1	87719611	1	PLATE, MOUNTING,
2	84437160	1	COVER,
3	84437668	1	COVER,
4	9514603	4	LOCK,
5	87699552	1	PLATE,
6	87699554	1	PLATE,
7	87699547	1	SHIELD,
8	9831581	3	LOCK,
9	87718362	1	PLATE,
10	331233	7	PLUG,
11	87720488	1	PLATE,
12	87720489	1	PLATE,
13	87728125	1	SUPPORT,
14	9514605	7	WASHER,
15	86511324	3	WASHER, M12 x 24 x 2.5,
16	86588450	2	WASHER, M6,
17	412649	40	WASHER, SPRING, Belleville, M6,
18	140223	3	WASHER,
19	353308	2	NUT, M6 x 1, Cl 8,
20	140045	4	WASHER, SPRING, Belleville, M10,
21	43140	2	BOLT, Hex, M10 x 30, 8.8, Full Thd,
22	86508568	10	SCREW, Hex, M6 x 16, 8.8,
23	9706755	20	NUT, M6, Cl 8,
24	120100	6	BOLT, Hex, M6 x 20, 8.8,
25	322357	4	WASHER, SPRING, Belleville, M6,
26	86977786	1	BOLT, Hex, M6 x 25, 8.8,
27	100016	2	NUT, M10, Cl 8,

08.208(01) SIGNAL PLATES - C599

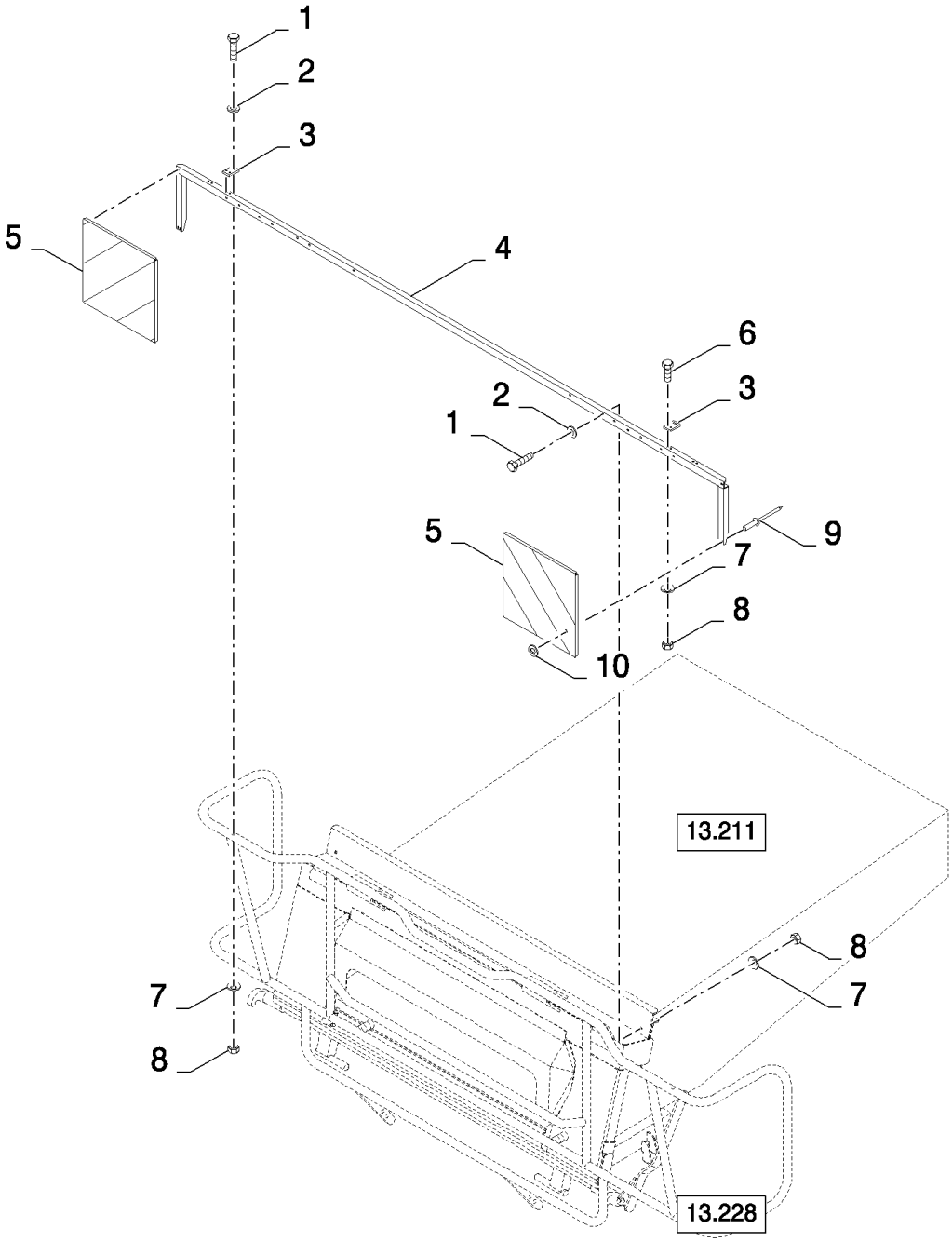

CSX7080 C659 - COMBINE (9/06-8/08)

08.208(01) SIGNAL PLATES - C599

ссылка	Номер детали	Кол-во	Описание
1	43118	2	BOLT, Hex, M6 x 40, 8.8,
2	86588450	2	WASHER, M6,
3	84818296	2	SUPPORT,
4	9502877	1	SUPPORT,
5	84607381	2	PLATE,
6	86508568	4	SCREW, Hex, M6 x 16, 8.8,
7	322357	6	WASHER, SPRING, Belleville, M6,
8	9706755	6	NUT, M6, Cl 8,
9	425523	6	RIVET,
10	9824840	6	WASHER, M4,

08.208(A 01) SIGNAL PLATES - D600

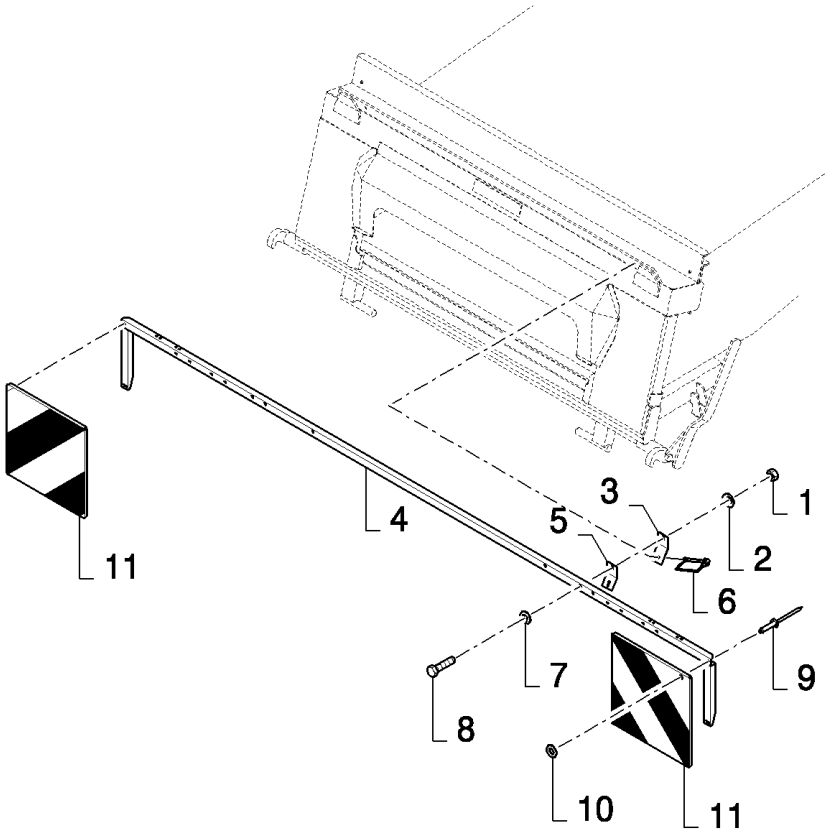

CSX7080 C659 - COMBINE (9/06-8/08)

08.208(A 01) SIGNAL PLATES - D600

ссылка	Номер детали	Кол-во	Описание
1	43118	2	BOLT, Hex, M6 x 40, 8.8,
2	140015	2	WASHER,
3	87601913	2	BRACKET,
4	87571022	2	PROFILE,
5	87601914	2	BRACKET,
6	647695	2	PIN,
7	322357	2	WASHER, SPRING, Belleville, M6,
8	9706755	2	NUT, M6, Cl 8,
9	425523	6	RIVET, RIVET
10	9824840	6	WASHER, M4,
11	84607381	2	PLATE,

CSX7080 C659 - COMBINE (9/06-8/08)

08.209(B 01) ENGINE GUARDS AND PLATFORM LADDER

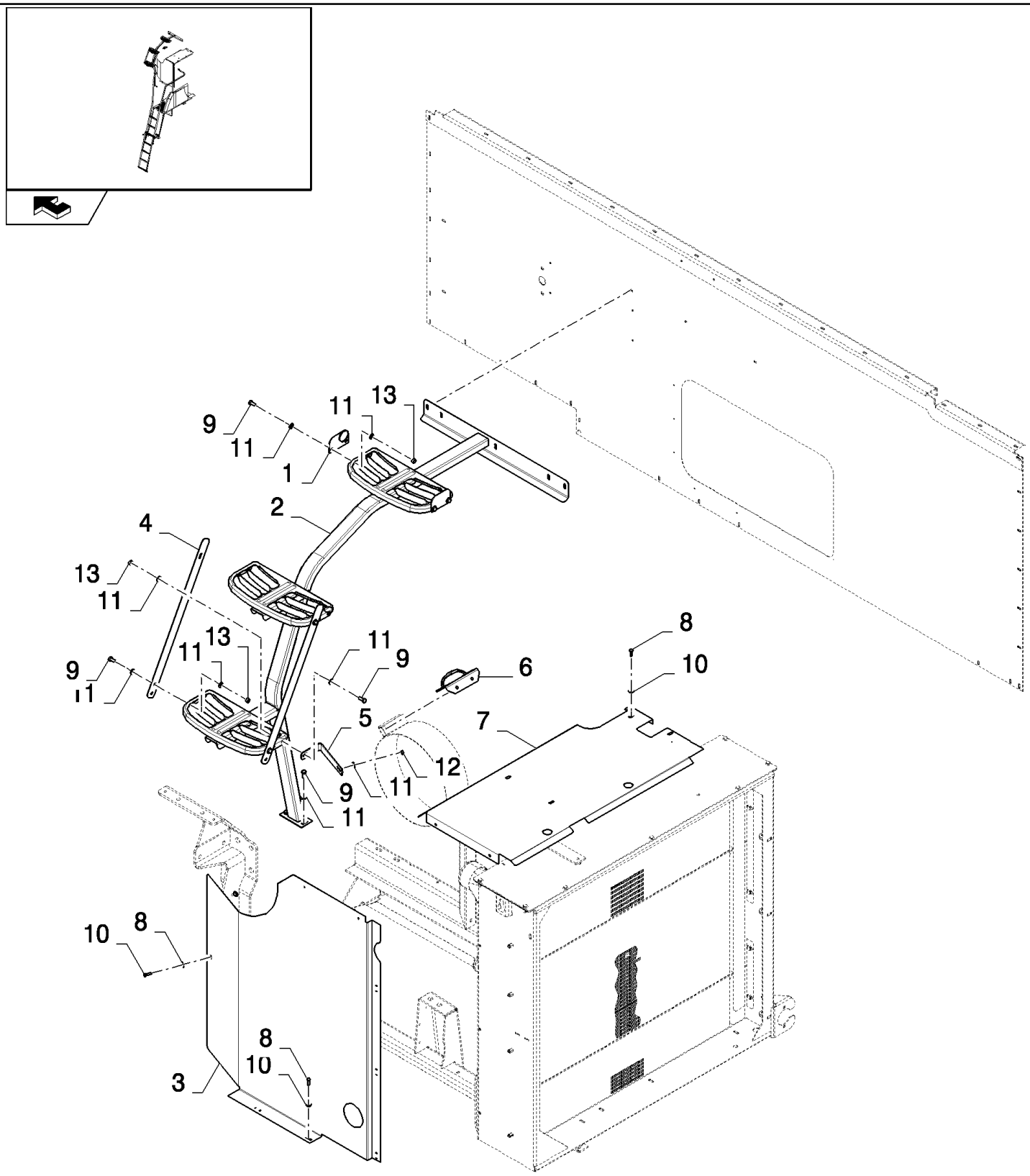

CSX7080 C659 - COMBINE (9/06-8/08)

08.209(B 01) ENGINE GUARDS AND PLATFORM LADDER

ссылка	Номер детали	Кол-во	Описание
1	87335169	2	PLATE,
2	84460111	1	STEP,
3	84457962	1	SHIELD,
4	87334874	2	SLAT,
5	84460889	1	BRACKET,
6	87334774	1	HANDLE,
7	84458003	1	SHIELD,
8	120100	12	BOLT, Hex, M6 x 20, 8.8,
9	120104	11	SCREW, Hex, M8 x 20, 8.8,
10	412649	13	WASHER, SPRING, Belleville, M6,
11	322358	20	WASHER, SPRING, Belleville, M8,
12	9706755	1	NUT, M6, Cl 8,
13	9706690	9	NUT, M8, Cl 8,

08.209(C 01) ENGINE GUARDS AND PLATFORM LADDER - FOR LATERALE ONLY

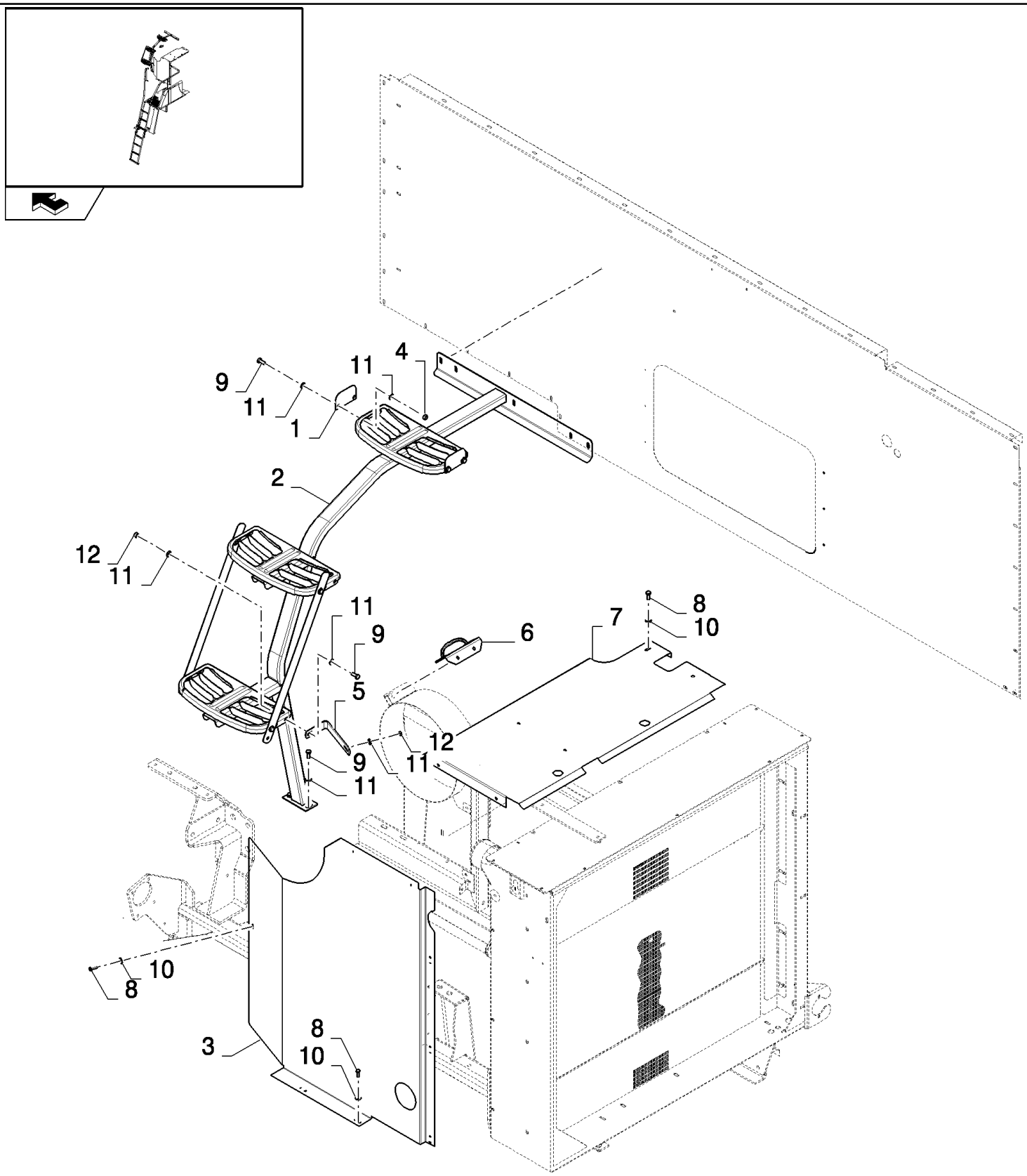

CSX7080 C659 - COMBINE (9/06-8/08)

08.209(C 01) ENGINE GUARDS AND PLATFORM LADDER - FOR LATERALE ONLY

ссылка	Номер детали	Кол-во	Описание
1	87335169	2	PLATE,
2	84460111	1	STEP,
3	84457962	1	SHIELD,
4	9706690	5	NUT, M8, Cl 8,
5	84460889	1	BRACKET,
6	87334774	1	HANDLE,
7	84458003	1	SHIELD,
8	120100	12	BOLT, Hex, M6 x 20, 8.8,
9	120104	11	SCREW, Hex, M8 x 20, 8.8,
10	412649	9	WASHER, SPRING, Belleville, M6,
11	322358	16	WASHER, SPRING, Belleville, M8,
12	9706755	1	NUT, M6, Cl 8,

08.210(B 01) ENGINE GUARDS AND PLATFORM LADDER

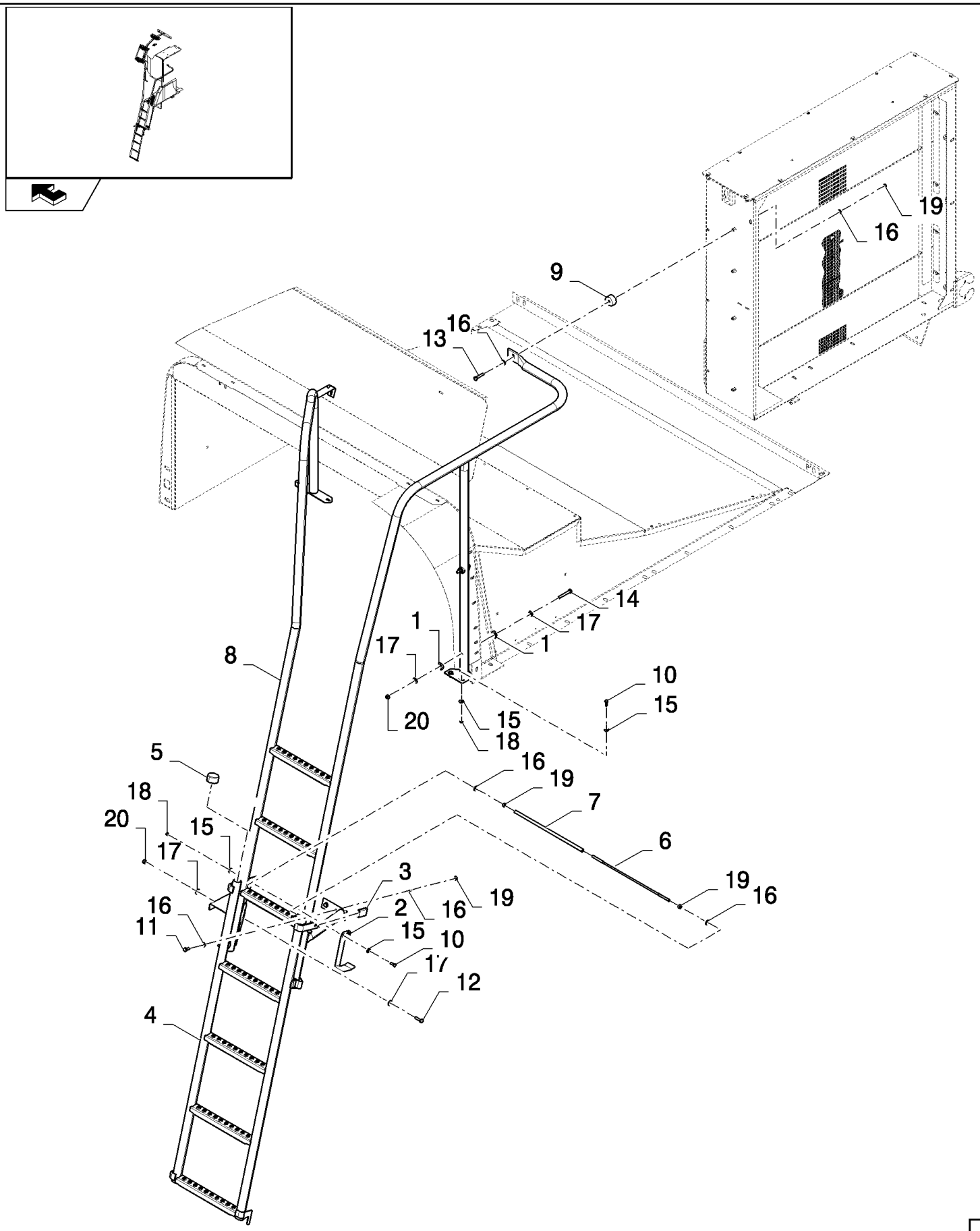

CSX7080 C659 - COMBINE (9/06-8/08)

08.210(B 01) ENGINE GUARDS AND PLATFORM LADDER

ссылка	Номер детали	Кол-во	Описание
1	333962	4	CLAMP,
2	84437965	1	BRACKET,
3	9513055	2	COVER,
4	84439295	1	LADDER,
5	84014502	2	CAP, INTRODUCTION,
6	435133	1	ROD,
7	455168	1	HOSE,
8	87344602	1	LADDER,
9	449026	1	SPACER,
10	120100	4	BOLT, Hex, M6 x 20, 8.8,
11	120104	2	SCREW, Hex, M8 x 20, 8.8,
12	43128	2	BOLT, Hex, M8 x 30, 8.8,
13	43129	1	BOLT, Hex, M8 x 40, 8.8,
14	120061	2	BOLT, Hex, M8 x 60, 8.8,
15	412649	8	WASHER, SPRING, Belleville, M6,
16	322358	10	WASHER, SPRING, Belleville, M8,
17	378243	8	WASHER, M8,
18	9706755	4	NUT, M6, Cl 8,
19	9706690	7	NUT, M8, Cl 8,
20	86629542	4	NUT, LOCK, M8 x 1.25, Cl 8,

08.210(C 01) ENGINE GUARDS AND PLATFORM LADDER - FOR LATERALE ONLY

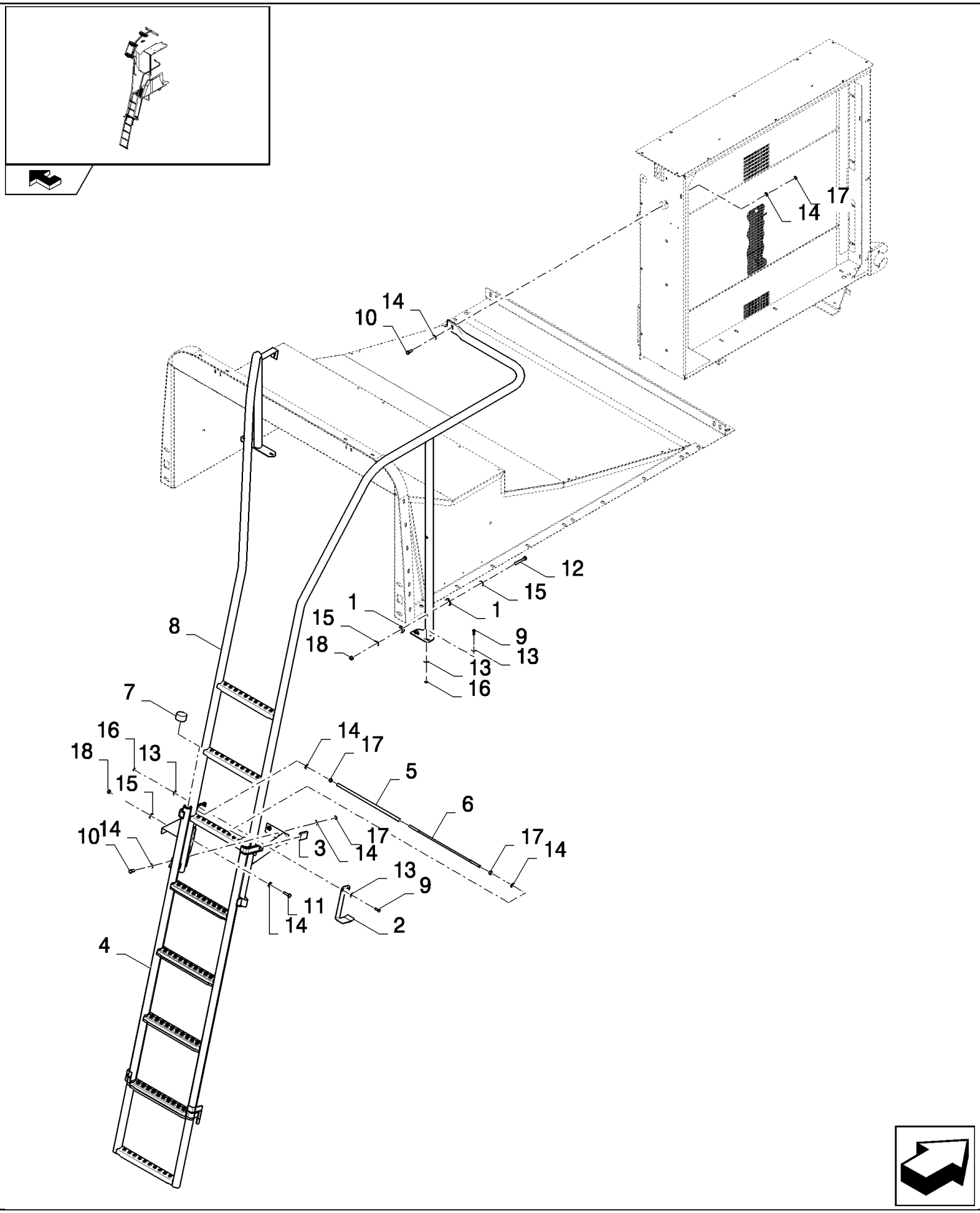

CSX7080 C659 - COMBINE (9/06-8/08)

08.210(C 01) ENGINE GUARDS AND PLATFORM LADDER - FOR LATERALE ONLY

ссылка	Номер детали	Кол-во	Описание
1	333962	4	CLAMP,
2	84437965	1	BRACKET,
3	9513055	2	COVER,
4	87690553	1	
5	455168	1	HOSE,
6	435133	1	ROD,
7	84014502	2	CAP, INTRODUCTION,
8	87329002	1	LADDER,
9	120100	4	BOLT, Hex, M6 x 20, 8.8,
10	120104	3	SCREW, Hex, M8 x 20, 8.8,
11	43128	2	BOLT, Hex, M8 x 30, 8.8,
12	120061	2	BOLT, Hex, M8 x 60, 8.8,
13	412649	8	WASHER, SPRING, Belleville, M6,
14	322358	9	WASHER, SPRING, Belleville, M8,
15	378243	8	WASHER, M8,
16	9706755	4	NUT, M6, Cl 8,
17	9706690	6	NUT, M8, Cl 8,
18	86629542	4	NUT, LOCK, M8 x 1.25, Cl 8,

08.211(01) SIGNAL PLATES

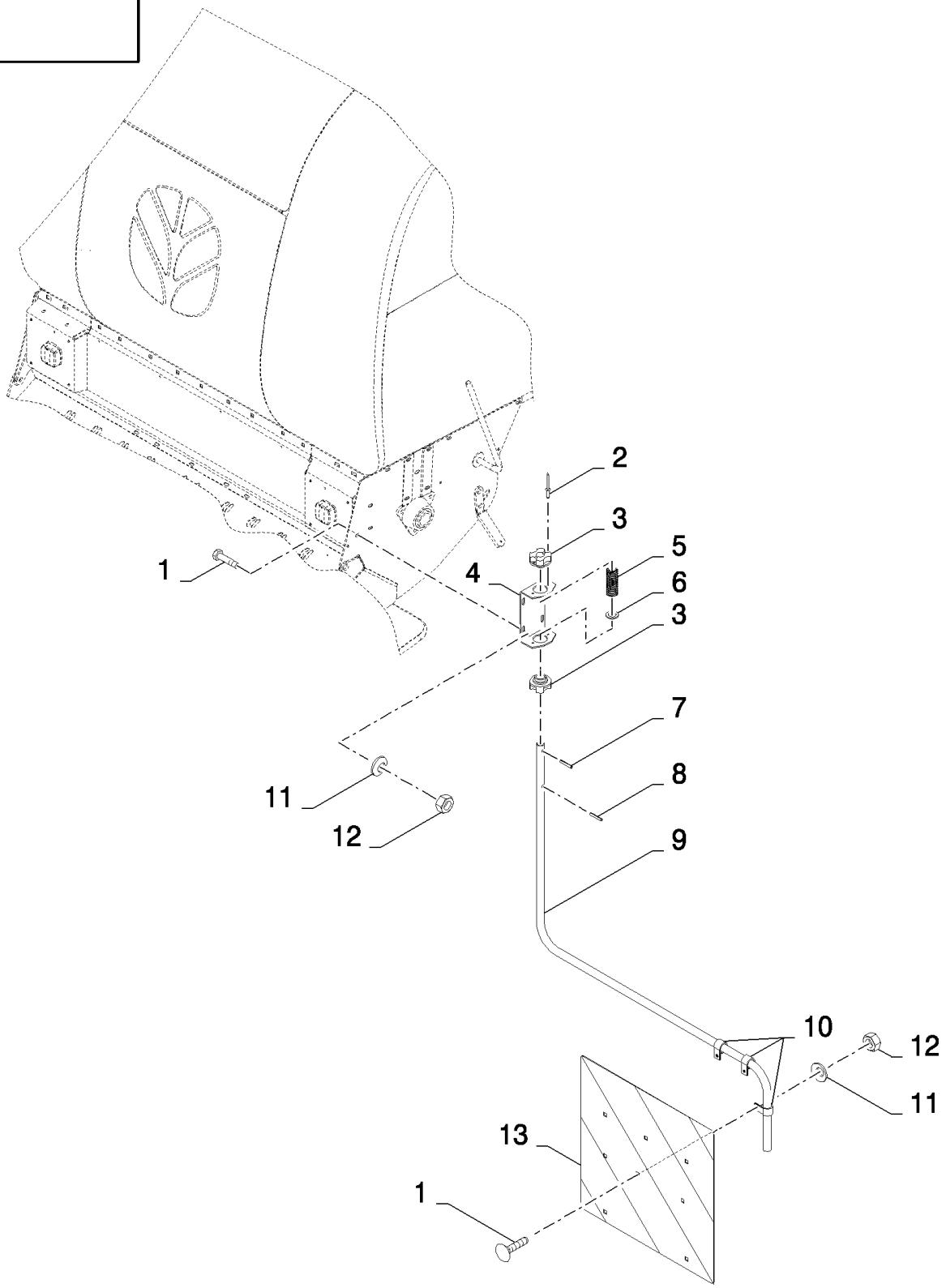

CSX7080 C659 - COMBINE (9/06-8/08)

08.211(01) SIGNAL PLATES

ссылка	Номер детали	Кол-во	Описание
1	120104	16	SCREW, Hex, M8 x 20, 8.8, , BSN C599
1	120104	12	SCREW, Hex, M8 x 20, 8.8, , ASN D600
2	455959	8	RIVET,
3	921928	4	BUSHING,
4	9814947	2	SUPPORT,
5	435967	2	SPRING,
6	378248	2	WASHER, 24MM
7	84022829	2	PIN,
8	9503523	2	PIN,
9	84447687	1	ARM, SUPPORTING, RH
9	84447654	1	ARM, SUPPORTING, LH
10	418407	6	CLAMP,
11	322358	14	WASHER, SPRING, Belleville, M8,
12	9706690	14	NUT, M8, Cl 8,
13	84607381	2	PLATE,

08.211(A 01) SIGNAL PLATES - FOR ITALY

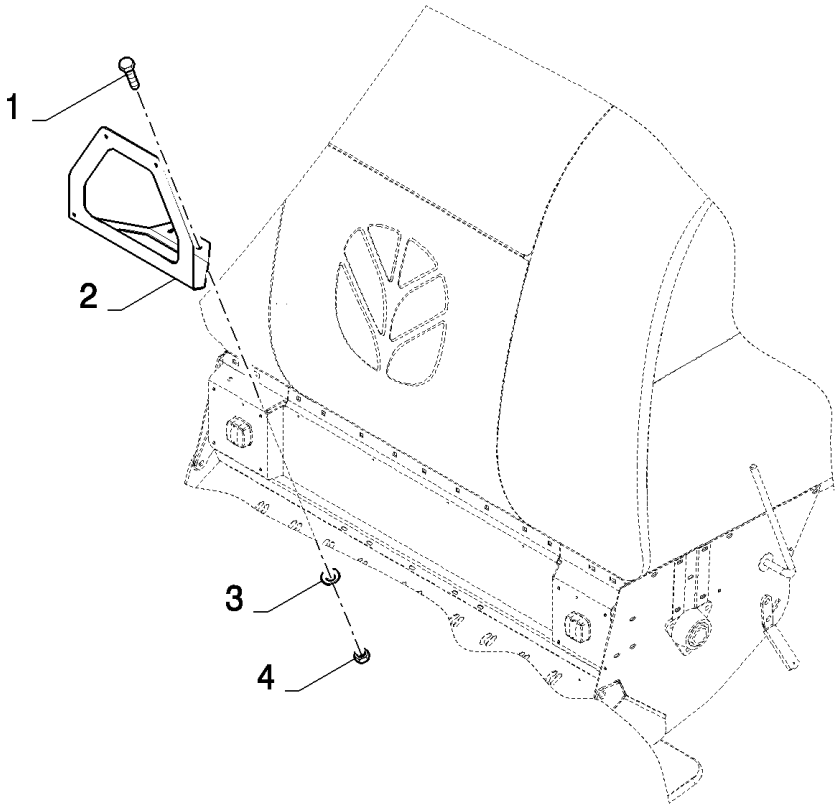

CSX7080 C659 - COMBINE (9/06-8/08)

08.211(A 01) SIGNAL PLATES - FOR ITALY

ссылка	Номер детали	Кол-во	Описание
1	120104	2	SCREW, Hex, M8 x 20, 8.8,
2	84447708	1	SUPPORT,
3	322358	2	WASHER, SPRING, Belleville, M8,
4	9706690	2	NUT, M8, Cl 8,

08.212(A 01) STRAW HOOD, CANVAS

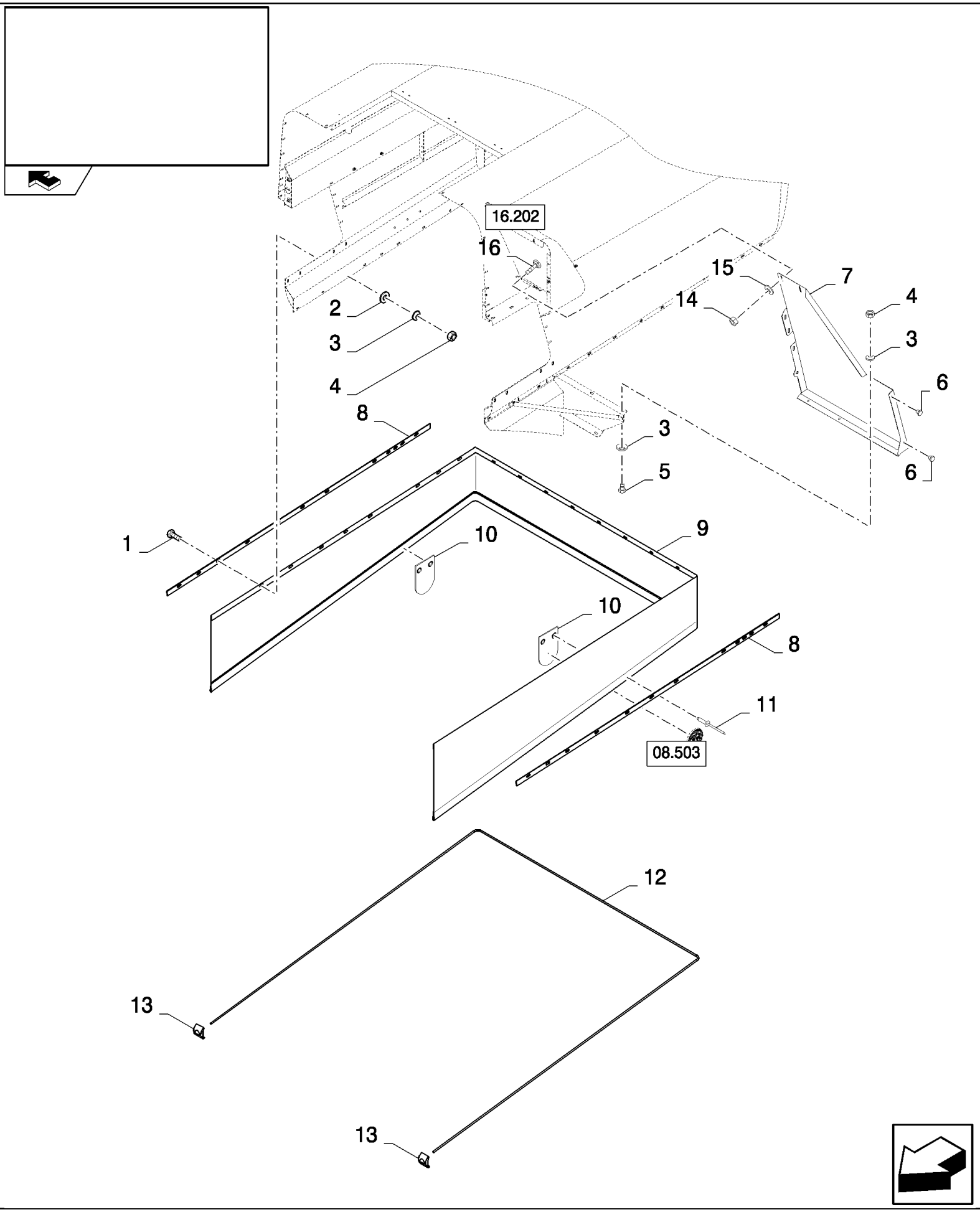

CSX7080 C659 - COMBINE (9/06-8/08)

08.212(A 01) STRAW HOOD, CANVAS

ссылка	Номер детали	Кол-во	Описание
1	308761	29	BOLT, CARRIAGE, Short NK, M8 x 25, Cl8.8, Full Thd,
2	140041	29	WASHER, M8 x 28 x 3,
3	412650	35	WASHER, Belleville, M8,
4	9706690	32	NUT, M8, Cl 8,
5	43127	3	BOLT, Hex, M8 x 25, 8.8,
6	331233	2	PLUG,
7	87386053	1	SHIELD,
8	84434614	2	PLATE, FIXING,
9	84434754	1	CANVAS,
10	84446659	2	PLATE,
11	9512968	4	RIVET,
12	84434755	1	ROD,
13	432067	2	CIRCLIP,

08.215(01) FAN SHIELDING LHS

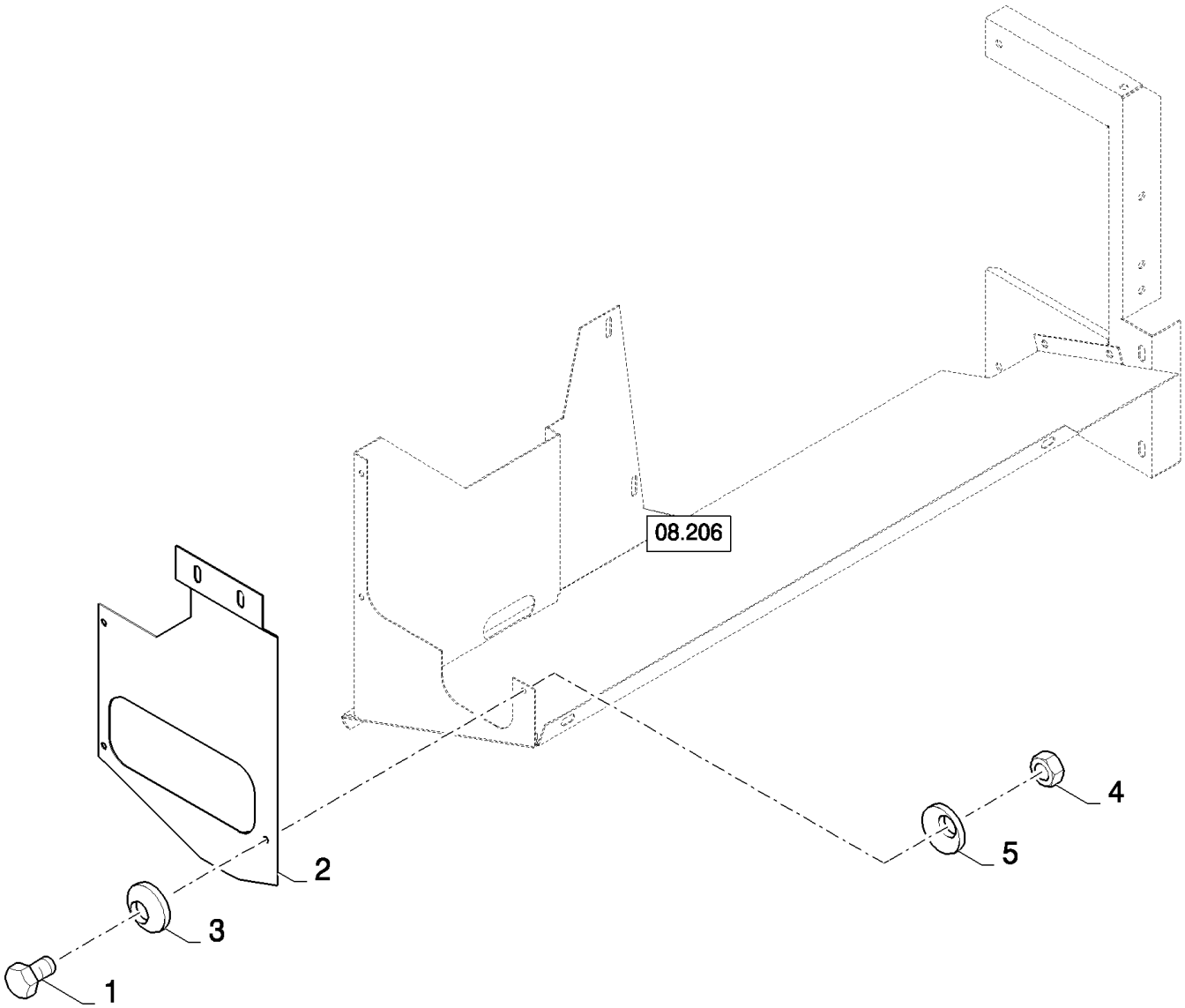

CSX7080 C659 - COMBINE (9/06-8/08)

08.215(01) FAN SHIELDING LHS

ссылка	Номер детали	Кол-во	Описание
1	86508568	3	SCREW, Hex, M6 x 16, 8.8,
2	87527283	1	PLATE, , FOR 20KM/H DRIVES ONLY
2	87527285	1	PLATE, , FOR STANDARD AND MUDDY DRIVES ONLY
3	322357	6	WASHER, SPRING, Belleville, M6,
4	9706755	3	NUT, M6, Cl 8,

08.216(A 01) DEFLECTOR

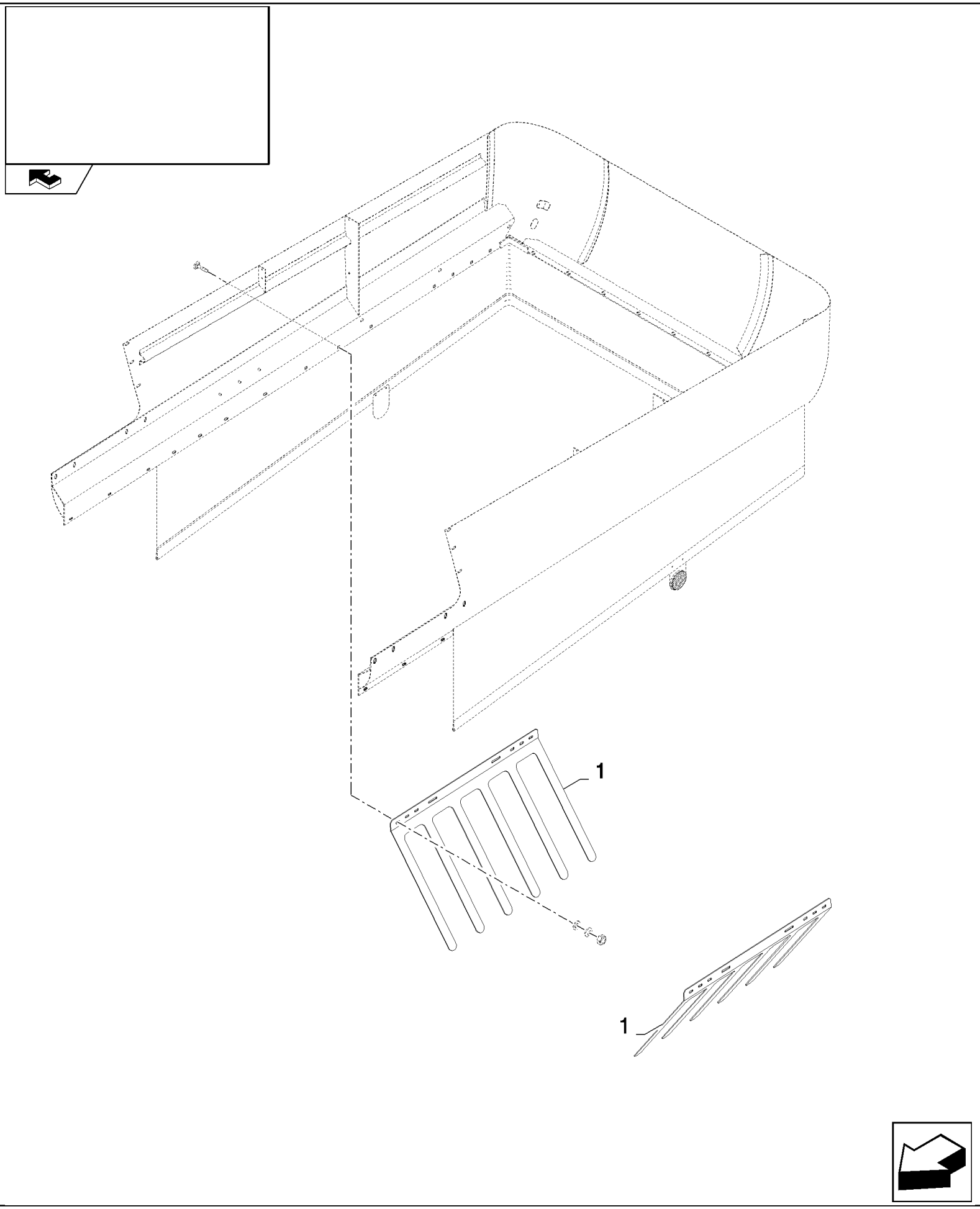

CSX7080 C659 - COMBINE (9/06-8/08)

08.216(A 01) DEFLECTOR

ссылка	Номер детали	Кол-во	Описание
1	84448617	2	RAKE,

08.217(B 01) ENGINE GUARDS

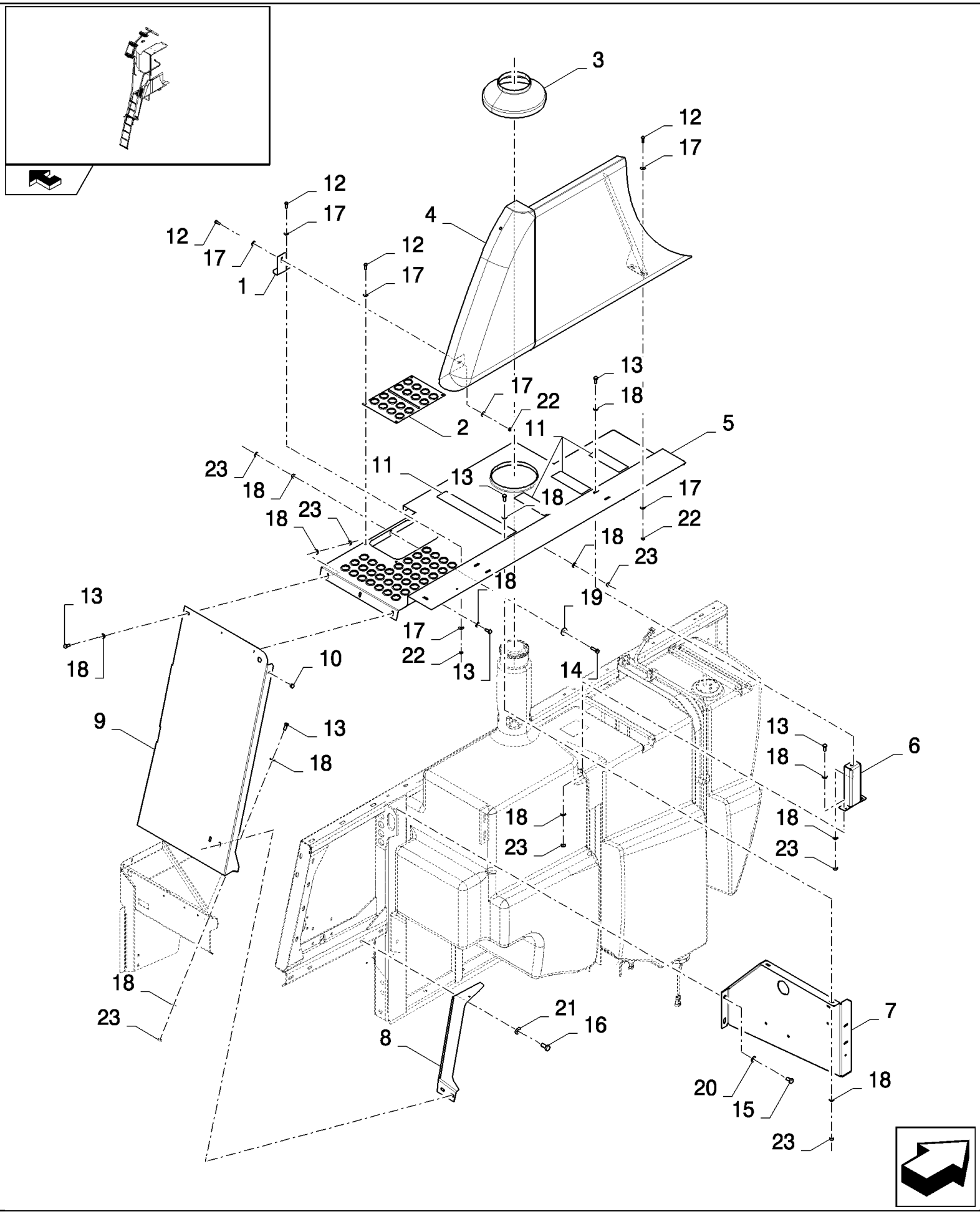

CSX7080 C659 - COMBINE (9/06-8/08)

08.217(B 01) ENGINE GUARDS

ссылка	Номер детали	Кол-во	Описание
1	84434025	1	BRACKET,
2	84439293	1	PLATE,
3	9501343	1	SEAL PROTECTION,
4	87345358	1	SHIELD,
5	87341425	1	PLATFORM,
6	84437884	1	SUPPORT,
7	87343758	1	SUPPORT,
8	87344607	1	SUPPORT,
9	87345942	1	PLATE,
10	331233	2	PLUG,
11	401502	AR	STRIP, ANTI-SKID, L=0.81M
12	120100	8	BOLT, Hex, M6 x 20, 8.8,
13	120104	10	SCREW, Hex, M8 x 20, 8.8,
14	43128	1	BOLT, Hex, M8 x 30, 8.8,
15	43138	2	SCREW, Hex, M10 x 20, 8.8, Full Thd,
16	300388	2	SCREW, Hex, M12 x 25, 8.8,
17	412649	12	WASHER, SPRING, Belleville, M6,
18	322358	22	WASHER, SPRING, Belleville, M8,
19	140041	1	WASHER, M8 x 28 x 3,
20	140045	2	WASHER, SPRING, Belleville, M10,
21	140046	2	WASHER, Belleville, M12,
22	9706755	4	NUT, M6, Cl 8,
23	9706690	12	NUT, M8, Cl 8,

08.501(01) SAFETY AND INSTRUCTION DECALS

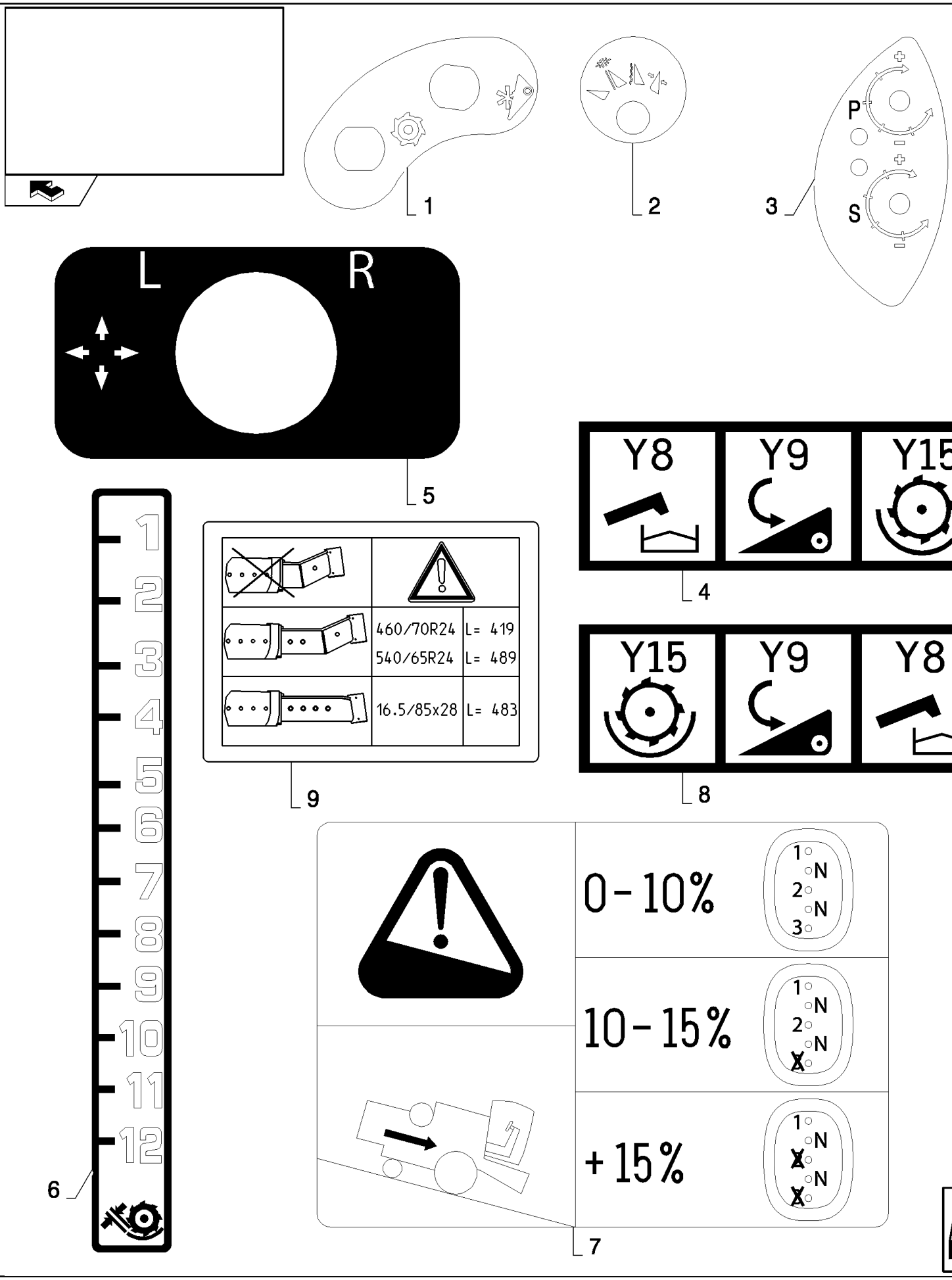

CSX7080 C659 - COMBINE (9/06-8/08)

08.501(01) SAFETY AND INSTRUCTION DECALS

ссылка	Номер детали	Кол-во	Описание
1	84433266	1	DECAL,
2	84433274	1	DECAL,
3	84433276	1	DECAL,
4	84441614	1	DECAL,
5	84807993	1	DECAL,
6	84434593	1	DECAL,
7	84441879	1	DECAL,
8	84453565	1	DECAL,
9	87319717	2	DECAL,

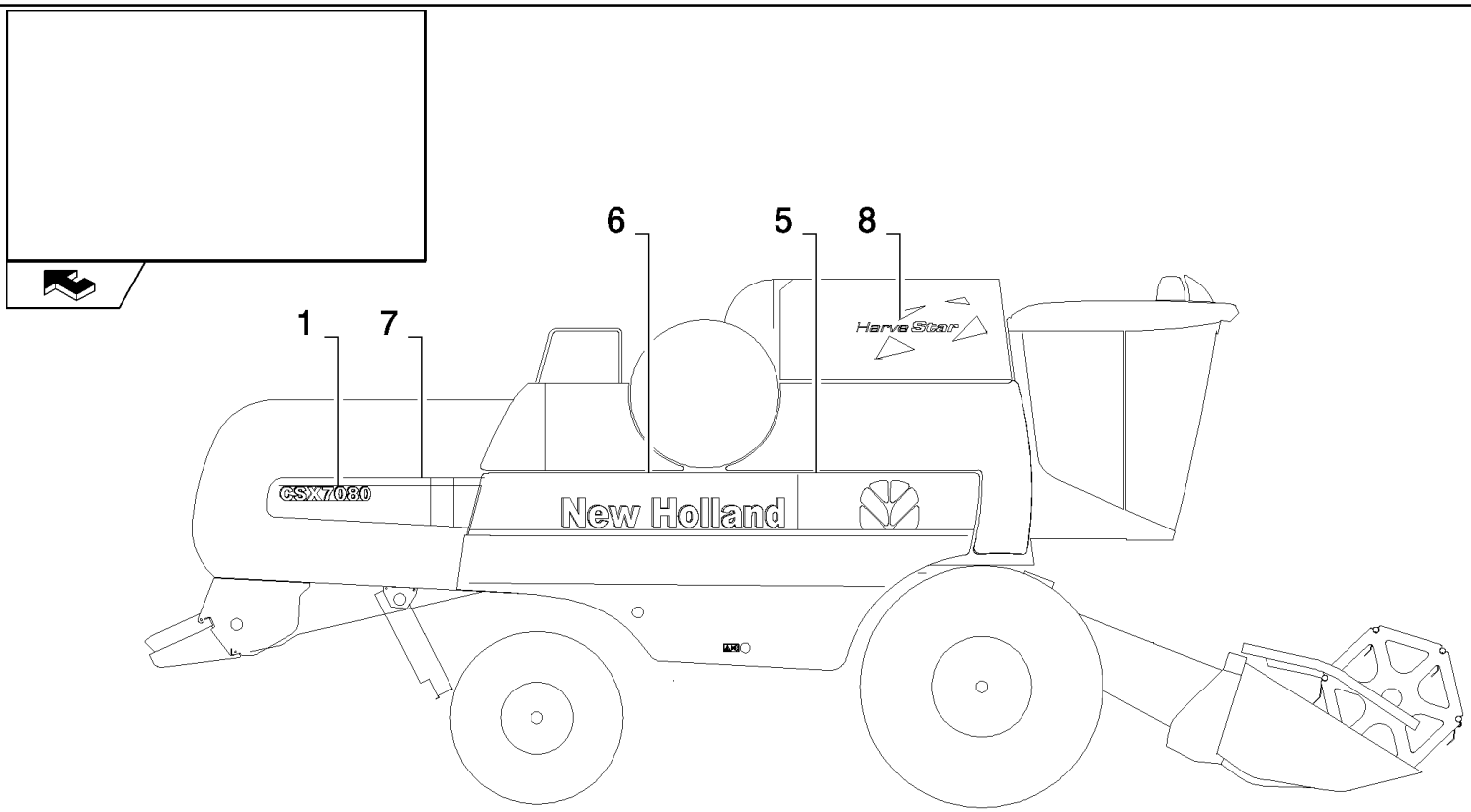
6
5
8
1
7
Harvestar
CSX7080
New Holland

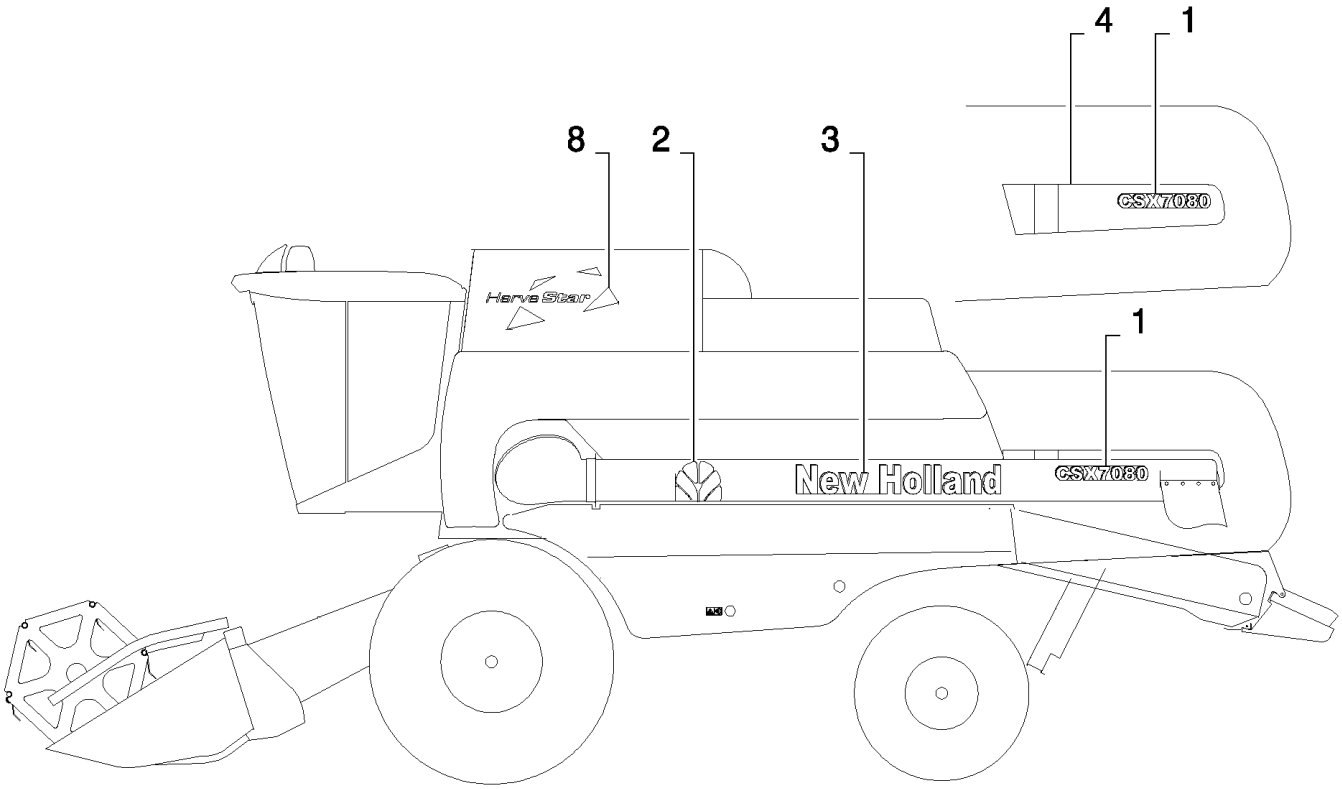
4
1
8
2
3
CSX7080
Harvestar
1
New Holland
CSX7080

CSX7080 C659 - COMBINE (9/06-8/08)

08.502(A 01) COMMERCIAL DECALS - C599

ссылка	Номер детали	Кол-во	Описание
1	87537472	3	DECAL, , FOR CSX7060 ONLY
1	87537473	3	DECAL, , FOR CSX7080 ONLY
2	87387930	1	DECAL,
3	87389898	1	DECAL,
4	87387926	1	DECAL,
5	87387925	1	DECAL,
6	87387924	1	DECAL,
7	87387920	1	DECAL,
8	87537471	2	DECAL,

08.502(B 01) COMMERCIAL DECALS

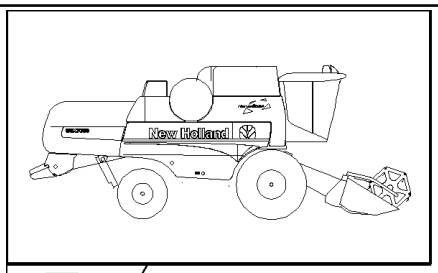

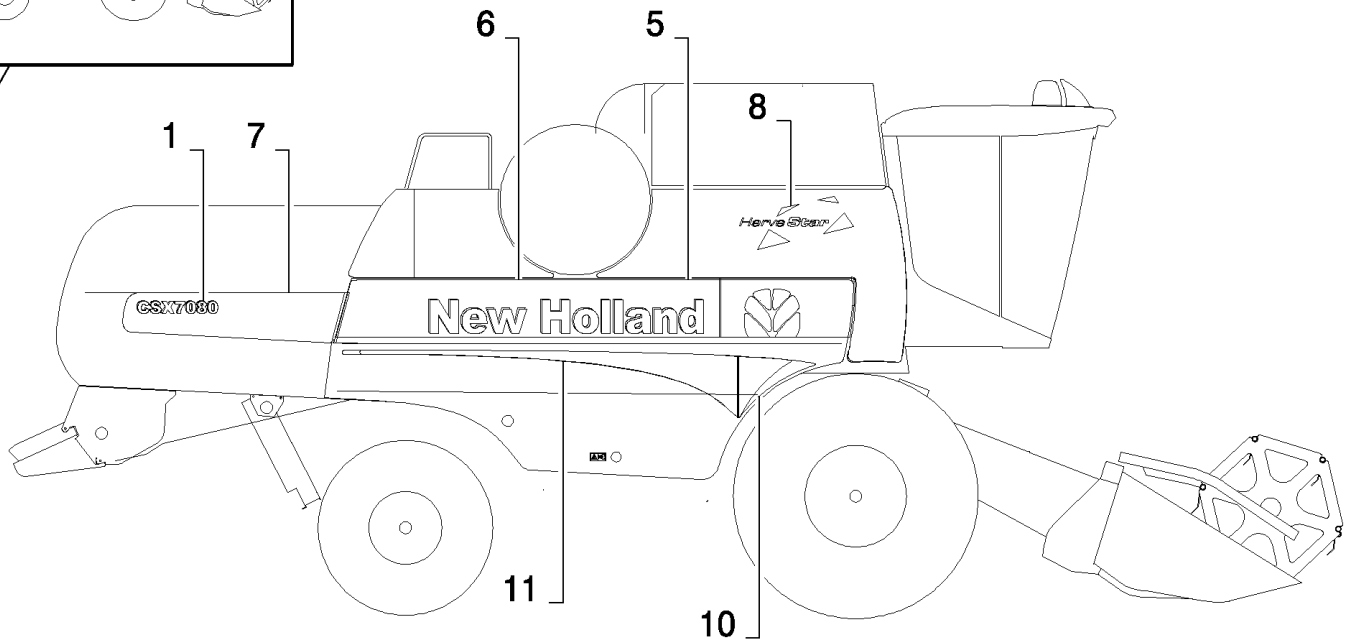

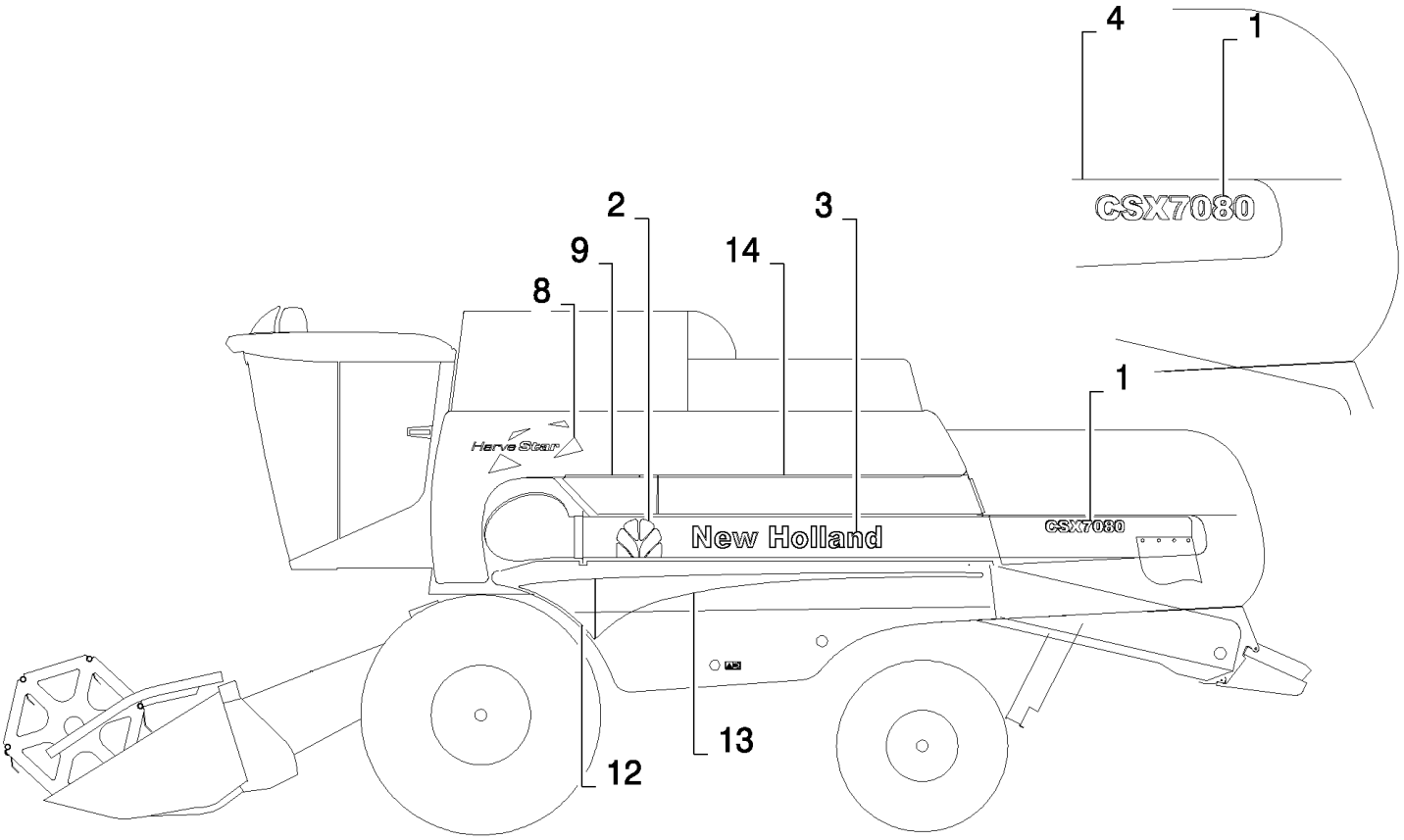

CSX7080 C659 - COMBINE (9/06-8/08)

08.502(B 01) COMMERCIAL DECALS

ссылка	Номер детали	Кол-во	Описание
1	87668502	3	DECAL, , FOR CSX7060 ONLY
1	87668503	3	DECAL, , FOR CSX7080 ONLY
2	87387930	1	DECAL,
3	87638803	1	DECAL,
4	87668495	1	DECAL,
5	87668508	1	DECAL,
6	87668492	1	DECAL,
7	87668494	1	DECAL,
8	87668507	2	DECAL,
9	87681326	1	DECAL,
10	87668505	1	DECAL,
11	87681324	1	DECAL,
12	87668504	1	DECAL,
13	87681325	1	DECAL,
14	87668494	1	DECAL,

08.502(C 01) COMMERCIAL DECALS - FOR LATERALE ONLY

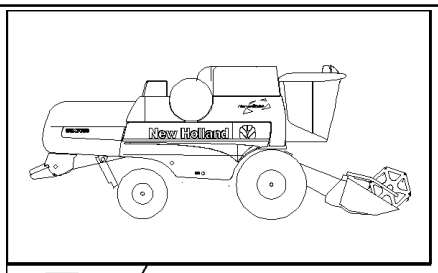

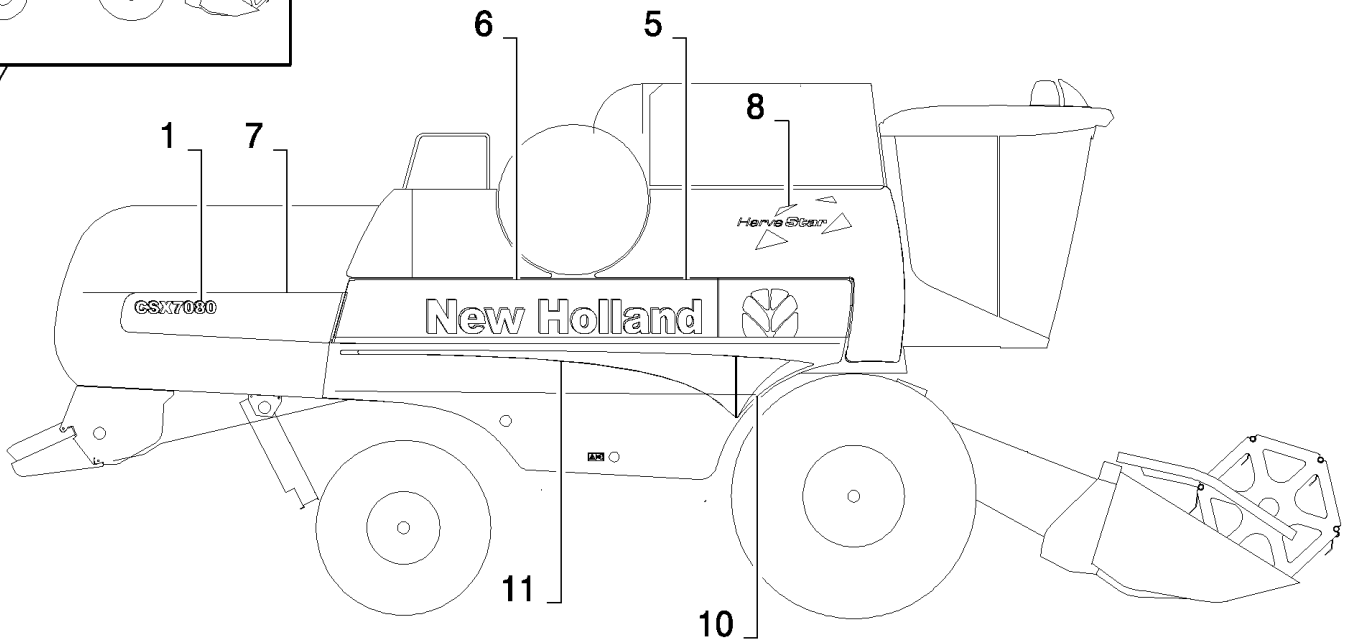

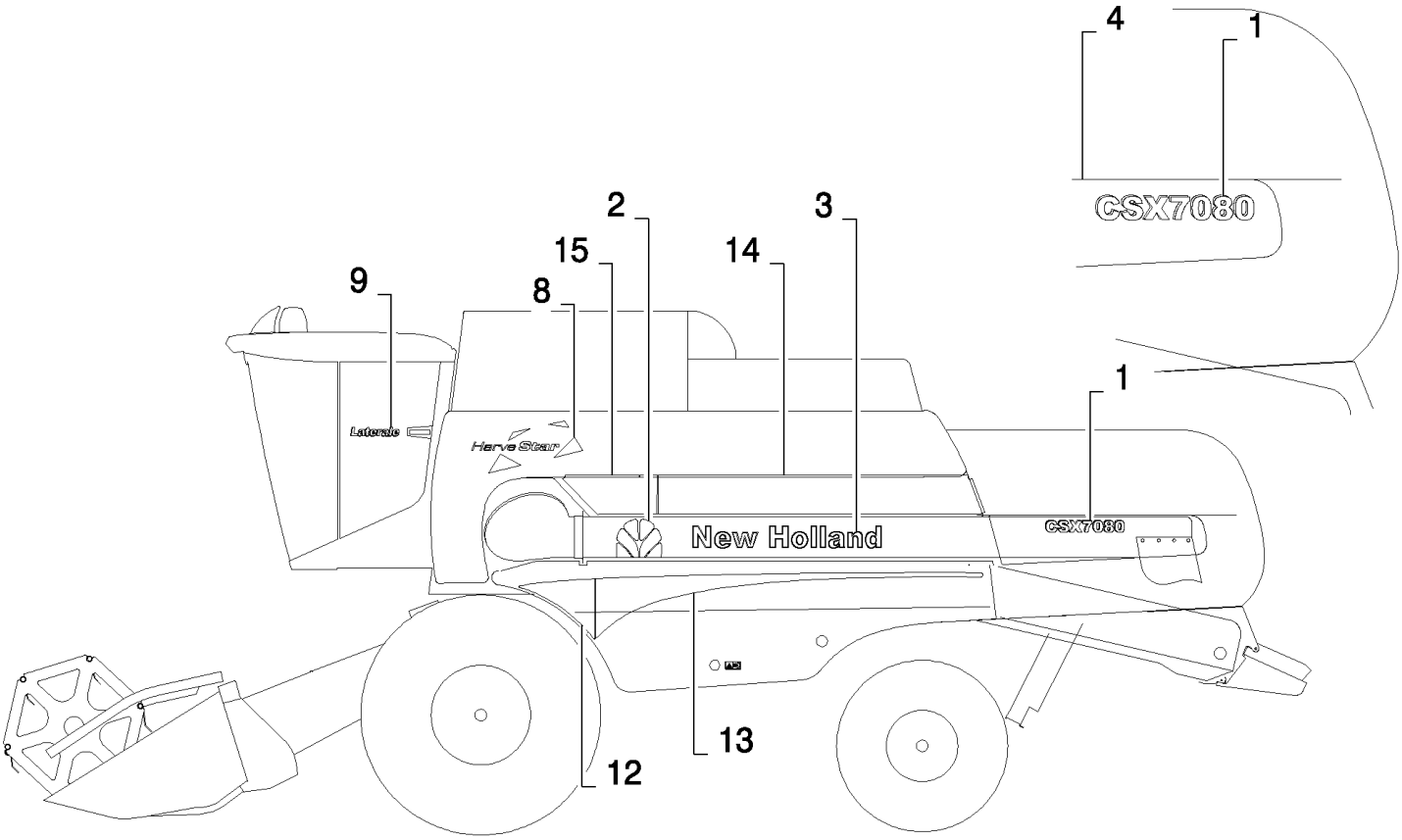

CSX7080 C659 - COMBINE (9/06-8/08)

08.502(C 01) COMMERCIAL DECALS - FOR LATERALE ONLY

ссылка	Номер детали	Кол-во	Описание
1	87668502	3	DECAL, , FOR CSX7060 ONLY
1	87668503	3	DECAL, , FOR CSX7080 ONLY
2	87387930	1	DECAL,
3	87638803	1	DECAL,
4	87668495	1	DECAL,
5	87668508	1	DECAL,
6	87668492	1	DECAL,
7	87668494	1	DECAL,
8	87668507	2	DECAL,
9	87668501	1	DECAL,
10	87681322	1	DECAL,
11	87681323	1	DECAL,
12	87681320	1	DECAL,
13	87681321	1	DECAL,
14	87668493	1	DECAL,
15	87681326	1	DECAL,

08.503(01) SAFETY AND INSTRUCTION DECALS

CSX7080 C659 - COMBINE (9/06-8/08)

08.503(01) SAFETY AND INSTRUCTION DECALS

ссылка	Номер детали	Кол-во	Описание
1	84432862	1	DECAL, , BSN C543
1	87396791	1	DECAL, , ASN D544
2	425961	AR	DECAL, , FOR GERMANY ONLY, BSN C547
2	87393649	AR	DECAL, , FOR GERMANY ONLY, ASN D548
3	84989464	AR	DECAL,
4	84334829	AR	DECAL,
5	84334828	AR	DECAL,
6	437024	2	REFLECTOR, RED
6	435895	6	REFLECTOR, YELLOW
6	437024	3	REFLECTOR, RED, FOR GERMANY ONLY, FOR HUNGARY ONLY
6	84447967	2	REFLECTOR,
7	449973	AR	DECAL,
8	9513272	1	DECAL, , FOR GERMANY ONLY
9	84072701	1	DECAL,
10	84449793	1	DECAL,
11	84432904	1	DECAL,
12	84433130	AR	DECAL,
13	84989141	AR	DECAL,
13	84429339	AR	DECAL, , FOR RUSSIA ONLY
14	84989135	AR	DECAL,
14	84058950	AR	DECAL, , FOR RUSSIA ONLY
15	84462829	AR	DECAL,
16	87559263	1	DECAL, , ASN D544
17	87617960	1	DECAL,
18	87729650	1	DECAL, , ASN D616
19	87719606	1	DECAL, , ASN D616

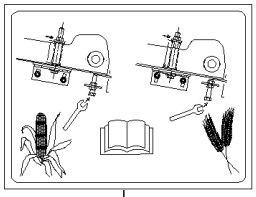

16

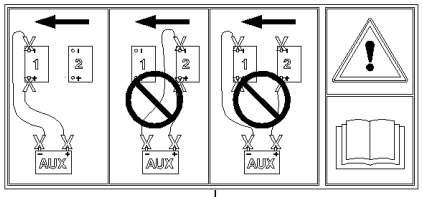

17

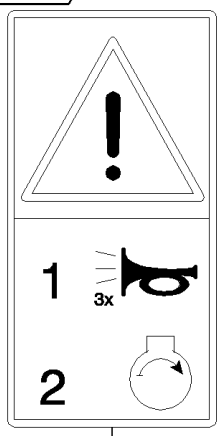

1

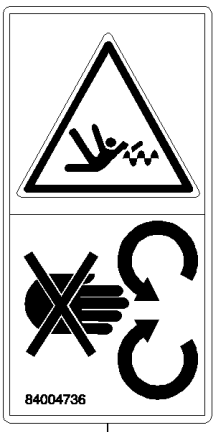

2

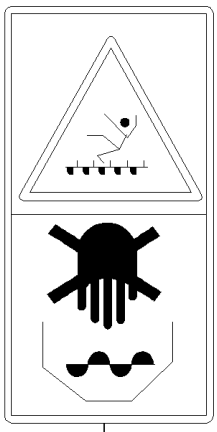

3

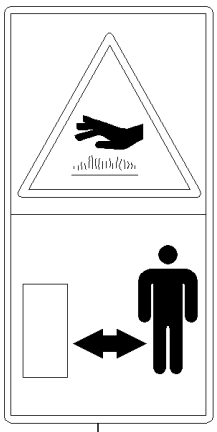

4

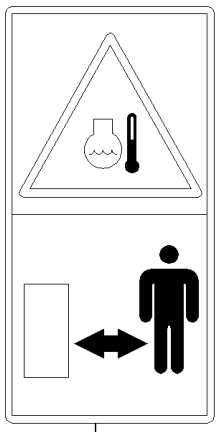

5

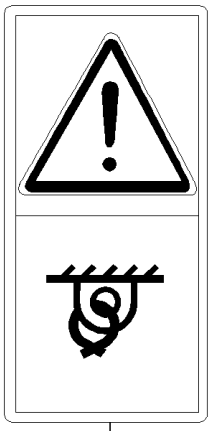

6

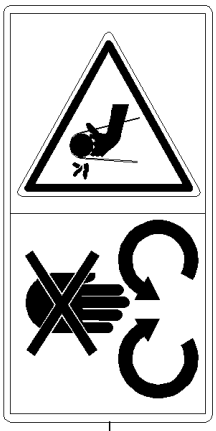

7

8

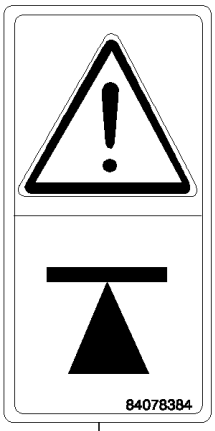

9

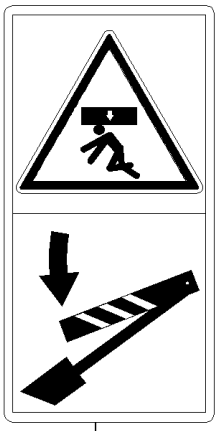

10

Background transparent

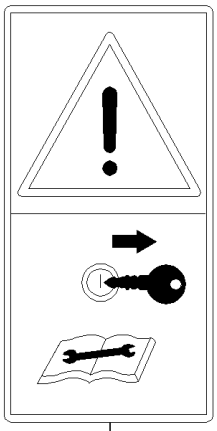

11

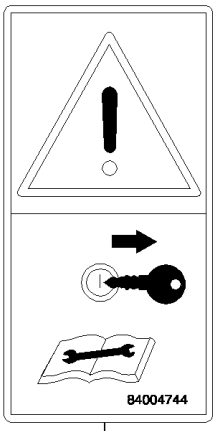

12

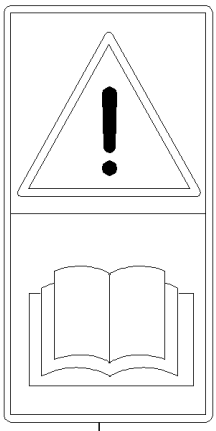

13

14

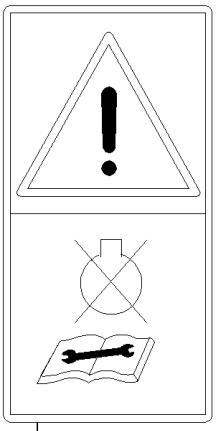

15

CSX7080 C659 - COMBINE (9/06-8/08)

08.504(01) SAFETY AND INSTRUCTION DECALS

ссылка	Номер детали	Кол-во	Описание
1	84012892	1	DECAL, , BSN C543
2	84004736	1	DECAL,
3	84004740	2	DECAL,
4	84004742	1	DECAL,
5	84432981	1	DECAL,
6	84100296	2	DECAL,
7	84004734	AR	DECAL,
8	84004743	1	DECAL,
9	84078384	2	DECAL,
10	84004735	AR	DECAL,
11	84012893	1	DECAL,
12	84004744	2	DECAL,
13	84004731	AR	DECAL,
14	84004732	1	DECAL,
15	84004733	AR	DECAL,
16	84981908	AR	DECAL,
17	87717605	AR	WARNING SIGN, , ASN D616

08.505(01) SAFETY AND INSTRUCTION DECALS

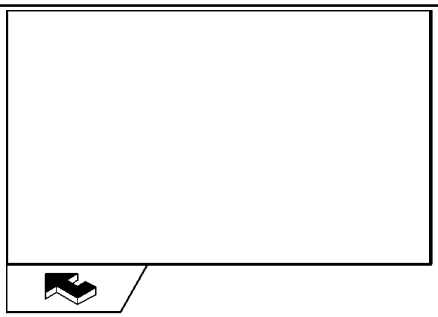

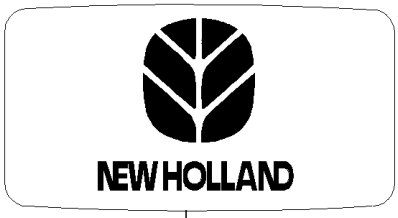

1

2

7

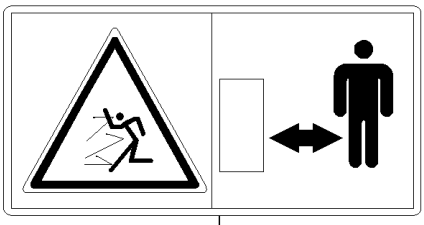

13

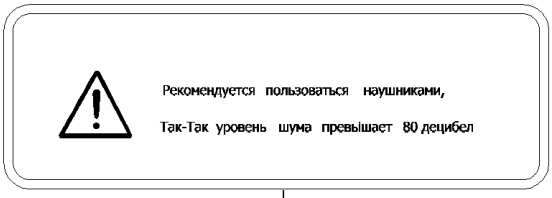

14

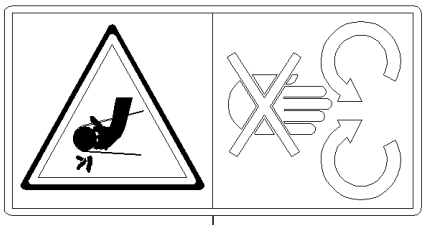

3

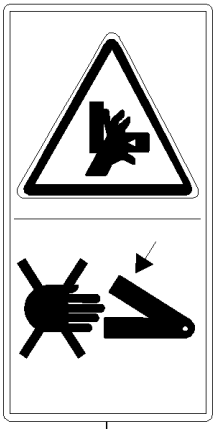

16

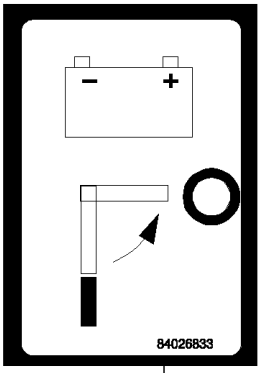

4

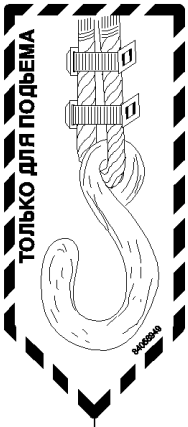

5

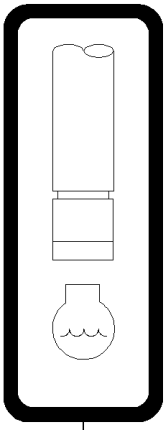

6

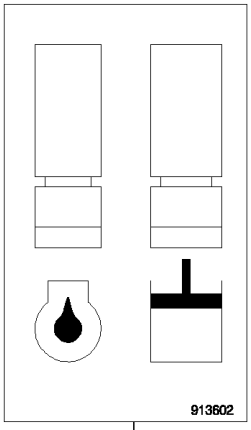

15

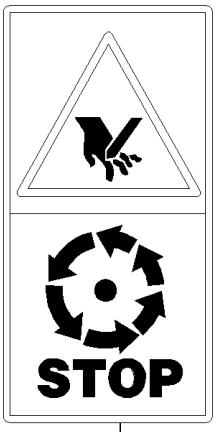

8

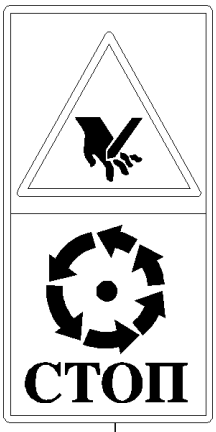

9

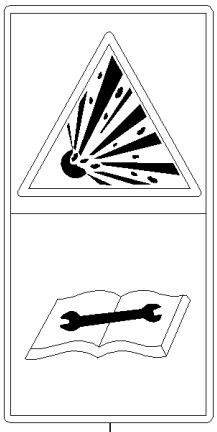

10

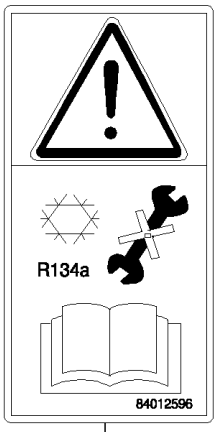

11

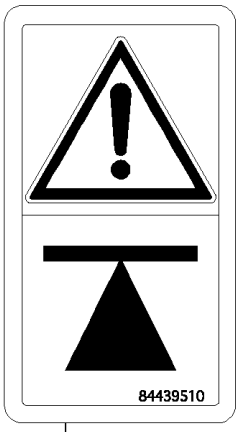

12

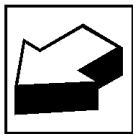

CSX7080 C659 - COMBINE (9/06-8/08)

08.505(01) SAFETY AND INSTRUCTION DECALS

ссылка	Номер детали	Кол-во	Описание
1	87802965	1	EMBLEM,
2	82031728	6	DECAL, Branding
3	84011345	2	DECAL,
4	84026833	1	DECAL,
5	84058949	5	DECAL, , FOR RUSSIA ONLY
6	84433021	1	DECAL,
7	84072135	1	DECAL, , FOR RUSSIA ONLY
8	84014117	7	DECAL,
9	84062737	7	DECAL, , FOR RUSSIA ONLY
10	84005363	1	DECAL,
11	84012596	1	DECAL,
12	84439510	AR	DECAL,
13	84004739	1	DECAL,
14	84429052	1	DECAL, , FOR RUSSIA ONLY
15	913602	1	DECAL,
16	84011346	1	DECAL,

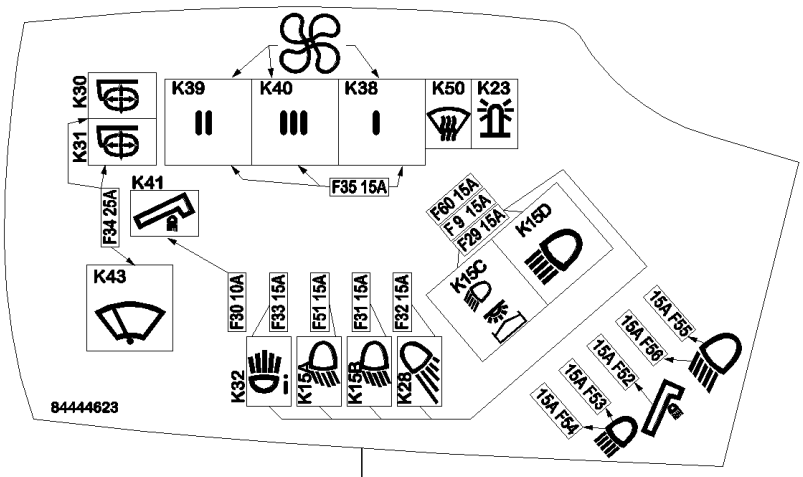
K30
K31
K39
K40
K38
K50
K23
K41
F35 15A
F34 25A
K43
F60 15A
F 9 15A
F29 15A
K15D
K15C
F30 10A
F33 15A
F51 15A
F31 15A
F32 15A
15A F55
15A F56
15A F52
15A F53
15A F54
K32
K15A
K15B
K28
84444623

1

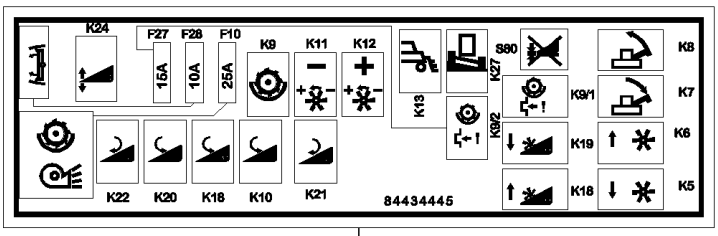
K24
F27
F28
F10
15A
10A
25A
K9
K11
K12
K13
K27
S60
K9/1
K9/2
K19
K18
K8
K7
K6
K5
K22
K20
K18
K10
K21
84434445

2

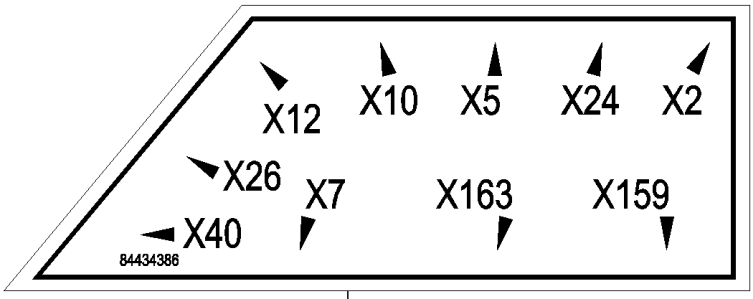
X12
X10
X5
X24
X2
X26
X7
X163
X159
X40
84434386

4

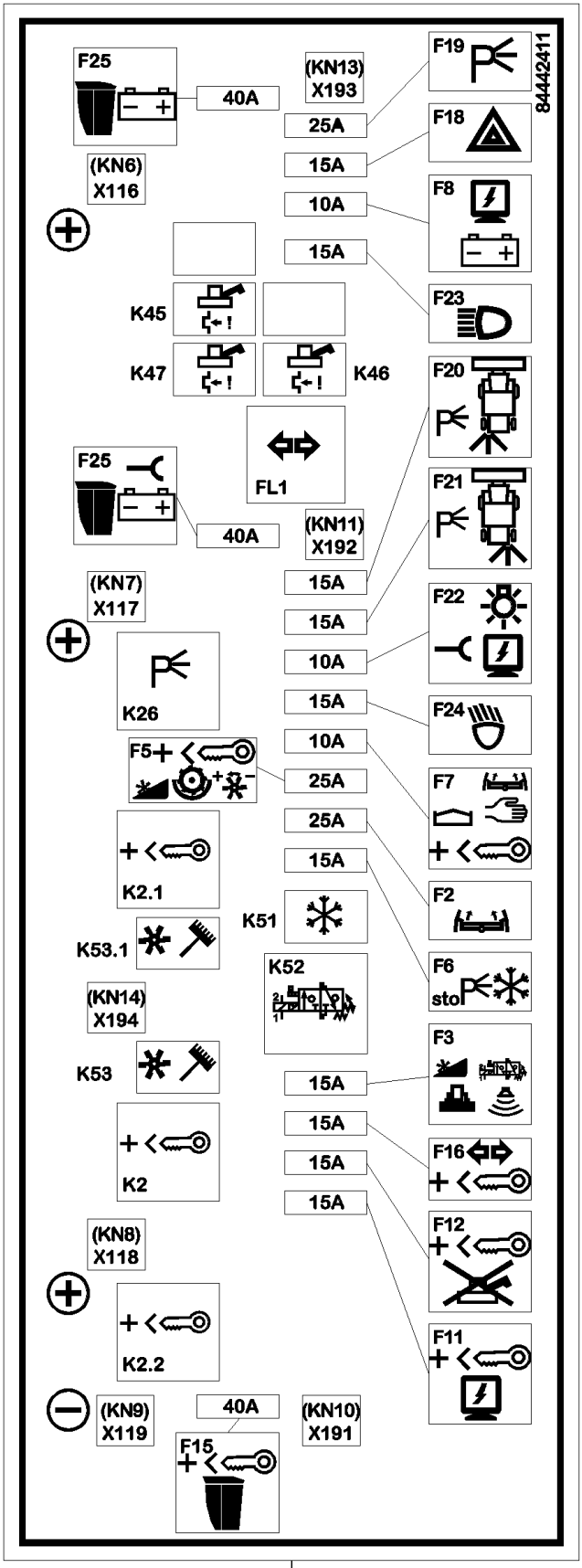
84442411
F25
40A
(KN6)
X116
(KN13)
X193
25A
15A
10A
15A
F19
F18
F8
F23
K45
K47
K46
F20
F25
FL1
40A
(KN11)
X192
F21
(KN7)
X117
15A
15A
10A
15A
10A
25A
25A
15A
F22
F24
K26
F5
K2.1
K51
K53.1
K52
F7
F2
F6
sto
(KN14)
X194
K53
15A
15A
15A
15A
F3
F16
K2
F12
(KN8)
X118
K2.2
F11
(KN9)
X119
40A
F15
(KN10)
X191

3

CSX7080 C659 - COMBINE (9/06-8/08)

08.506(01) DECALS : PRINTED CIRCUIT

ссылка	Номер детали	Кол-во	Описание
1	87352860	1	DECAL,
2	87391063	1	DECAL,
3	87394098	1	DECAL,
4	84434386	1	DECAL,

CAB	**CABINE**	**CABINA**	**CAB**
CABINA	**KABINE**	**CABINA**	**CABINE**

SEC. 10

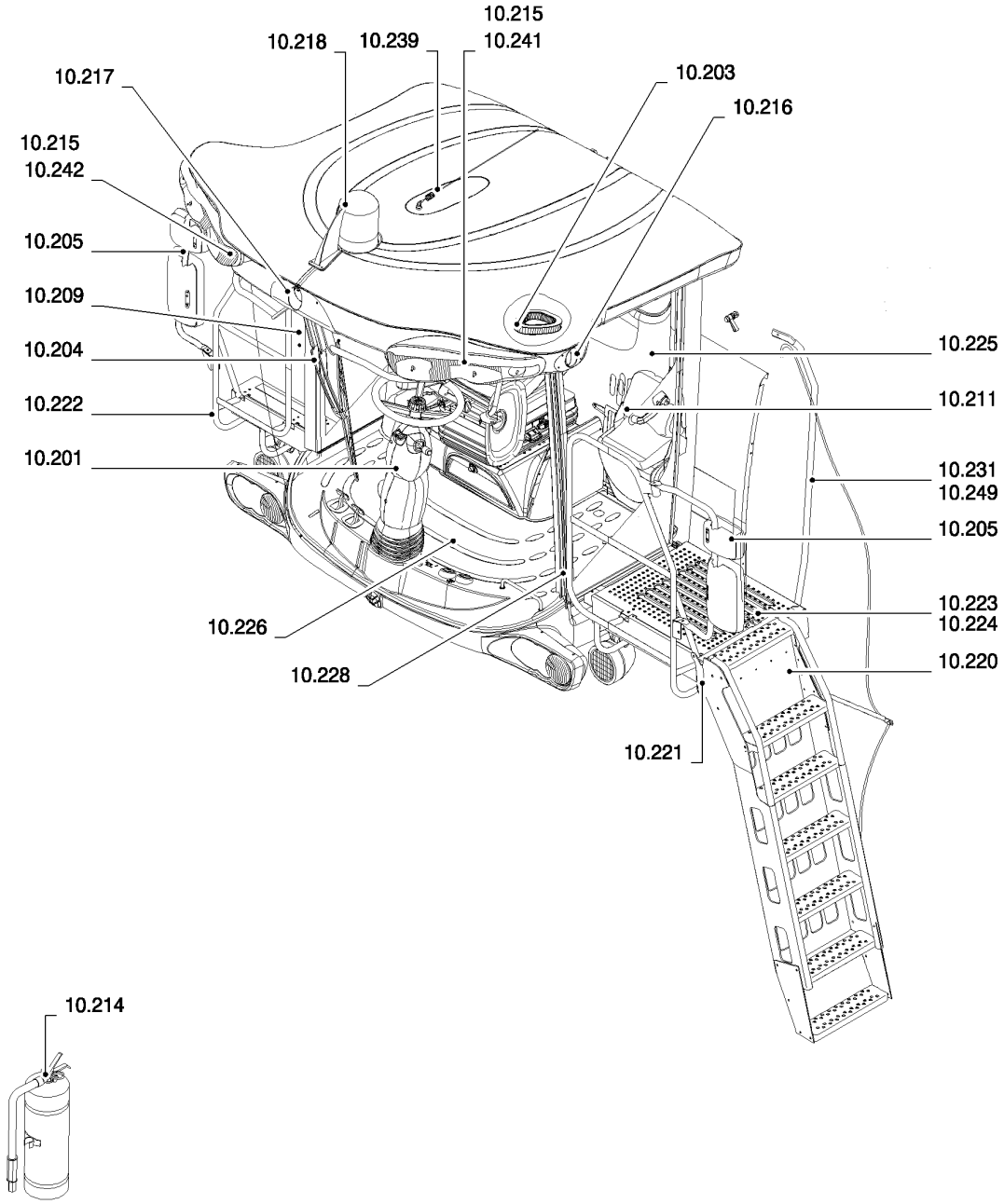

ссылка	Номер детали	Кол-во	Описание

CAB	**CABINE**	**CABINA**	**CAB**
CABINA	**KABINE**	**CABINA**	**CABINE**

SEC. 10

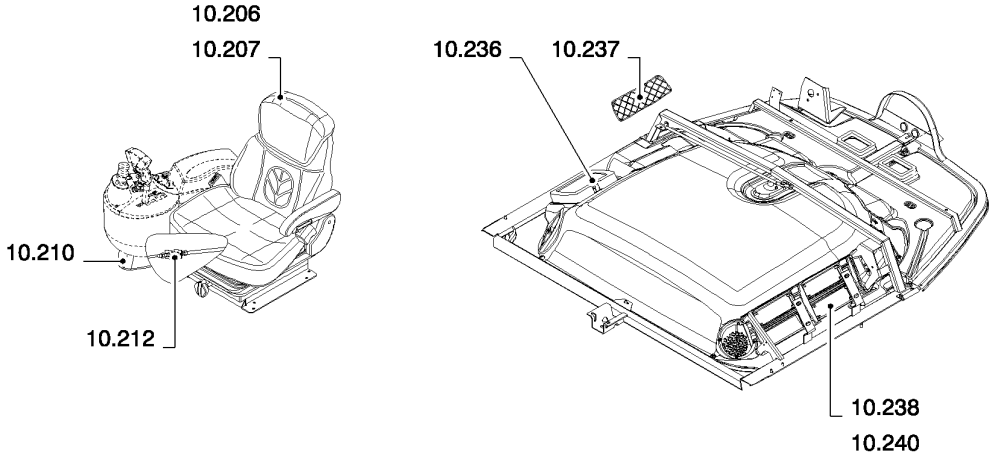

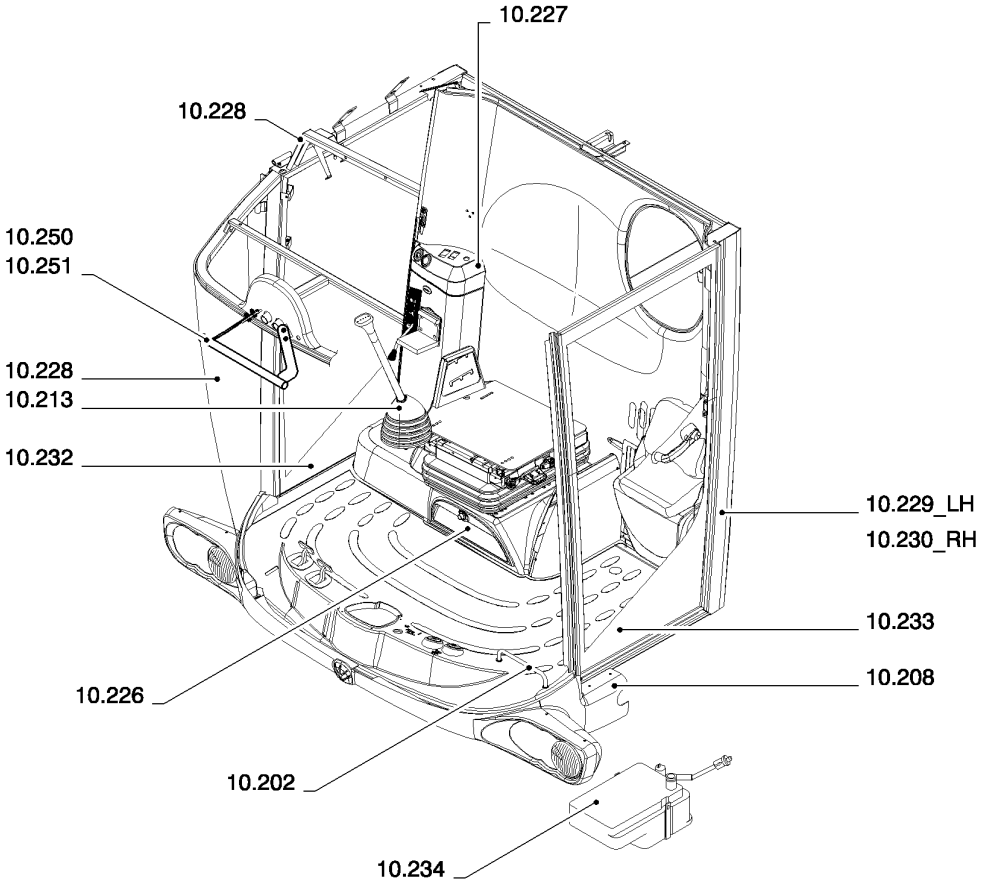

ссылка	Номер детали	Кол-во	Описание

CAB	**CABINE**	**CABINA**	**CAB**
CABINA	**KABINE**	**CABINA**	**CABINE**

SEC. 10

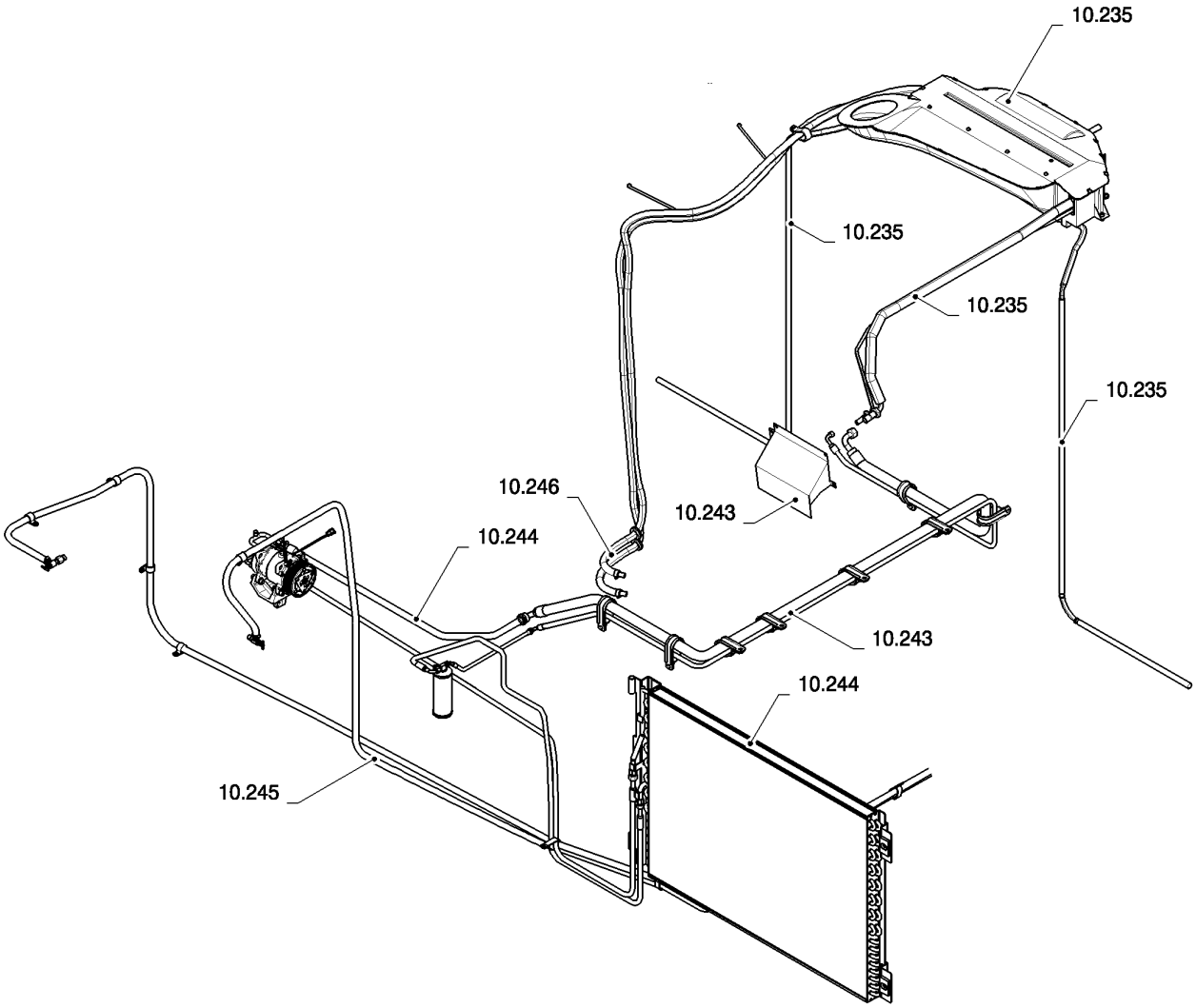

ссылка	Номер детали	Кол-во	Описание

10.201(01) STEERING COLUMN

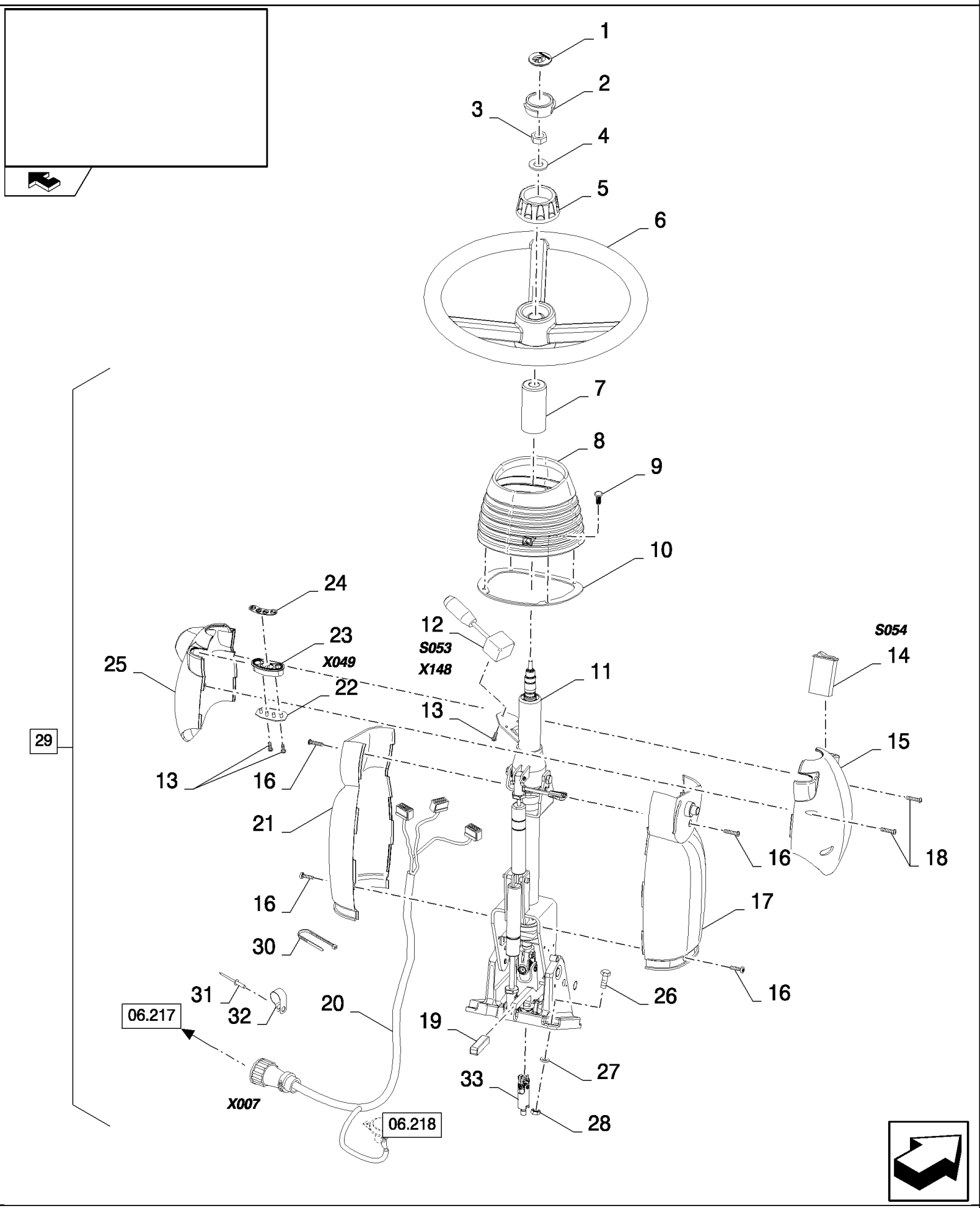

CSX7080 C659 - COMBINE (9/06-8/08)

10.201(01) STEERING COLUMN

ссылка	Номер детали	Кол-во	Описание
1	86504532	1	EMBLEM,
2	86504533	1	COVER,
3	86511416	1	NUT, Jam, 5/8"-18, G2,
4	140048	1	WASHER, SPRING, Belleville, M16,
5	84320688	1	KNOB,
6	84320687	1	STEERING WHEEL,
7	84607196	1	BUSHING,
8	84320421	1	BELLOWS,
9	87343499	7	PIN, CLEVIS,
10	84431852	1	PLATE, FIXING,
11	84800929	1	STEERING COLUMN, , NO SUBPARTS YET AVAILABLE
12	84014920	1	SWITCH ASSY, , DIRECTION SWITCH
13	280154	5	SCREW, SELF TAPPING, Cross Rd Hd, #6 x 1/2",
14	84817392	1	SWITCH, FLASHER, HAZARD LIGHTS, HAZARD SWITCH
15	84320431	1	COVER,
16	86511829	4	SCREW, Cross Pan Hd, M6 x 16,
17	84320420	1	COVER,
18	412475	2	SCREW, M4x16
19	84807930	1	
20	84437176	1	HARNESS, WIRE, , SEE FIGURE 06.517
21	84320419	1	COVER,
22	84400068	1	BOARD, PRINTED CIRCUIT,
23	84400987	1	BEZEL,
24	84432573	1	DECAL,
25	84320430	1	COVER,
26	43128	4	BOLT, Hex, M8 x 30, 8.8,
27	322358	4	WASHER, SPRING, Belleville, M8,
28	9706690	4	NUT, M8, Cl 8,
29	84100360	1	STEERING COLUMN, (7,8,10 to 25)
30	89993154	2	CLAMP,
31	9512290	2	RIVET,
32	84818444	2	CLAMP,
33	84800898	1	SHAFT,

10.202(01) FEET SUPPORT

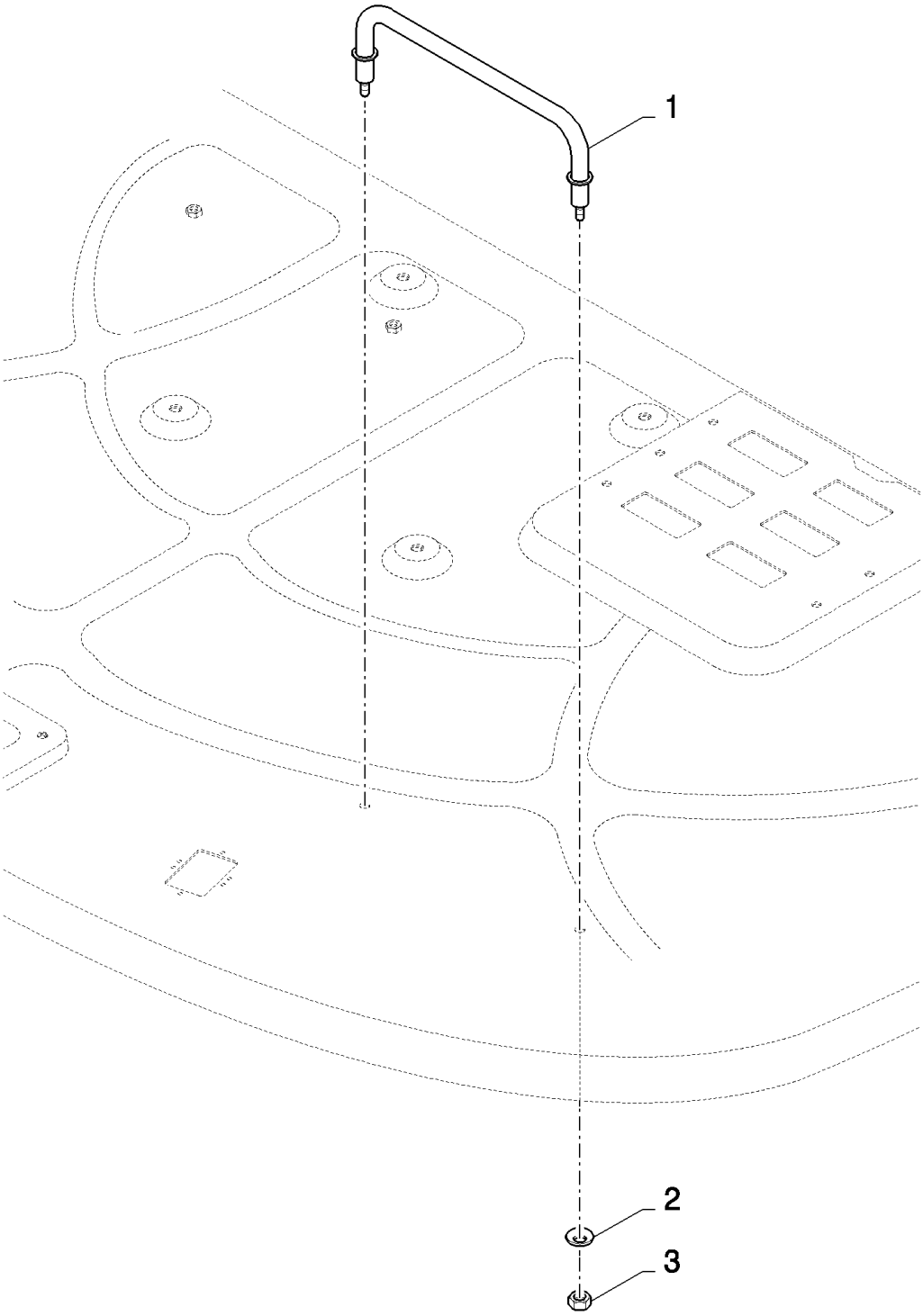

CSX7080 C659 - COMBINE (9/06-8/08)

10.202(01) FEET SUPPORT

ссылка	Номер детали	Кол-во	Описание
1	84014562	1	SUPPORT,
2	322358	2	WASHER, SPRING, Belleville, M8,
3	9706690	2	NUT, M8, Cl 8,

10.203(01) CAB ROOF, AIR FILTER - C582

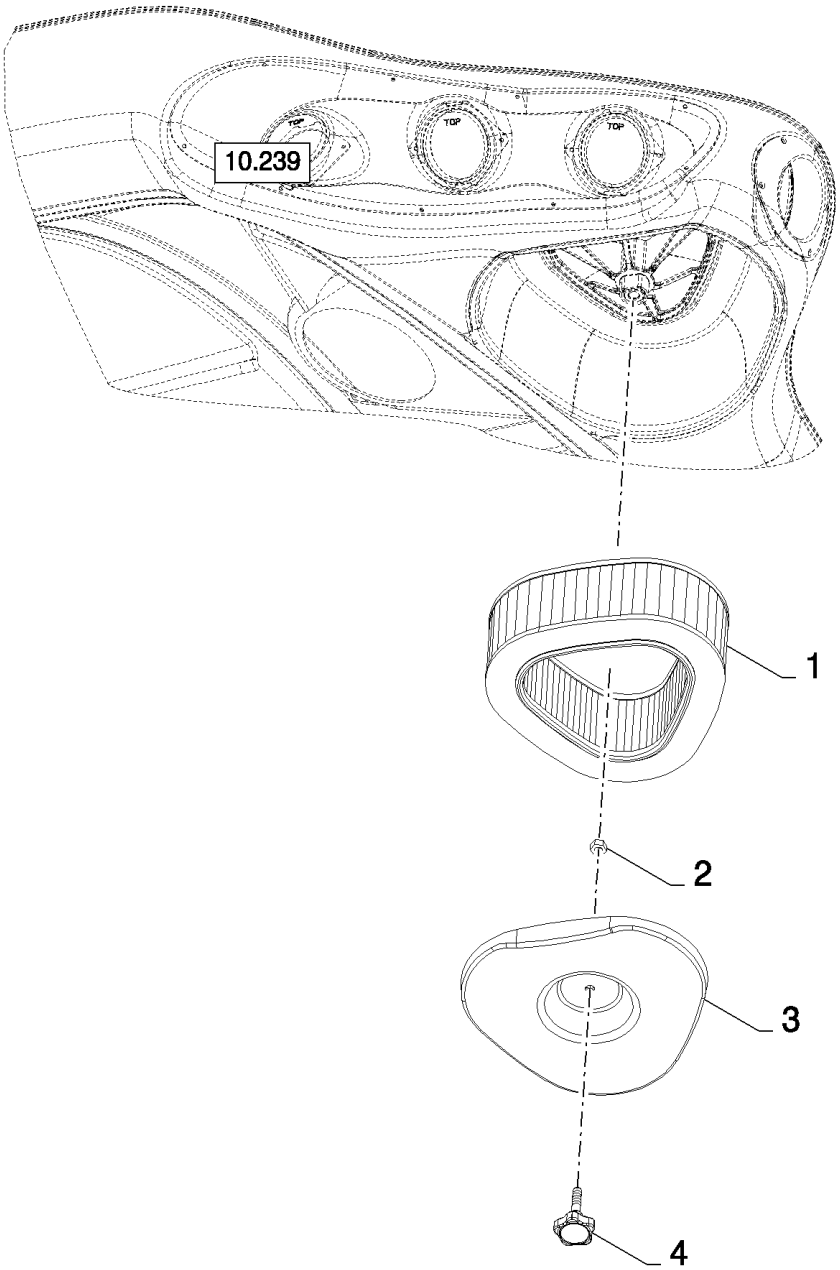

CSX7080 C659 - COMBINE (9/06-8/08)

10.203(01) CAB ROOF, AIR FILTER - C582

ссылка	Номер детали	Кол-во	Описание
1	84807659	1	FILTER, CAB,
2	756970	1	NUT,
3	84814123	1	COVER,
4	84814124	1	KNOB,

10.203(A 01) CAB ROOF, AIR FILTER - D583

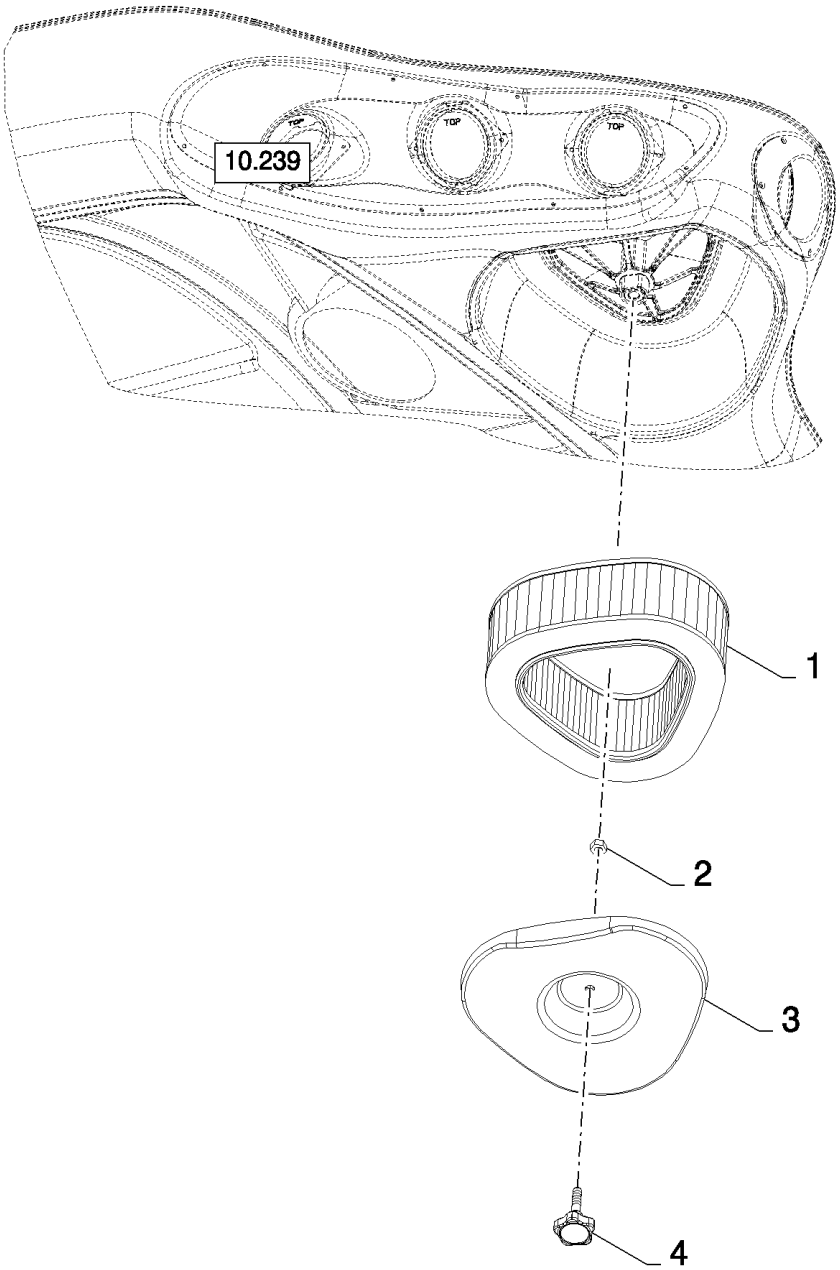

CSX7080 C659 - COMBINE (9/06-8/08)

10.203(A 01) CAB ROOF, AIR FILTER - D583

ссылка	Номер детали	Кол-во	Описание
1	87588490	1	
2	756970	1	NUT,
3	84814123	1	COVER,
4	84814124	1	KNOB,

10.204(01) WINDSCREEN WIPER

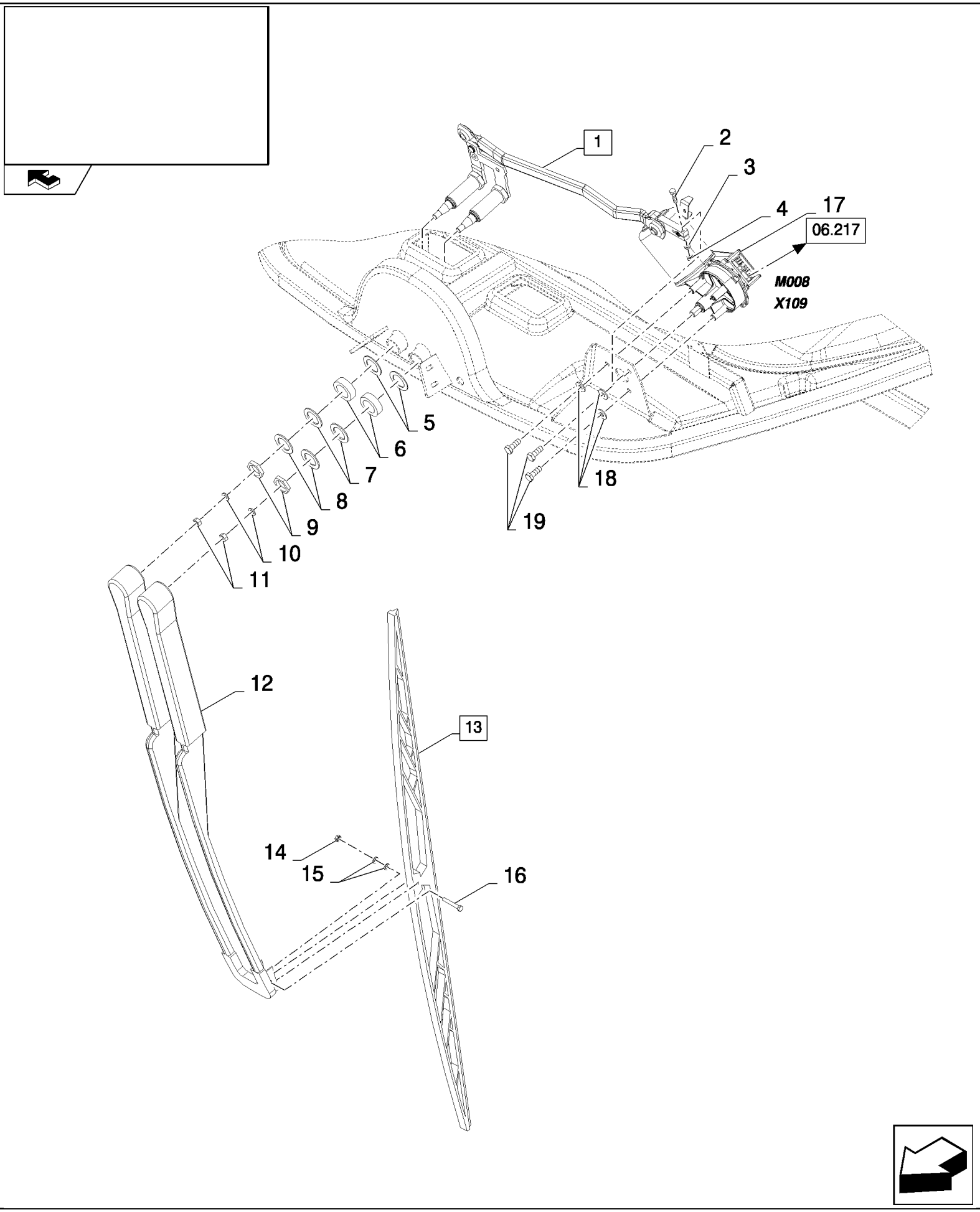

CSX7080 C659 - COMBINE (9/06-8/08)

10.204(01) WINDSCREEN WIPER

ссылка	Номер детали	Кол-во	Описание
1	84100260	1	WIPER ARM, (2 to 11)
2	NSS	1	NOT SERVICED SEPARATELY,
3	NSS	1	NOT SERVICED SEPARATELY,
4	NSS	1	NOT SERVICED SEPARATELY,
5	NSS	2	NOT SERVICED SEPARATELY,
6	NSS	2	NOT SERVICED SEPARATELY,
7	NSS	2	NOT SERVICED SEPARATELY,
8	NSS	2	NOT SERVICED SEPARATELY,
9	NSS	2	NOT SERVICED SEPARATELY,
10	NSS	2	NOT SERVICED SEPARATELY,
11	NSS	2	NOT SERVICED SEPARATELY, M8
12	86542153	1	WIPER ARM,
13	84007417	1	WIPER BLADE, (14 to 16)
14	NSS	1	NOT SERVICED SEPARATELY,
15	NSS	2	NOT SERVICED SEPARATELY,
16	NSS	1	NOT SERVICED SEPARATELY,
17	84431950	1	WIPER MOTOR,
18	322357	3	WASHER, SPRING, Belleville, M6,
19	86508568	3	SCREW, Hex, M6 x 16, 8.8,

10.205(A 01) REAR VIEW MIRROR - FOR GERMANY

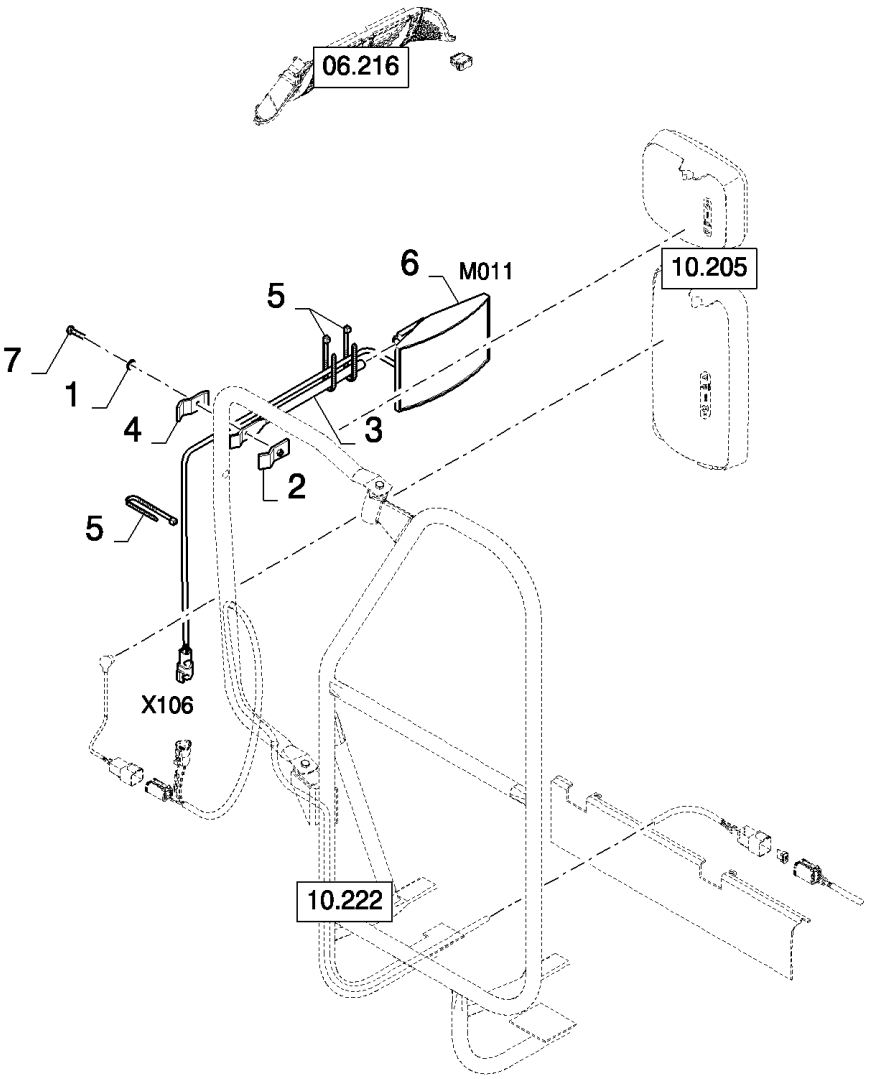

CSX7080 C659 - COMBINE (9/06-8/08)

10.205(A 01) REAR VIEW MIRROR - FOR GERMANY

ссылка	Номер детали	Кол-во	Описание
1	322357	1	WASHER, SPRING, Belleville, M6,
2	84007510	1	CLAMP,
3	84007509	1	SUPPORT,
4	84007508	1	CLAMP,
5	9993154	3	ELASTIC STRAP,
6	84441150	1	MIRROR,
7	86977786	1	BOLT, Hex, M6 x 25, 8.8,

10.205(B 01) REAR VIEW MIRROR - MANUAL

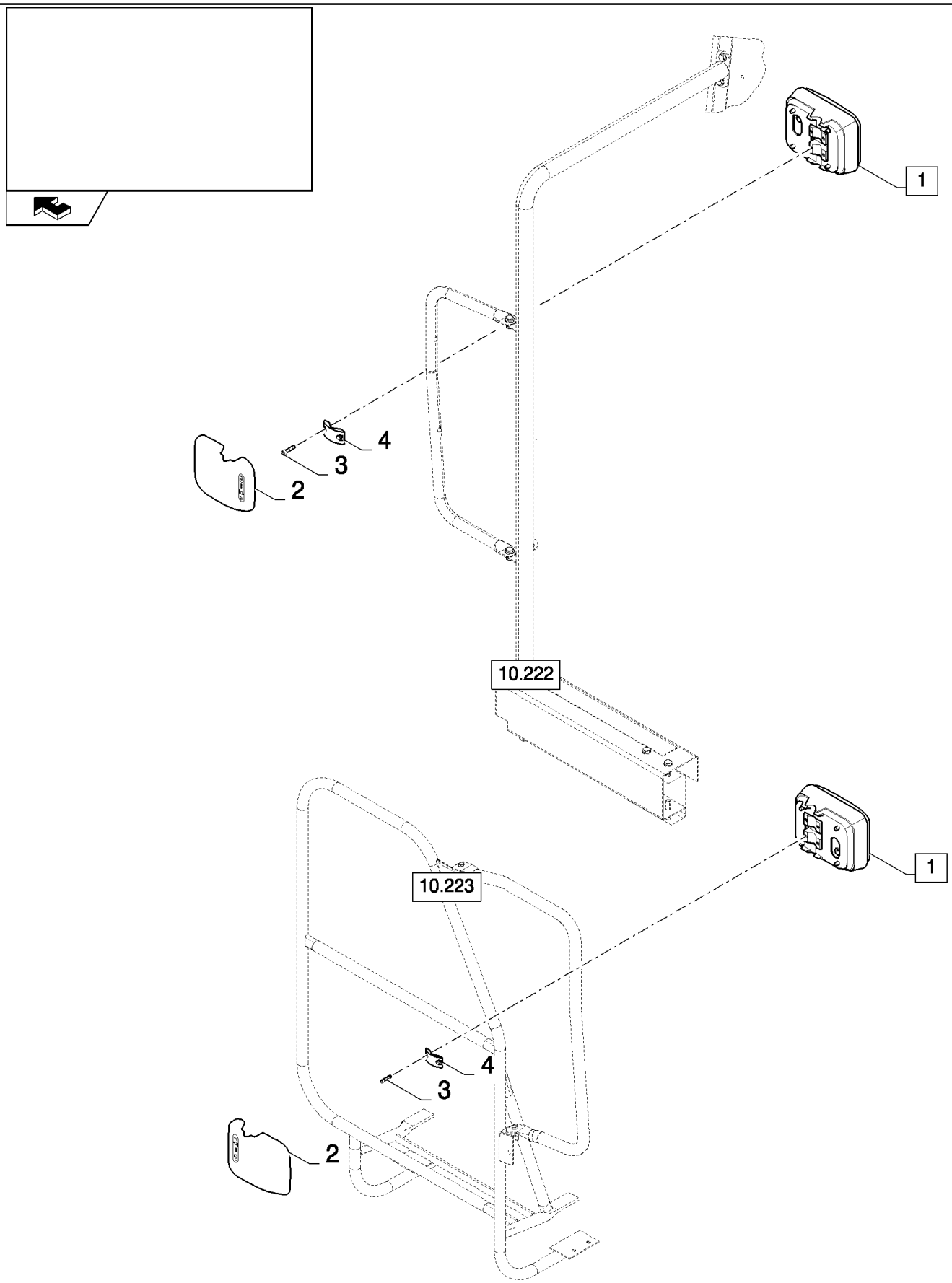

10.205(B 01) REAR VIEW MIRROR - MANUAL

ссылка	Номер детали	Кол-во	Описание
1	84814470	2	MIRROR, REAR-VIEW, (2 to 4)
2	NSS	1	NOT SERVICED SEPARATELY,
3	NSS	4	NOT SERVICED SEPARATELY,
4	NSS	2	NOT SERVICED SEPARATELY,

10.205(C 01) REAR VIEW MIRROR - FOR REMOTE CONTROL

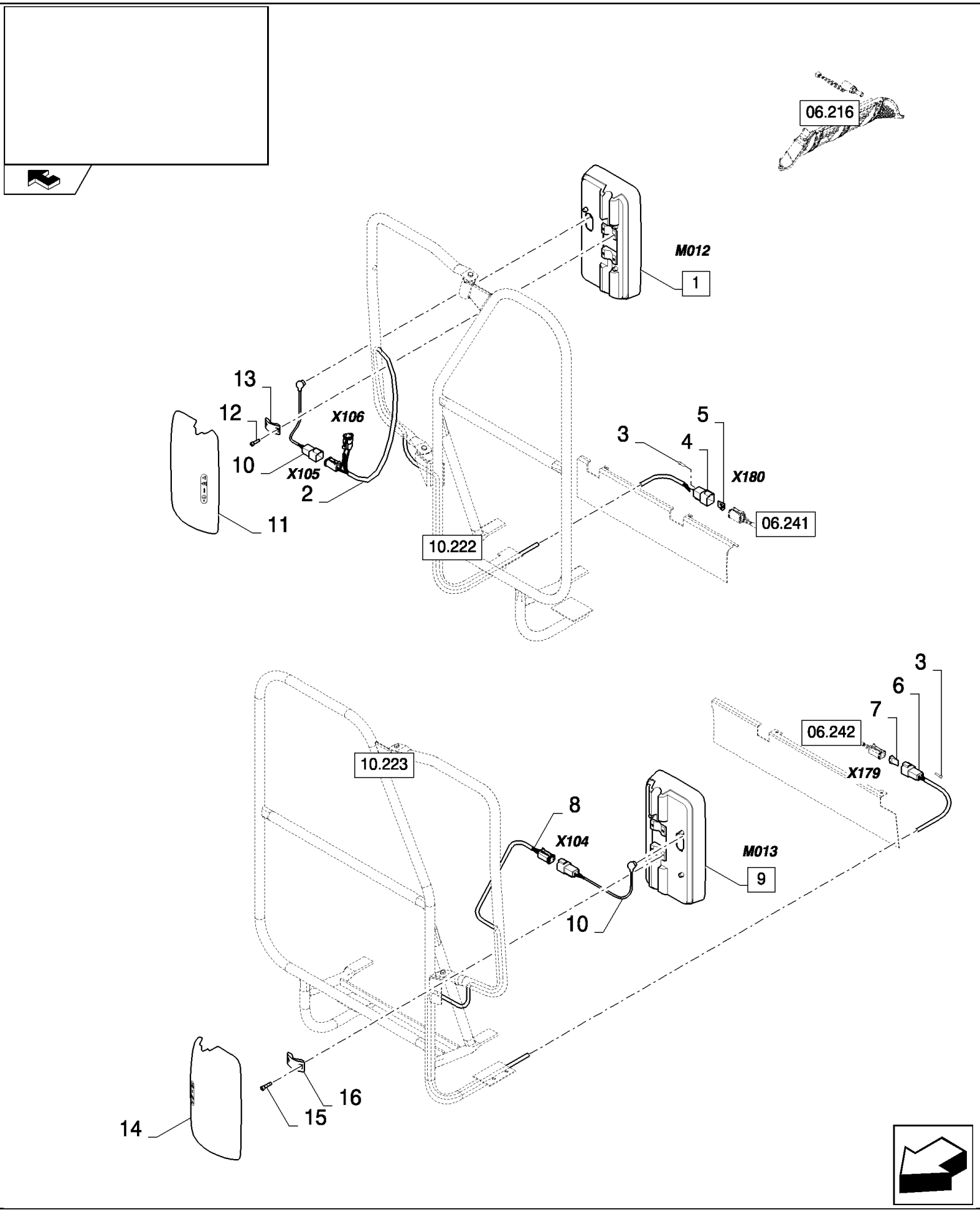

10.205(C 01) REAR VIEW MIRROR - FOR REMOTE CONTROL

ссылка	Номер детали	Кол-во	Описание
1	84059852	1	MIRROR, RH, (11 to 13), FOR REMOTE CONTROL ONLY
2	84441116	1	HARNESS, WIRE, , SEE FIGURE 06.536
3	84068583	2	PLUG,
4	84074642	1	CONNECTOR, WIRE,
5	9861378	1	CONNECTOR, ELEC,
6	84074636	1	CONNECTOR, WIRE,
7	9861376	4	CONNECTOR, WIRE,
8	84441135	2	HARNESS, WIRE, , SEE FIGURE 06.537
9	84059851	1	MIRROR, LH, (14 to 16)
10	84441145	2	HARNESS, WIRE, , SEE FIGURE 06.538 / 06.539
11	NSS	1	NOT SERVICED SEPARATELY,
12	NSS	4	NOT SERVICED SEPARATELY,
13	NSS	2	NOT SERVICED SEPARATELY,
14	NSS	1	NOT SERVICED SEPARATELY,
15	NSS	4	NOT SERVICED SEPARATELY,
16	NSS	2	NOT SERVICED SEPARATELY,

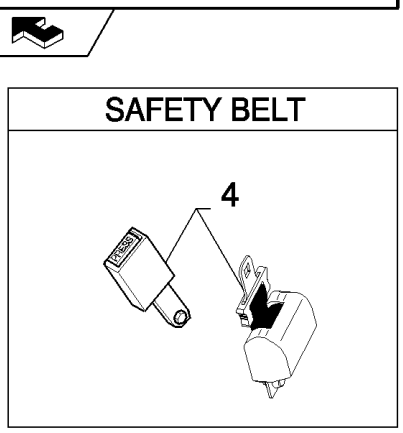
SAFETY BELT
4

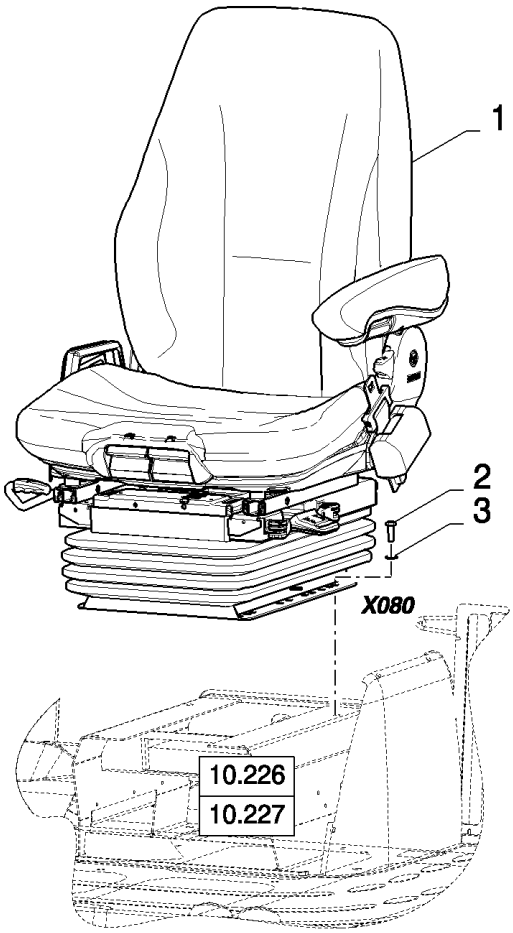
1
2
3
X080
10.226
10.227

CSX7080 C659 - COMBINE (9/06-8/08)

10.207(D 01) AIR SUSPENDED SEAT

ссылка	Номер детали	Кол-во	Описание
1	84800914	1	SEAT, DRIVER, , BSN C599
1	87660562	1	SEAT, DRIVER, , ASN D600
2	43127	4	BOLT, Hex, M8 x 25, 8.8,
3	322358	4	WASHER, SPRING, Belleville, M8,
4	84429853	1	SEAT BELT,

10.208(A 01) CAB MOUNTING GROUP

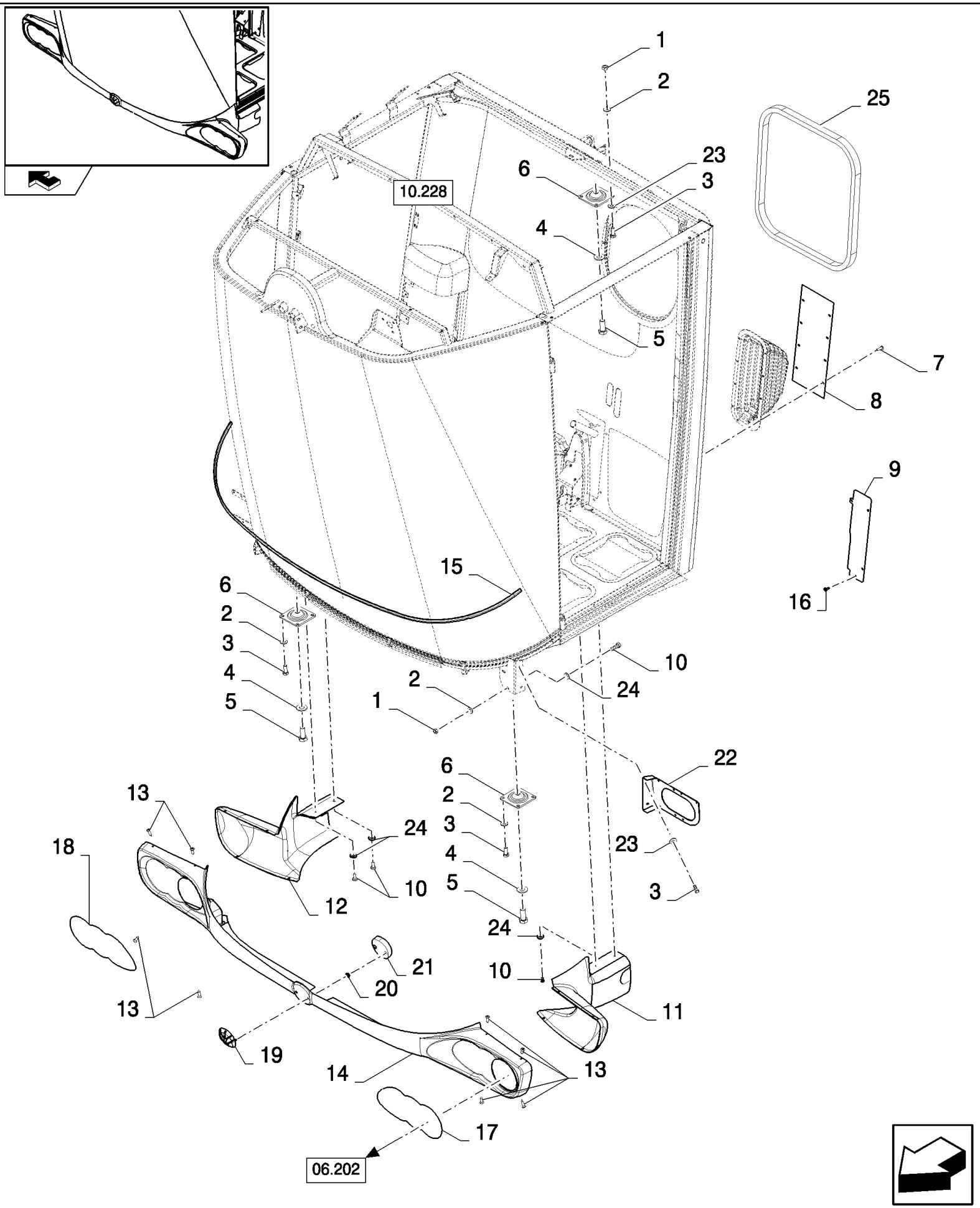

CSX7080 C659 - COMBINE (9/06-8/08)

10.208(A 01) CAB MOUNTING GROUP

ссылка	Номер детали	Кол-во	Описание
1	9706690	6	NUT, M8, Cl 8,
2	322358	14	WASHER, SPRING, Belleville, M8,
3	120104	14	SCREW, Hex, M8 x 20, 8.8,
4	140046	3	WASHER, Belleville, M12,
5	9706687	3	SCREW, Hex, M12 x 30, 8.8,
6	84053736	3	DAMPER,
7	9512968	8	RIVET,
8	87357728	1	CANVAS,
9	87352135	1	PLATE,
10	86508568	8	SCREW, Hex, M6 x 16, 8.8,
11	84447090	1	SKIRT, LH
12	84447091	1	SKIRT, RH
13	86511042	8	SCREW, Cross Pan Hd, M4 x 16,
14	84447092	1	SKIRT, , FOR CSX7060 ONLY
14	84447089	1	SKIRT, , FOR CSX7080 ONLY
15	9501985	1	STRIP, RUBBER, L=2M
16	412491	4	SCREW,
17	84447094	1	DECAL,
18	84447093	1	DECAL,
19	84447098	1	MAKERS BADGE,
20	86625060	2	NUT, Self, Threading, 1/4",
21	84447432	1	SEAL,
22	84448480	1	SUPPORT,
23	86511315	6	WASHER, M8 x 16 x 1.6,
24	322357	8	WASHER, SPRING, Belleville, M6,
25	84037659	1	BAND, L=2M

10.208(C 01) CAB MOUNTING GROUP - FOR LATERALE ONLY

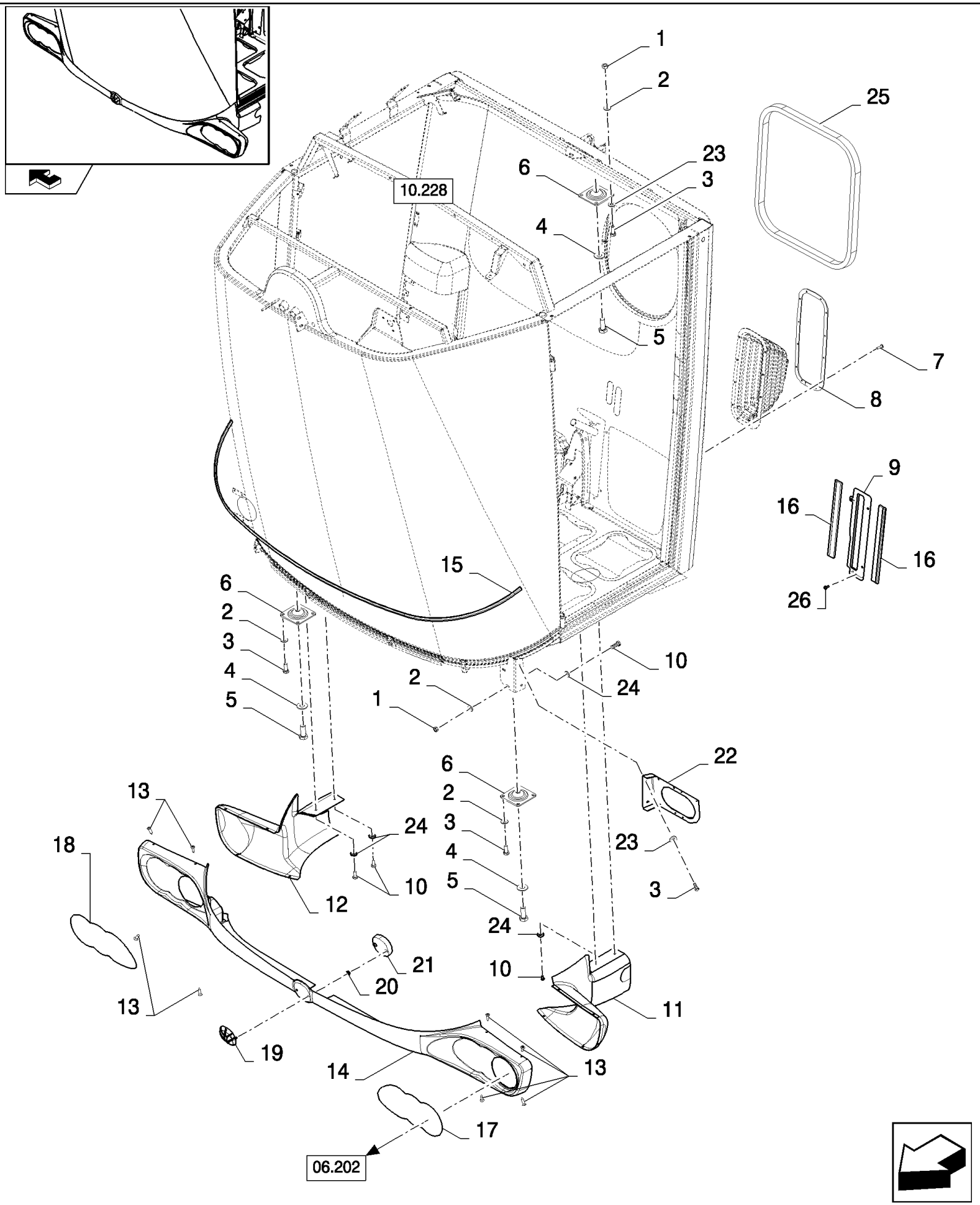

CSX7080 C659 - COMBINE (9/06-8/08)

10.208(C 01) CAB MOUNTING GROUP - FOR LATERALE ONLY

ссылка	Номер детали	Кол-во	Описание
1	9706690	6	NUT, M8, Cl 8,
2	322358	6	WASHER, SPRING, Belleville, M8,
3	120104	6	SCREW, Hex, M8 x 20, 8.8,
4	140046	3	WASHER, Belleville, M12,
5	9706687	3	SCREW, Hex, M12 x 30, 8.8,
6	84053736	3	DAMPER,
7	425524	10	RIVET, Rivet
8	84814492	1	PLATE, FIXING,
9	84807877	1	PLATE,
10	86508568	8	SCREW, Hex, M6 x 16, 8.8,
11	84447090	1	SKIRT, LH
12	84447091	1	SKIRT, RH
13	86511042	8	SCREW, Cross Pan Hd, M4 x 16,
14	84447092	1	SKIRT, , FOR UK ONLY
14	87729648	1	BEZEL,
15	9501985	1	STRIP, RUBBER, L=2M
16	84807784	2	BRUSH,
17	84447094	1	DECAL,
18	84447093	1	DECAL,
19	84447098	1	MAKERS BADGE,
20	86625060	2	NUT, Self, Threading, 1/4",
21	84447432	1	SEAL,
22	84448480	1	SUPPORT,
23	86511315	6	WASHER, M8 x 16 x 1.6,
24	322357	8	WASHER, SPRING, Belleville, M6,
25	84037659	1	BAND, L=2M
26	412491	4	SCREW,

10.210(01) RIGHT HAND CONSOLE

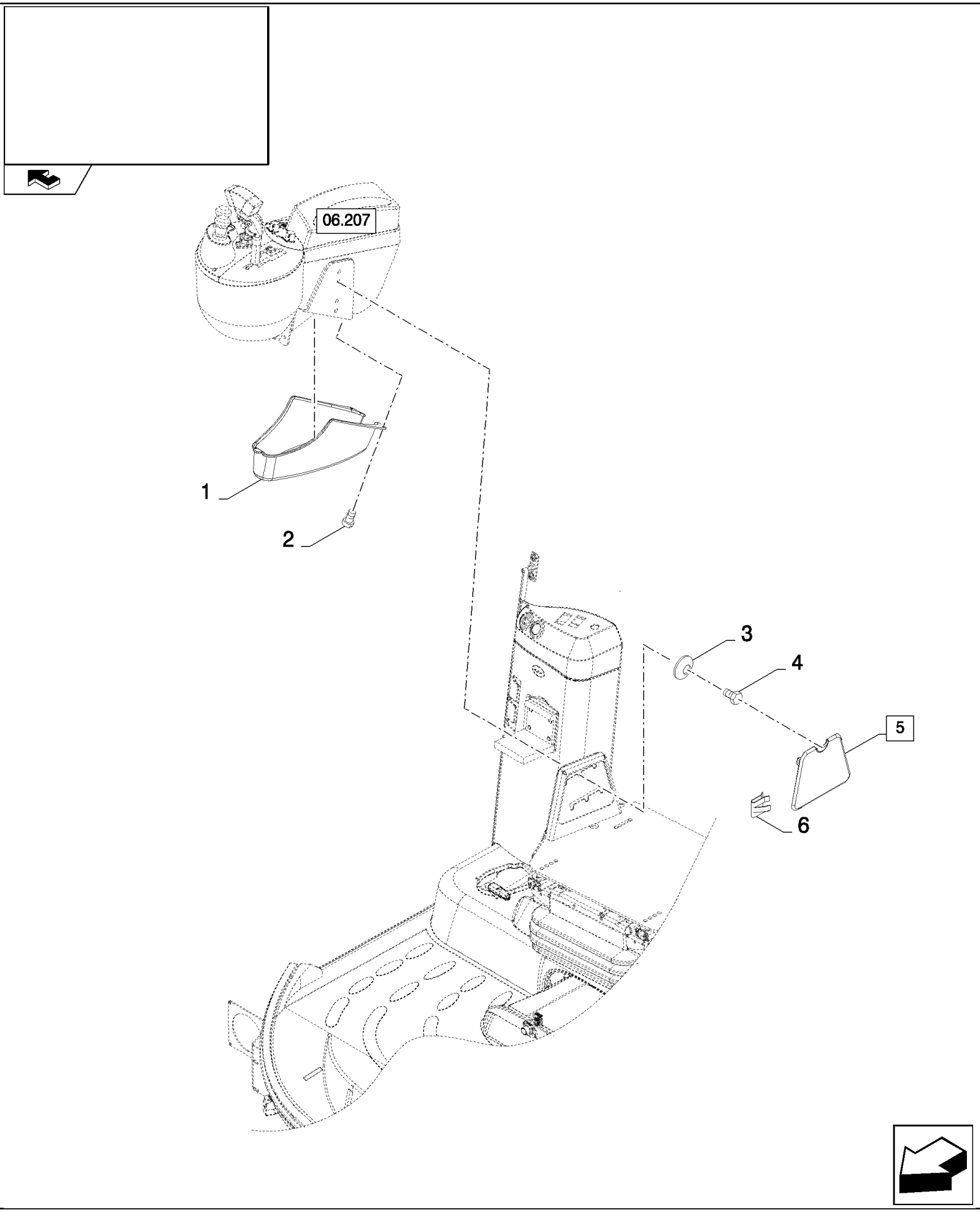

CSX7080 C659 - COMBINE (9/06-8/08)

10.210(01) RIGHT HAND CONSOLE

ссылка	Номер детали	Кол-во	Описание
1	84431122	1	COVER,
2	86511042	2	SCREW, Cross Pan Hd, M4 x 16,
3	322358	2	WASHER, SPRING, Belleville, M8,
4	120104	2	SCREW, Hex, M8 x 20, 8.8,
5	84814584	1	COVER, (6)
6	84814585	2	CLIP,

10.211(01) BUDDY SEAT

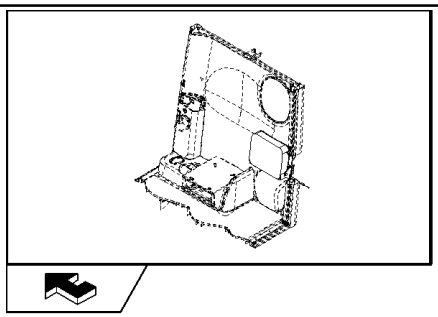

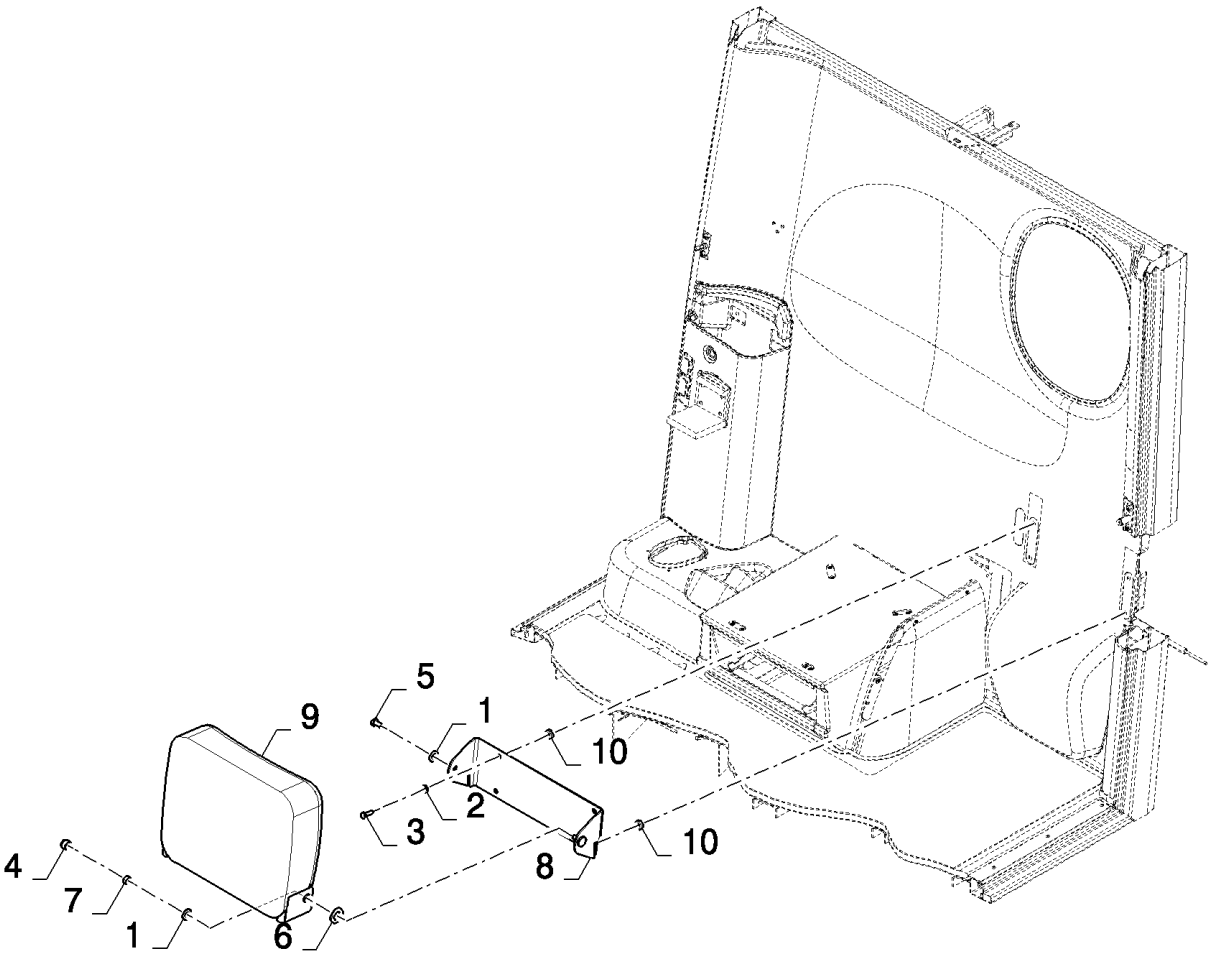

CSX7080 C659 - COMBINE (9/06-8/08)

10.211(01) BUDDY SEAT

ссылка	Номер детали	Кол-во	Описание
1	140046	2	WASHER, Belleville, M12,
2	322358	4	WASHER, SPRING, Belleville, M8,
3	43127	4	BOLT, Hex, M8 x 25, 8.8,
4	747886	1	NUT,
5	43138	1	SCREW, Hex, M10 x 20, 8.8, Full Thd,
6	378247	1	WASHER,
7	100016	1	NUT, M10, Cl 8,
8	87360754	1	SUPPORT,
9	87374531	1	SEAT, PASSENGER, , BSN C599
9	87660566	1	SEAT, DRIVER, , ASN D600
10	84037173	4	ROLLER,

10.212(01) HYDROSTATIC CABLE

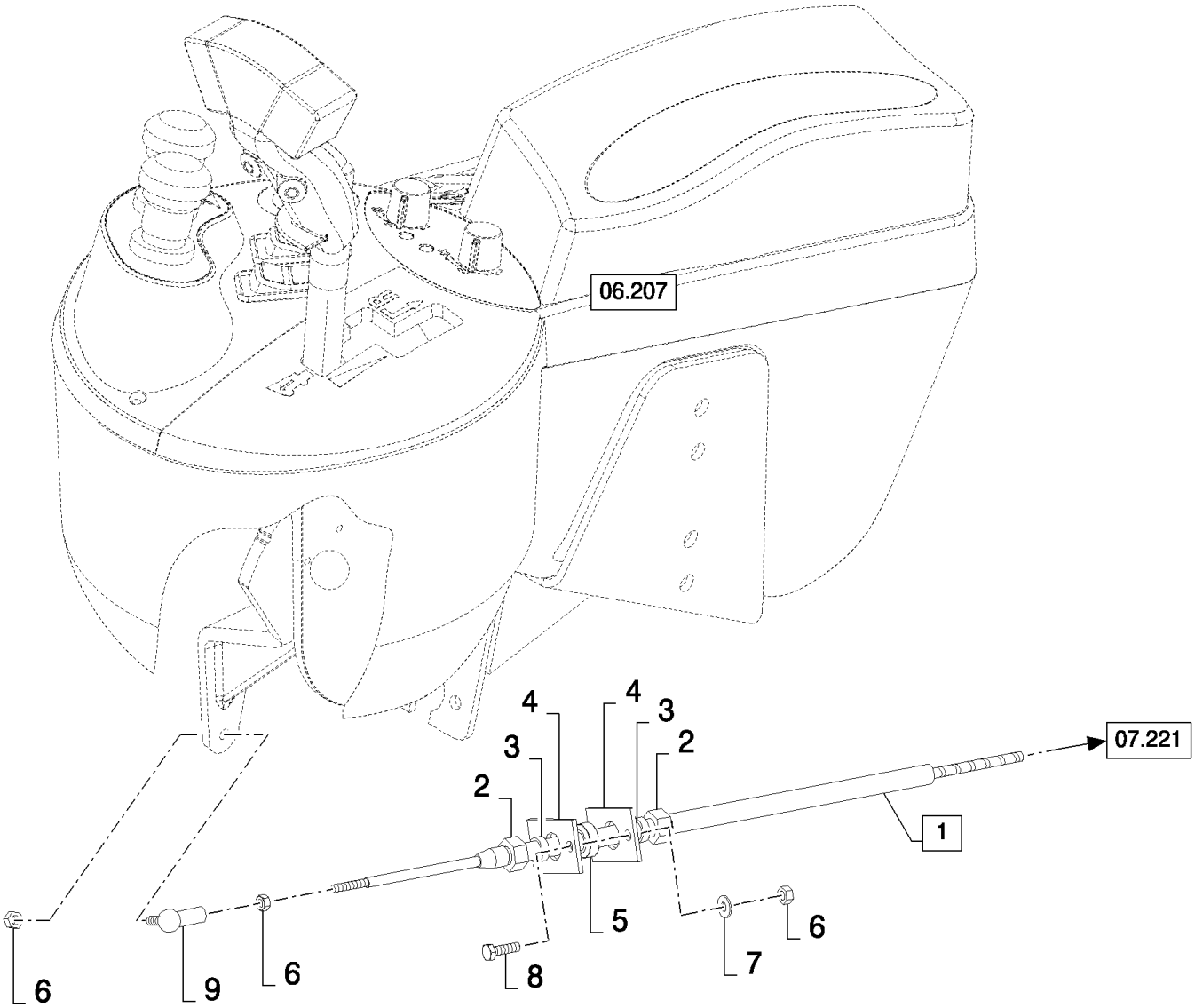

CSX7080 C659 - COMBINE (9/06-8/08)

10.212(01) HYDROSTATIC CABLE

ссылка	Номер детали	Кол-во	Описание
1	84807922	1	CABLE, (2 to 6)
2	354145	4	NUT, M12x1
3	750159	4	BUSHING,
4	9508941	4	PLATE,
5	750158	2	BALL JOINT,
6	9706755	5	NUT, M6, Cl 8,
7	322357	2	WASHER, SPRING, Belleville, M6,
8	120100	2	BOLT, Hex, M6 x 20, 8.8,
9	412531	1	BALL JOINT,

10.213(01) GEARSHIFT CONTROL

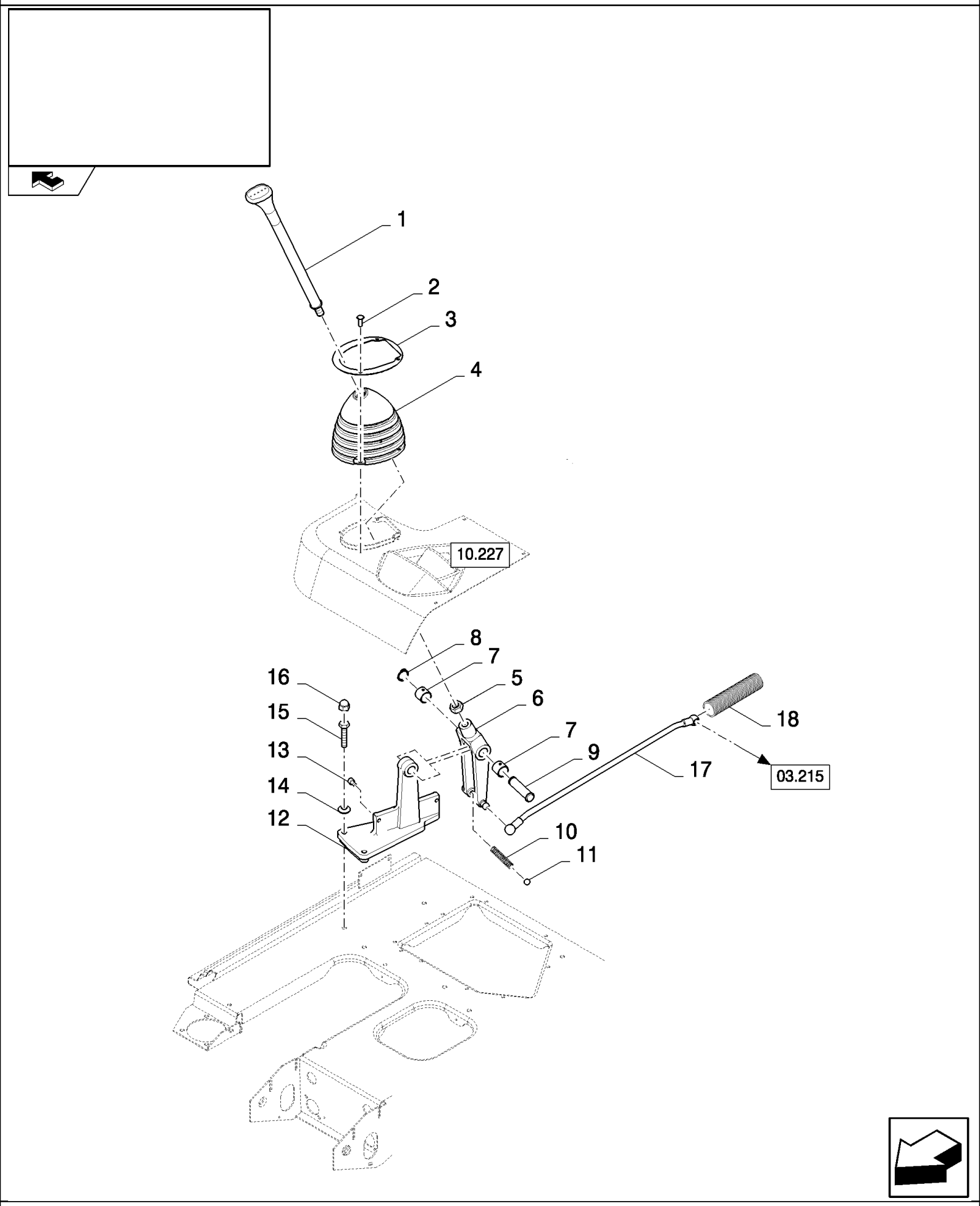

CSX7080 C659 - COMBINE (9/06-8/08)

10.213(01) GEARSHIFT CONTROL

ссылка	Номер детали	Кол-во	Описание
1	84077265	1	HANDLE,
2	84607894	4	PLUG,
3	84433803	1	PLATE, COVER, , BSN C551
4	84320415	1	BELLOWS,
5	364164	1	NUT, Thin, M16 x 1.5, Cl 04, M16x1.5
6	84433403	1	LEVER,
7	420761	2	BUSHING,
8	370024	1	RING, SNAP, M20, Ext,
9	9831112	1	PIN,
10	84041522	1	SPRING,
11	84041521	1	BALL,
12	84433432	1	SUPPORT,
13	86566099	2	SCREW, Hex Soc Hd, M8 x 16, 12.9, M8x16
14	140045	3	WASHER, SPRING, Belleville, M10,
15	120069	3	SCREW, Hex, M10 x 50, 8.8,
16	747886	3	NUT,
17	87315710	1	ROD, CONNECTING,
18	9507231	1	TUBE, L=0.125M

10.214(01) FIRE EXTINGUISHER

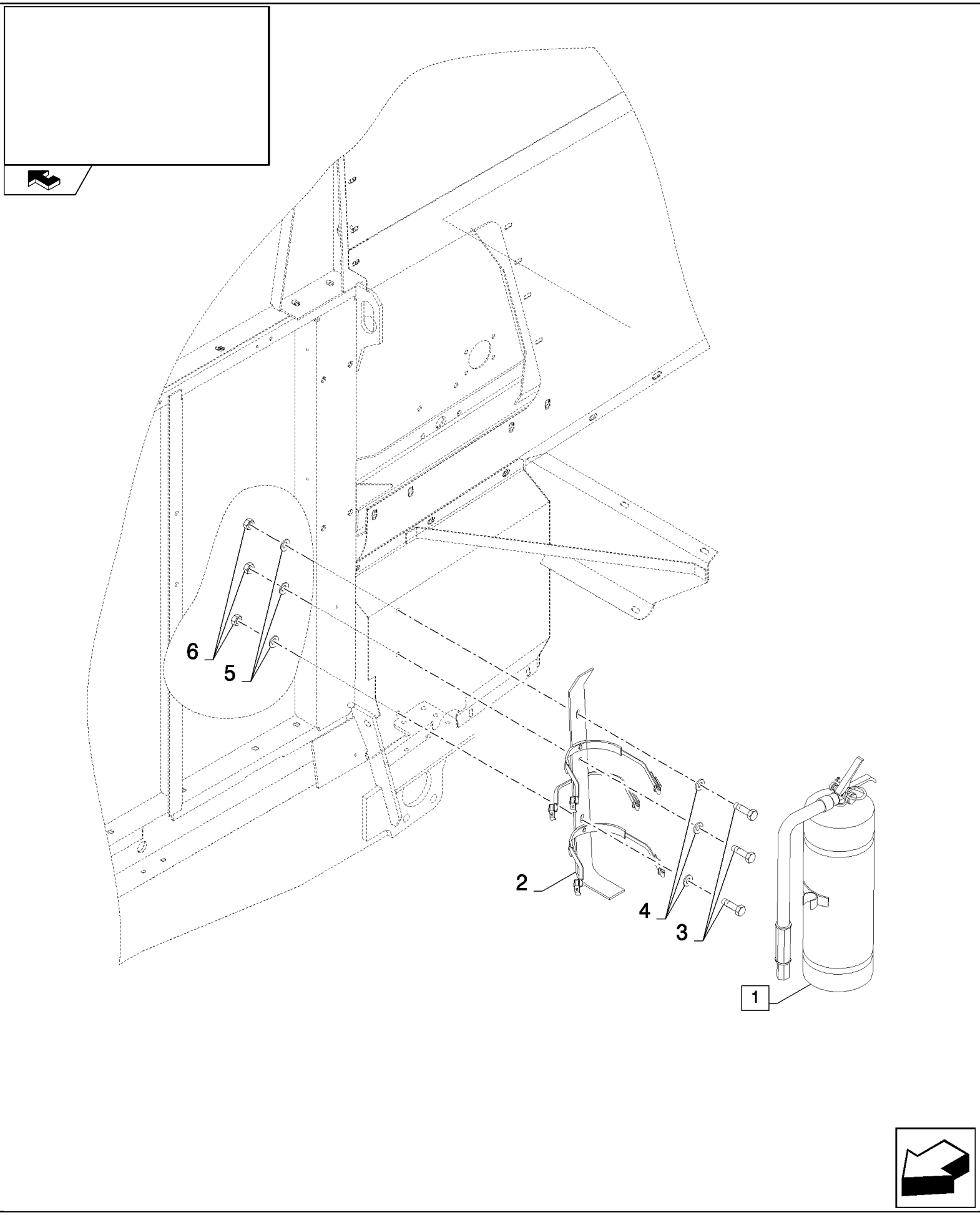

CSX7080 C659 - COMBINE (9/06-8/08)

10.214(01) FIRE EXTINGUISHER

ссылка	Номер детали	Кол-во	Описание
1	NS	1	NOT SERVICED, (2), BSN C543
1	84440547	1	FIRE EXTINGUISHER, (2), ASN D544
2	NSS	1	NOT SERVICED SEPARATELY,
3	120104	3	SCREW, Hex, M8 x 20, 8.8, , BSN C543
3	43127	2	BOLT, Hex, M8 x 25, 8.8, , ASN D544
4	140016	3	WASHER, M8 x 16 x 1.6, , BSN C543
4	140016	2	WASHER, M8 x 16 x 1.6, , ASN D544
5	412650	3	WASHER, Belleville, M8, , BSN C543
5	412650	2	WASHER, Belleville, M8, , ASN D544
6	9706690	3	NUT, M8, Cl 8, , BSN C543
6	9706690	2	NUT, M8, Cl 8, , ASN D544

10.215(01) CAB ROOF LIGHTS

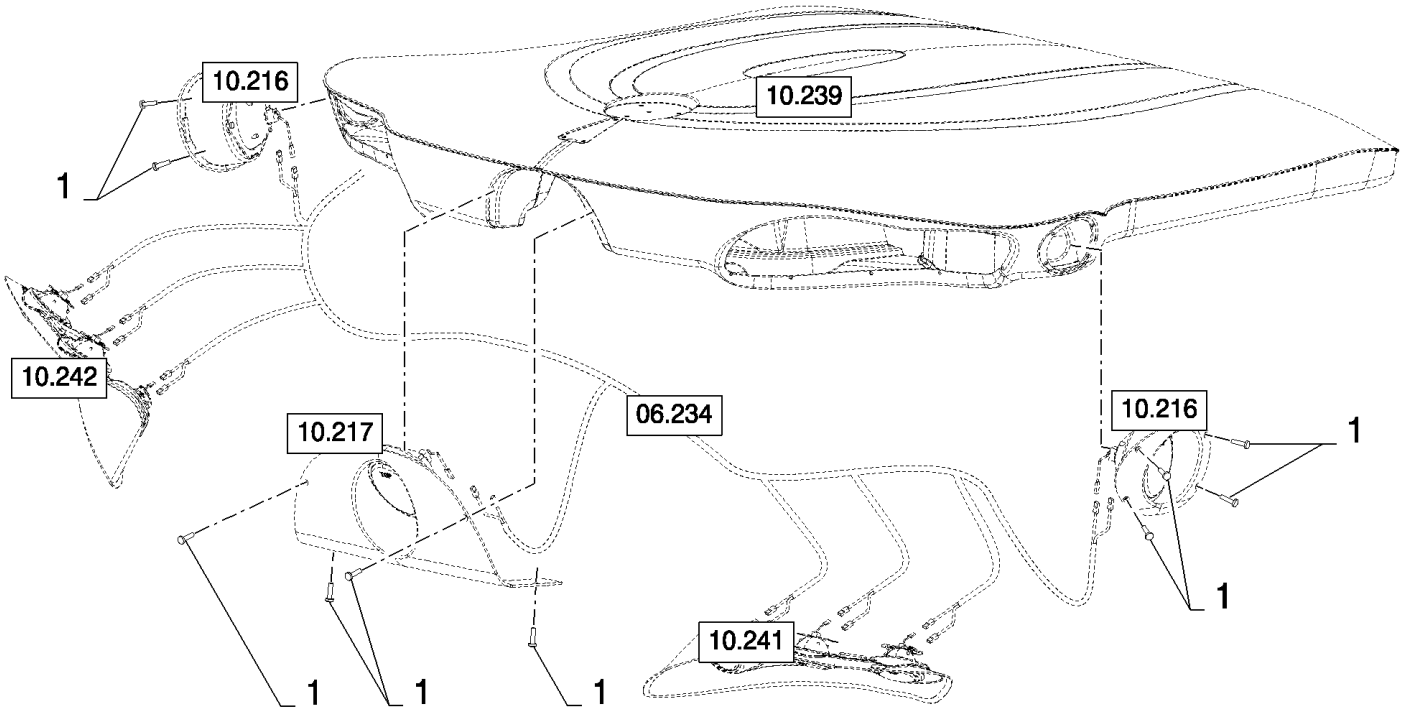

CSX7080 C659 - COMBINE (9/06-8/08)

10.215(01) CAB ROOF LIGHTS

ссылка	Номер детали	Кол-во	Описание
1	86511042	12	SCREW, Cross Pan Hd, M4 x 16,

10.216(01) CAB ROOF LIGHTS, LH AND RH

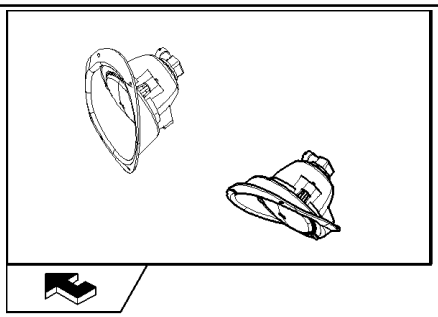

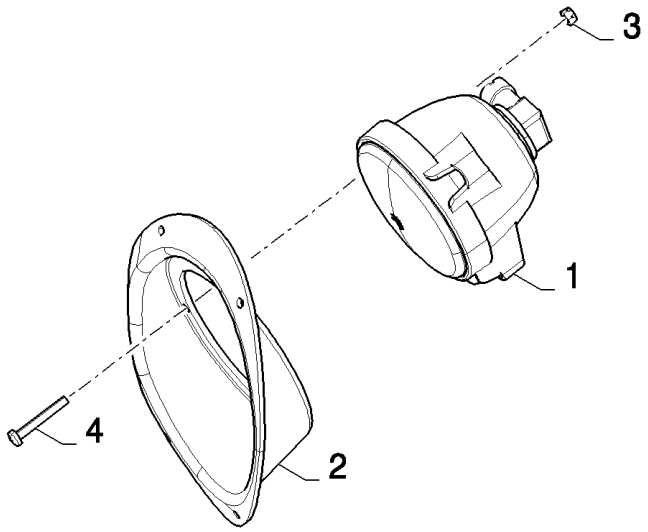

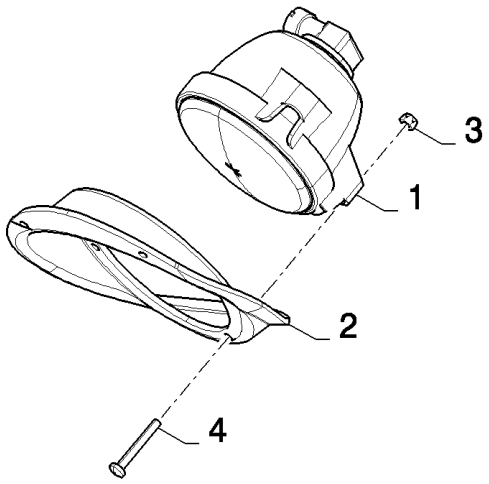

CSX7080 C659 - COMBINE (9/06-8/08)

10.216(01) CAB ROOF LIGHTS, LH AND RH

ссылка	Номер детали	Кол-во	Описание
1	87521890	1	LAMP, , NO SUBPARTS YET AVAILABLE
2	87399060	1	BEZEL, RH
2	87399064	1	BEZEL, LH
3	385681	3	NUT, LOCK, M4 x .7, Cl 8,
4	86511825	3	SCREW, Cross Pan Hd, M4 x 30,

10.217(01) CAB ROOF LIGHTS, MIDDLE

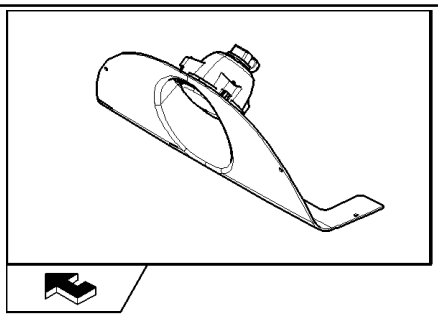

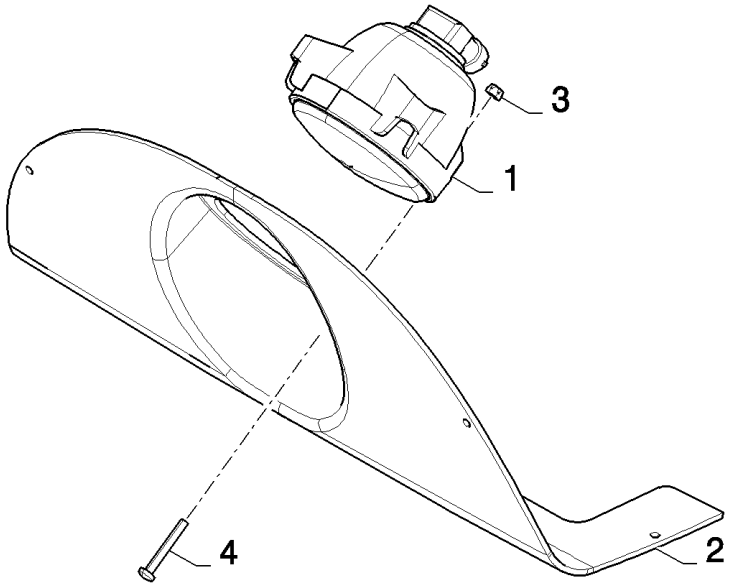

CSX7080 C659 - COMBINE (9/06-8/08)

10.217(01) CAB ROOF LIGHTS, MIDDLE

ссылка	Номер детали	Кол-во	Описание
1	87521890	1	LAMP, , NO SUBPARTS YET AVAILABLE
2	87399062	1	BEZEL,
3	385681	3	NUT, LOCK, M4 x .7, Cl 8,
4	86511825	3	SCREW, Cross Pan Hd, M4 x 30,

10.218(01) WARNING LIGHTS

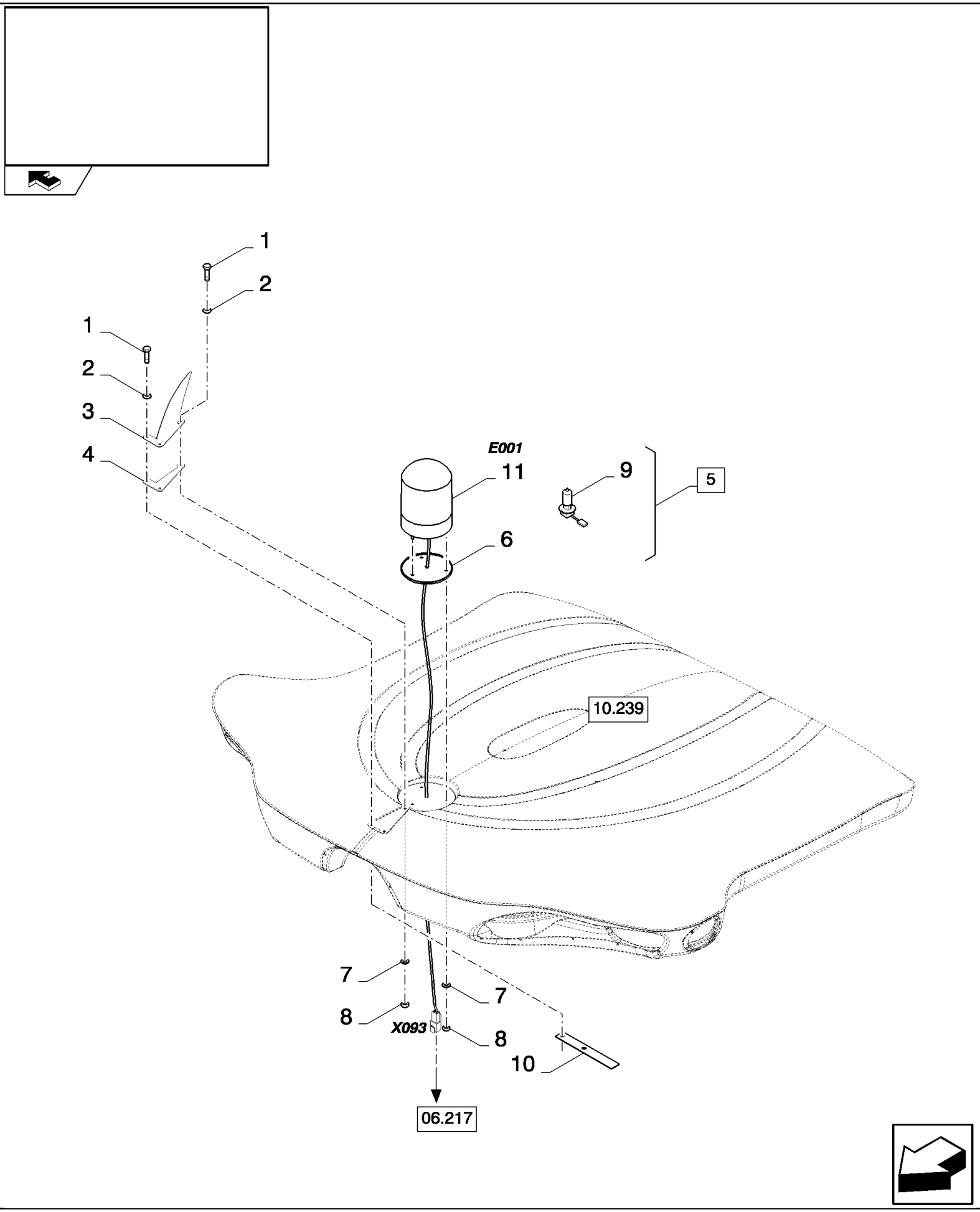

CSX7080 C659 - COMBINE (9/06-8/08)

10.218(01) WARNING LIGHTS

ссылка	Номер детали	Кол-во	Описание
1	43117	3	BOLT, Hex, M6 x 30, 8.8,
2	9824259	3	WASHER, M6 x 12 x 1.6,
3	84801125	1	PLATE,
4	84443967	1	SEAL,
5	87050694	1	BEACON, (6, 9, 11), SEE FIGURE 06.701
6	NSS	1	NOT SERVICED SEPARATELY,
7	84007539	9	WASHER,
8	9706755	6	NUT, M6, Cl 8,
9	86616248	1	BULB, #HI, 55w,
10	84807642	1	PLATE, FIXING,
11	87746025	1	GLASS,

10.220(01) OPERATOR'S PLATFORM LADDER

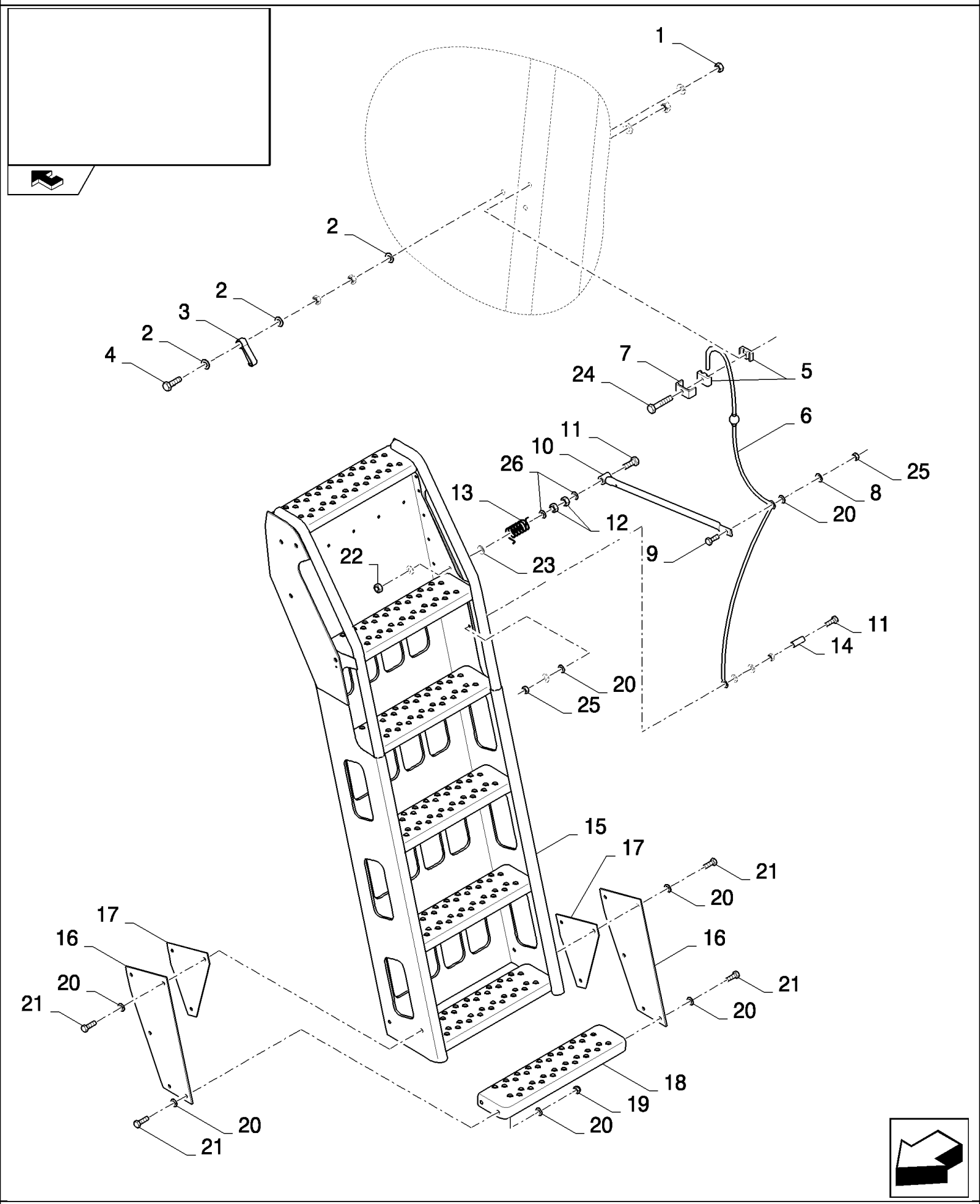

CSX7080 C659 - COMBINE (9/06-8/08)

10.220(01) OPERATOR'S PLATFORM LADDER

ссылка	Номер детали	Кол-во	Описание
1	412649	1	WASHER, SPRING, Belleville, M6,
2	412152	3	NUT, LOCK, M6 x 1, Cl 8.8,
3	354957	1	HOOK,
4	43130	1	BOLT, Hex, M8 x 50, 8.8,
5	430357	2	CLAMP,
6	84022066	1	ROPE,
7	431941	1	SUPPORT,
8	322358	4	WASHER, SPRING, Belleville, M8,
9	43128	1	BOLT, Hex, M8 x 30, 8.8,
10	84449275	1	LEVER,
11	86977784	2	SCREW, M8x60
12	9706690	2	NUT, M8, Cl 8,
13	84014761	1	SPRING,
14	9507815	1	GROMMET,
15	84807561	1	LADDER,
16	84035267	2	PLATE, COVER,
17	84439187	2	PLATE, COVER,
18	84807539	1	STEP,
19	9628098	10	NUT, LOCK, M8 x 1.25, Cl 10,
20	140041	23	WASHER, M8 x 28 x 3,
21	412479	10	BOLT, Hex, M8 x 35, 8.8,
22	412250	1	NUT, LOCK, M8 x 1.25, Cl 8,
23	378243	2	WASHER, M8,
24	86977790	1	SCREW, Hex, M6 x 45, 8.8,
25	86629542	7	NUT, LOCK, M8 x 1.25, Cl 8,
26	140016	2	WASHER, M8 x 16 x 1.6,

10.220(A 01) OPERATOR'S PLATFORM LADDER - FOR LATERALE ONLY

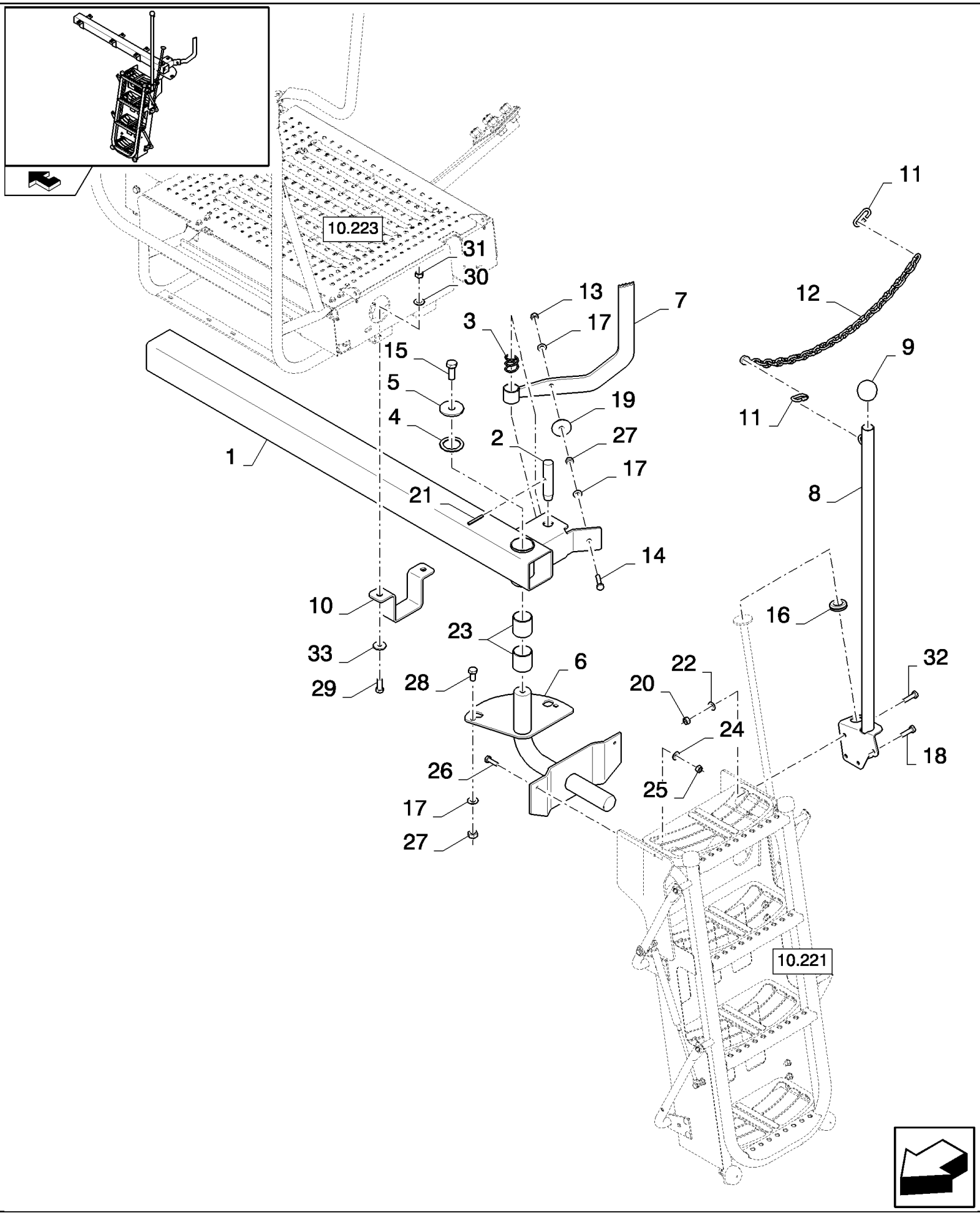

CSX7080 C659 - COMBINE (9/06-8/08)

10.220(A 01) OPERATOR'S PLATFORM LADDER - FOR LATERALE ONLY

ссылка	Номер детали	Кол-во	Описание
1	87656405	1	TUBE, SUPPORT,
2	87106596	1	PIN,
3	87109472	1	SPRING,
4	87697088	1	RING, LOCKING,
5	84017220	1	WASHER,
6	87652136	1	CONNECTION, SWIVEL,
7	87692920	1	HANDLE,
8	87648900	1	HANDRAIL,
9	87109879	1	KNOB,
10	87656409	3	BRACKET,
11	87107072	2	LINK,
12	87576336	1	CHAIN,
13	100037	2	NUT, M10 x 1.5, Cl 8,
14	325829	1	BOLT, Hex, M10 x 45, 8.8,
15	43168	1	BOLT, Hex, M16 x 40, 8.8,
16	173011	1	GROMMET,
17	140045	4	WASHER, SPRING, Belleville, M10,
18	120104	3	SCREW, Hex, M8 x 20, 8.8,
19	87024930	1	WASHER,
20	9706690	4	NUT, M8, Cl 8,
21	87020818	1	PIN, LOCK, 1/4" x 2", Slotted,
22	322358	4	WASHER, SPRING, Belleville, M8,
23	87670634	2	BUSHING,
24	322357	2	WASHER, SPRING, Belleville, M6,
25	9706755	2	NUT, M6, Cl 8,
26	120100	2	BOLT, Hex, M6 x 20, 8.8,
27	100016	3	NUT, M10, Cl 8,
28	43138	2	SCREW, Hex, M10 x 20, 8.8, Full Thd,
29	9706687	6	SCREW, Hex, M12 x 30, 8.8, , BSN C615
29	300389	6	BOLT, Hex, M12 x 35, 8.8, Full Thd, , ASN D616
30	140046	6	WASHER, Belleville, M12,
31	337475	6	NUT, M12, Cl 10,
32	43128	1	BOLT, Hex, M8 x 30, 8.8,
33	9511052	6	WASHER, M12 x 44 x 4, , ASN D616

10.221(01) OPERATOR'S PLATFORM LADDER

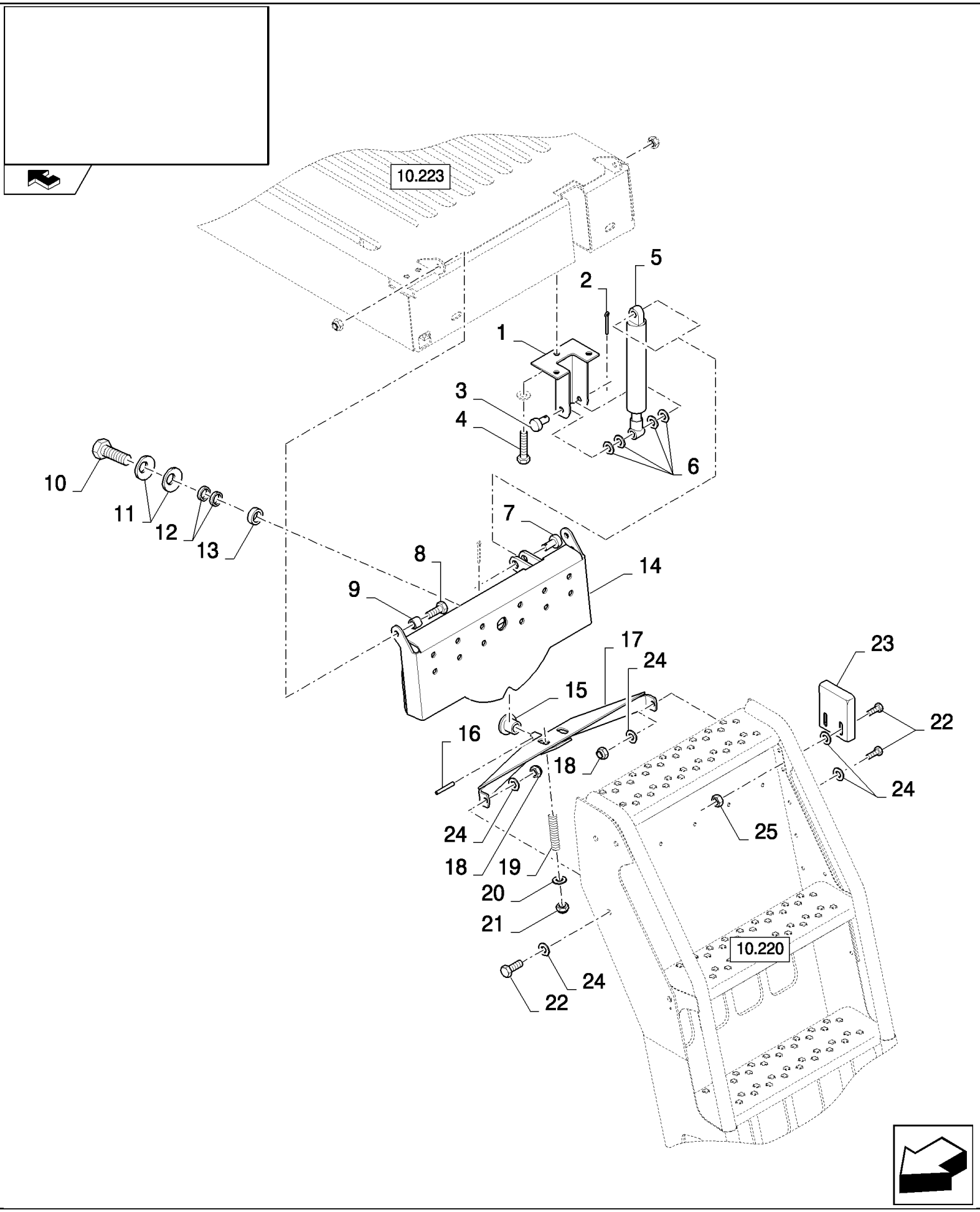

CSX7080 C659 - COMBINE (9/06-8/08)

10.221(01) OPERATOR'S PLATFORM LADDER

ссылка	Номер детали	Кол-во	Описание
1	84439212	1	SUPPORT,
2	130003	2	PIN, SPLIT (COTTER), M3.2 x 20,
3	379547	1	PIN, CLEVIS, M10 x 60,
4	120112	3	BOLT, Hex, M10 x 40, 8.8, Full Thd,
5	89818978	1	SHOCK ABSORBER,
6	140079	4	WASHER,
7	390040	1	PIN, CLEVIS, M10 x 35,
8	43140	2	BOLT, Hex, M10 x 30, 8.8, Full Thd,
9	9838548	2	BUSHING,
10	120090	1	SCREW, Hex, M16 x 50, 8.8,
11	325594	2	WASHER,
12	748217	2	PLATE, ADJUSTING,
13	458871	1	BUSHING,
14	84807538	1	SUPPORT,
15	913654	1	BUSHING,
16	9510330	1	PIN, ROLL,
17	84807536	1	SUPPORT,
18	100037	4	NUT, M10 x 1.5, Cl 8,
19	9509233	2	SPRING,
20	140042	2	WASHER, M10 x 34 x 3,
21	412141	2	NUT, LOCK, M10 x 1.5, Cl 8,
22	43138	4	SCREW, Hex, M10 x 20, 8.8, Full Thd,
23	84807534	1	SUPPORT,
24	140045	13	WASHER, SPRING, Belleville, M10,
25	100016	5	NUT, M10, Cl 8,

10.221(A 01) OPERATOR'S PLATFORM LADDER - FOR LATERALE ONLY

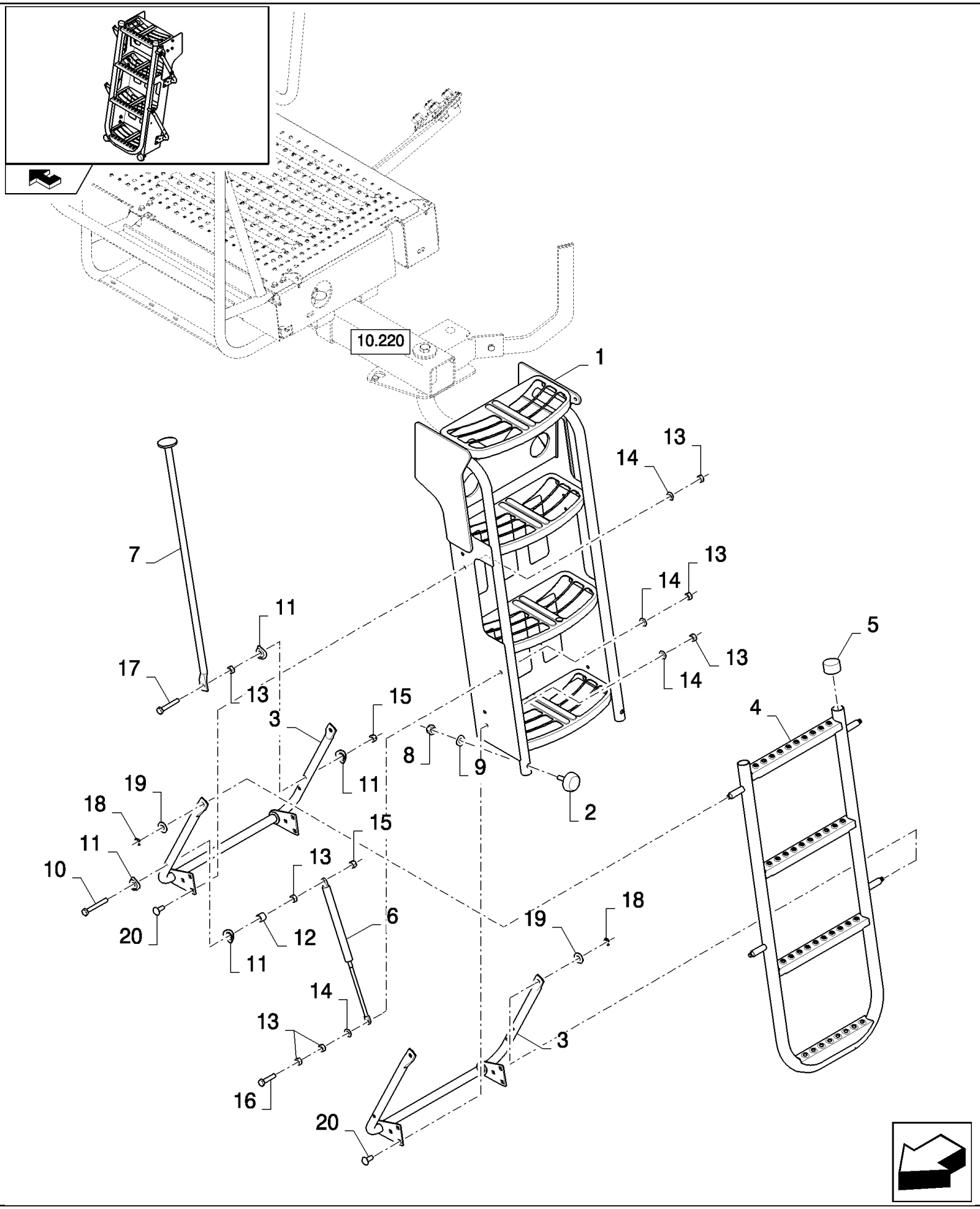

CSX7080 C659 - COMBINE (9/06-8/08)

10.221(A 01) OPERATOR'S PLATFORM LADDER - FOR LATERALE ONLY

ссылка	Номер детали	Кол-во	Описание
1	87595893	1	LADDER,
2	84440416	2	INSULATOR BLOCK,
3	87643905	2	HANDRAIL,
4	87643899	1	LADDER,
5	84014501	2	PLUG,
6	9832424	1	SHOCK ABSORBER,
7	87648903	1	HANDRAIL,
8	100037	1	NUT, M10 x 1.5, Cl 8,
9	140045	2	WASHER, SPRING, Belleville, M10,
10	86977784	1	SCREW,
11	333962	4	CLAMP,
12	9838548	1	BUSHING,
13	9706690	13	NUT, M8, Cl 8,
14	322358	10	WASHER, SPRING, Belleville, M8,
15	86629542	2	NUT, LOCK, M8 x 1.25, Cl 8,
16	412479	1	BOLT, Hex, M8 x 35, 8.8,
17	120107	1	BOLT, Hex, M8 x 50, 8.8, Full Thd,
18	9992582	4	LOCK,
19	378244	4	WASHER, M10,
20	86507486	8	BOLT, CARRIAGE, Short NK, M8 x 20, Cl8.8, Full Thd,

10.222(01) OPERATOR'S PLATFORM, RH

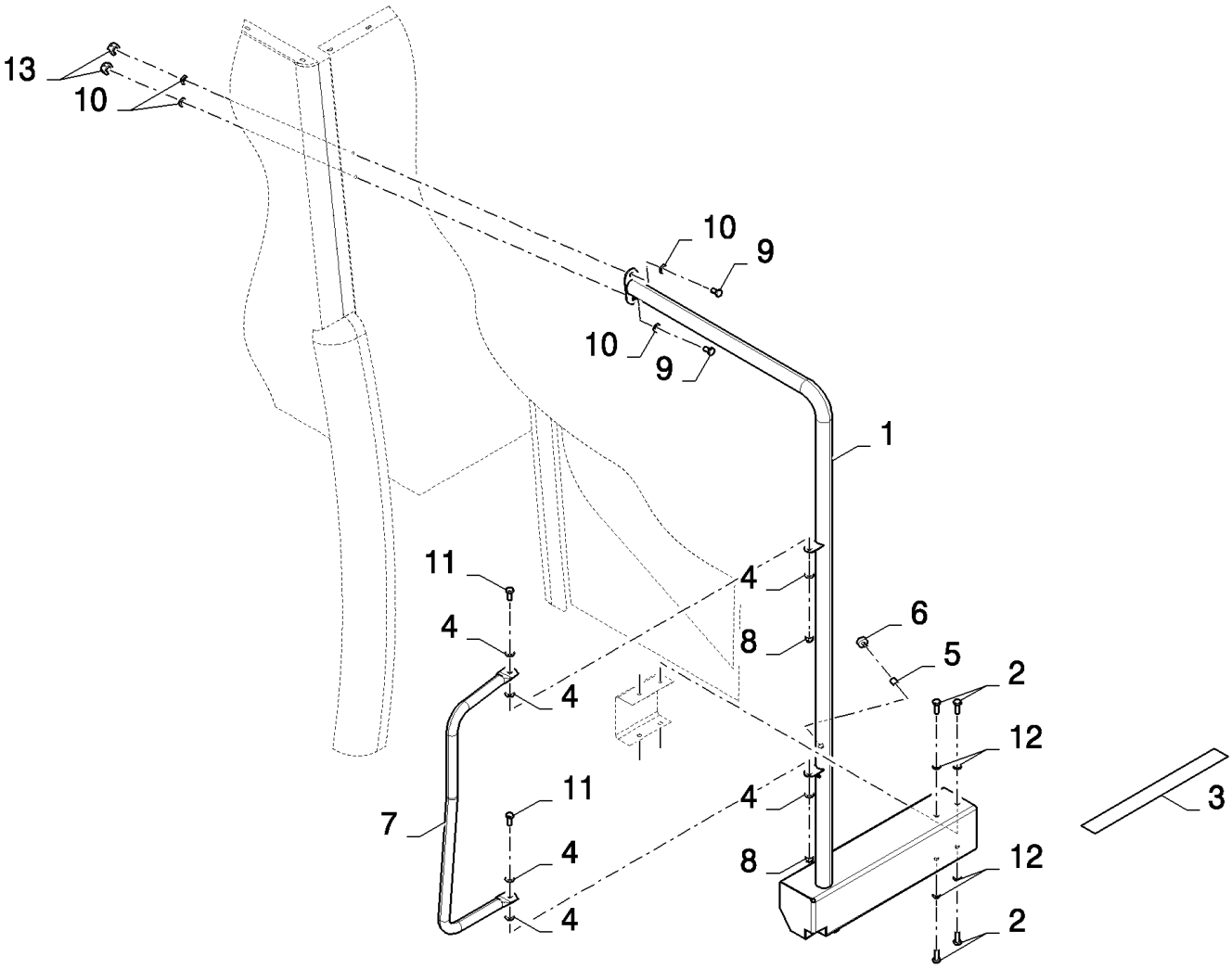

CSX7080 C659 - COMBINE (9/06-8/08)

10.222(01) OPERATOR'S PLATFORM, RH

ссылка	Номер детали	Кол-во	Описание
1	87355041	1	RAIL, SIDE,
2	43140	4	BOLT, Hex, M10 x 30, 8.8, Full Thd,
3	401502	1	STRIP, ANTI-SKID, L=0.48M
4	378244	6	WASHER, M10,
5	87282347	1	INSERT, THREADED, M8
6	84000555	1	INSULATOR BLOCK,
7	87355788	1	RAIL, SIDE,
8	100037	2	NUT, M10 x 1.5, Cl 8,
9	43138	2	SCREW, Hex, M10 x 20, 8.8, Full Thd, , BSN C551
9	120104	2	SCREW, Hex, M8 x 20, 8.8, , ASN D552
10	140045	2	WASHER, SPRING, Belleville, M10, , BSN C551
10	322358	4	WASHER, SPRING, Belleville, M8, , ASN D552
11	43139	2	SCREW, Hex, M10 x 25, 8.8, Full Thd,
12	86511323	4	WASHER, M10 x 20 x 2,
13	43442	2	NUT, , ASN D552

10.222(A 01) OPERATOR'S PLATFORM, RH - FOR LATERALE ONLY

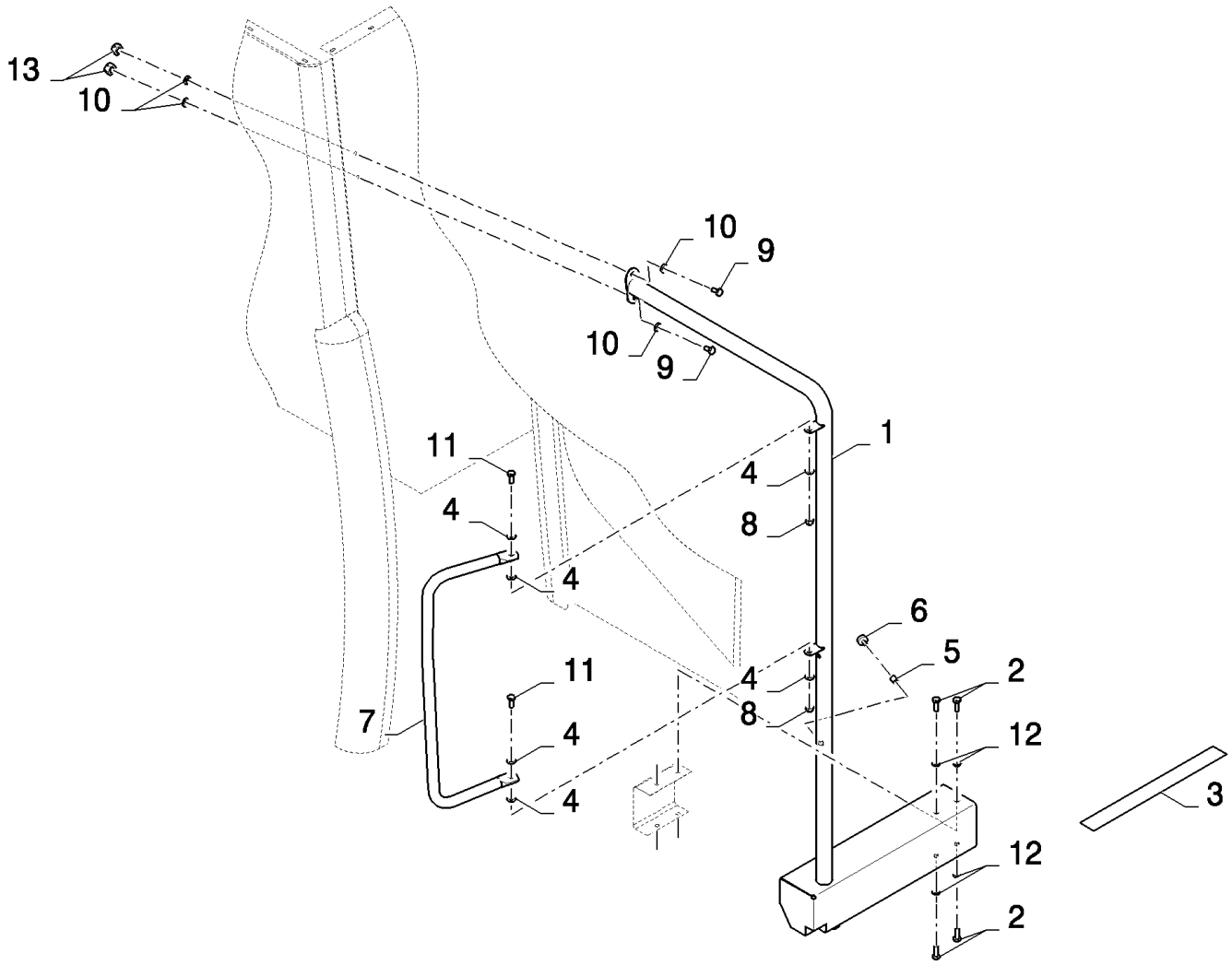

CSX7080 C659 - COMBINE (9/06-8/08)

10.222(A 01) OPERATOR'S PLATFORM, RH - FOR LATERALE ONLY

ссылка	Номер детали	Кол-во	Описание
1	87713622	1	RAIL, SIDE,
2	43140	4	BOLT, Hex, M10 x 30, 8.8, Full Thd,
3	401502	1	STRIP, ANTI-SKID, L=0.48M
4	378244	6	WASHER, M10,
5	87282347	1	INSERT, THREADED, M8
6	84000555	1	INSULATOR BLOCK,
7	87656411	1	RAIL, SIDE,
8	100037	2	NUT, M10 x 1.5, Cl 8,
9	120104	2	SCREW, Hex, M8 x 20, 8.8,
10	322358	4	WASHER, SPRING, Belleville, M8,
11	43139	2	SCREW, Hex, M10 x 25, 8.8, Full Thd,
12	86511323	4	WASHER, M10 x 20 x 2,
13	43442	2	NUT,

10.223(01) OPERATOR'S PLATFORM, LH

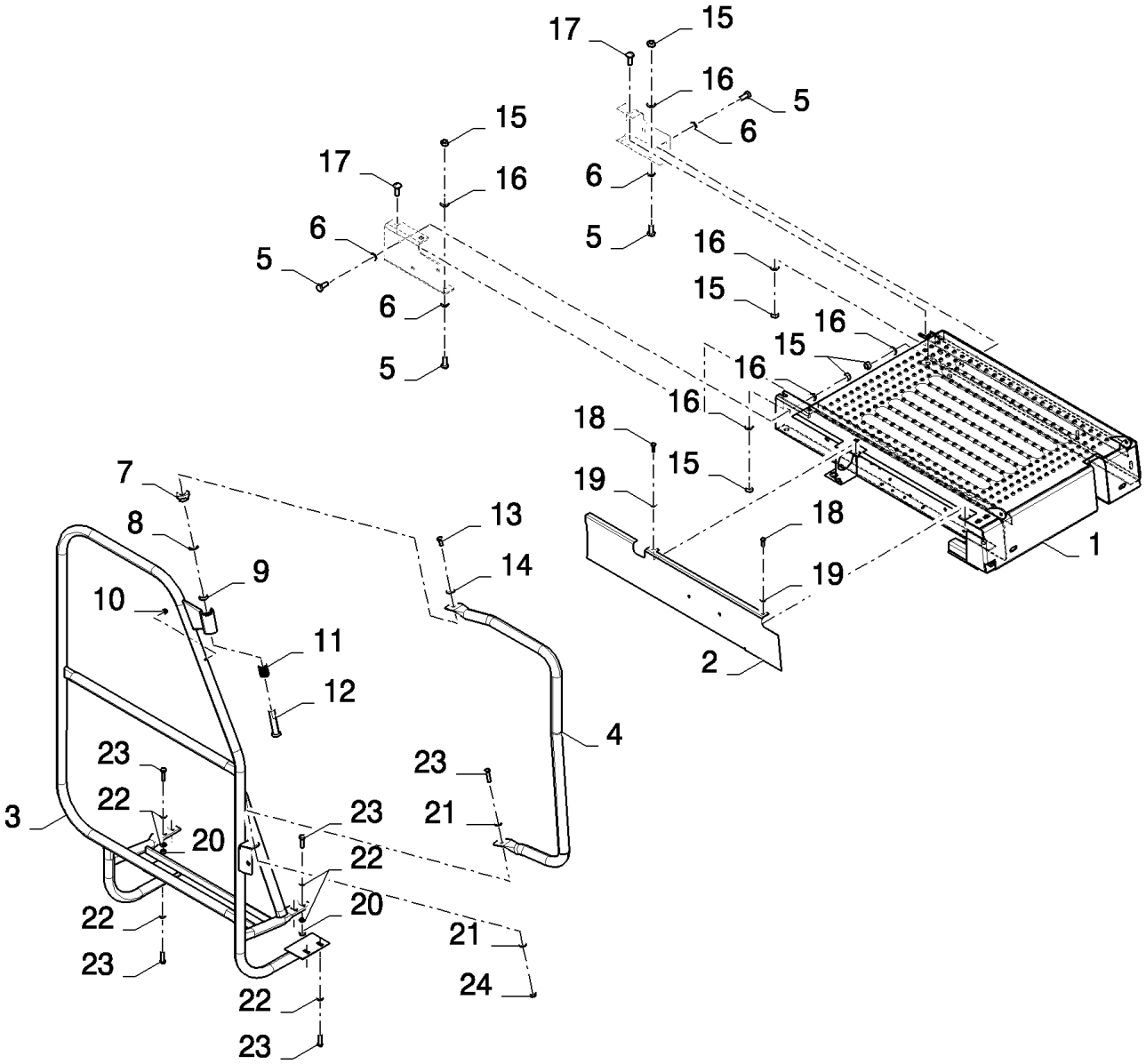

CSX7080 C659 - COMBINE (9/06-8/08)

10.223(01) OPERATOR'S PLATFORM, LH

ссылка	Номер детали	Кол-во	Описание
1	84807956	1	PLATFORM,
2	84807980	1	PLATE,
3	84814008	1	HANDRAIL,
4	84077980	1	SUPPORT,
5	43139	9	SCREW, Hex, M10 x 25, 8.8, Full Thd,
6	86511323	9	WASHER, M10 x 20 x 2,
7	84002212	1	BUSHING,
8	278643	1	RING, SNAP, M24, Int,
9	419176	1	RING,
10	336455	1	PLUG,
11	754891	1	SPRING,
12	84002211	1	PIN,
13	120103	1	BOLT, Hex, M8 x 16, 8.8,
14	412650	1	WASHER, Belleville, M8,
15	100016	12	NUT, M10, Cl 8,
16	140045	12	WASHER, SPRING, Belleville, M10,
17	86512446	3	BOLT, CARRIAGE, Short NK, M10 x 30, Cl8.8, Full Thd,
18	120100	2	BOLT, Hex, M6 x 20, 8.8,
19	322357	2	WASHER, SPRING, Belleville, M6,
20	9706690	4	NUT, M8, Cl 8,
21	322358	2	WASHER, SPRING, Belleville, M8,
22	86511315	12	WASHER, M8 x 16 x 1.6,
23	43128	9	BOLT, Hex, M8 x 30, 8.8,
24	86629542	1	NUT, LOCK, M8 x 1.25, Cl 8,

10.223(A 01) OPERATOR'S PLATFORM, LH - FOR LATERALE ONLY

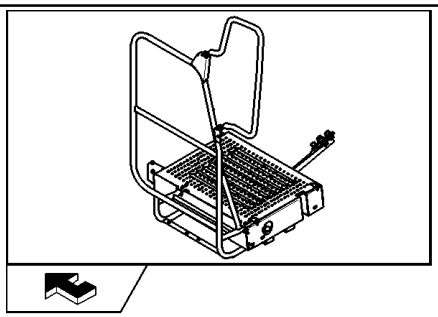

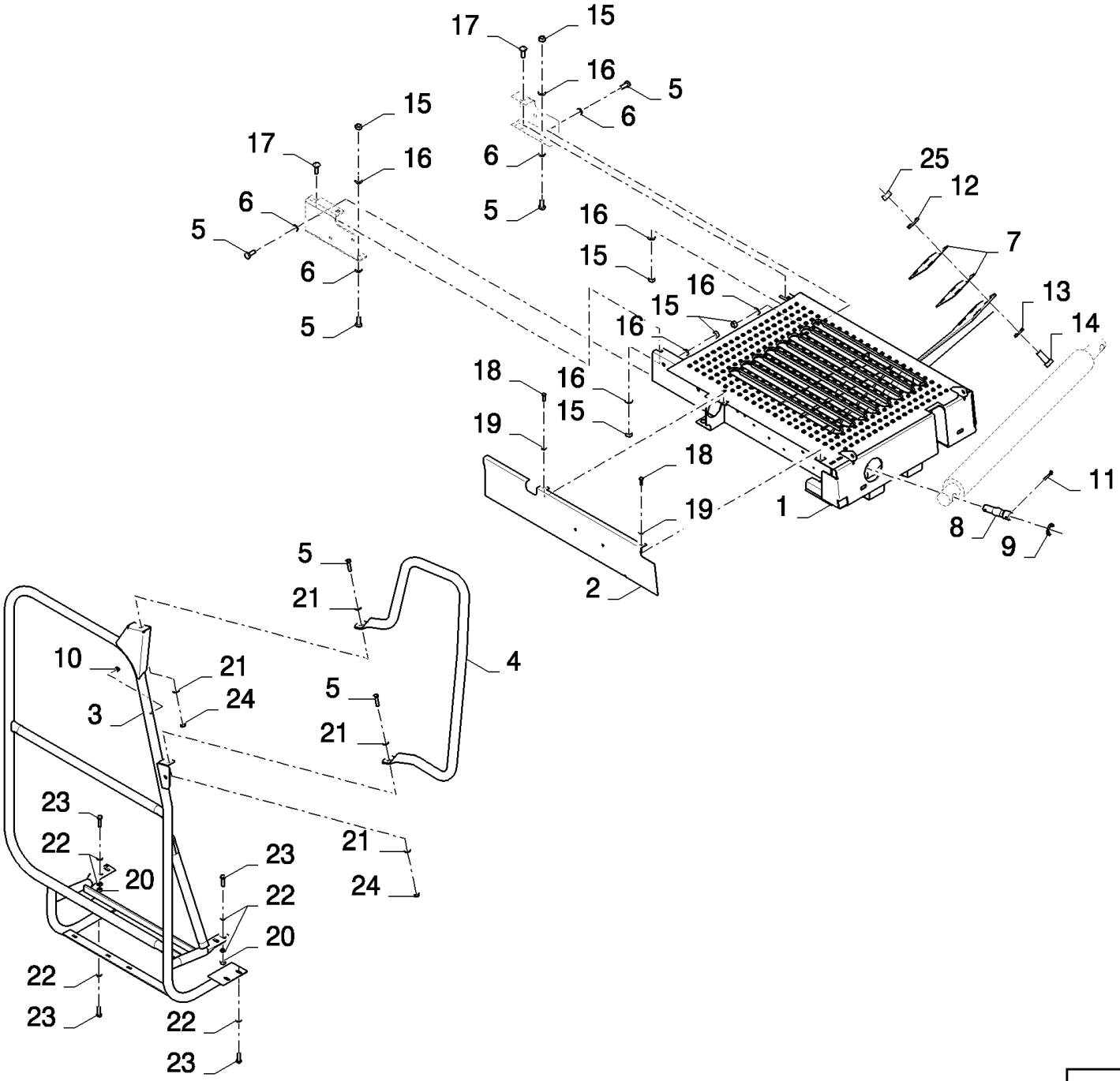

CSX7080 C659 - COMBINE (9/06-8/08)

10.223(A 01) OPERATOR'S PLATFORM, LH - FOR LATERALE ONLY

ссылка	Номер детали	Кол-во	Описание
1	87607359	1	PLATFORM,
2	84807980	1	PLATE,
3	87656413	1	RAIL, SIDE,
4	87656412	1	RAIL, SIDE,
5	43139	11	SCREW, Hex, M10 x 25, 8.8, Full Thd,
6	86511323	9	WASHER, M10 x 20 x 2,
7	87555446	2	SHIM,
8	87555444	1	PIN,
9	916107	1	WASHER,
10	336455	1	PLUG,
11	130011	2	PIN, SPLIT (COTTER), M5 x 40,
12	86589278	4	WASHER, SPRING,
13	394631	4	WASHER,
14	43168	4	BOLT, Hex, M16 x 40, 8.8,
15	100016	11	NUT, M10, Cl 8,
16	140045	11	WASHER, SPRING, Belleville, M10,
17	86512446	3	BOLT, CARRIAGE, Short NK, M10 x 30, Cl8.8, Full Thd,
18	120100	2	BOLT, Hex, M6 x 20, 8.8,
19	322357	2	WASHER, SPRING, Belleville, M6,
20	9706690	4	NUT, M8, Cl 8,
21	378244	6	WASHER, M10,
22	86511315	12	WASHER, M8 x 16 x 1.6,
23	43128	8	BOLT, Hex, M8 x 30, 8.8,
24	100037	2	NUT, M10 x 1.5, Cl 8,
25	100020	4	NUT, M16, Cl 8,

10.224(01) OPERATOR'S PLATFORM, EXTENSIONS

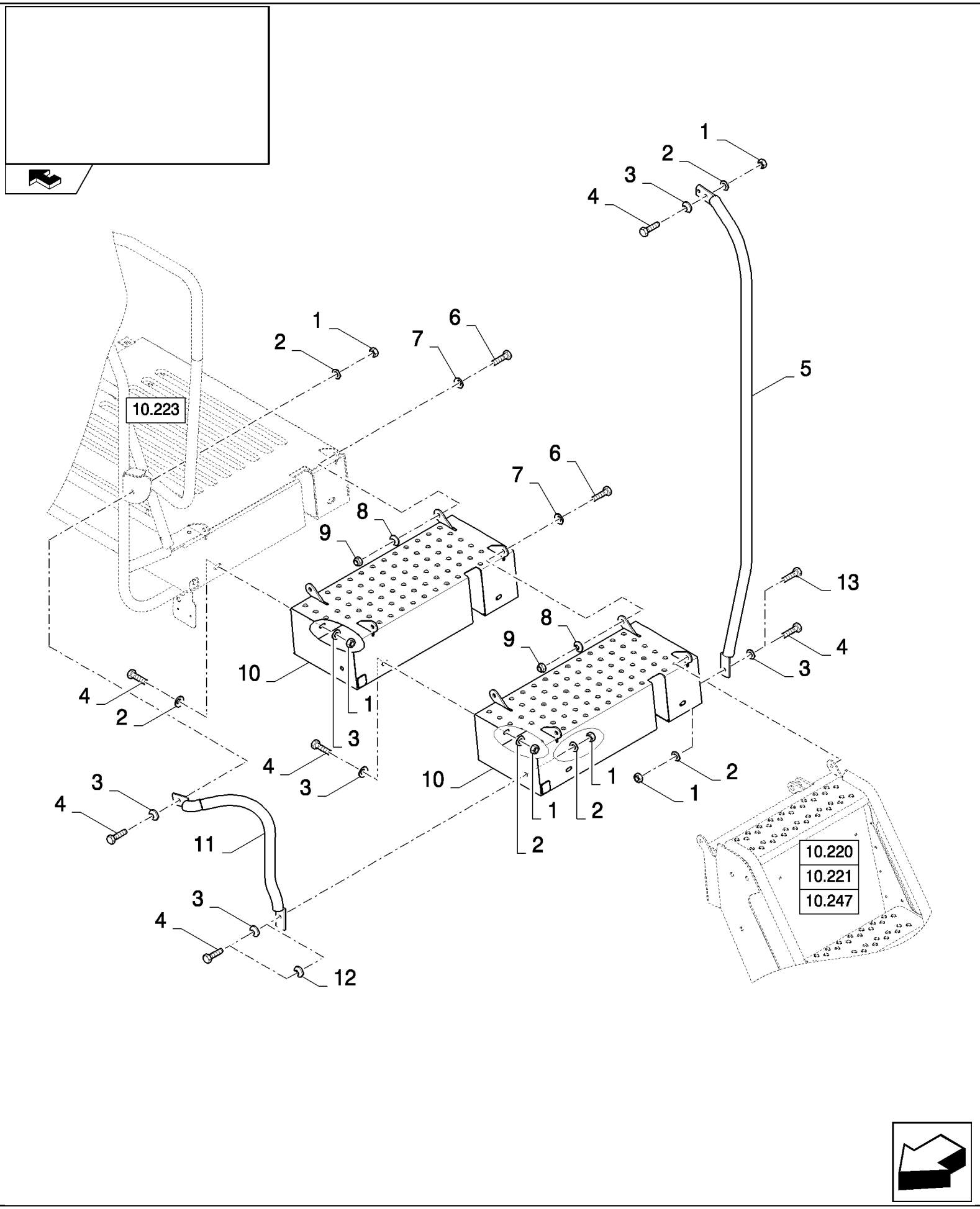

CSX7080 C659 - COMBINE (9/06-8/08)

10.224(01) OPERATOR'S PLATFORM, EXTENSIONS

ссылка	Номер детали	Кол-во	Описание
1	9706690	AR	NUT, M8, Cl 8,
2	322358	AR	WASHER, SPRING, Belleville, M8,
3	140016	AR	WASHER, M8 x 16 x 1.6,
4	43128	AR	BOLT, Hex, M8 x 30, 8.8,
5	84077985	1	HANDRAIL, , EXTENSIONS 200MM
5	84447245	1	HANDRAIL, , EXTENSIONS 400MM
6	43139	AR	SCREW, Hex, M10 x 25, 8.8, Full Thd, M10x25
7	378244	AR	WASHER, M10,
8	140045	AR	WASHER, SPRING, Belleville, M10,
9	100037	AR	NUT, M10 x 1.5, Cl 8,
10	84077653	1	EXTENSION, , EXTENSIONS 200MM
10	84077653	2	EXTENSION, , EXTENSIONS 400MM
11	84077977	1	HANDRAIL, , EXTENSIONS 200MM
11	84435910	1	HANDRAIL, , EXTENSIONS 400MM
12	86511315	5	WASHER, M8 x 16 x 1.6, , EXTENSIONS 200MM
13	43140	1	BOLT, Hex, M10 x 30, 8.8, Full Thd, , EXTENSIONS 200MM

10.224(A 01) OPERATOR'S PLATFORM, EXTENSIONS - FOR LATERALE ONLY

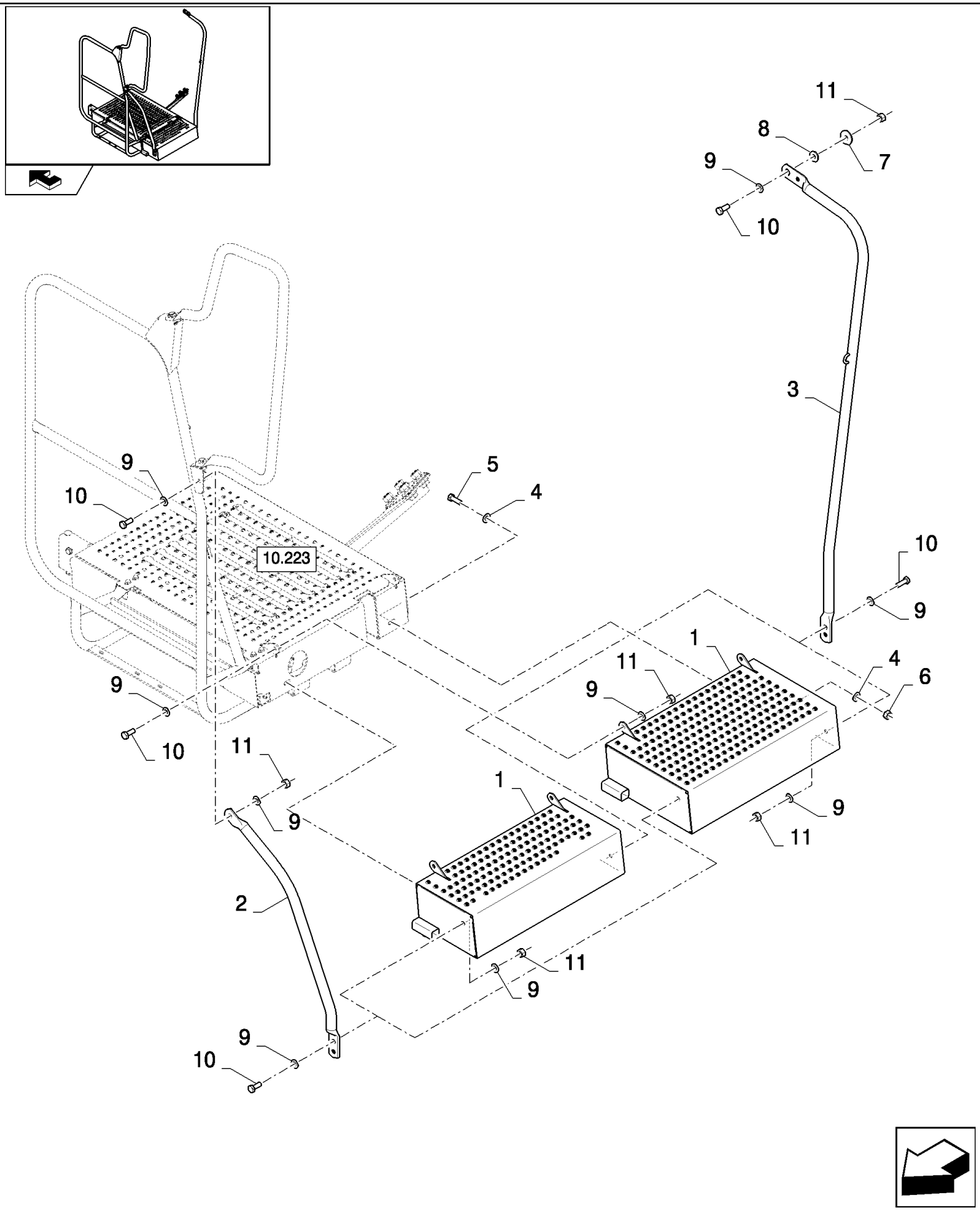

CSX7080 C659 - COMBINE (9/06-8/08)

10.224(A 01) OPERATOR'S PLATFORM, EXTENSIONS - FOR LATERALE ONLY

ссылка	Номер детали	Кол-во	Описание
1	87697090	1	EXTENSION, , EXTENSIONS 200MM
1	87721935	1	EXTENSION, , EXTENSIONS 400MM
2	87723131	1	RAIL, SIDE,
3	87723129	1	RAIL, SIDE,
4	322358	4	WASHER, SPRING, Belleville, M8,
5	43128	2	BOLT, Hex, M8 x 30, 8.8,
6	9706690	2	NUT, M8, Cl 8,
7	12644301	1	WASHER, M10 x 35 x 3,
8	12626201	1	WASHER, M10 x 25 x 3,
9	120045	13	BOLT, CARRIAGE, Short NK, M12 x 60, Cl8.8,
10	43139	7	SCREW, Hex, M10 x 25, 8.8, Full Thd,
11	100016	7	NUT, M10, Cl 8,

10.225(01) REAR PANEL

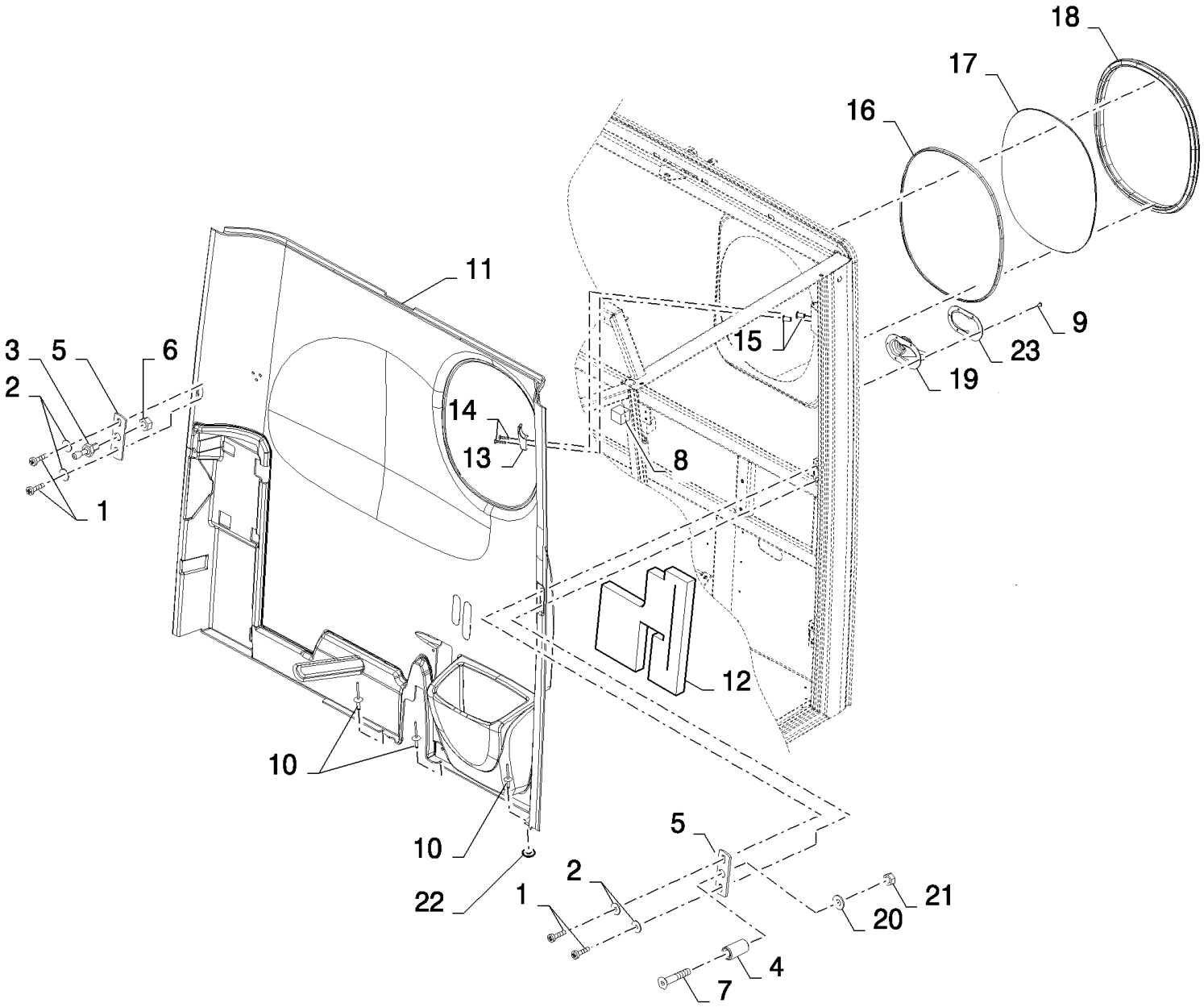

CSX7080 C659 - COMBINE (9/06-8/08)

10.225(01) REAR PANEL

ссылка	Номер детали	Кол-во	Описание
1	84007540	4	SCREW, M4x25
2	84007539	4	WASHER, 6MM
3	89992995	1	PIN, SPLIT (COTTER),
4	84076428	1	STOP,
5	84431859	2	BRACKET,
6	100016	1	NUT, M10, Cl 8,
7	84320291	1	SCREW, Hex Soc Flat Hd, M8 x 45, 8.8,
8	84790367	2	SOFT TRIM,
9	425520	1	RIVET, RIVET
10	9512290	3	RIVET, Rivet
11	84814586	1	SOFT TRIM,
12	84814200	1	STRIP, SEALING,
13	86520824	1	CLOTHING, HANGER,
14	86511824	2	SCREW, Cross Pan Hd, M4 x 20,
15	84814233	2	FASTENER,
16	401211	1	SEAL PROTECTION, L=1.65M
17	84400392	1	GLASS, CAB,
18	89819562	1	SEAL, L=1.65M
19	84442338	1	SEAL PROTECTION,
20	322358	1	WASHER, SPRING, Belleville, M8,
21	9706690	1	NUT, M8, Cl 8,
22	9824326	3	WASHER, M5, 5MM
23	84442343	1	PLATE, FIXING,

10.226(01) CAB FLOOR

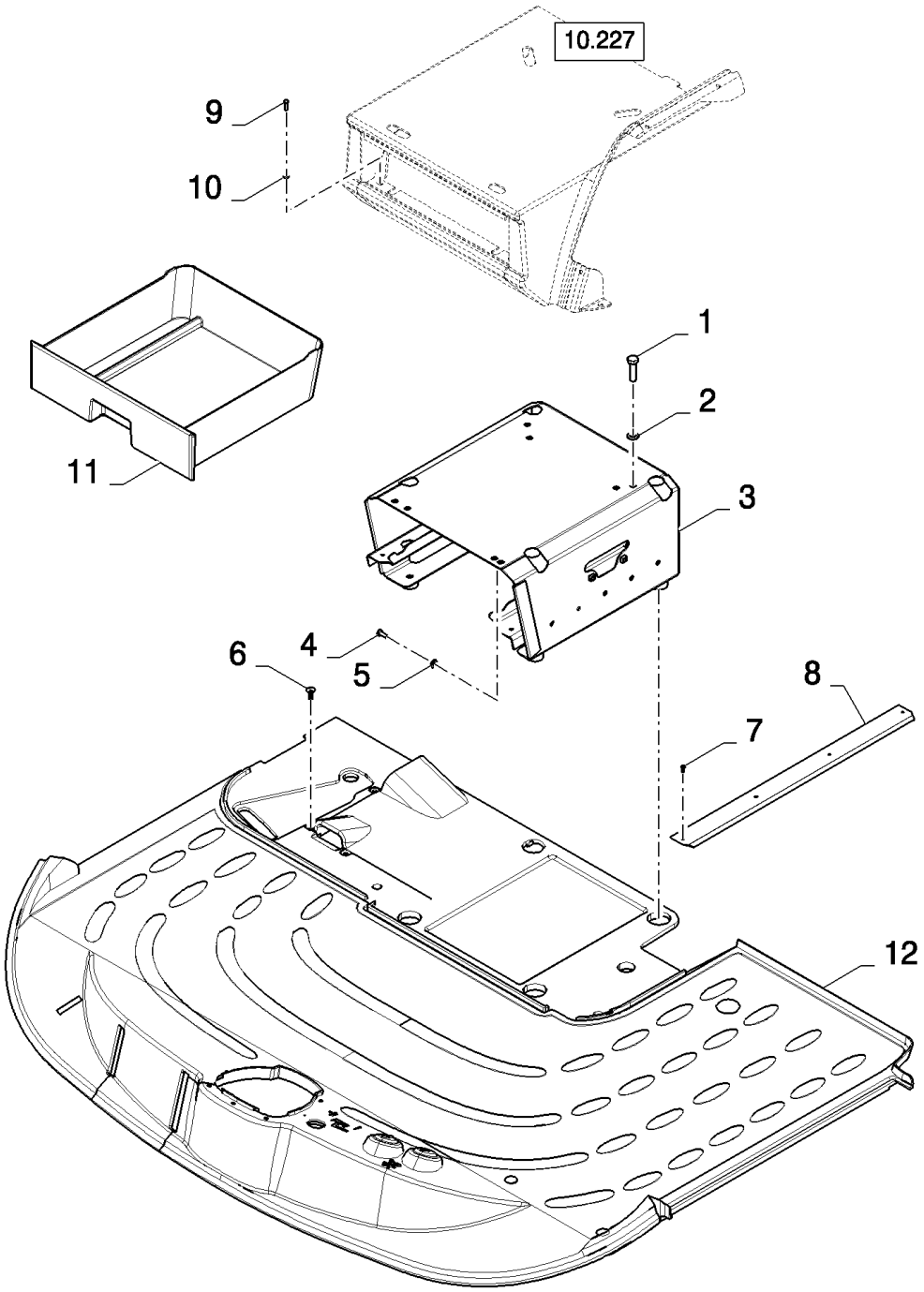

CSX7080 C659 - COMBINE (9/06-8/08)

10.226(01) CAB FLOOR

ссылка	Номер детали	Кол-во	Описание
1	120112	4	BOLT, Hex, M10 x 40, 8.8, Full Thd,
2	86511323	4	WASHER, M10 x 20 x 2,
3	87326672	1	SUPPORT,
4	86508568	2	SCREW, Hex, M6 x 16, 8.8,
5	322357	2	WASHER, SPRING, Belleville, M6,
6	87343499	4	PIN, CLEVIS,
7	425520	4	RIVET,
8	84001240	1	PLATE, COVER,
9	412064	2	SCREW, Hex, M4 x 16, 8.8, Full Thd, BOLT, Hex, M4 x 16, 8.8, Full Thd
10	140013	2	WASHER, M4,
11	87281323	1	HOLDER,
12	87357847	1	MAT, FLOOR, , BSN C599
12	87662848	1	MAT, FLOOR, , ASN D600

10.227(01) REAR PANEL, LOWER

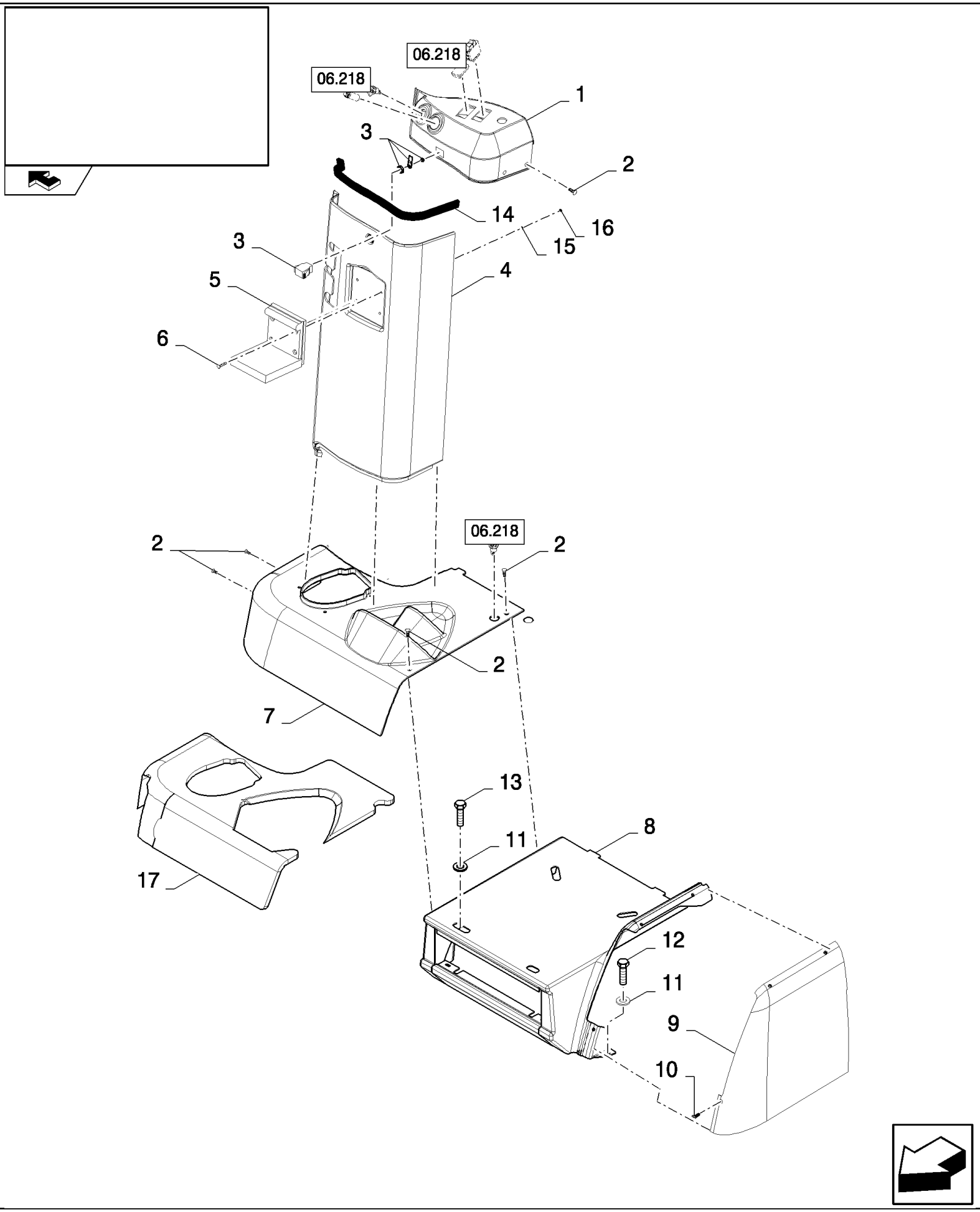

CSX7080 C659 - COMBINE (9/06-8/08)

10.227(01) REAR PANEL, LOWER

ссылка	Номер детали	Кол-во	Описание
1	84320411	1	COVER,
2	9844205	4	SCREW,
3	84607181	1	LOCK,
4	87374613	1	CONSOLE,
5	9819041	1	CLAMP,
6	43646	4	SCREW, Hex Flat Hd, M4 x 20, 4.8, M4x20
7	87357904	1	CONSOLE,
8	87325608	1	CONSOLE,
9	84431120	1	CONSOLE,
10	9835804	3	SCREW, , BSN C551
10	9844205	3	SCREW, , ASN D552
11	86511315	2	WASHER, M8 x 16 x 1.6,
12	120104	1	SCREW, Hex, M8 x 20, 8.8,
13	412479	2	BOLT, Hex, M8 x 35, 8.8,
14	402295	1	GASKET, L=0.4M
15	322355	4	WASHER, Belleville, M4,
16	100012	4	NUT, M4, Cl 8,
17	84817294	1	SEAL,

10.228(01) CAB FRAME

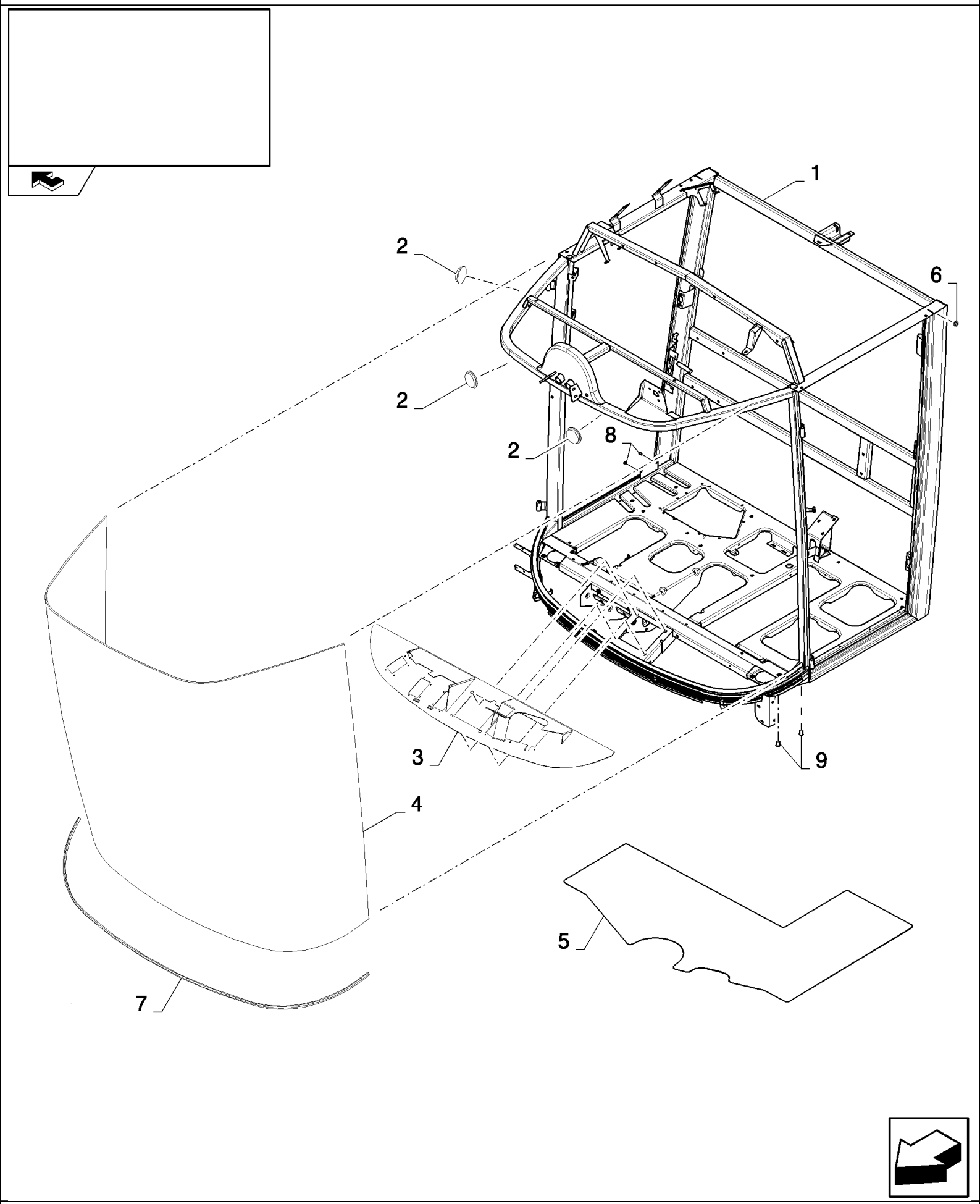

CSX7080 C659 - COMBINE (9/06-8/08)

10.228(01) CAB FRAME

ссылка	Номер детали	Кол-во	Описание
1	84989340	1	FRAME,
2	9992359	4	PLUG,
3	84435576	1	PLATE,
4	84400385	1	GLASS,
5	84448101	1	PROTECTION PLATE,
6	80433244	1	PLUG,
7	84460900	1	SEAL PROTECTION, L=0.36M
8	84814233	2	FASTENER,
9	353068	4	NUT,

10.229(01) CAB FRAME

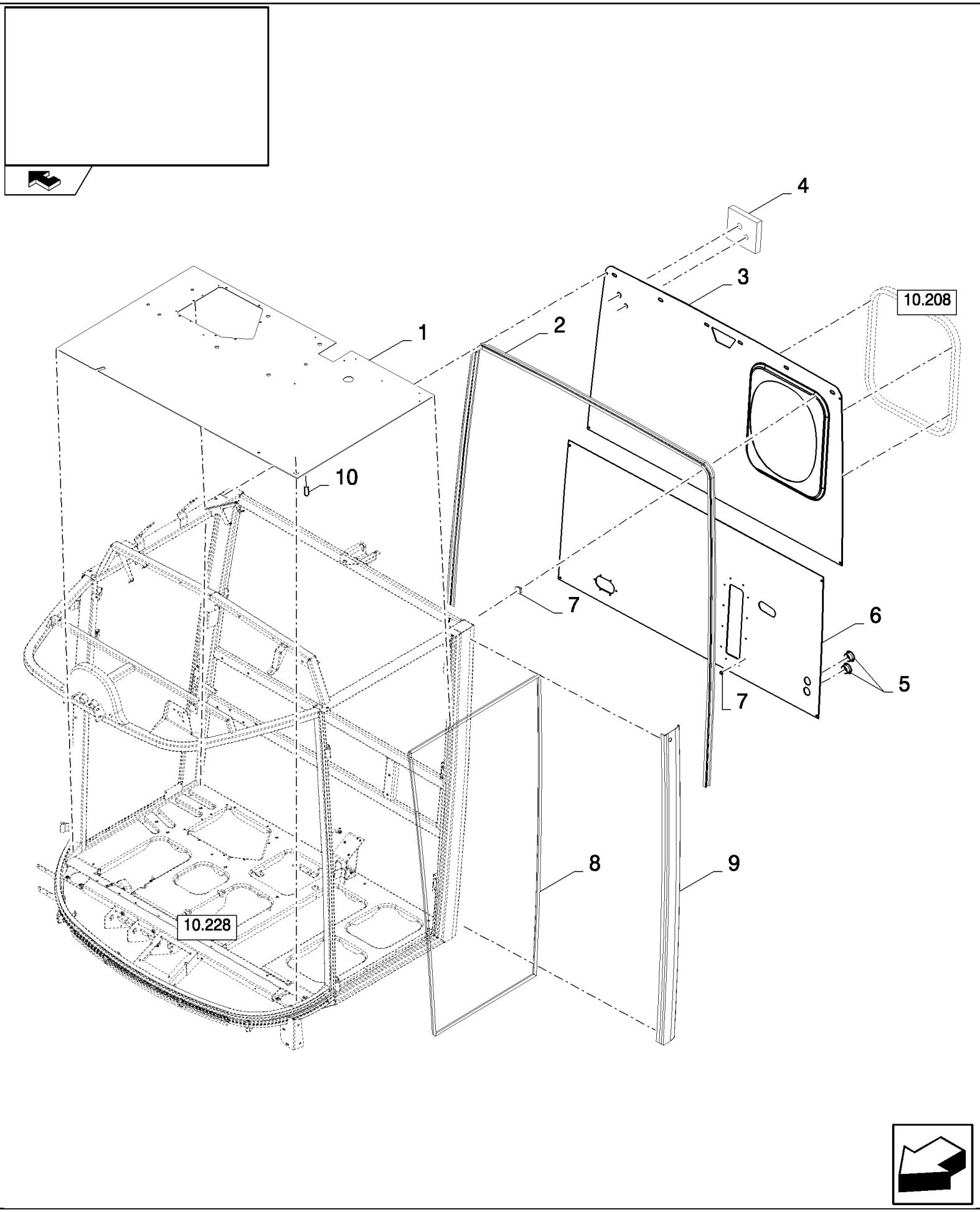

CSX7080 C659 - COMBINE (9/06-8/08)

10.229(01) CAB FRAME

ссылка	Номер детали	Кол-во	Описание
1	84433701	1	PLATE,
2	9504994	1	L=4.42M
3	84443491	1	PLATE,
4	84814573	1	SOFT TRIM,
5	439552	2	PLUG, L=2M
6	84443490	1	PLATE,
7	9818501	24	PLUG, Sq, Plastic,
8	9850032	1	SEAL, RUBBER, L=4.3M
9	NS	1	NOT SERVICED,
10	87282347	1	INSERT, THREADED,

10.230(01) CAB FRAME

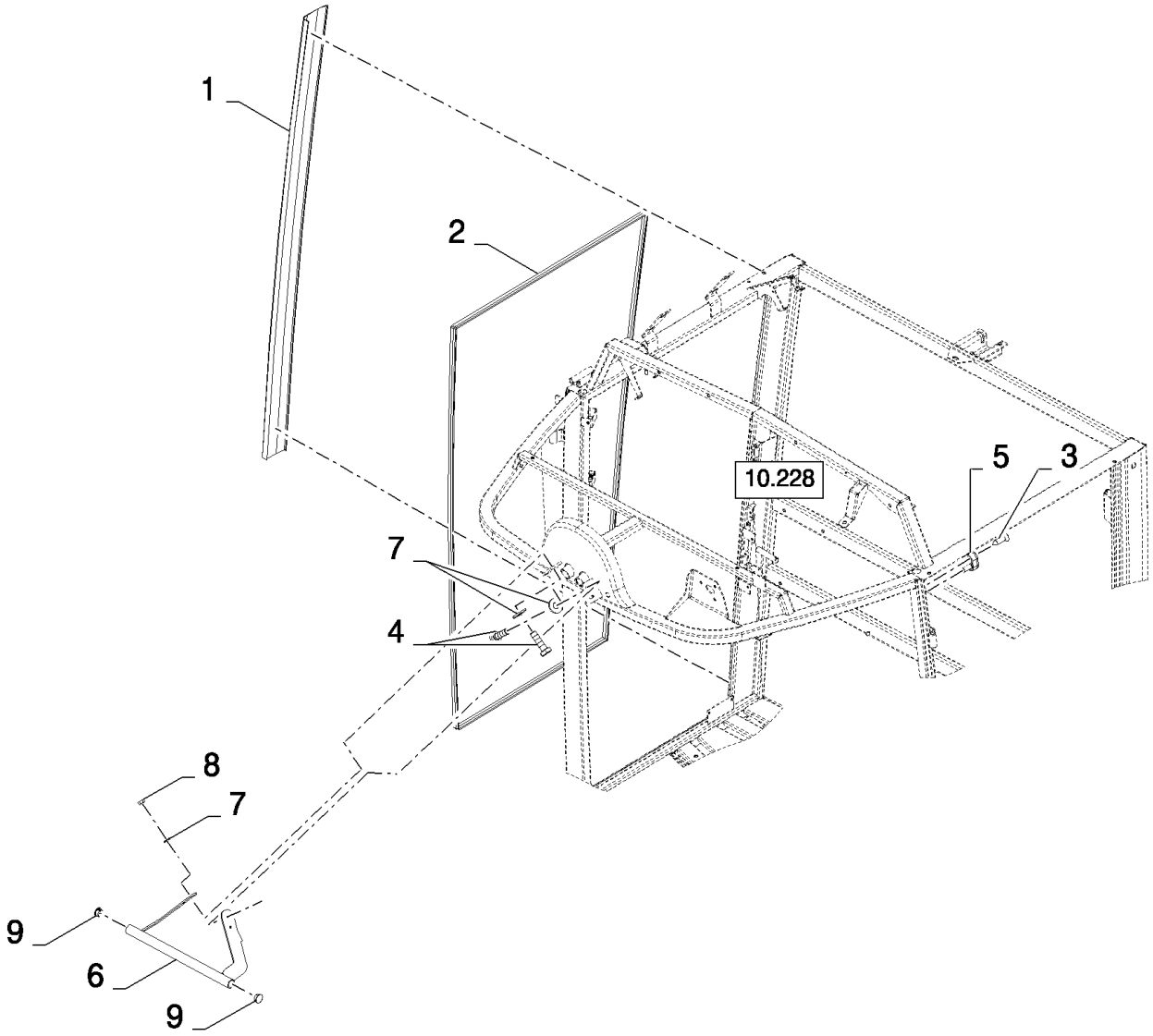

CSX7080 C659 - COMBINE (9/06-8/08)

10.230(01) CAB FRAME

ссылка	Номер детали	Кол-во	Описание
1	NS	1	NOT SERVICED,
2	9850032	1	SEAL, RUBBER, L=4.3M
3	9835804	1	SCREW,
4	86977786	4	BOLT, Hex, M6 x 25, 8.8, M6x20, BSN C615
5	89990447	1	SWITCH,
6	87315421	1	SUPPORT, , BSN C615
7	89824259	8	WASHER, , BSN C615
8	89706755	4	NUT, , BSN C615
9	84989341	2	PLUG, , BSN C615

10.231(01) RAIL WITHOUT EXTENSION

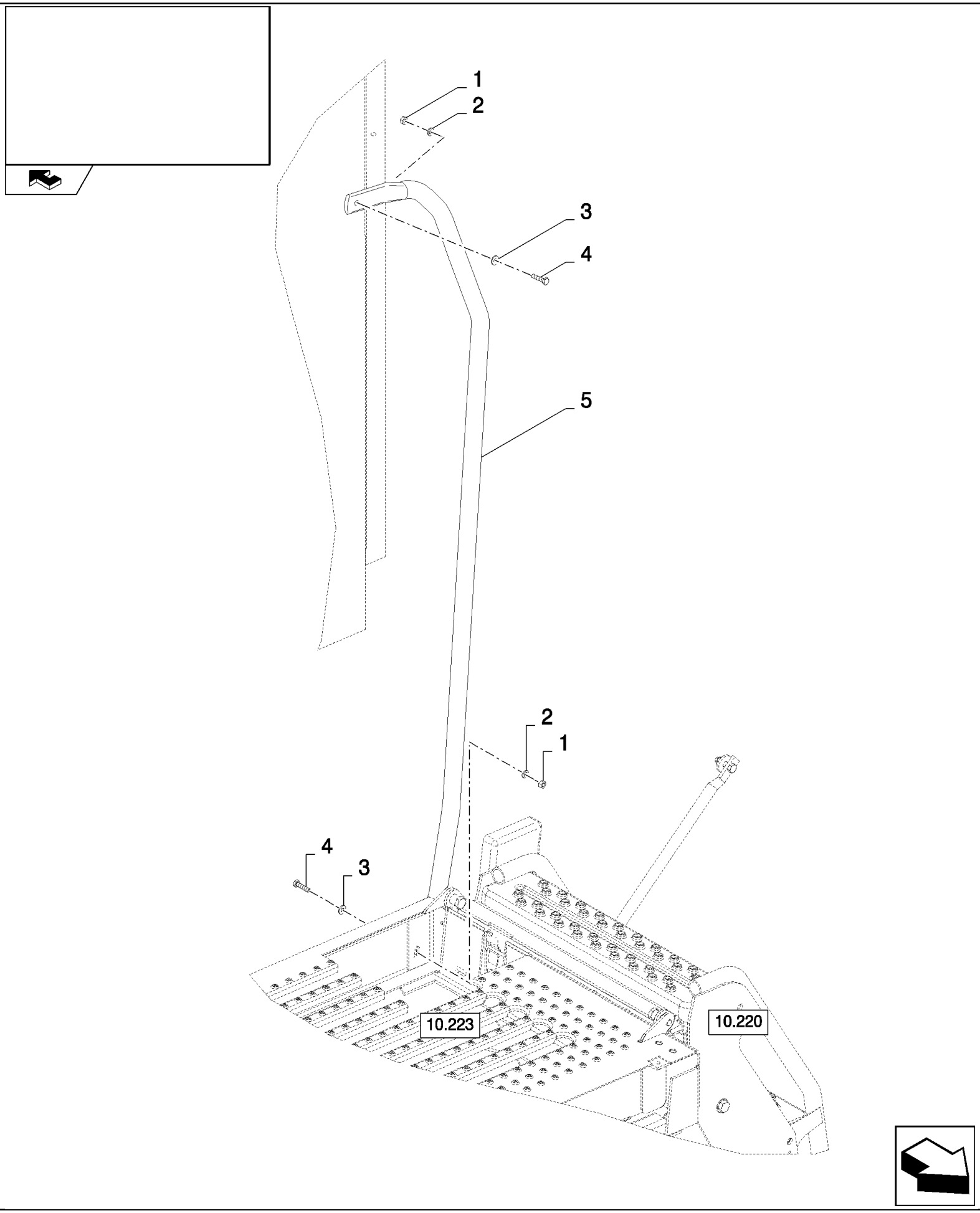

CSX7080 C659 - COMBINE (9/06-8/08)

10.231(01) RAIL WITHOUT EXTENSION

ссылка	Номер детали	Кол-во	Описание
1	9706755	2	NUT, M6, Cl 8,
2	86588499	2	WASHER, M6 x 12 x 1.6, 6MM
3	322357	2	WASHER, SPRING, Belleville, M6,
4	86977786	2	BOLT, Hex, M6 x 25, 8.8,
5	84444204	1	TUBE,

10.232(01) DOOR, RH

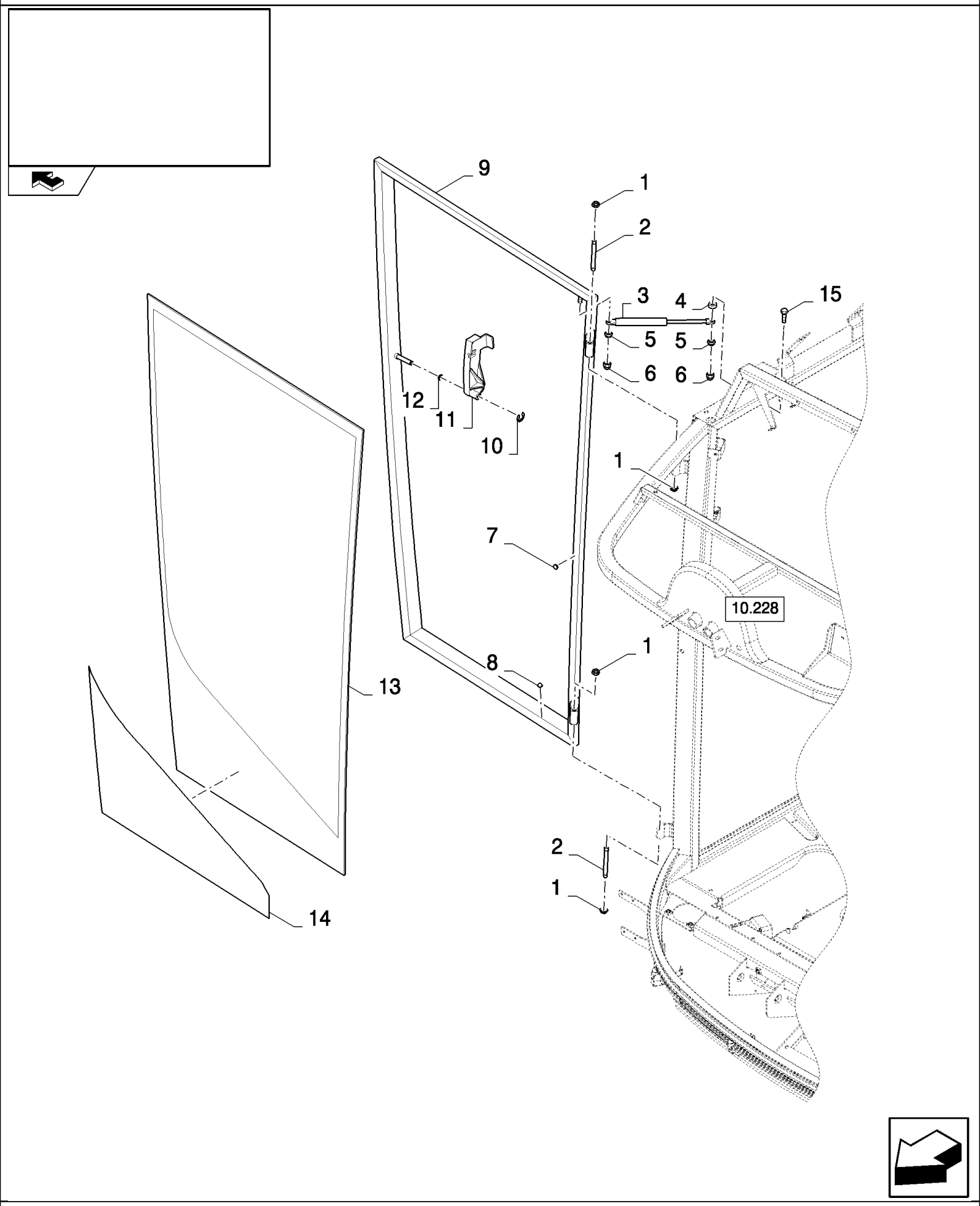

CSX7080 C659 - COMBINE (9/06-8/08)

10.232(01) DOOR, RH

ссылка	Номер детали	Кол-во	Описание
1	431021	4	WASHER, SPECIAL,
2	84607358	2	PIN,
3	89594808	1	GAS STRUT,
4	350240	1	WASHER, 9MM
5	86629542	2	NUT, LOCK, M8 x 1.25, Cl 8,
6	458639	2	CAP, Nut, M8,
7	9992358	8	ELASTIC STOP, 3.5MM
8	9818501	2	PLUG, Sq, Plastic, 4.8MM
9	84073224	1	DOOR,
10	89992582	1	CIRCLIP,
11	89992366	1	HANDLE,
12	89992578	1	O-RING,
13	740854	1	GLASS, CAB,
14	84429737	1	DECAL,
15	9812123	1	RING,

10.233(01) DOOR, LH

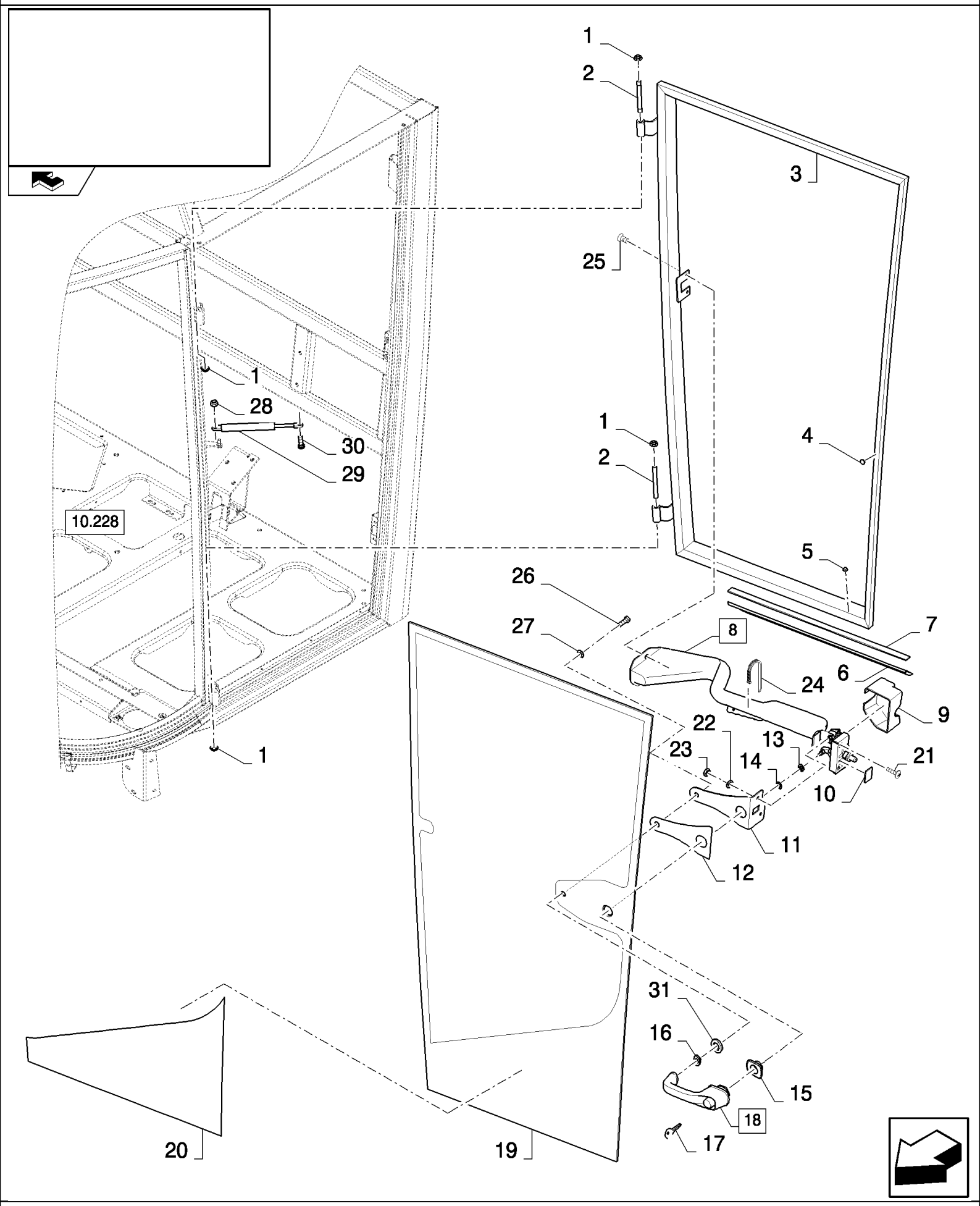

CSX7080 C659 - COMBINE (9/06-8/08)

10.233(01) DOOR, LH

ссылка	Номер детали	Кол-во	Описание
1	431021	4	WASHER, SPECIAL,
2	84607358	2	PIN,
3	84073228	1	DOOR,
4	9992358	8	ELASTIC STOP, 3.5MM
5	9818501	2	PLUG, Sq, Plastic, 4.8MM
6	84807851	1	PLATE,
7	NS	2	NOT SERVICED, L=1.4M
8	84989910	1	HANDLE, (9,10)
9	NSS	1	NOT SERVICED SEPARATELY,
10	NSS	1	NOT SERVICED SEPARATELY,
11	84819764	1	PLATE,
12	84819765	1	SEAL, RUBBER,
13	NSS	1	NOT SERVICED SEPARATELY,
14	NSS	1	NOT SERVICED SEPARATELY,
15	9513968	1	GASKET,
16	9513969	1	GASKET,
17	NSS	1	NOT SERVICED SEPARATELY,
18	9513970	1	HANDLE, (13,14,17)
19	84819792	1	GLASS,
20	84429738	1	DECAL,
21	300352	2	SCREW, Hex Flat Hd, M8 x 40, 4.8,
22	322358	2	WASHER, SPRING, Belleville, M8,
23	9706690	2	NUT, M8, Cl 8,
24	747159	1	CLAMP,
25	86511828	2	SCREW, Cross Pan Hd, M6 x 12,
26	NS	2	NOT SERVICED,
26	43117	1	BOLT, Hex, M6 x 30, 8.8,
27	NS	2	NOT SERVICED,
27	322357	1	WASHER, SPRING, Belleville, M6,
28	353308	1	NUT, M6 x 1, Cl 8,
29	89594808	1	GAS STRUT,
30	86511829	1	SCREW, Cross Pan Hd, M6 x 16,
31	264036	1	BUSHING,

10.234(01) SCREEN WASHER FOR FRONT WINDOW

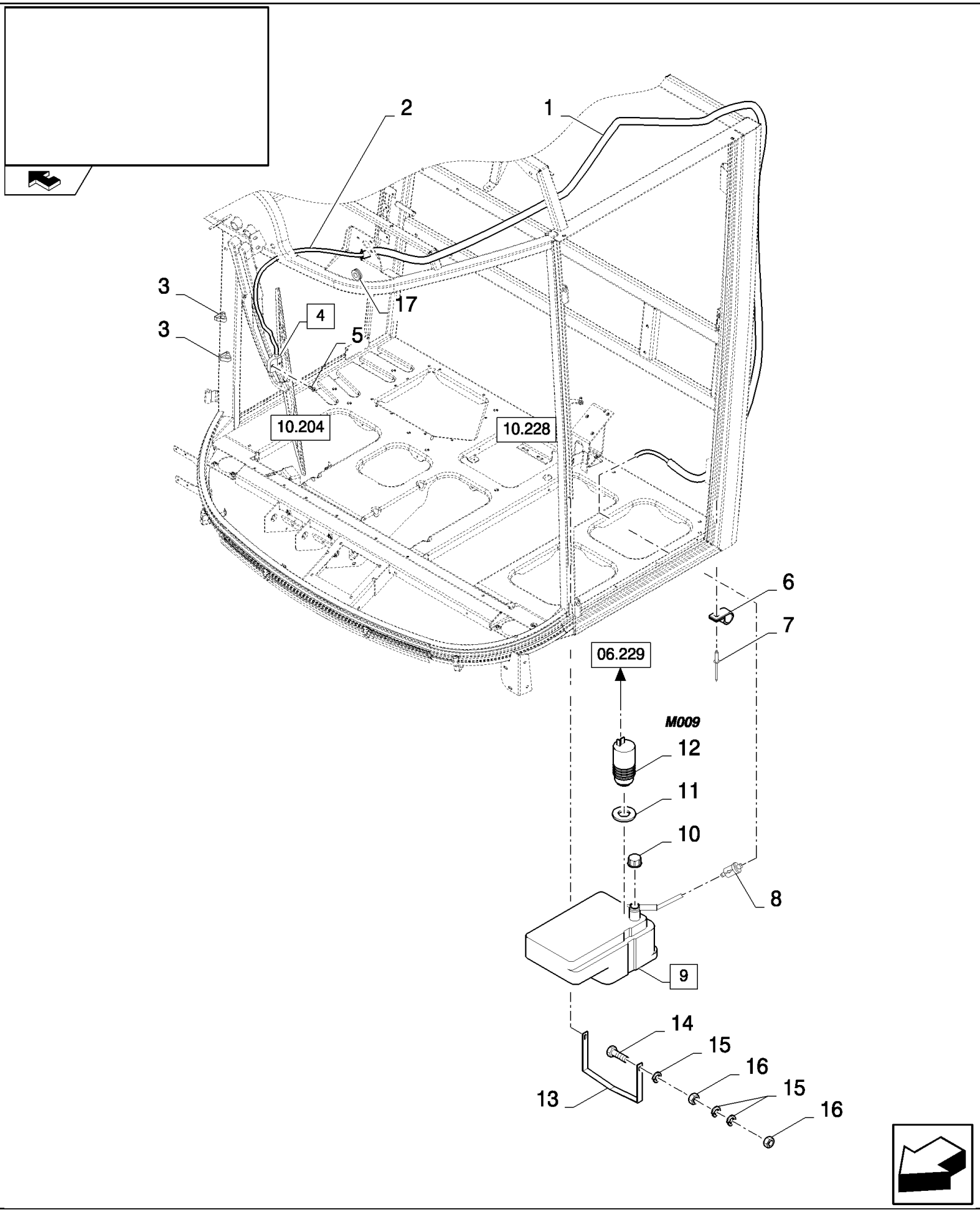

CSX7080 C659 - COMBINE (9/06-8/08)

10.234(01) SCREEN WASHER FOR FRONT WINDOW

ссылка	Номер детали	Кол-во	Описание
1	9507813	AR	L=3.3M
2	84037518	AR	HOSE, L=6M
3	84442498	4	CLIP,
4	84442497	1	NOZZLE, (5)
5	NSS	1	NOT SERVICED SEPARATELY,
6	84818443	2	CLAMP,
7	9512968	2	RIVET, Rivet
8	84037530	1	VALVE, CHECK,
9	84002498	1	RESERVOIR, WINDSH. WASH, (10 to 12)
10	84041004	1	CAP,
11	84037531	1	SEAL,
12	84037533	1	PUMP,
13	84002499	1	CLAMP,
14	86977786	2	BOLT, Hex, M6 x 25, 8.8,
15	322357	6	WASHER, SPRING, Belleville, M6,
16	9706755	4	NUT, M6, Cl 8,
17	46288	1	GROMMET,

10.235(01) AIR CONDITIONER

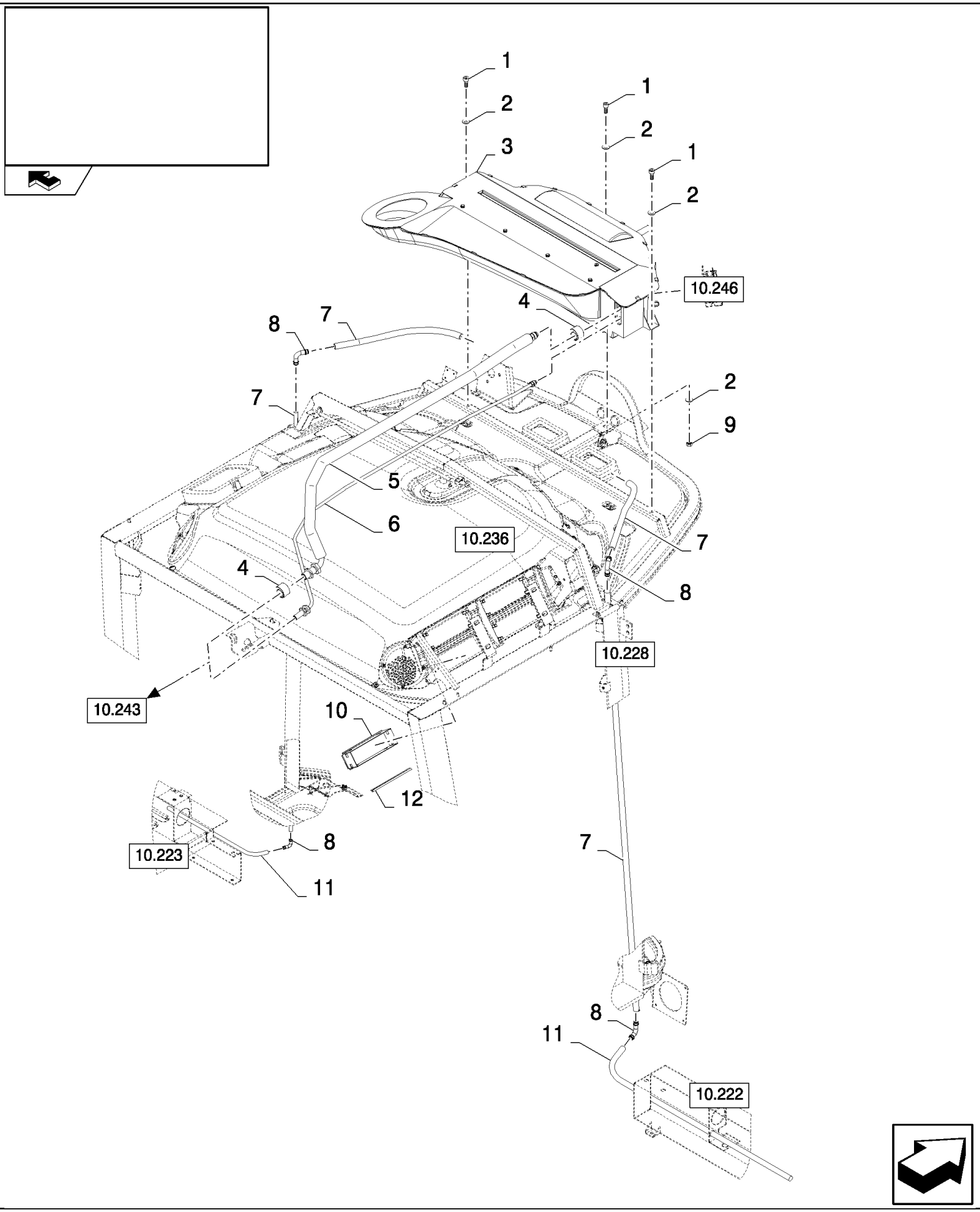

CSX7080 C659 - COMBINE (9/06-8/08)

10.235(01) AIR CONDITIONER

ссылка	Номер детали	Кол-во	Описание
1	84012852	3	SCREW, Hex Soc Hd, M8 x 16, 8.8, M8x16
2	86511315	4	WASHER, M8 x 16 x 1.6,
3	84100128	1	AIR CONDITIONER,
4	84320230	2	TAPE, ADHESIVE, L=0.5M
5	84320643	1	TUBE,
6	84320642	1	TUBE,
7	84814472	2	HOSE, FLEXIBLE, L=4.015M
8	9513786	4	ELBOW,
9	9706690	1	NUT, M8, Cl 8,
10	87371969	1	SLEEVE,
11	84814601	2	DUCT,
12	400987	1	SEAL, L=0.35M

10.236(01) CAB ROOF, INNER

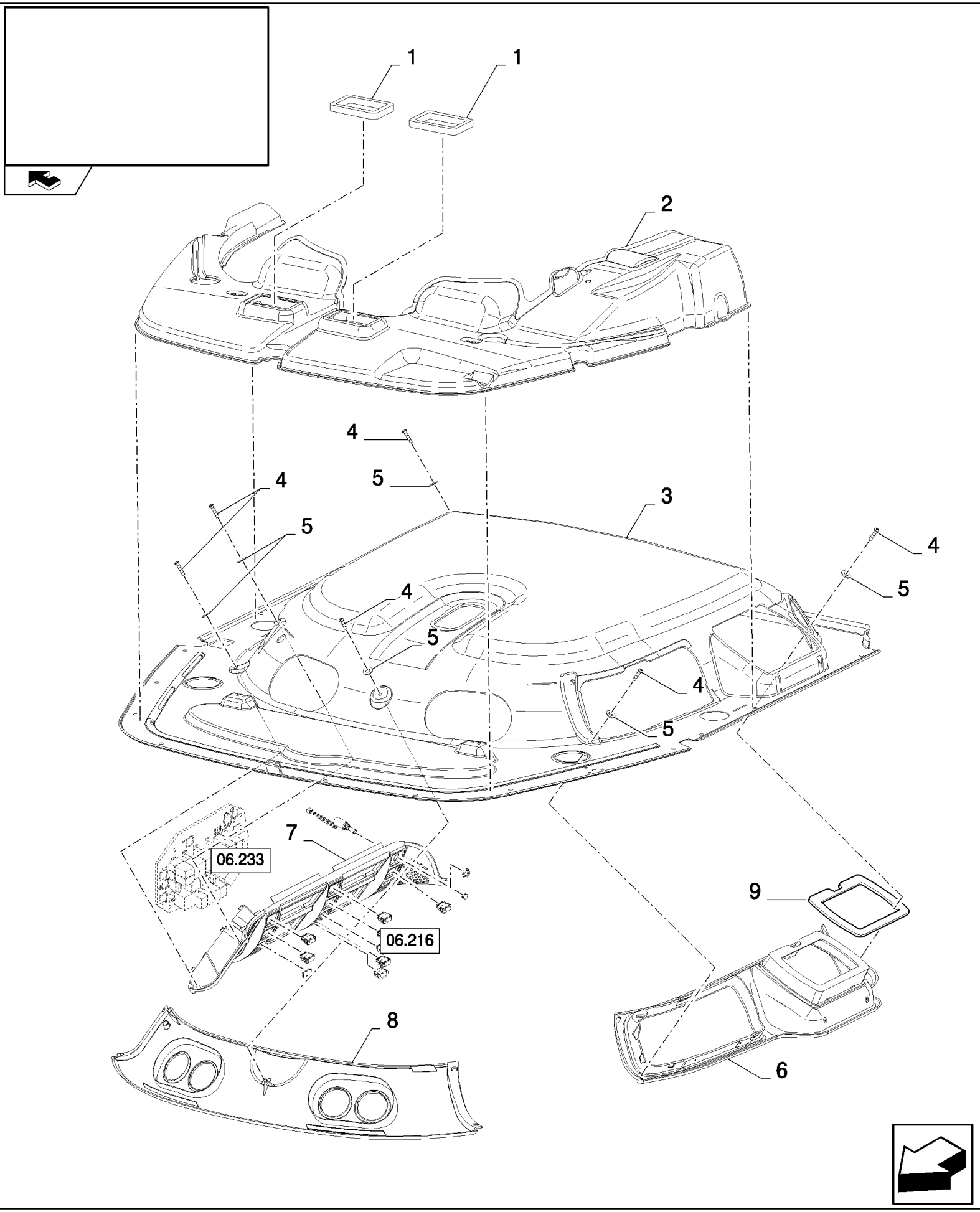

CSX7080 C659 - COMBINE (9/06-8/08)

10.236(01) CAB ROOF, INNER

ссылка	Номер детали	Кол-во	Описание
1	84817296	2	SEAL,
2	84814239	1	SOFT TRIM,
3	84814238	1	SOFT TRIM,
4	9514970	7	SCREW,
5	80707	7	WASHER, 3/16",
6	84454642	1	SOFT TRIM,
7	84454643	1	SOFT TRIM,
8	84320405	1	SOFT TRIM,
9	NS	1	NOT SERVICED,

10.237(01) CAB ROOF, INNER

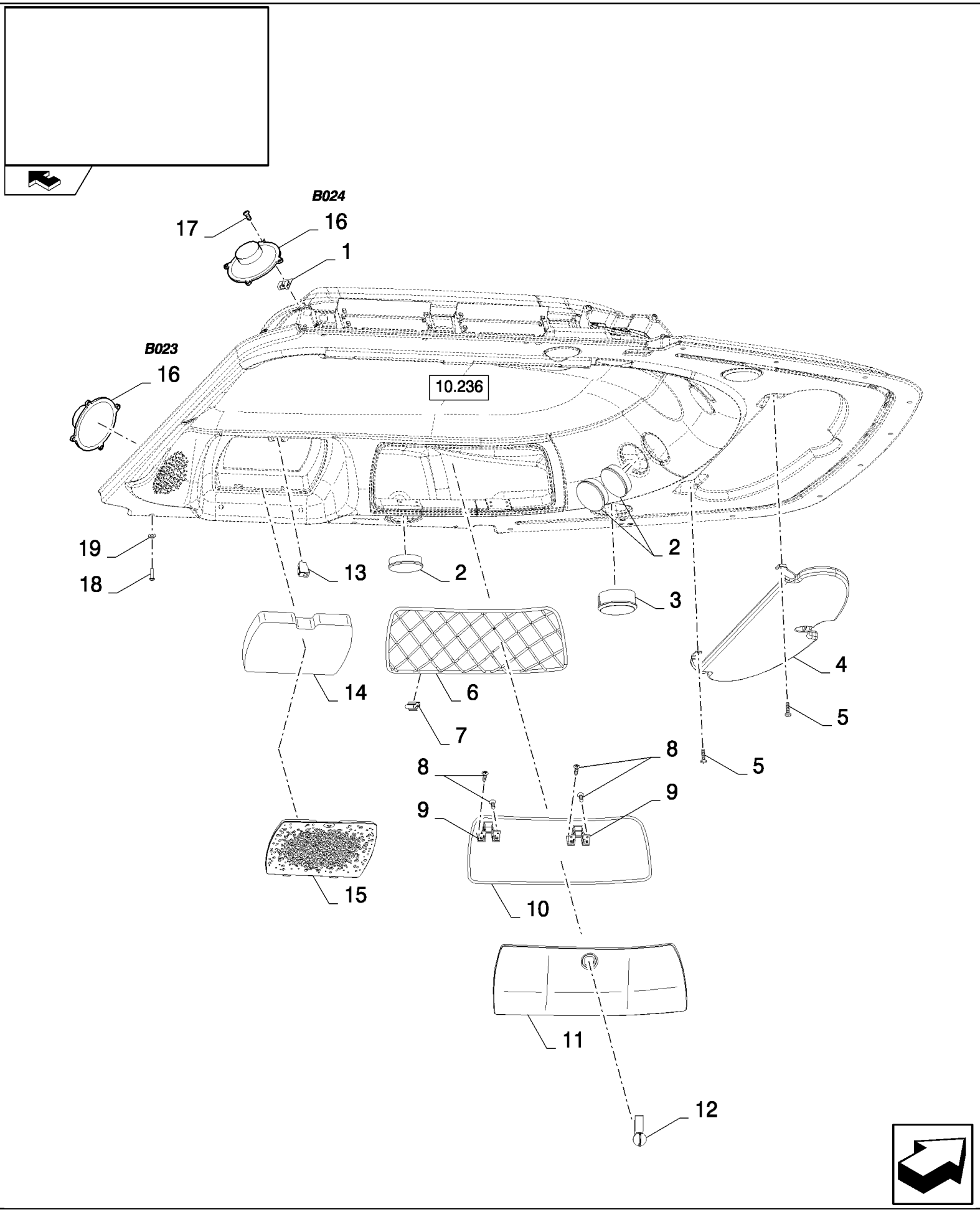

CSX7080 C659 - COMBINE (9/06-8/08)

10.237(01) CAB ROOF, INNER

ссылка	Номер детали	Кол-во	Описание
1	84005699	8	CLIP,
2	84100244	3	DUCT, AIR,
3	84400419	1	DUCT, AIR,
4	84320403	1	SUN VISOR,
5	86511042	4	SCREW, Cross Pan Hd, M4 x 16,
6	84607154	1	MESH,
7	84807656	8	CLIP,
8	9835804	16	SCREW,
9	84607018	2	HINGE,
10	84814236	1	SEAL,
11	84320408	1	COVER,
12	84607181	1	LOCK,
13	84400156	1	FASTENER,
14	84607214	1	FILTER, CAB,
15	84431119	1	GRILLE,
16	82014952	2	SPEAKER,
17	9514970	8	SCREW,
18	84073086	2	SCREW,
19	86639315	2	WASHER,

10.238(01) CAB ROOF, INNER

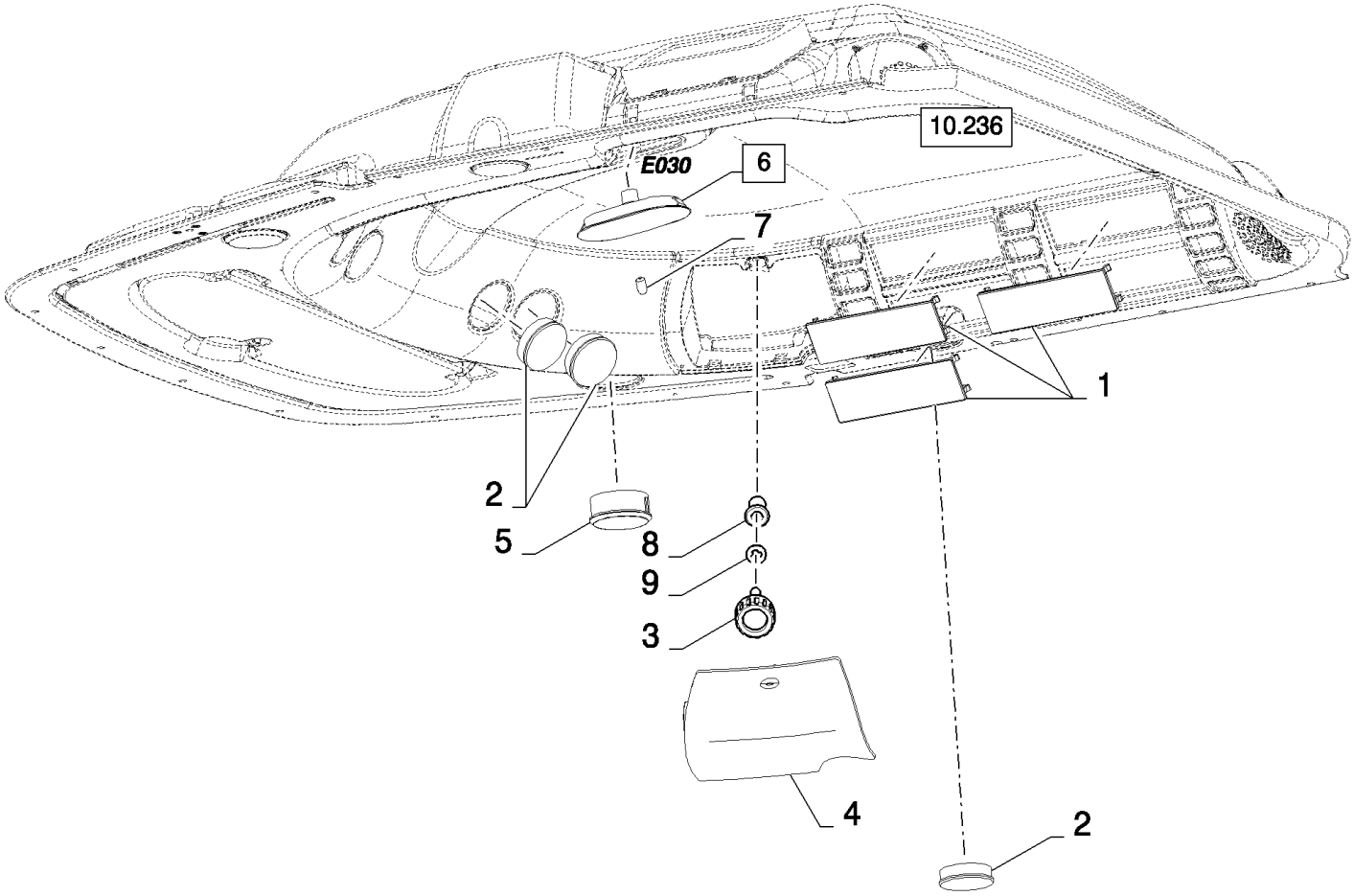

CSX7080 C659 - COMBINE (9/06-8/08)

10.238(01) CAB ROOF, INNER

ссылка	Номер детали	Кол-во	Описание
1	81868985	3	PLATE,
2	84100244	3	DUCT, AIR,
3	84454616	1	KNOB,
4	84454665	1	COVER,
5	84400419	1	DUCT, AIR,
6	84057991	1	LIGHT, INTERIOR, (7)
7	86616249	1	BULB,
8	84814233	1	FASTENER,
9	84454615	1	RING,

10.239(01) CAB ROOF, OUTER

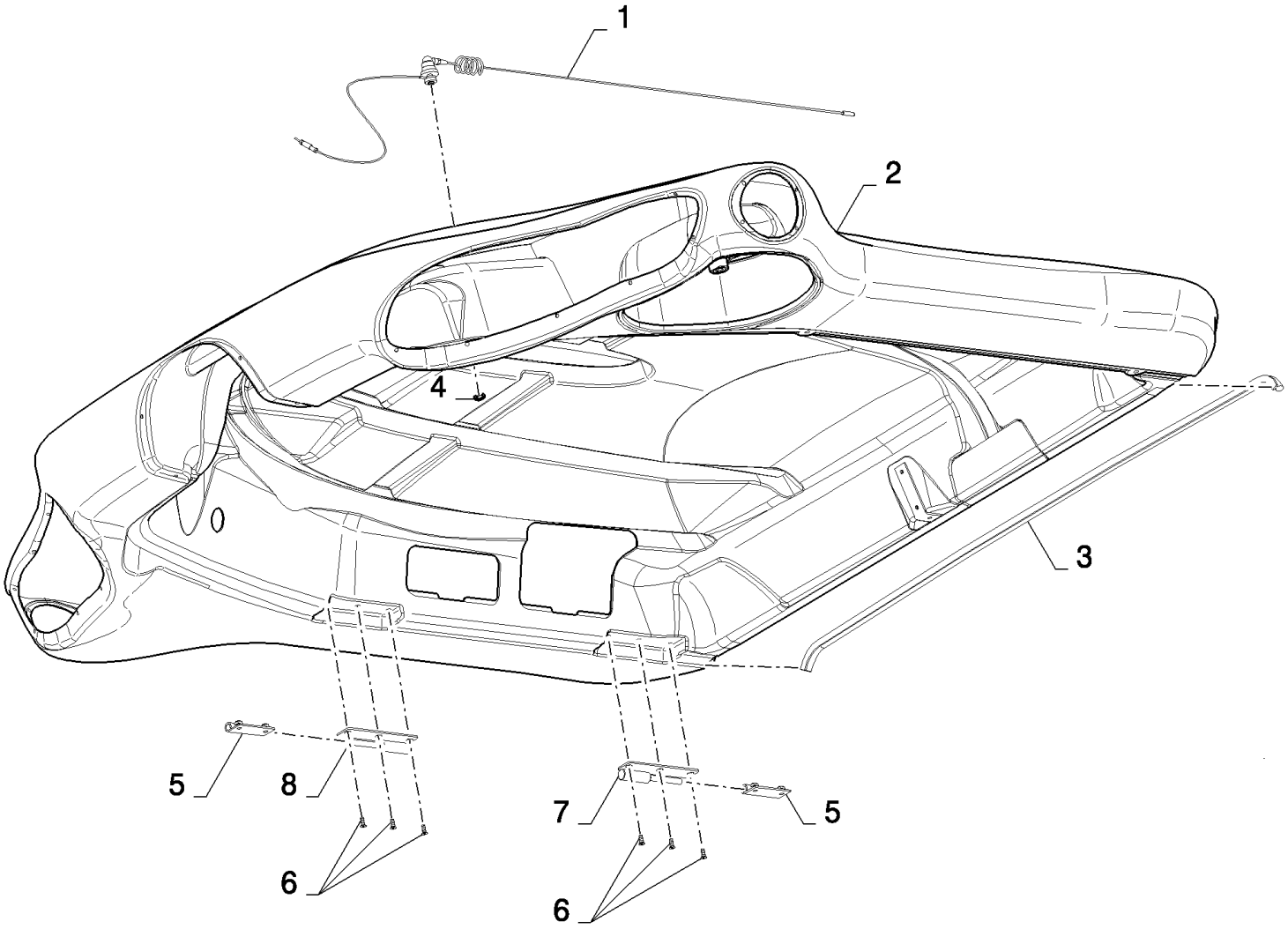

CSX7080 C659 - COMBINE (9/06-8/08)

10.239(01) CAB ROOF, OUTER

ссылка	Номер детали	Кол-во	Описание
1	84026763	1	ANTENNA, , BSN C607
1	9846820	1	ANTENNA, , ASN D608
2	84814286	1	ROOF,
3	84607251	1	WEATHERSTRIP, RUBBER, L:1.42M
4	84002421	1	WASHER,
5	84075984	2	HINGE,
6	300580	6	SCREW, Hex Flat Hd, M6 x 16, 4.8, M6x16
7	84075994	1	HINGE,
8	84075963	1	

10.240(01) CAB ROOF

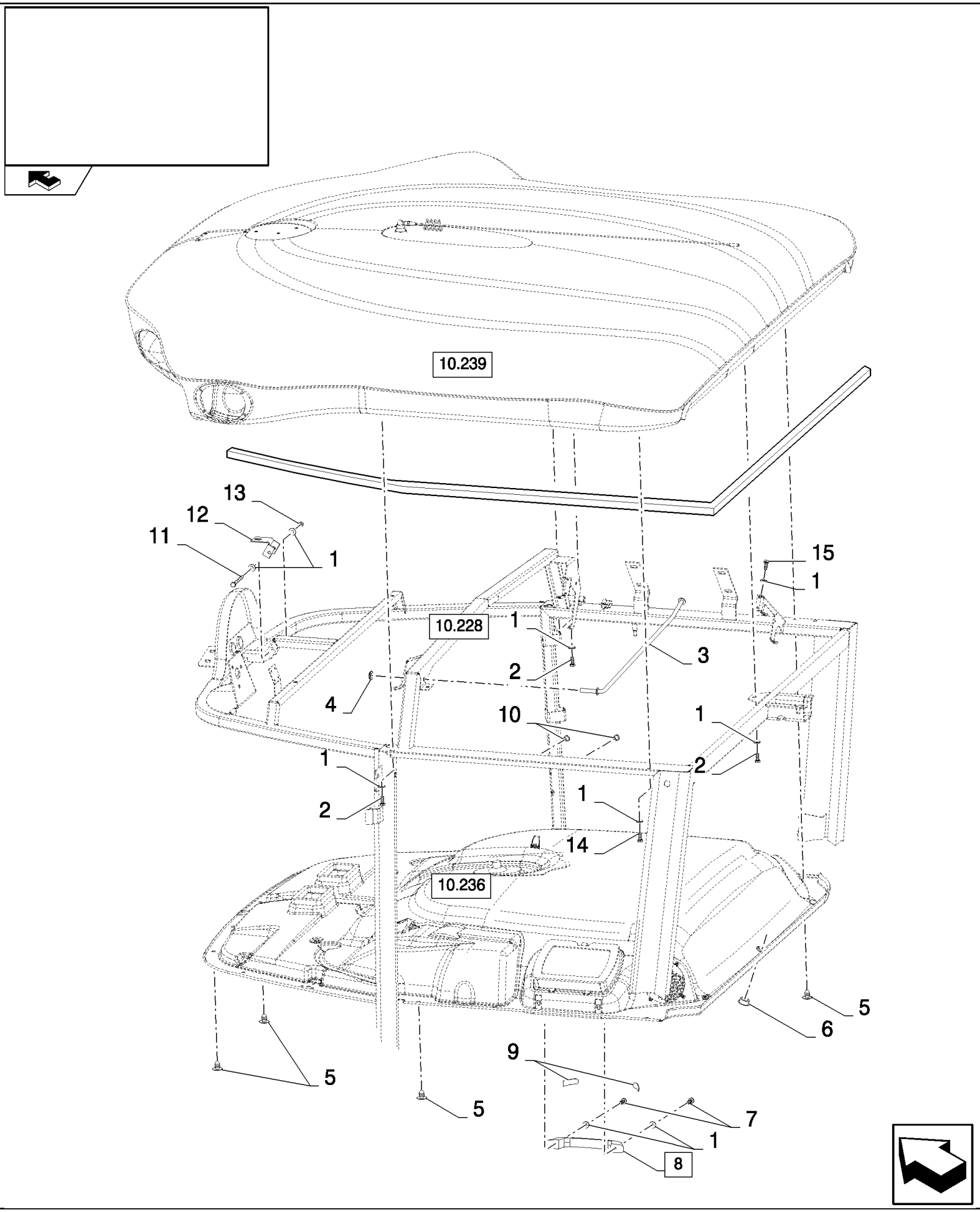

CSX7080 C659 - COMBINE (9/06-8/08)

10.240(01) CAB ROOF

ссылка	Номер детали	Кол-во	Описание
1	322357	19	WASHER, SPRING, Belleville, M6,
2	86508568	4	SCREW, Hex, M6 x 16, 8.8,
3	84814199	1	ARM, SUPPORTING,
4	431021	1	WASHER, SPECIAL,
5	84000834	16	PLUG,
6	84989341	1	PLUG,
7	86511831	2	SCREW, Cross Pan Hd, M6 x 25, M6x25
8	9500185	1	HANDLE GRIP, (9)
9	NSS	2	NOT SERVICED SEPARATELY,
10	9833239	2	NUT, M6
11	338413	1	SCREW, Hex, M6 x 60, 8.8,
12	84989197	1	SUPPORT,
13	9706755	2	NUT, M6, Cl 8,
14	86977786	4	BOLT, Hex, M6 x 25, 8.8,
15	86585711	4	SCREW, Cross Pan Hd, M6 x 10,
16	82036366	AR	SECURING BAND, L=5.61M

10.241(01) CAB ROOF LIGHTS, LH - C543

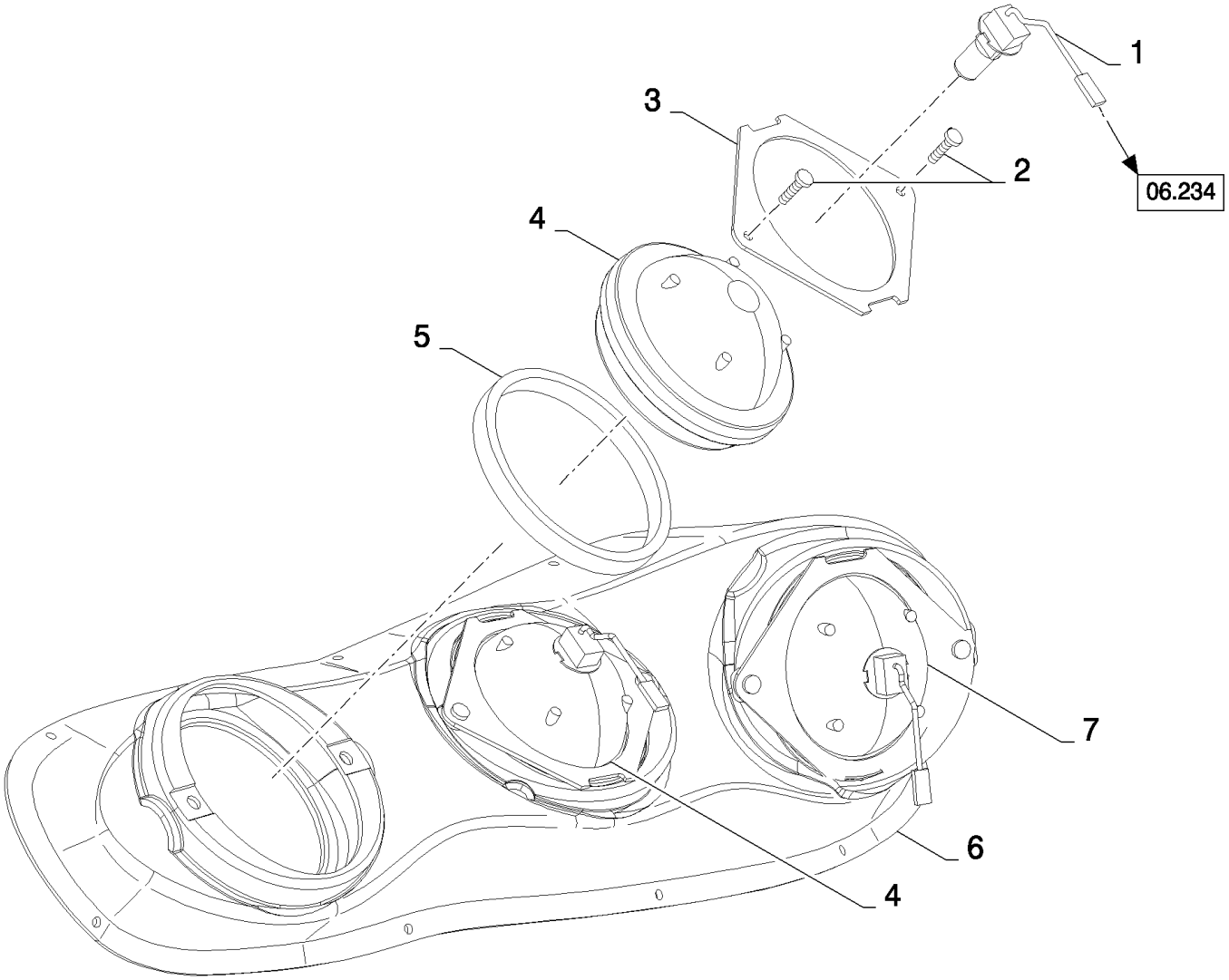

CSX7080 C659 - COMBINE (9/06-8/08)

10.241(01) CAB ROOF LIGHTS, LH - C543

ссылка	Номер детали	Кол-во	Описание
1	417720	3	BULB,
2	86511042	6	SCREW, Cross Pan Hd, M4 x 16,
3	84431845	3	PLATE,
4	84320764	2	LAMP,
5	84814420	3	SEAL,
6	84320392	1	BEZEL,
7	84320763	1	LAMP,

10.241(02) CAB ROOF LIGHTS, LH - D544

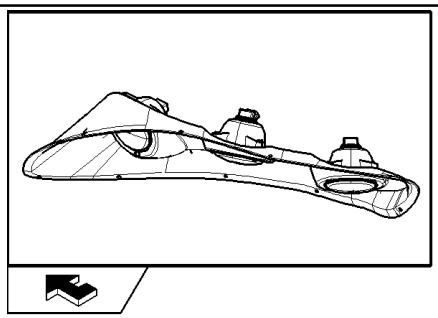

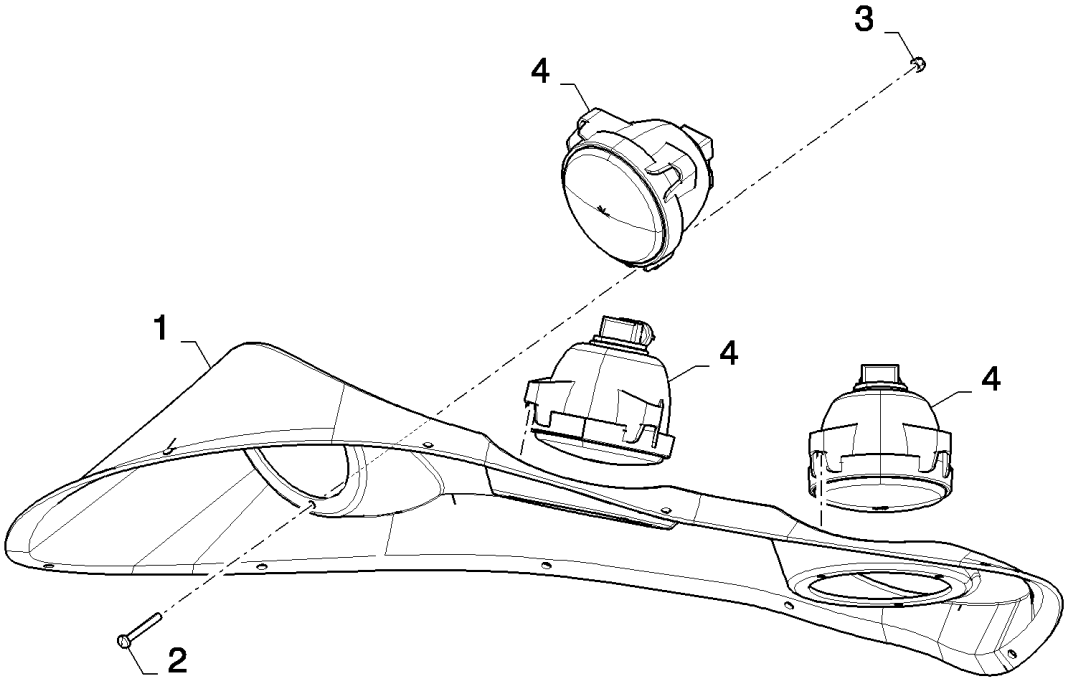

CSX7080 C659 - COMBINE (9/06-8/08)

10.241(02) CAB ROOF LIGHTS, LH - D544

ссылка	Номер детали	Кол-во	Описание
1	87399063	1	BEZEL,
2	86511825	9	SCREW, Cross Pan Hd, M4 x 30,
3	385681	9	NUT, LOCK, M4 x .7, Cl 8,
4	87521890	3	LAMP,

10.242(01) CAB ROOF LIGHTS, RH - C543

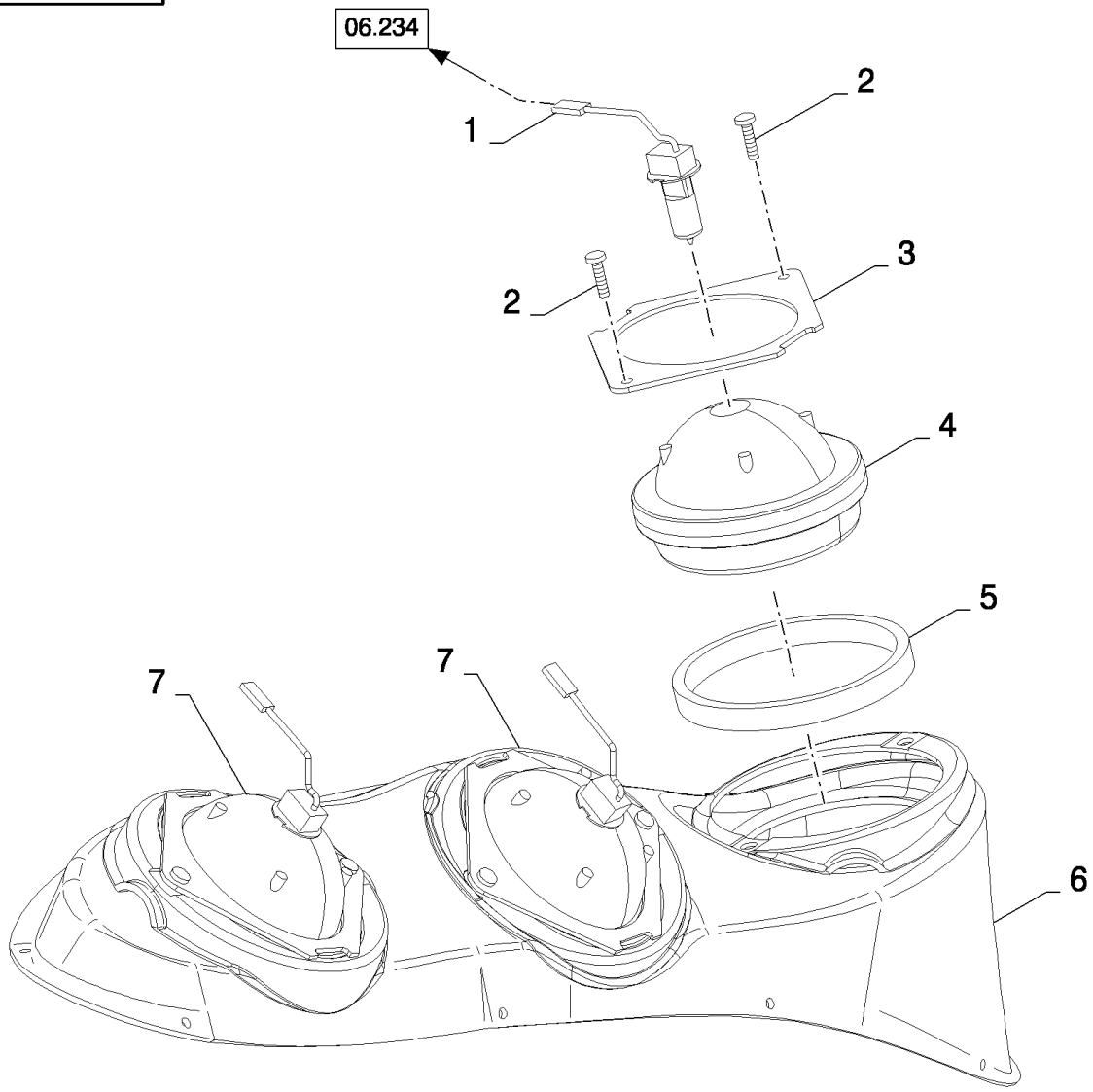

CSX7080 C659 - COMBINE (9/06-8/08)

10.242(01) CAB ROOF LIGHTS, RH - C543

ссылка	Номер детали	Кол-во	Описание
1	417720	3	BULB,
2	86511042	6	SCREW, Cross Pan Hd, M4 x 16,
3	84431845	3	PLATE,
4	84320763	1	LAMP,
5	84814420	3	SEAL,
6	84320396	1	BEZEL,
7	84320764	2	LAMP,

10.242(02) CAB ROOF LIGHTS, LH - D544

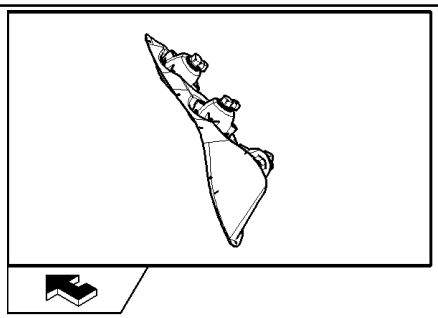

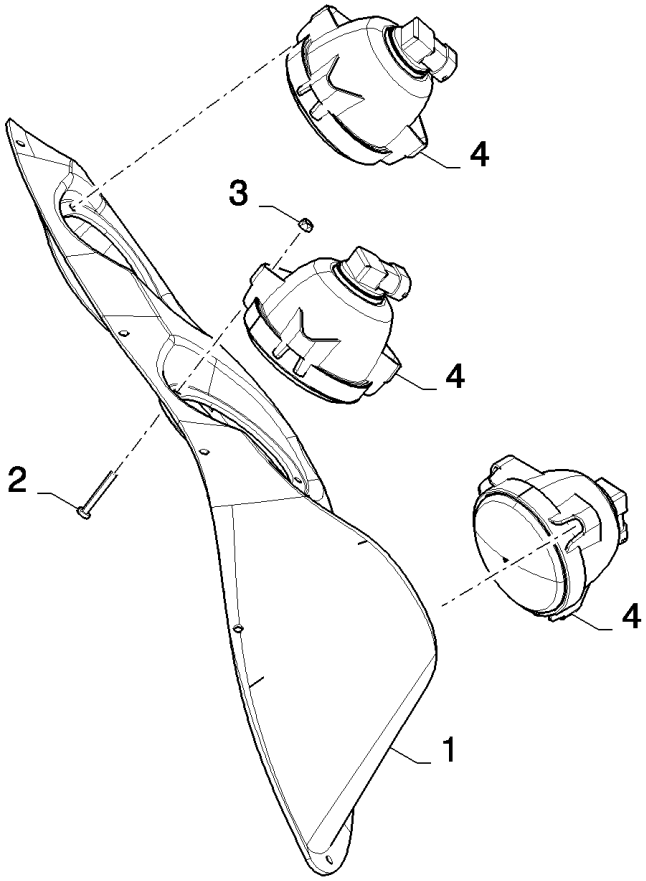

CSX7080 C659 - COMBINE (9/06-8/08)

10.242(02) CAB ROOF LIGHTS, LH - D544

ссылка	Номер детали	Кол-во	Описание
1	87399061	1	BEZEL,
2	86511825	9	SCREW, Cross Pan Hd, M4 x 30,
3	385681	9	NUT, LOCK, M4 x .7, Cl 8,
4	87521890	3	LAMP,

10.243(A 01) AIR CONDITIONER UNIT : MOUNTING GROUP

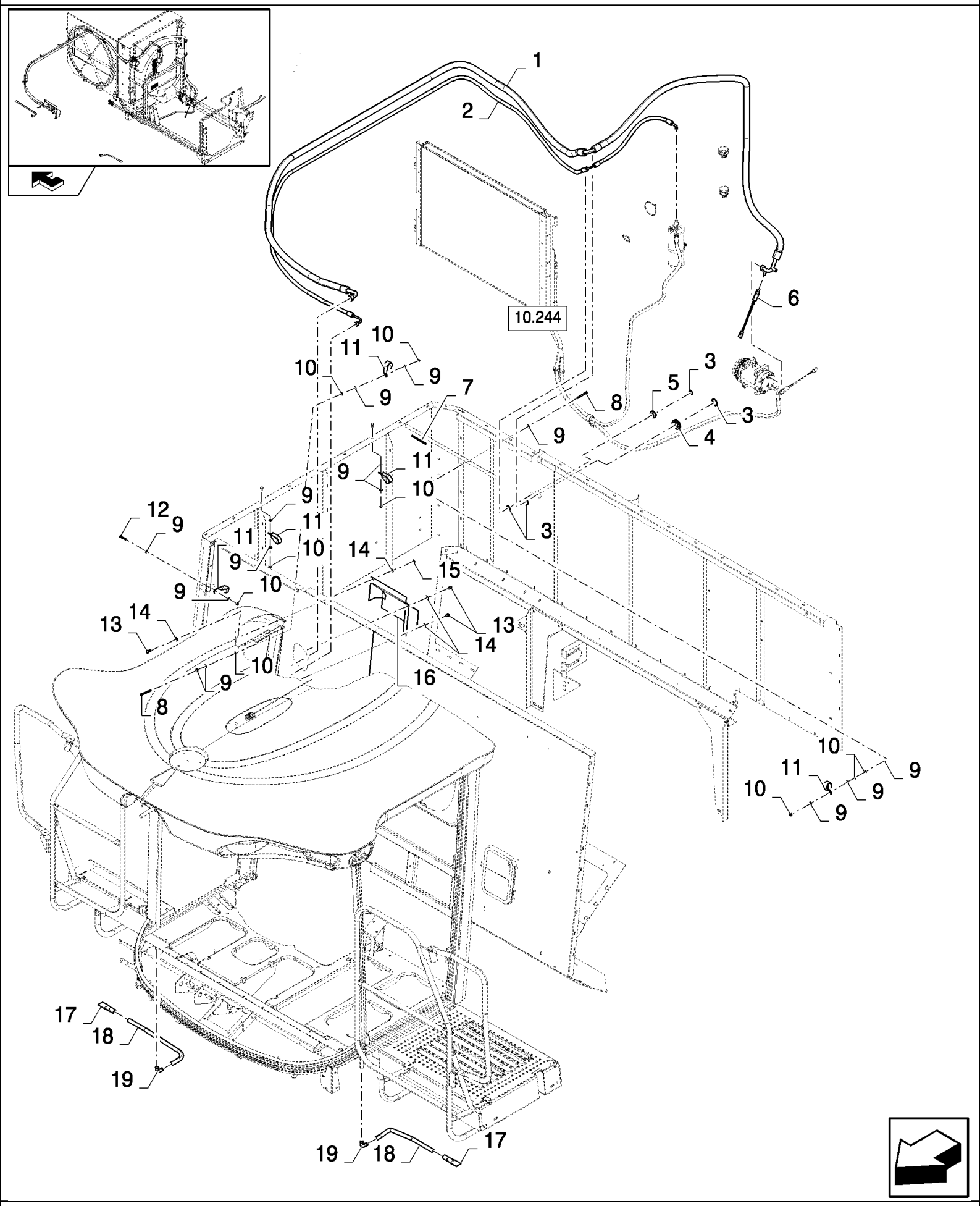

CSX7080 C659 - COMBINE (9/06-8/08)

10.243(A 01) AIR CONDITIONER UNIT : MOUNTING GROUP

ссылка	Номер детали	Кол-во	Описание
1	87374577	1	HOSE, FLEXIBLE,
2	84320641	1	HOSE, FLEXIBLE,
3	86566989	4	STRAP, CABLE,
4	129959	1	GROMMET,
5	84011186	1	GROMMET,
6	87366044	1	SWITCH, PRESSURE, , BSN C615
6	87366050	1	SWITCH, PRESSURE, , ASN D616
7	80401270	AR	PROFILE, L=0.1M
8	86508569	3	BOLT, Hex, M6 x 70, 8.8,
9	322357	22	WASHER, SPRING, Belleville, M6,
10	9706755	14	NUT, M6, Cl 8,
11	9513271	8	CLAMP,
12	43118	1	BOLT, Hex, M6 x 40, 8.8,
13	120103	3	BOLT, Hex, M8 x 16, 8.8,
14	322358	4	WASHER, SPRING, Belleville, M8,
15	9706690	1	NUT, M8, Cl 8,
16	84439794	1	PLATE, COVER,
17	635136	2	VALVE, CHECK,
18	84814601	AR	DUCT, L=1.1M, BSN C571
18	84814472	AR	HOSE, FLEXIBLE, L=1.1M, ASN D572
19	9513786	2	ELBOW,

10.244(A 01) AIR CONDITIONER UNIT : COMPRESSOR, DRYER

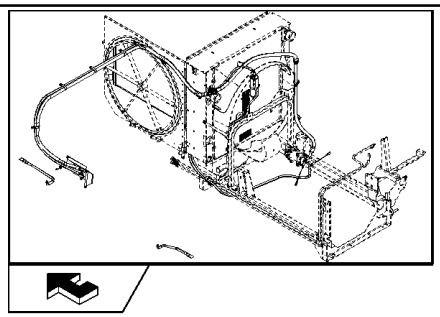

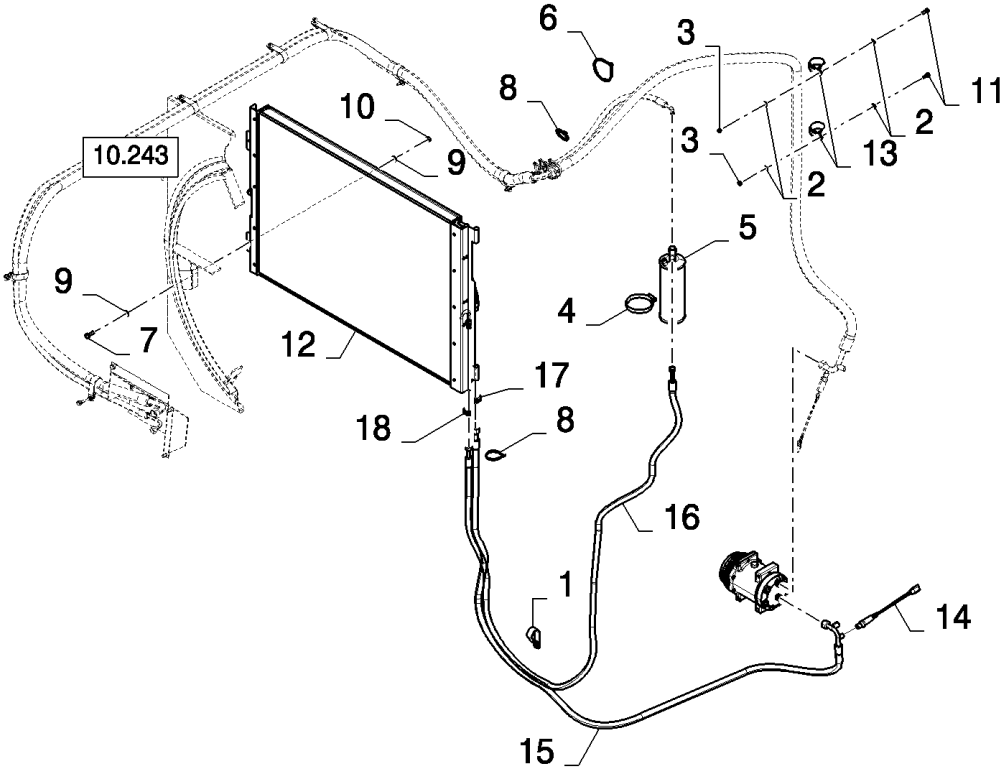

CSX7080 C659 - COMBINE (9/06-8/08)

10.244(A 01) AIR CONDITIONER UNIT : COMPRESSOR, DRYER

ссылка	Номер детали	Кол-во	Описание
1	9513271	1	CLAMP,
2	322357	4	WASHER, SPRING, Belleville, M6,
3	9706755	2	NUT, M6, Cl 8,
4	381144	1	CLAMP, HOSE, #60, 3.31/4.25 Type F Worm,
5	84058791	1	RECEIVER-DRYER,
5	84078487	1	RECEIVER-DRYER, , FOR SWEDEN ONLY
6	86566990	1	STRAP, CABLE,
7	43127	2	BOLT, Hex, M8 x 25, 8.8,
8	86566989	2	STRAP, CABLE,
9	322358	4	WASHER, SPRING, Belleville, M8,
10	9706690	2	NUT, M8, Cl 8,
11	86977786	2	BOLT, Hex, M6 x 25, 8.8,
12	87330260	1	CONDENSER, , BSN C571
12	87610363	2	CONDENSER, , ASN D572
13	455556	2	CLAMP,
14	87366045	1	SWITCH, A/C HIGH PRESSURE, , BSN C615
14	87366051	1	SWITCH, PRESSURE, , ASN D616
15	84448937	1	HOSE, FLEXIBLE,
16	84320640	1	HOSE, FLEXIBLE,
17	102043	2	GROMMET,
18	331242	1	GROMMET, , ASN D572

10.245(A 01) AIR CONDITIONER UNIT : MOUNTING GROUP

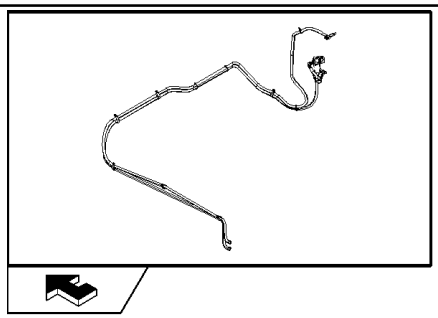

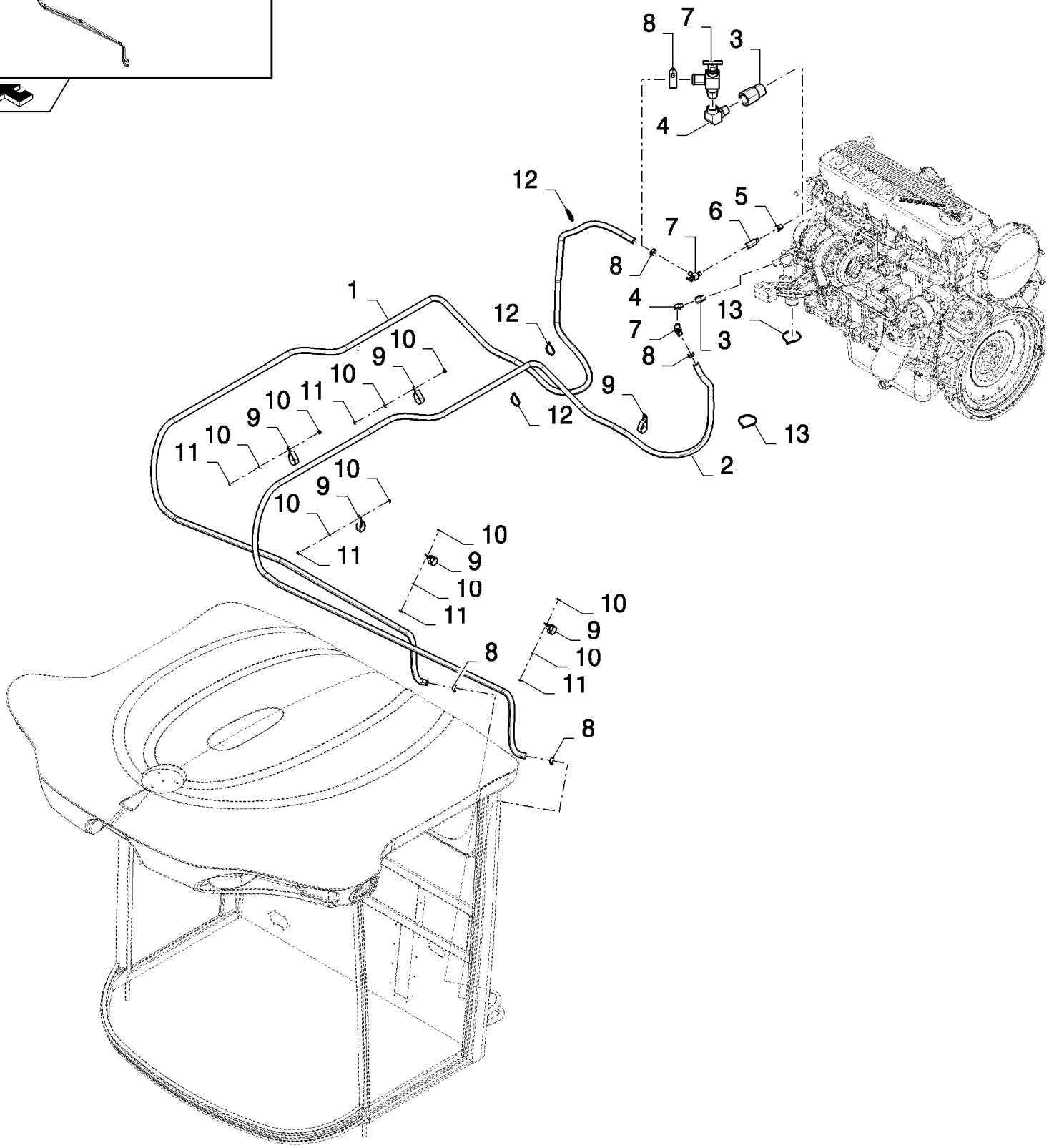

CSX7080 C659 - COMBINE (9/06-8/08)

10.245(A 01) AIR CONDITIONER UNIT : MOUNTING GROUP

ссылка	Номер детали	Кол-во	Описание
1	84607279	AR	HOSE, L=6.5M
2	84607280	AR	HOSE, L=5M
3	84334474	1	FITTING, , BSN C543
3	84334474	2	FITTING, , ASN D544
4	83961127	1	ELBOW, , BSN C543
4	83961127	2	ELBOW, , ASN D544
5	87016923	1	REDUCER, 1/2"-14 NPTF x 3/8"-18 Fem NPTF, , BSN C543
6	84012391	1	JOINT, UNIVERSAL, , BSN C543
7	83961305	2	VALVE, SHUT-OFF,
8	326082	4	CLAMP,
9	9513271	6	CLAMP,
10	322357	10	WASHER, SPRING, Belleville, M6,
11	9706755	5	NUT, M6, Cl 8,
12	86566989	4	STRAP, CABLE, , BSN C543
12	86566989	3	STRAP, CABLE, , ASN D544
13	86566990	1	STRAP, CABLE, , BSN C543
13	86566990	2	STRAP, CABLE, , ASN D544

10.246(01) AIR CONDITIONER

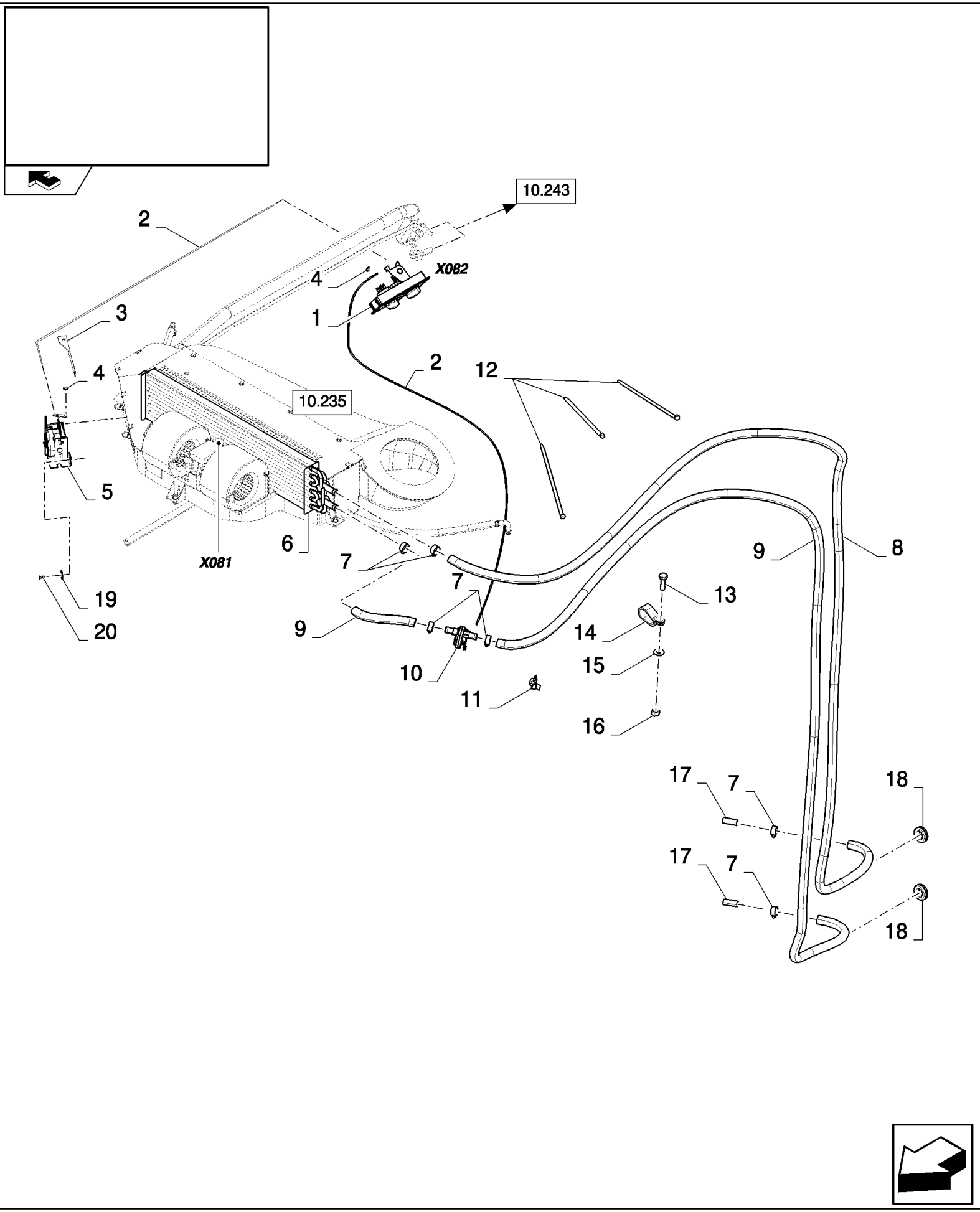

CSX7080 C659 - COMBINE (9/06-8/08)

10.246(01) AIR CONDITIONER

ссылка	Номер детали	Кол-во	Описание
1	87354648	1	PANEL, INSTRUMENTS, (19,20)
2	87383765	1	CABLE, , AIRCO WITH HEATING
2	87383764	1	CABLE, , AIRCO WITHOUT HEATING
3	84814475	1	BRACKET, , AIRCO WITHOUT HEATING
4	84819630	AR	WASHER, , AIRCO WITHOUT HEATING
5	84814477	1	SWITCH, THERMOGUARD, , AIRCO WITH HEATING
5	84814474	1	SWITCH, THERMOGUARD, , AIRCO WITHOUT HEATING
6	84814478	1	COIL, , AIRCO WITH HEATING
7	326082	6	CLAMP, , AIRCO WITH HEATING
8	84607279	1	HOSE, L=3.2M, AIRCO WITH HEATING
9	84607280	1	HOSE, L=3.2M, AIRCO WITH HEATING
10	84607110	1	CONNECTOR, WIRE, , AIRCO WITH HEATING
11	84807149	1	CLIP, , AIRCO WITH HEATING
12	368582	3	STRAP, , AIRCO WITH HEATING
13	120100	1	BOLT, Hex, M6 x 20, 8.8, , AIRCO WITH HEATING
14	9513271	1	CLAMP, , AIRCO WITH HEATING
15	322357	1	WASHER, SPRING, Belleville, M6, , AIRCO WITH HEATING
16	9706755	1	NUT, M6, Cl 8, , AIRCO WITH HEATING
17	9994350	2	CONNECTOR, ELEC, , AIRCO WITH HEATING
18	173011	2	GROMMET, , AIRCO WITH HEATING
19	9824840	2	WASHER, M4,
20	353075	2	SCREW,

10.250(01) SAFETY SUPPORT

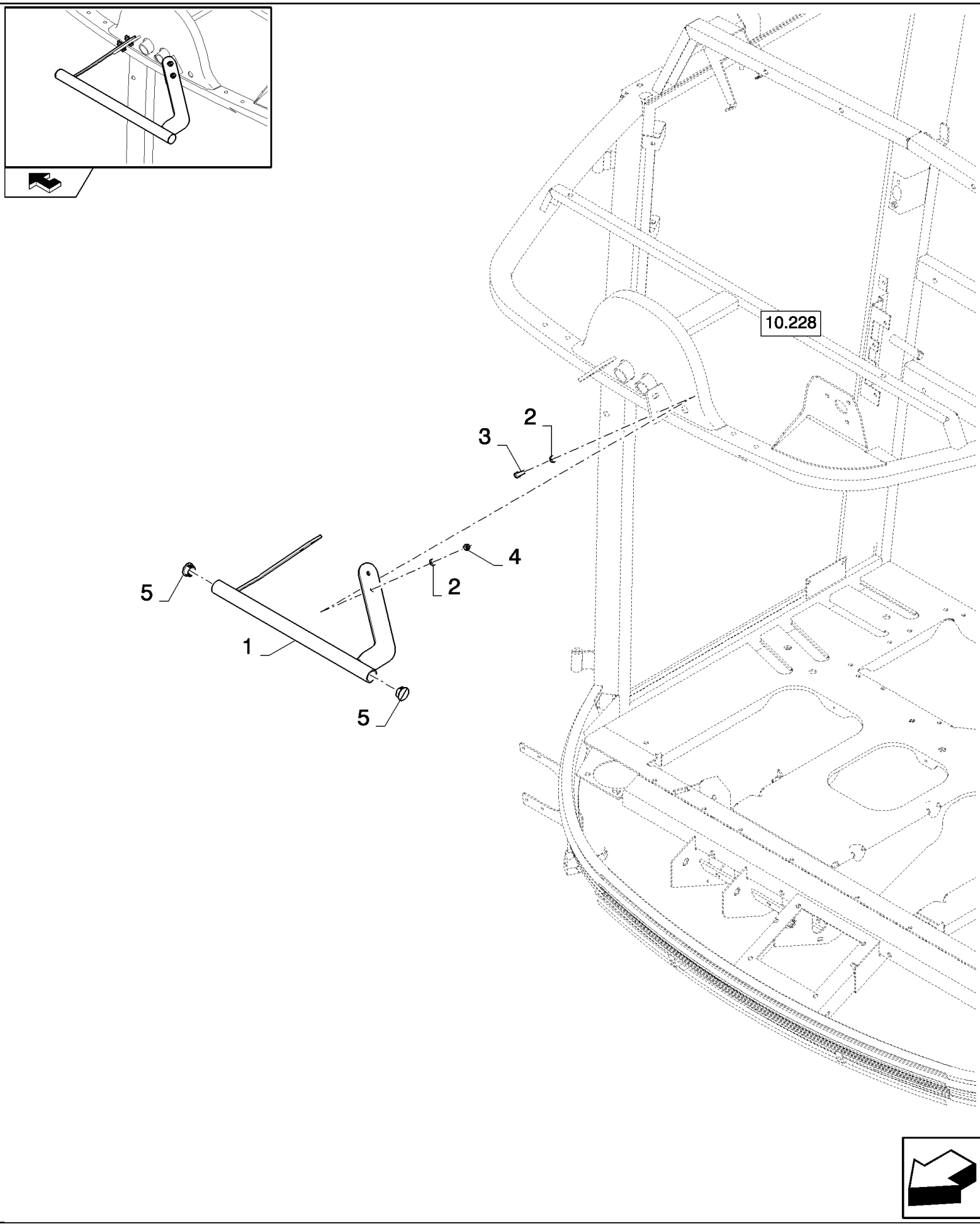

CSX7080 C659 - COMBINE (9/06-8/08)

10.250(01) SAFETY SUPPORT

ссылка	Номер детали	Кол-во	Описание
1	87315421	1	SUPPORT,
2	9824259	8	WASHER, M6 x 12 x 1.6,
3	86977786	4	BOLT, Hex, M6 x 25, 8.8,
4	9706755	4	NUT, M6, Cl 8,
5	84989341	2	PLUG,

CSX7080 C659 - COMBINE (9/06-8/08)

10.251(01) SAFETY SUPPORT - FOR LATERALE ONLY

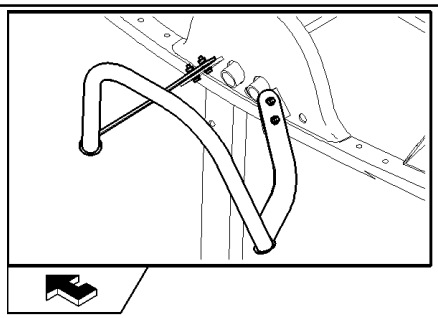

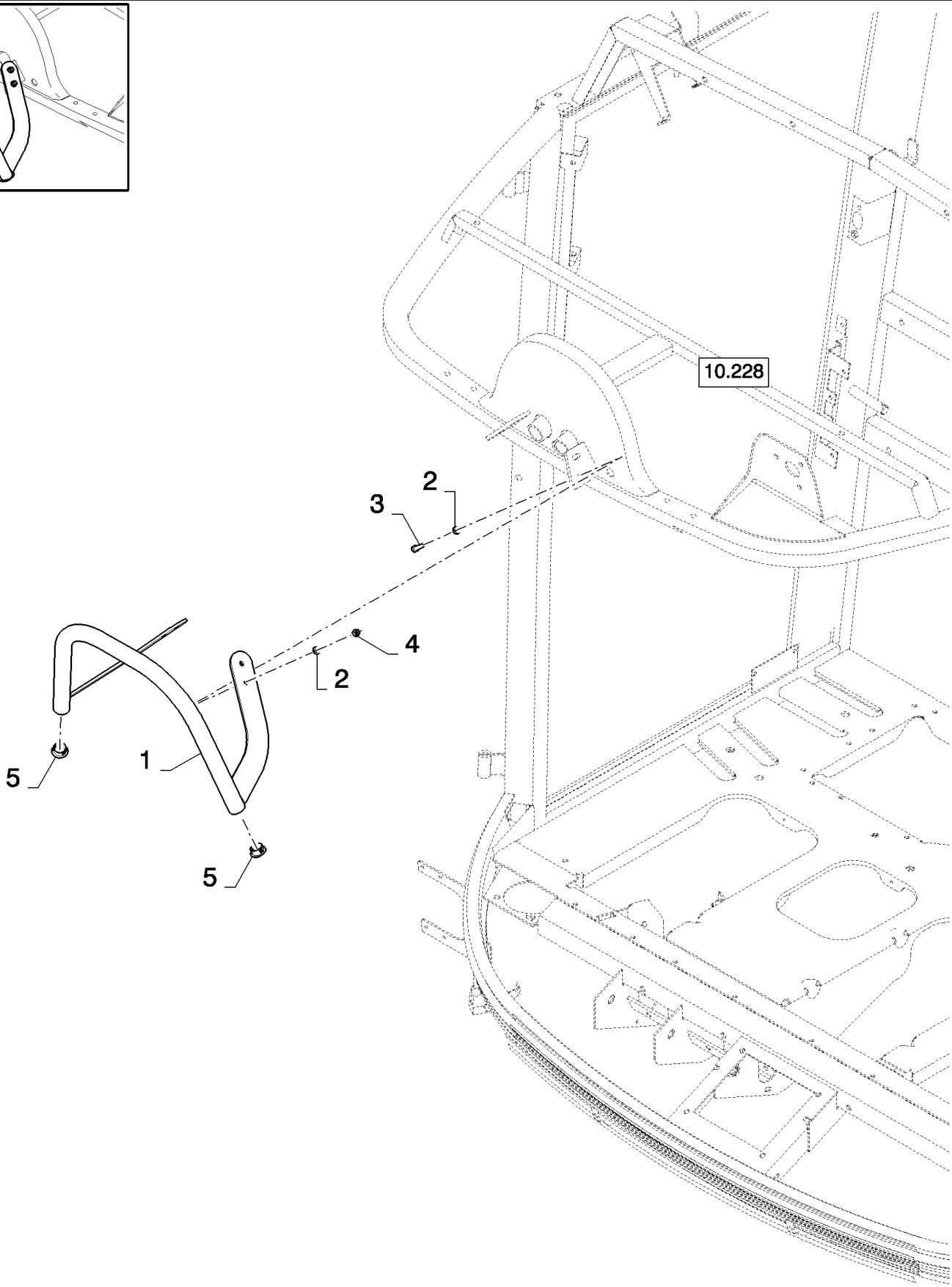

CSX7080 C659 - COMBINE (9/06-8/08)

10.251(01) SAFETY SUPPORT - FOR LATERALE ONLY

ссылка	Номер детали	Кол-во	Описание
1	87724806	1	SUPPORT,
2	9824259	8	WASHER, M6 x 12 x 1.6,
3	86977786	4	BOLT, Hex, M6 x 25, 8.8,
4	9706755	4	NUT, M6, Cl 8,
5	84989341	2	PLUG,

WHEELS/TRACKS **ROUES/CHENILLES** **RUEDAS/ORUGAS** **HJUL/BÆLTETRÆK**

RUOTI/CINGOLATURA **RÄDER/RAUPENKETTEN** **RODAS/RASTOS** **WIELEN/RUPSBANDEN**

SEC. 11

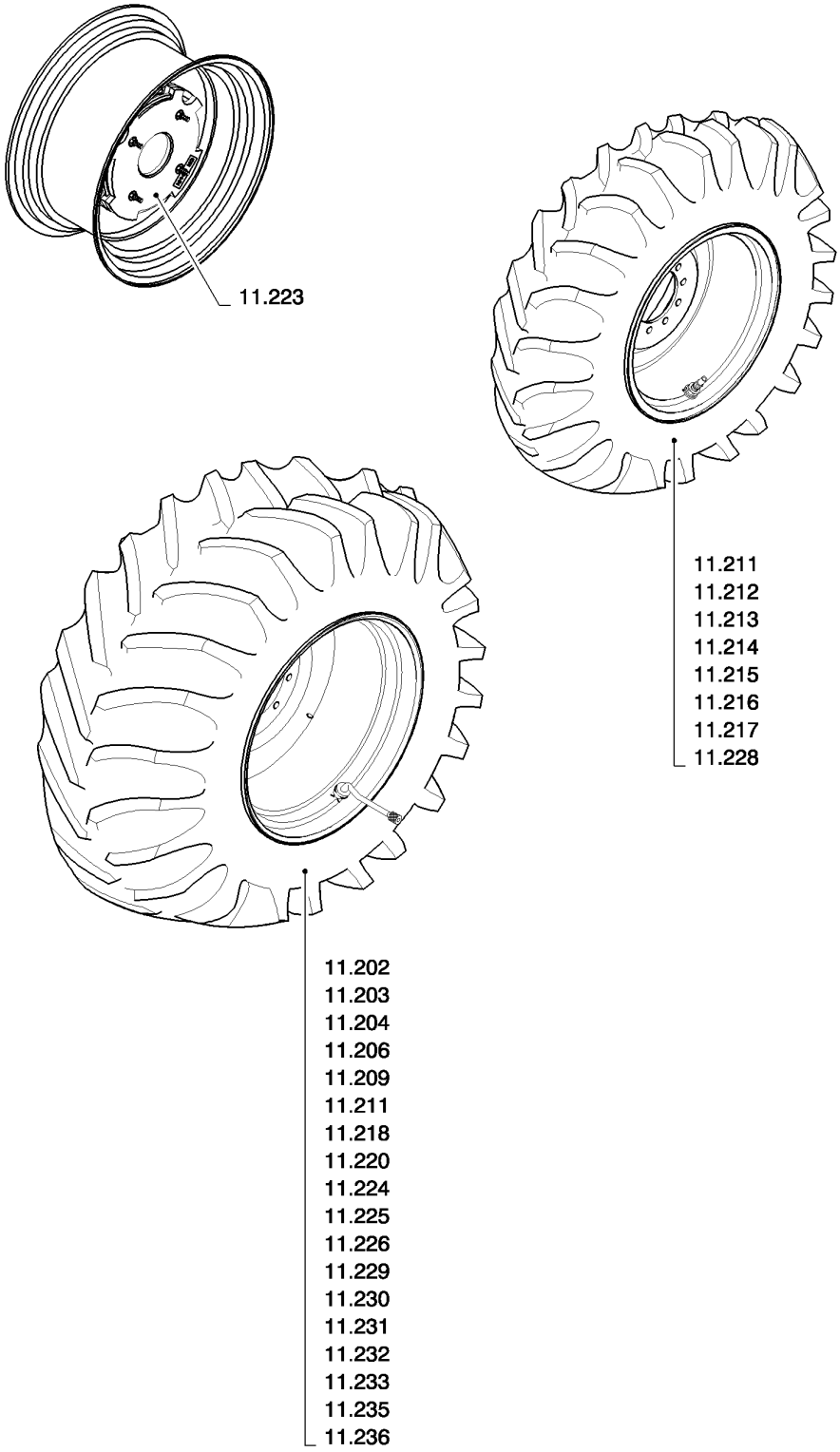

ссылка	Номер детали	Кол-во	Описание

11.202(01) TRACTION WHEELS : 710/75R34-178A8-MEGAXBIB(10)

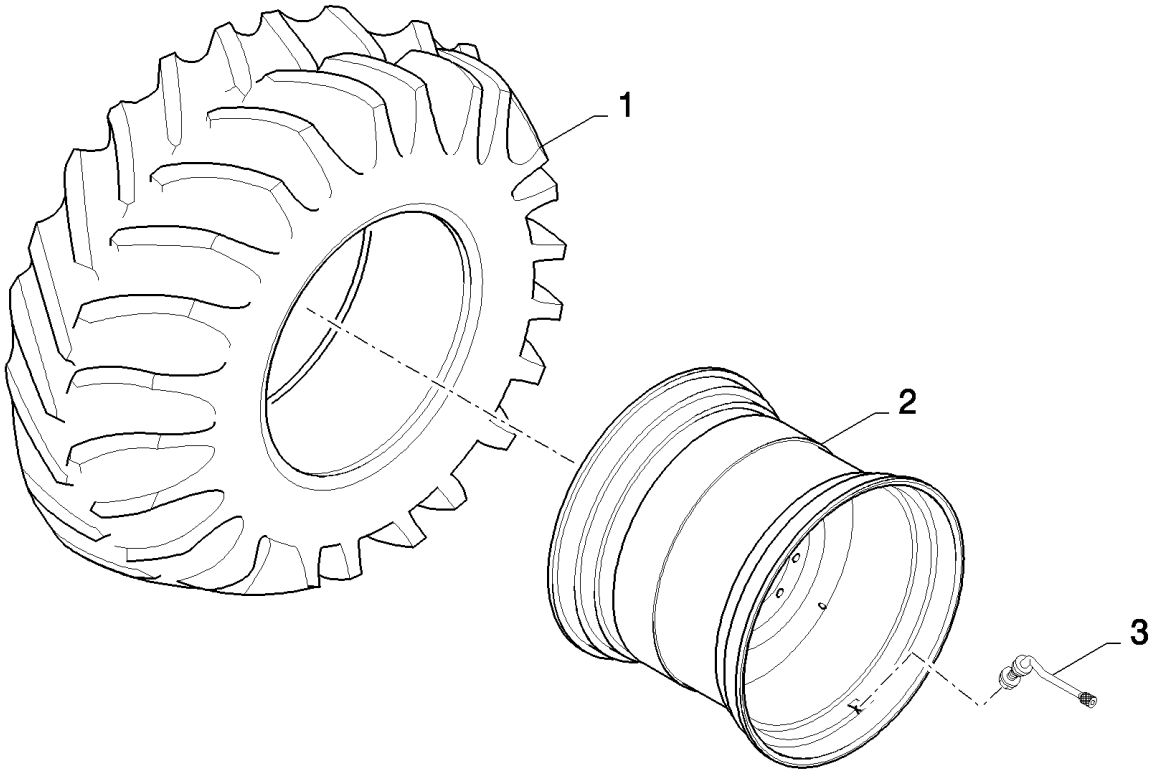

CSX7080 C659 - COMBINE (9/06-8/08)

11.202(01) TRACTION WHEELS : 710/75R34-178A8-MEGAXBIB(10)

ссылка	Номер детали	Кол-во	Описание
1	87663287	2	RIM,
2	84446099	2	TYRE/TIRE,
3	84460168	2	VALVE STEM,

11.206(01) TRACTION WHEELS : 650/75R32-172A8(-24)5B

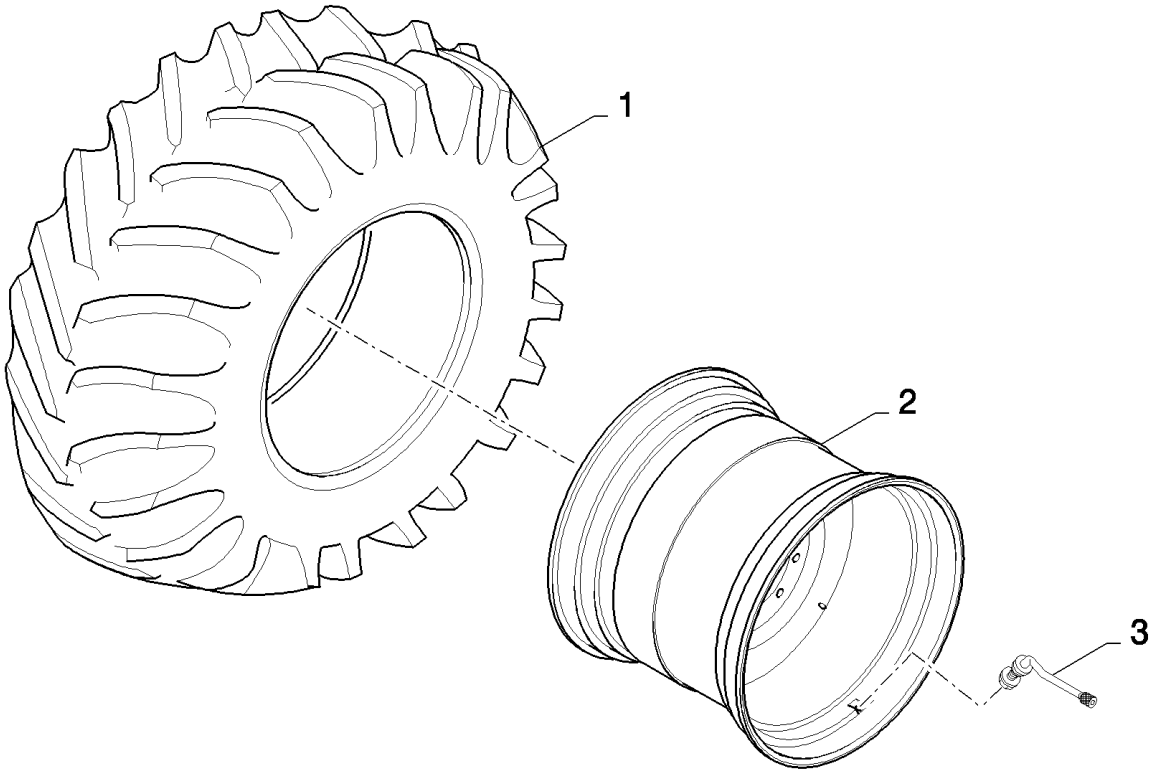

CSX7080 C659 - COMBINE (9/06-8/08)

11.206(01) TRACTION WHEELS : 650/75R32-172A8(-24)5B

ссылка	Номер детали	Кол-во	Описание
1	84068189	2	TYRE/TIRE,
2	84817046	2	RIM,
3	84460168	2	VALVE STEM,

11.209(A 01) TRACTION WHEELS : 900/60R32-176A8-DT(-113)

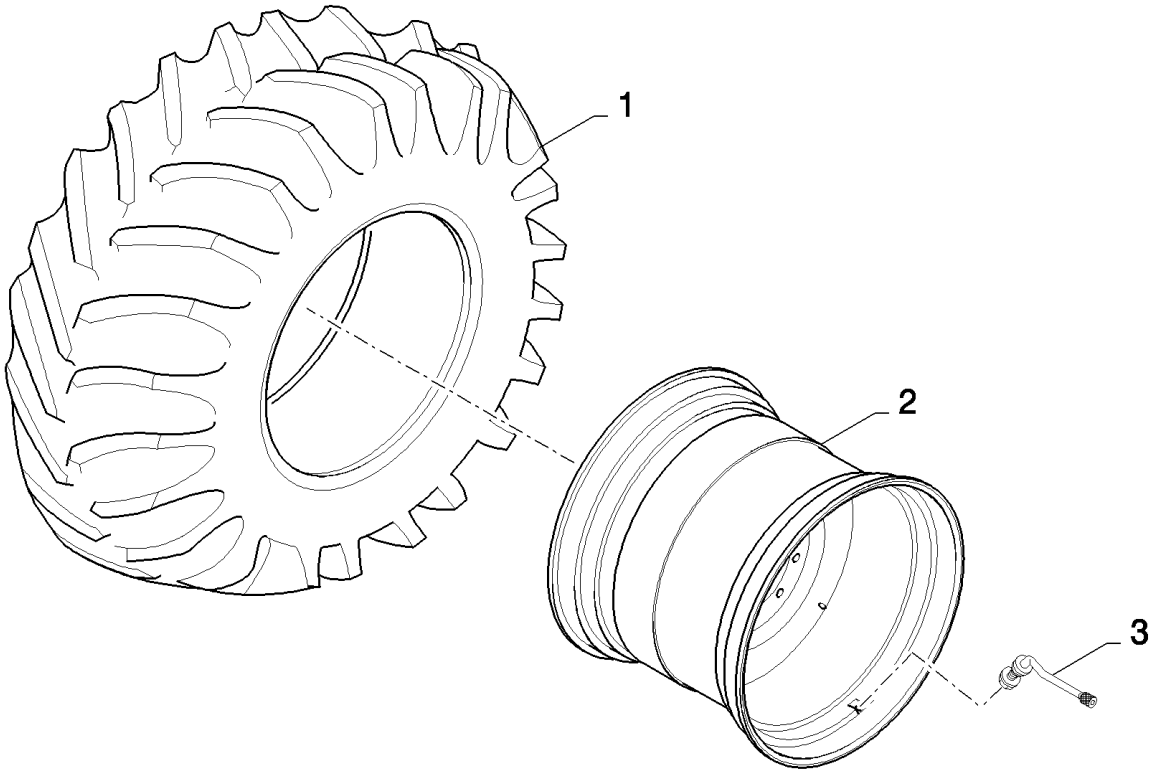

CSX7080 C659 - COMBINE (9/06-8/08)

11.209(A 01) TRACTION WHEELS : 900/60R32-176A8-DT(-113)

ссылка	Номер детали	Кол-во	Описание
1	84100134	2	TYRE/TIRE,
2	84429218	2	RIM,
3	84460168	2	VALVE STEM,

11.211(01) STEERING WHEELS : 16.0/70-20(SGI 1-3)

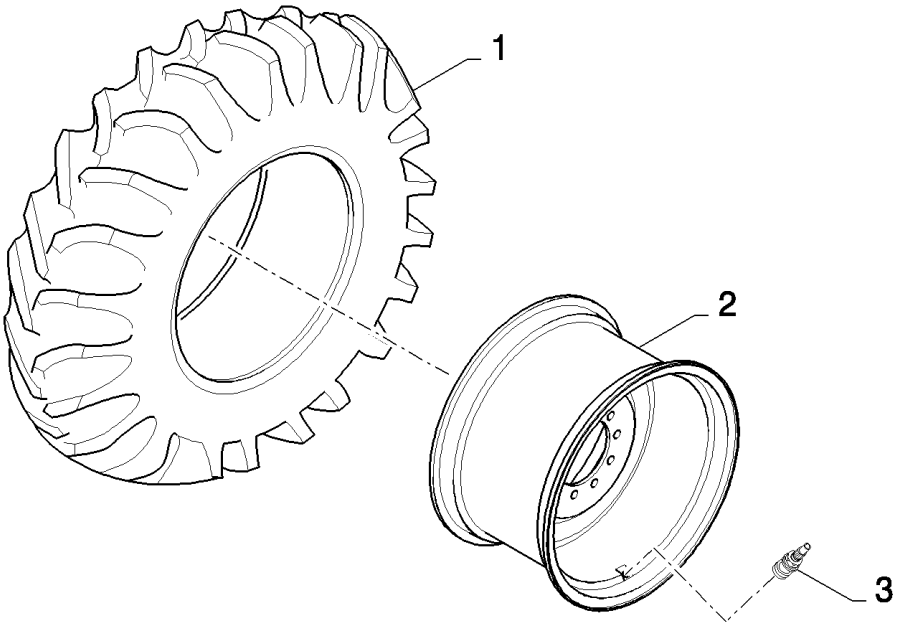

CSX7080 C659 - COMBINE (9/06-8/08)

11.211(01) STEERING WHEELS : 16.0/70-20(SGI 1-3)

ссылка	Номер детали	Кол-во	Описание
1	87324431	2	TYRE/TIRE,
2	84814083	2	RIM,
3	395448	2	VALVE STEM,

11.212(01) STEERING WHEELS : 16.5/85-28(SGI 13)

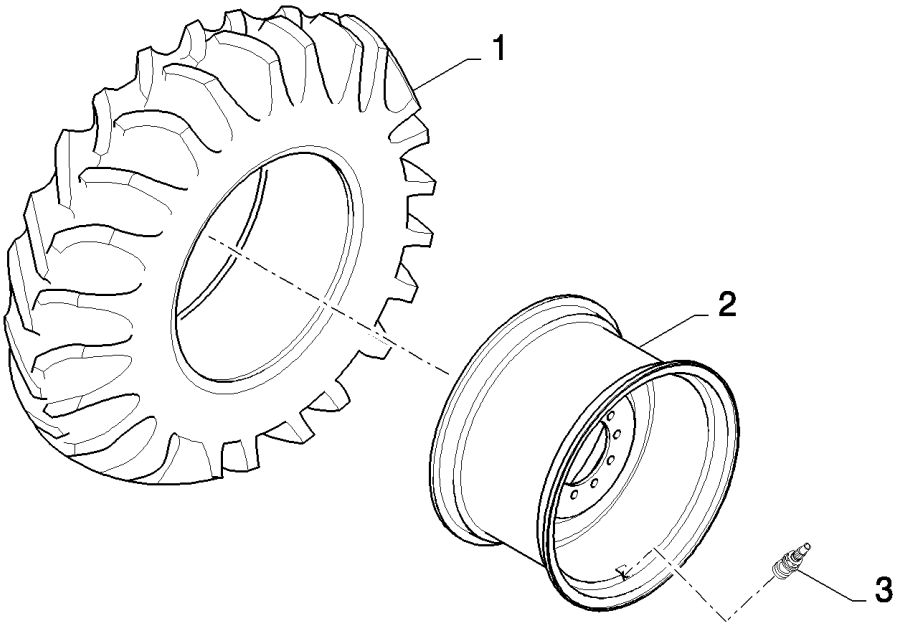

CSX7080 C659 - COMBINE (9/06-8/08)

11.212(01) STEERING WHEELS : 16.5/85-28(SGI 13)

ссылка	Номер детали	Кол-во	Описание
1	84036026	2	TYRE/TIRE,
2	84814085	2	RIM,
3	395448	2	VALVE STEM,

11.213(01) STEERING WHEELS : 500/70R24-164A8-AC70G (-105A)

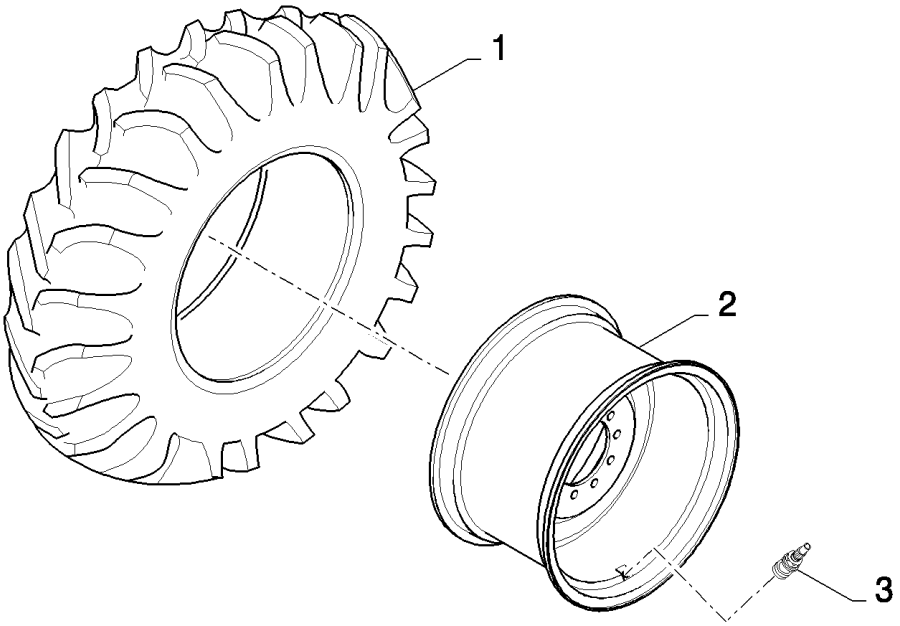

CSX7080 C659 - COMBINE (9/06-8/08)

11.213(01) STEERING WHEELS : 500/70R24-164A8-AC70G (-105A)

ссылка	Номер детали	Кол-во	Описание
1	87521147	2	TYRE/TIRE,
2	87530860	2	RIM,
3	395448	2	VALVE STEM,

11.214(01) STEERING WHEELS : 460/70R24-152A8-IT520 (-105A)

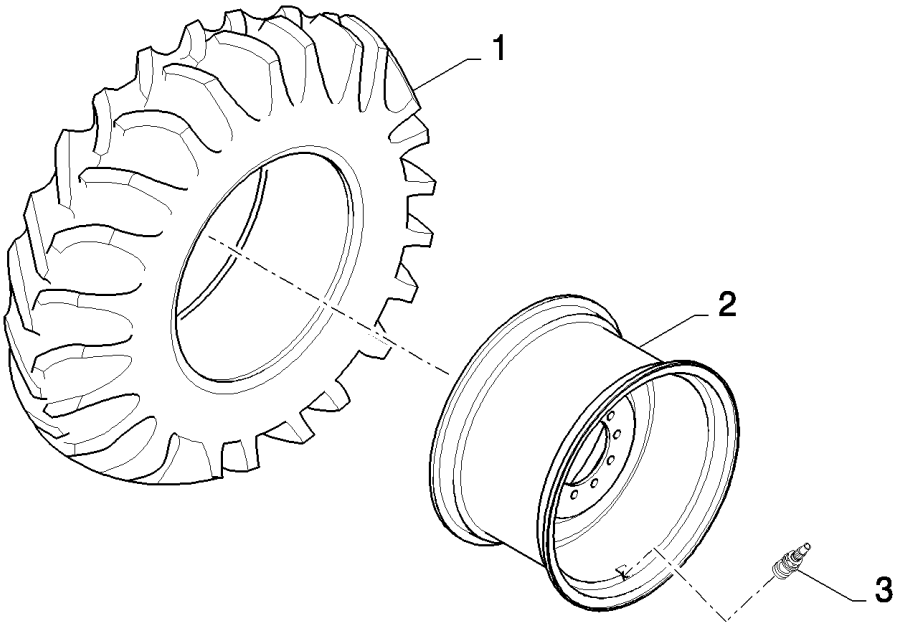

CSX7080 C659 - COMBINE (9/06-8/08)

11.214(01) STEERING WHEELS : 460/70R24-152A8-IT520 (-105A)

ссылка	Номер детали	Кол-во	Описание
1	84801075	2	TYRE/TIRE,
1	87530860	2	RIM,
2	395448	2	VALVE STEM,

11.215(01) STEERING WHEELS : 460/70R24-152A8 (-10)

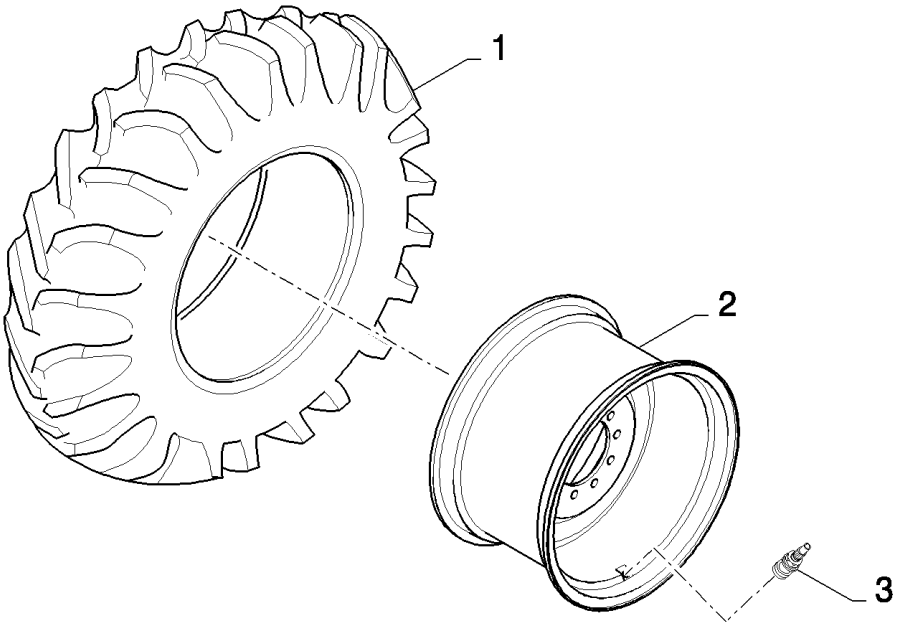

CSX7080 C659 - COMBINE (9/06-8/08)

11.215(01) STEERING WHEELS : 460/70R24-152A8 (-10)

ссылка	Номер детали	Кол-во	Описание
1	9514625	2	TYRE/TIRE,
1	84801075	2	TYRE/TIRE,
2	84989725	2	RIM,
3	395448	2	VALVE STEM,

11.215(A 01) STEERING WHEELS : 460/70R24-152A8 (-95)

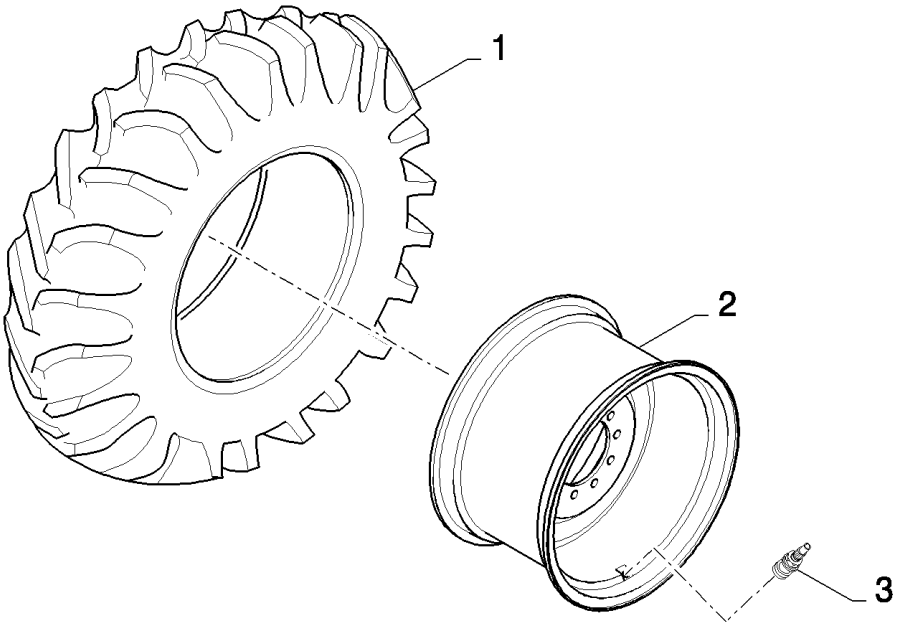

CSX7080 C659 - COMBINE (9/06-8/08)

11.215(A 01) STEERING WHEELS : 460/70R24-152A8 (-95)

ссылка	Номер детали	Кол-во	Описание
1	84801075	2	TYRE/TIRE,
2	84814081	2	RIM,
3	395448	2	VALVE STEM,

11.216(01) STEERING WHEELS : 500/70R24-164A8-AC70G (-60)

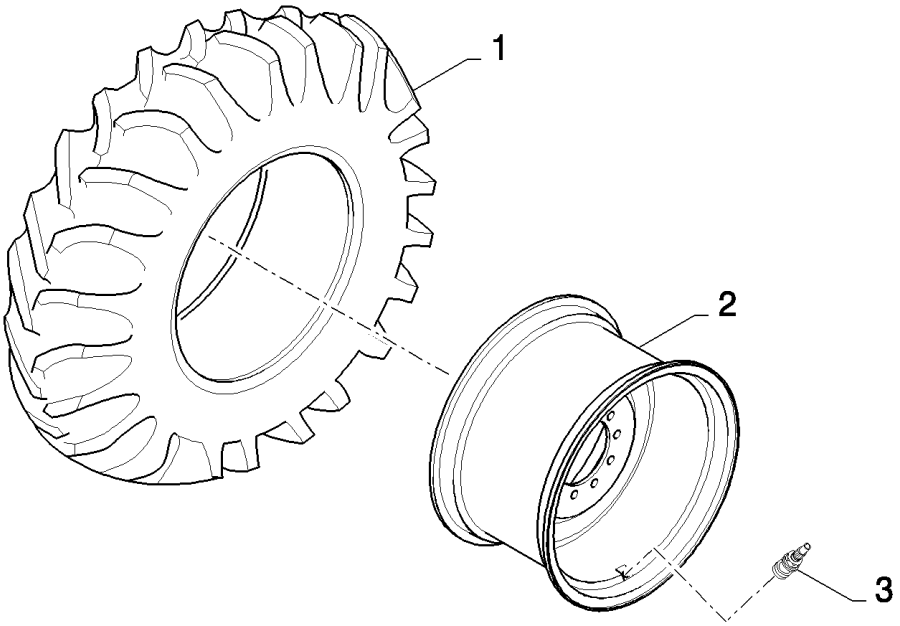

CSX7080 C659 - COMBINE (9/06-8/08)

11.216(01) STEERING WHEELS : 500/70R24-164A8-AC70G (-60)

ссылка	Номер детали	Кол-во	Описание
1	87521147	2	TYRE/TIRE,
2	84989894	2	RIM,
3	395448	2	VALVE STEM,

11.217(01) STEERING WHEELS : 500/70R24-164A8-AC70G (-95)

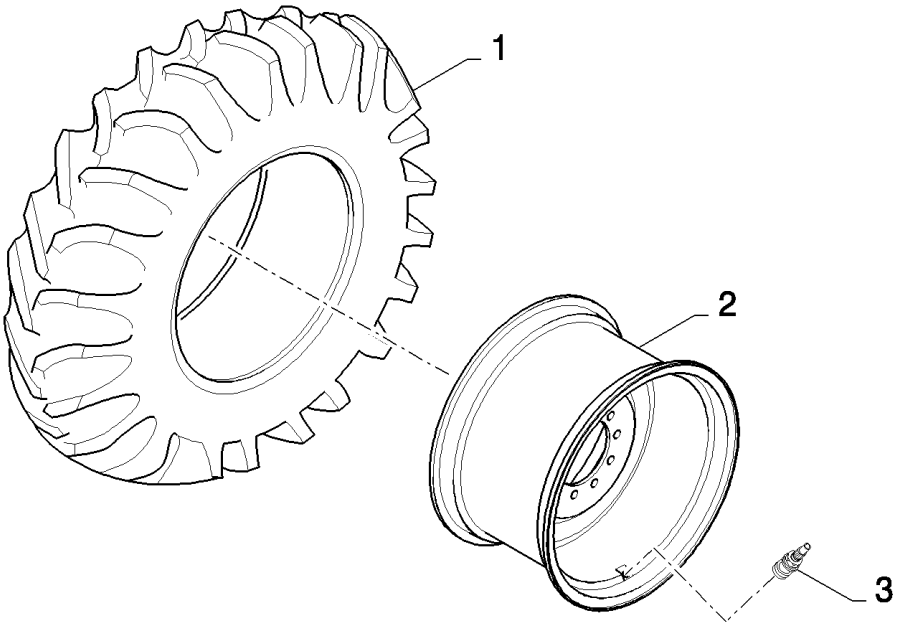

CSX7080 C659 - COMBINE (9/06-8/08)

11.217(01) STEERING WHEELS : 500/70R24-164A8-AC70G (-95)

ссылка	Номер детали	Кол-во	Описание
1	87521147	2	TYRE/TIRE,
2	84814081	2	RIM,
3	395448	2	VALVE STEM,

11.220(01) TRACTION WHEELS : 800/65R32 - 172A8 - DT822 (42)

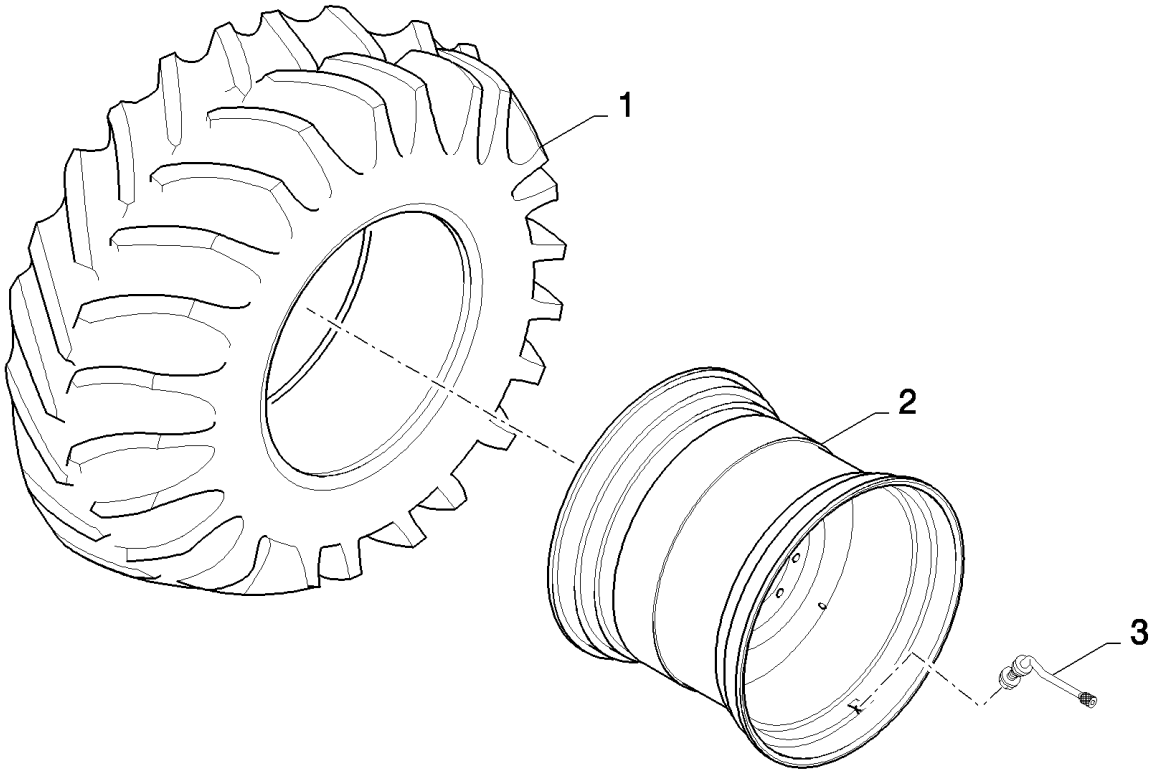

CSX7080 C659 - COMBINE (9/06-8/08)

11.220(01) TRACTION WHEELS : 800/65R32 - 172A8 - DT822 (42)

ссылка	Номер детали	Кол-во	Описание
1	84078790	2	TYRE/TIRE,
2	84429203	2	RIM,
3	84460168	2	VALVE STEM,

11.223(01) COUNTERWEIGHTS

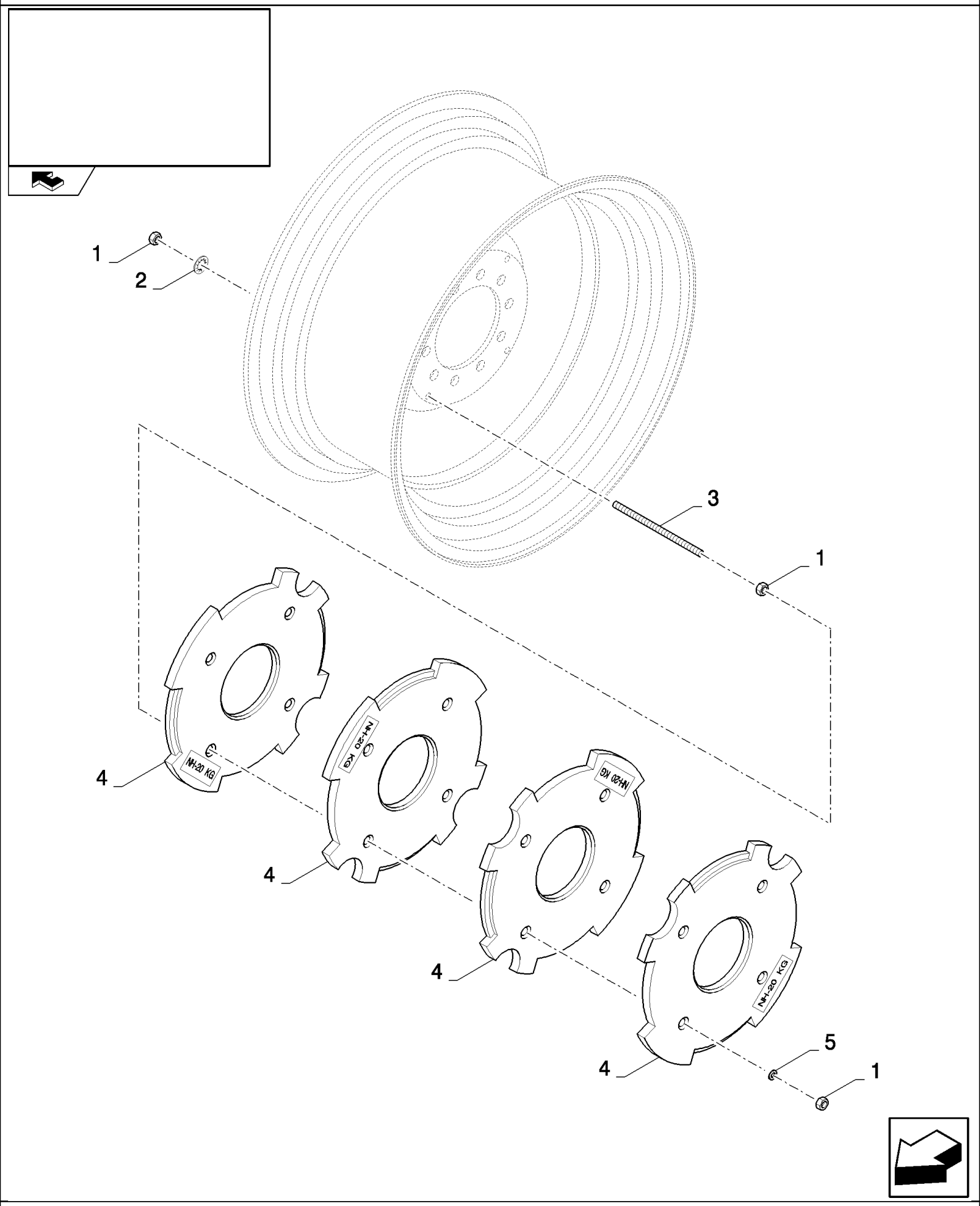

CSX7080 C659 - COMBINE (9/06-8/08)

11.223(01) COUNTERWEIGHTS

ссылка	Номер детали	Кол-во	Описание
1	9706685	24	NUT, M12, Cl 8,
2	300913	8	WASHER, LOCK, 12.5MM
3	84989794	8	ROD, THREADED, M12x220, FOR 200 KG
3	84989795	8	ROD, THREADED, M12x383, FOR 400 KG
4	84438813	10	WEIGHT, COUNTER, , FOR 200 KG
4	84438813	20	WEIGHT, COUNTER, , FOR 400 KG
5	394630	8	WASHER, 13MM

11.224(01) TRACTION WHEELS : 710/75R34 - 178A8 (38)

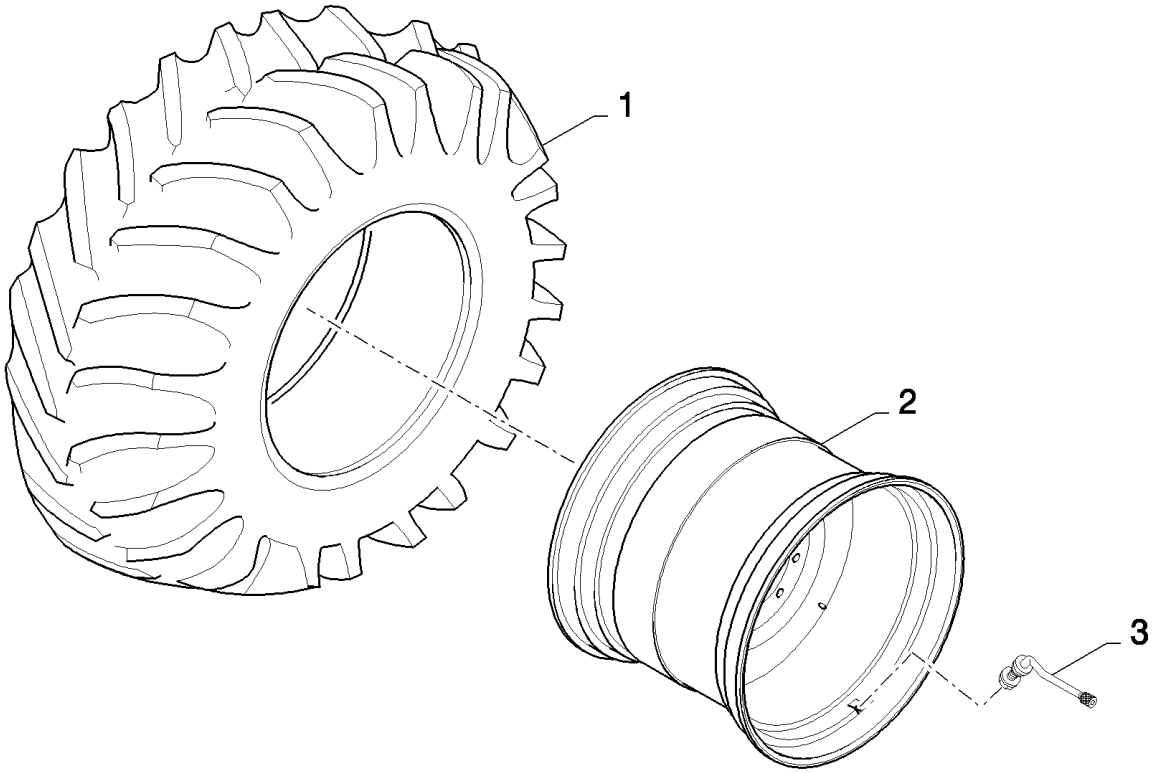

CSX7080 C659 - COMBINE (9/06-8/08)

11.224(01) TRACTION WHEELS : 710/75R34 - 178A8 (38)

ссылка	Номер детали	Кол-во	Описание
1	84446099	2	TYRE/TIRE,
2	84457054	2	RIM,
3	84460168	2	VALVE STEM,

11.228(01) STEERING WHEELS : 14.9R24-150A8-A-356 (-95)

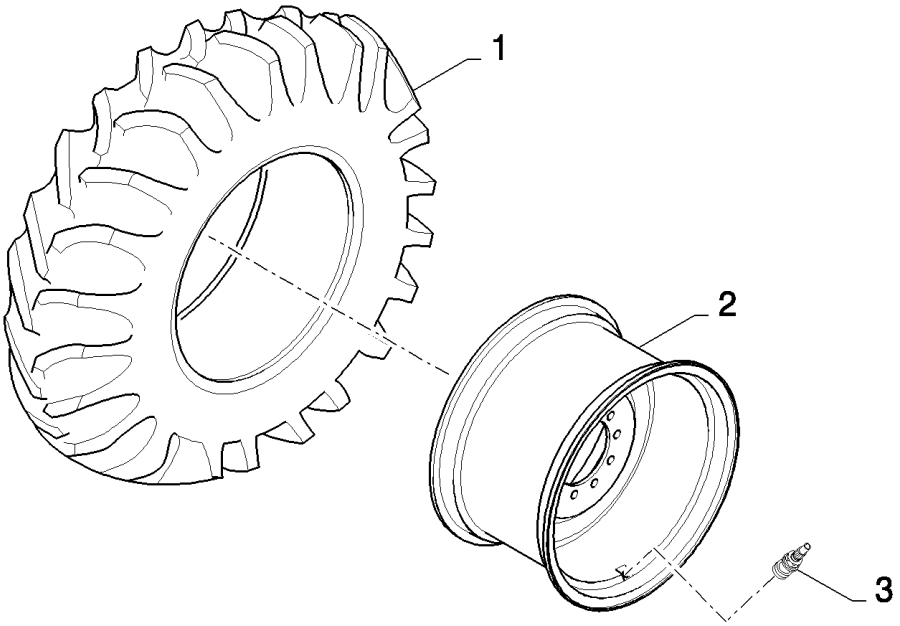

CSX7080 C659 - COMBINE (9/06-8/08)

11.228(01) STEERING WHEELS : 14.9R24-150A8-A-356 (-95)

ссылка	Номер детали	Кол-во	Описание
1	87328726	2	TYRE/TIRE,
2	87549898	2	RIM,
3	395448	2	VALVE STEM,

11.231(01) TRACTION WHEELS : 1050/50R32-178A8

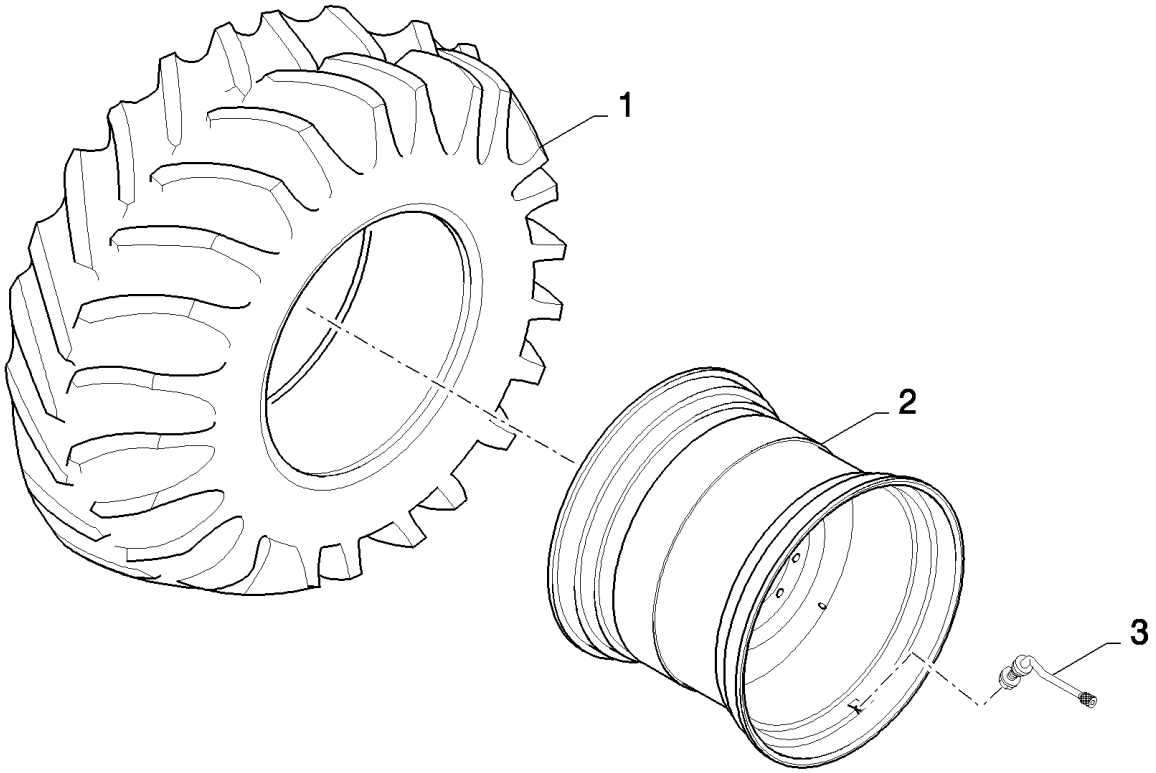

CSX7080 C659 - COMBINE (9/06-8/08)

11.231(01) TRACTION WHEELS : 1050/50R32-178A8

ссылка	Номер детали	Кол-во	Описание
1	84100135	2	TYRE/TIRE,
2	84989723	2	RIM,
3	84460168	2	VALVE STEM,

11.233(01) TRACTION WHEELS

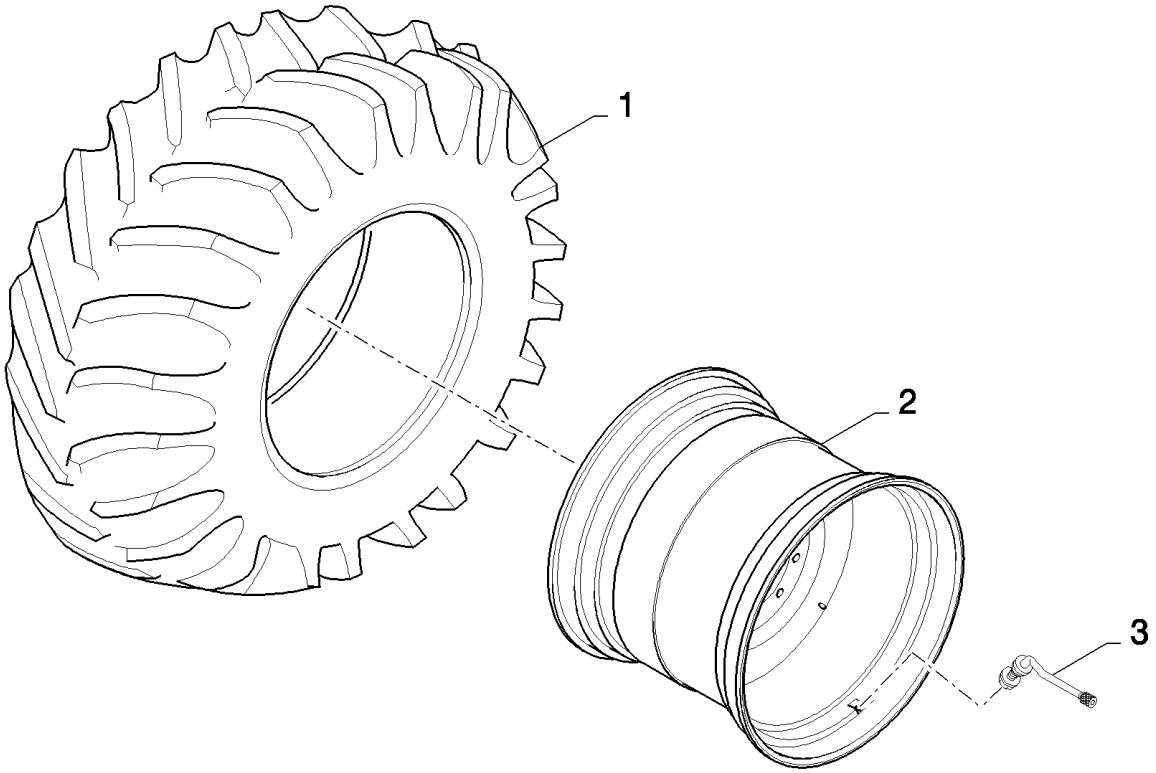

CSX7080 C659 - COMBINE (9/06-8/08)

11.233(01) TRACTION WHEELS

ссылка	Номер детали	Кол-во	Описание
1	84068561	2	TYRE/TIRE,
2	84429218	2	RIM,
3	84460168	2	VALVE STEM,

11.235(01) TRACTION WHEELS : 620/75R34-170A8 (38) - FOR LATERALE ONLY

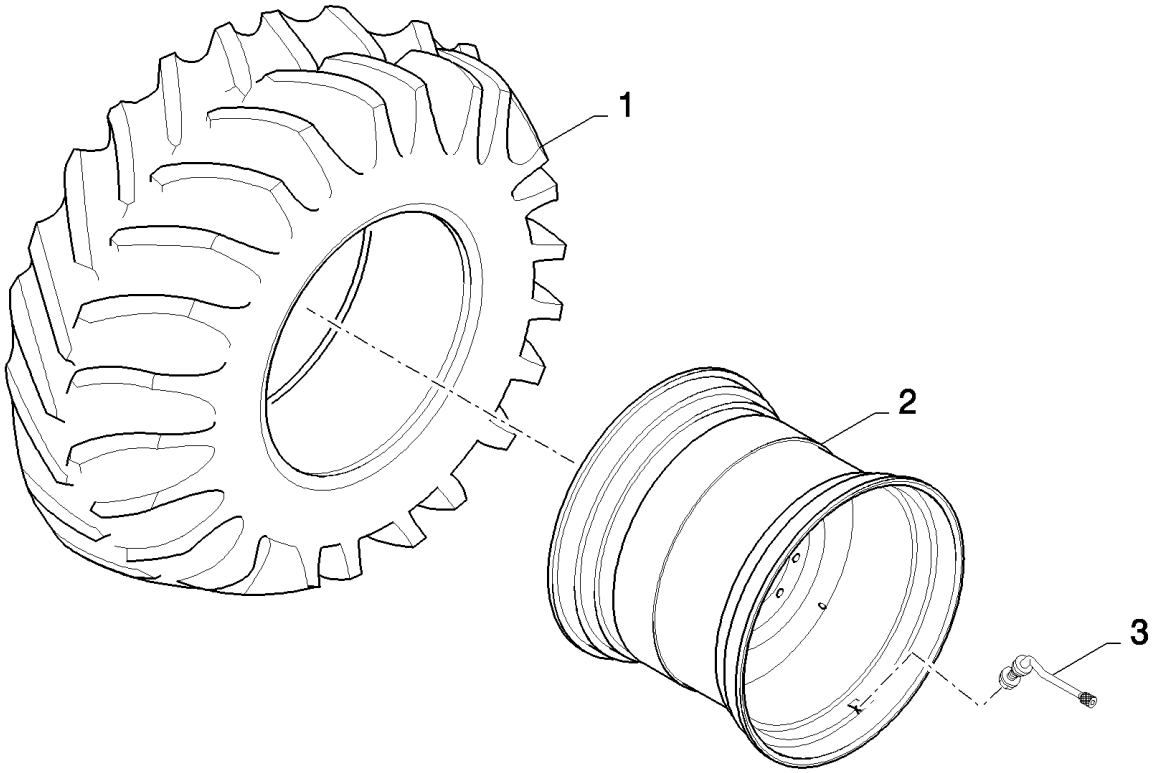

CSX7080 C659 - COMBINE (9/06-8/08)

11.235(01) TRACTION WHEELS : 620/75R34-170A8 (38) - FOR LATERALE ONLY

ссылка	Номер детали	Кол-во	Описание
1	84036030	2	TYRE/TIRE,
2	84457054	2	RIM,
3	84460168	2	VALVE STEM,

11.236(01) STEERING WHEELS : 14.9R24-150A8-A-356 (-70) - FOR LATERALE ONLY

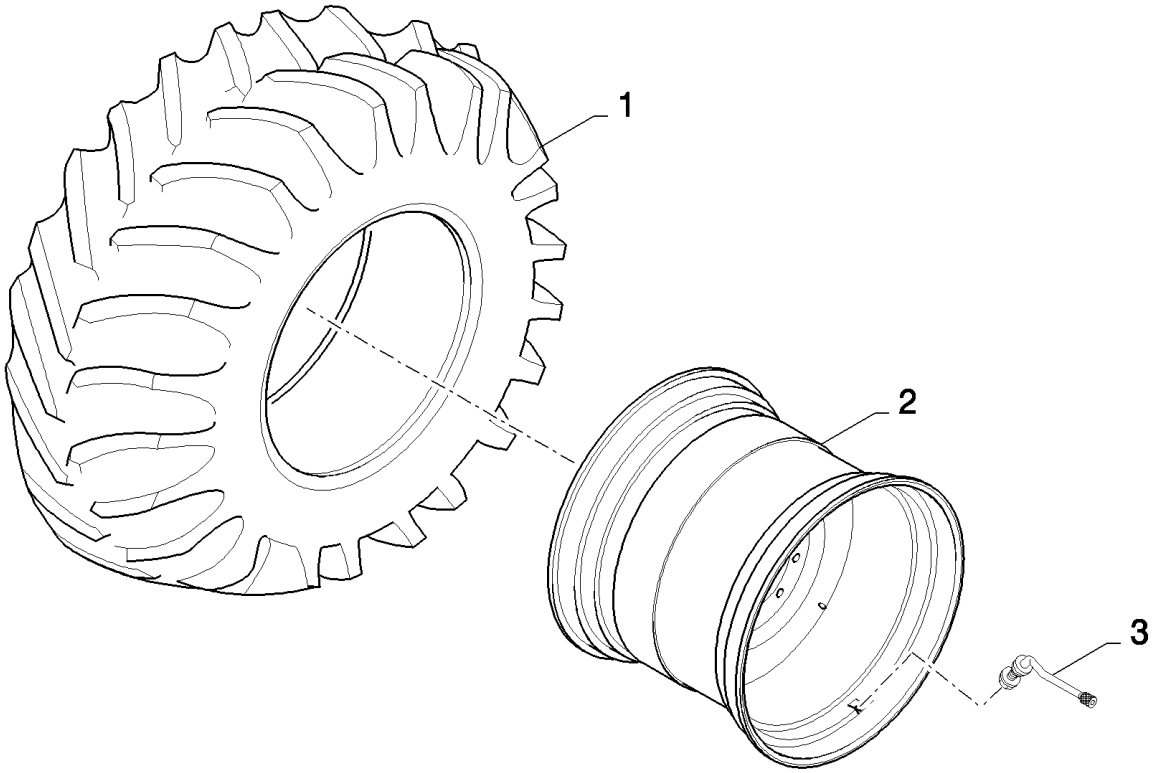

CSX7080 C659 - COMBINE (9/06-8/08)

11.236(01) STEERING WHEELS : 14.9R24-150A8-A-356 (-70) - FOR LATERALE ONLY

ссылка	Номер детали	Кол-во	Описание
1	87328726	2	TYRE/TIRE,
2	87549898	2	RIM,
3	395448	2	VALVE STEM,

MAIN FRAME	**CHÂSSIS PRINCIPAL**	**BASTIDOR PRINCIPAL**	**HOVEDRAMME**
TELAIO PRINCIPALE	**HAUPTGESTELL**	**ESTRUTURA PRINCIPAL**	**HOOFDRAAM**

SEC. 12

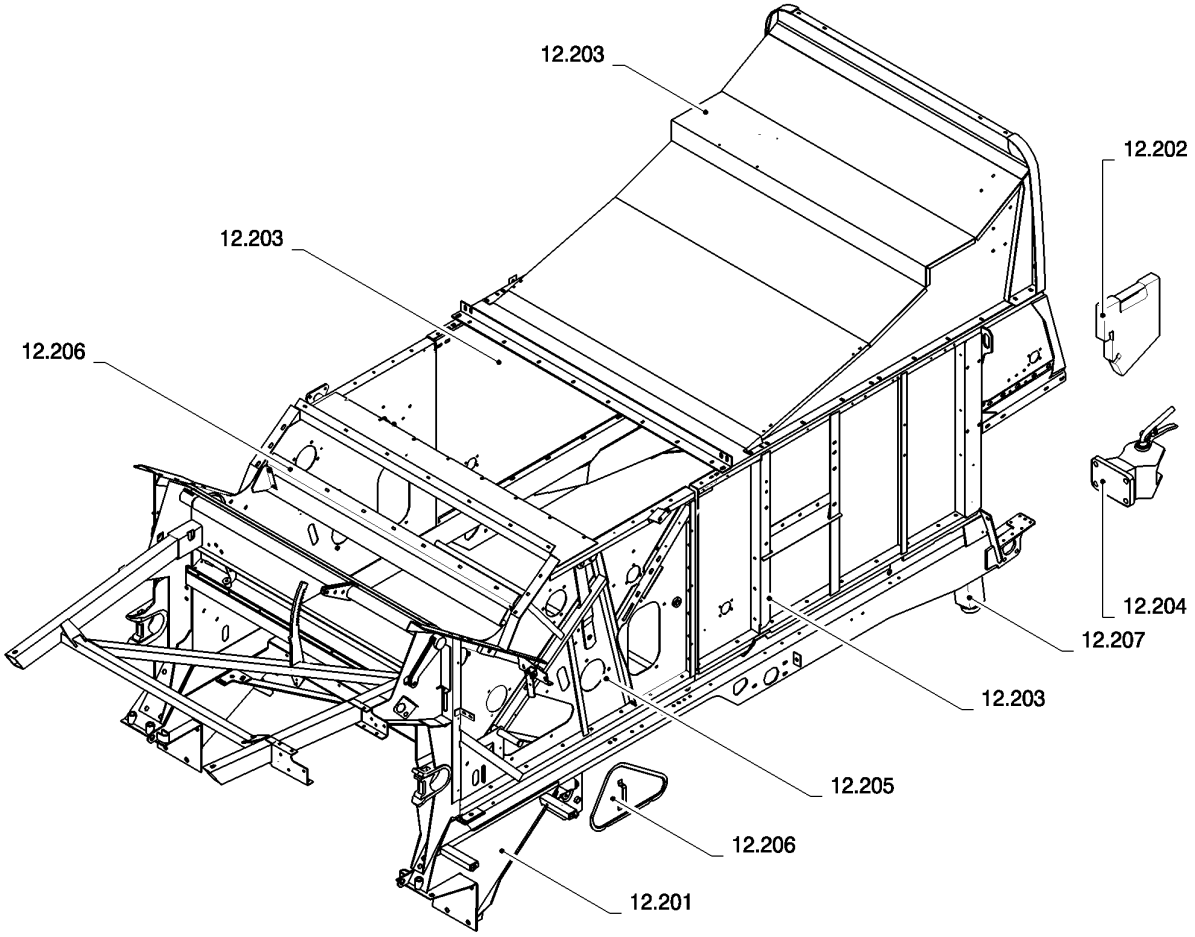

ссылка	Номер детали	Кол-во	Описание

12.201(A 01) LOWER FRAME, FIXED SHOE

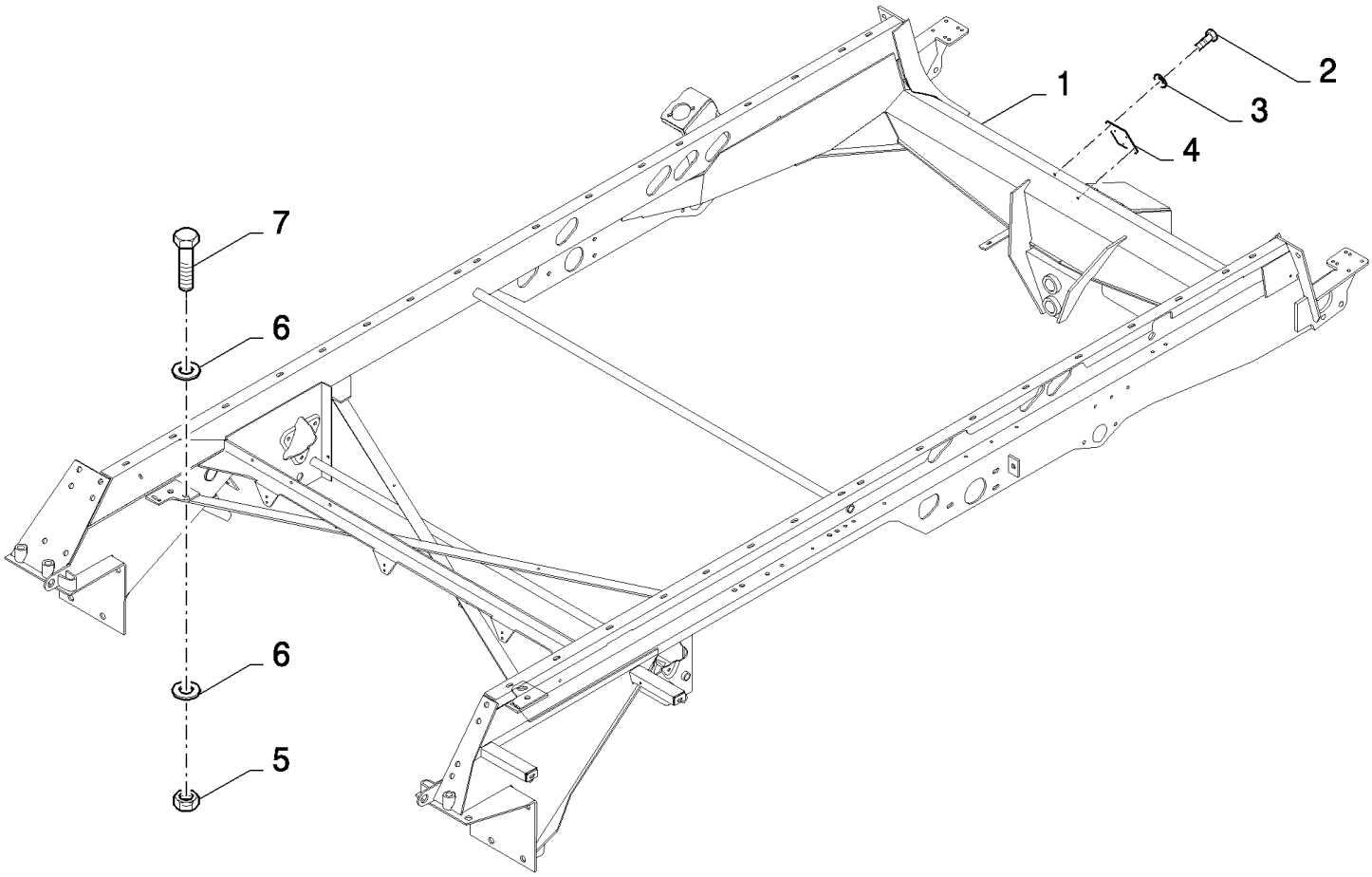

CSX7080 C659 - COMBINE (9/06-8/08)

12.201(A 01) LOWER FRAME, FIXED SHOE

ссылка	Номер детали	Кол-во	Описание
1	84462969	1	FRAME,
2	120104	2	SCREW, Hex, M8 x 20, 8.8,
3	322358	2	WASHER, SPRING, Belleville, M8,
4	84989533	1	PLATE,
5	100020	4	NUT, M16, Cl 8,
6	333040	8	WASHER, 16MM
7	120090	4	SCREW, Hex, M16 x 50, 8.8,

12.201(B 01) LOWER FRAME - FOR LATERALE ONLY

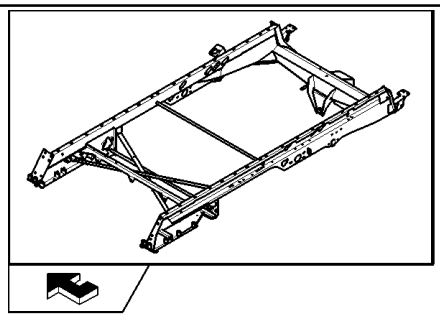

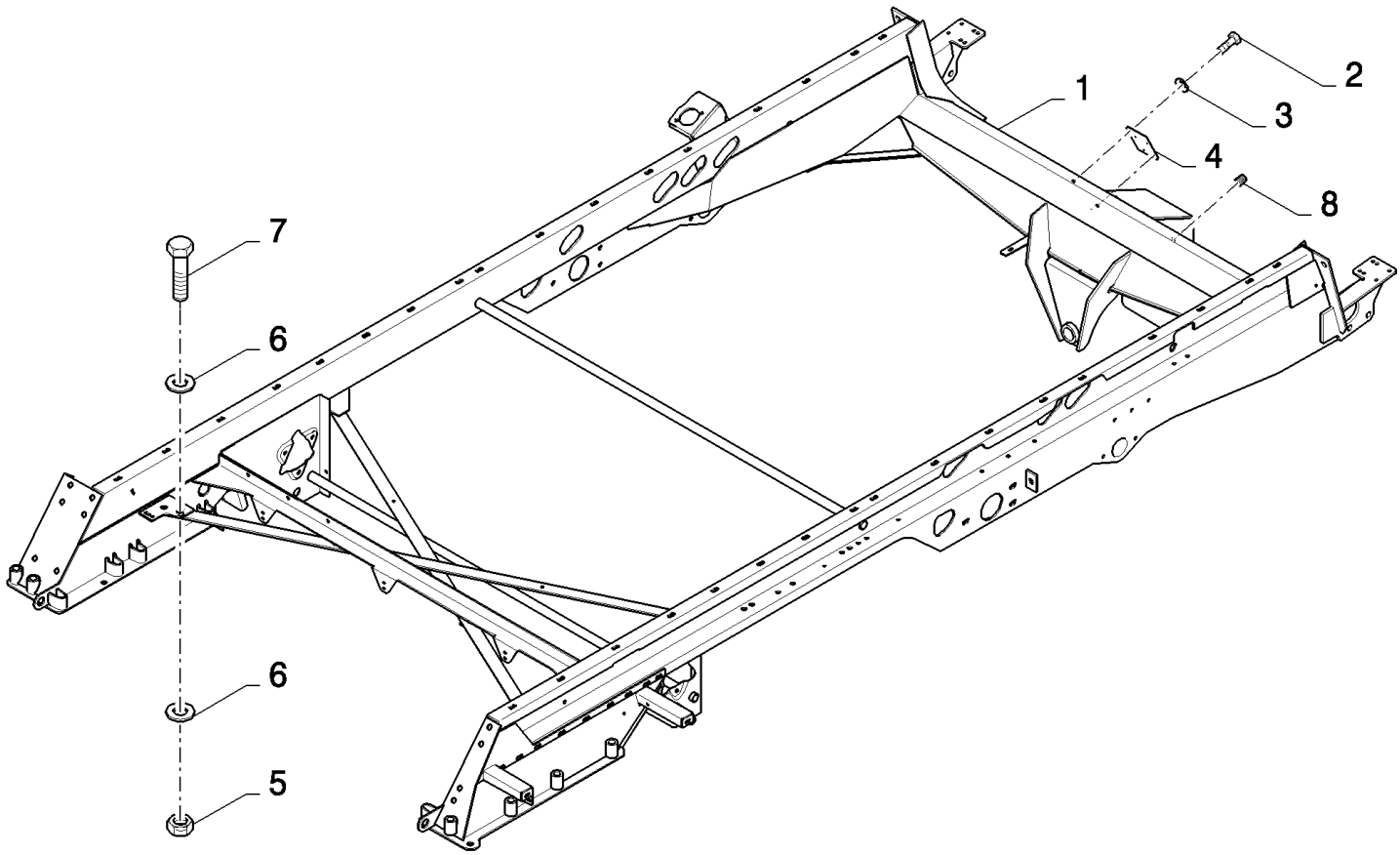

CSX7080 C659 - COMBINE (9/06-8/08)

12.201(B 01) LOWER FRAME - FOR LATERALE ONLY

ссылка	Номер детали	Кол-во	Описание
1	87545748	1	FRAME, , FOR CSX7080 ONLY
1	87545749	1	FRAME, , FOR CSX7060 ONLY
2	120104	2	SCREW, Hex, M8 x 20, 8.8,
3	322358	2	WASHER, SPRING, Belleville, M8,
4	84989533	1	PLATE,
5	100020	4	NUT, M16, Cl 8,
6	333040	8	WASHER,
7	120090	4	SCREW, Hex, M16 x 50, 8.8,
8	9513759	1	PLUG, , BSN C615

12.202(A 01) COUNTERWEIGHTS, SUPPORT

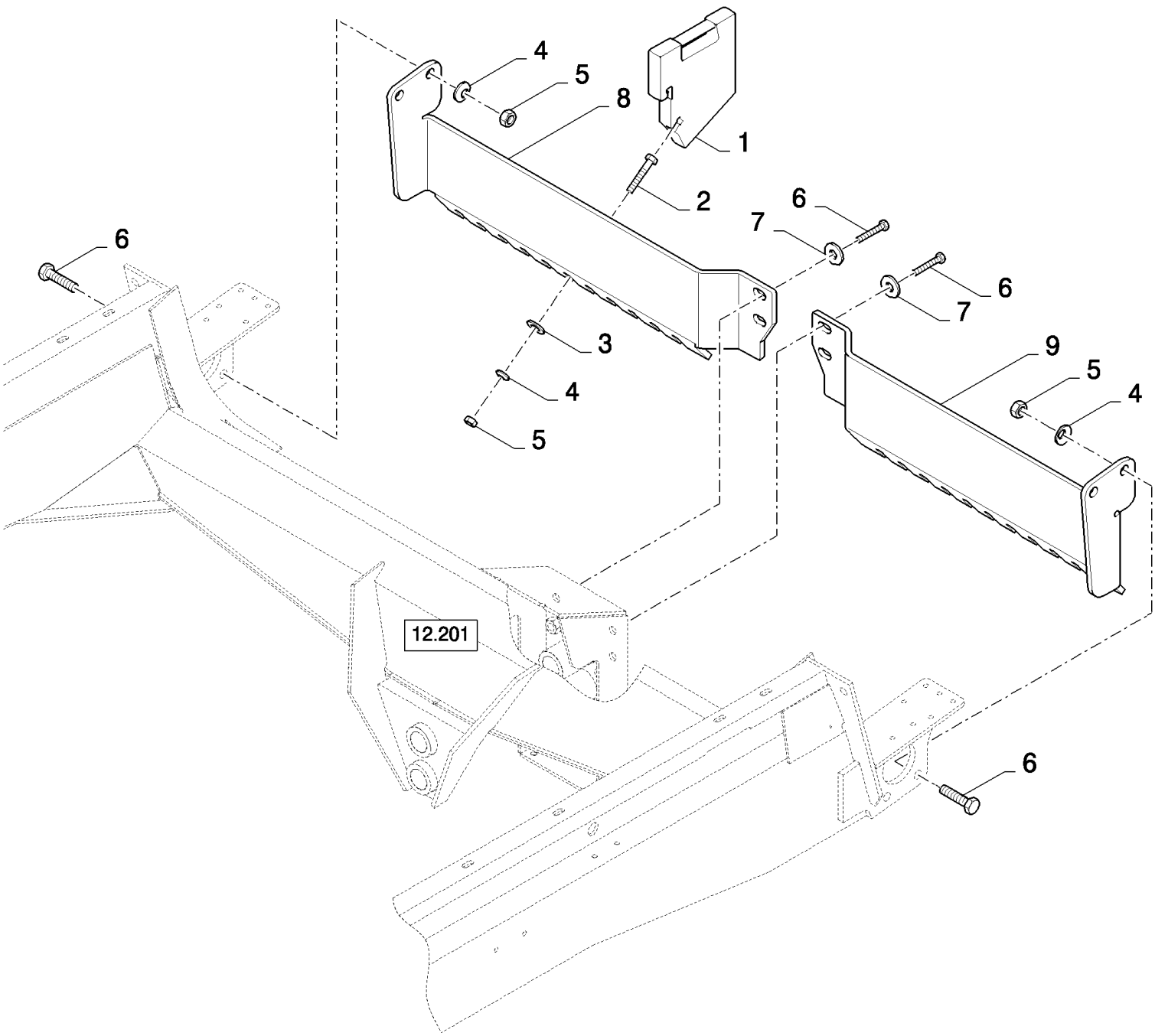

CSX7080 C659 - COMBINE (9/06-8/08)

12.202(A 01) COUNTERWEIGHTS, SUPPORT

ссылка	Номер детали	Кол-во	Описание
1	84435924	AR	WEIGHT, ADVANCE DEVICE,
2	120092	AR	SCREW, Hex, M16 x 70, 8.8,
3	451743	AR	WASHER, 16MM
4	140048	AR	WASHER, SPRING, Belleville, M16,
5	100020	AR	NUT, M16, Cl 8,
6	385922	8	SCREW, Hex, M16 x 45, 8.8,
7	394631	4	WASHER, 17MM
8	84438689	1	SUPPORT,
9	84437767	1	SUPPORT,

12.203(A 01) STRAW WALKER, FRAME

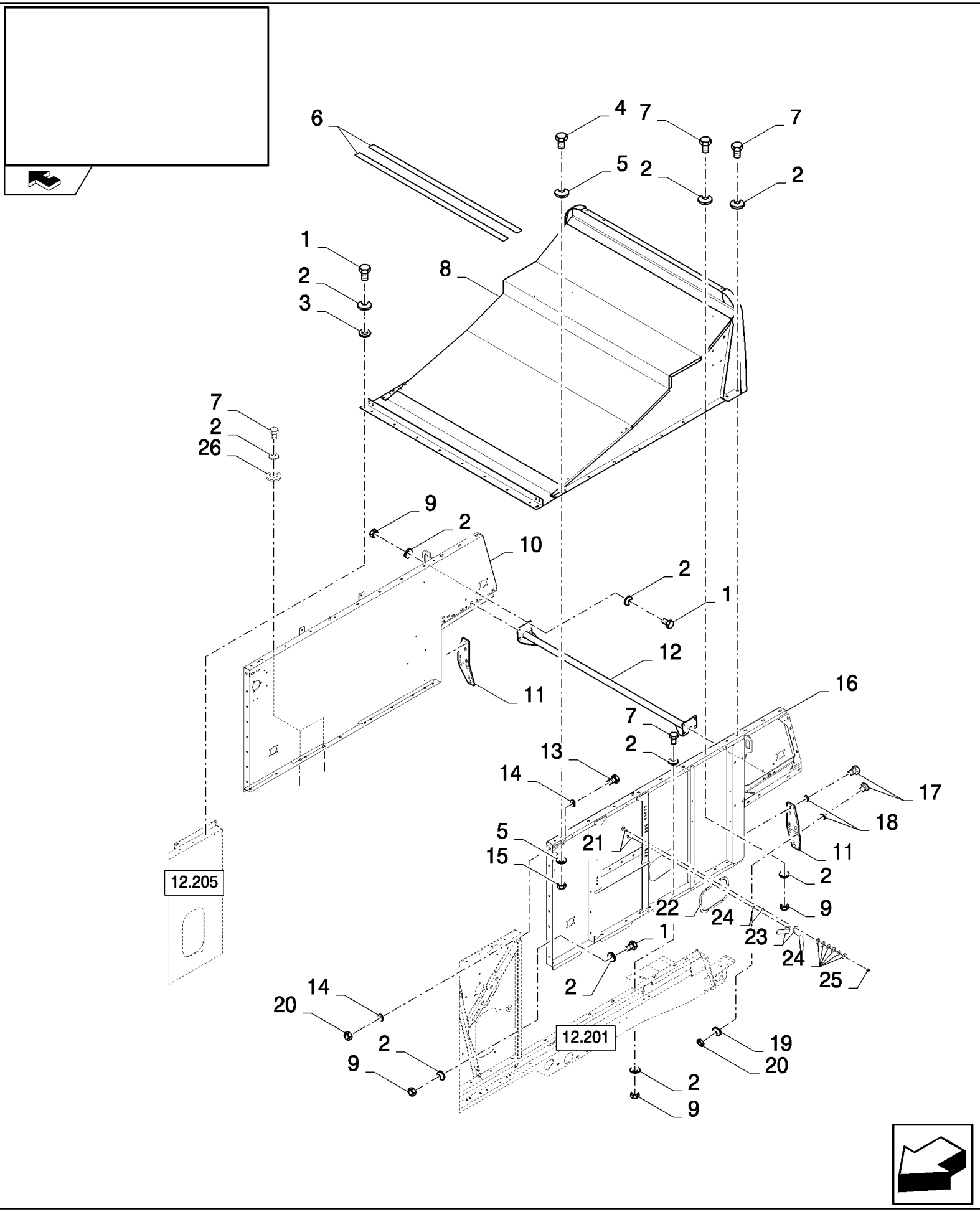

CSX7080 C659 - COMBINE (9/06-8/08)

12.203(A 01) STRAW WALKER, FRAME

ссылка	Номер детали	Кол-во	Описание
1	43140	24	BOLT, Hex, M10 x 30, 8.8, Full Thd,
2	140045	94	WASHER, SPRING, Belleville, M10, , BSN C547
2	140045	92	WASHER, SPRING, Belleville, M10, , ASN D548
3	140042	2	WASHER, M10 x 34 x 3,
4	43127	2	BOLT, Hex, M8 x 25, 8.8,
5	322358	4	WASHER, SPRING, Belleville, M8,
6	401502	2	STRIP, ANTI-SKID, L=3M
7	43139	25	SCREW, Hex, M10 x 25, 8.8, Full Thd, M10x25
8	84076858	1	FRAME,
9	100016	45	NUT, M10, Cl 8, , BSN C547
9	100016	43	NUT, M10, Cl 8, , ASN D548
10	84076813	1	FRAME, , BSN C547
10	87362964	1	PANEL, SIDE, , ASN D548
11	84438859	2	PLATE,
12	84076772	1	SUPPORT,
13	86508586	2	BOLT, Hex, M16 x 240, 8.8,
14	333041	4	WASHER,
15	9706690	2	NUT, M8, Cl 8,
16	84076920	1	FRAME, , BSN C547
16	87362892	1	PANEL, SIDE, , ASN D548
17	385922	12	SCREW, Hex, M16 x 45, 8.8,
18	84058945	12	WASHER,
19	140048	2	WASHER, SPRING, Belleville, M16,
20	100020	4	NUT, M16, Cl 8,
21	308761	2	BOLT, CARRIAGE, Short NK, M8 x 25, Cl8.8, Full Thd,
22	84320078	1	COVER,
23	84432243	2	CLIP,
24	300367	14	WASHER,
25	86629542	2	NUT, LOCK, M8 x 1.25, Cl 8,
26	86592712	2	WASHER, , ASN D548

12.204(01) HITCH

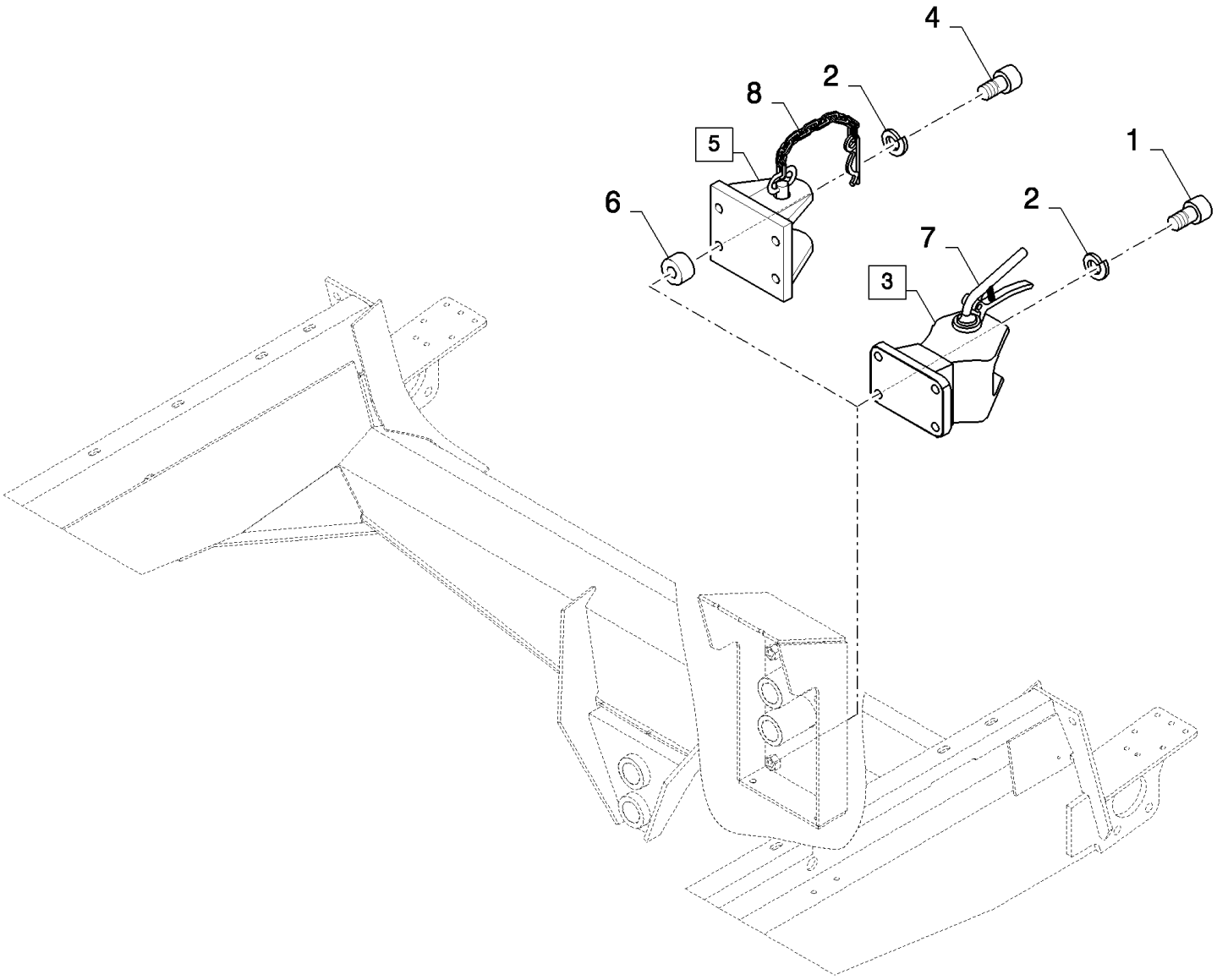

CSX7080 C659 - COMBINE (9/06-8/08)

12.204(01) HITCH

ссылка	Номер детали	Кол-во	Описание
1	9817243	4	SCREW, Hex Soc Hd, M16 x 50, 12.9, Cap, HS, CL 12.9, M16 x 2 x 50
2	86729275	8	WASHER, LOCK, 5/8",
3	84607012	1	TOW HOOK, (7)
4	9838120	4	SCREW,
5	84400985	1	HITCH, (8)
6	355392	4	SPACER,
7	84801725	1	PIN, HITCH,
8	84817651	1	PIN, HITCH,

CSX7080 C659 - COMBINE (9/06-8/08)

12.204(A 01) HITCH - FOR LATERALE ONLY

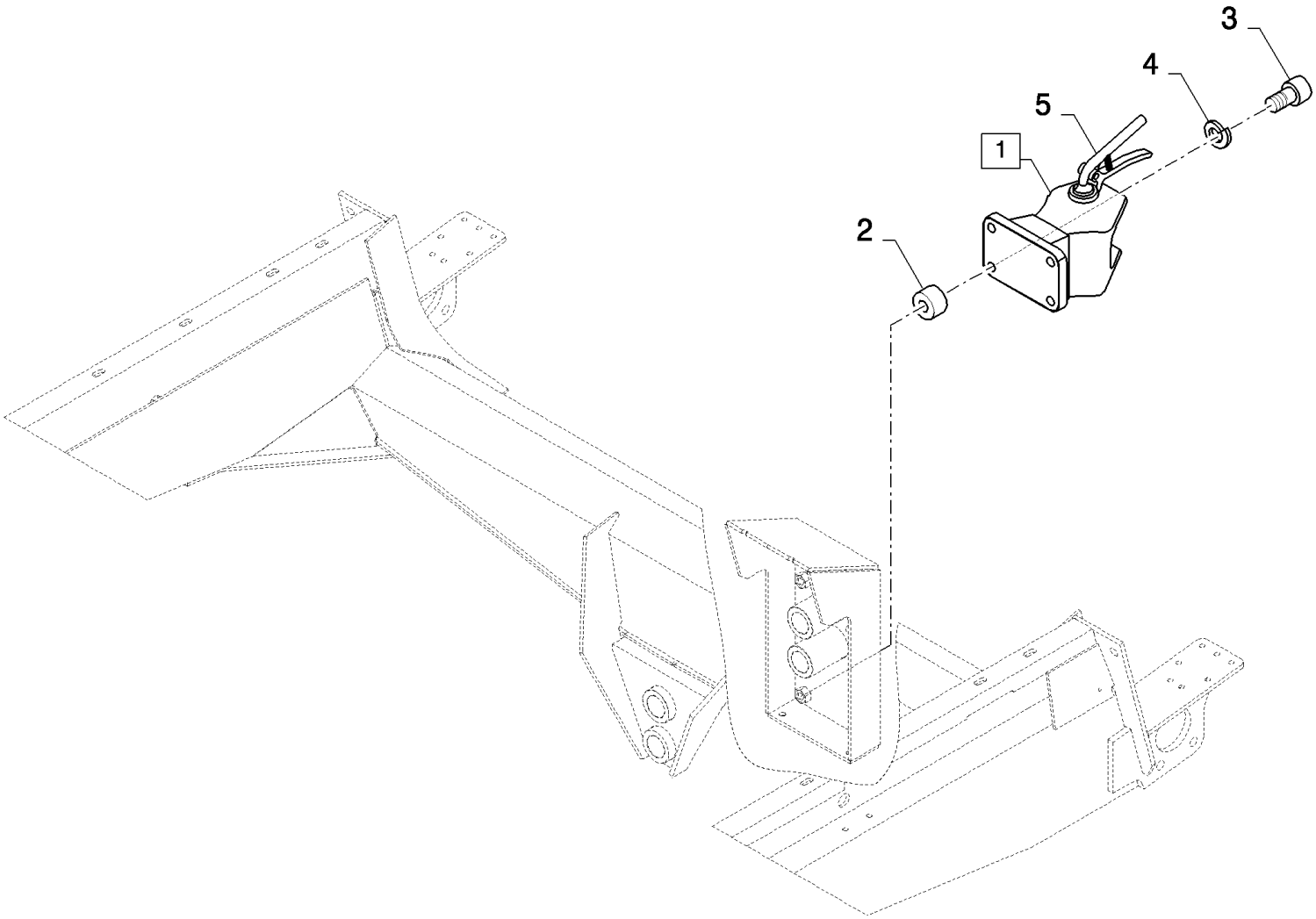

CSX7080 C659 - COMBINE (9/06-8/08)

12.204(A 01) HITCH - FOR LATERALE ONLY

ссылка	Номер детали	Кол-во	Описание
1	84607012	1	TOW HOOK, (5)
2	355392	4	SPACER,
3	9838120	4	SCREW,
4	86729275	4	WASHER, LOCK, 5/8",
5	84801725	1	PIN, HITCH,

12.205(B 01) FRAME, THRESHING - WITH ROTARY SEPARATOR

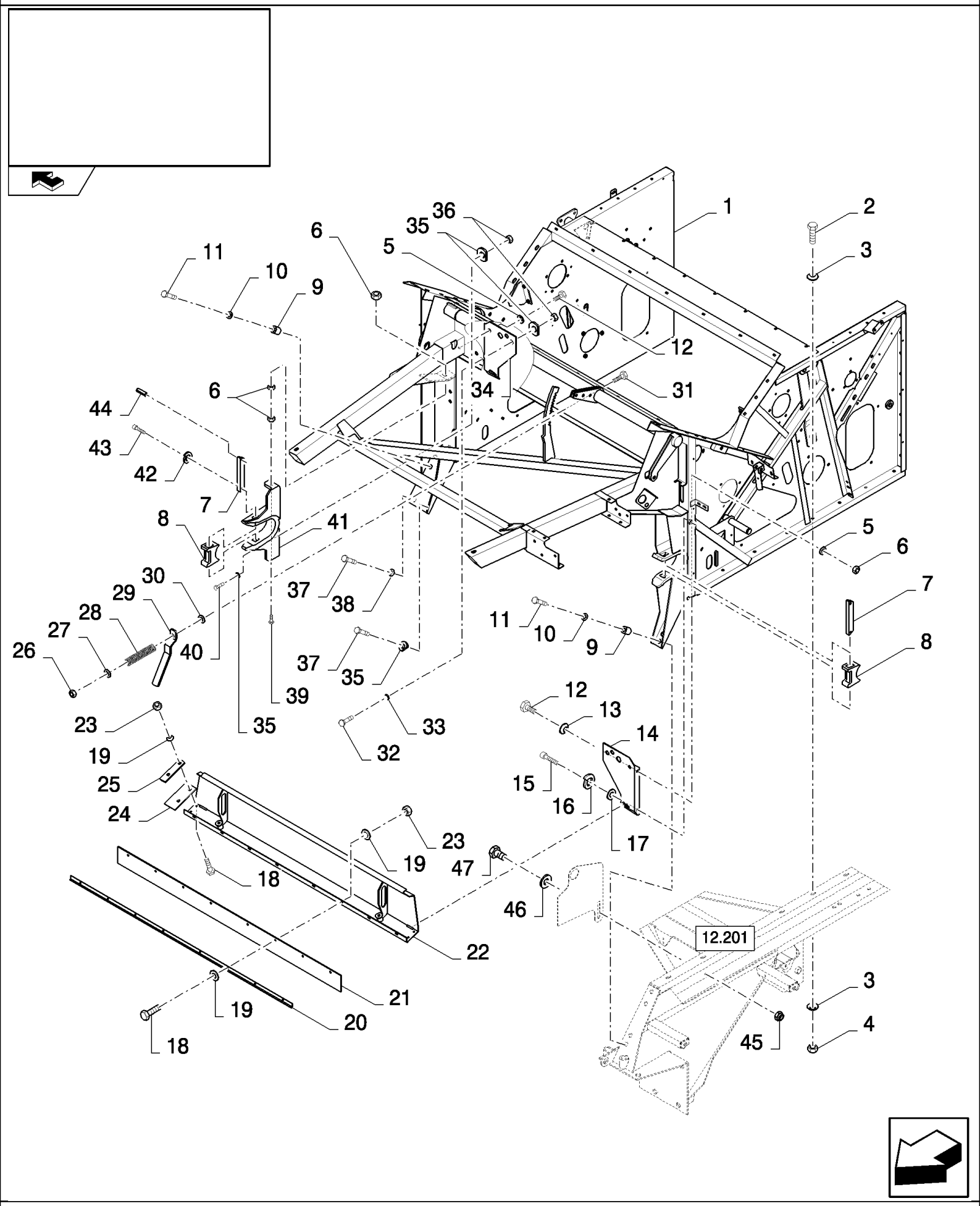

CSX7080 C659 - COMBINE (9/06-8/08)

12.205(B 01) FRAME, THRESHING - WITH ROTARY SEPARATOR

ссылка	Номер детали	Кол-во	Описание
1	84076484	1	FRAME,
2	43140	12	BOLT, Hex, M10 x 30, 8.8, Full Thd,
3	140045	8	WASHER, SPRING, Belleville, M10,
4	100016	12	NUT, M10, Cl 8,
5	140046	4	WASHER, Belleville, M12,
6	9706685	5	NUT, M12, Cl 8,
7	9509745	2	BRACKET,
8	84100382	2	CLAMP,
9	84073777	8	BUSHING,
10	394631	8	WASHER, 16MM
11	120093	8	BOLT, Hex, M16 x 80, 8.8,
12	9706687	4	SCREW, Hex, M12 x 30, 8.8,
13	140018	2	WASHER, M12 x 24 x 2.5,
14	84075281	1	PLATE, LH
15	86512143	2	SCREW, Hex Soc Hd, M12 x 70, 12.9, M12x70
16	412123	2	WASHER, M12,
17	140084	2	WASHER, 12MM
18	120100	12	BOLT, Hex, M6 x 20, 8.8,
19	322357	22	WASHER, SPRING, Belleville, M6,
20	390374	1	PLATE, FIXING,
21	84818316	1	STRIP, RUBBER,
22	84075272	1	COVER,
23	353308	12	NUT, M6 x 1, Cl 8,
24	84075149	2	CANVAS,
25	84075180	2	PLATE, FIXING,
26	412141	3	NUT, LOCK, M10 x 1.5, Cl 8,
27	378244	3	WASHER, M10,
28	539991	3	SPRING,
29	84434366	3	LEVER,
30	140042	3	WASHER, M10 x 34 x 3,
31	120073	3	BOLT, Hex, M10 x 80, 8.8,
32	43167	4	BOLT, Hex, M16 x 30, 8.8, Full Thd,
33	140048	4	WASHER, SPRING, Belleville, M16,
34	84075282	1	PLATE, RH
35	333041	13	WASHER, 16MM
36	100020	8	NUT, M16, Cl 8,
37	43168	2	BOLT, Hex, M16 x 40, 8.8,
38	333040	1	WASHER, 16MM
39	120124	1	BOLT, Hex, M12 x 90, 8.8,
40	120090	4	SCREW, Hex, M16 x 50, 8.8,
41	84073329	1	SUPPORT,
42	80681	2	WASHER, LOCK, 5/16",
43	9706749	2	SCREW, Hex Soc Hd, M8 x 25, 12.9, M8x25
44	9512583	2	PIN, LOCK, M10 x 30, Slotted,

12.205(B 01) FRAME, THRESHING - WITH ROTARY SEPARATOR

ссылка	Номер детали	Кол-во	Описание
45	86629542	2	NUT, LOCK, M8 x 1.25, Cl 8,
46	378243	2	WASHER, M8,
47	120104	2	SCREW, Hex, M8 x 20, 8.8,

12.206(B 01) FRAME, THRESHING - WITH ROTARY SEPARATOR

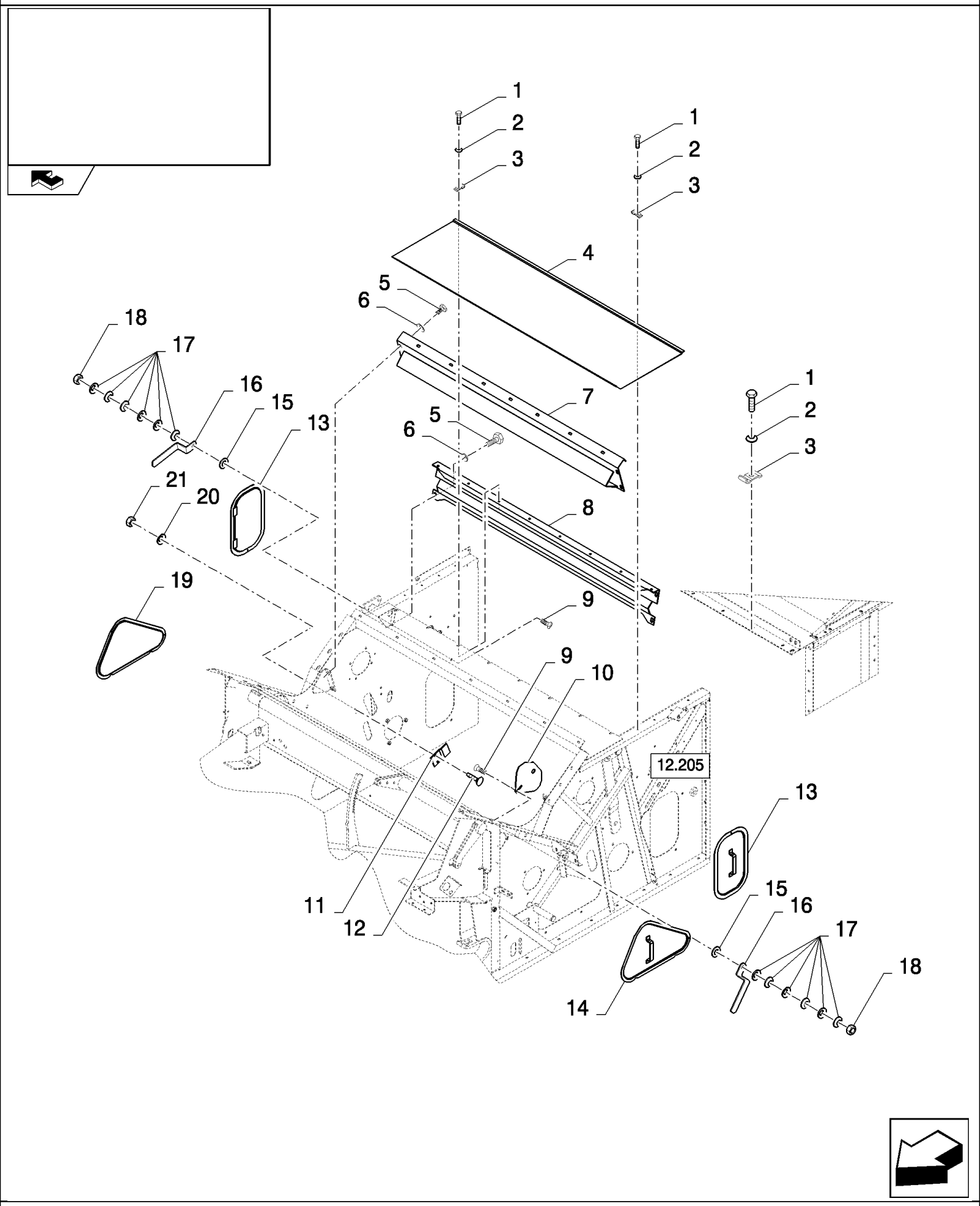

CSX7080 C659 - COMBINE (9/06-8/08)

12.206(B 01) FRAME, THRESHING - WITH ROTARY SEPARATOR

ссылка	Номер детали	Кол-во	Описание
1	43128	22	BOLT, Hex, M8 x 30, 8.8,
2	322358	22	WASHER, SPRING, Belleville, M8,
3	425093	22	CLIP,
4	84432488	1	COVER,
5	43138	8	SCREW, Hex, M10 x 20, 8.8, Full Thd,
6	140045	AR	WASHER, SPRING, Belleville, M10,
7	84073577	1	PLATE,
8	84460679	1	PLATE,
9	308761	12	BOLT, CARRIAGE, Short NK, M8 x 25, Cl8.8, Full Thd,
10	84443839	1	PLATE, COVER,
11	84075668	1	BRACKET,
12	86512439	2	SCREW, Short NK, M6 x 16, Cl8.8, Full Thd,
13	84073215	2	COVER,
14	84073222	1	COVER,
15	378243	12	WASHER, M8,
16	84432243	12	CLIP,
17	300367	72	WASHER, 8MM
18	86629542	12	NUT, LOCK, M8 x 1.25, Cl 8,
19	84073225	1	COVER,
20	322357	2	WASHER, SPRING, Belleville, M6,
21	9706755	2	NUT, M6, Cl 8,

12.207(A 01) PIVOTING RESTRICTIONS FOR STEERING VALVE

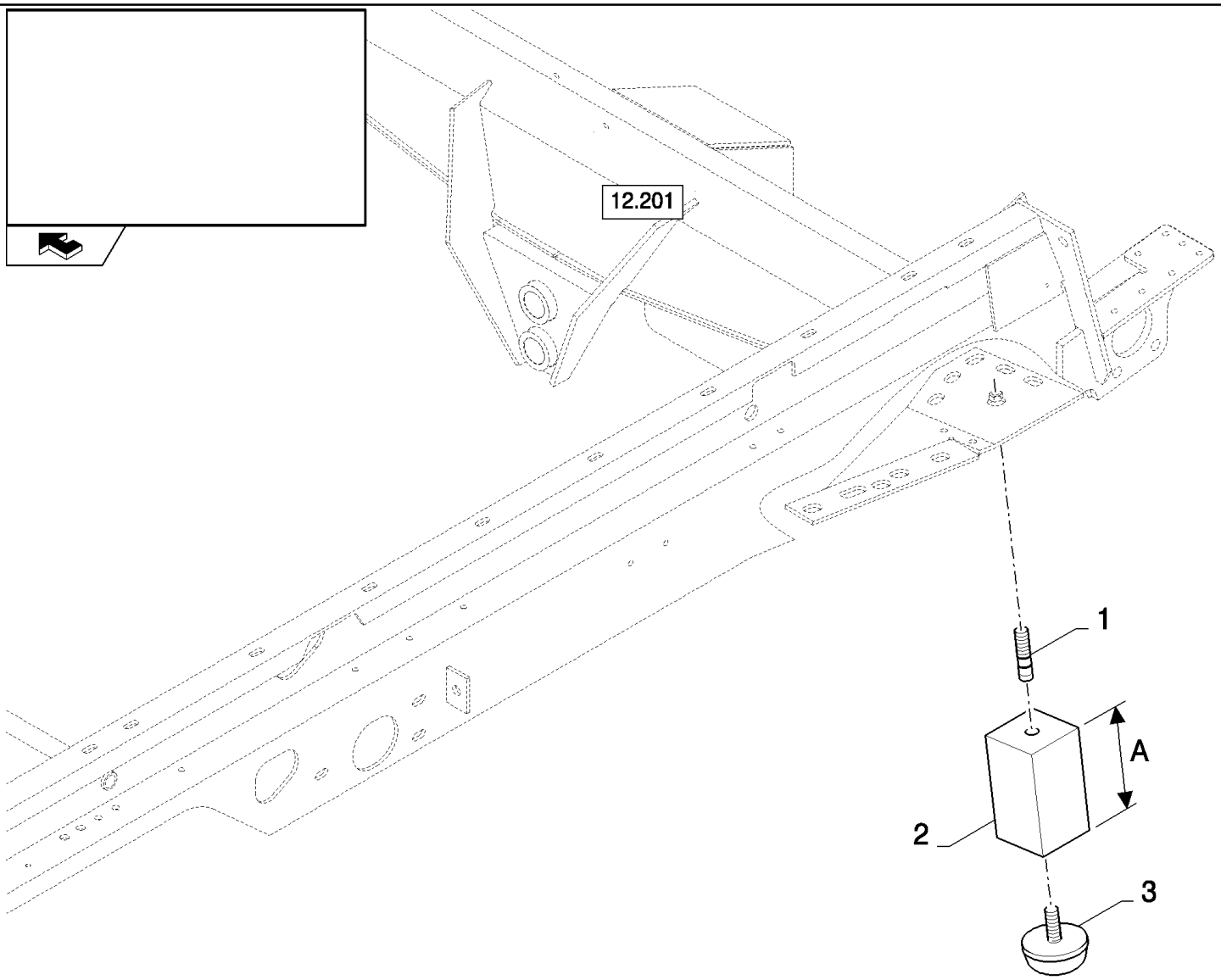

CSX7080 C659 - COMBINE (9/06-8/08)

12.207(A 01) PIVOTING RESTRICTIONS FOR STEERING VALVE

ссылка	Номер детали	Кол-во	Описание
1	412593	2	BOLT,
2	417299	2	STOP, A=90MM
3	190029	2	INSULATOR BLOCK,

12.207(C 01) PIVOTING RESTRICTIONS FOR STEERING VALVE

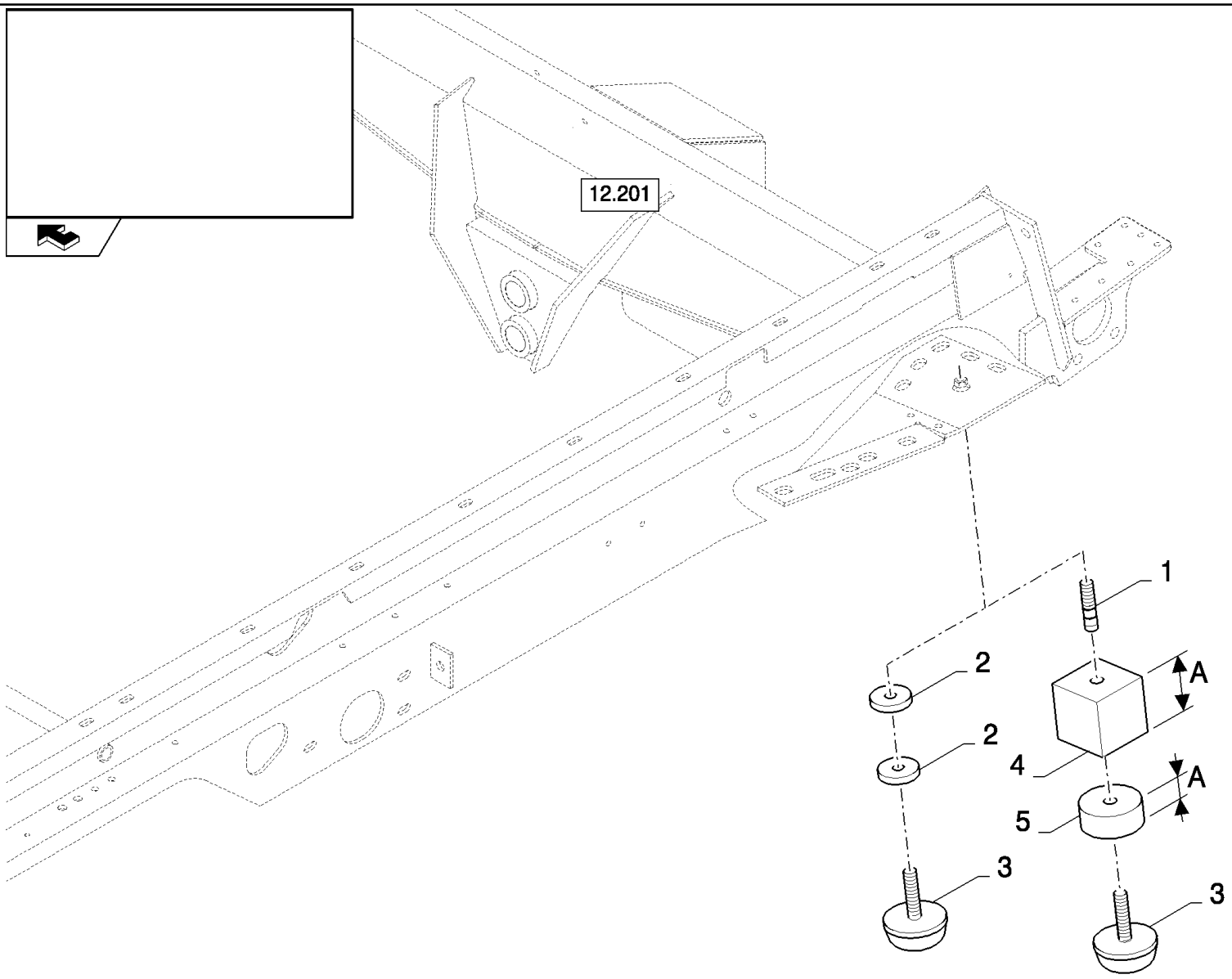

CSX7080 C659 - COMBINE (9/06-8/08)

12.207(C 01) PIVOTING RESTRICTIONS FOR STEERING VALVE

ссылка	Номер детали	Кол-во	Описание
1	412593	2	BOLT,
2	140083	4	WASHER,
3	84440416	2	INSULATOR BLOCK,
4	916866	2	SPACER, A=50MM
5	84018917	2	BUSHING, A=20MM

12.207(E 01) PIVOTING RESTRICTIONS FOR STEERING VALVE - FOR LATERALE ONLY

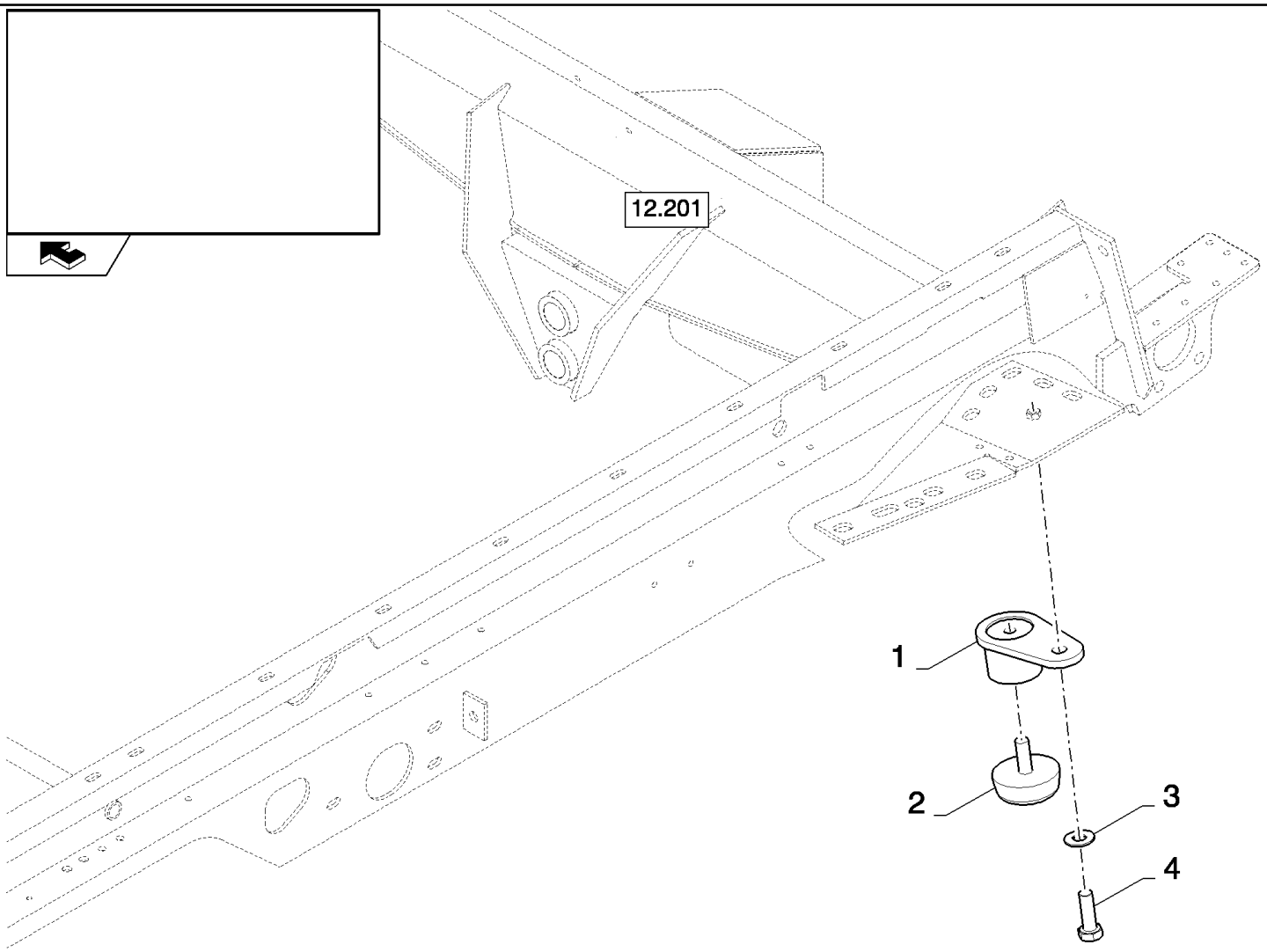

CSX7080 C659 - COMBINE (9/06-8/08)

12.207(E 01) PIVOTING RESTRICTIONS FOR STEERING VALVE - FOR LATERALE ONLY

ссылка	Номер детали	Кол-во	Описание
1	87549896	2	SUPPORT,
2	190029	2	INSULATOR BLOCK,
3	140045	2	WASHER, SPRING, Belleville, M10,
4	43140	2	BOLT, Hex, M10 x 30, 8.8, Full Thd,

STRAW ELEVATOR	ELEVATEUR DE PAILLE	ELEVADOR DE PAJA	HALMELEVATOR
CANALE ELEVATORE PAGLIA	STROHFÖRDERER	ELEVADOR DE PALHA	STRO-ELEVATOR

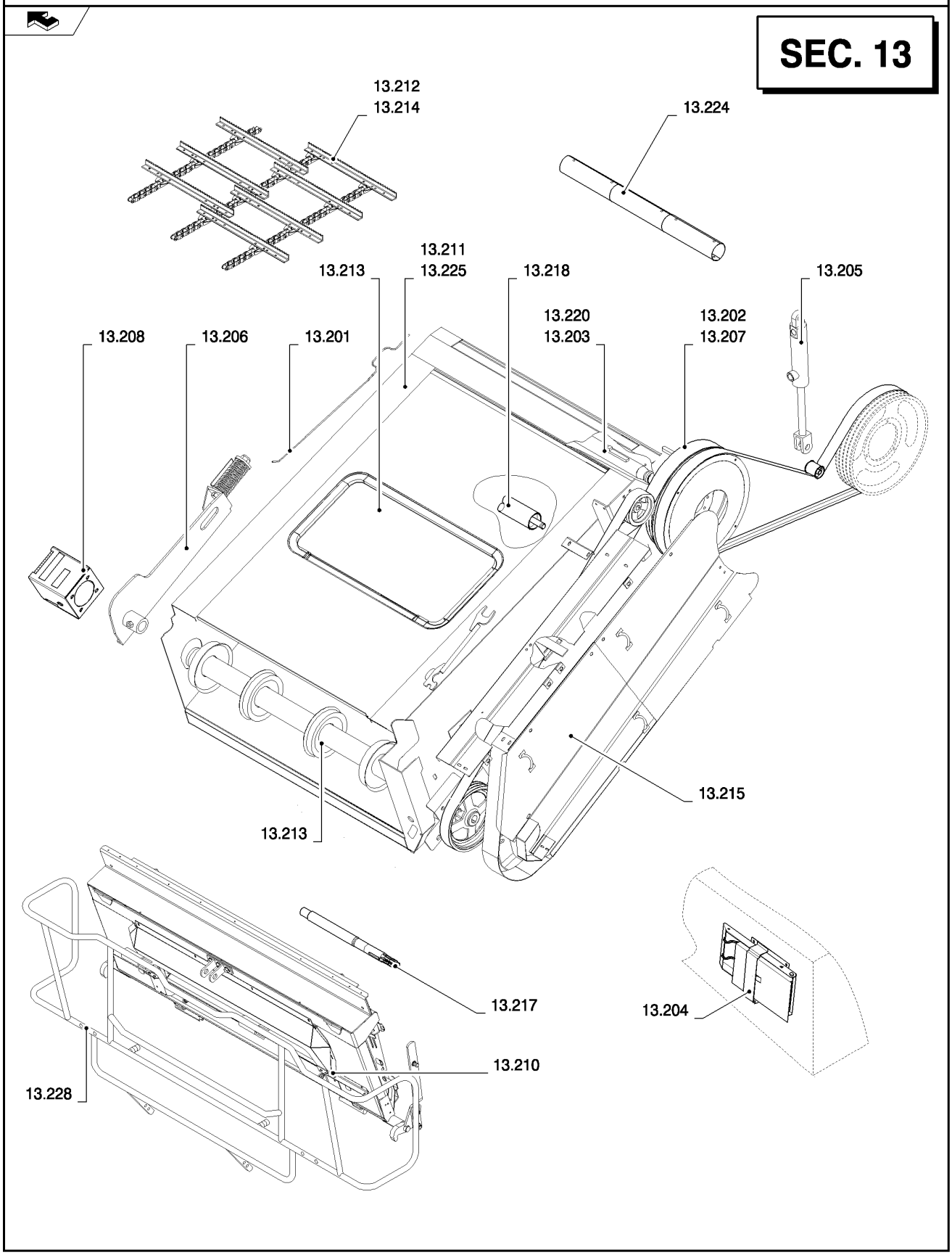

ссылка	Номер детали	Кол-во	Описание

STRAW ELEVATOR	**ELEVATEUR DE PAILLE**	**ELEVADOR DE PAJA**	**HALMELEVATOR**
CANALE ELEVATORE PAGLIA	**STROHFÖRDERER**	**ELEVADOR DE PALHA**	**STRO-ELEVATOR**

SEC. 13

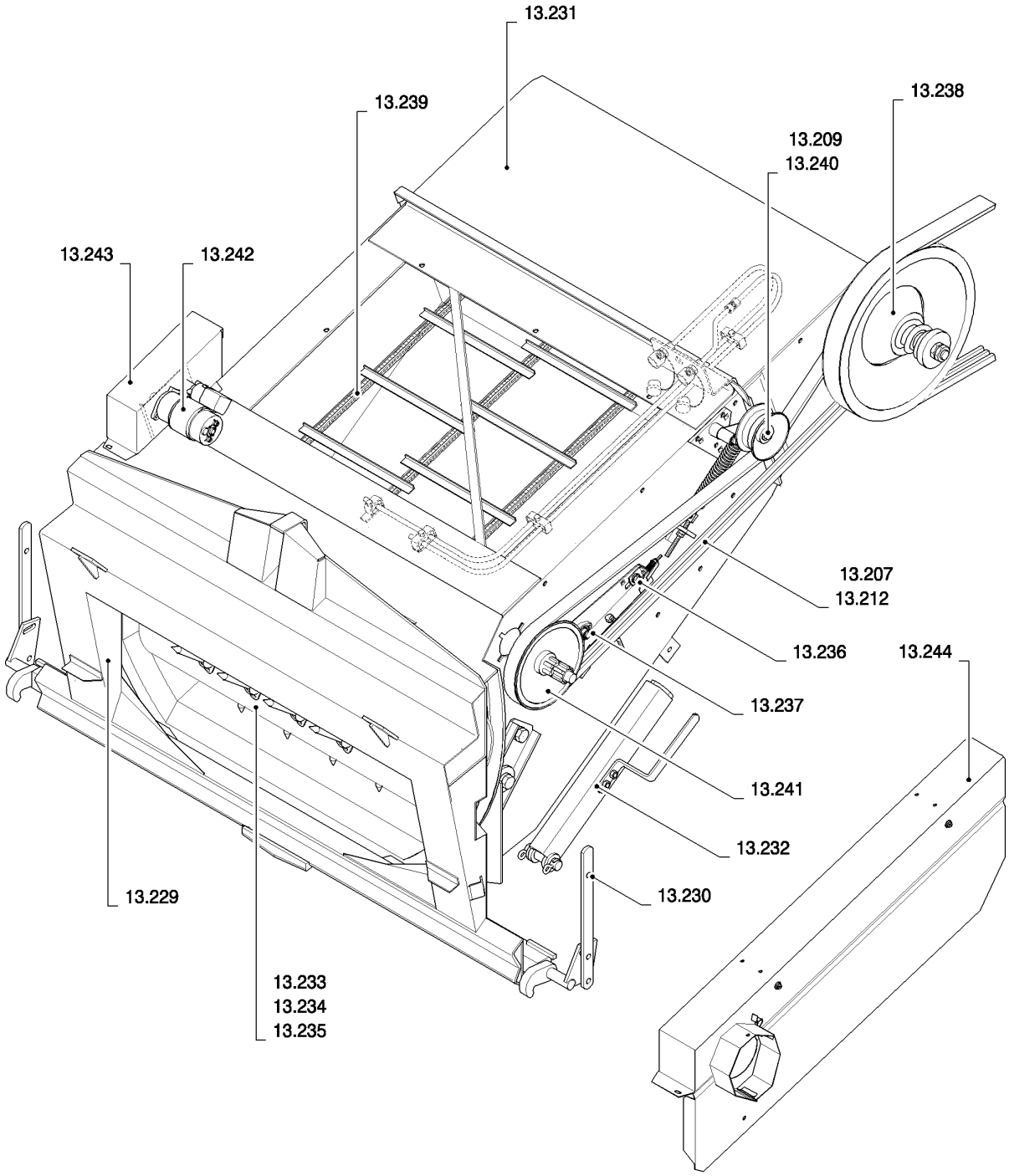

ссылка	Номер детали	Кол-во	Описание

STRAW ELEVATOR	**ELEVATEUR DE PAILLE**	**ELEVADOR DE PAJA**	**HALMELEVATOR**
CANALE ELEVATORE PAGLIA	**STROHFÖRDERER**	**ELEVADOR DE PALHA**	**STRO−ELEVATOR**

SEC. 13

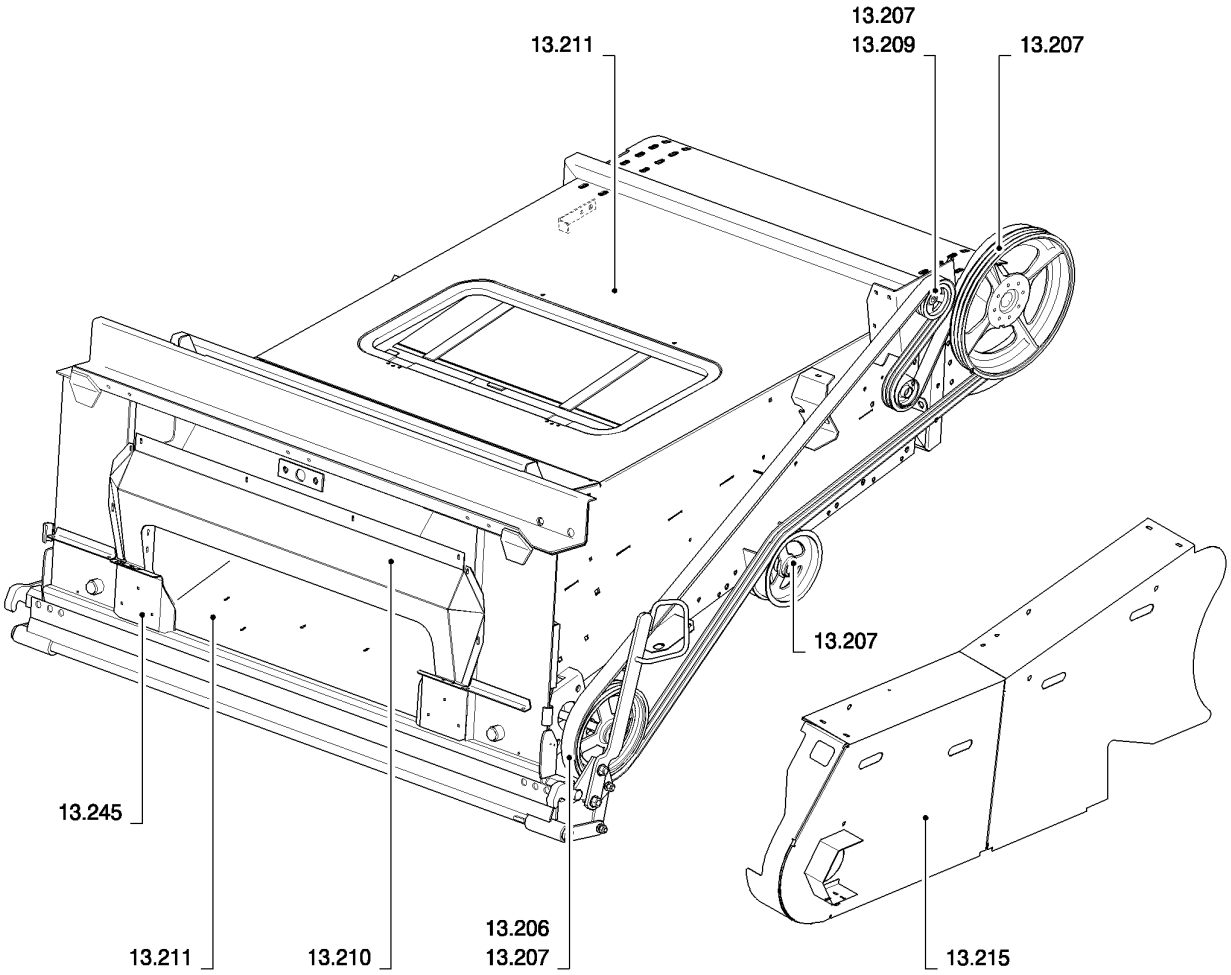

ссылка	Номер детали	Кол-во	Описание

13.201(01) STRAW ELEVATOR, UPPER SHAFT GREASING

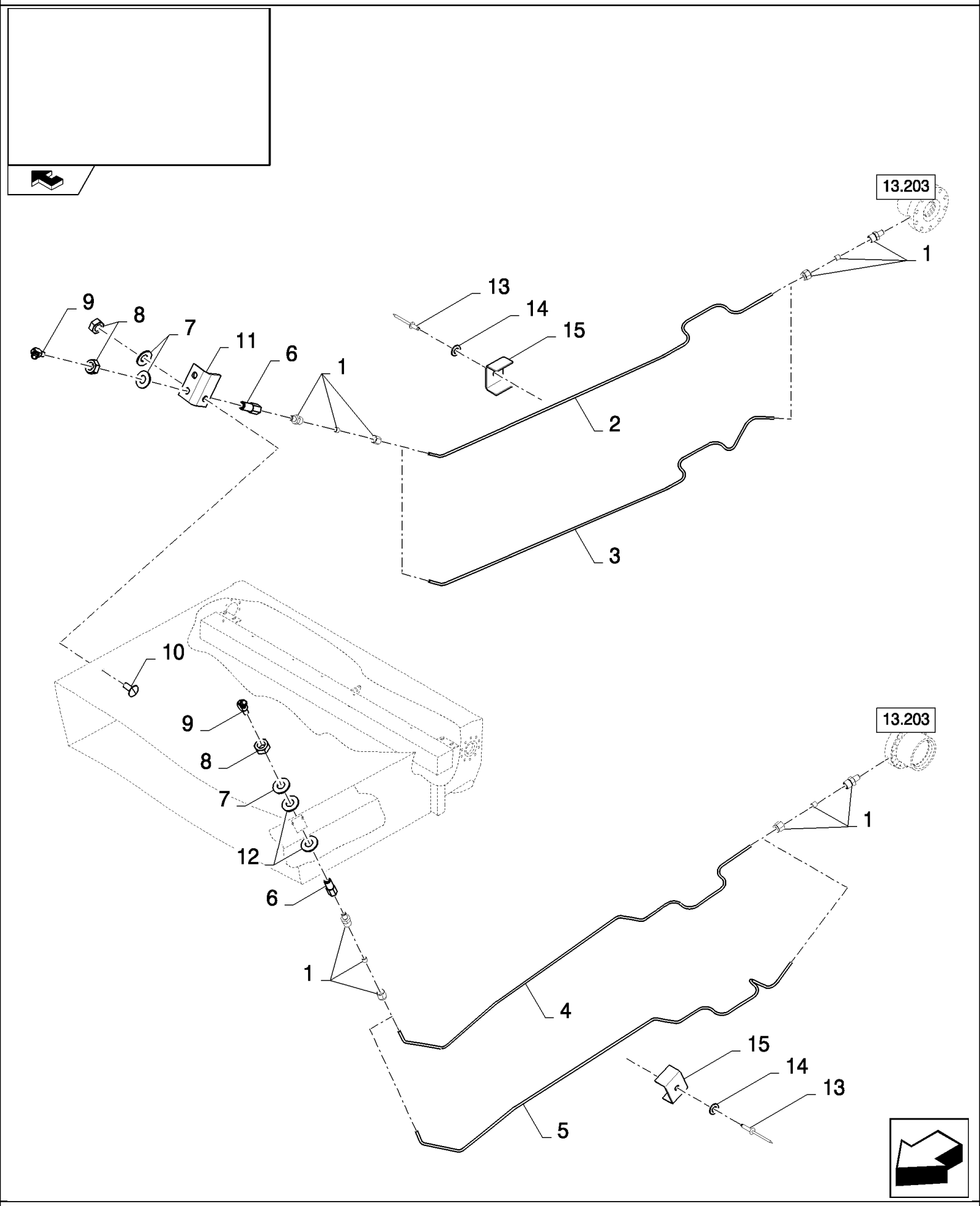

CSX7080 C659 - COMBINE (9/06-8/08)

13.201(01) STRAW ELEVATOR, UPPER SHAFT GREASING

ссылка	Номер детали	Кол-во	Описание
1	159338	8	CONNECTOR, HYD.,
2	84981445	1	TUBE, RH
3	84980299	1	TUBE, RH
4	84980298	1	TUBE, LH
5	84981446	1	TUBE, LH
6	84981173	4	CONNECTOR, HYD.,
7	140045	5	WASHER, SPRING, Belleville, M10, , BSN C615
7	140045	1	WASHER, SPRING, Belleville, M10, , ASN D616
8	100016	5	NUT, M10, Cl 8, , BSN C615
8	100016	1	NUT, M10, Cl 8, , ASN D616
9	84814929	4	NIPPLE, LUBE, , BSN C615
9	84814929	5	NIPPLE, LUBE, , ASN D616
10	120041	1	BOLT, CARRIAGE, Short NK, M10 x 20, Cl8.8, Full Thd, M10x30
11	84980305	1	SUPPORT,
12	86511323	4	WASHER, M10 x 20 x 2,
13	445395	2	RIVET, Pop, M4.8 x 18.1,
14	140014	2	WASHER, M5 x 10 x 1, , BSN C615
14	86625261	2	WASHER, M5 x 10 x 1, , ASN D616
15	84814933	2	CLAMP,

13.202(01) STRAW ELEVATOR, UPPER SHAFT DRIVE

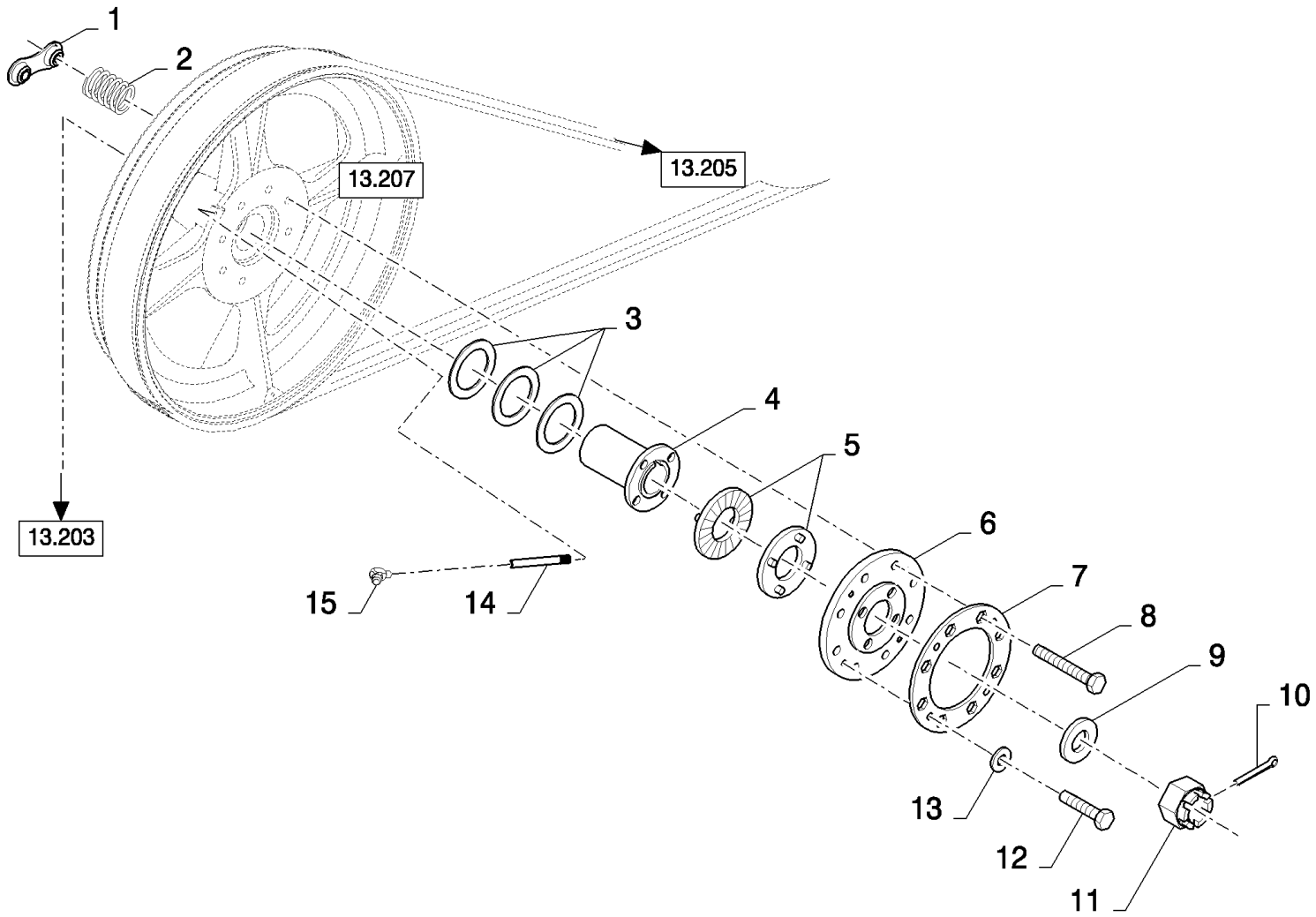

CSX7080 C659 - COMBINE (9/06-8/08)

13.202(01) STRAW ELEVATOR, UPPER SHAFT DRIVE

ссылка	Номер детали	Кол-во	Описание
1	84071664	4	PLATE, FIXING,
2	84073712	8	SPRING,
3	84036681	3	WASHER, 60MM
4	84058258	1	BUSHING,
5	362801	2	CLUTCH,
6	84069812	1	DISC,
7	84071421	1	PLATE, LOCKING,
8	86508622	8	BOLT, Hex, M12 x 100, 10.9, M12x100
9	84073585	1	WASHER,
10	130012	1	PIN, SPLIT (COTTER), M5 x 50,
11	309090	1	NUT, SLOTTED, M24 x 1.5, Cl 8, M24x1.5
12	120103	4	BOLT, Hex, M8 x 16, 8.8,
13	322358	4	WASHER, SPRING, Belleville, M8,
14	84447295	1	TUBE,
15	84814929	1	NIPPLE, LUBE,

13.203(A 01) STRAW ELEVATOR, UPPER SHAFT

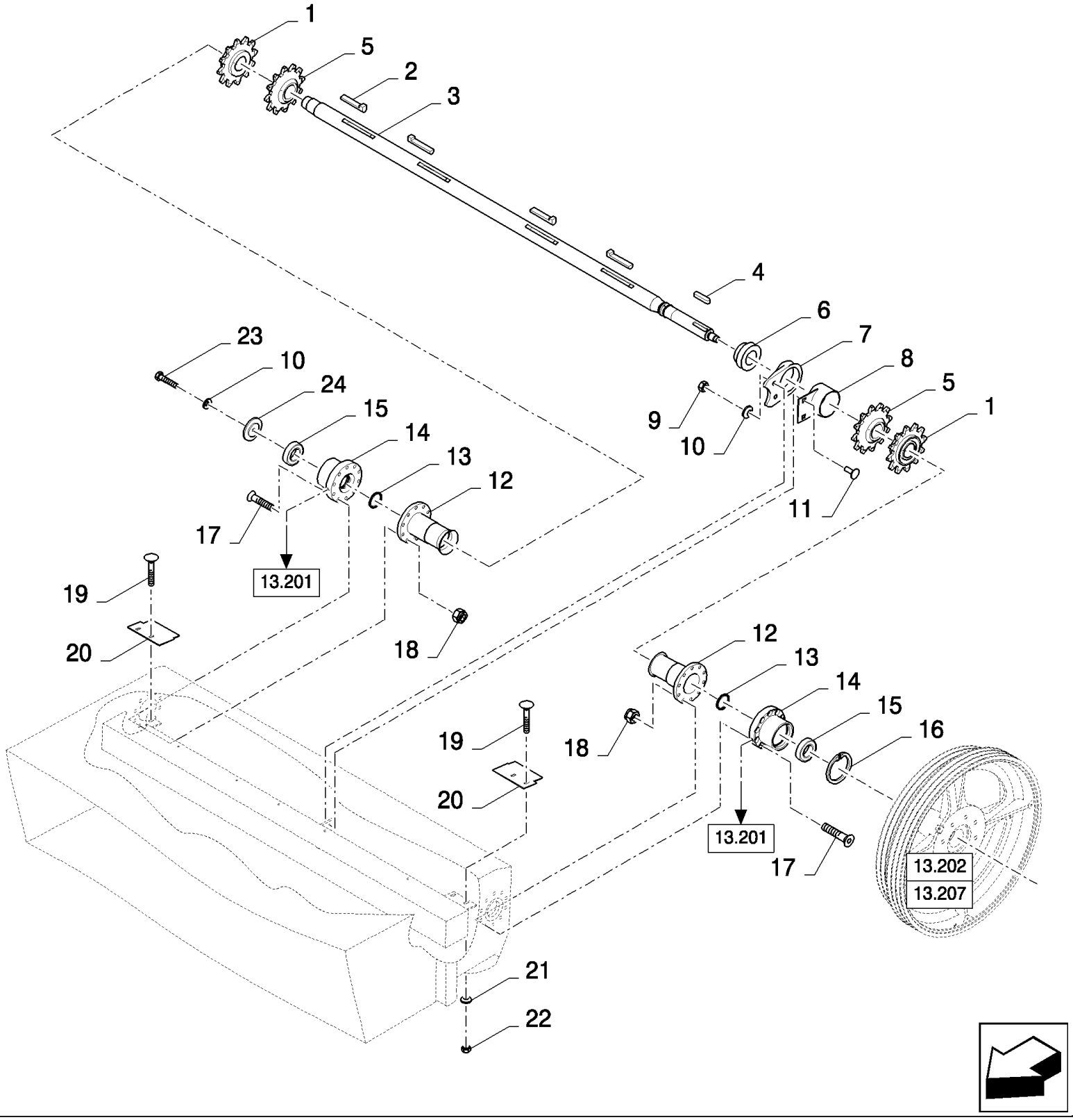

CSX7080 C659 - COMBINE (9/06-8/08)

13.203(A 01) STRAW ELEVATOR, UPPER SHAFT

ссылка	Номер детали	Кол-во	Описание
1	84072022	2	SPROCKET, DRIVEN,
2	412241	4	KEY,
3	84991232	1	SHAFT,
4	320607	1	KEY,
5	84072029	2	SPROCKET, DRIVEN,
6	754393	1	BEARING ASSY,
7	751779	1	HOUSING, BEARING,
8	84073592	1	COVER,
9	9706685	2	NUT, M12, Cl 8,
10	140046	3	WASHER, Belleville, M12,
11	328430	2	BOLT, CARRIAGE, Short NK, M12 x 35, Cl8.8, Full Thd, M12x35
12	84073705	2	SHIELD,
13	220012	2	RING, 45MM
14	84435013	2	HOUSING, BEARING,
15	323327	2	BEARING ASSY,
16	80300633	1	RING, SNAP,
17	84334564	20	SCREW, Hex Soc Flat Hd, M10 x 40, 12.9, M10x40
18	100037	20	NUT, M10 x 1.5, Cl 8,
19	86507486	4	BOLT, CARRIAGE, Short NK, M8 x 20, Cl8.8, Full Thd,
20	84073735	2	PLATE,
21	412650	4	WASHER, Belleville, M8,
22	9706690	4	NUT, M8, Cl 8,
23	9706687	1	SCREW, Hex, M12 x 30, 8.8,
24	84053190	1	COVER,

13.204(01) CHOCK

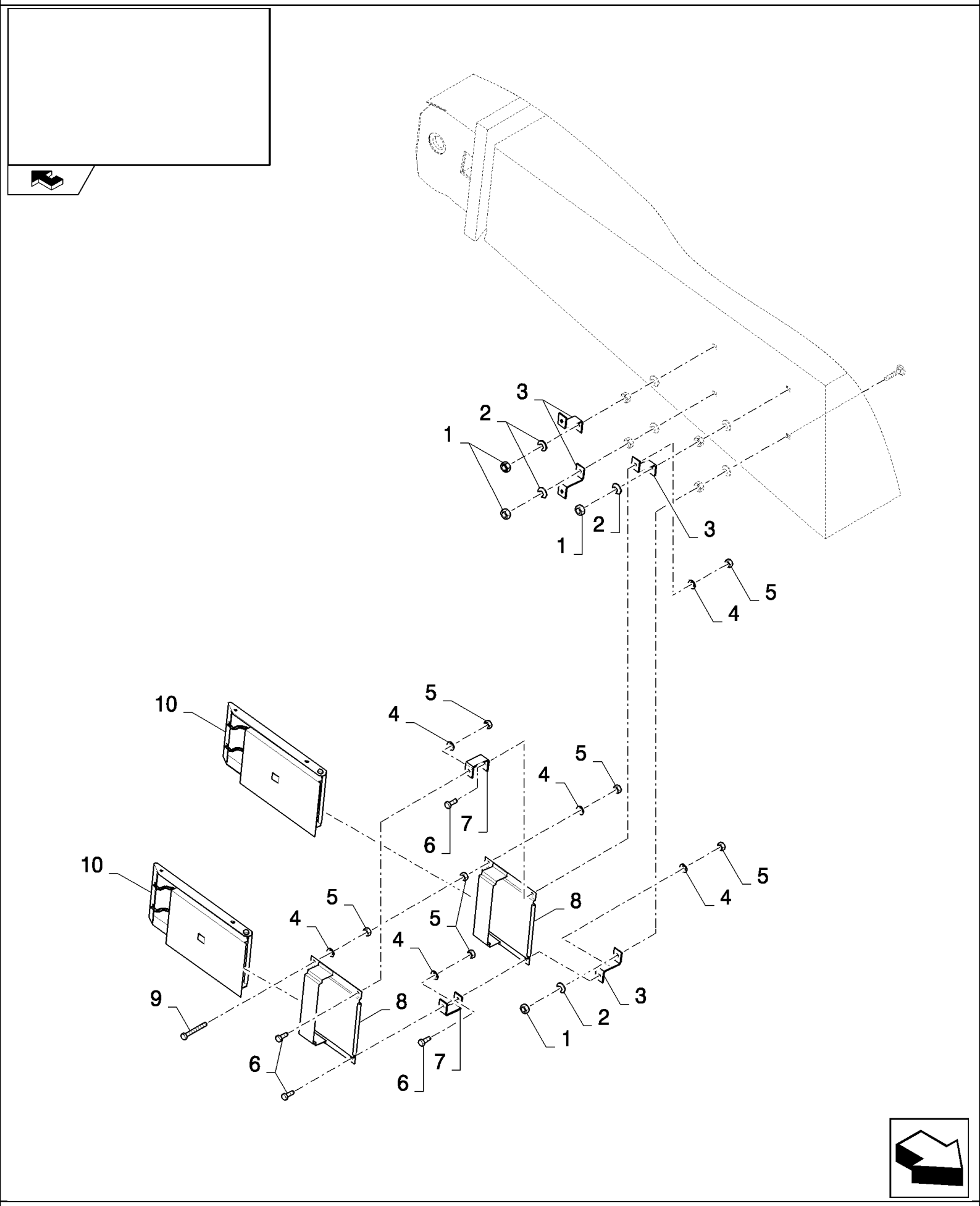

CSX7080 C659 - COMBINE (9/06-8/08)

13.204(01) CHOCK

ссылка	Номер детали	Кол-во	Описание
1	9706690	4	NUT, M8, Cl 8,
2	322358	4	WASHER, SPRING, Belleville, M8,
3	84018278	4	SUPPORT,
4	140045	8	WASHER, SPRING, Belleville, M10,
5	100016	10	NUT, M10, Cl 8,
6	43139	4	SCREW, Hex, M10 x 25, 8.8, Full Thd, M10x25
7	87011442	2	SUPPORT,
8	452770	2	CLAMP,
9	538885	2	BOLT, Hex, M10 x 90, 8.8, Full Thd, M10x90
10	452769	2	WHEEL CHOCK,

13.205(01) HEADER DRIVE ENGAGING IDLER

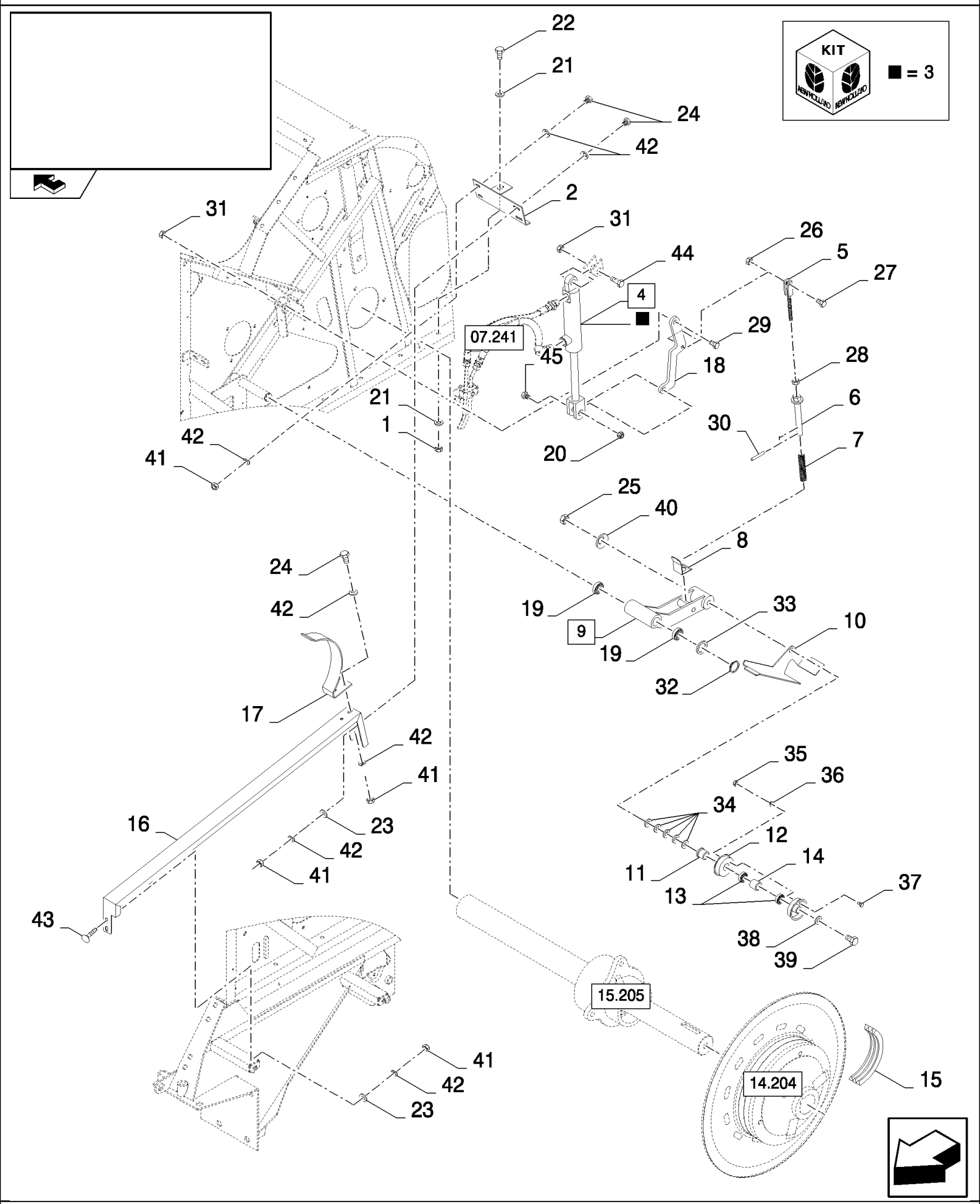

CSX7080 C659 - COMBINE (9/06-8/08)

13.205(01) HEADER DRIVE ENGAGING IDLER

ссылка	Номер детали	Кол-во	Описание
1	100016	1	NUT, M10, Cl 8,
2	84072926	1	SUPPORT,
3	87341219	1	
4	87338235	1	HYDRAULIC CYLINDER, (3)
5	84072638	1	YOKE,
6	84446689	1	REGULATOR,
7	84446704	1	SPRING, , FOR 2HB ONLY
7	84446705	1	SPRING, , FOR 3HB ONLY
8	84446619	1	INDICATOR,
9	87364418	1	LEVER, (19)
10	84983455	1	PLATE,
11	427248	1	BUSHING,
12	84441735	1	HALF-PULLEY,
13	443898	1	BEARING, BALL,
14	430235	1	SPACER,
15	84446792	1	BELT, TRANSMISSION, , FOR 2HB ONLY
15	9817374	1	BELT, , FOR 3HB ONLY
16	84072929	1	GUIDE,
17	84989940	1	GUIDE,
18	84462788	1	LEVER,
19	420434	2	BUSHING,
20	100038	1	NUT, M12 x 1.75, Cl 8,
21	140045	2	WASHER, SPRING, Belleville, M10,
22	43140	1	BOLT, Hex, M10 x 30, 8.8, Full Thd,
23	378243	4	WASHER, M8,
24	120104	6	SCREW, Hex, M8 x 20, 8.8,
25	100020	1	NUT, M16, Cl 8,
26	100037	1	NUT, M10 x 1.5, Cl 8,
27	9706704	1	BOLT, Hex, M10 x 35, 8.8, Full Thd,
28	9706685	1	NUT, M12, Cl 8,
29	120092	1	SCREW, Hex, M16 x 70, 8.8,
30	300872	2	PIN, LOCK, M8 x 36, Slotted,
31	86000441	2	NUT, M16 x 2, Cl 8,
32	370003	1	RING, SNAP, M30, Ext,
33	140108	1	WASHER,
34	140090	AR	WASHER,
35	9706755	3	NUT, M6, Cl 8,
36	322357	3	WASHER, SPRING, Belleville, M6,
37	86508568	3	SCREW, Hex, M6 x 16, 8.8,
38	140093	1	WASHER,
39	84435244	1	BOLT, Hex, M16 x 180, 8.8,
40	140048	1	WASHER, SPRING, Belleville, M16,
41	9706690	8	NUT, M8, Cl 8,
42	322358	14	WASHER, SPRING, Belleville, M8,

CSX7080 C659 - COMBINE (9/06-8/08)

13.205(01) HEADER DRIVE ENGAGING IDLER

ссылка	Номер детали	Кол-во	Описание
43	86507486	2	BOLT, CARRIAGE, Short NK, M8 x 20, Cl8.8, Full Thd,
44	120090	1	SCREW, Hex, M16 x 50, 8.8,
45	9706702	1	SCREW, Hex, M12 x 50, 8.8,

13.206(01) SUSPENSION BRACES, FIXED

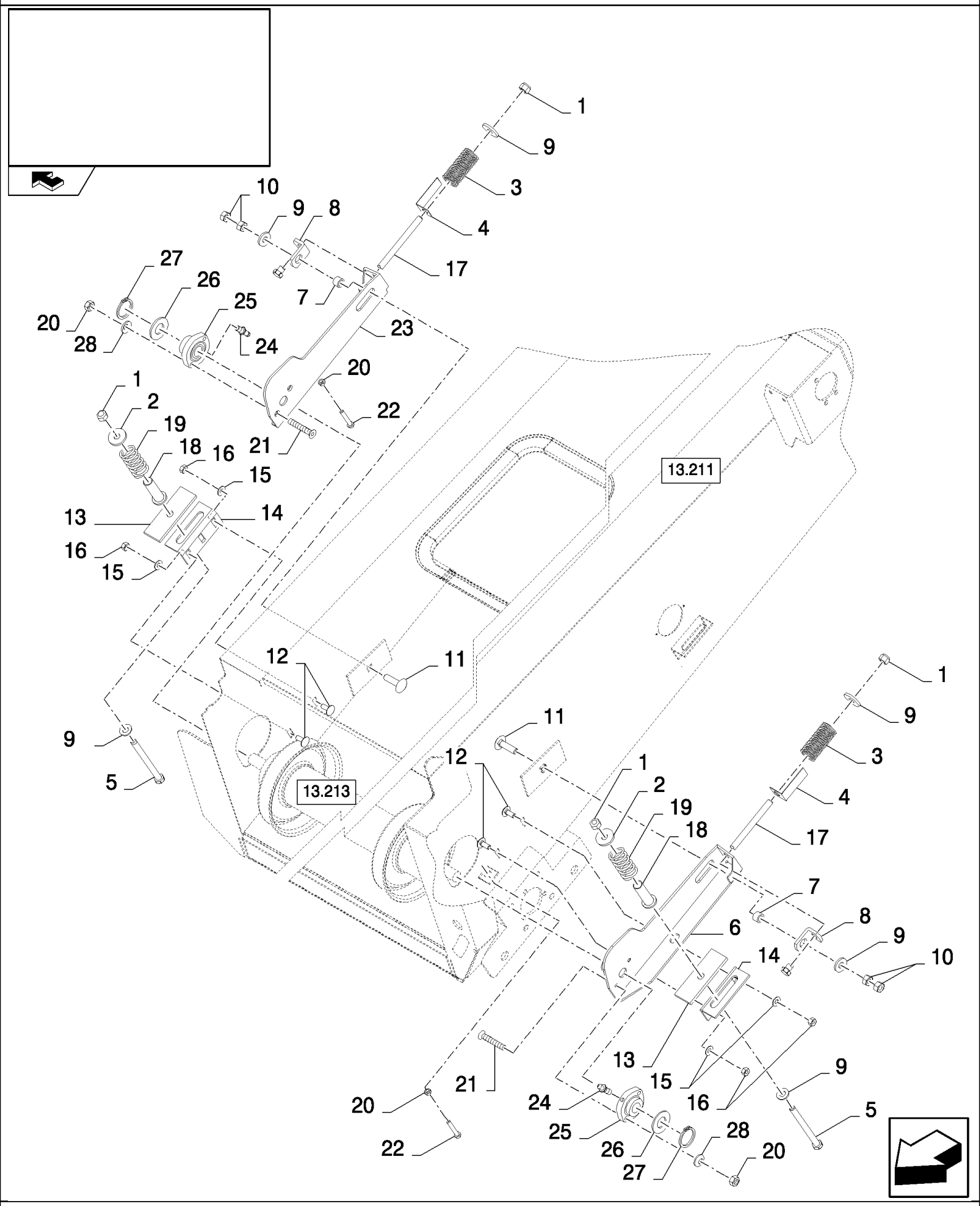

CSX7080 C659 - COMBINE (9/06-8/08)

13.206(01) SUSPENSION BRACES, FIXED

ссылка	Номер детали	Кол-во	Описание
1	412066	4	NUT, LOCK, M16 x 2, Cl 8, M16
2	451743	2	WASHER, 16.5MM
3	920487	2	SPRING,
4	84981494	2	INDICATOR,
5	86508585	2	BOLT, Hex, M16 x 190, 8.8, M16x190
6	84457756	1	ARM, LH
7	84052730	2	BUSHING,
8	84075539	2	BRACKET,
9	325594	6	WASHER, 17MM
10	100020	4	NUT, M16, Cl 8,
11	120046	2	BOLT, CARRIAGE, Short NK, M16 x 60, Cl8.8, Full Thd,
12	120044	4	BOLT, CARRIAGE, Short NK, M12 x 30, Cl8.8, Full Thd,
13	9815111	2	CANVAS,
14	9815110	2	SUPPORT,
15	140046	4	WASHER, Belleville, M12,
16	9706685	4	NUT, M12, Cl 8,
17	84435244	2	BOLT, Hex, M16 x 180, 8.8,
18	84982624	2	BUSHING,
19	920397	2	SPRING,
20	100016	6	NUT, M10, Cl 8,
21	120259	4	SCREW, Hex Soc Flat Hd, M10 x 40, 8.8,
22	120115	2	SCREW, Hex, M10 x 70, 8.8, Full Thd,
23	84457755	1	ARM, RH
24	84022088	2	NIPPLE, LUBE,
25	84078927	2	BEARING ASSY,
26	441176	4	WASHER,
27	370003	2	RING, SNAP, M30, Ext,
28	140045	4	WASHER, SPRING, Belleville, M10,

13.206(A 01) SUSPENSION BRACES, FIXED - FOR LATERALE ONLY

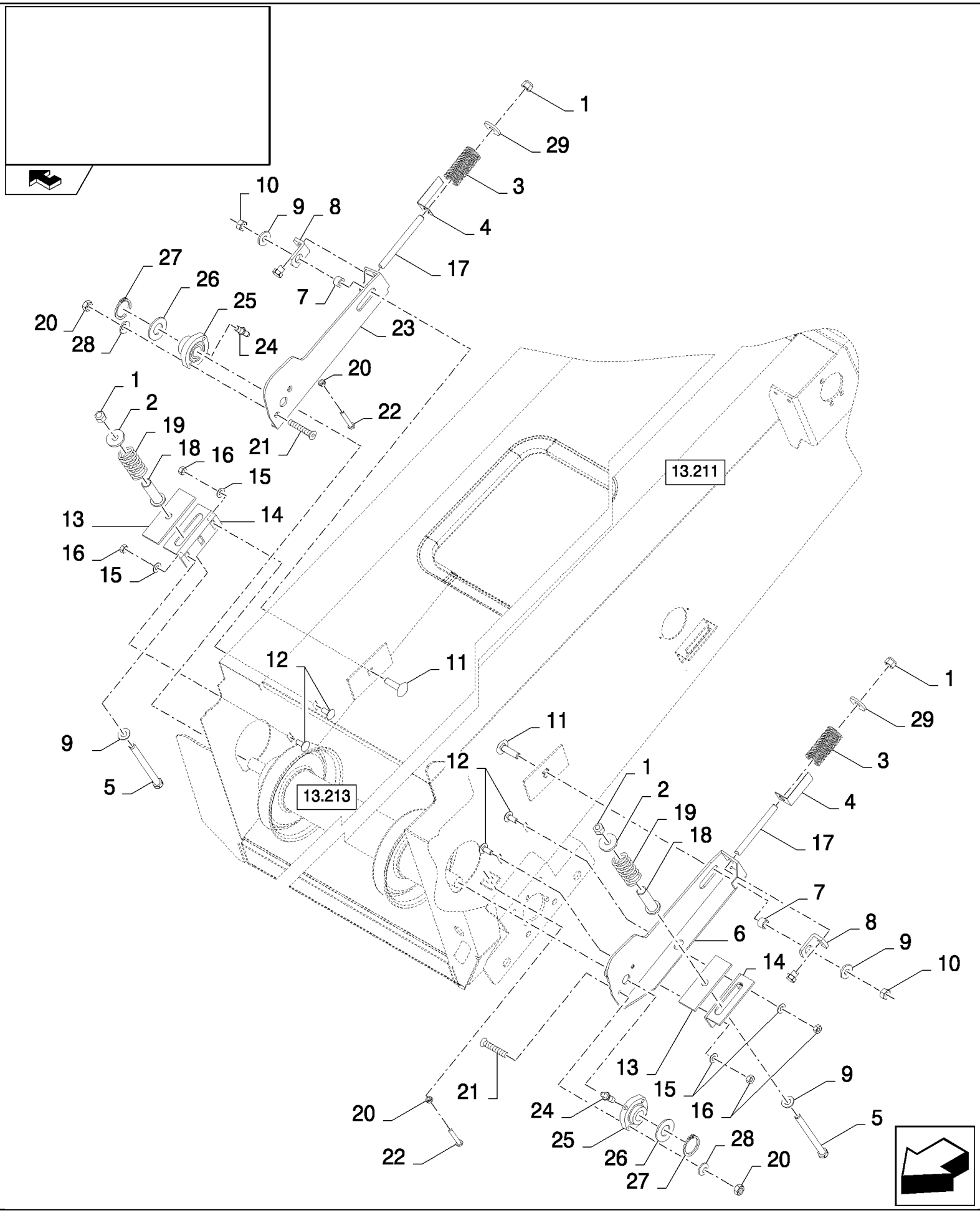

CSX7080 C659 - COMBINE (9/06-8/08)

13.206(A 01) SUSPENSION BRACES, FIXED - FOR LATERALE ONLY

ссылка	Номер детали	Кол-во	Описание
1	412066	4	NUT, LOCK, M16 x 2, Cl 8, M16
2	451743	2	WASHER, 16.5MM
3	920487	2	SPRING,
4	87694820	2	INDICATOR,
5	9814566	2	BOLT, Hex, M16 x 190, 8.8, Full Thd, M16x190
6	87621646	1	ARM, LH
7	84052730	2	BUSHING,
8	87694817	2	ARM, SUPPORTING,
9	325594	4	WASHER, 17MM
10	86000441	2	NUT, M16 x 2, Cl 8,
11	120047	2	BOLT, CARRIAGE, Short NK, M16 x 70, Cl8.8,
12	120044	4	BOLT, CARRIAGE, Short NK, M12 x 30, Cl8.8, Full Thd,
13	9815111	2	CANVAS,
14	9815110	2	SUPPORT,
15	140046	4	WASHER, Belleville, M12,
16	9706685	4	NUT, M12, Cl 8,
17	87562011	2	EYEBOLT,
18	84982624	2	BUSHING,
19	920397	2	SPRING,
20	100016	6	NUT, M10, Cl 8,
21	120259	4	SCREW, Hex Soc Flat Hd, M10 x 40, 8.8,
22	120115	2	SCREW, Hex, M10 x 70, 8.8, Full Thd,
23	87621645	1	ARM, RH
24	84022088	2	NIPPLE, LUBE,
25	84078927	2	BEARING ASSY,
26	441176	4	WASHER,
27	370003	2	RING, SNAP, M30, Ext,
28	140045	4	WASHER, SPRING, Belleville, M10,
29	394631	2	WASHER,

13.207(01) STRAW ELEVATOR DRIVE 3HB AND 2HB

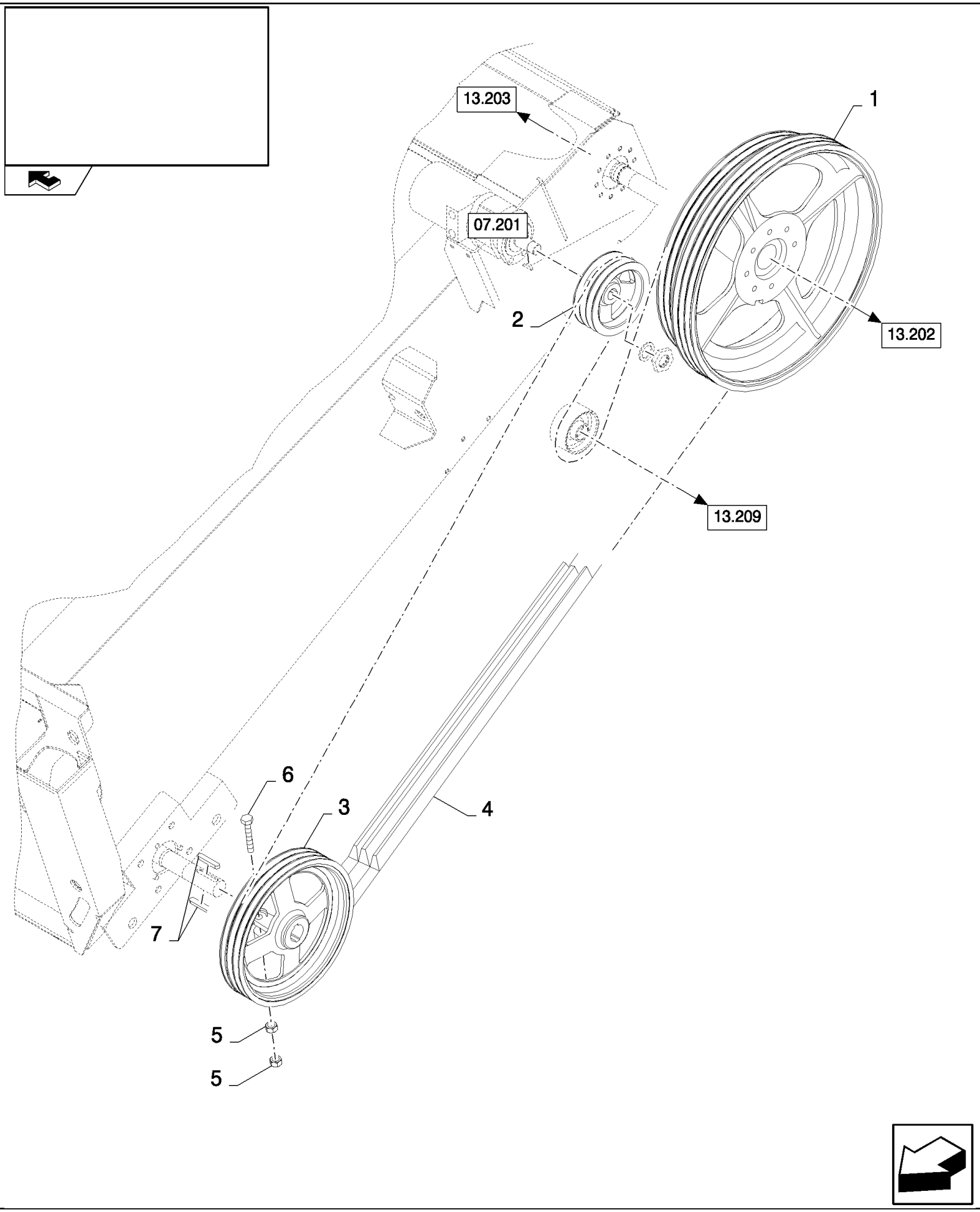

CSX7080 C659 - COMBINE (9/06-8/08)

13.207(01) STRAW ELEVATOR DRIVE 3HB AND 2HB

ссылка	Номер детали	Кол-во	Описание
1	84981563	1	PULLEY, , FOR 2HB ONLY
1	84980479	1	PULLEY, , FOR 3HB ONLY
2	84981404	1	PULLEY, , FOR 2HB ONLY
2	84980478	1	PULLEY, , FOR 3HB ONLY
3	84982392	1	PULLEY, , FOR 2HB ONLY
3	84980424	1	PULLEY, , FOR 3HB ONLY
4	84981586	1	BELT, TRANSMISSION, , FOR 2HB ONLY
4	84991234	1	BELT, TRANSMISSION, , FOR 3HB ONLY
5	100020	2	NUT, M16, Cl 8,
6	350616	1	SCREW, Hex, M16 x 90, 8.8,
7	323190	1	KEY, , FOR 2HB ONLY
7	320607	2	KEY, , FOR 3HB ONLY

13.207(A 01) STRAW ELEVATOR DRIVE 3HB - FOR LATERALE ONLY

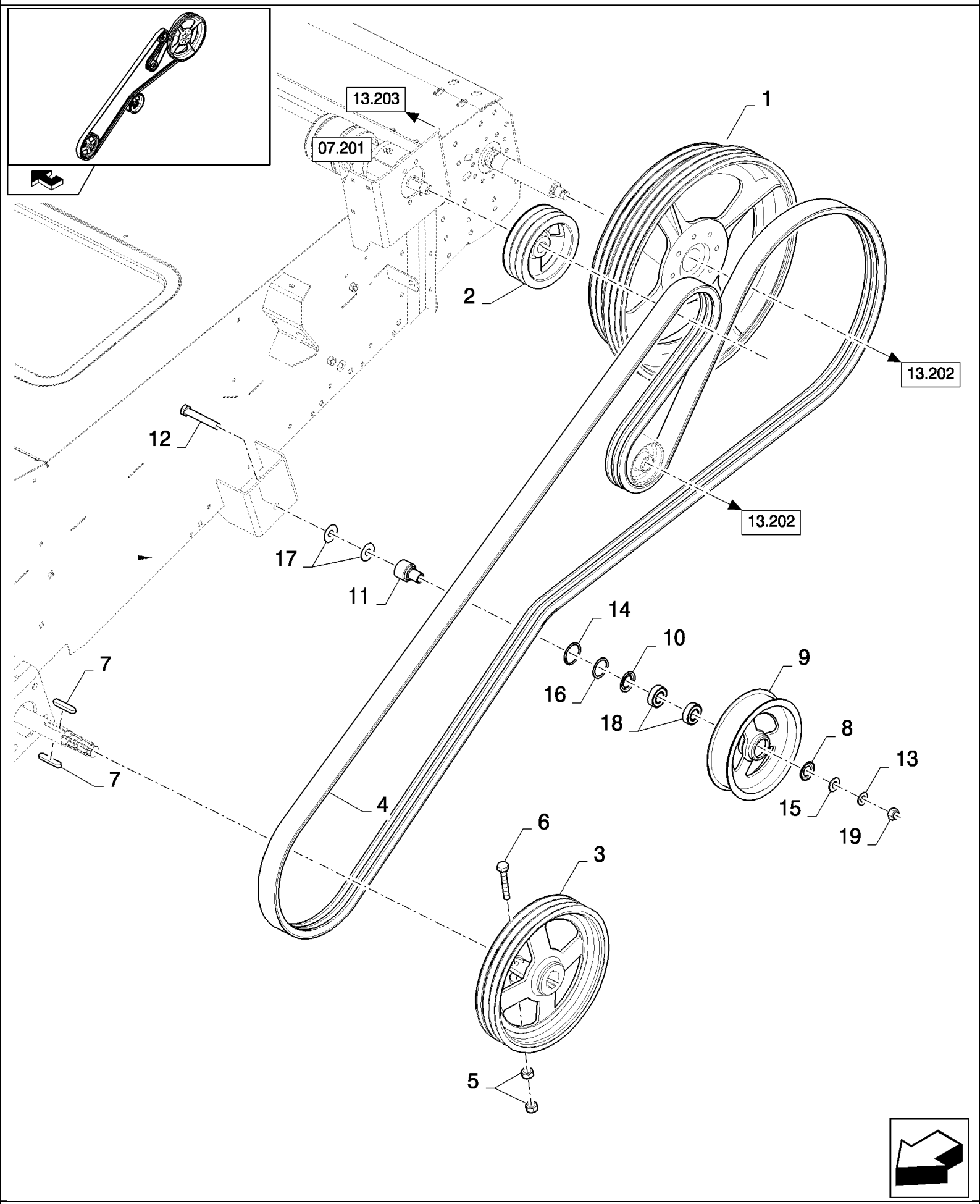

CSX7080 C659 - COMBINE (9/06-8/08)

13.207(A 01) STRAW ELEVATOR DRIVE 3HB - FOR LATERALE ONLY

ссылка	Номер детали	Кол-во	Описание
1	84980479	1	PULLEY,
2	84980478	1	PULLEY,
3	84980424	1	PULLEY,
4	87527868	1	BELT, TRANSMISSION,
5	100020	3	NUT, M16, Cl 8,
6	350616	1	SCREW, Hex, M16 x 90, 8.8,
7	320607	2	KEY,
8	390515	1	RING,
9	87619598	1	WHEEL, IDLER,
10	391120	1	ELEMENT, SEALING,
11	87619531	1	SHAFT,
12	374889	1	BOLT, Hex, M16 x 100, 8.8,
13	140048	1	WASHER, SPRING, Belleville, M16,
14	370011	1	RING, SNAP, M52, Int,
15	84440599	1	WASHER,
16	84991773	1	SHIM,
17	393062	2	WASHER,

13.208(A 01) LOWER SHAFT, 3HB

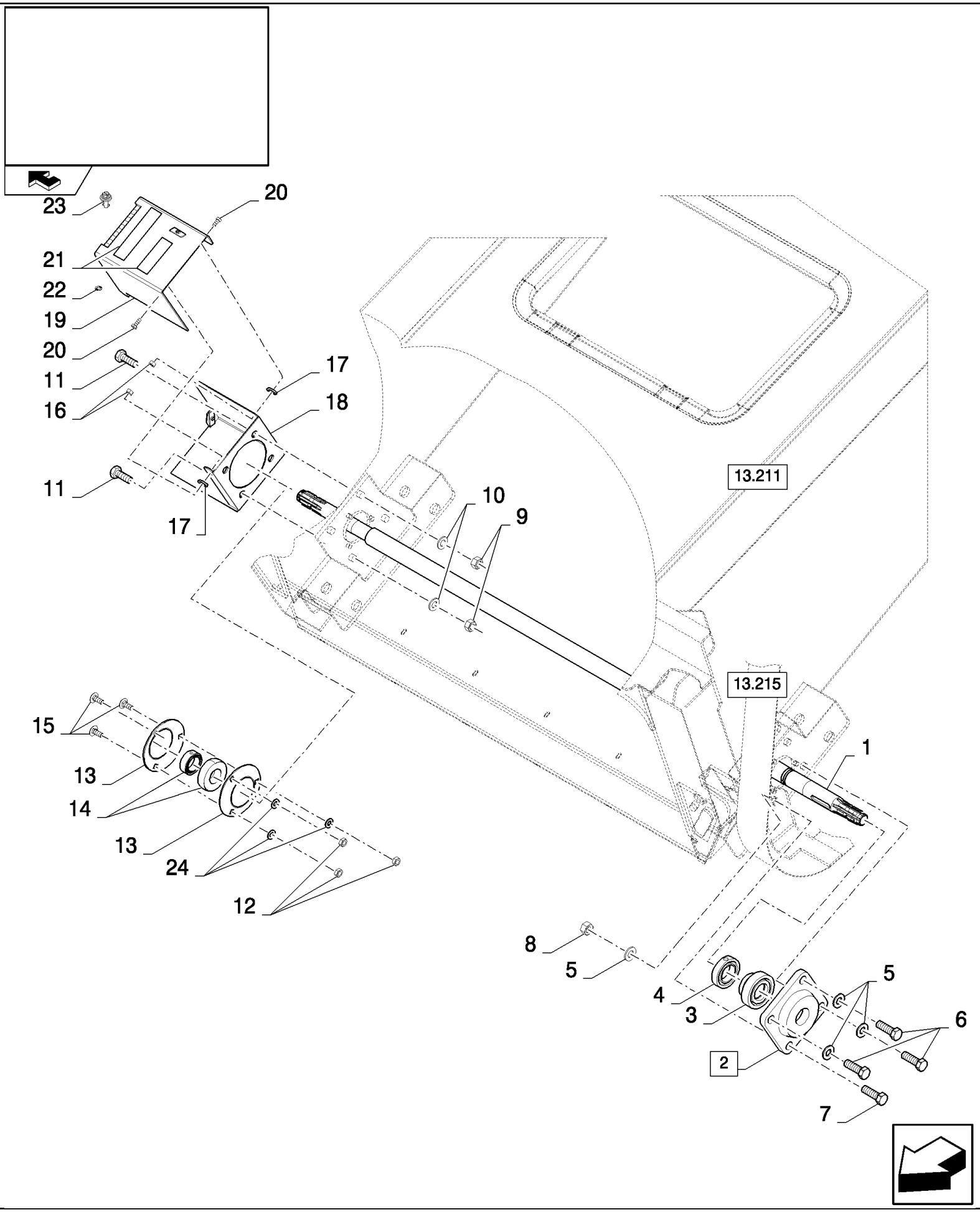

CSX7080 C659 - COMBINE (9/06-8/08)

13.208(A 01) LOWER SHAFT, 3HB

ссылка	Номер детали	Кол-во	Описание
1	84980405	1	SHAFT,
2	89814384	1	BEARING ASSY, (3,4)
3	NSS	1	NOT SERVICED SEPARATELY,
4	563733	1	COLLAR,
5	140048	4	WASHER, SPRING, Belleville, M16,
6	120090	2	SCREW, Hex, M16 x 50, 8.8,
7	120091	2	BOLT, Hex, M16 x 60, 8.8,
8	100020	2	NUT, M16, Cl 8,
9	9706685	4	NUT, M12, Cl 8,
10	140046	4	WASHER, Belleville, M12,
11	9706687	4	SCREW, Hex, M12 x 30, 8.8,
12	100016	3	NUT, M10, Cl 8,
13	36403	2	FLANGE,
14	322360	1	BEARING, BALL,
15	338949	3	BOLT, CARRIAGE, Short NK, M10 x 25, Cl8.8, Full Thd,
16	412152	2	NUT, LOCK, M6 x 1, Cl 8.8,
17	140015	6	WASHER,
18	84981803	1	SHIELD,
19	84981804	1	SHIELD,
20	120100	2	BOLT, Hex, M6 x 20, 8.8,
21	401502	1	STRIP, ANTI-SKID, 51mm x 18.3 Roll - Cut to Size
22	9514605	1	WASHER,
23	89514603	1	LOCK,
24	140045	3	WASHER, SPRING, Belleville, M10,

13.209(01) STRAW ELEVATOR DRIVE 3HB AND 2HB, IDLER

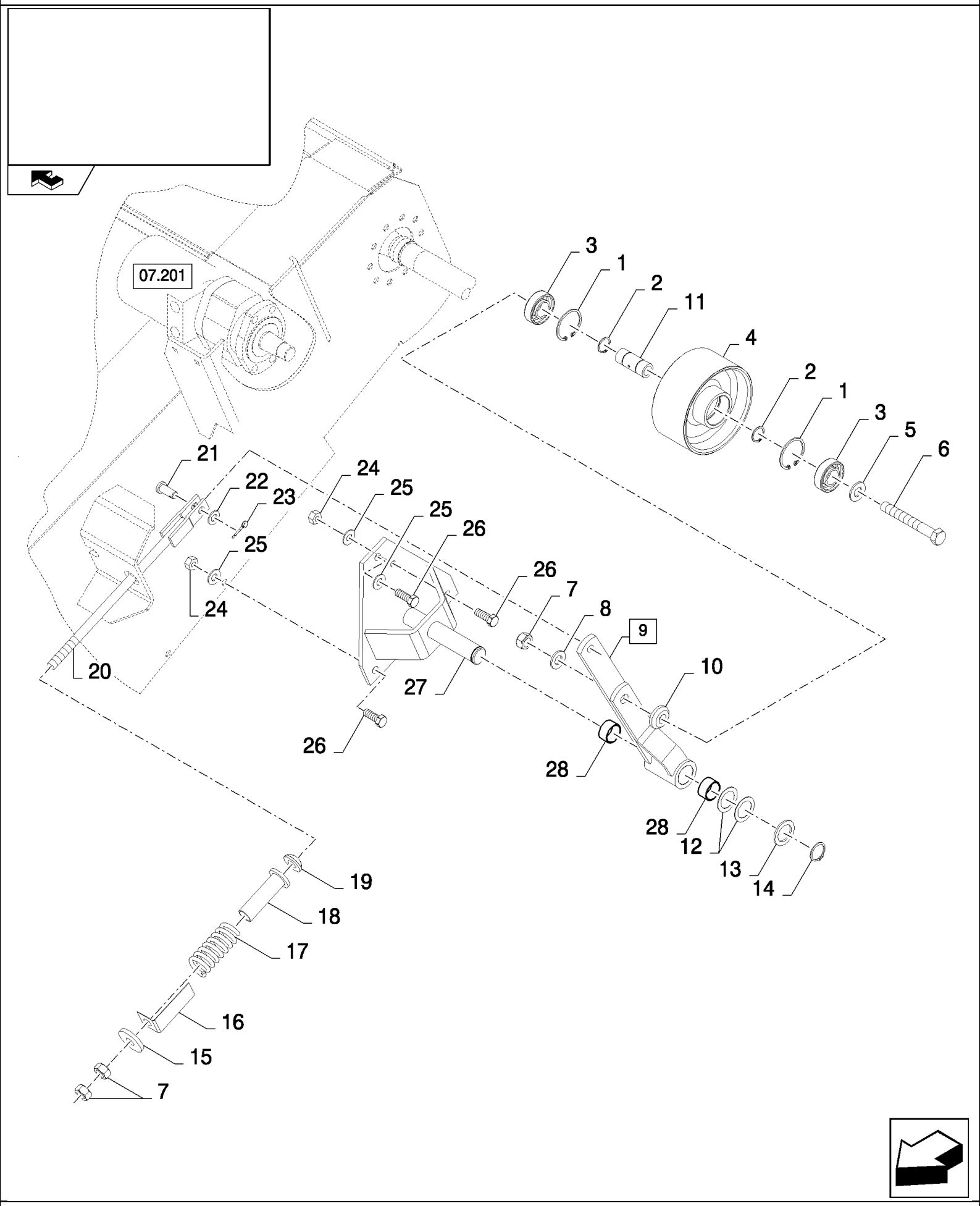

CSX7080 C659 - COMBINE (9/06-8/08)

13.209(01) STRAW ELEVATOR DRIVE 3HB AND 2HB, IDLER

ссылка	Номер детали	Кол-во	Описание
1	370011	2	RING, SNAP, M52, Int,
2	370002	2	RING, SNAP, M25, Ext,
3	443898	2	BEARING, BALL,
4	84980775	1	WHEEL, IDLER,
5	378246	1	WASHER, 16MM
6	321246	1	BOLT, Hex, M16 x 120, 8.8,
7	100020	3	NUT, M16, Cl 8,
8	140048	1	WASHER, SPRING, Belleville, M16,
9	84980710	1	ARM, (28)
10	84980619	1	BUSHING,
11	84980609	1	BUSHING,
12	441176	2	WASHER, 31MM
13	84814901	1	WASHER,
14	370003	1	RING, SNAP, M30, Ext,
15	84005115	1	WASHER, 17MM
16	84981593	1	INDICATOR, , FOR 2HB ONLY
16	84981584	1	INDICATOR, , FOR 3HB ONLY
17	359641	1	SPRING,
18	84981585	1	TUBE,
19	450869	1	WASHER,
20	84981179	1	ROD,
21	412209	1	PIN, CLEVIS, M12 x 30,
22	140223	1	WASHER, 13MM
23	130004	1	PIN, SPLIT (COTTER), M3.2 x 25,
24	9706685	2	NUT, M12, Cl 8,
25	140046	3	WASHER, Belleville, M12,
26	86629541	3	BOLT, Hex, M12 x 40, 8.8, Full Thd,
27	84980730	1	SUPPORT,
28	420410	2	BUSHING,

13.209(A 01) STRAW ELEVATOR DRIVE 3HB - FOR LATERALE ONLY

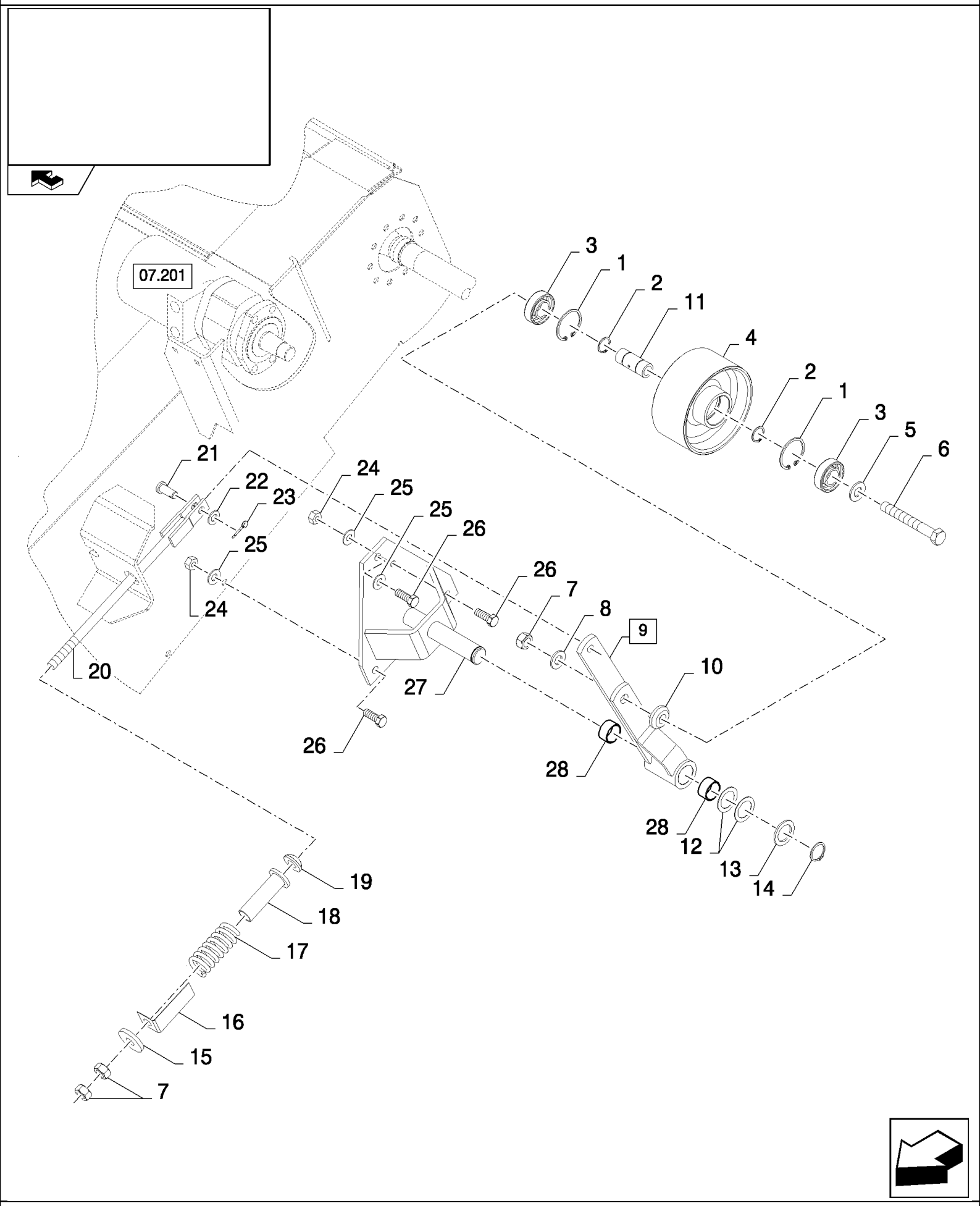

CSX7080 C659 - COMBINE (9/06-8/08)

13.209(A 01) STRAW ELEVATOR DRIVE 3HB - FOR LATERALE ONLY

ссылка	Номер детали	Кол-во	Описание
1	370011	2	RING, SNAP, M52, Int,
2	370002	2	RING, SNAP, M25, Ext,
3	443898	2	BEARING, BALL,
4	84980775	1	WHEEL, IDLER,
5	378246	1	WASHER, 16MM
6	321246	1	BOLT, Hex, M16 x 120, 8.8,
7	100020	3	NUT, M16, Cl 8,
8	140048	1	WASHER, SPRING, Belleville, M16,
9	84980710	1	ARM, (28)
10	84980619	1	BUSHING,
11	84980609	1	BUSHING,
12	441176	2	WASHER, 31MM
13	84814901	1	WASHER,
14	370003	1	RING, SNAP, M30, Ext,
15	84005115	1	WASHER, 17MM
16	84981584	1	INDICATOR,
17	359641	1	SPRING,
18	84981585	1	TUBE,
19	450869	1	WASHER,
20	84981179	1	ROD,
21	412209	1	PIN, CLEVIS, M12 x 30,
22	140223	1	WASHER, 13MM
23	130004	1	PIN, SPLIT (COTTER), M3.2 x 25,
24	9706685	2	NUT, M12, Cl 8,
25	140046	3	WASHER, Belleville, M12,
26	86629541	3	BOLT, Hex, M12 x 40, 8.8, Full Thd,
27	84980730	1	SUPPORT,
28	420410	2	BUSHING,

13.210(A 01) BALANCE FRAME STRAW ELEVATOR

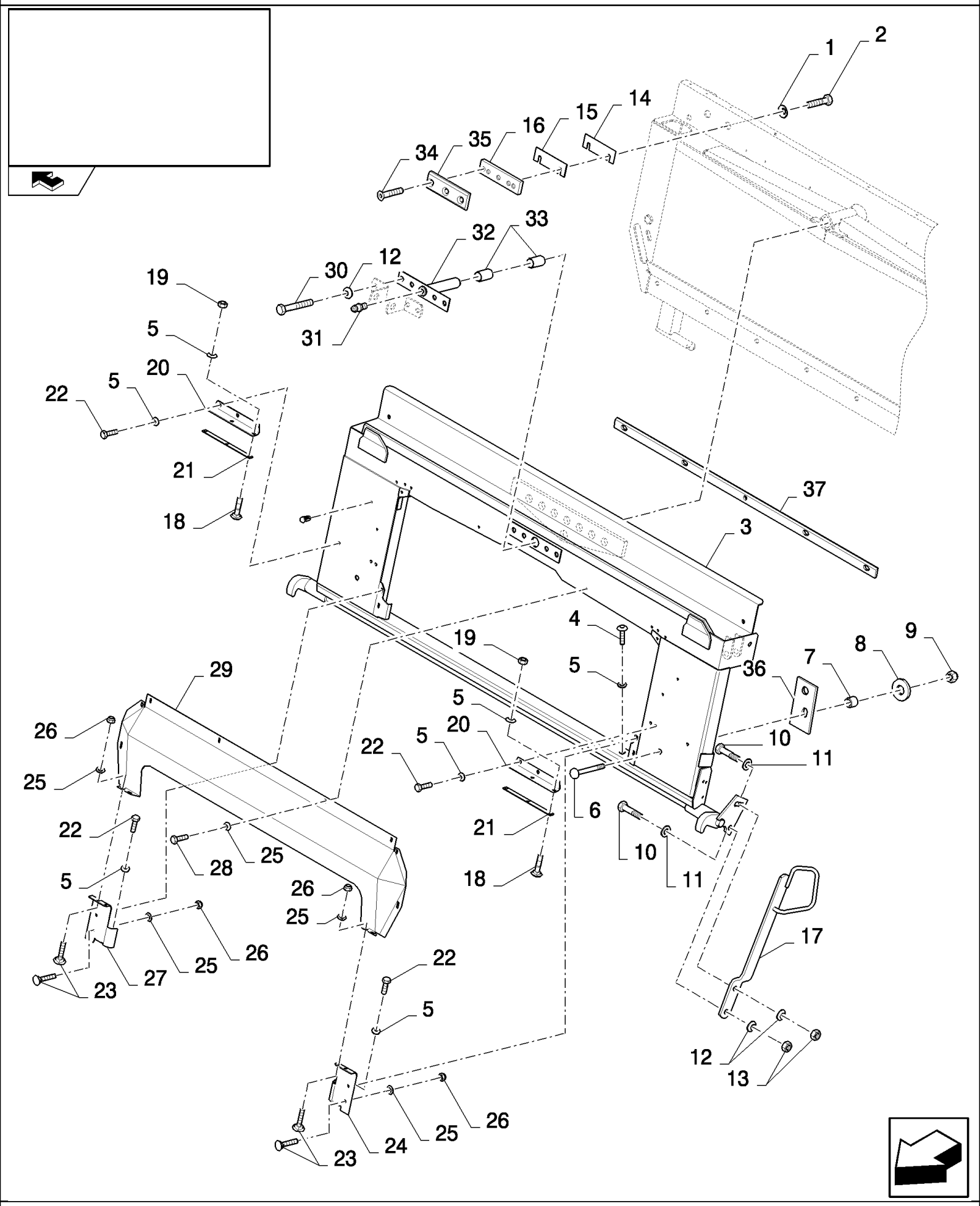

CSX7080 C659 - COMBINE (9/06-8/08)

13.210(A 01) BALANCE FRAME STRAW ELEVATOR

ссылка	Номер детали	Кол-во	Описание
1	140045	4	WASHER, SPRING, Belleville, M10,
2	43139	4	SCREW, Hex, M10 x 25, 8.8, Full Thd, M10x25
3	84334953	1	FRAME, , BSN C571
3	87547821	1	FRAME, , ASN D572
4	86512788	2	SCREW, M8x30
5	322358	12	WASHER, SPRING, Belleville, M8,
6	300663	2	BOLT, CARRIAGE, Short NK, M16 x 120, Cl8.8, M16x120
7	84071496	2	SPACER, , BSN C571
7	87547698	2	SPACER, , ASN D572
8	913347	2	WASHER, 17MM
9	412066	2	NUT, LOCK, M16 x 2, Cl 8, M16
10	43168	2	BOLT, Hex, M16 x 40, 8.8,
11	378246	2	WASHER, 16MM
12	140048	4	WASHER, SPRING, Belleville, M16,
13	100020	2	NUT, M16, Cl 8,
14	84989343	2	PLATE, ADJUSTING,
15	84989342	2	PLATE, ADJUSTING,
16	84989344	2	PLATE,
17	87025578	1	LEVER,
18	86507486	4	BOLT, CARRIAGE, Short NK, M8 x 20, Cl8.8, Full Thd,
19	9706690	4	NUT, M8, Cl 8,
20	84439654	2	ANGLE,
21	84437508	2	PLATE,
22	120104	6	SCREW, Hex, M8 x 20, 8.8,
23	86512439	8	SCREW, Short NK, M6 x 16, Cl8.8, Full Thd,
24	9500852	1	PLATE, SKID,
25	412649	16	WASHER, SPRING, Belleville, M6,
26	353308	8	NUT, M6 x 1, Cl 8,
27	9500851	1	PLATE, SKID,
28	120100	8	BOLT, Hex, M6 x 20, 8.8,
29	84071457	1	PLATE,
30	385922	2	SCREW, Hex, M16 x 45, 8.8,
31	321204	1	NIPPLE, LUBE, M6 x 1, 16mm lg,
32	84454379	1	PIN,
33	412365	2	SLEEVE,
34	393698	6	SCREW, Hex Soc Flat Hd, M10 x 25, 8.8, M10x25
35	84045488	2	SEAL PROTECTION,
36	87367412	2	STRIP, , ASN D572
37	87628224	1	WEAR STRIP, , ASN D572

13.210(C 01) PIVOTING FRAME - FOR LATERALE ONLY

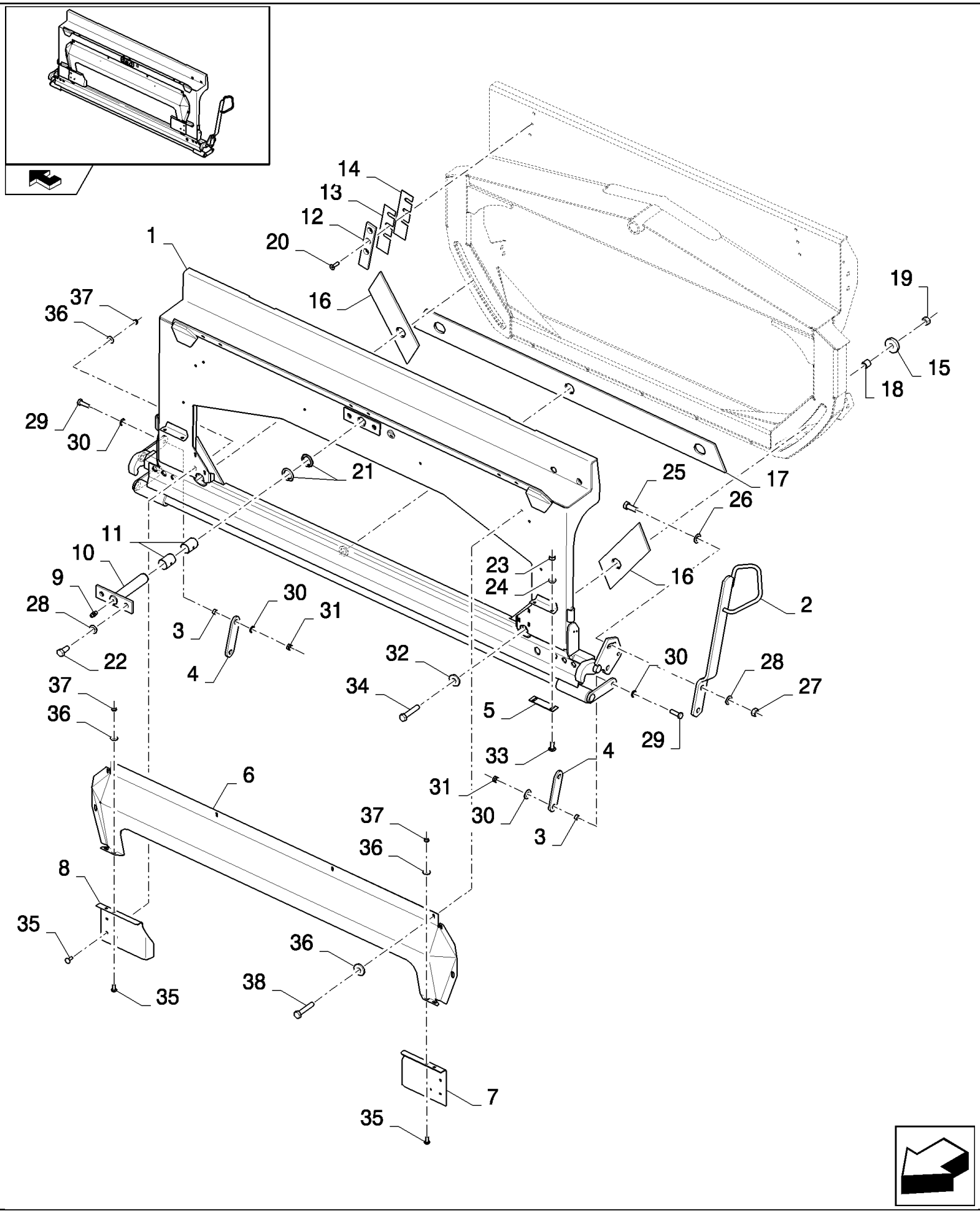

CSX7080 C659 - COMBINE (9/06-8/08)

13.210(C 01) PIVOTING FRAME - FOR LATERALE ONLY

ссылка	Номер детали	Кол-во	Описание
1	87522972	1	FRAME,
2	87025578	1	LEVER,
3	87646075	4	BUSHING,
4	87539147	2	PLATE,
5	84437508	2	PLATE,
6	84071457	1	PLATE,
7	87529869	1	PLATE, SKID,
8	87530733	1	PLATE, SKID, , BSN C614
8	87529867	1	PLATE, SKID, , ASN D615
9	321204	1	NIPPLE, LUBE, M6 x 1, 16mm lg,
10	84454379	1	PIN,
11	412365	2	SLEEVE,
12	87536978	2	SEAL PROTECTION,
13	87530798	2	PLATE,
14	87530790	2	PLATE,
15	913347	2	WASHER,
16	87525096	2	WEAR STRIP,
17	87525095	1	WEAR STRIP,
18	84071496	2	SPACER,
19	412066	2	NUT, LOCK, M16 x 2, Cl 8,
20	412466	6	SCREW, Hex Soc Flat Hd, M10 x 35, 8.8,
21	84018313	1	WASHER,
22	86508583	2	BOLT, Hex, M16 x 35, 8.8,
23	9706690	4	NUT, M8, Cl 8,
24	322358	4	WASHER, SPRING, Belleville, M8,
25	43168	2	BOLT, Hex, M16 x 40, 8.8,
26	378246	2	WASHER,
27	100020	2	NUT, M16, Cl 8,
28	140048	4	WASHER, SPRING, Belleville, M16,
29	86629541	4	BOLT, Hex, M12 x 40, 8.8, Full Thd,
30	86511324	8	WASHER, M12 x 24 x 2.5,
31	100038	4	NUT, M12 x 1.75, Cl 8,
32	86592702	2	WASHER, M16 x 45 x 6, HT,
33	86507486	4	BOLT, CARRIAGE, Short NK, M8 x 20, Cl8.8, Full Thd,
34	120093	2	BOLT, Hex, M16 x 80, 8.8,
35	86512439	10	SCREW, Short NK, M6 x 16, Cl8.8, Full Thd,
36	412649	18	WASHER, SPRING, Belleville, M6,
37	353308	10	NUT, M6 x 1, Cl 8,
38	120100	8	BOLT, Hex, M6 x 20, 8.8,

13.211(A 01) FEEDER FRAME

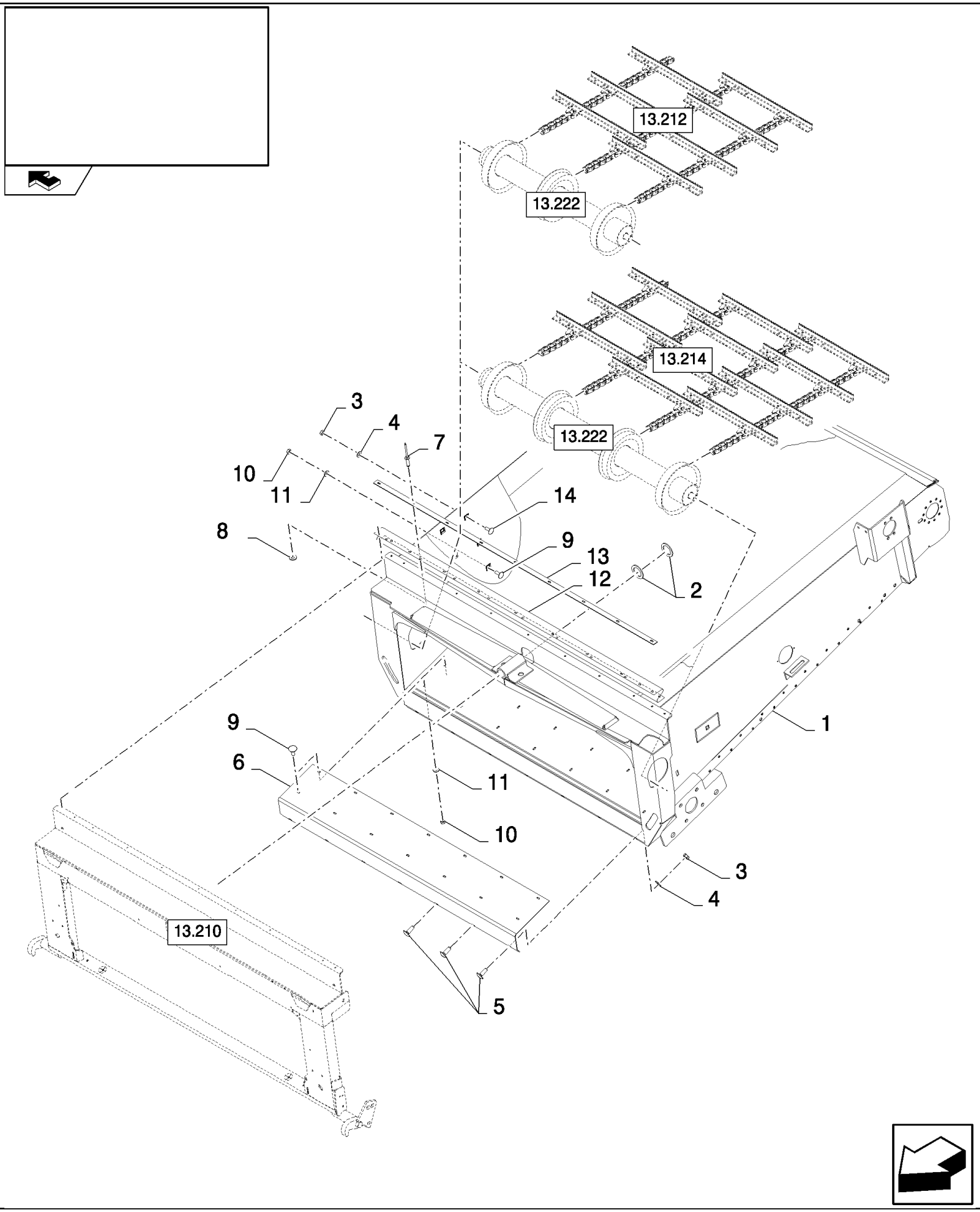

CSX7080 C659 - COMBINE (9/06-8/08)

13.211(A 01) FEEDER FRAME

ссылка	Номер детали	Кол-во	Описание
1	84981290	1	STRAW ELEVATOR,
2	84018313	2	WASHER, 35MM
3	9706690	11	NUT, M8, Cl 8,
4	322358	11	WASHER, SPRING, Belleville, M8,
5	86507486	7	BOLT, CARRIAGE, Short NK, M8 x 20, Cl8.8, Full Thd,
6	84981304	1	PLATE,
7	84007558	11	RIVET,
8	9824326	11	WASHER, M5, 5MM
9	86512439	15	SCREW, Short NK, M6 x 16, Cl8.8, Full Thd,
10	9706755	15	NUT, M6, Cl 8,
11	322357	15	WASHER, SPRING, Belleville, M6,
12	84443712	1	CANVAS,
13	84071233	1	PLATE, FIXING,
14	120038	4	BOLT, CARRIAGE, Short NK, M8 x 30, Cl8.8, Full Thd,

13.211(B 01) FEEDER FRAME - FOR LATERALE ONLY

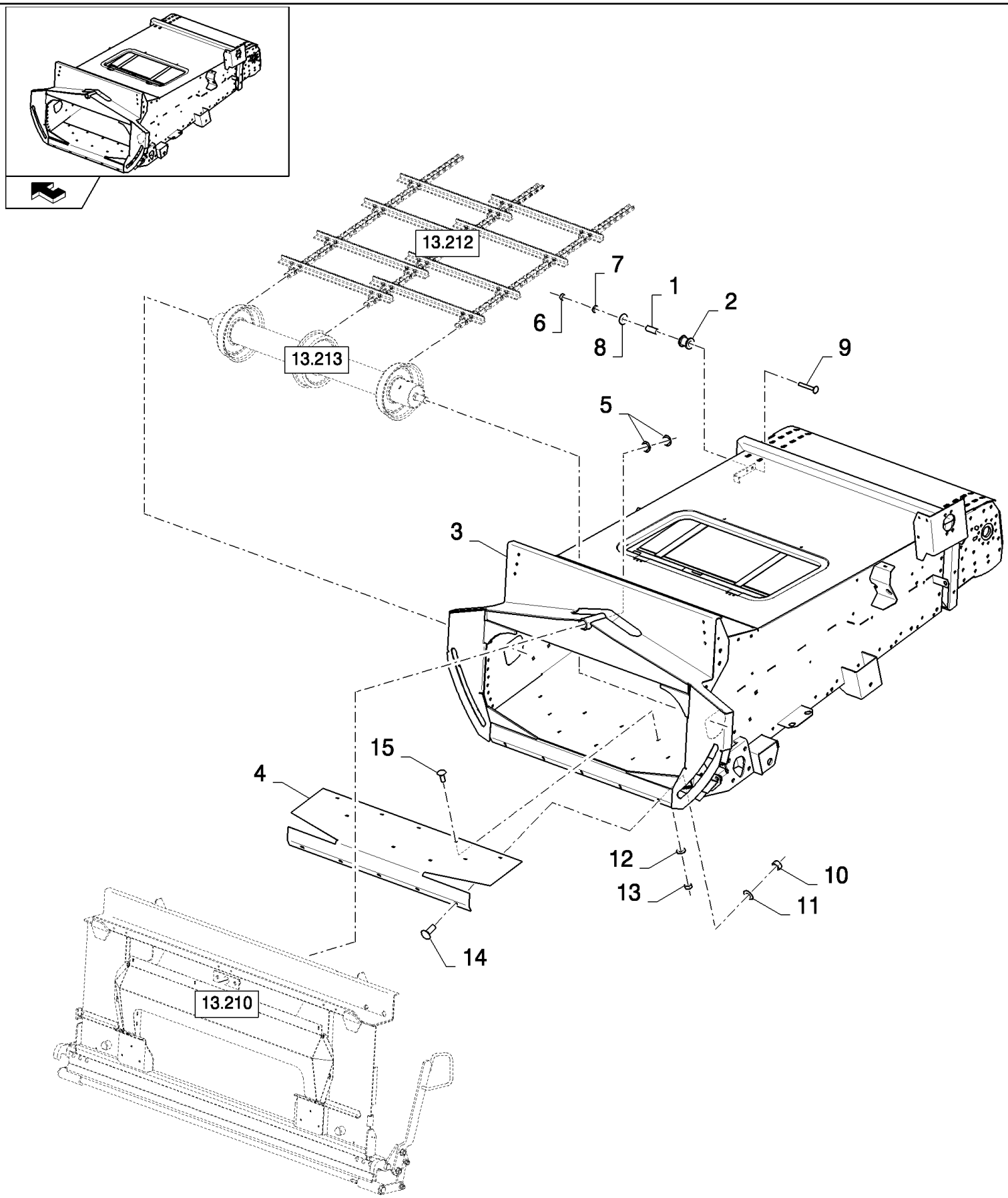

CSX7080 C659 - COMBINE (9/06-8/08)

13.211(B 01) FEEDER FRAME - FOR LATERALE ONLY

ссылка	Номер детали	Кол-во	Описание
1	9815355	1	SPACER,
2	9815357	1	ROLLER,
3	87532867	1	STRAW ELEVATOR,
4	87523042	1	PLATE, WEAR,
5	84018313	2	WASHER,
6	100016	1	NUT, M10, Cl 8,
7	140045	1	WASHER, SPRING, Belleville, M10,
8	140042	1	WASHER, M10 x 34 x 3,
9	374894	1	BOLT, CARRIAGE, Short NK, M10 x 70, Cl8.8,
10	9706690	5	NUT, M8, Cl 8,
11	322358	5	WASHER, SPRING, Belleville, M8,
12	322357	10	WASHER, SPRING, Belleville, M6,
13	9706755	10	NUT, M6, Cl 8,
14	86507486	5	BOLT, CARRIAGE, Short NK, M8 x 20, Cl8.8, Full Thd,
15	86512439	10	SCREW, Short NK, M6 x 16, Cl8.8, Full Thd,

13.212(B 01) ELEVATOR CHAIN - FOR LATERALE ONLY

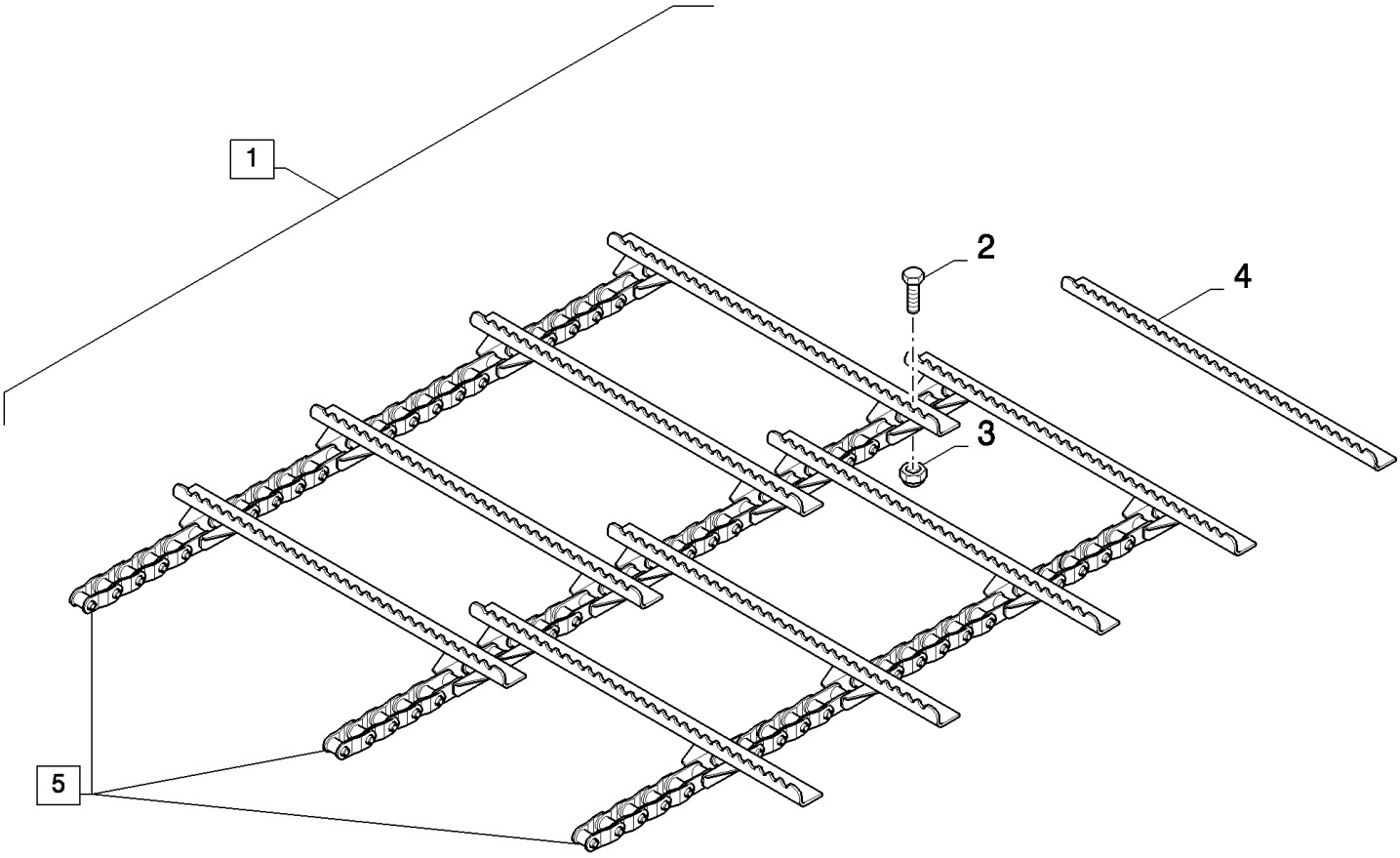

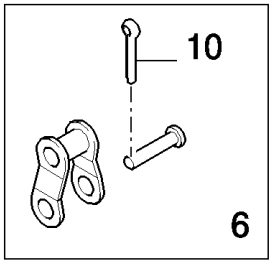

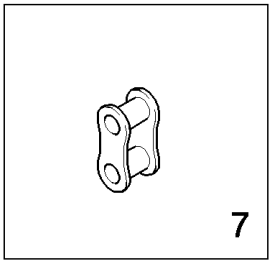

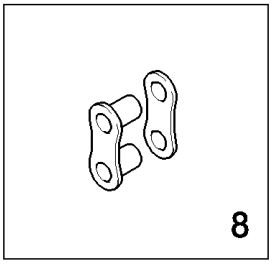

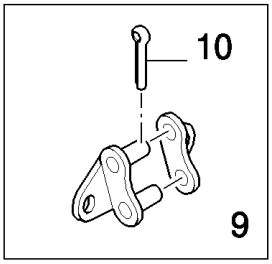

CSX7080 C659 - COMBINE (9/06-8/08)

13.212(B 01) ELEVATOR CHAIN - FOR LATERALE ONLY

ссылка	Номер детали	Кол-во	Описание
1	84441579	1	CHAIN, (2 to 10)
2	120104	112	SCREW, Hex, M8 x 20, 8.8,
3	86629542	112	NUT, LOCK, M8 x 1.25, Cl 8,
4	439178	28	BAR,
5	84441577	1	SET OF CHAINS, (6 to 10)
6	40242	AR	LINK, OFFSET,
7	86595253	AR	LINK, CHAIN,
8	40241	AR	LINK, CONNECTING,
9	9835830	AR	LINK, CONNECTING,
10	84058826	AR	

13.213(A 01) LOWER SHAFT

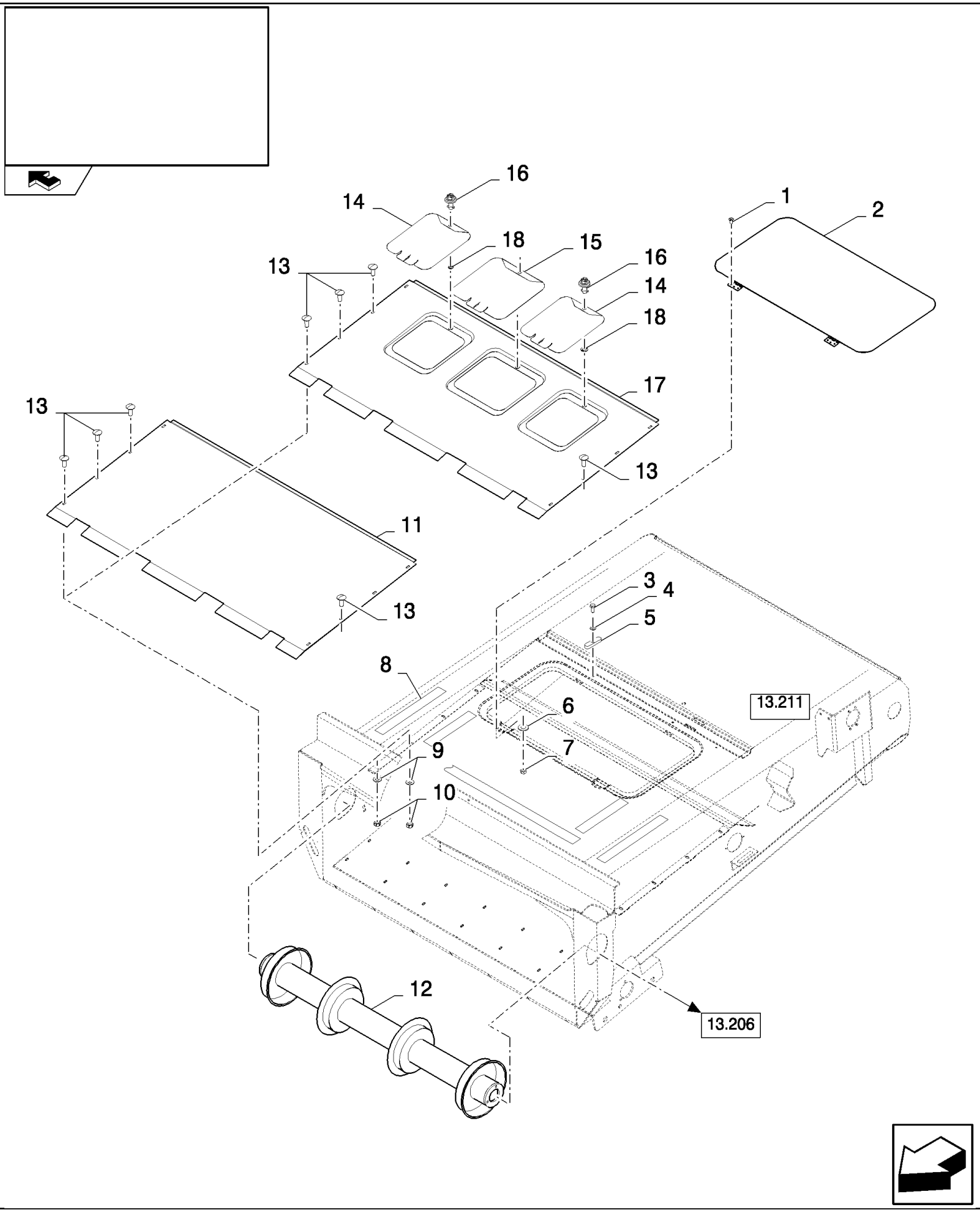

CSX7080 C659 - COMBINE (9/06-8/08)

13.213(A 01) LOWER SHAFT

ссылка	Номер детали	Кол-во	Описание
1	120100	6	BOLT, Hex, M6 x 20, 8.8,
2	84982332	1	COVER, , FOR SMALL GRAIN ONLY, FOR STANDARD ONLY
3	120104	2	SCREW, Hex, M8 x 20, 8.8,
4	378243	2	WASHER, M8,
5	84982331	2	CLIP,
6	322357	6	WASHER, SPRING, Belleville, M6,
7	9706755	6	NUT, M6, Cl 8,
8	401502	AR	STRIP, ANTI-SKID, 51mm x 18.3 Roll - Cut to Size - L=1.97M
9	9706690	8	NUT, M8, Cl 8,
10	322358	8	WASHER, SPRING, Belleville, M8,
11	87340925	1	SHEET, , FOR SMALL GRAIN ONLY
12	87318775	1	ROLLER, CONVEYOR, , FOR SMALL GRAIN ONLY, FOR STANDARD ONLY
13	86507486	8	BOLT, CARRIAGE, Short NK, M8 x 20, Cl8.8, Full Thd,
14	84448921	2	COVER, , FOR STANDARD ONLY, FOR 3HB ONLY
15	84448919	1	COVER, , FOR 3HB ONLY, FOR STANDARD ONLY
16	89514603	3	LOCK,
17	84449007	1	PLATE, , FOR STANDARD ONLY, FOR 3HB ONLY
18	9514605	3	WASHER,

13.214(01) ELEVATOR CHAIN

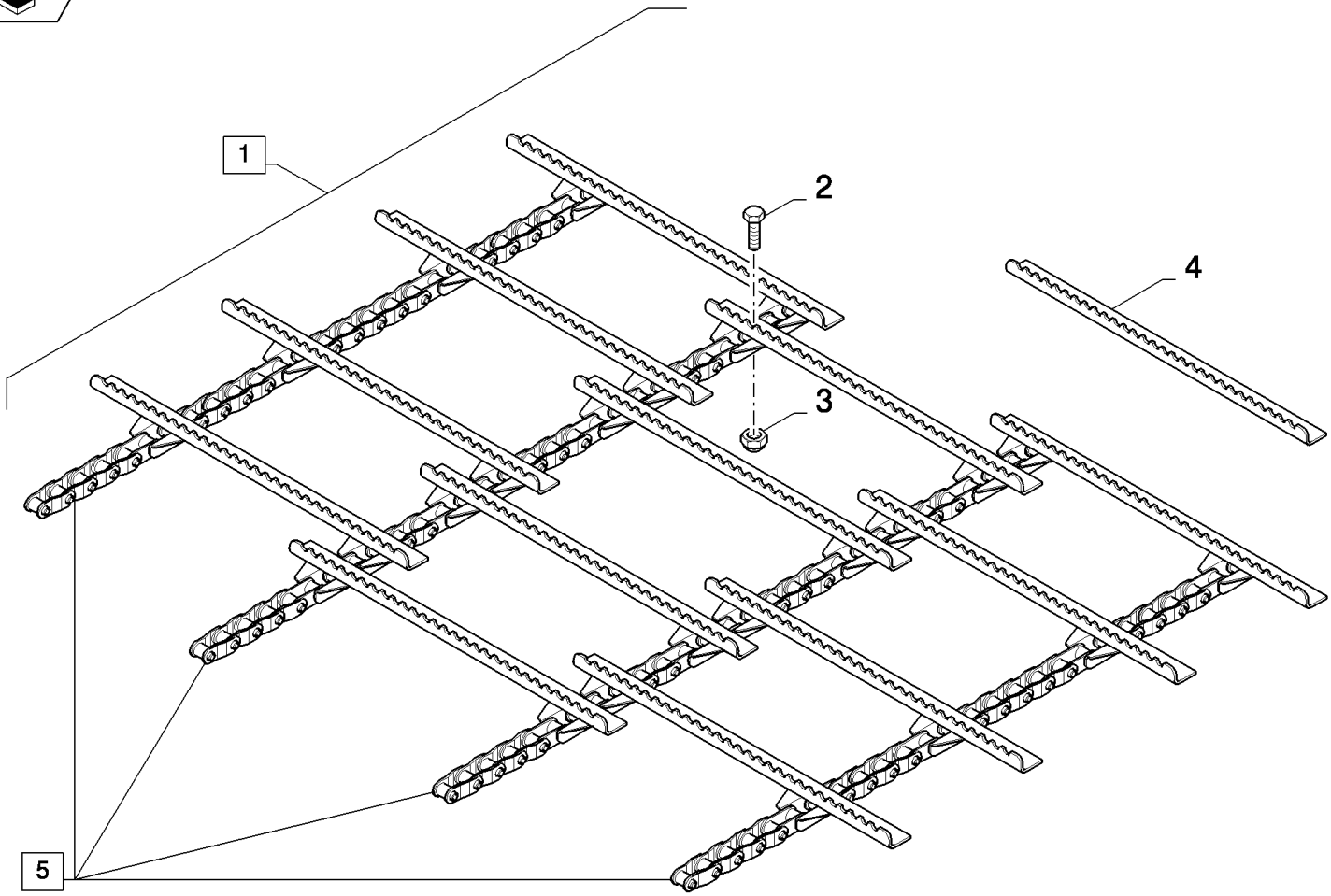

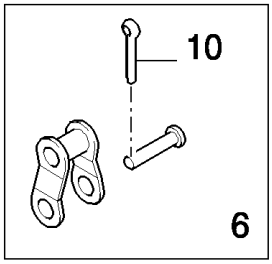

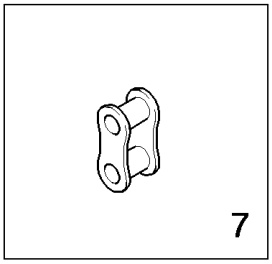

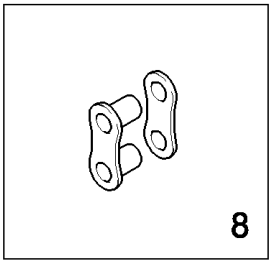

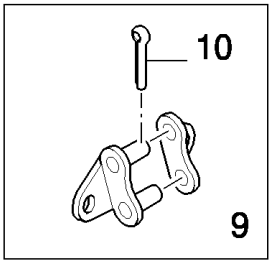

CSX7080 C659 - COMBINE (9/06-8/08)

13.214(01) ELEVATOR CHAIN

ссылка	Номер детали	Кол-во	Описание
1	84441580	1	CHAIN, (2 to 10)
2	120104	168	SCREW, Hex, M8 x 20, 8.8,
3	86629542	168	NUT, LOCK, M8 x 1.25, Cl 8,
4	84440367	42	BAR,
5	84441578	1	SET OF CHAINS, (6 to 10)
6	40242	AR	LINK, OFFSET,
7	86595253	AR	LINK, CHAIN,
8	40241	AR	LINK, CONNECTING,
9	9835830	AR	LINK, CONNECTING,
10	84058826	AR	

13.215(01) STRAW ELEVATOR , SHIELDS LH

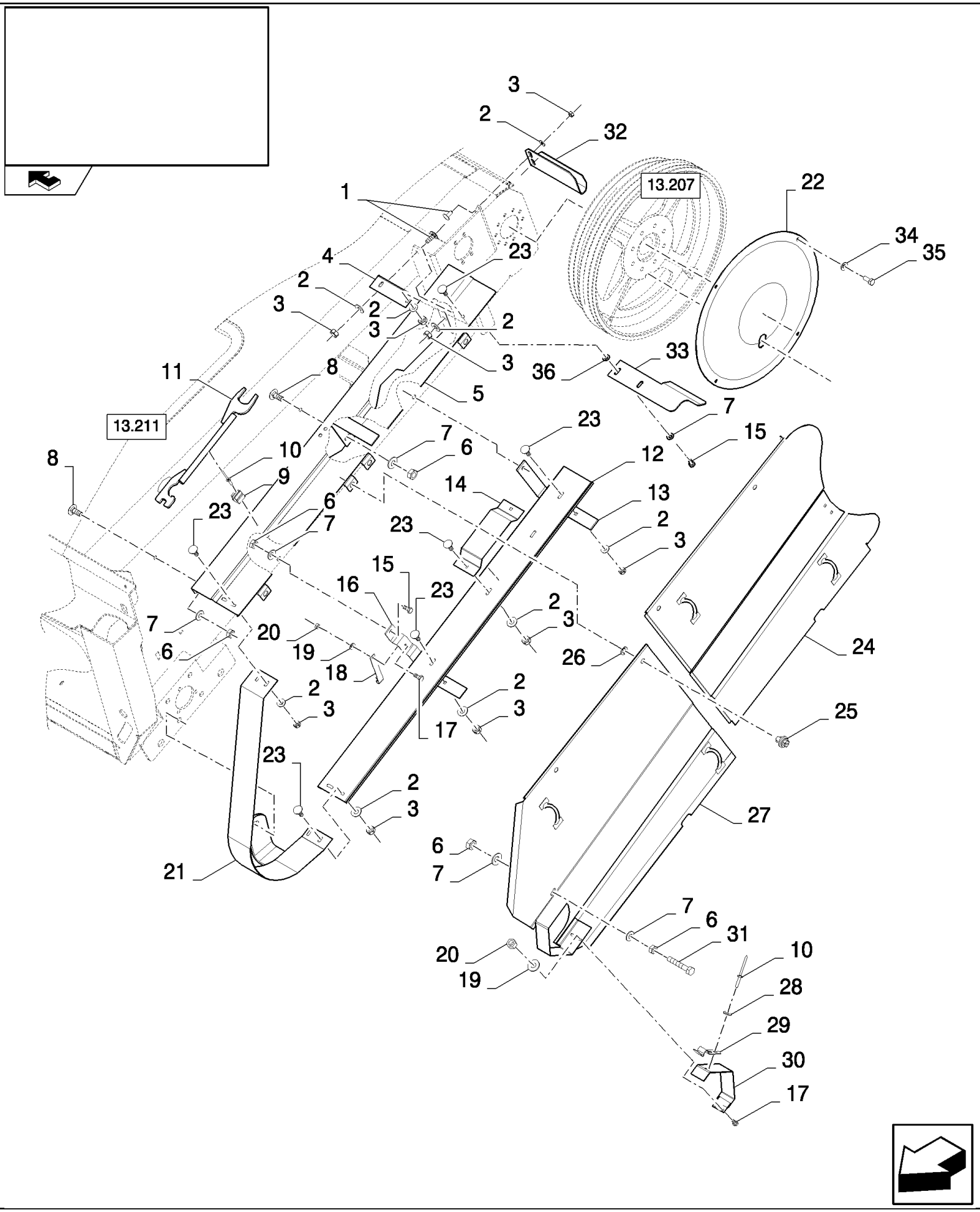

CSX7080 C659 - COMBINE (9/06-8/08)

13.215(01) STRAW ELEVATOR , SHIELDS LH

ссылка	Номер детали	Кол-во	Описание
1	86512420	5	BOLT, CARRIAGE, Short NK, M8 x 20, Cl8.8, Full Thd,
2	322358	15	WASHER, SPRING, Belleville, M8,
3	9706690	15	NUT, M8, Cl 8,
4	84981514	1	BRACKET,
5	84980240	1	SHIELD,
6	100016	5	NUT, M10, Cl 8,
7	140045	7	WASHER, SPRING, Belleville, M10, , BSN C607
7	140045	5	WASHER, SPRING, Belleville, M10, , ASN D608
8	338949	2	BOLT, CARRIAGE, Short NK, M10 x 25, Cl8.8, Full Thd,
9	323307	1	CLAMP,
10	445394	3	RIVET, Pop, M4.8 x 12.7,
11	84431038	1	KEY, LOCK,
12	84981513	1	SHIELD,
13	84981515	1	BRACKET,
14	84004143	1	BRACKET,
15	43140	3	BOLT, Hex, M10 x 30, 8.8, Full Thd, M10x25, BSN C607
16	84981512	1	BRACKET,
17	86508568	3	SCREW, Hex, M6 x 16, 8.8,
18	84072277	1	HOOK,
19	322357	3	WASHER, SPRING, Belleville, M6,
20	9706755	3	NUT, M6, Cl 8,
21	84449029	1	SHIELD,
22	84981403	1	SHIELD,
23	86619060	10	BOLT, CARRIAGE, Short NK, M8 x 16, Cl8.8, Full Thd,
24	84449590	1	SHIELD,
25	89514603	4	LOCK,
26	9514605	4	WASHER,
27	84982313	1	SHIELD,
28	86588450	2	WASHER, M6,
29	9801069	1	LATCH,
30	84981539	1	SHIELD,
31	120070	1	BOLT, Hex, M10 x 60, 8.8,
32	84982310	1	PLATE,
33	84983437	1	GUIDE, , BSN C607
34	412650	4	WASHER, Belleville, M8,
35	120104	4	SCREW, Hex, M8 x 20, 8.8,
36	86592712	2	WASHER, , BSN C607

13.215(A 01) FEEDER SHIELDINGS - FOR LATERALE ONLY

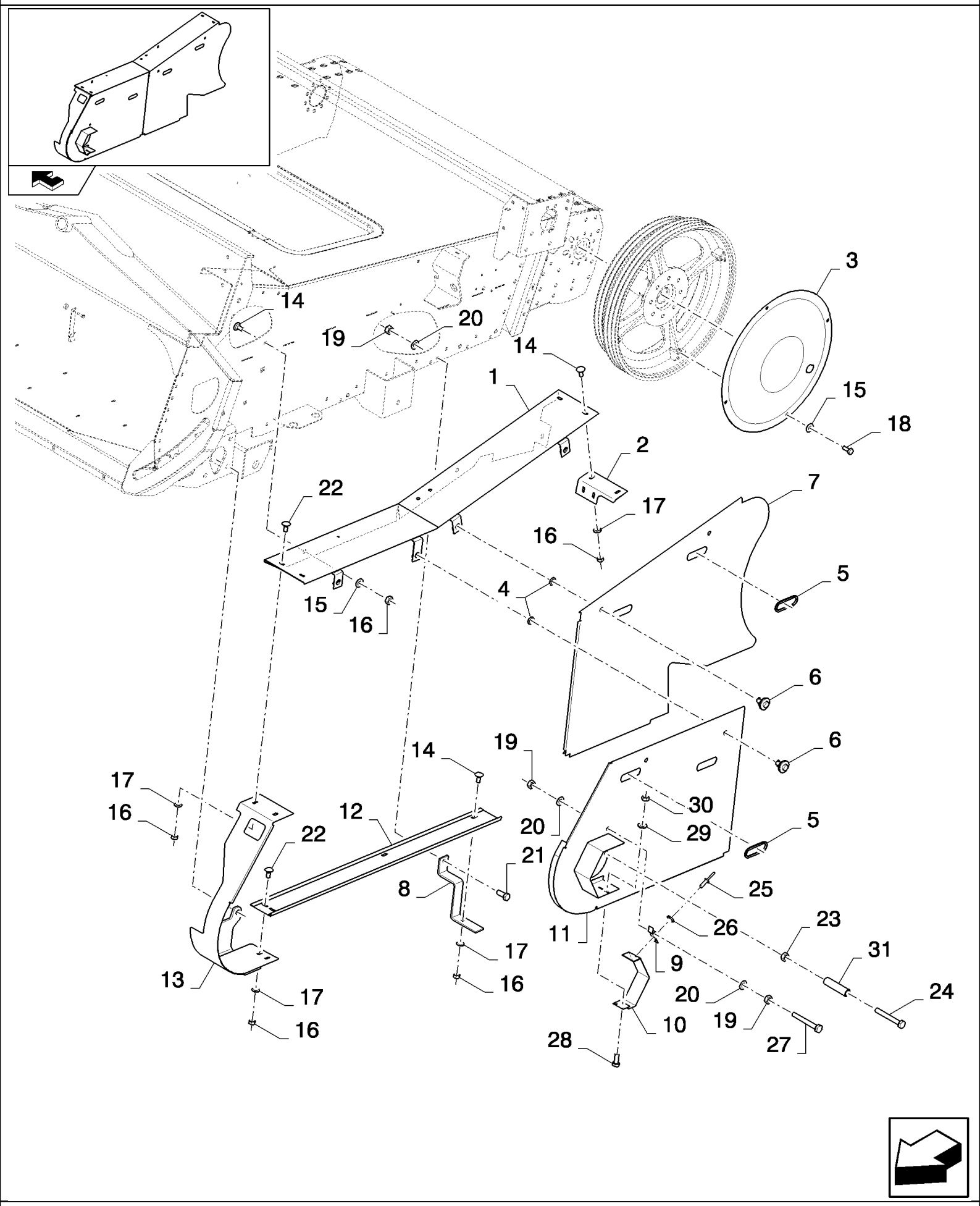

CSX7080 C659 - COMBINE (9/06-8/08)

13.215(A 01) FEEDER SHIELDINGS - FOR LATERALE ONLY

ссылка	Номер детали	Кол-во	Описание
1	87624445	1	SHIELD,
2	87627131	1	SUPPORT,
3	84981403	1	SHIELD,
4	9514605	4	WASHER,
5	80401270	1	PROFILE, L=1.00m
6	9514603	4	LOCK,
7	87624452	1	SHIELD,
8	87537791	2	SUPPORT,
9	9801069	1	LATCH,
10	84980311	1	
11	87624447	1	SHIELD,
12	87629778	1	SHIELD,
13	87624449	1	SHIELD,
14	86512420	7	BOLT, CARRIAGE, Short NK, M8 x 20, Cl8.8, Full Thd,
15	421650	6	
16	9706690	13	NUT, M8, Cl 8,
17	322358	11	WASHER, SPRING, Belleville, M8,
18	120104	4	SCREW, Hex, M8 x 20, 8.8,
19	100016	4	NUT, M10, Cl 8,
20	140045	4	WASHER, SPRING, Belleville, M10,
21	43139	2	SCREW, Hex, M10 x 25, 8.8, Full Thd,
22	86619060	4	BOLT, CARRIAGE, Short NK, M8 x 16, Cl8.8, Full Thd,
23	100016	1	NUT, M10, Cl 8,
24	43144	1	SCREW, Hex, M10 x 70, 8.8,
25	445395	2	RIVET, Pop, M4.8 x 18.1,
26	86588450	2	WASHER, M6,
27	120073	1	BOLT, Hex, M10 x 80, 8.8,
28	86508568	2	SCREW, Hex, M6 x 16, 8.8,
29	322357	2	WASHER, SPRING, Belleville, M6,
30	9706755	2	NUT, M6, Cl 8,
31	87736136	1	BUSHING, , ASN D615

13.215(B 01) FEEDER SHIELDINGS - FOR LATERALE ONLY

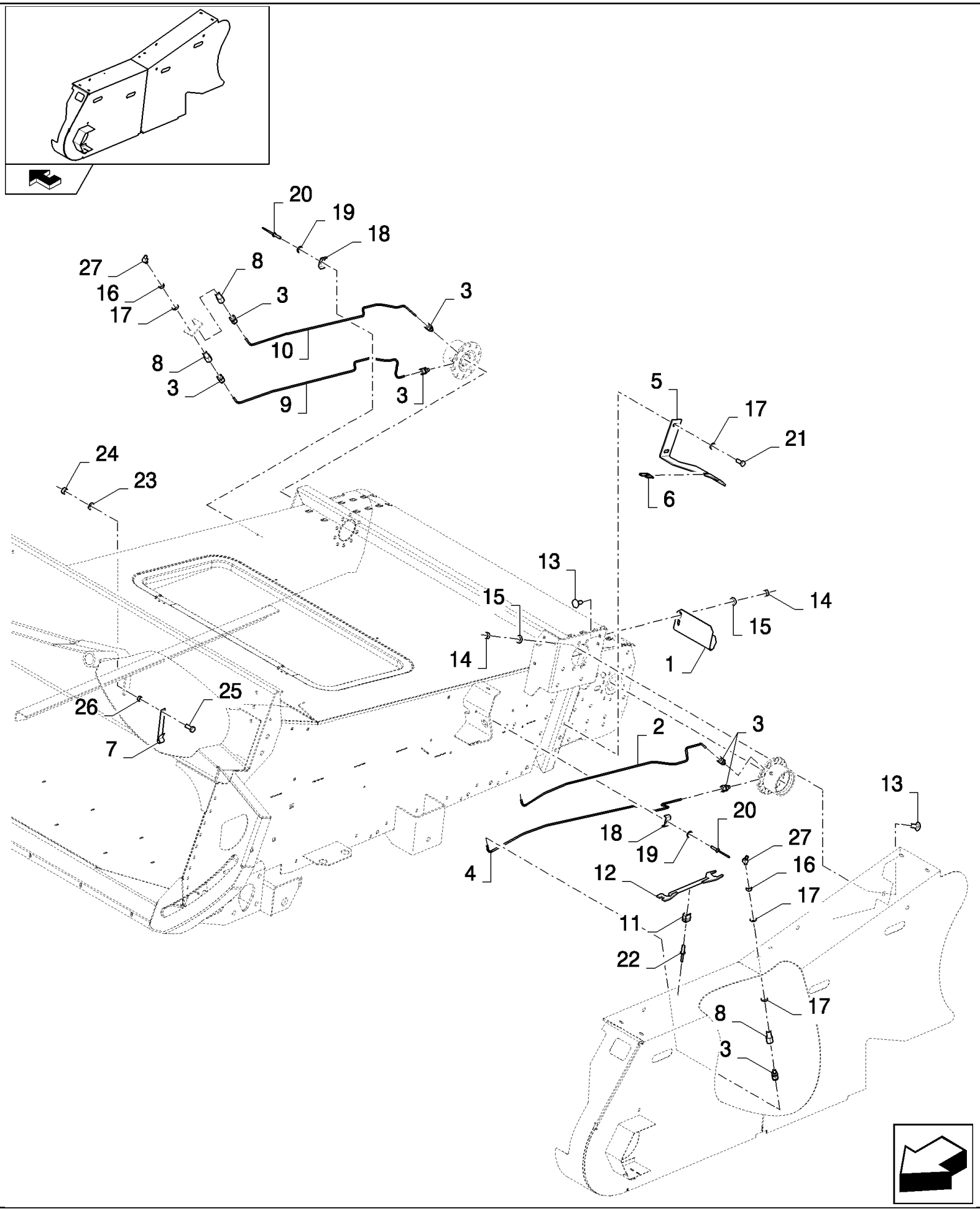

CSX7080 C659 - COMBINE (9/06-8/08)

13.215(B 01) FEEDER SHIELDINGS - FOR LATERALE ONLY

ссылка	Номер детали	Кол-во	Описание
1	84982310	1	PLATE,
2	87666686	1	DUCT,
3	159338	8	CONNECTOR, HYD.,
4	87666648	1	DUCT,
5	87541717	1	GUIDE,
6	80401223	1	PROFILE, L=0.10m
7	332672	1	HOOK,
8	84981173	4	CONNECTOR, HYD.,
9	87585014	1	DUCT,
10	87585019	1	DUCT,
11	323307	1	CLAMP,
12	84431028	1	, BSN C614
12	84431038	1	KEY, LOCK, , ASN D615
13	86512420	4	BOLT, CARRIAGE, Short NK, M8 x 20, Cl8.8, Full Thd,
14	9706690	2	NUT, M8, Cl 8,
15	322358	2	WASHER, SPRING, Belleville, M8,
16	100016	4	NUT, M10, Cl 8,
17	140045	8	WASHER, SPRING, Belleville, M10,
18	84814933	2	CLAMP,
19	140014	2	WASHER, M5 x 10 x 1,
20	445395	2	RIVET, Pop, M4.8 x 18.1,
21	43139	2	SCREW, Hex, M10 x 25, 8.8, Full Thd,
22	445394	1	RIVET, Pop, M4.8 x 12.7,
23	322357	1	WASHER, SPRING, Belleville, M6,
24	9706755	1	NUT, M6, Cl 8,
25	86977786	1	BOLT, Hex, M6 x 25, 8.8,
26	200202	1	RING,
27	84814929	4	NIPPLE, LUBE,

13.217(01) LOWER SHAFT, 2HB

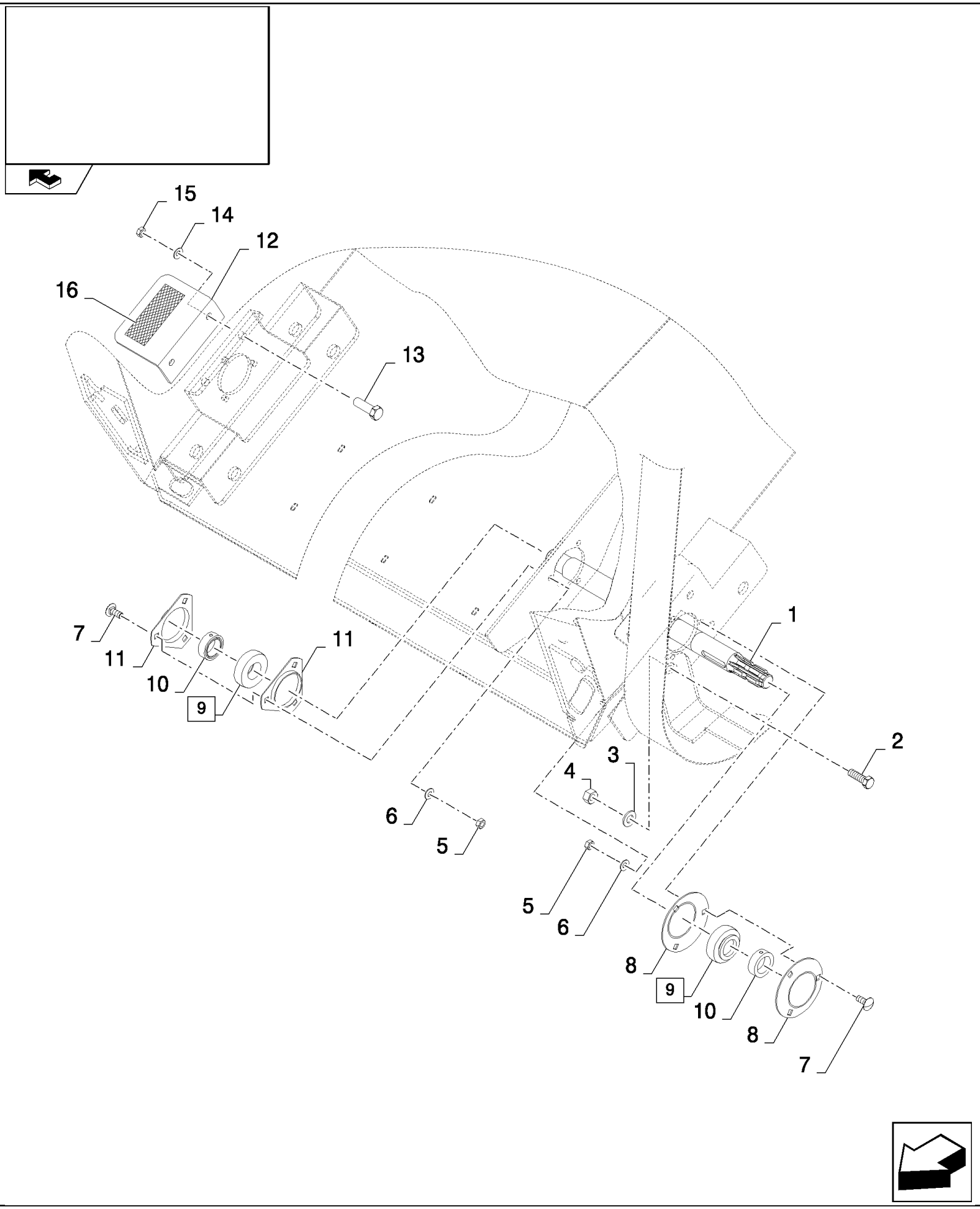

CSX7080 C659 - COMBINE (9/06-8/08)

13.217(01) LOWER SHAFT, 2HB

ссылка	Номер детали	Кол-во	Описание
1	84980919	1	SHAFT,
2	120090	2	SCREW, Hex, M16 x 50, 8.8,
3	140048	2	WASHER, SPRING, Belleville, M16,
4	100020	2	NUT, M16, Cl 8,
5	100016	6	NUT, M10, Cl 8,
6	140045	6	WASHER, SPRING, Belleville, M10,
7	338949	6	BOLT, CARRIAGE, Short NK, M10 x 25, Cl8.8, Full Thd,
8	36403	2	FLANGE,
9	322360	2	BEARING, BALL, (10)
10	NSS	2	NOT SERVICED SEPARATELY,
11	86620026	2	FLANGE,
12	84461204	1	PLATE,
13	89706687	2	SCREW, M12x30
14	140046	2	WASHER, Belleville, M12,
15	89706685	2	NUT, M12
16	401502	AR	STRIP, ANTI-SKID,

13.218(01) STRAW ELEVATOR, GUIDE ROLL

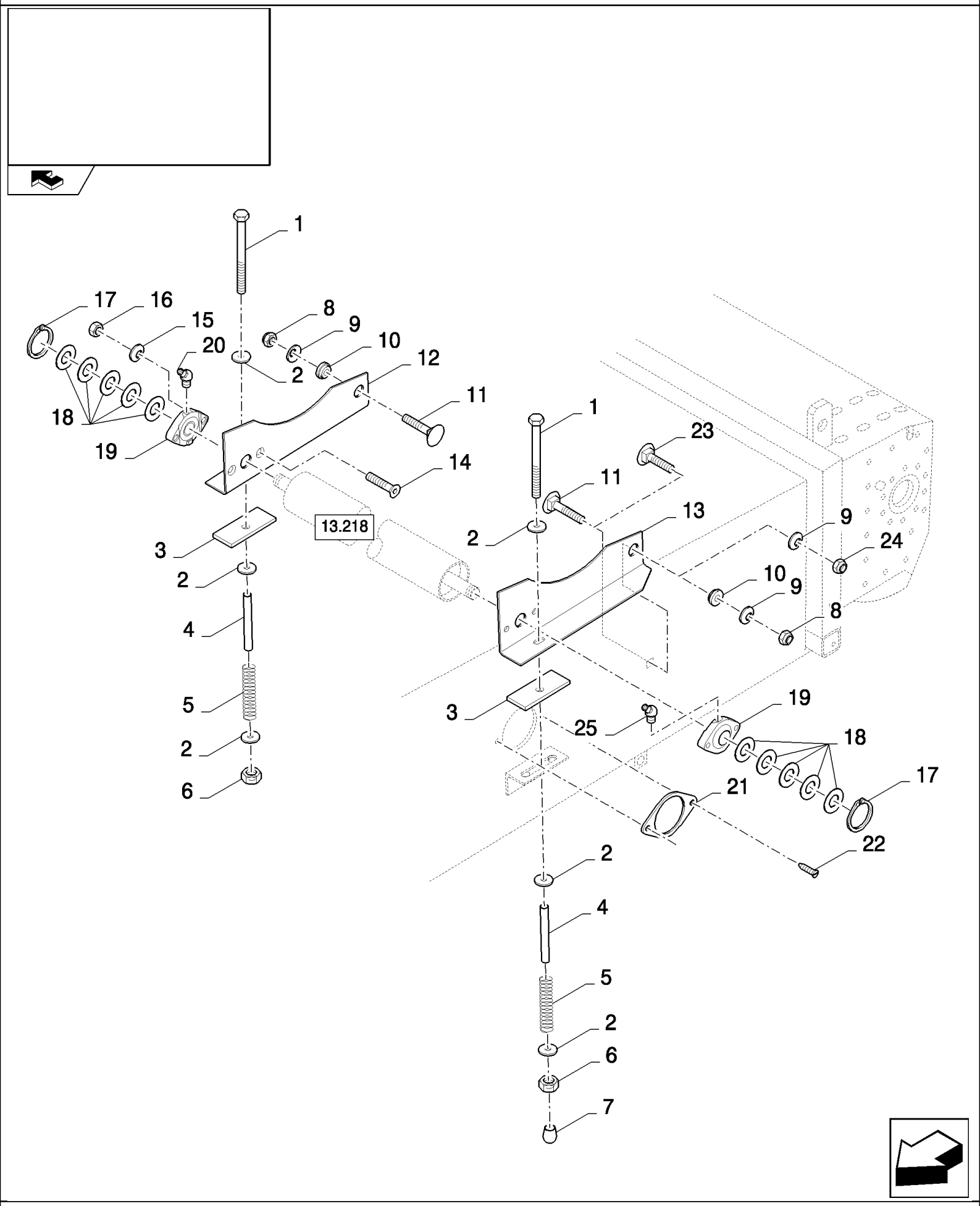

CSX7080 C659 - COMBINE (9/06-8/08)

13.218(01) STRAW ELEVATOR, GUIDE ROLL

ссылка	Номер детали	Кол-во	Описание
1	412579	2	BOLT, Hex, M10 x 230, 8.8, M10x230
2	9832748	6	WASHER, 11MM
3	9500474	2	PAD, RUBBER,
4	84334391	2	TUBE,
5	354085	2	SPRING,
6	412141	2	NUT, LOCK, M10 x 1.5, Cl 8,
7	84005018	1	PLUG,
8	100038	2	NUT, M12 x 1.75, Cl 8,
9	140046	4	WASHER, Belleville, M12,
10	9500475	2	BUSHING,
11	120044	2	BOLT, CARRIAGE, Short NK, M12 x 30, Cl8.8, Full Thd,
12	84039236	1	SUPPORT, RH
13	84039235	1	SUPPORT, LH
14	412466	4	SCREW, Hex Soc Flat Hd, M10 x 35, 8.8, M10x40
15	140045	4	WASHER, SPRING, Belleville, M10,
16	100016	4	NUT, M10, Cl 8,
17	370002	2	RING, SNAP, M25, Ext,
18	140229	AR	WASHER, 26MM
19	9514667	2	BEARING ASSY,
20	84814929	1	NIPPLE, LUBE,
21	378663	2	COVER,
22	331619	4	SCREW,
23	374895	2	BOLT, CARRIAGE, Short NK, M12 x 25, Cl8.8, Full Thd,
24	9706685	2	NUT, M12, Cl 8,
25	323713	1	NIPPLE, LUBE,

13.218(B 01) STRAW ELEVATOR, GUIDE ROLL

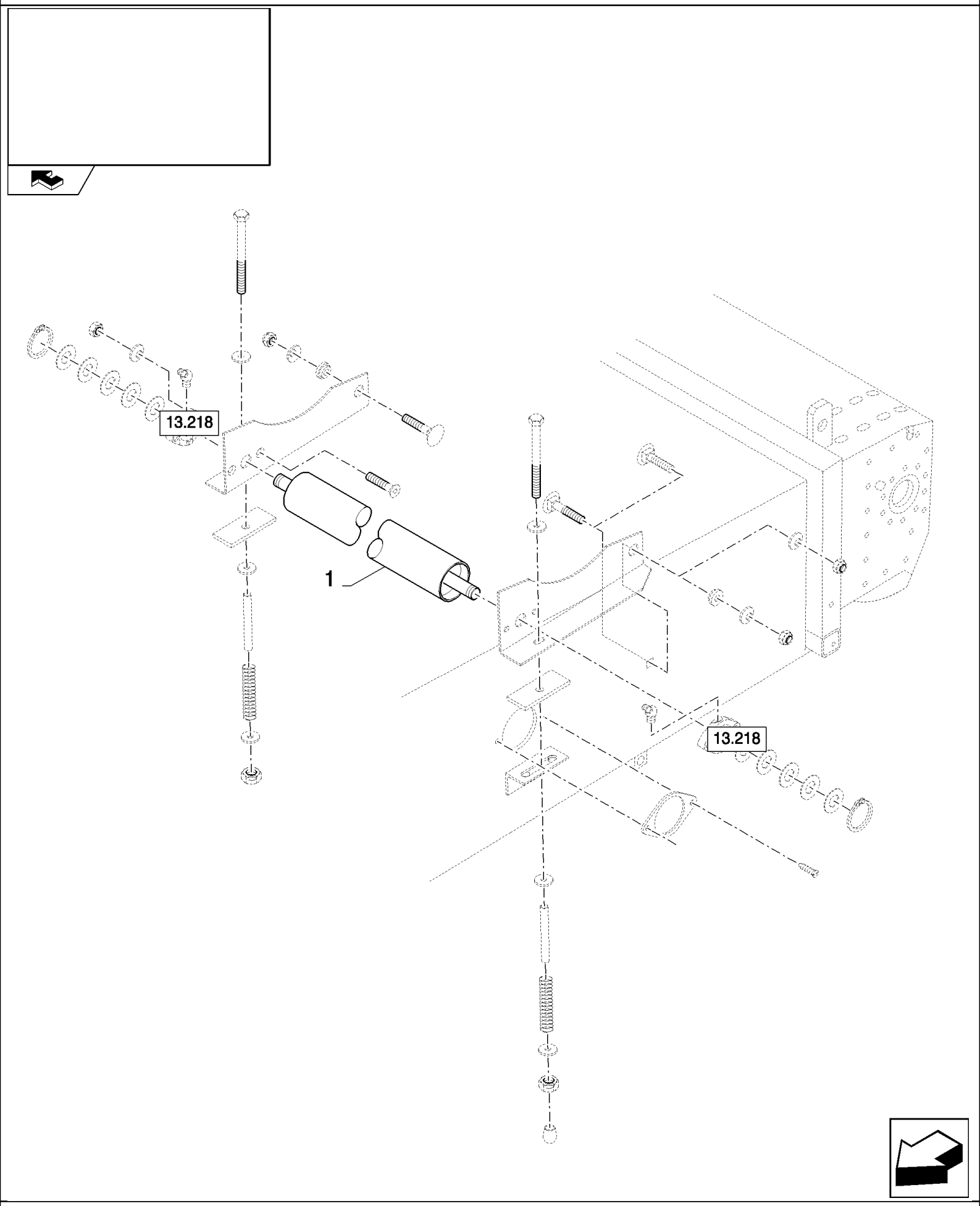

CSX7080 C659 - COMBINE (9/06-8/08)

13.218(B 01) STRAW ELEVATOR, GUIDE ROLL

ссылка	Номер детали	Кол-во	Описание
1	84071544	1	ROLLER, CONVEYOR,

13.220(A 01) ANTIWRAP SHIELDS

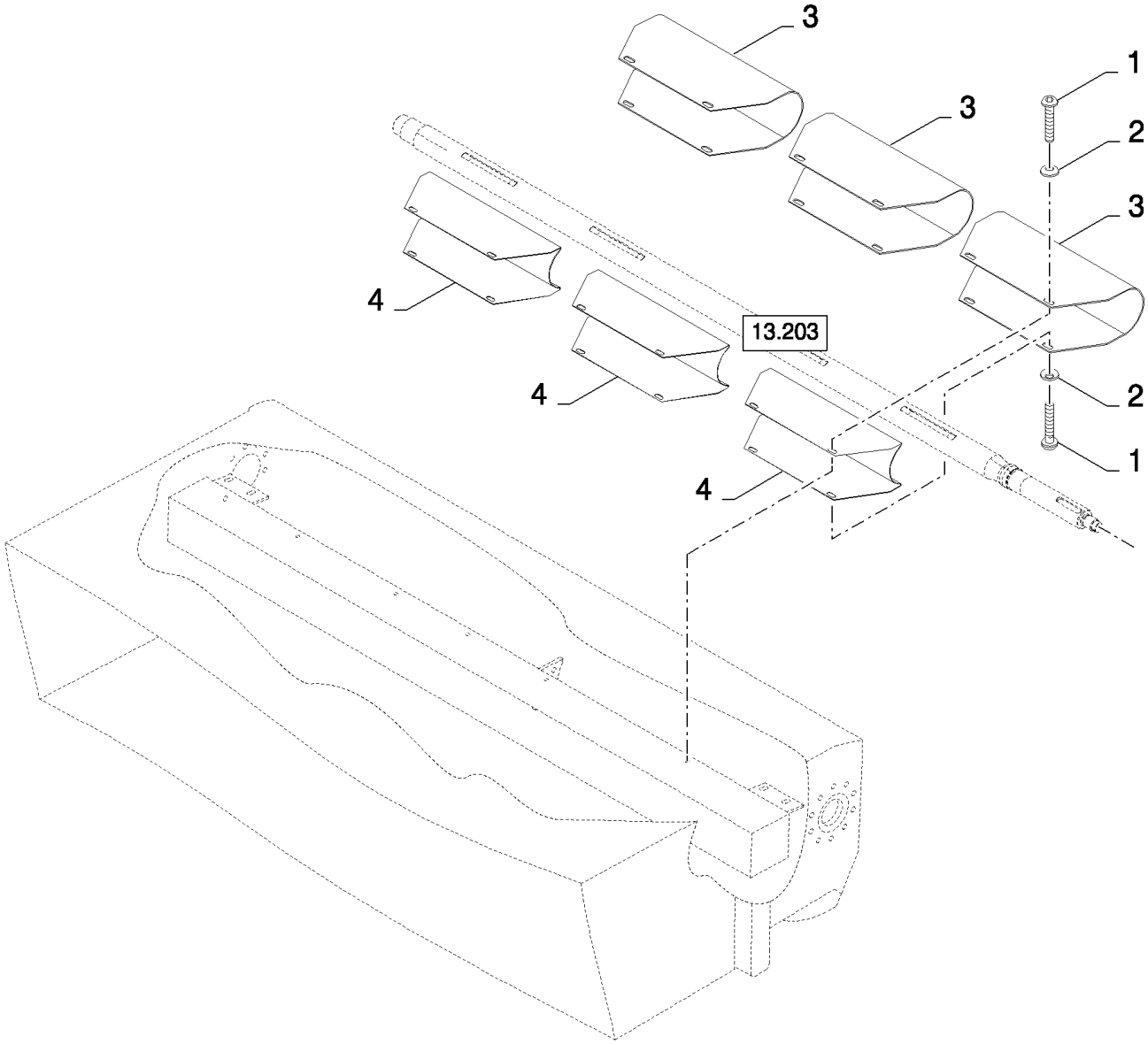

CSX7080 C659 - COMBINE (9/06-8/08)

13.220(A 01) ANTIWRAP SHIELDS

ссылка	Номер детали	Кол-во	Описание
1	86512788	12	SCREW, M8x30
2	412650	12	WASHER, Belleville, M8,
3	84072031	3	SHIELD,
4	84073716	3	SHIELD,

13.224(A 01) ANTIWRAP SHIELDS

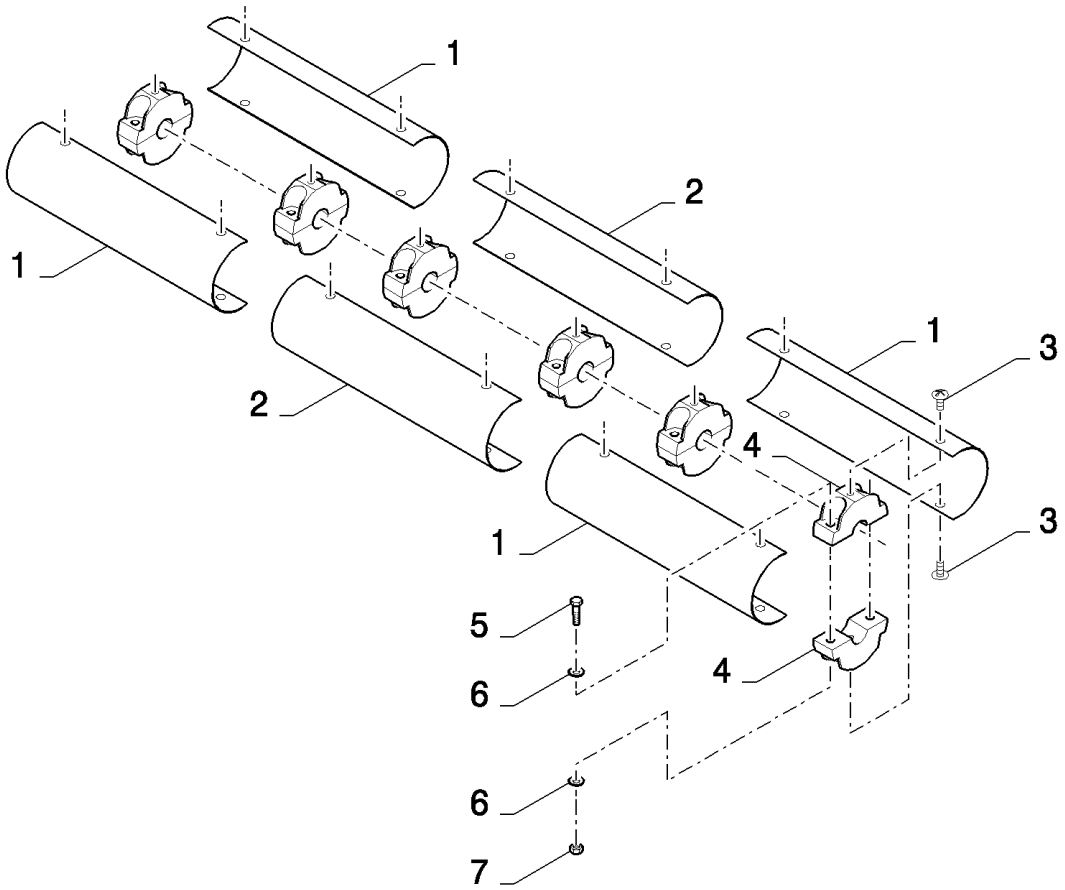

CSX7080 C659 - COMBINE (9/06-8/08)

13.224(A 01) ANTIWRAP SHIELDS

ссылка	Номер детали	Кол-во	Описание
1	84022121	4	SHIELD,
2	84449037	2	SHIELD,
3	62087	12	SCREW, M8x20
4	9513095	12	CLAMP,
5	386045	12	BOLT, Hex, M8 x 45, 8.8,
6	86511315	24	WASHER, M8 x 16 x 1.6,
7	86629542	12	NUT, LOCK, M8 x 1.25, Cl 8,

13.228(01) ELEVATOR SAFETY DEVICES, GERMANY

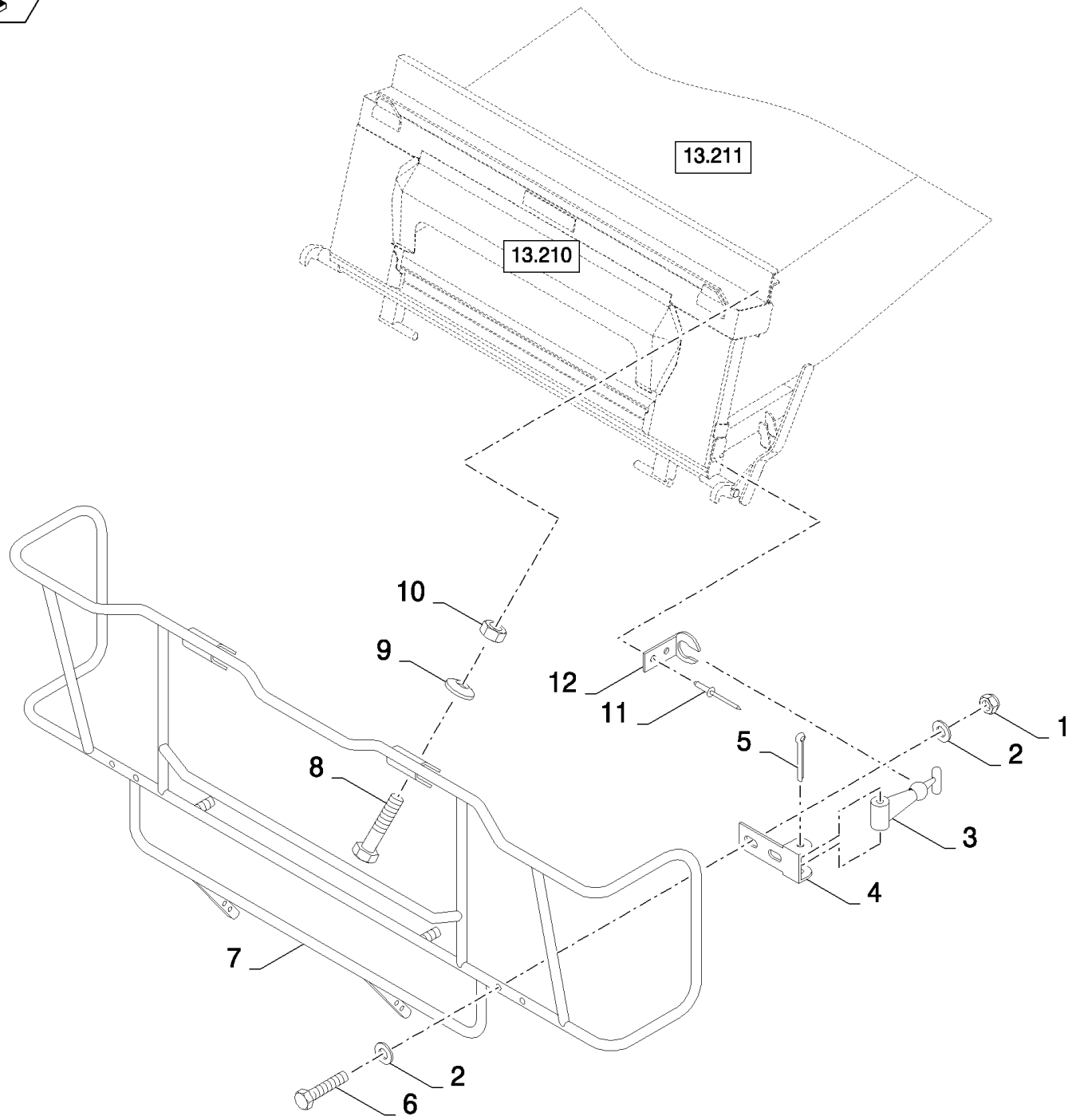

CSX7080 C659 - COMBINE (9/06-8/08)

13.228(01) ELEVATOR SAFETY DEVICES, GERMANY

ссылка	Номер детали	Кол-во	Описание
1	353308	4	NUT, M6 x 1, Cl 8,
2	86588450	8	WASHER, M6,
3	353067	2	HANDLE,
4	350918	2	BRACKET,
5	300416	2	PIN, SPLIT (COTTER), M4 x 50,
6	120102	4	SCREW, Hex, M6 x 40, 8.8, Full Thd,
7	419643	1	SHIELD,
8	120061	2	BOLT, Hex, M8 x 60, 8.8,
9	322358	2	WASHER, SPRING, Belleville, M8,
10	9706690	2	NUT, M8, Cl 8,
11	425525	4	RIVET, RIVET
12	453857	2	CLIP,

13.245(01) NARROWING PLATES - STRAW ELEVATOR

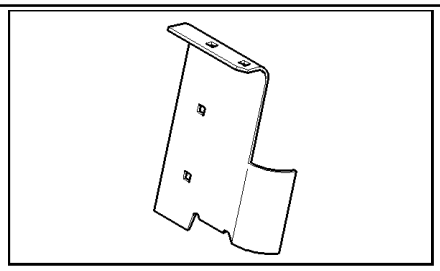

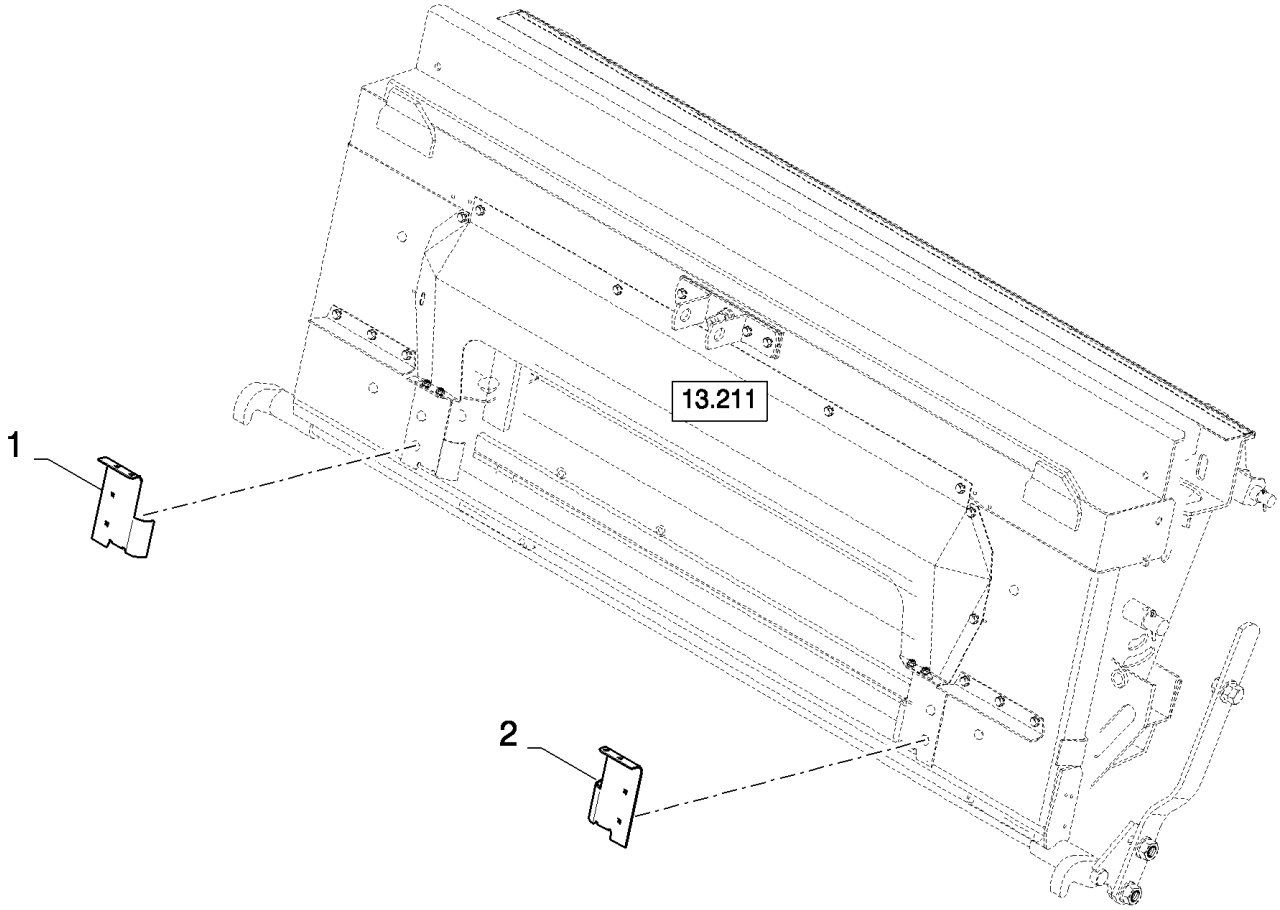

CSX7080 C659 - COMBINE (9/06-8/08)

13.245(01) NARROWING PLATES - STRAW ELEVATOR

ссылка	Номер детали	Кол-во	Описание
1	87696896	1	DEFLECTOR,
2	87696898	1	DEFLECTOR,

THRESHING	**BATTAGE**	**TRILLA**	**TÆRSKNING**
TREBBIATURA	**DRUSCH**	**DEBULHA**	**DORSEN**

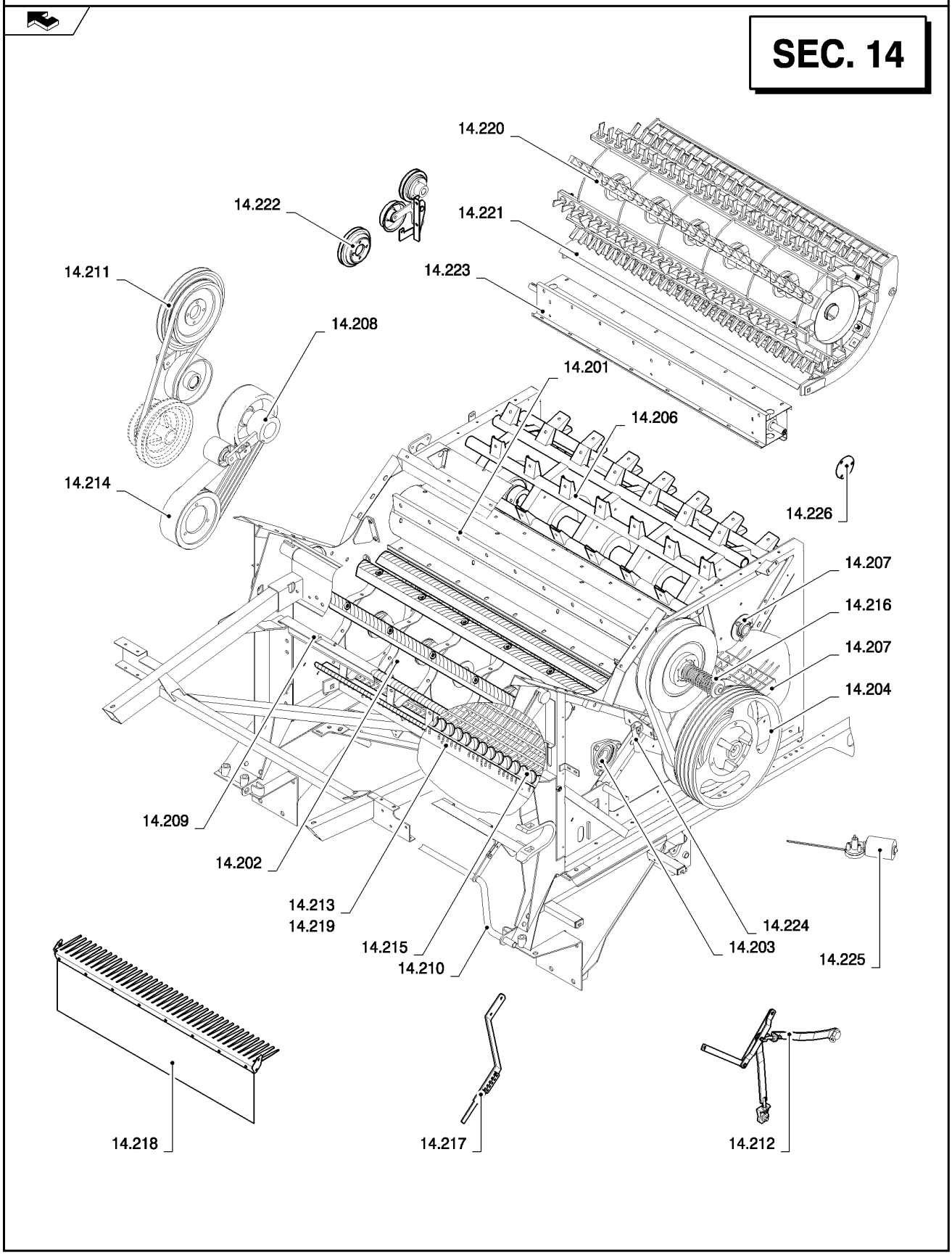

ссылка	Номер детали	Кол-во	Описание

14.201(A 01) BEATER

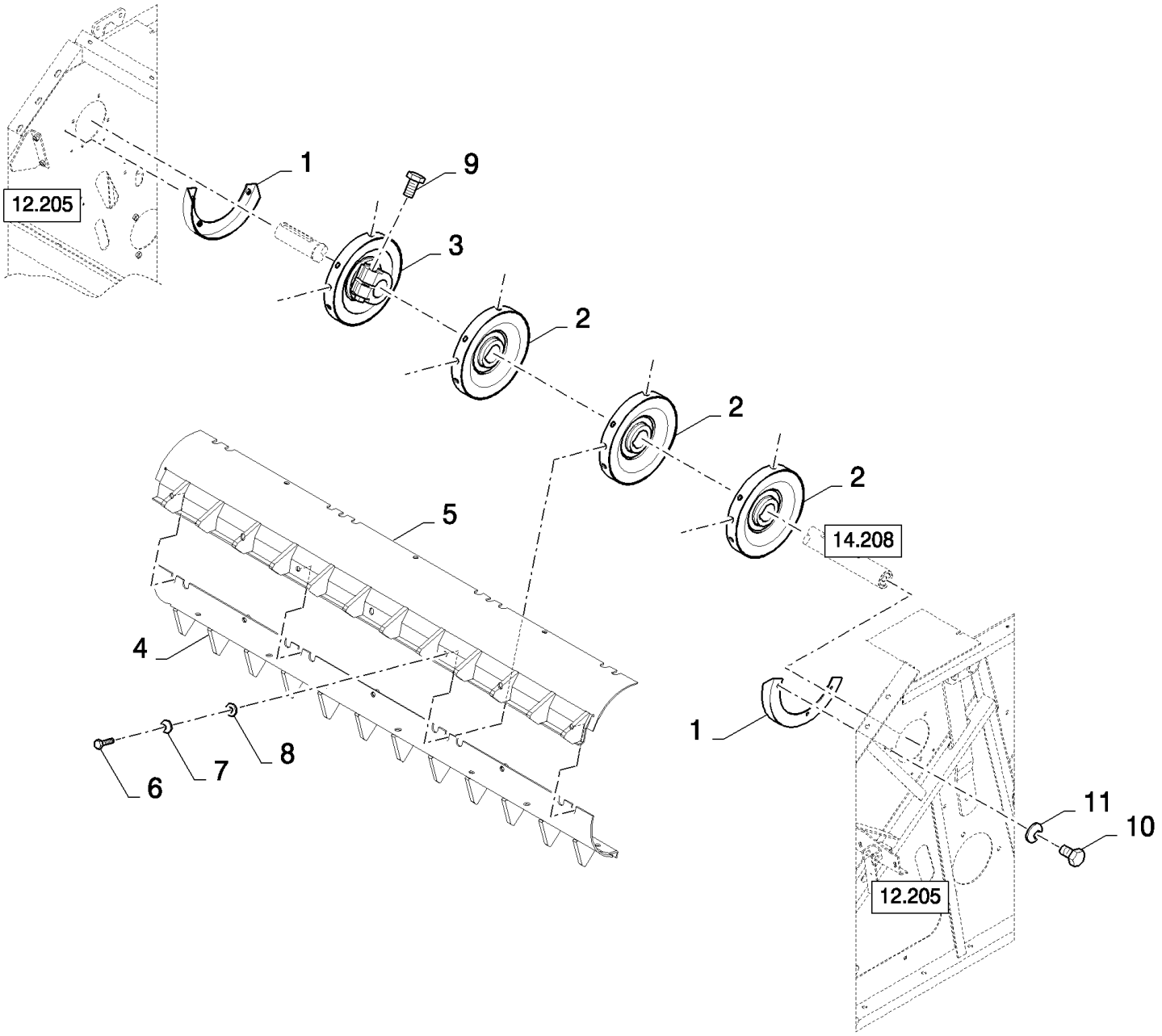

CSX7080 C659 - COMBINE (9/06-8/08)

14.201(A 01) BEATER

ссылка	Номер детали	Кол-во	Описание
1	84435912	2	HALF-RING,
2	84435802	3	DISC,
3	84435818	1	DISC,
4	84462627	2	LATH,
5	84462626	2	LATH,
6	9706687	28	SCREW, Hex, M12 x 30, 8.8,
7	140046	28	WASHER, Belleville, M12,
8	543043	28	WASHER,
9	350616	4	SCREW, Hex, M16 x 90, 8.8,
10	120100	6	BOLT, Hex, M6 x 20, 8.8,
11	322357	6	WASHER, SPRING, Belleville, M6,

14.201(C 01) BEATER, FIXED

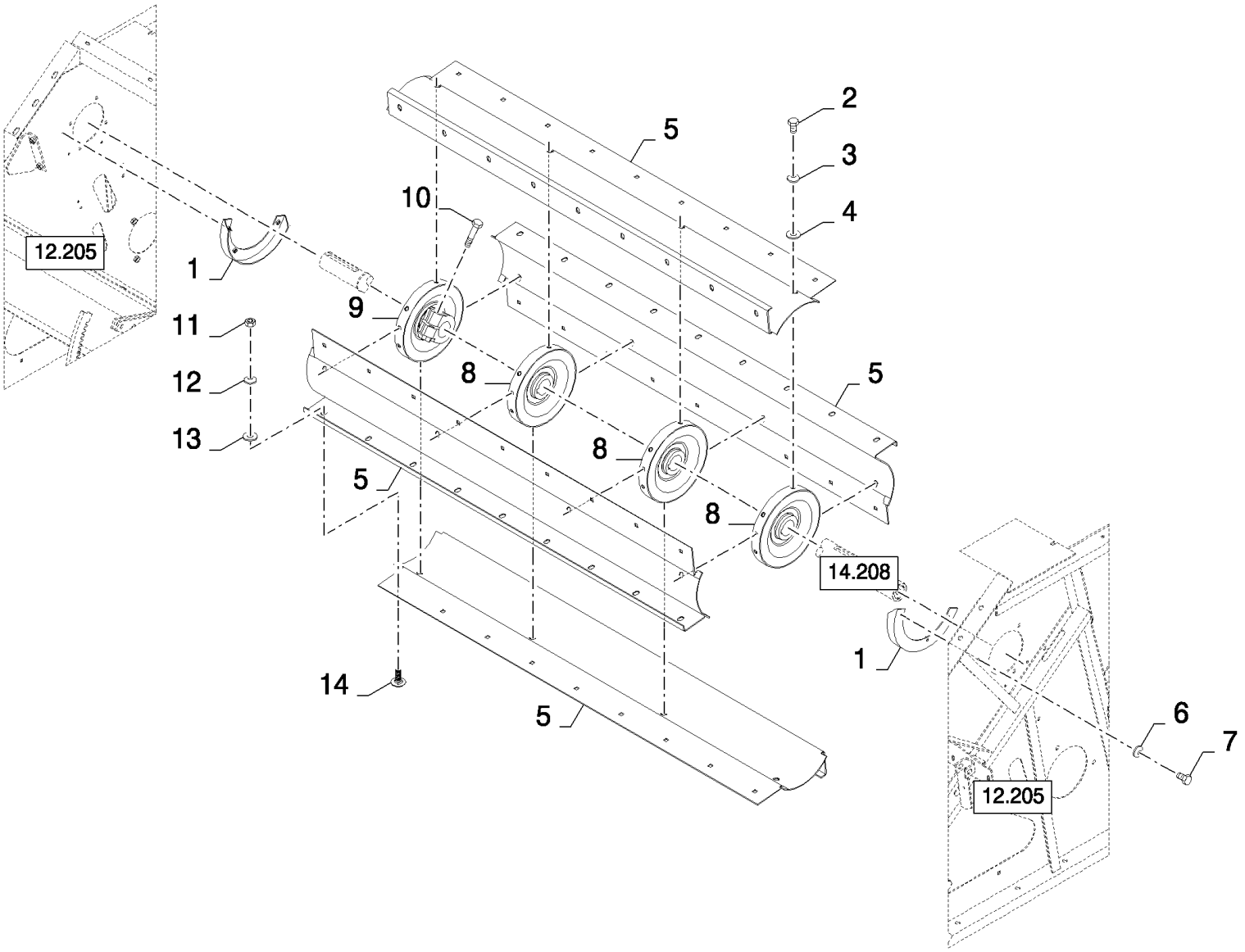

CSX7080 C659 - COMBINE (9/06-8/08)

14.201(C 01) BEATER, FIXED

ссылка	Номер детали	Кол-во	Описание
1	84435912	2	HALF-RING,
2	9706687	16	SCREW, Hex, M12 x 30, 8.8,
3	140046	16	WASHER, Belleville, M12,
4	543043	16	WASHER,
5	84442297	4	SHEET METAL, , BSN C607
5	87706145	4	PLATE, , ASN D608
6	322357	6	WASHER, SPRING, Belleville, M6,
7	120100	6	BOLT, Hex, M6 x 20, 8.8,
8	84435802	3	DISC,
9	84435818	1	DISC,
10	350616	4	SCREW, Hex, M16 x 90, 8.8,
11	100016	36	NUT, M10, Cl 8,
12	140045	36	WASHER, SPRING, Belleville, M10,
13	378244	36	WASHER, M10,
14	120041	36	BOLT, CARRIAGE, Short NK, M10 x 20, Cl8.8, Full Thd,

14.202(A 01) DRUM, STANDARD

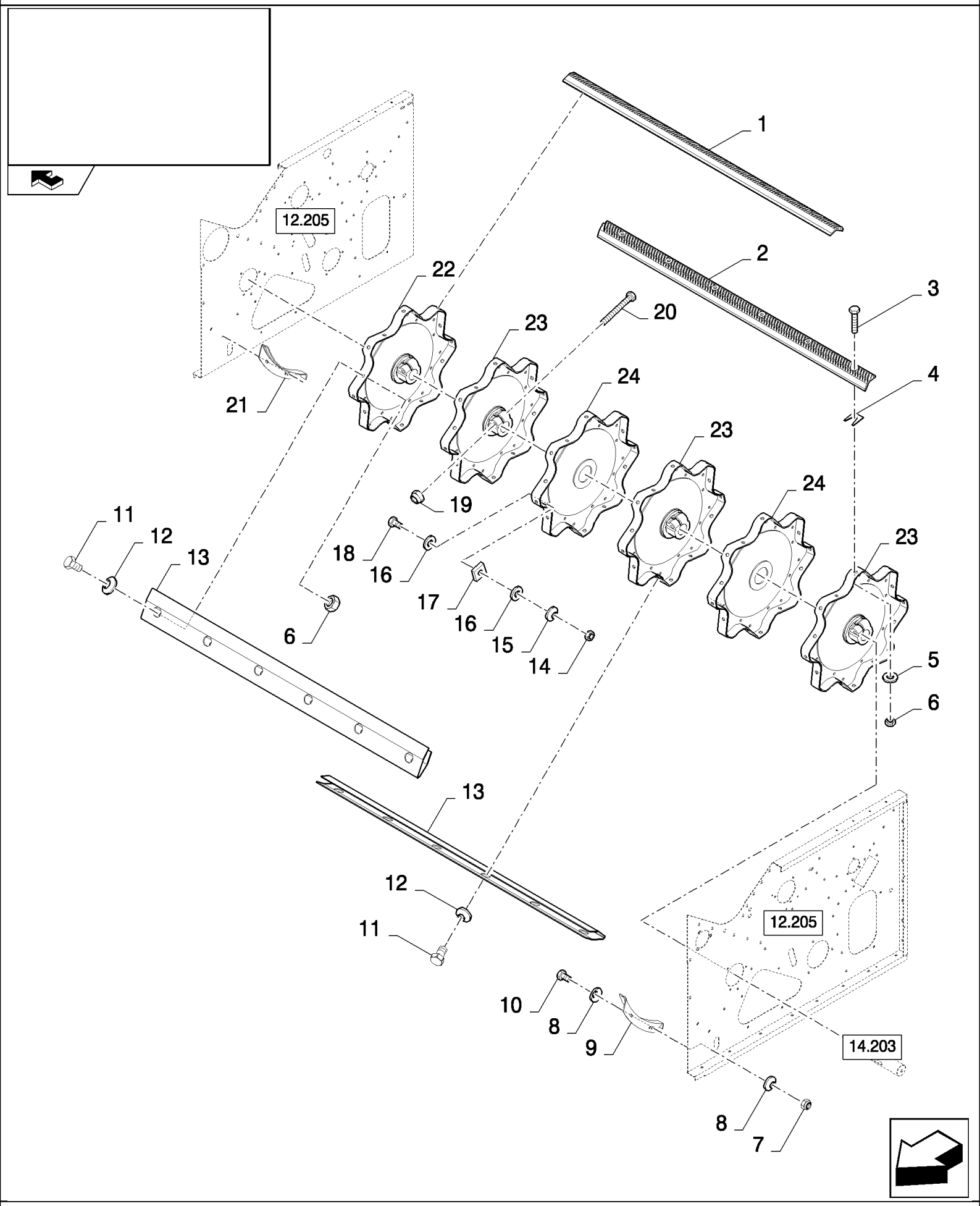

CSX7080 C659 - COMBINE (9/06-8/08)

14.202(A 01) DRUM, STANDARD

ссылка	Номер детали	Кол-во	Описание
1	84438637	2	RASP BAR SET, LH
2	84438638	2	RASP BAR SET, RH
3	385376	48	SCREW, M12x30
4	80481491	24	PLATE, ADJUSTING,
5	394630	48	WASHER,
6	9706685	84	NUT, M12, Cl 8,
7	353308	4	NUT, M6 x 1, Cl 8,
8	322357	8	WASHER, SPRING, Belleville, M6,
9	333222	1	ANGLE BAR,
10	120100	4	BOLT, Hex, M6 x 20, 8.8,
11	300388	48	SCREW, Hex, M12 x 25, 8.8,
12	140046	48	WASHER, Belleville, M12,
13	84440498	8	COVER,
14	9706690	6	NUT, M8, Cl 8,
15	322358	6	WASHER, SPRING, Belleville, M8,
16	140041	12	WASHER, M8 x 28 x 3,
17	351518	6	PLATE, ADJUSTING,
18	43128	6	BOLT, Hex, M8 x 30, 8.8,
19	86000441	4	NUT, M16 x 2, Cl 8,
20	350616	4	SCREW, Hex, M16 x 90, 8.8,
21	335307	1	ANGLE BAR,
22	84440736	1	DISC,
23	84440731	3	DISC,
24	394487	2	DISC,

14.203(A 01) STANDARD DRUM, SHAFT AND BEARINGS

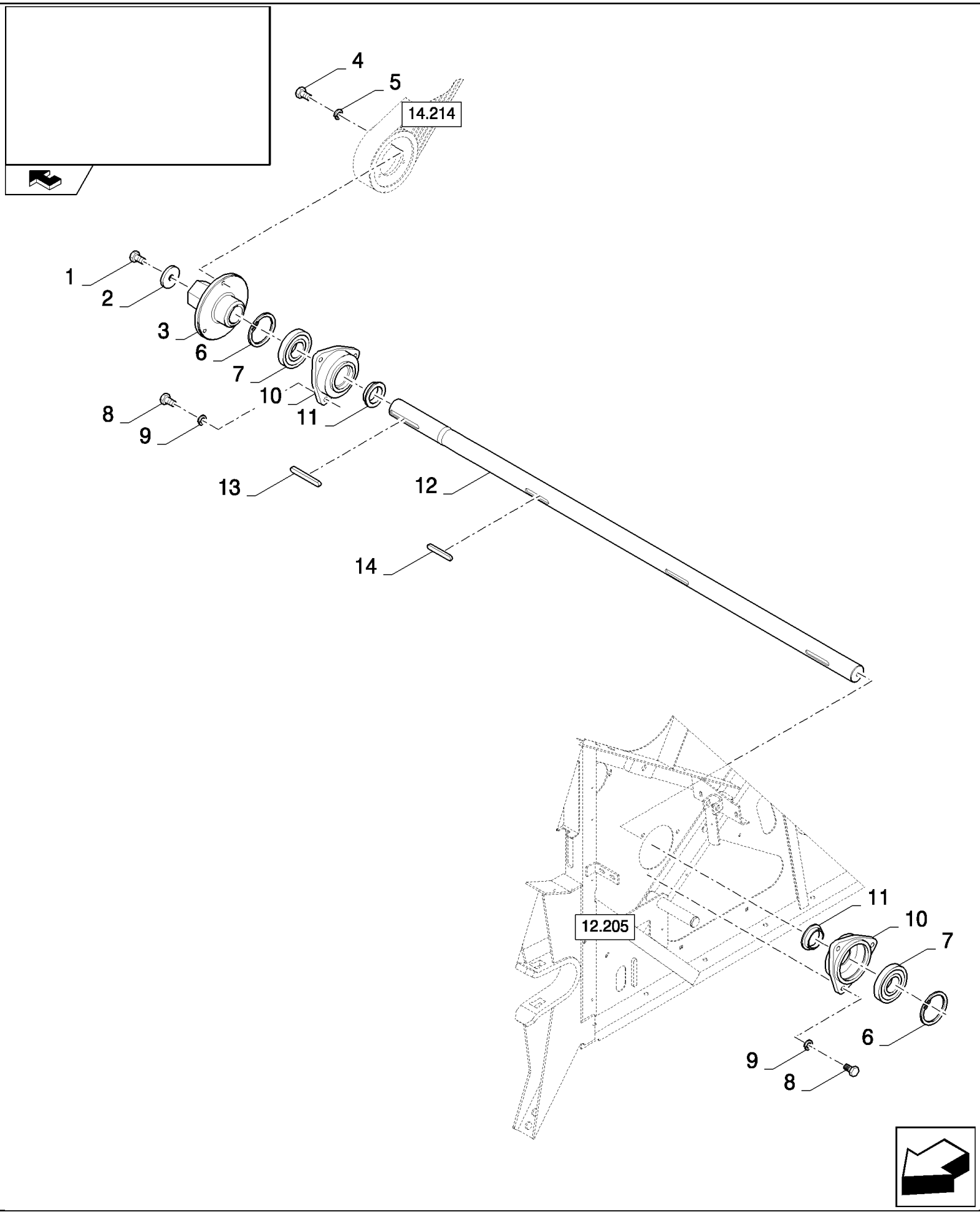

CSX7080 C659 - COMBINE (9/06-8/08)

14.203(A 01) STANDARD DRUM, SHAFT AND BEARINGS

ссылка	Номер детали	Кол-во	Описание
1	43167	1	BOLT, Hex, M16 x 30, 8.8, Full Thd,
2	84435349	1	WASHER,
3	84334140	1	HUB,
4	9706687	3	SCREW, Hex, M12 x 30, 8.8,
5	140046	3	WASHER, Belleville, M12,
6	301652	2	RING, SNAP, M110, Int,
7	388069	2	BEARING ASSY,
8	43140	6	BOLT, Hex, M10 x 30, 8.8, Full Thd,
9	140045	6	WASHER, SPRING, Belleville, M10,
10	84334105	2	HOUSING, BEARING,
11	388669	2	RING,
12	84071597	1	SHAFT,
13	365612	1	KEY,
14	306248	3	KEY,

14.204(01) DRUM VARIATOR

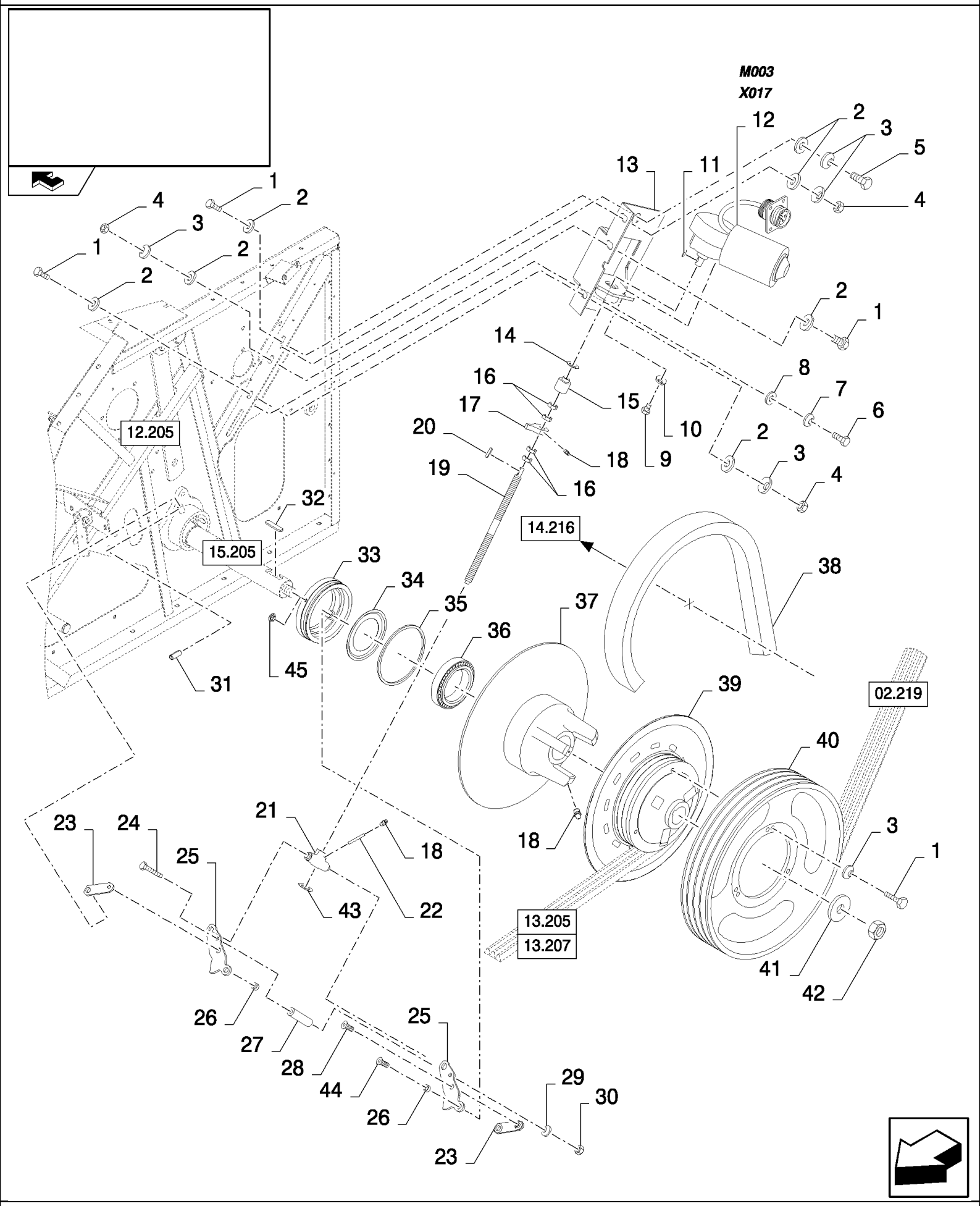

CSX7080 C659 - COMBINE (9/06-8/08)

14.204(01) DRUM VARIATOR

ссылка	Номер детали	Кол-во	Описание
1	9706687	9	SCREW, Hex, M12 x 30, 8.8,
2	378245	7	WASHER, M12,
3	140046	10	WASHER, Belleville, M12,
4	9706685	3	NUT, M12, Cl 8,
5	43151	1	SCREW, Hex, M12 x 20, 8.8, Full Thd,
6	120104	2	SCREW, Hex, M8 x 20, 8.8,
7	322358	2	WASHER, SPRING, Belleville, M8,
8	378243	2	WASHER, M8,
9	120100	3	BOLT, Hex, M6 x 20, 8.8,
10	322357	3	WASHER, SPRING, Belleville, M6,
11	84041731	1	KEY, WOODRUFF,
12	84041620	1	MOTOR, ELECTRIC, , SEE FIGURE 06.701
13	84334759	1	SUPPORT,
14	84073115	1	WASHER, THRUST, 24MM
15	84334748	1	BUSHING,
16	84073134	4	NUT,
17	84334754	1	BLOCK,
18	321204	4	NIPPLE, LUBE, M6 x 1, 16mm lg,
19	84072854	1	ROD, THREADED,
20	336126	1	KEY,
21	84069528	1	BLOCK, COUPLING, , BSN C551
21	87365354	1	HOUSING, BEARING, , ASN D552
22	89818440	1	TUBE,
23	84069522	2	LINKAGE,
24	331168	1	BOLT, Hex, M10 x 140, 8.8,
25	84334764	2	LEVER,
26	84072865	2	SLEEVE,
27	84334765	1	BUSHING,
28	393698	2	SCREW, Hex Soc Flat Hd, M10 x 25, 8.8, M10x25
29	140045	1	WASHER, SPRING, Belleville, M10,
30	100016	1	NUT, M10, Cl 8,
31	393871	2	PIN, LOCK, M5 x 30, Slotted,
32	323624	1	KEY,
33	84069518	1	HUB, , BSN C551
33	87547095	1	HOUSING, BEARING, , ASN D552
34	84072864	1	FLANGE,
35	84072819	1	SEAL,
36	84072818	1	BEARING ASSY,
37	84334396	1	PULLEY,
38	84035748	1	BELT, TRANSMISSION,
39	84334407	1	PULLEY, , BSN C551
39	87548151	1	PULLEY, , ASN D552
40	84334285	1	PULLEY,
41	84433644	1	WASHER,

CSX7080 C659 - COMBINE (9/06-8/08)

14.204(01) DRUM VARIATOR

ссылка	Номер детали	Кол-во	Описание
42	100034	2	NUT, M30 x 1.5, Cl 8,
43	84453625	1	SPACER, , BSN C551
44	84334564	2	SCREW, Hex Soc Flat Hd, M10 x 40, 12.9,
45	100037	2	NUT, M10 x 1.5, Cl 8, , ASN D552

14.206(A 01) ROTARY SEPARATOR AND WEAR PLATES

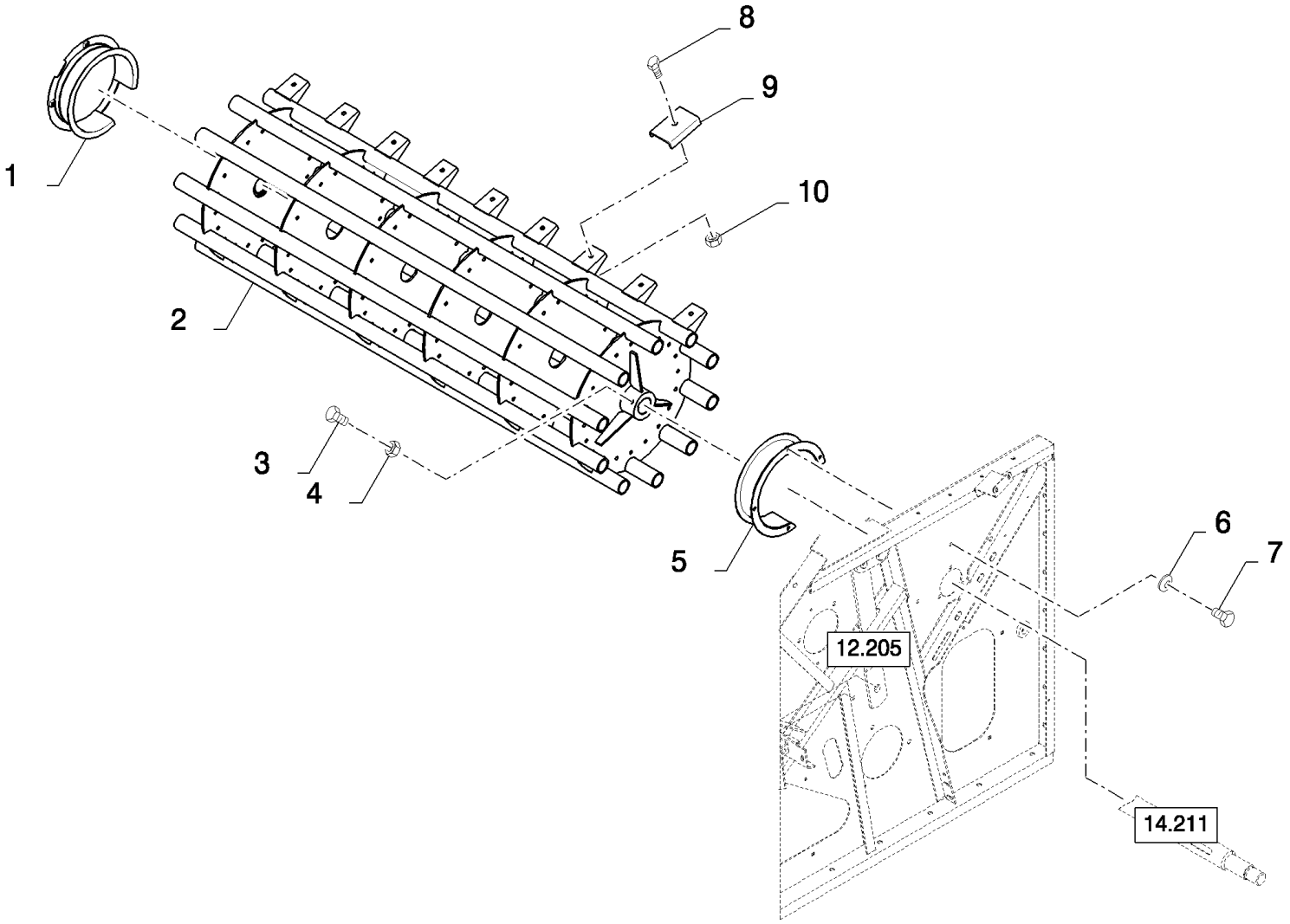

CSX7080 C659 - COMBINE (9/06-8/08)

14.206(A 01) ROTARY SEPARATOR AND WEAR PLATES

ссылка	Номер детали	Кол-во	Описание
1	9515746	1	PROTECTING COVER,
2	84435277	1	BEATER,
3	9706704	2	BOLT, Hex, M10 x 35, 8.8, Full Thd,
4	320648	2	NUT, M10, Cl 8, M10
5	84073709	1	PROTECTING COVER,
6	322358	7	WASHER, SPRING, Belleville, M8,
7	120104	7	SCREW, Hex, M8 x 20, 8.8,
8	120041	85	BOLT, CARRIAGE, Short NK, M10 x 20, Cl8.8, Full Thd,
9	9510423	85	PLATE, SKID,
10	100037	85	NUT, M10 x 1.5, Cl 8,

14.207(A 01) CONCAVE, ROTARY SEPARATOR

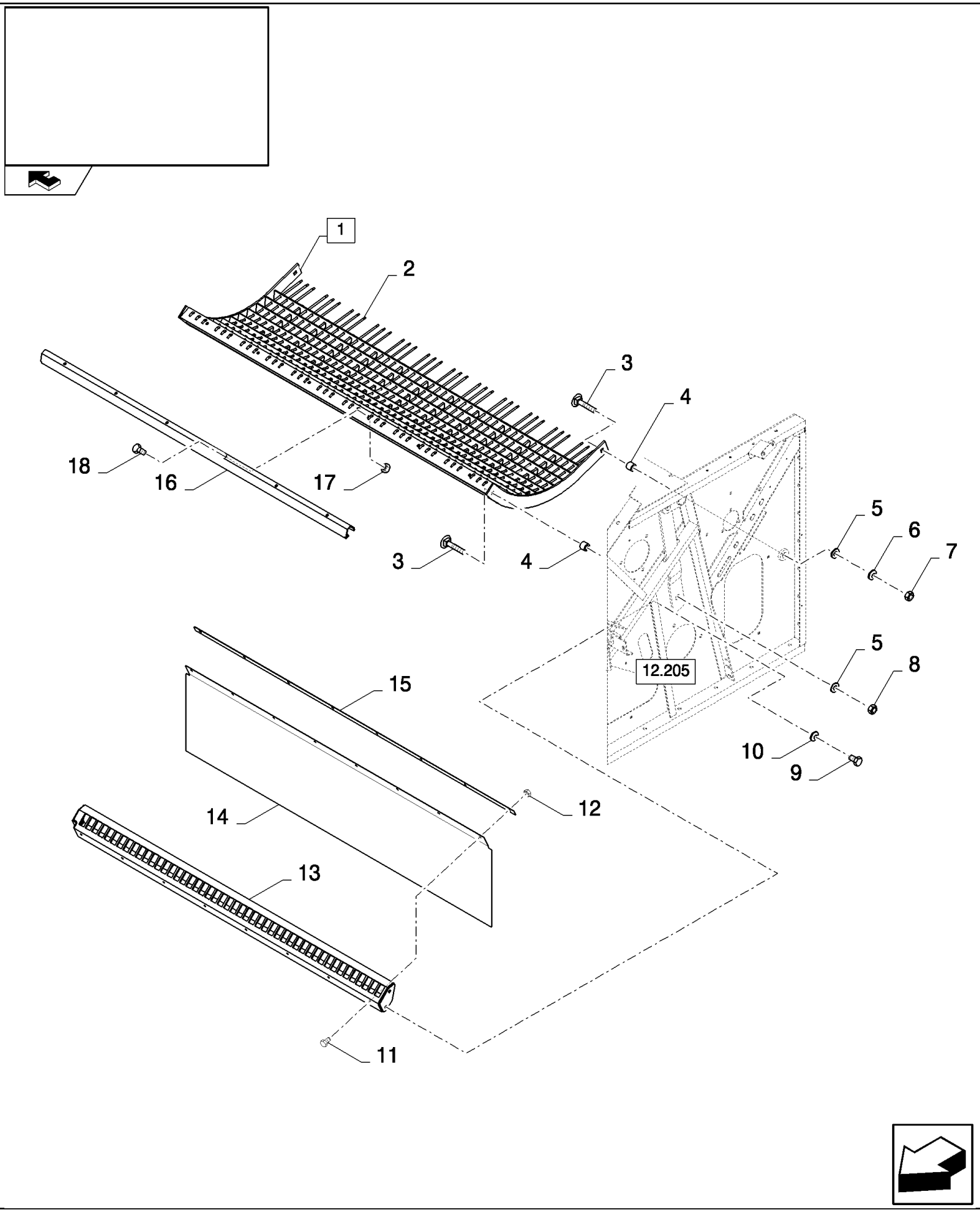

CSX7080 C659 - COMBINE (9/06-8/08)

14.207(A 01) CONCAVE, ROTARY SEPARATOR

ссылка	Номер детали	Кол-во	Описание
1	84431236	1	CONCAVE, (2)
2	84011227	36	WIRE,
3	328754	4	BOLT, CARRIAGE, Short NK, M12 x 40, Cl8.8, Full Thd,
4	84073698	4	BUSHING,
5	543043	4	WASHER, 13MM
6	140046	2	WASHER, Belleville, M12,
7	9706685	2	NUT, M12, Cl 8,
8	100038	2	NUT, M12 x 1.75, Cl 8,
9	43138	4	SCREW, Hex, M10 x 20, 8.8, Full Thd,
10	140045	4	WASHER, SPRING, Belleville, M10,
11	86508568	8	SCREW, Hex, M6 x 16, 8.8,
12	353308	8	NUT, M6 x 1, Cl 8,
13	84072239	1	GRILLE,
14	84073686	1	CANVAS,
15	84073695	1	PLATE, FIXING,
16	84073696	1	PROFILE,
17	86629542	6	NUT, LOCK, M8 x 1.25, Cl 8,
18	120061	6	BOLT, Hex, M8 x 60, 8.8,

14.208(A 01) BEATER SHAFT

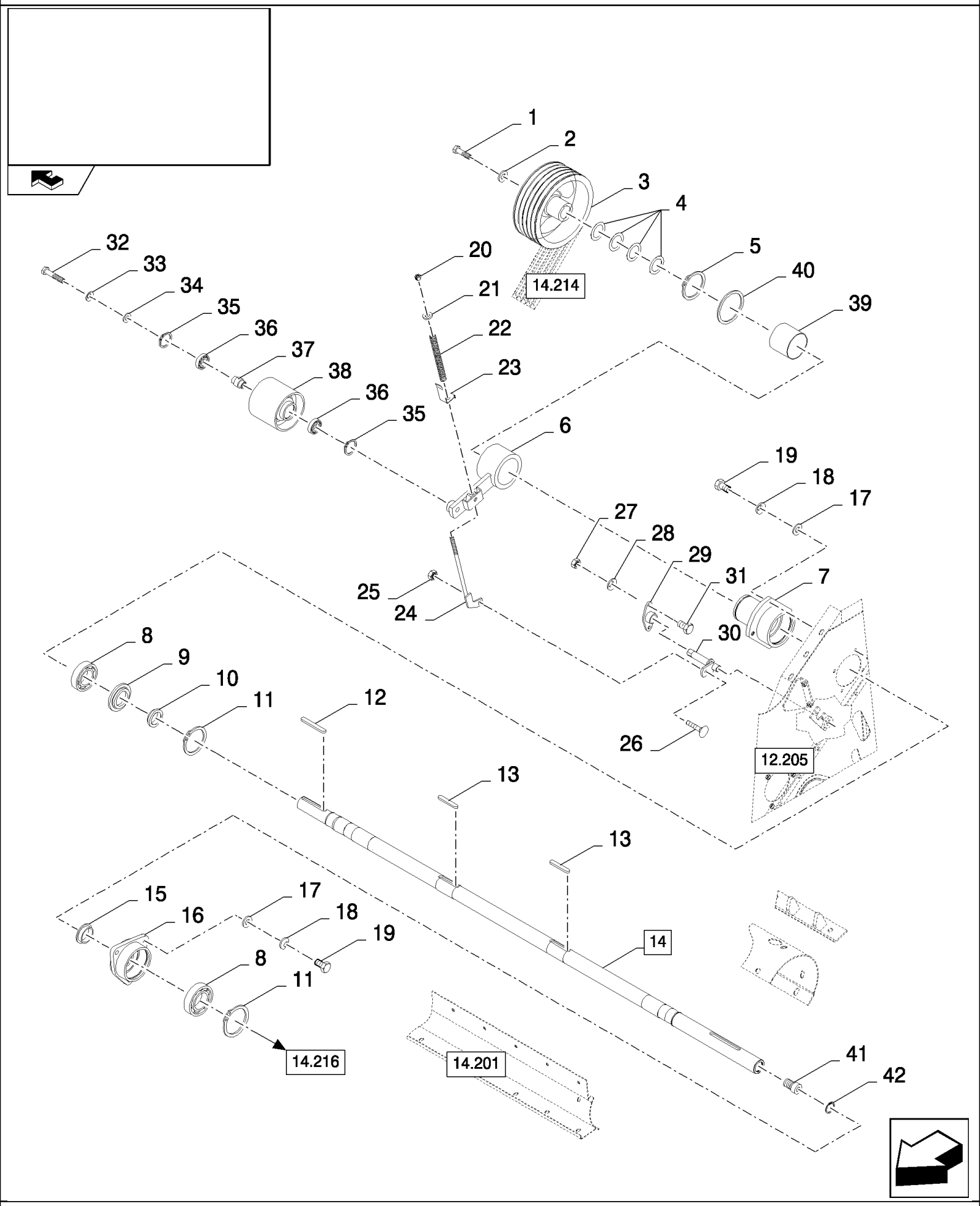

CSX7080 C659 - COMBINE (9/06-8/08)

14.208(A 01) BEATER SHAFT

ссылка	Номер детали	Кол-во	Описание
1	86508583	1	BOLT, Hex, M16 x 35, 8.8,
2	84435349	1	WASHER,
3	84334166	1	PULLEY,
4	84072616	4	RING,
5	300639	1	RING, SNAP, M90, Ext,
6	84444199	1	LEVER,
7	84072250	1	HOUSING, BEARING,
8	388069	2	BEARING ASSY,
9	388937	1	RING,
10	84032287	1	RING,
11	301652	2	RING, SNAP, M110, Int,
12	84072875	1	KEY,
13	434640	2	KEY,
14	84432471	1	SHAFT, (41,42)
15	388669	1	RING,
16	439605	1	HOUSING, BEARING,
17	378244	7	WASHER, M10,
18	140045	7	WASHER, SPRING, Belleville, M10,
19	9706704	7	BOLT, Hex, M10 x 35, 8.8, Full Thd,
20	412126	1	NUT, LOCK, M12 x 1.75, Cl 8,
21	378245	1	WASHER, M12,
22	84814910	1	SPRING,
23	84077288	1	INDICATOR,
24	84077226	1	TIE-ROD,
25	100037	1	NUT, M10 x 1.5, Cl 8,
26	338949	1	BOLT, CARRIAGE, Short NK, M10 x 25, Cl8.8, Full Thd,
27	9706690	2	NUT, M8, Cl 8,
28	322358	2	WASHER, SPRING, Belleville, M8,
29	338712	1	FLANGE,
30	84077232	1	SHAFT,
31	120104	2	SCREW, Hex, M8 x 20, 8.8,
32	43874	1	SCREW, Hex, M16 x 110, 8.8,
33	140048	1	WASHER, SPRING, Belleville, M16,
34	378246	1	WASHER, 16MM
35	370011	2	RING, SNAP, M52, Int,
36	443898	2	BEARING, BALL,
37	9819056	1	BUSHING,
38	84437587	1	WHEEL, IDLER,
39	84444179	1	SLEEVE,
40	442413	1	SPACER,
41	84072845	1	BUSHING,
42	300642	1	RING, SNAP, M35, Int,

14.209(A 01) SPRING LOADED DUSTPLATE

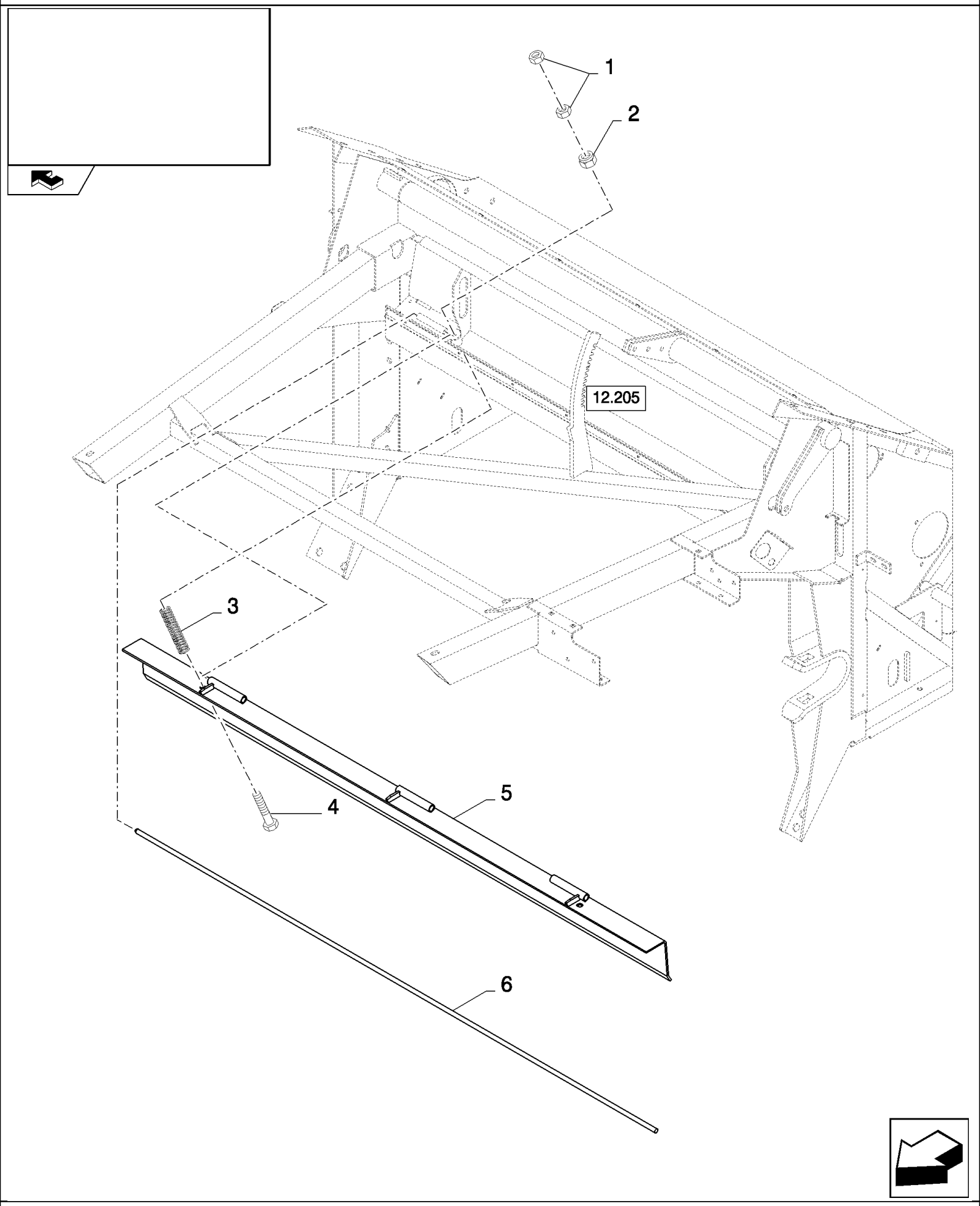

CSX7080 C659 - COMBINE (9/06-8/08)

14.209(A 01) SPRING LOADED DUSTPLATE

ссылка	Номер детали	Кол-во	Описание
1	100016	4	NUT, M10, Cl 8,
2	412141	2	NUT, LOCK, M10 x 1.5, Cl 8,
3	180069	2	SPRING,
4	120117	2	BOLT, Hex, M10 x 110, 8.8, Full Thd,
5	84075232	1	COVER,
6	390376	1	ROD,

14.210(A 01) STONE TRAP AND COVER PLATE

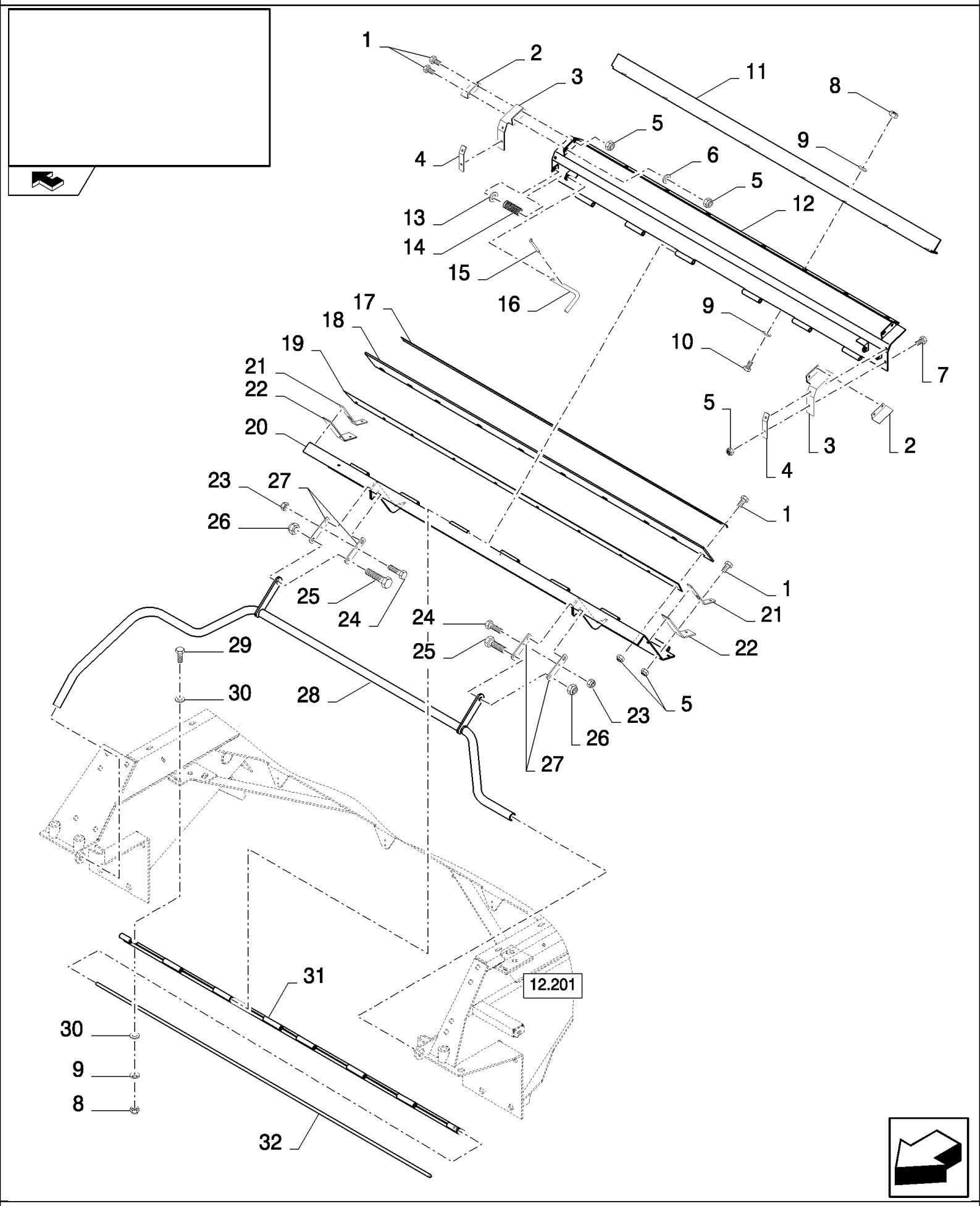

CSX7080 C659 - COMBINE (9/06-8/08)

14.210(A 01) STONE TRAP AND COVER PLATE

ссылка	Номер детали	Кол-во	Описание
1	120100	20	BOLT, Hex, M6 x 20, 8.8,
2	84072895	2	BRACKET,
3	84071726	2	CANVAS,
4	84072893	2	BRACKET,
5	353308	24	NUT, M6 x 1, Cl 8,
6	9824259	2	WASHER, M6 x 12 x 1.6,
7	86508568	4	SCREW, Hex, M6 x 16, 8.8,
8	9706690	14	NUT, M8, Cl 8,
9	322358	24	WASHER, SPRING, Belleville, M8,
10	120104	10	SCREW, Hex, M8 x 20, 8.8,
11	84072889	1	PLATE, COVER,
12	84071741	1	PLATE, COVER,
13	86588502	2	WASHER, M12 x 25 x 3, 12MM
14	84814911	2	SPRING,
15	130005	2	PIN, SPLIT (COTTER), M3.2 x 32,
16	84072894	2	HANDLE,
17	84000704	1	STRIP,
18	9831017	1	CANVAS,
19	9813936	1	CANVAS,
20	84072886	1	COVER,
21	84072891	2	BRACKET,
22	84071813	2	CANVAS,
23	86629542	2	NUT, LOCK, M8 x 1.25, Cl 8,
24	43127	2	BOLT, Hex, M8 x 25, 8.8,
25	9706687	4	SCREW, Hex, M12 x 30, 8.8,
26	100038	4	NUT, M12 x 1.75, Cl 8,
27	84072935	4	BRACKET,
28	84072951	1	LEVER,
29	43128	4	BOLT, Hex, M8 x 30, 8.8,
30	140041	8	WASHER, M8 x 28 x 3,
31	84072892	1	HINGE,
32	390376	1	ROD,

14.210(C 01) STONE TRAP AND COVER PLATE - FOR LATERALE ONLY

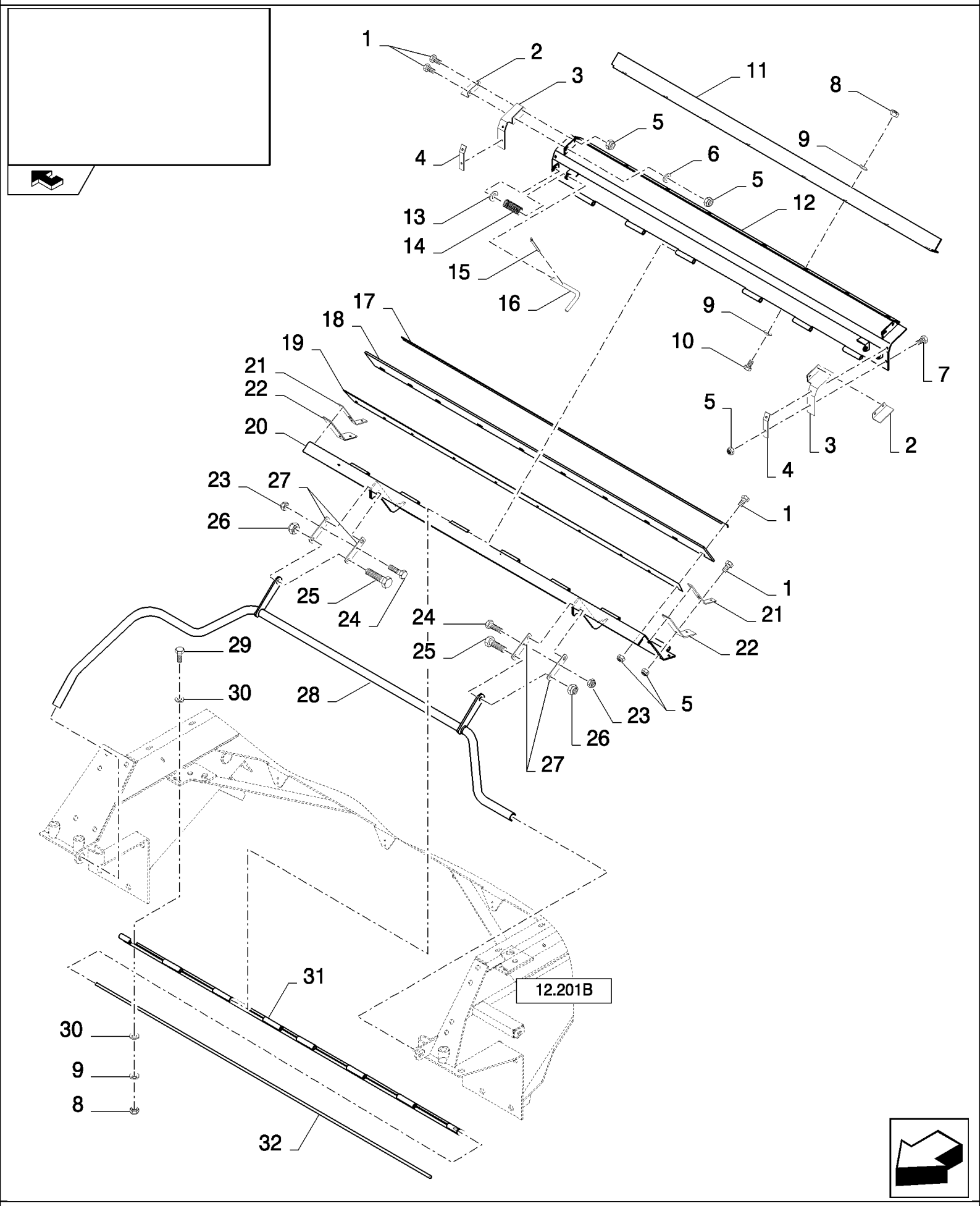

CSX7080 C659 - COMBINE (9/06-8/08)

14.210(C 01) STONE TRAP AND COVER PLATE - FOR LATERALE ONLY

ссылка	Номер детали	Кол-во	Описание
1	120100	AR	BOLT, Hex, M6 x 20, 8.8,
2	84072895	2	BRACKET,
3	84071726	2	CANVAS,
4	84072893	2	BRACKET,
5	353308	AR	NUT, M6 x 1, Cl 8,
6	9824259	2	WASHER, M6 x 12 x 1.6,
7	86508568	4	SCREW, Hex, M6 x 16, 8.8,
8	9706690	AR	NUT, M8, Cl 8,
9	322358	AR	WASHER, SPRING, Belleville, M8,
10	120104	AR	SCREW, Hex, M8 x 20, 8.8,
11	84072889	1	PLATE, COVER,
12	84071741	1	PLATE, COVER,
13	86588502	2	WASHER, M12 x 25 x 3,
14	84814911	2	SPRING,
15	130005	2	PIN, SPLIT (COTTER), M3.2 x 32,
16	84072894	2	HANDLE,
17	84000704	1	STRIP,
18	9831017	1	CANVAS,
19	9813936	1	CANVAS,
20	87590529	1	DOOR,
21	87590535	2	PLATE, FIXING,
22	87590534	2	CANVAS,
23	86629542	2	NUT, LOCK, M8 x 1.25, Cl 8,
24	43127	2	BOLT, Hex, M8 x 25, 8.8,
25	9706687	4	SCREW, Hex, M12 x 30, 8.8,
26	100038	4	NUT, M12 x 1.75, Cl 8,
27	84072935	4	BRACKET,
28	87544043	1	TUBE,
29	43128	4	BOLT, Hex, M8 x 30, 8.8,
30	140041	8	WASHER, M8 x 28 x 3,
31	84072892	1	HINGE,
32	390376	1	ROD,

14.211(A 01) ROTARY SEPARATOR DRIVE AND SHAFT

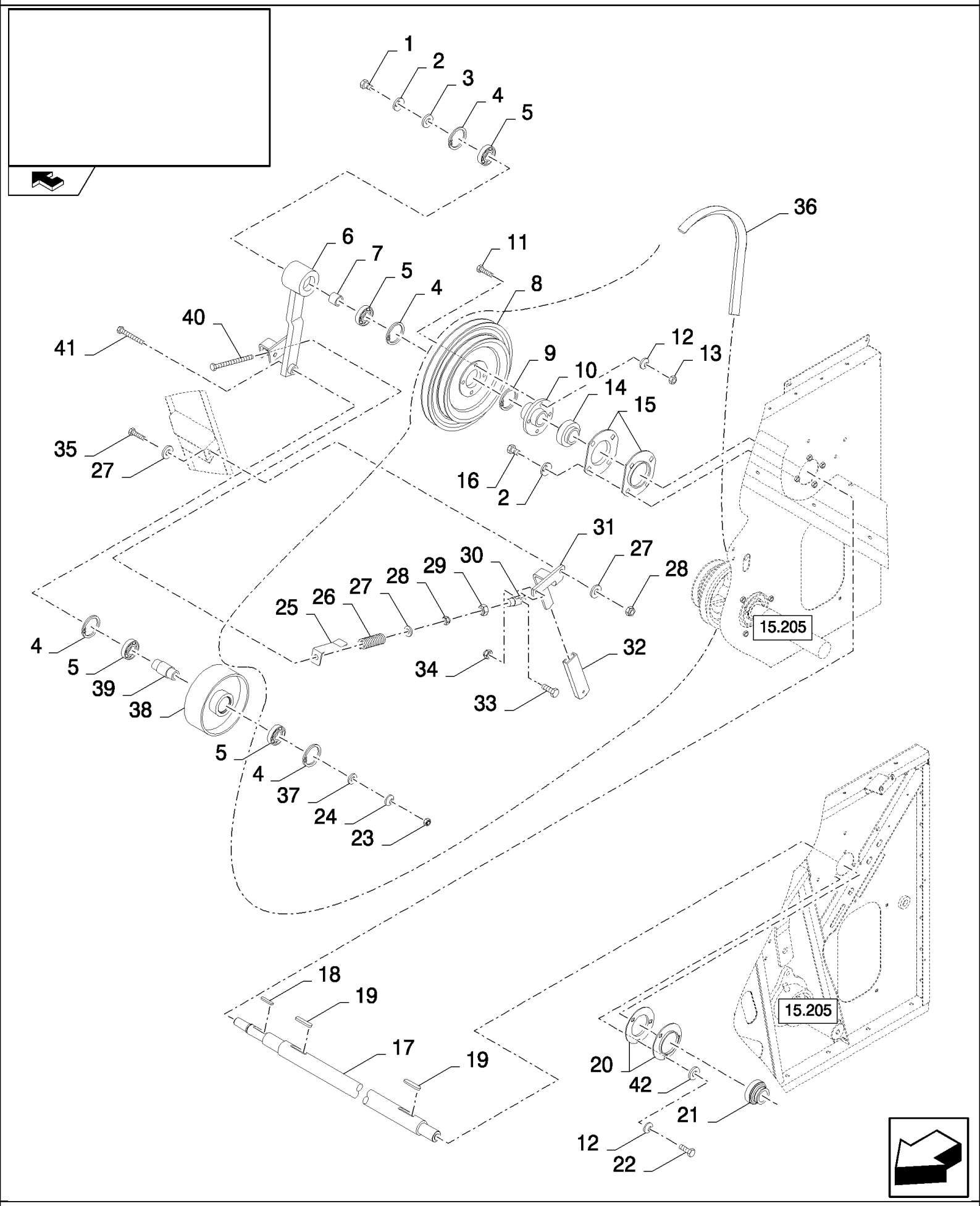

CSX7080 C659 - COMBINE (9/06-8/08)

14.211(A 01) ROTARY SEPARATOR DRIVE AND SHAFT

ссылка	Номер детали	Кол-во	Описание
1	9706687	1	SCREW, Hex, M12 x 30, 8.8,
2	140046	5	WASHER, Belleville, M12,
3	9839232	1	WASHER, 13MM
4	370011	4	RING, SNAP, M52, Int,
5	443898	4	BEARING, BALL,
6	87381774	1	ARM,
7	430235	1	SPACER,
8	84814020	1	PULLEY,
9	370004	1	RING, SNAP, M35, Ext,
10	84334177	1	FLANGE,
11	412151	4	BOLT, Hex, M10 x 55, 8.8, M12x55
12	140045	AR	WASHER, SPRING, Belleville, M10,
13	100016	4	NUT, M10, Cl 8,
14	455805	1	BEARING, BALL,
15	9837215	2	FLANGE,
16	300388	4	SCREW, Hex, M12 x 25, 8.8,
17	84075051	1	SHAFT,
18	170012	1	KEY,
19	323624	2	KEY,
20	36403	2	FLANGE,
21	84814912	1	BEARING, BALL,
22	43139	3	SCREW, Hex, M10 x 25, 8.8, Full Thd, M10x25
23	100020	1	NUT, M16, Cl 8,
24	140048	1	WASHER, SPRING, Belleville, M16,
25	84438562	1	INDICATOR, , BSN C627
25	87744447	1	INDICATOR, , ASN D628
26	322297	1	SPRING,
27	378245	AR	WASHER, M12,
28	412126	AR	NUT, LOCK, M12 x 1.75, Cl 8,
29	9706685	1	NUT, M12, Cl 8,
30	9602976	1	YOKE,
31	84076898	1	LEVER,
32	84439164	1	HANDLE GRIP,
33	9706704	1	BOLT, Hex, M10 x 35, 8.8, Full Thd,
34	100037	1	NUT, M10 x 1.5, Cl 8,
35	86629541	1	BOLT, Hex, M12 x 40, 8.8, Full Thd,
36	84073933	1	BELT, TRANSMISSION,
37	378246	1	WASHER, 16MM
38	84814021	1	WHEEL, IDLER,
39	9513986	1	BUSHING,
40	84074911	1	BOLT, Hex, M12 x 200, 12.9, M12x200
41	321246	1	BOLT, Hex, M16 x 120, 8.8,
42	378244	3	WASHER, M10,

14.213(B 01) CONCAVE, DRUM - WITH ROTARY SEPARATOR

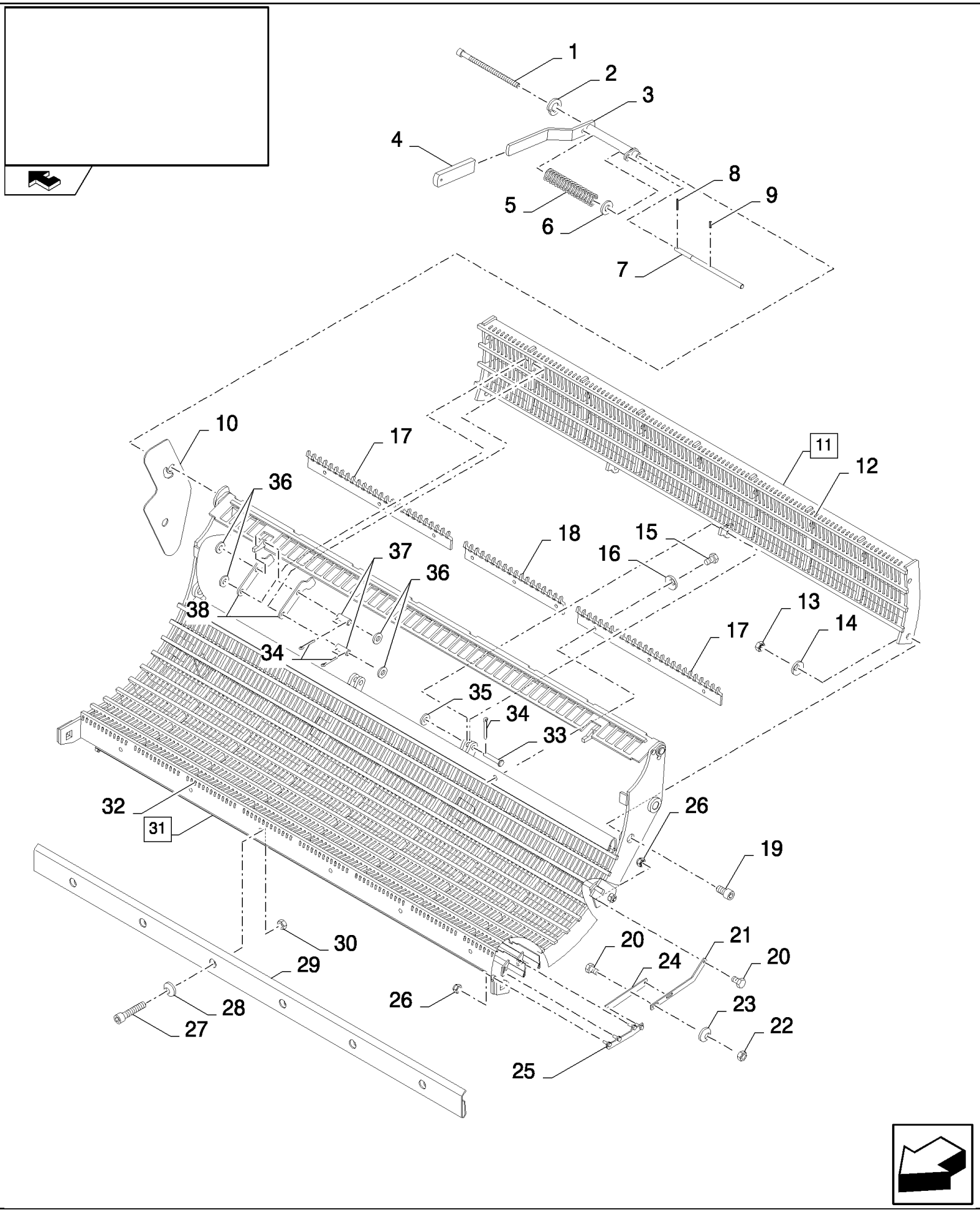

CSX7080 C659 - COMBINE (9/06-8/08)

14.213(B 01) CONCAVE, DRUM - WITH ROTARY SEPARATOR

ссылка	Номер детали	Кол-во	Описание
1	84077695	1	SCREW, M12x200
2	412123	1	WASHER, M12,
3	84072041	1	LEVER,
4	84439164	1	HANDLE GRIP,
5	321215	1	SPRING,
6	84439368	1	WASHER, 12.5MM
7	84072023	1	SHAFT,
8	9823343	1	PIN, LOCK, M5 x 65, Slotted,
9	300865	1	PIN, LOCK, M3 x 20, Slotted,
10	84431177	1	PLATE,
11	84071997	1	CONCAVE, (12)
12	84071701	96	WIRE, RETAINING,
13	100020	2	NUT, M16, Cl 8,
14	140048	2	WASHER, SPRING, Belleville, M16,
15	120104	9	SCREW, Hex, M8 x 20, 8.8,
16	322358	9	WASHER, SPRING, Belleville, M8,
17	84432976	2	RAKE,
18	84431562	1	RAKE,
19	84077750	2	SCREW, M16x30
20	120100	6	BOLT, Hex, M6 x 20, 8.8,
21	84443709	2	LEVER,
22	9706755	4	NUT, M6, Cl 8,
23	322357	4	WASHER, SPRING, Belleville, M6,
24	84443708	2	LEVER,
25	84443710	2	LEVER,
26	353308	10	NUT, M6 x 1, Cl 8,
27	120052	6	SCREW, Hex Soc Hd, M10 x 25, 8.8,
28	140045	6	WASHER, SPRING, Belleville, M10,
29	84072086	1	SHEET, FRONT,
30	100016	6	NUT, M10, Cl 8,
31	84072139	1	CONCAVE, (32)
32	84071705	100	WIRE, RETAINING,
33	321018	2	PIN, CLEVIS, M12 x 40,
34	130003	10	PIN, SPLIT (COTTER), M3.2 x 20,
35	86511324	2	WASHER, M12 x 24 x 2.5,
36	378245	8	WASHER, M12,
37	80324907	4	PIN, ROLL,
38	84446253	4	LEVER,

14.214(01) DRUM DRIVE

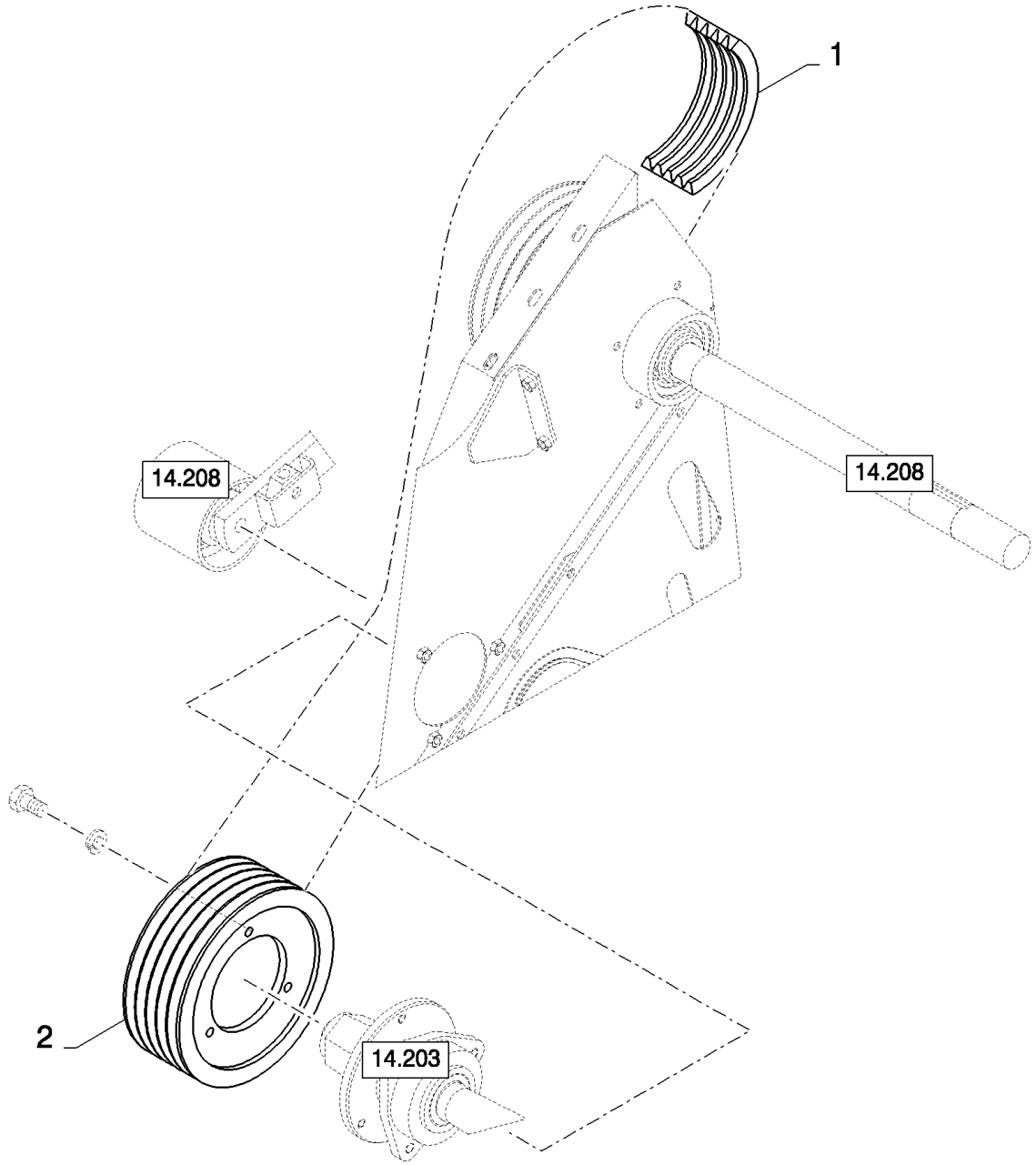

CSX7080 C659 - COMBINE (9/06-8/08)

14.214(01) DRUM DRIVE

ссылка	Номер детали	Кол-во	Описание
1	84072772	1	BELT, TRANSMISSION,
1	84072815	1	BELT, TRANSMISSION, , LOW DRUM SPEED
2	84334104	1	PULLEY,
2	84334120	1	PULLEY, , LOW DRUM SPEED

14.215(A 01) DE-AWNING SLATS

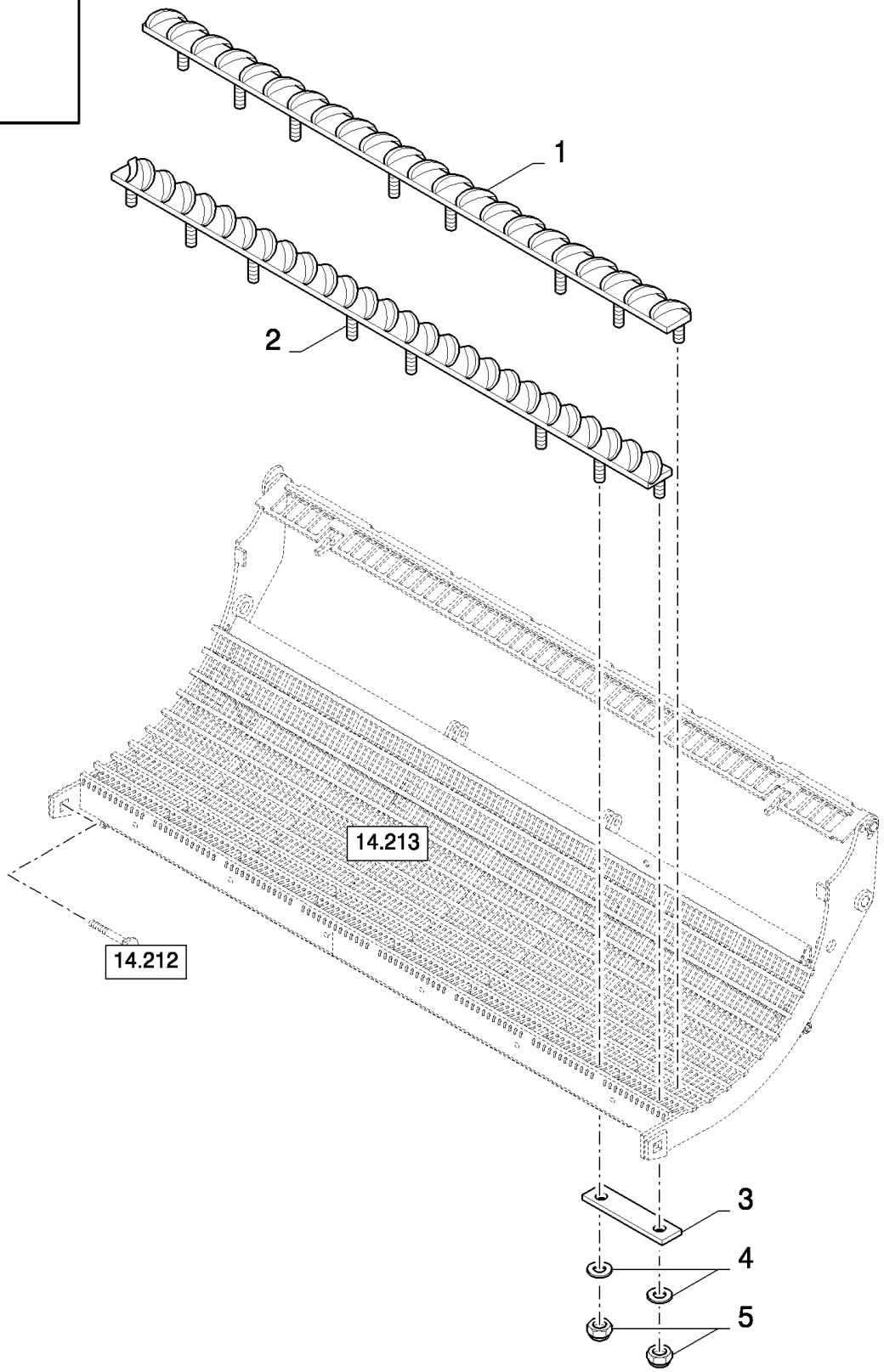

CSX7080 C659 - COMBINE (9/06-8/08)

14.215(A 01) DE-AWNING SLATS

ссылка	Номер детали	Кол-во	Описание
1	84814227	1	DE AWNER,
2	84814223	1	DE AWNER,
3	9832998	6	PLATE, FIXING,
4	140041	16	WASHER, M8 x 28 x 3,
5	412250	16	NUT, LOCK, M8 x 1.25, Cl 8,

14.216(01) DRUM VARIATOR

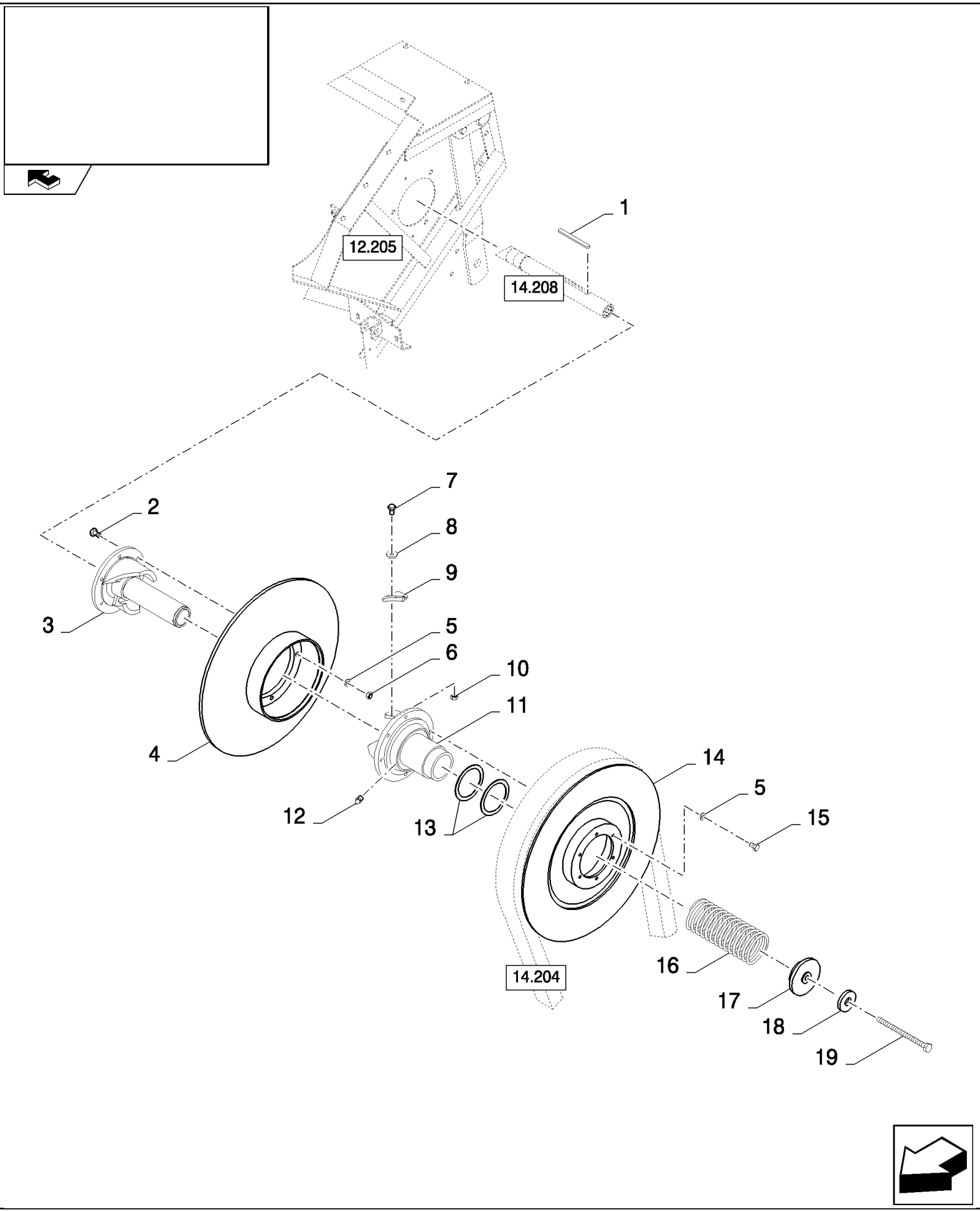

CSX7080 C659 - COMBINE (9/06-8/08)

14.216(01) DRUM VARIATOR

ссылка	Номер детали	Кол-во	Описание
1	444889	1	KEY,
2	120068	6	BOLT, Hex, M10 x 40, 8.8, Full Thd,
3	84072287	1	HUB,
4	84334199	1	DISC,
5	140045	12	WASHER, SPRING, Belleville, M10,
6	86588450	6	WASHER, M6,
7	43117	6	BOLT, Hex, M6 x 30, 8.8,
8	86588450	6	WASHER, M6,
9	84072684	2	CAM,
10	353308	6	NUT, M6 x 1, Cl 8,
11	84334439	1	HUB,
12	84814929	1	NIPPLE, LUBE,
13	84072991	2	RING,
14	84334197	1	DISC,
15	43140	6	BOLT, Hex, M10 x 30, 8.8, Full Thd,
16	84431523	1	SPRING,
17	84334193	1	RING, PRESSURE,
18	84058945	1	WASHER,
19	84072773	1	BOLT, Hex, M16 x 240, 8.8, Full Thd, M16x240

14.217(01) ROTARY SEPARATOR CONCAVE ADJUSTMENT

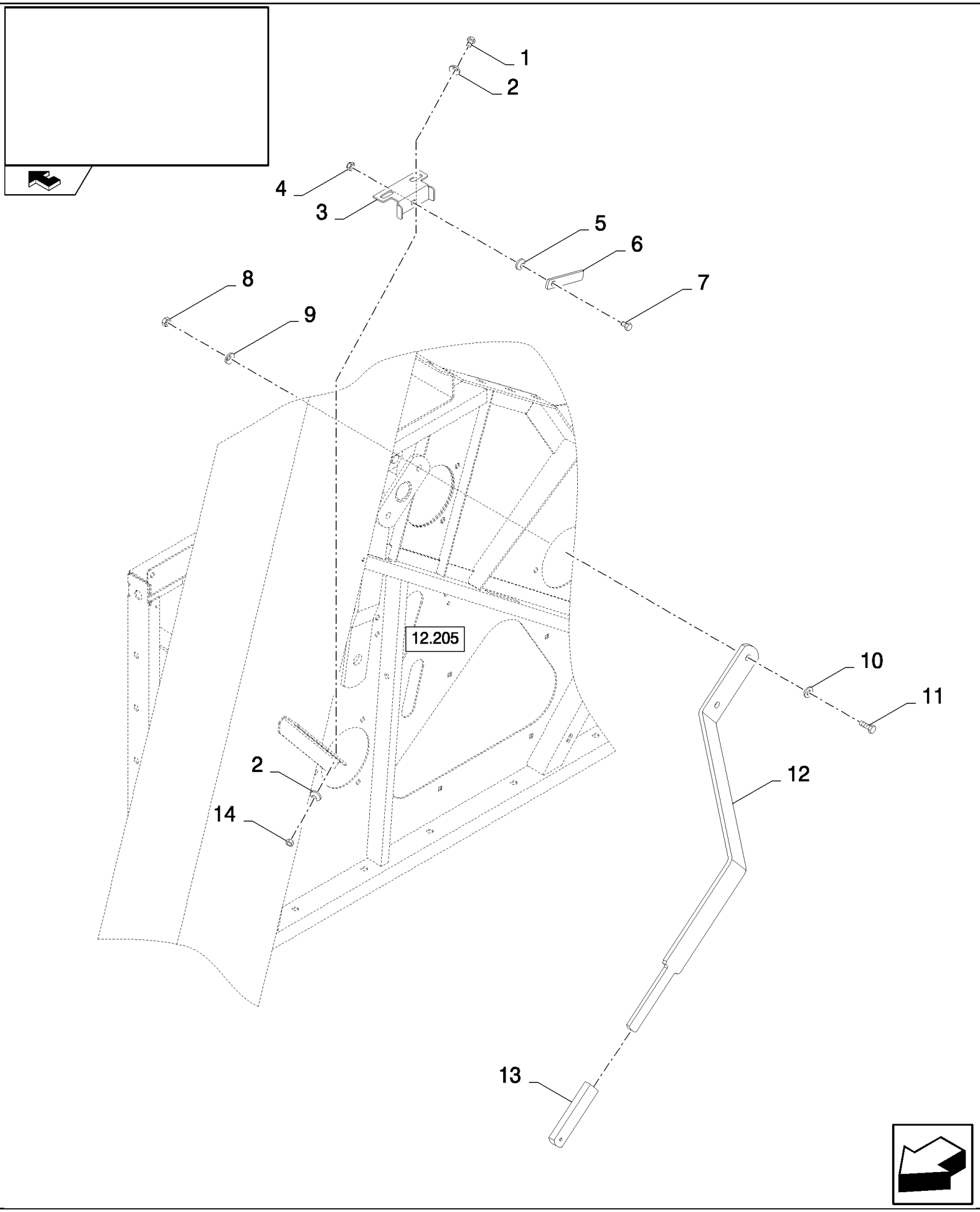

CSX7080 C659 - COMBINE (9/06-8/08)

14.217(01) ROTARY SEPARATOR CONCAVE ADJUSTMENT

ссылка	Номер детали	Кол-во	Описание
1	43138	2	SCREW, Hex, M10 x 20, 8.8, Full Thd,
2	140045	4	WASHER, SPRING, Belleville, M10,
3	84017313	1	SUPPORT,
4	100037	1	NUT, M10 x 1.5, Cl 8,
5	80300368	1	WASHER,
6	84017312	1	PLATE, COVER,
7	43139	1	SCREW, Hex, M10 x 25, 8.8, Full Thd, M10x25
8	9706685	2	NUT, M12, Cl 8,
9	140046	2	WASHER, Belleville, M12,
10	140018	2	WASHER, M12 x 24 x 2.5,
11	86629541	2	BOLT, Hex, M12 x 40, 8.8, Full Thd,
12	84453729	1	LEVER,
13	84439164	1	HANDLE GRIP,
14	100016	2	NUT, M10, Cl 8,

14.218(A 01) RAKE UNDER BEATER - FOR LATERALE ONLY

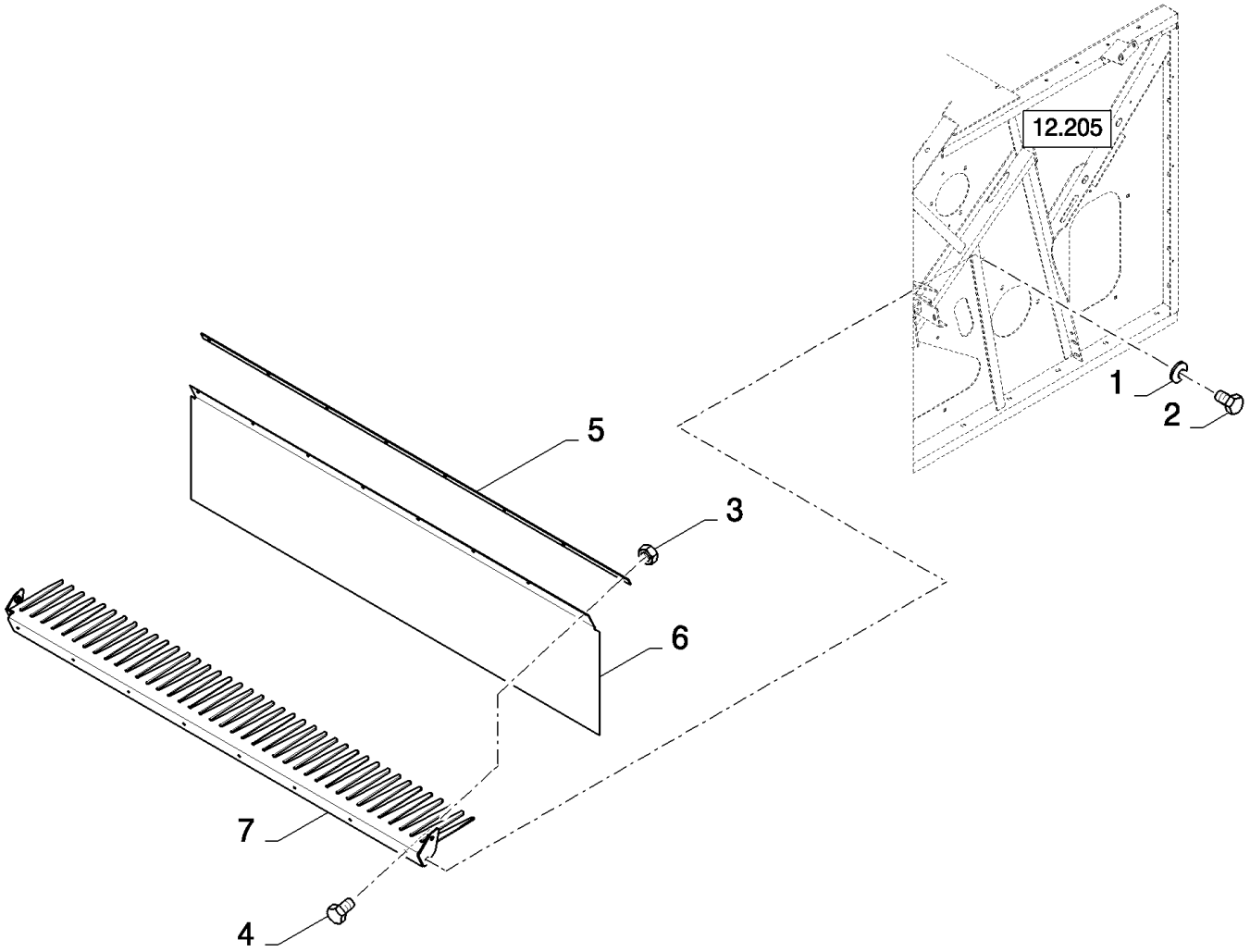

CSX7080 C659 - COMBINE (9/06-8/08)

14.218(A 01) RAKE UNDER BEATER - FOR LATERALE ONLY

ссылка	Номер детали	Кол-во	Описание
1	140045	4	WASHER, SPRING, Belleville, M10,
2	43138	4	SCREW, Hex, M10 x 20, 8.8, Full Thd,
3	353308	AR	NUT, M6 x 1, Cl 8,
4	120100	AR	BOLT, Hex, M6 x 20, 8.8,
5	84073695	1	PLATE, FIXING,
6	84073686	1	CANVAS,
7	84072244	1	GRATE,

14.219(A 01) MAIZE CONCAVE, DRUM

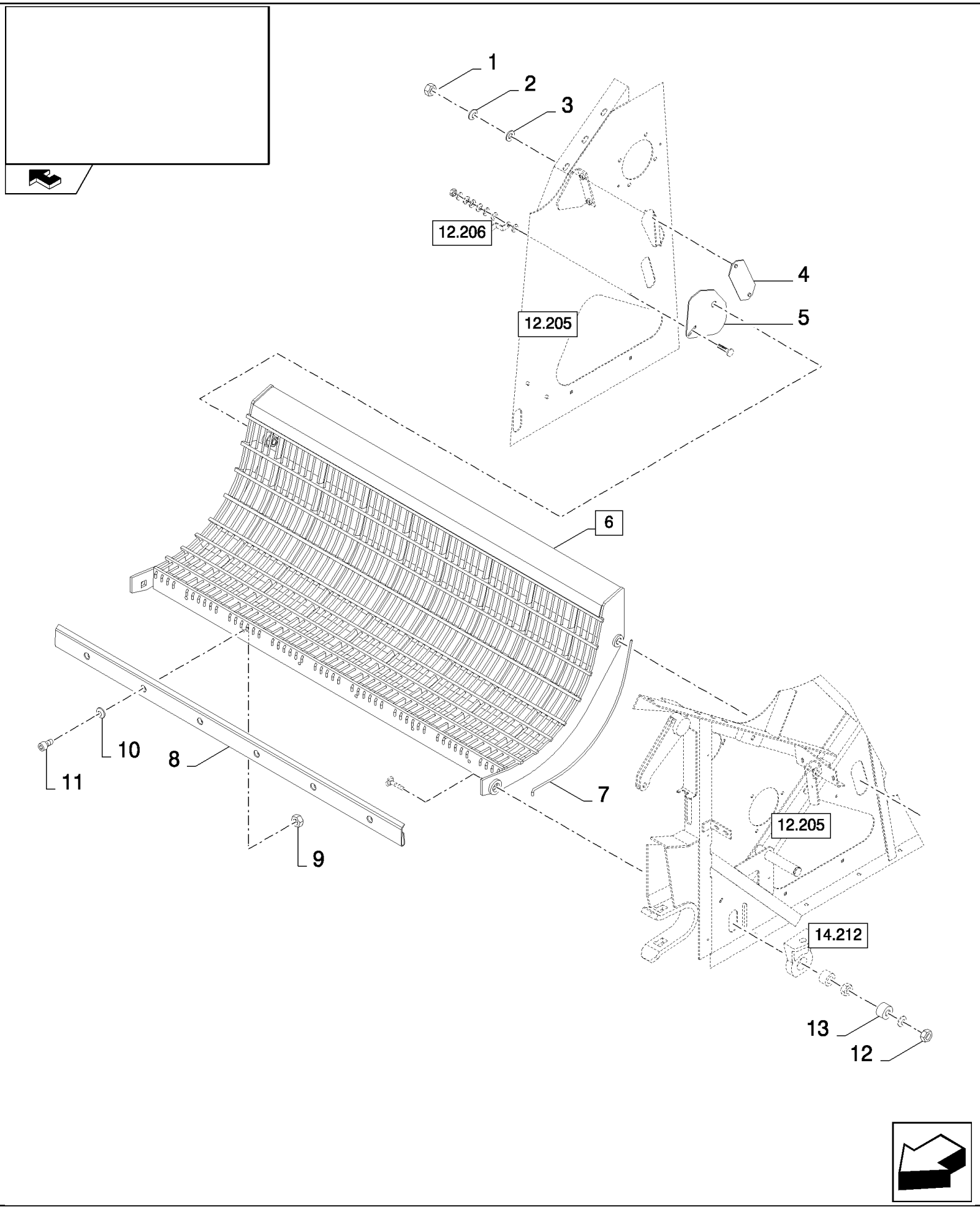

CSX7080 C659 - COMBINE (9/06-8/08)

14.219(A 01) MAIZE CONCAVE, DRUM

ссылка	Номер детали	Кол-во	Описание
1	9706755	2	NUT, M6, Cl 8,
2	322357	2	WASHER, SPRING, Belleville, M6,
3	140040	2	WASHER, M6 x 22 x 2,
4	84443834	1	PLATE, COVER,
5	84443839	1	PLATE, COVER,
6	84076873	1	CONCAVE, (7)
7	84076567	1	WIRE, RETAINING,
8	84072086	1	SHEET, FRONT,
9	100016	6	NUT, M10, Cl 8,
10	140045	6	WASHER, SPRING, Belleville, M10,
11	120052	6	SCREW, Hex Soc Hd, M10 x 25, 8.8,
12	380424	2	NUT, LOCK, M20 x 2.5, Cl 8,
13	84007394	2	BUSHING,

14.220(A 01) RICE DRUM 56

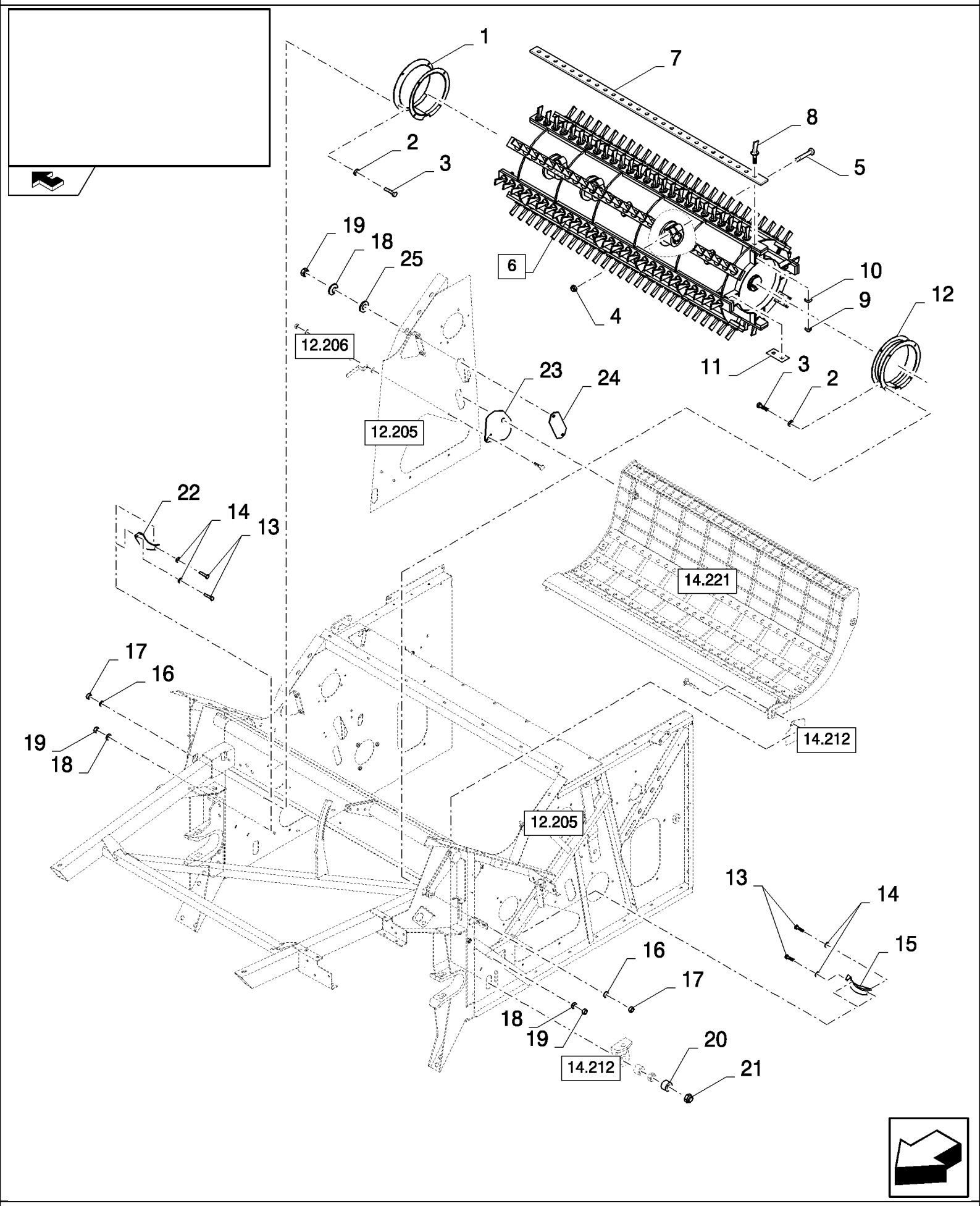

CSX7080 C659 - COMBINE (9/06-8/08)

14.220(A 01) RICE DRUM 56

ссылка	Номер детали	Кол-во	Описание
1	424748	1	SHIELD,
2	140016	6	WASHER, M8 x 16 x 1.6,
3	120104	6	SCREW, Hex, M8 x 20, 8.8,
4	86000441	4	NUT, M16 x 2, Cl 8,
5	350616	4	SCREW, Hex, M16 x 90, 8.8,
6	84452125	1	DRUM, (7 to 11)
7	80411043	8	BAR,
8	84432313	216	TOOTH, RICE,
9	86000441	236	NUT, M16 x 2, Cl 8,
10	394631	216	WASHER, 17MM
11	331138	15	PLATE,
12	84452645	1	PROTECTING COVER,
13	120100	4	BOLT, Hex, M6 x 20, 8.8,
14	412649	4	WASHER, SPRING, Belleville, M6,
15	354592	1	SHIELD,
16	322358	6	WASHER, SPRING, Belleville, M8,
17	9706690	6	NUT, M8, Cl 8,
18	322357	6	WASHER, SPRING, Belleville, M6,
19	9706755	6	NUT, M6, Cl 8,
20	84007394	2	BUSHING,
21	412180	2	NUT, LOCK, M20 x 2.5, Cl 8, M20
22	354593	1	SHIELD,
23	84443839	1	PLATE, COVER,
24	84443834	1	PLATE, COVER,
25	140040	2	WASHER, M6 x 22 x 2,

14.220(B 01) RICE PINS

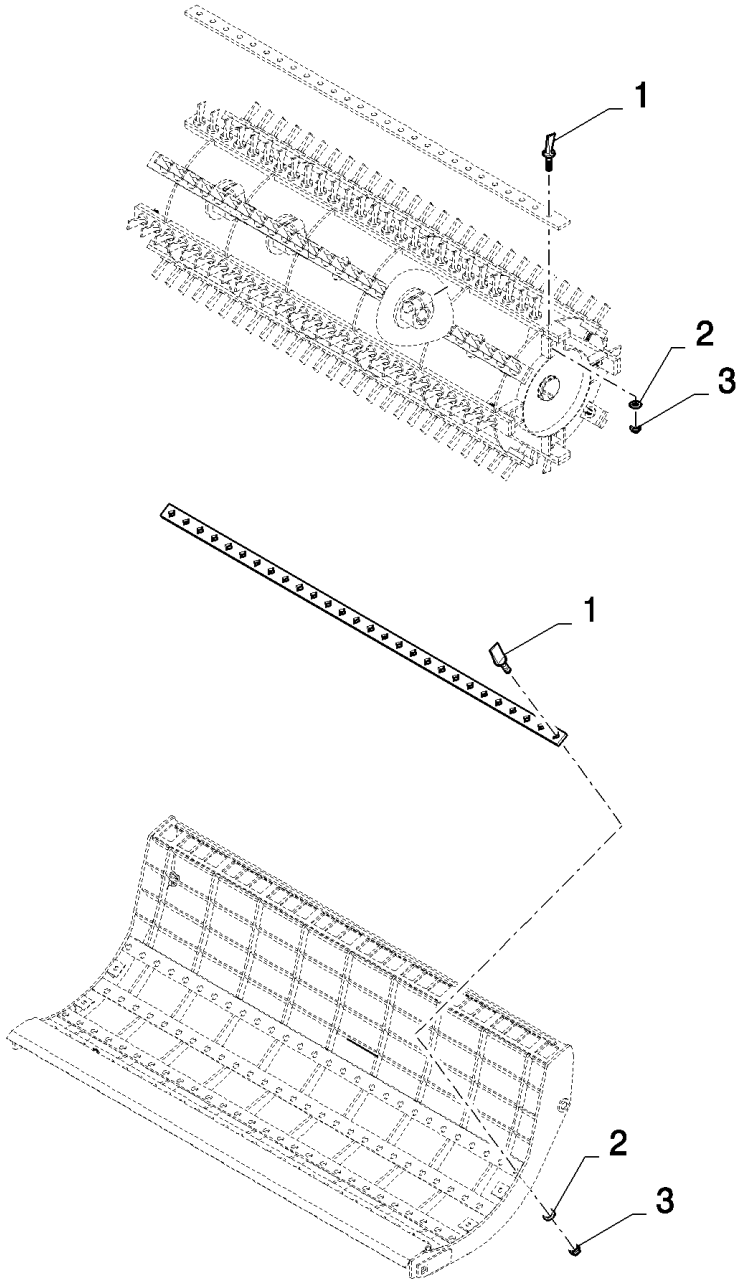

CSX7080 C659 - COMBINE (9/06-8/08)

14.220(B 01) RICE PINS

ссылка	Номер детали	Кол-во	Описание
1	396935	25	TOOTH, RICE,
2	394631	25	WASHER,
3	86000441	25	NUT, M16 x 2, Cl 8,

14.221(A 01) SPIKE TOOTH CONCAVE 56

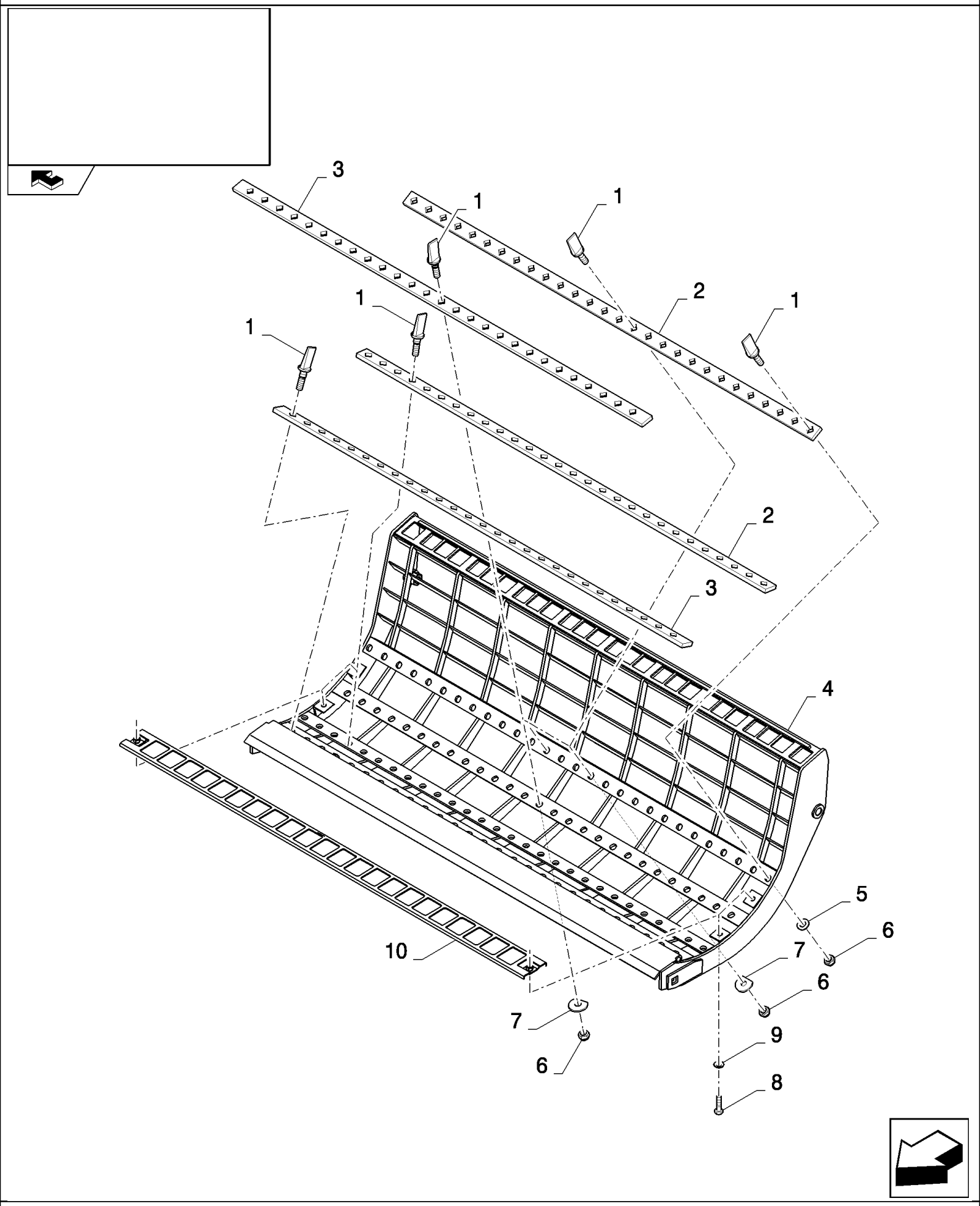

CSX7080 C659 - COMBINE (9/06-8/08)

14.221(A 01) SPIKE TOOTH CONCAVE 56

ссылка	Номер детали	Кол-во	Описание
1	396935	81	TOOTH, RICE,
2	411298	2	PLATE, FIXING,
3	411304	2	PLATE, FIXING,
4	84437361	1	CONCAVE,
5	394631	78	WASHER, 17MM
6	86000441	81	NUT, M16 x 2, Cl 8,
7	333041	3	WASHER, 16.5MM
8	43138	4	SCREW, Hex, M10 x 20, 8.8, Full Thd,
9	140045	4	WASHER, SPRING, Belleville, M10,
10	84038642	2	GRILLE,

14.222(01) STRAW FLOW BEATER

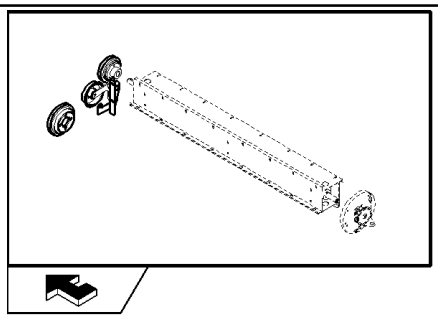

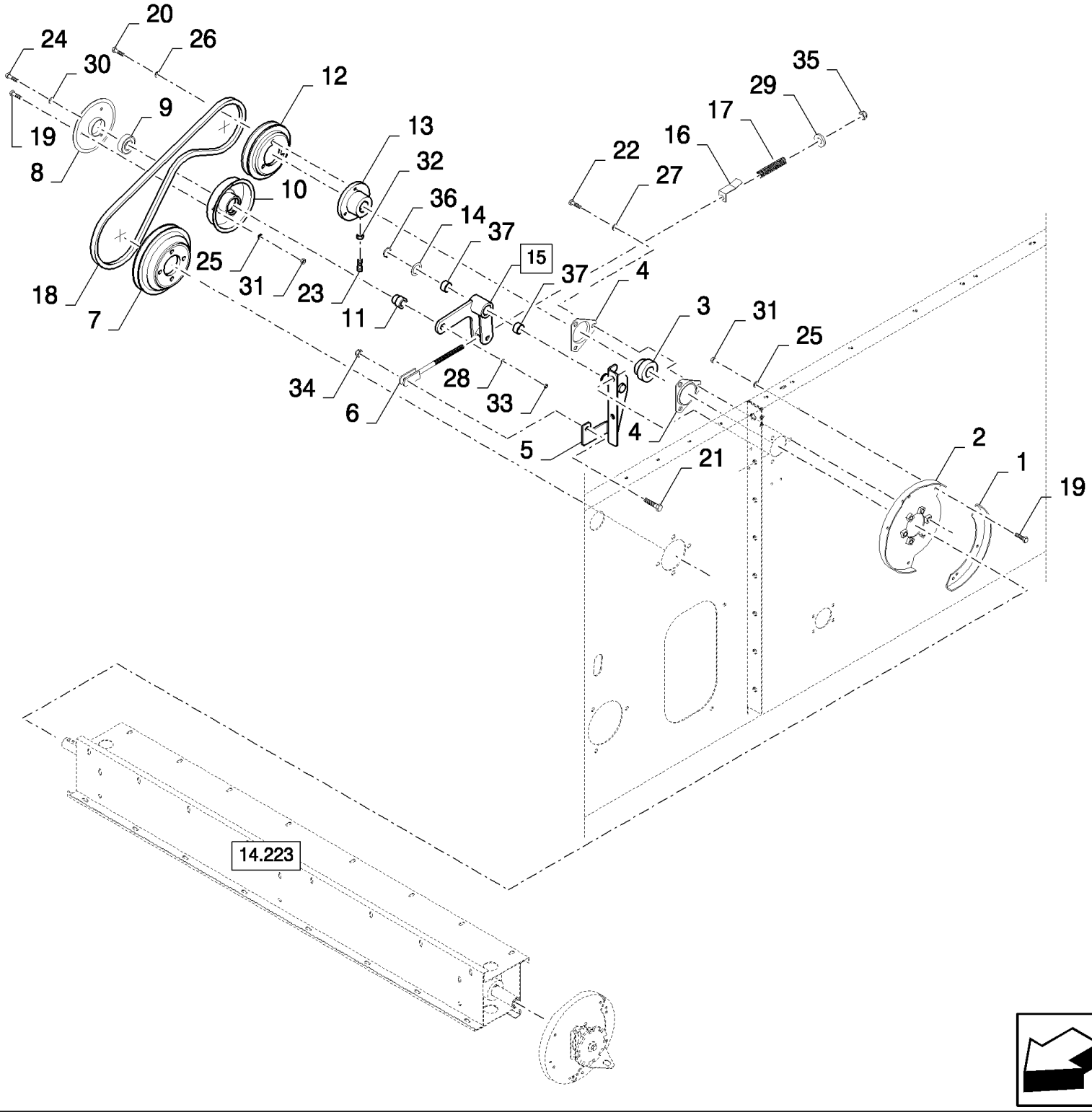

CSX7080 C659 - COMBINE (9/06-8/08)

14.222(01) STRAW FLOW BEATER

ссылка	Номер детали	Кол-во	Описание
1	84455165	1	RING,
2	84454496	1	RING,
3	325106	1	BEARING ASSY,
4	86548970	1	FLANGE,
5	84454911	1	SUPPORT,
6	84443958	1	ROD,
7	84455194	1	PULLEY,
8	84441841	1	HALF-PULLEY,
9	443898	1	BEARING, BALL,
10	84441735	1	HALF-PULLEY,
11	9515145	1	BUSHING,
12	84454786	1	PULLEY,
13	84454813	1	FLANGE,
14	140103	1	WASHER,
15	84454919	1	LEVER, (37)
16	84036453	1	INDICATOR,
17	308447	1	SPRING,
18	84817624	1	BELT, TRANSMISSION, , BSN C627
18	87739437	1	BELT, TRANSMISSION, , ASN D628
19	86508568	9	SCREW, Hex, M6 x 16, 8.8,
20	43127	3	BOLT, Hex, M8 x 25, 8.8,
21	43128	1	BOLT, Hex, M8 x 30, 8.8,
22	43139	3	SCREW, Hex, M10 x 25, 8.8, Full Thd,
23	397382	1	SCREW,
24	120091	1	BOLT, Hex, M16 x 60, 8.8,
25	412649	9	WASHER, SPRING, Belleville, M6,
26	322358	3	WASHER, SPRING, Belleville, M8,
27	140045	3	WASHER, SPRING, Belleville, M10,
28	140048	1	WASHER, SPRING, Belleville, M16,
29	378245	1	WASHER, M12,
30	140020	1	WASHER, M16 x 30 x 3,
31	9706755	9	NUT, M6, Cl 8,
32	100016	1	NUT, M10, Cl 8,
33	100020	1	NUT, M16, Cl 8,
34	86629542	1	NUT, LOCK, M8 x 1.25, Cl 8,
35	412126	1	NUT, LOCK, M12 x 1.75, Cl 8,
36	370002	1	RING, SNAP, M25, Ext,
37	382975	2	SLEEVE,

CSX7080 C659 - COMBINE (9/06-8/08)

14.223(A 01) STRAW FLOW BEATER

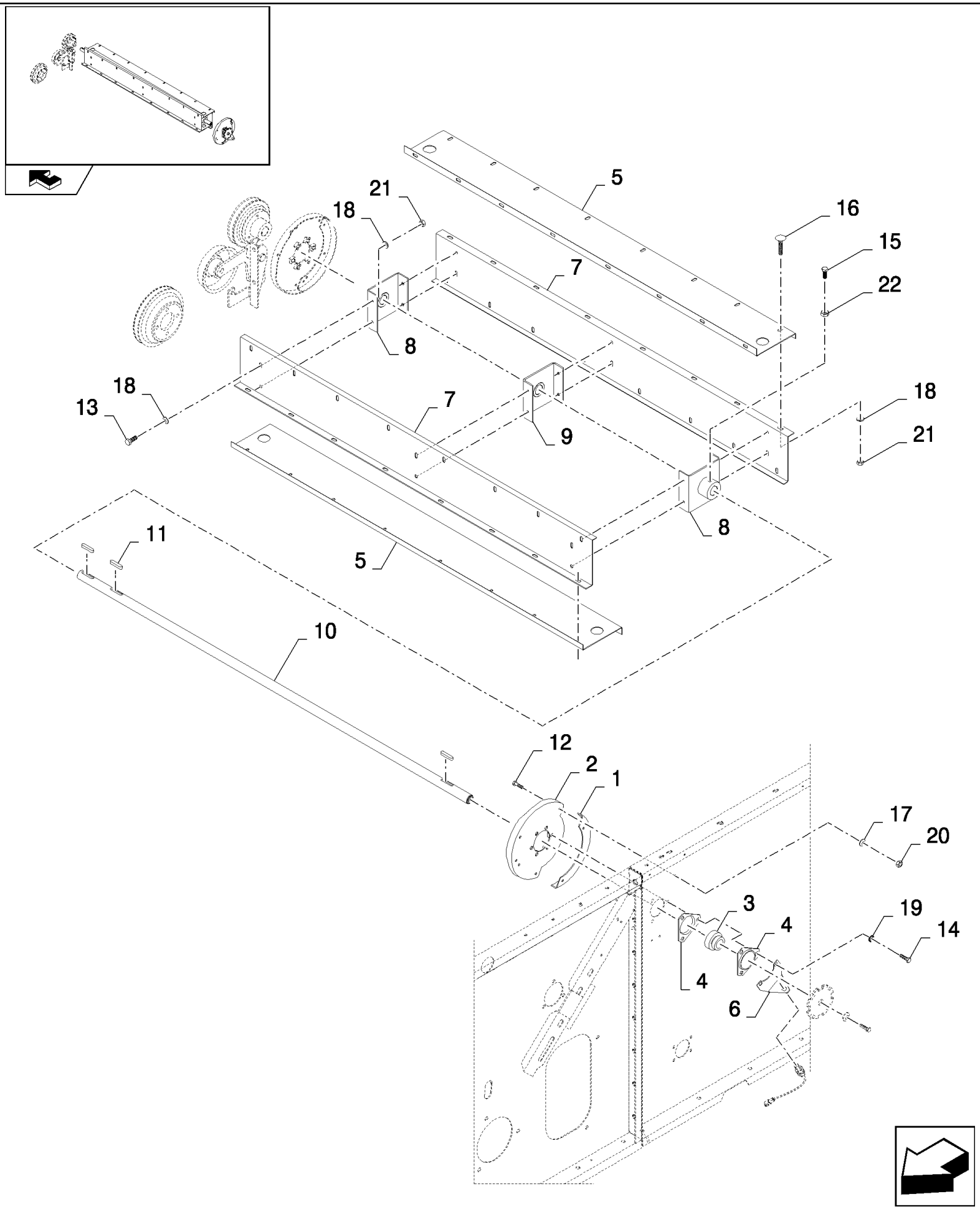

CSX7080 C659 - COMBINE (9/06-8/08)

14.223(A 01) STRAW FLOW BEATER

ссылка	Номер детали	Кол-во	Описание
1	84455165	1	RING,
2	84454496	1	RING,
3	325106	1	BEARING ASSY,
4	86548970	1	FLANGE,
5	84454497	2	PLATE,
6	84457479	1	SUPPORT,
7	84455163	2	PLATE,
8	84454519	2	PLATE,
9	84454516	1	PLATE,
10	84454524	1	SHAFT,
11	170012	3	KEY,
12	86508568	6	SCREW, Hex, M6 x 16, 8.8,
13	120104	12	SCREW, Hex, M8 x 20, 8.8,
14	43139	3	SCREW, Hex, M10 x 25, 8.8, Full Thd,
15	43140	2	BOLT, Hex, M10 x 30, 8.8, Full Thd,
16	86507486	32	BOLT, CARRIAGE, Short NK, M8 x 20, Cl8.8, Full Thd,
17	412649	6	WASHER, SPRING, Belleville, M6,
18	412650	56	WASHER, Belleville, M8,
19	140045	3	WASHER, SPRING, Belleville, M10,
20	9706755	6	NUT, M6, Cl 8,
21	9706690	44	NUT, M8, Cl 8,
22	320648	2	NUT, M10, Cl 8,

14.224(01) CONCAVE, ELECTRICAL CONTROL

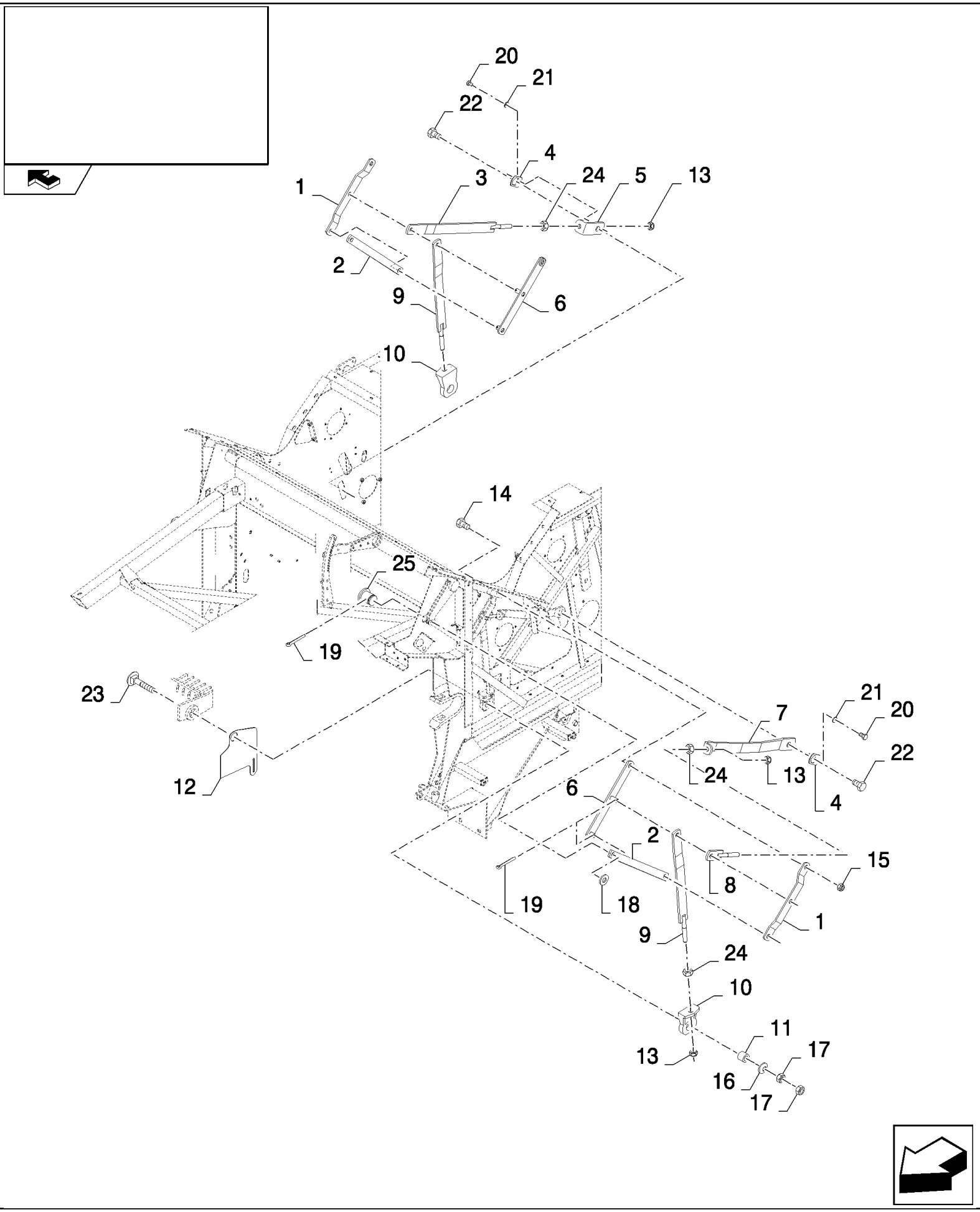

CSX7080 C659 - COMBINE (9/06-8/08)

14.224(01) CONCAVE, ELECTRICAL CONTROL

ссылка	Номер детали	Кол-во	Описание
1	450358	2	PINION, BEVEL,
2	84073937	2	LEVER,
3	84073915	1	LEVER,
4	434568	2	PLATE, LOCKING,
5	87515310	1	BRACKET,
6	84073630	2	LEVER,
7	87515304	1	LEVER,
8	84431035	1	LEVER,
9	84073647	2	LEVER,
10	748975	2	SUPPORT,
11	84072025	2	BUSHING,
12	84431052	2	PLATE,
13	412066	4	NUT, LOCK, M16 x 2, Cl 8,
14	120090	4	SCREW, Hex, M16 x 50, 8.8,
15	86000441	2	NUT, M16 x 2, Cl 8,
16	322359	2	WASHER, SPRING, Belleville, M20,
17	9706694	4	NUT, M20, Cl 8,
18	140090	2	WASHER,
19	130007	6	PIN, SPLIT (COTTER), M4 x 25,
20	378056	2	BOLT, Hex, M6 x 10, 8.8, Full Thd,
21	322357	3	WASHER, SPRING, Belleville, M6,
22	382101	2	BOLT, Hex, M20 x 80, 8.8,
23	84007392	2	BOLT, CARRIAGE, Short NK, M20 x 100, Cl8.8,
24	100020	4	NUT, M16, Cl 8,
25	380840	2	PIN, CLEVIS, M16 x 30,

14.225(01) CONCAVE, ELECTRICAL CONTROL

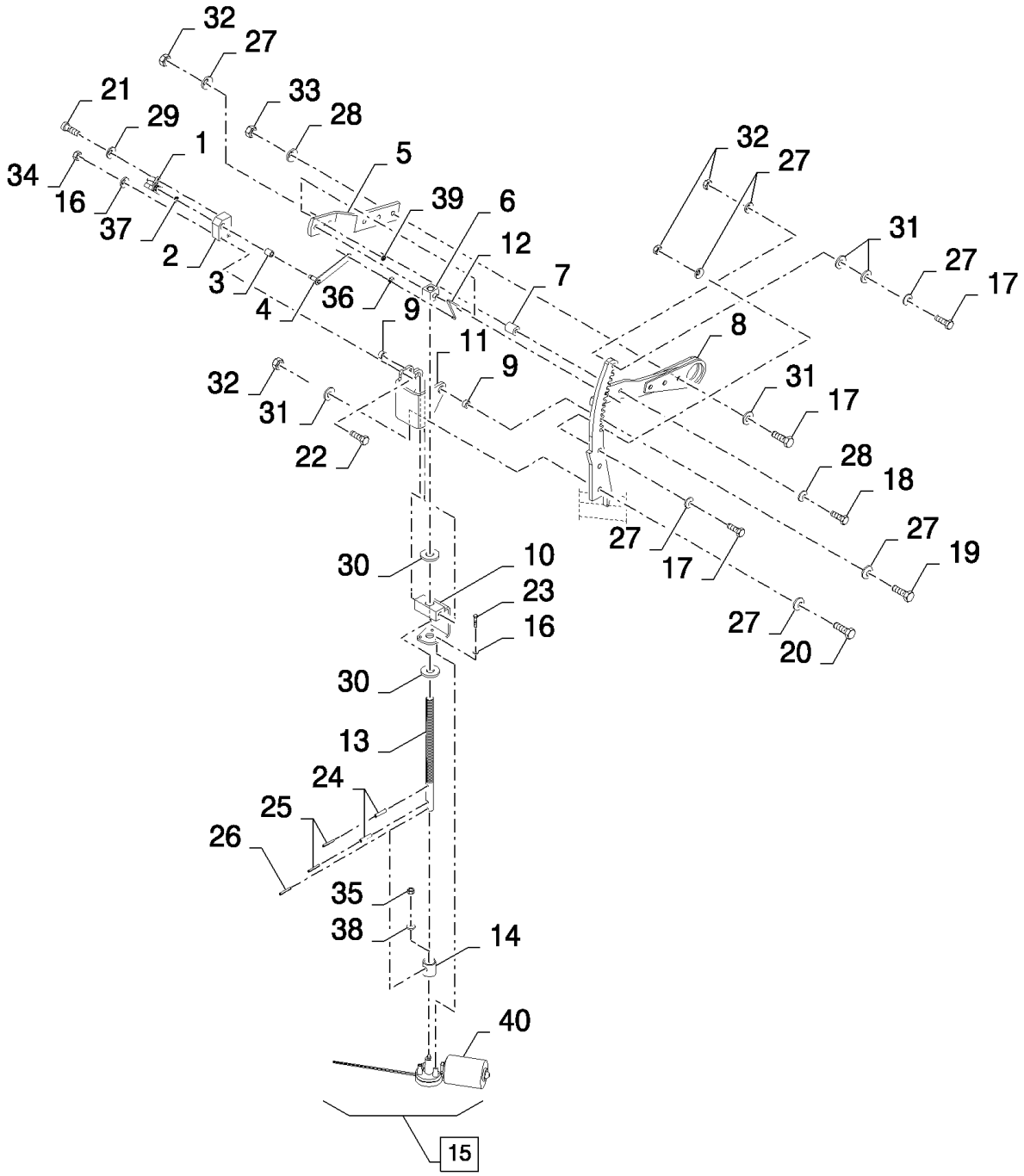

CSX7080 C659 - COMBINE (9/06-8/08)

14.225(01) CONCAVE, ELECTRICAL CONTROL

ссылка	Номер детали	Кол-во	Описание
1	86977396	1	POTENTIOMETER,
2	84457806	1	BRACKET,
3	86516740	1	BUSHING,
4	84462875	1	ARM,
5	84462828	1	REINFORCEMENT,
6	84462953	1	LINK BLOCK,
7	84439930	1	BUSHING,
8	84462826	1	REINFORCEMENT,
9	84015622	2	BUSHING,
10	84462822	1	SUPPORT,
11	84462824	1	BRACKET,
12	84462876	1	ROD,
13	84462951	1	SHAFT,
14	9831501	1	BUSHING,
15	86579537	1	MOTOR, ELECTRIC, (40)
16	322357	5	WASHER, SPRING, Belleville, M6,
17	9706702	5	SCREW, Hex, M12 x 50, 8.8,
18	120071	1	BOLT, Hex, M10 x 65, 8.8,
19	300388	2	SCREW, Hex, M12 x 25, 8.8,
20	300389	2	BOLT, Hex, M12 x 35, 8.8, Full Thd,
21	86511042	2	SCREW, Cross Pan Hd, M4 x 16,
22	43118	2	BOLT, Hex, M6 x 40, 8.8,
23	86508568	3	SCREW, Hex, M6 x 16, 8.8,
24	86548577	2	PIN, M8 x 40, Slotted,
25	86977792	2	PIN, SPLIT (COTTER), M5 x 40, Slotted,
26	300872	1	PIN, LOCK, M8 x 36, Slotted,
27	140046	13	WASHER, Belleville, M12,
28	140045	2	WASHER, SPRING, Belleville, M10,
29	322355	2	WASHER, Belleville, M4,
30	86592703	2	WASHER, M20 x 50 x 6, HT,
31	140018	5	WASHER, M12 x 24 x 2.5,
32	9706685	7	NUT, M12, Cl 8,
33	100016	1	NUT, M10, Cl 8,
34	9706755	2	NUT, M6, Cl 8,
35	9706690	1	NUT, M8, Cl 8,
36	9821714	1	CLIP,
37	86000439	1	RING, SNAP, #37, Ext,
38	322358	1	WASHER, SPRING, Belleville, M8,
39	398561	1	CLIP,
40	410448	1	MOTOR, ELECTRIC,

14.226(A 01) ADDITIONAL PARTS WITHOUT STRAWFLOW BEATER - FOR LATERALE ONLY

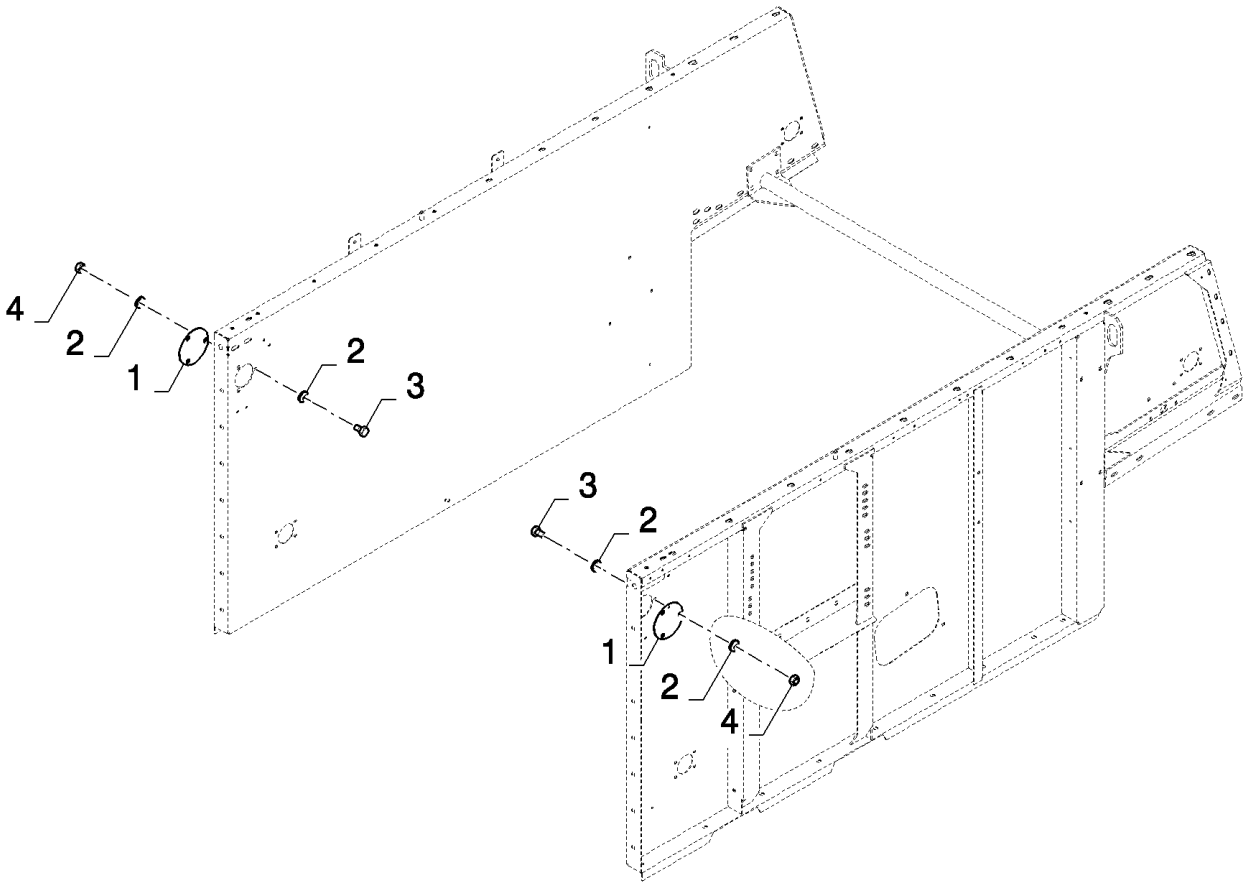

CSX7080 C659 - COMBINE (9/06-8/08)

14.226(A 01) ADDITIONAL PARTS WITHOUT STRAWFLOW BEATER - FOR LATERALE ONLY

ссылка	Номер детали	Кол-во	Описание
1	87516422	2	PLATE, COVER,
2	322358	12	WASHER, SPRING, Belleville, M8,
3	120103	6	BOLT, Hex, M8 x 16, 8.8,
4	9706690	6	NUT, M8, Cl 8,

CLEANING	**NETTOYAGE**	**LIMPIEZA**	**RENSNING**
PULITURA	**REINIGUNG**	**LIMPEZA**	**REINIGING**

SEC. 15

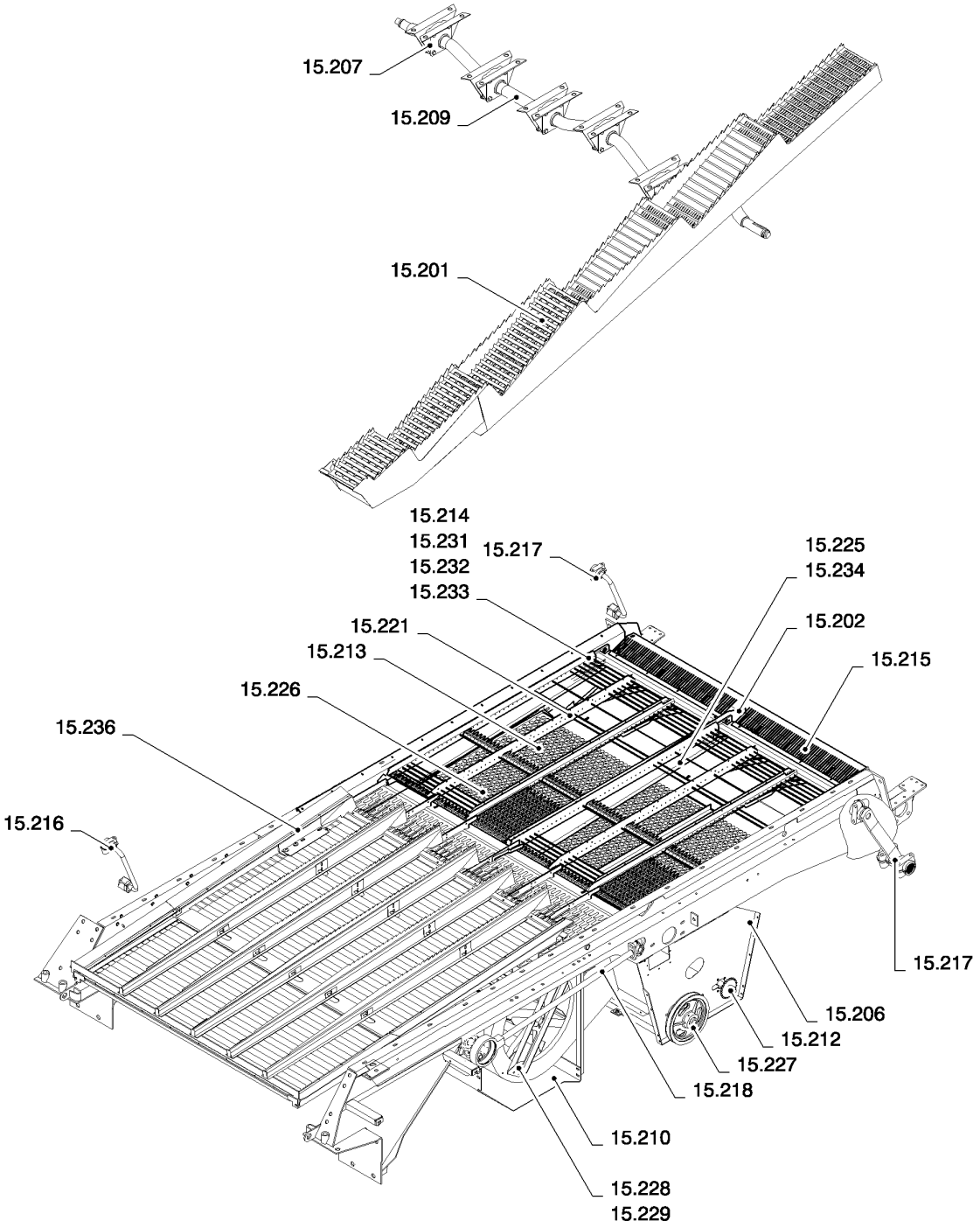

ссылка	Номер детали	Кол-во	Описание

CLEANING	**NETTOYAGE**	**LIMPIEZA**	**RENSNING**
PULITURA	**REINIGUNG**	**LIMPEZA**	**REINIGING**

SEC. 15

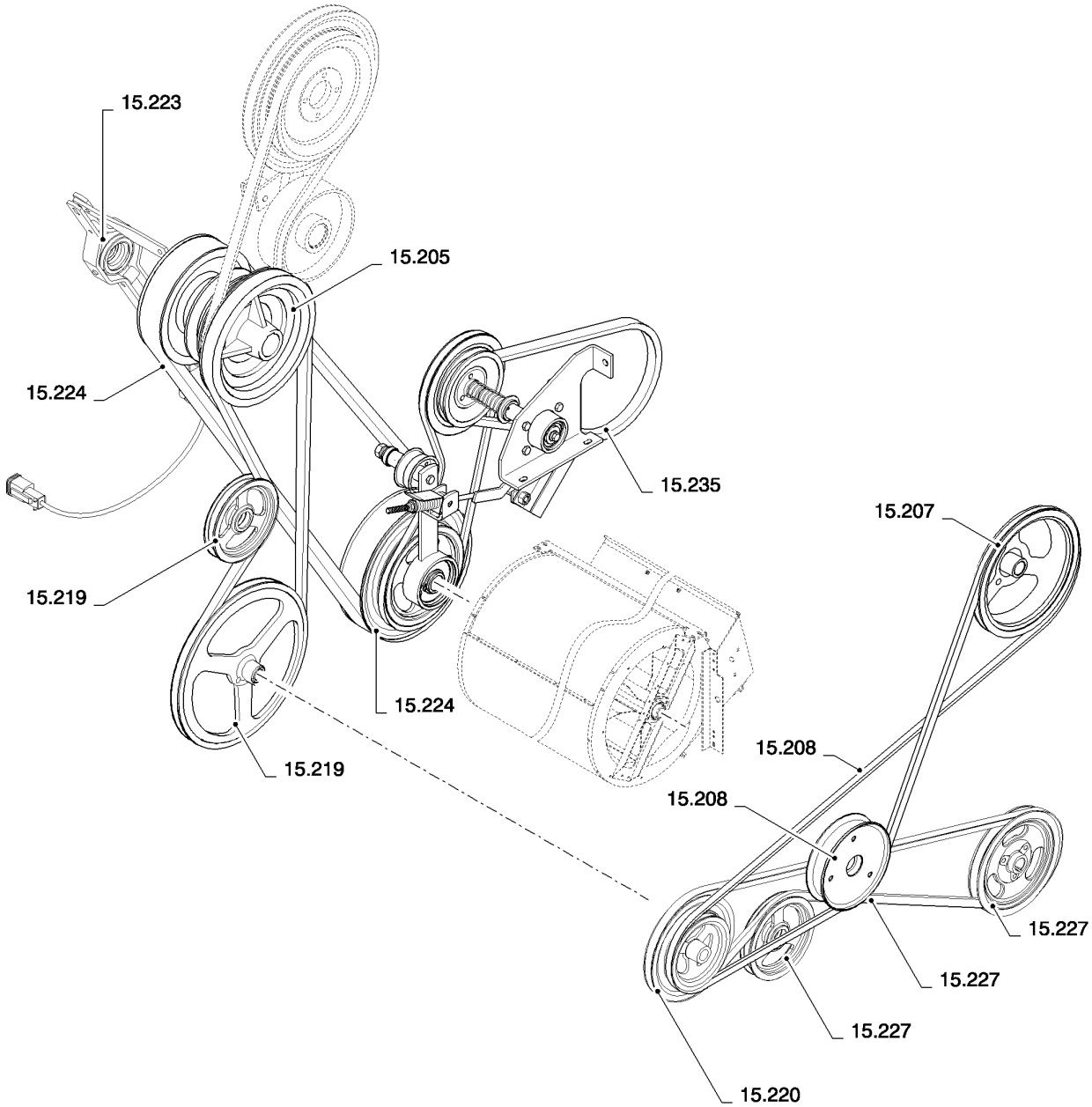

ссылка	Номер детали	Кол-во	Описание

15.201(B 01) STRAW WALKERS AND COVER PLATES WITH ROTARY SEPARATOR

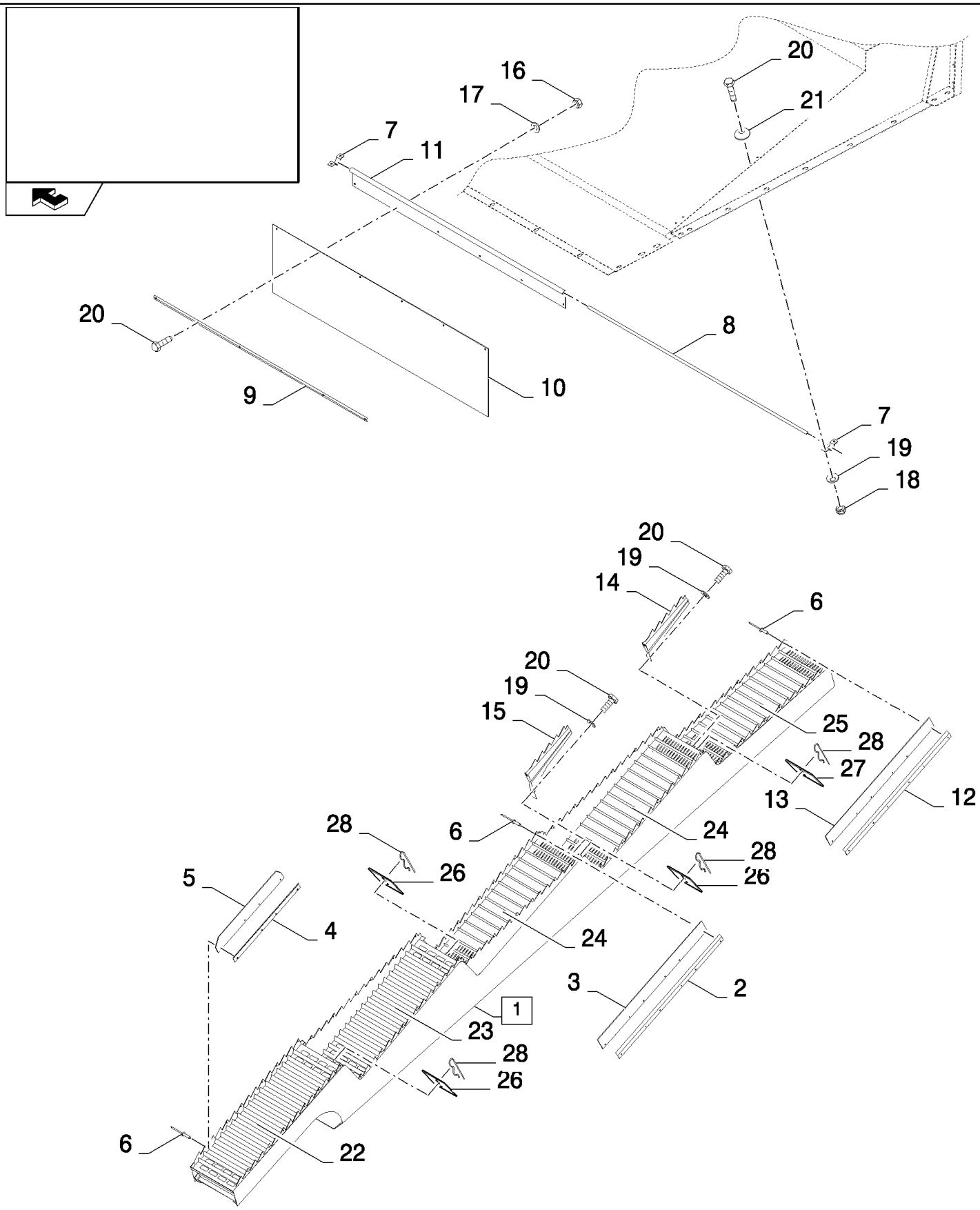

CSX7080 C659 - COMBINE (9/06-8/08)

15.201(B 01) STRAW WALKERS AND COVER PLATES WITH ROTARY SEPARATOR

ссылка	Номер детали	Кол-во	Описание
1	87357957	6	STRAW WALKER, (22 to 25)
2	84057552	6	PLATE, FIXING,
3	84434206	6	CANVAS,
4	84065041	2	PLATE, FIXING,
5	84065042	2	CANVAS,
6	446453	54	RIVET,
7	84058757	2	COLLAR, RETAINER,
8	84058867	1	SHAFT,
9	84058869	1	PLATE, FIXING,
10	84058875	1	CANVAS,
11	84453137	1	HINGE,
12	84431464	2	PLATE, FIXING,
13	84431465	2	CANVAS,
14	84446407	6	RAKE,
15	84446428	6	RAKE,
16	353308	7	NUT, M6 x 1, Cl 8,
17	140040	7	WASHER, M6 x 22 x 2,
18	9706755	4	NUT, M6, Cl 8,
19	322357	28	WASHER, SPRING, Belleville, M6,
20	86508568	35	SCREW, Hex, M6 x 16, 8.8,
21	412649	4	WASHER, SPRING, Belleville, M6,
22	87358996	1	
23	84449155	1	
24	84062225	2	LINER, METAL,
25	84072766	1	LINER, METAL,
26	309623	6	COVER,
27	397862	18	PLATE, STEEL,
28	180042	24	PIN, SPLIT (COTTER), Hex, 1/4"-20 x 1 3/4", G5,

15.201(C 01) STRAW WALKERS AND COVER PLATES WITH ROTARY SEPARATOR - FOR LATERALE ONLY

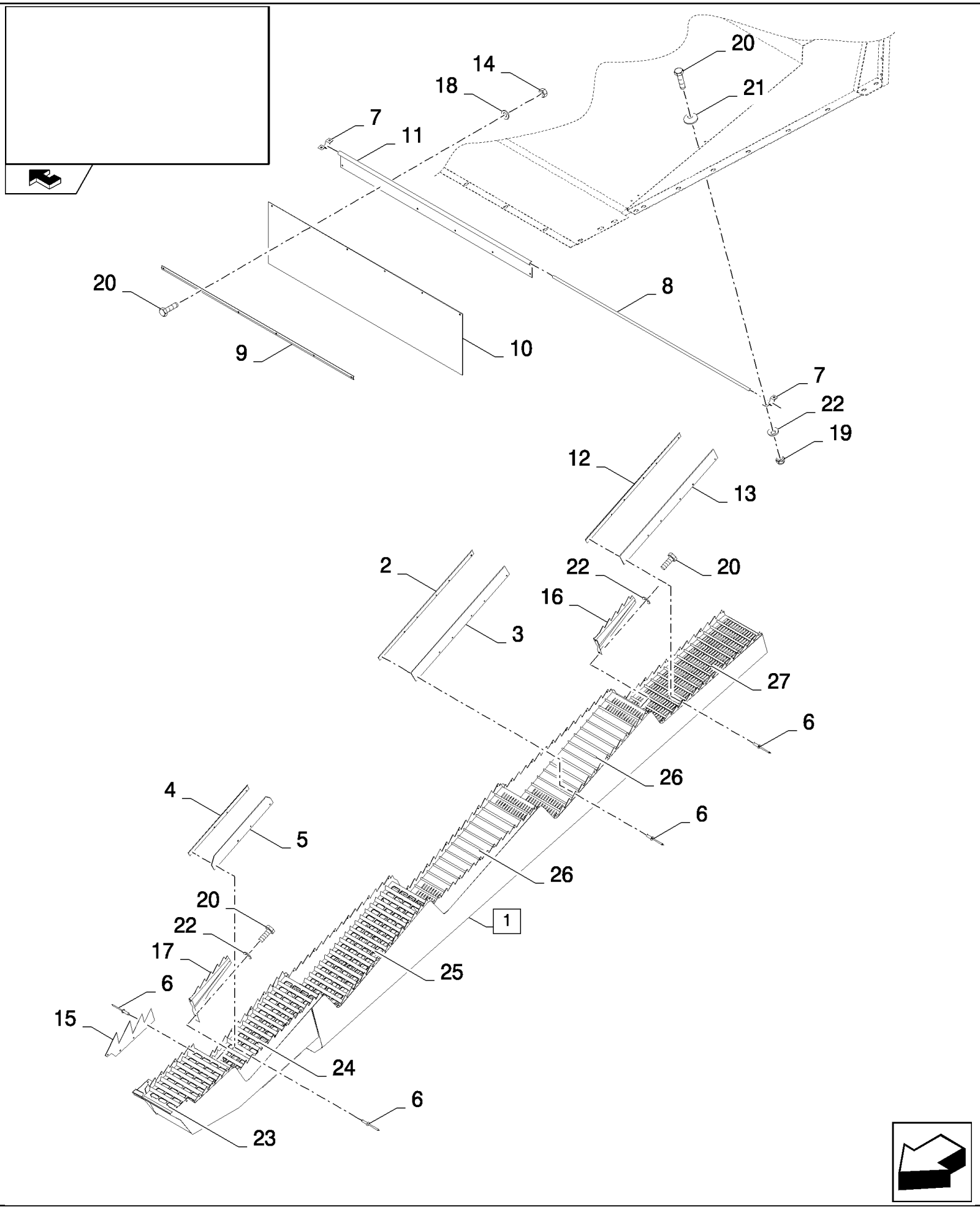

CSX7080 C659 - COMBINE (9/06-8/08)

15.201(C 01) STRAW WALKERS AND COVER PLATES WITH ROTARY SEPARATOR - FOR LATERALE ONLY

ссылка	Номер детали	Кол-во	Описание
1	87360773	6	STRAW WALKER, (23 to 27)
2	84057552	2	PLATE, FIXING,
3	84434206	2	CANVAS,
4	84065041	2	PLATE, FIXING,
5	84065042	2	CANVAS,
6	446453	30	RIVET,
7	84058757	2	COLLAR, RETAINER,
8	84058867	1	SHAFT,
9	84058869	1	PLATE, FIXING,
10	84058875	1	CANVAS,
11	84453137	1	HINGE,
12	84431464	2	PLATE, FIXING,
13	84431465	2	CANVAS,
14	353308	AR	NUT, M6 x 1, Cl 8,
15	87386545	5	
16	84446407	6	RAKE,
17	84446428	24	RAKE,
18	140040	AR	WASHER, M6 x 22 x 2,
19	9706755	4	NUT, M6, Cl 8,
20	86508568	AR	SCREW, Hex, M6 x 16, 8.8,
21	412649	4	WASHER, SPRING, Belleville, M6,
22	322357	AR	WASHER, SPRING, Belleville, M6,
23	87361077	1	
24	87361076	1	
25	84449155	1	
26	84062225	2	LINER, METAL,
27	84072766	1	LINER, METAL,

CSX7080 C659 - COMBINE (9/06-8/08)

15.202(B 01) SHAKER SHOE, SELF LEVELLING, 'SMART SIEVE'

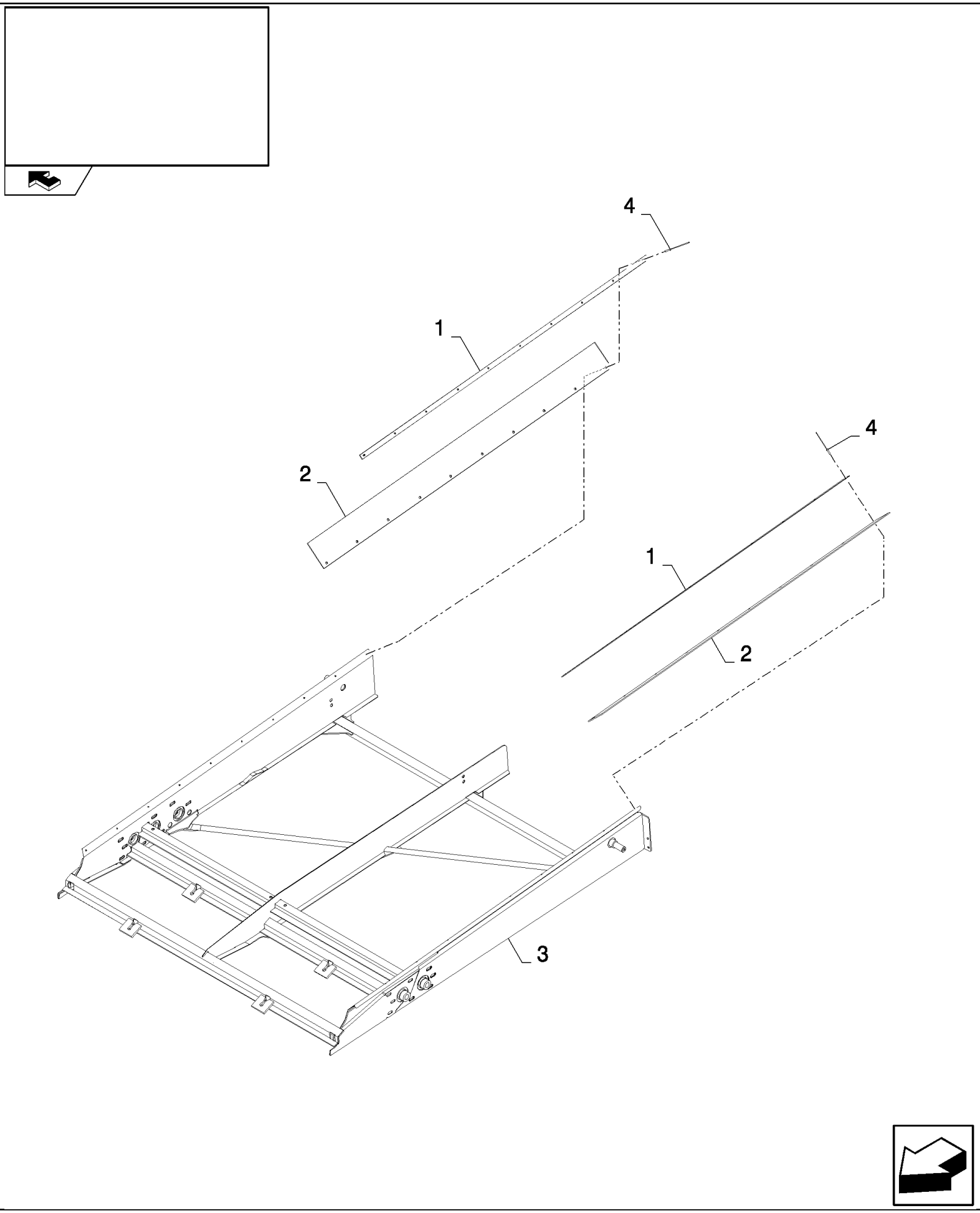

CSX7080 C659 - COMBINE (9/06-8/08)

15.202(B 01) SHAKER SHOE, SELF LEVELLING, 'SMART SIEVE'

ссылка	Номер детали	Кол-во	Описание
1	84459136	2	PLATE, FIXING,
2	84458980	2	CANVAS,
3	84458862	1	SHOE, SHAKER,
4	445395	20	RIVET, Pop, M4.8 x 18.1,

15.202(C 01) SHAKER SHOE

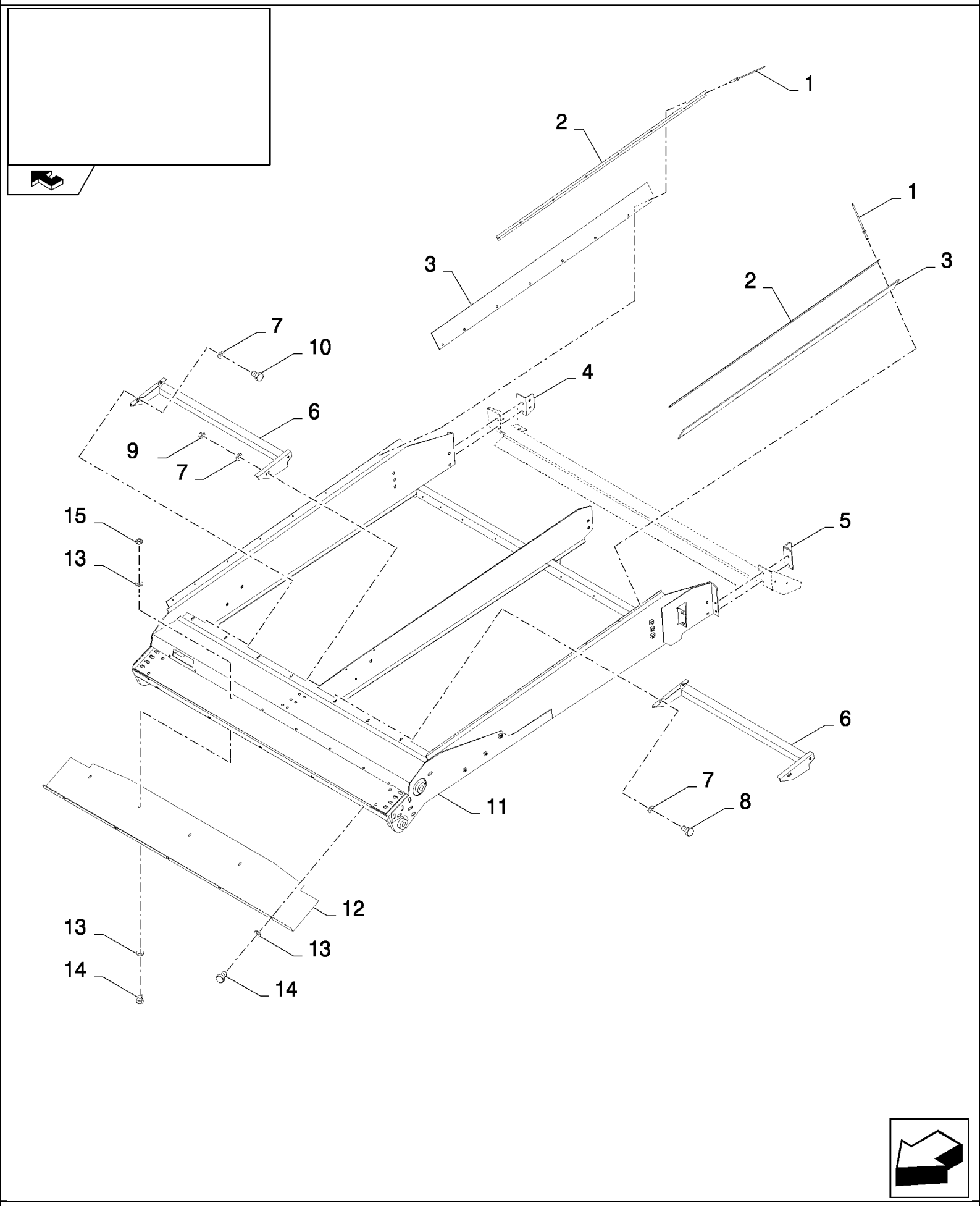

CSX7080 C659 - COMBINE (9/06-8/08)

15.202(C 01) SHAKER SHOE

ссылка	Номер детали	Кол-во	Описание
1	445395	20	RIVET, Pop, M4.8 x 18.1,
2	87531424	2	PLATE, FIXING,
3	84461979	2	CANVAS,
4	84457087	1	SUPPORT,
5	84441931	1	BRACKET, LH
6	84458018	1	SUPPORT, , FOR CSX7060 ONLY
6	84455992	2	SUPPORT, , FOR CSX7080 ONLY
7	322358	AR	WASHER, SPRING, Belleville, M8,
8	120104	2	SCREW, Hex, M8 x 20, 8.8, , FOR CSX7080 ONLY
9	9706690	2	NUT, M8, Cl 8, , FOR CSX7080 ONLY
10	120103	4	BOLT, Hex, M8 x 16, 8.8,
11	87517493	1	SHOE, SHAKER, , FOR CSX7060 ONLY
11	87396822	1	SHOE, SHAKER, , FOR CSX7080 ONLY
12	84439701	1	PLATE, , FOR CSX7060 ONLY
12	84439292	1	PLATE, , FOR CSX7080 ONLY
13	322357	AR	WASHER, SPRING, Belleville, M6,
14	86508568	AR	SCREW, Hex, M6 x 16, 8.8,
15	9706755	AR	NUT, M6, Cl 8,

15.205(A 01) INTERMEDIATE SHAFT

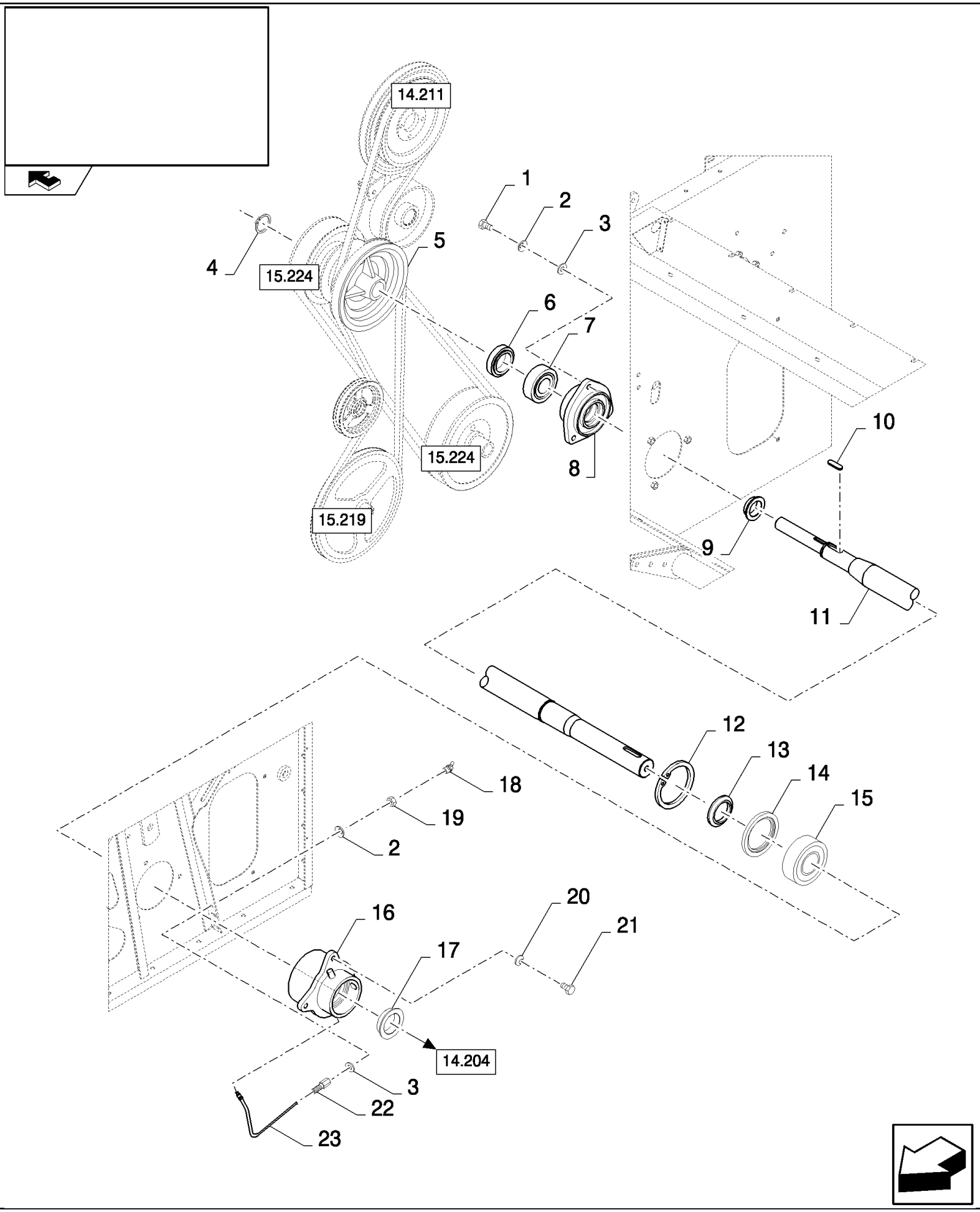

CSX7080 C659 - COMBINE (9/06-8/08)

15.205(A 01) INTERMEDIATE SHAFT

ссылка	Номер детали	Кол-во	Описание
1	43140	3	BOLT, Hex, M10 x 30, 8.8, Full Thd,
2	140045	4	WASHER, SPRING, Belleville, M10,
3	378244	4	WASHER, M10,
4	370007	1	RING, SNAP, M45, Ext,
5	84444886	1	PULLEY,
6	84457165	1	RING,
7	388069	1	BEARING ASSY,
8	439605	1	HOUSING, BEARING,
9	388669	1	RING,
10	170066	1	KEY,
11	84455783	1	SHAFT, PROPELLOR,
12	370014	1	RING, SNAP, M130, Int,
13	84447659	1	RING,
14	87335332	1	RING,
15	84434950	1	BEARING ASSY,
16	84334340	1	HOUSING, BEARING, , BSN C551
16	87546752	1	HOUSING, BEARING, , ASN D552
17	84072254	1	RING, , BSN C551
17	87546728	1	RING, , ASN D552
18	84814929	1	NIPPLE, LUBE,
19	100016	1	NUT, M10, Cl 8,
20	140046	3	WASHER, Belleville, M12,
21	9706687	3	SCREW, Hex, M12 x 30, 8.8,
22	84817004	1	CONNECTOR, HYD.,
23	84077866	1	TUBE,

15.206(B 01) AUGER HOUSING - FOR SELF-LEVELLING ONLY

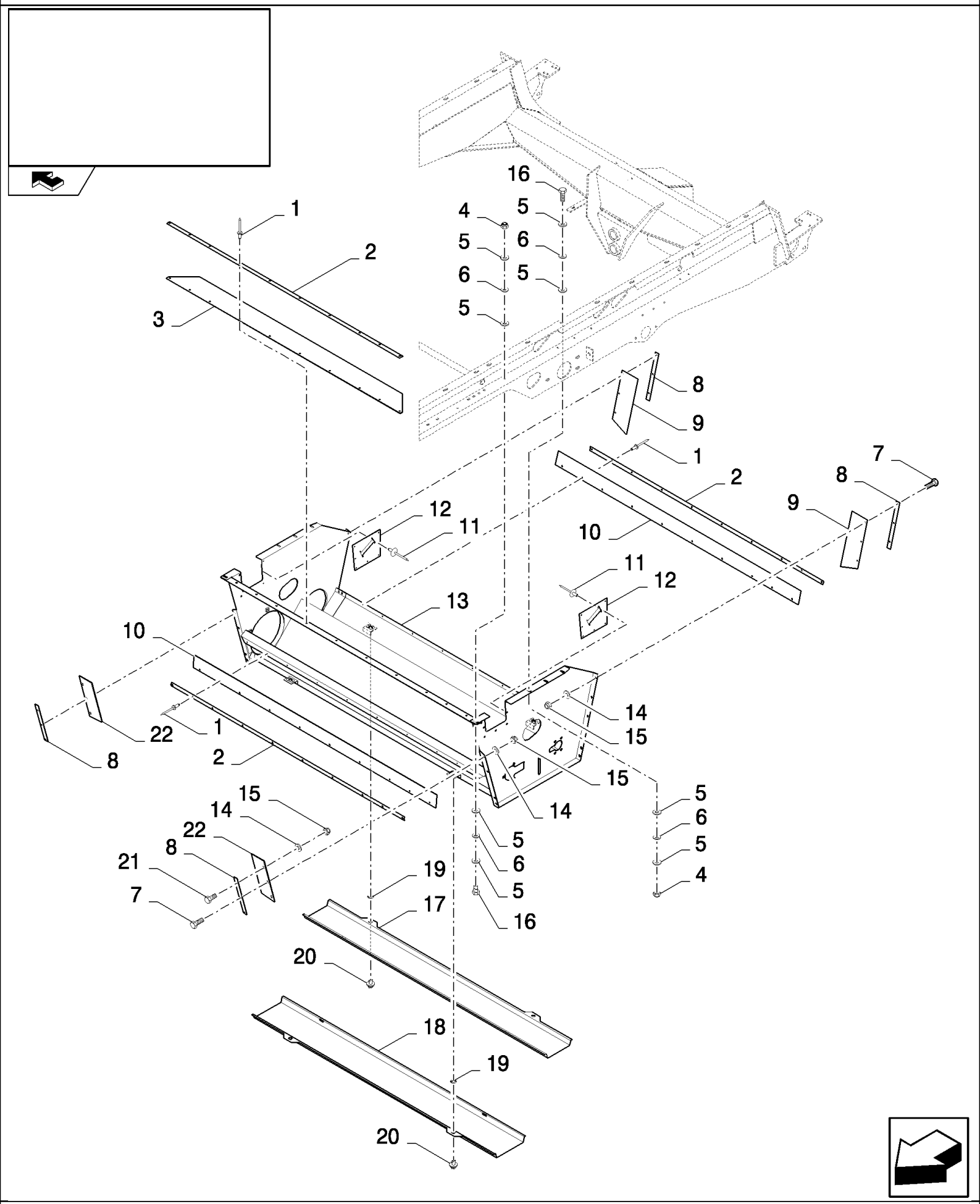

CSX7080 C659 - COMBINE (9/06-8/08)

15.206(B 01) AUGER HOUSING - FOR SELF-LEVELLING ONLY

ссылка	Номер детали	Кол-во	Описание
1	445395	30	RIVET, Pop, M4.8 x 18.1,
2	84989728	3	PLATE, FIXING,
3	84023434	1	CANVAS,
4	86629542	8	NUT, LOCK, M8 x 1.25, Cl 8,
5	140041	32	WASHER, M8 x 28 x 3,
6	190132	16	WASHER, 9MM
7	120100	10	BOLT, Hex, M6 x 20, 8.8,
8	89811571	4	PLATE,
9	89505249	2	CANVAS,
10	84989681	2	CANVAS,
11	9512968	14	RIVET,
12	84459414	2	PLATE,
13	84989577	1	HOUSING,
14	9824259	12	WASHER, M6 x 12 x 1.6,
15	353308	12	NUT, M6 x 1, Cl 8,
16	386045	8	BOLT, Hex, M8 x 45, 8.8,
17	84989666	1	COVER,
18	84989667	1	COVER,
19	9514605	4	WASHER,
20	89514603	4	LOCK,
21	86508568	2	SCREW, Hex, M6 x 16, 8.8,
22	388331	2	SEAL,

15.206(D 01) PERFORATED PLATE

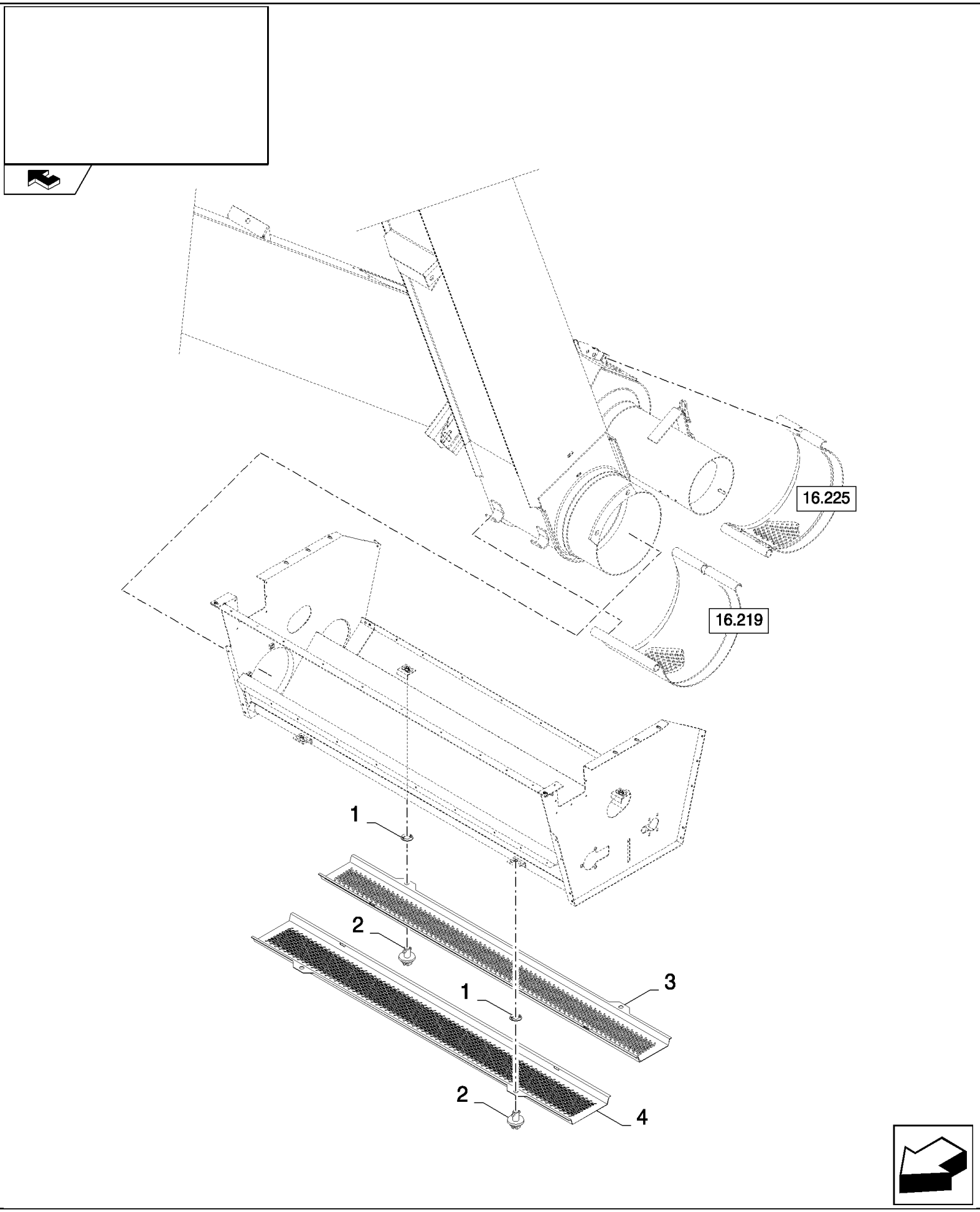

CSX7080 C659 - COMBINE (9/06-8/08)

15.206(D 01) PERFORATED PLATE

ссылка	Номер детали	Кол-во	Описание
1	9514605	4	WASHER,
2	9514603	4	LOCK,
3	84982659	1	GUARD,
4	84982657	1	GUARD,

15.206(E 01) AUGER HOUSING - FOR FIXED CLEANING SHOE ONLY

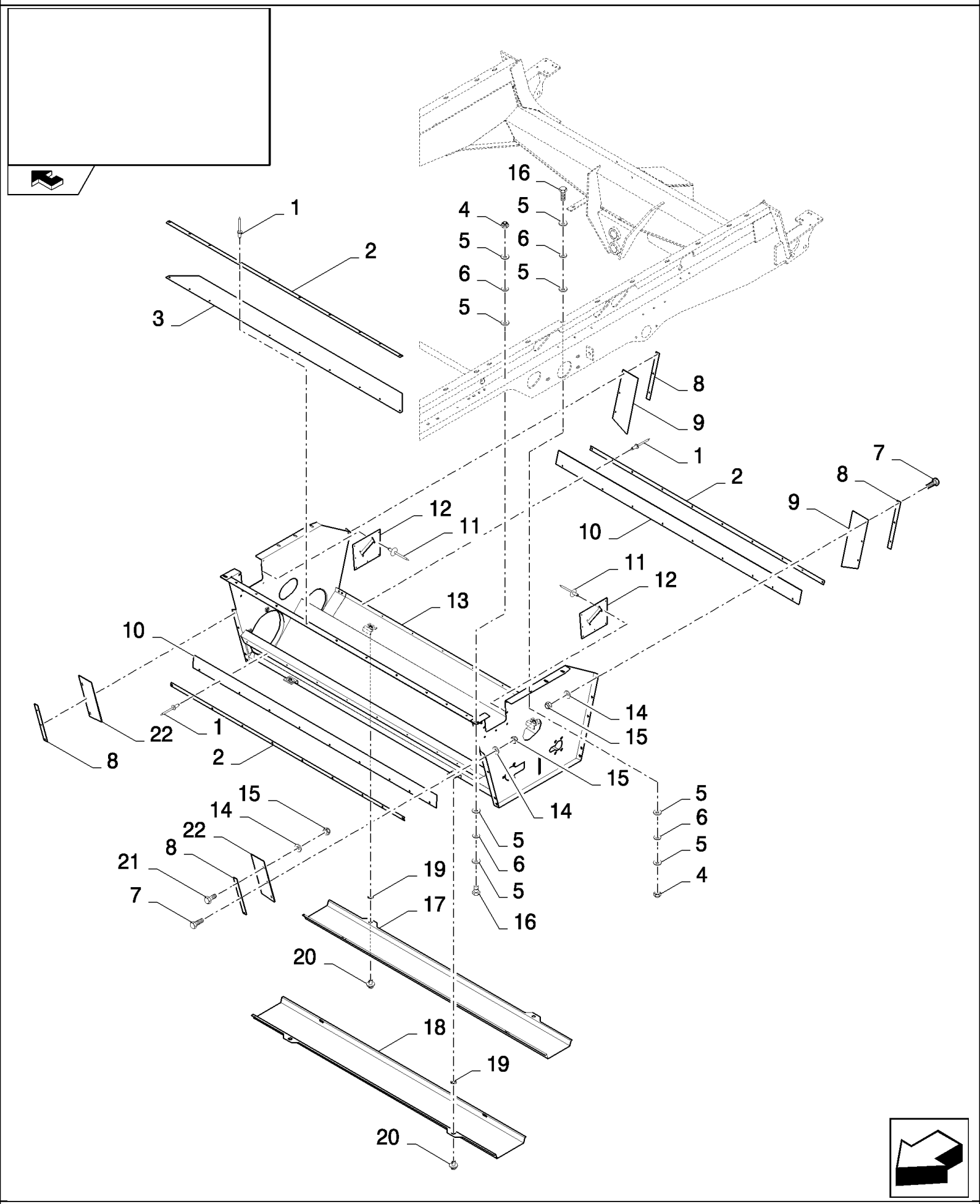

CSX7080 C659 - COMBINE (9/06-8/08)

15.206(E 01) AUGER HOUSING - FOR FIXED CLEANING SHOE ONLY

ссылка	Номер детали	Кол-во	Описание
1	445395	AR	RIVET, Pop, M4.8 x 18.1,
2	9815946	3	PLATE, FIXING, , FOR CSX7060 ONLY
2	84989728	3	PLATE, FIXING, , FOR CSX7080 ONLY
3	84989811	1	CANVAS, , FOR CSX7060 ONLY
3	84023434	1	CANVAS, , FOR CSX7080 ONLY
4	86629542	8	NUT, LOCK, M8 x 1.25, Cl 8,
5	140041	32	WASHER, M8 x 28 x 3,
6	190132	16	WASHER, 9MM
7	120100	10	BOLT, Hex, M6 x 20, 8.8,
8	9811571	4	MOLDING,
9	9505249	2	SEAL,
10	918145	2	CANVAS, , FOR CSX7060 ONLY
10	84989681	2	CANVAS, , FOR CSX7080 ONLY
11	9512968	14	RIVET,
12	89509843	2	CANVAS,
13	84989636	1	HOUSING, , FOR CSX7060 ONLY
13	84989577	1	HOUSING, , FOR CSX7080 ONLY
14	9824259	12	WASHER, M6 x 12 x 1.6,
15	353308	12	NUT, M6 x 1, Cl 8,
16	386045	8	BOLT, Hex, M8 x 45, 8.8,
17	84989674	1	COVER, , FOR CSX7060 ONLY
17	84989666	1	COVER, , FOR CSX7080 ONLY
18	84989677	1	COVER, , FOR CSX7060 ONLY
18	84989667	1	COVER, , FOR CSX7080 ONLY
19	9514605	4	WASHER,
20	89514603	4	LOCK,
21	86508568	2	SCREW, Hex, M6 x 16, 8.8,
22	388331	2	SEAL,

15.207(A 01) STRAW WALKER SHAFTS BEARING

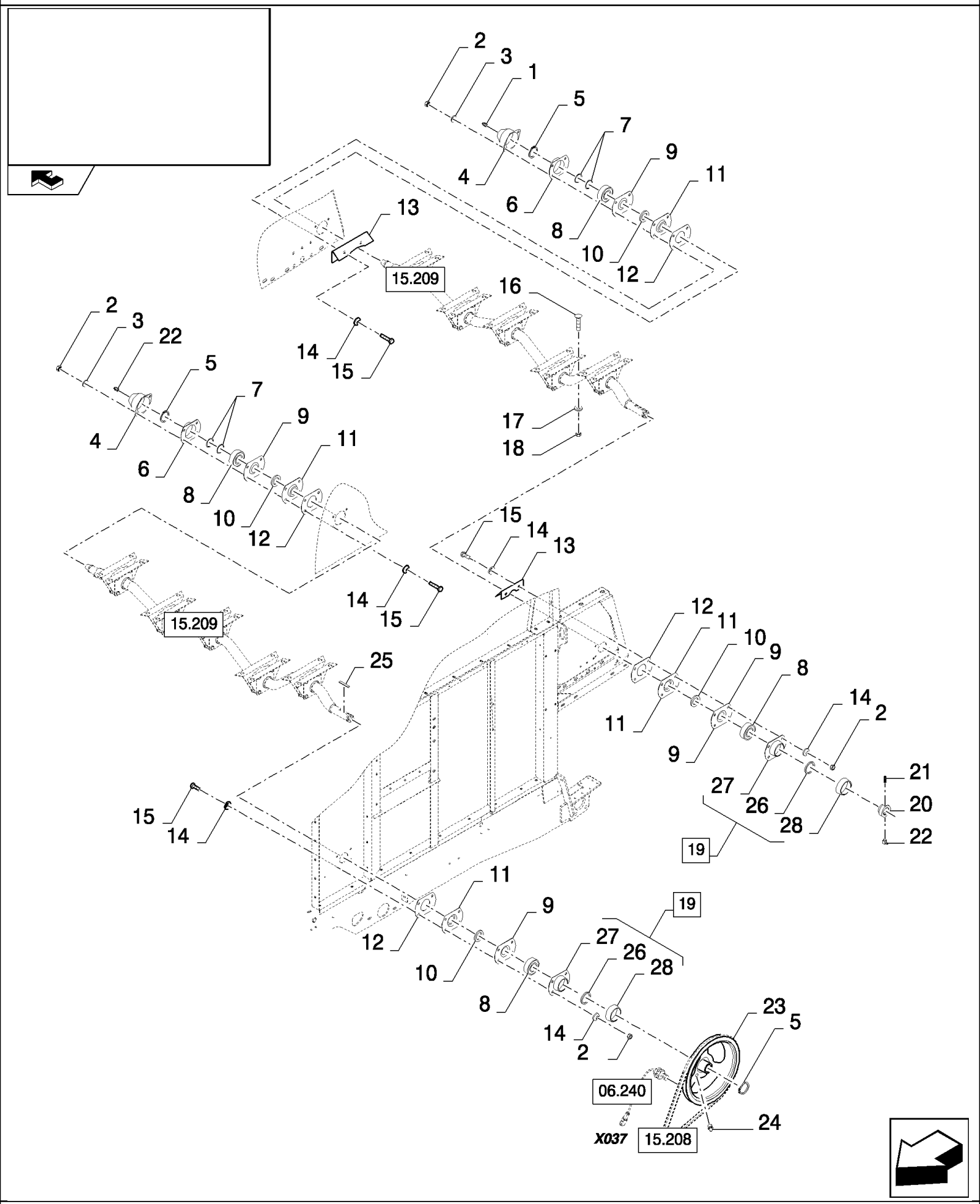

CSX7080 C659 - COMBINE (9/06-8/08)

15.207(A 01) STRAW WALKER SHAFTS BEARING

ссылка	Номер детали	Кол-во	Описание
1	332038	1	NIPPLE, LUBE,
2	9706690	16	NUT, M8, Cl 8,
3	140160	8	WASHER, LOCK,
4	310067	2	COVER,
5	370003	3	RING, SNAP, M30, Ext,
6	84435386	2	HOUSING, BEARING,
7	140108	4	WASHER, 31MM
8	84071761	4	BEARING ASSY,
9	84814927	4	COVER,
10	220061	4	GASKET,
11	84814926	4	COVER,
12	310085	4	FLANGE,
13	84041119	2	PLATE, COVER,
14	322358	24	WASHER, SPRING, Belleville, M8,
15	43127	16	BOLT, Hex, M8 x 25, 8.8,
16	338949	48	BOLT, CARRIAGE, Short NK, M10 x 25, Cl8.8, Full Thd,
17	394629	48	WASHER, LOCK, 10.5MM
18	100037	48	NUT, M10 x 1.5, Cl 8,
19	84435387	2	HOUSING, BEARING, (26 to 28)
20	300014	1	COLLAR,
21	300480	1	SET SCREW, Hex Soc, M10 x 12, Cup Pt,
22	332040	2	NIPPLE, LUBE, 90є, 1/8" NPT x .84" lg,
23	84334185	1	PULLEY,
24	321204	1	NIPPLE, LUBE, M6 x 1, 16mm lg,
25	170010	1	KEY,
26	220063	1	SEAL, FELT,
27	84435386	1	HOUSING, BEARING,
28	80310060	1	

15.208(01) STRAW WALKER DRIVE

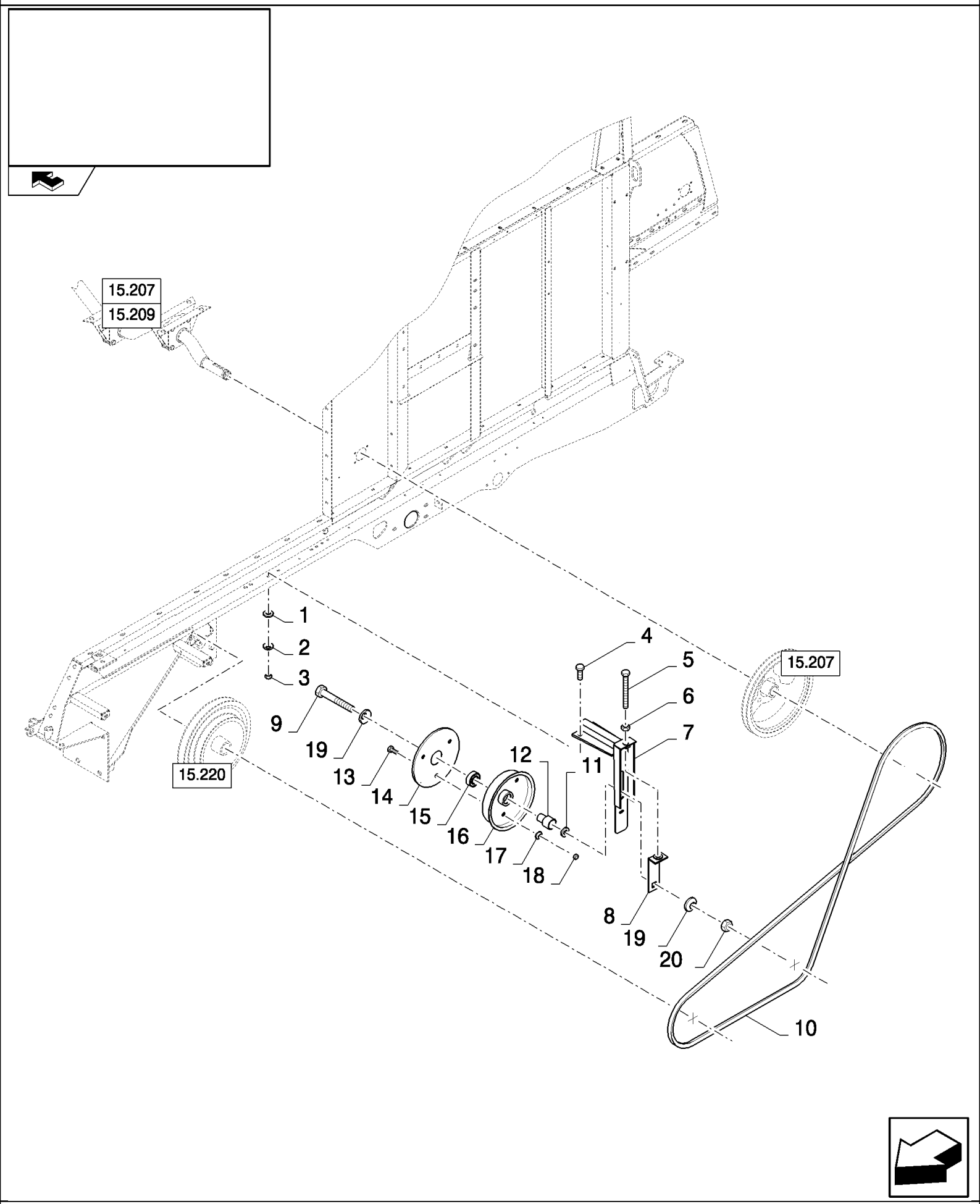

CSX7080 C659 - COMBINE (9/06-8/08)

15.208(01) STRAW WALKER DRIVE

ссылка	Номер детали	Кол-во	Описание
1	378244	2	WASHER, M10,
2	140045	2	WASHER, SPRING, Belleville, M10,
3	100016	2	NUT, M10, Cl 8,
4	43140	2	BOLT, Hex, M10 x 30, 8.8, Full Thd,
5	9837937	1	BOLT, Hex, M12 x 100, 8.8, Full Thd, M12x100
6	9706685	1	NUT, M12, Cl 8,
7	84459371	1	SUPPORT,
8	84989830	1	BRACKET,
9	320246	1	BOLT, Hex, M16 x 70, 8.8, Full Thd,
10	87521887	1	BELT,
11	378246	1	WASHER, 16MM
12	200072	1	BUSHING,
13	86508568	3	SCREW, Hex, M6 x 16, 8.8,
14	290119	1	HALF-PULLEY, , BSN C551
14	330737	1	HALF-PULLEY, , ASN D552
15	443898	1	BEARING, BALL,
16	290122	1	HALF-PULLEY,
17	322357	3	WASHER, SPRING, Belleville, M6,
18	9706755	3	NUT, M6, Cl 8,
19	140048	2	WASHER, SPRING, Belleville, M16,
20	100020	1	NUT, M16, Cl 8,

15.209(A 01) STRAW WALKER SHAFTS

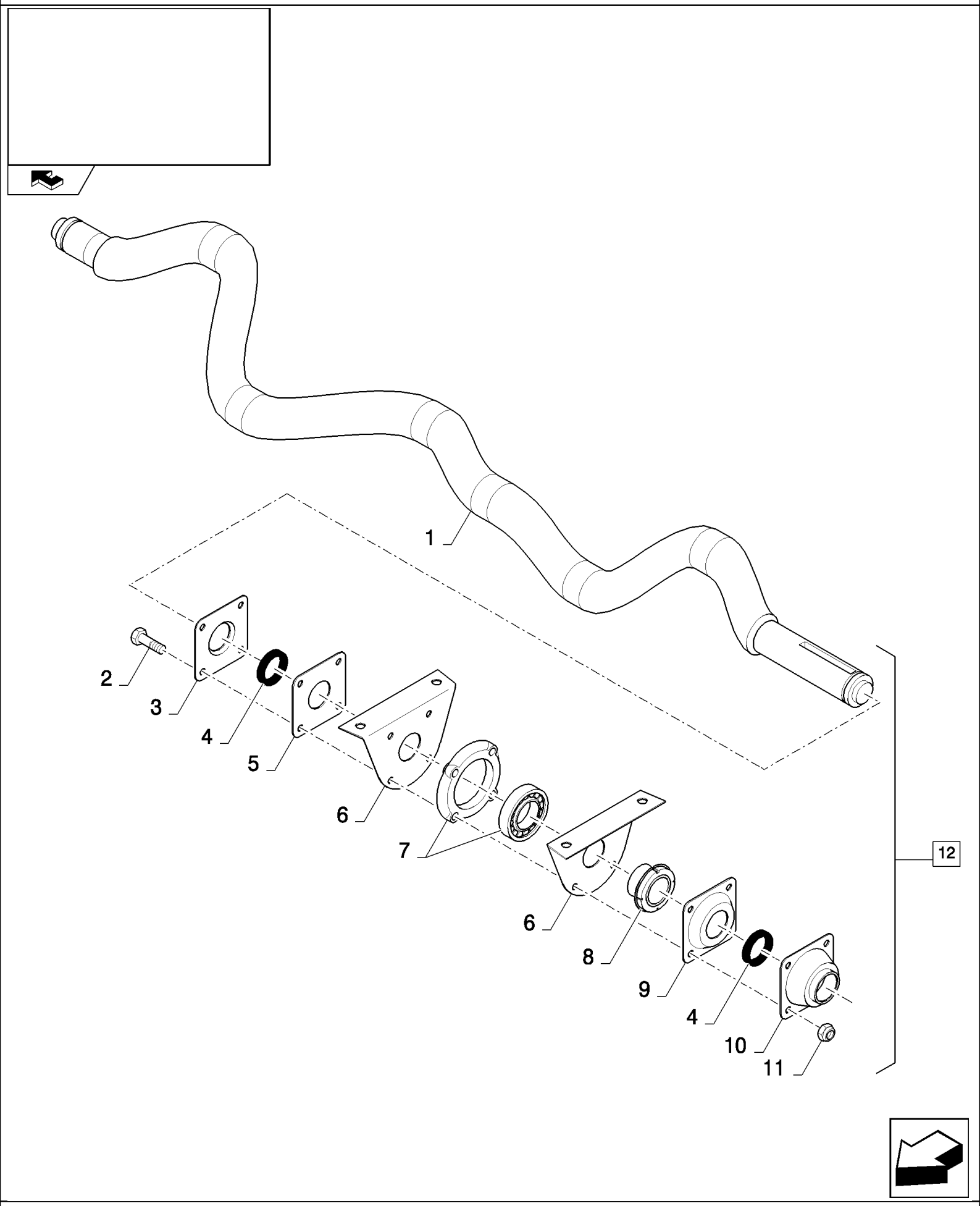

CSX7080 C659 - COMBINE (9/06-8/08)

15.209(A 01) STRAW WALKER SHAFTS

ссылка	Номер детали	Кол-во	Описание
1	84057292	1	SHAFT,
2	43129	24	BOLT, Hex, M8 x 40, 8.8,
3	84072502	6	FLANGE,
4	84057533	12	RING,
5	84072504	6	FLANGE,
6	421876	12	PLATE,
7	84434854	6	BEARING ASSY,
8	84057563	6	BUSHING,
9	84072507	6	FLANGE,
10	84072506	6	FLANGE,
11	86629542	24	NUT, LOCK, M8 x 1.25, Cl 8,
12	84072405	2	SHAFT, (1 to 11)

15.210(A 01) CLEANING SHOE FAN GUARD

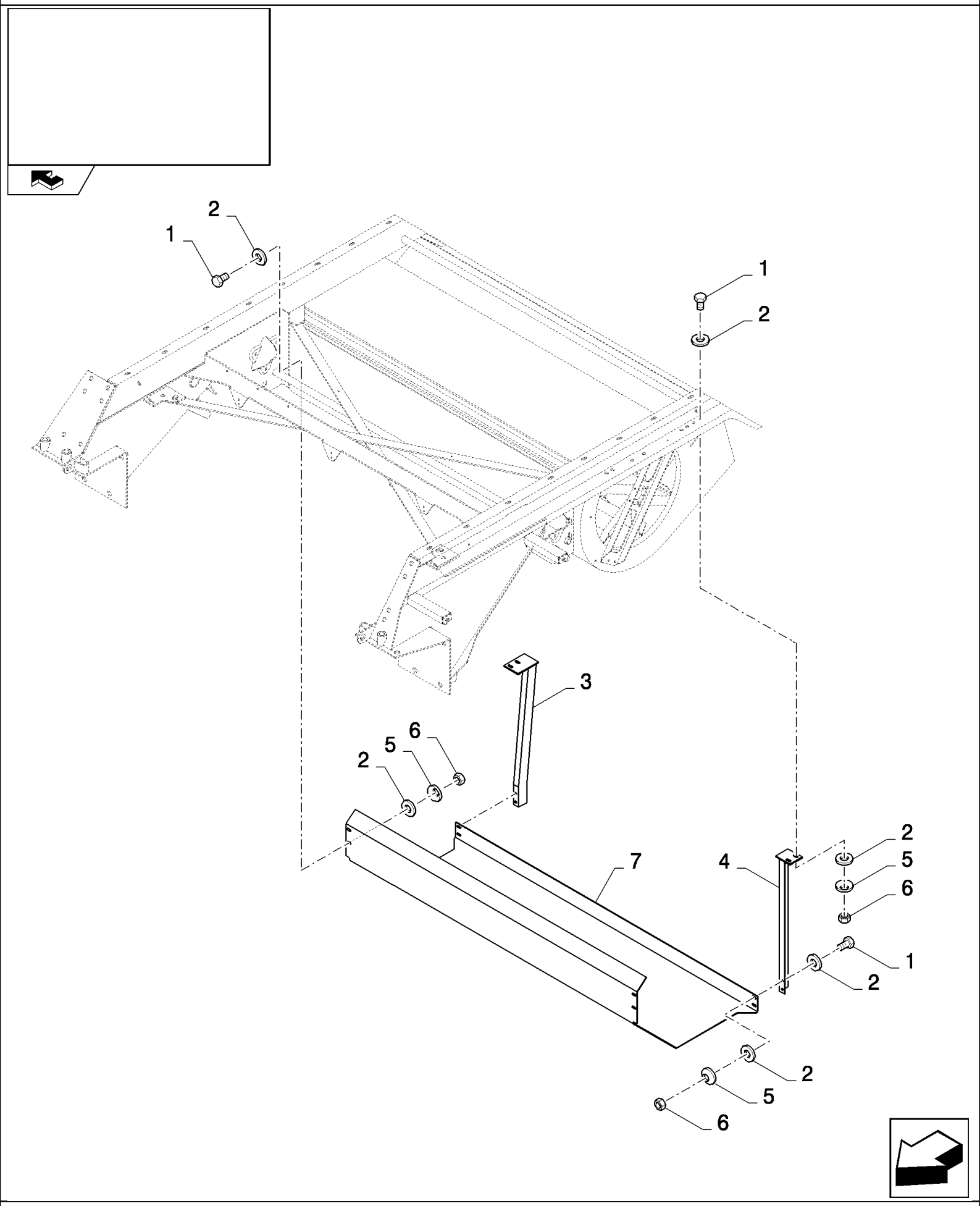

CSX7080 C659 - COMBINE (9/06-8/08)

15.210(A 01) CLEANING SHOE FAN GUARD

ссылка	Номер детали	Кол-во	Описание
1	43127	12	BOLT, Hex, M8 x 25, 8.8,
2	378243	24	WASHER, M8,
3	424732	1	SUPPORT,
4	424728	1	SUPPORT,
5	322358	12	WASHER, SPRING, Belleville, M8,
6	9706690	12	NUT, M8, Cl 8,
7	84432609	1	PLATE,

15.212(01) TAILINGS ELEVATORS, BOTTOM AUGER

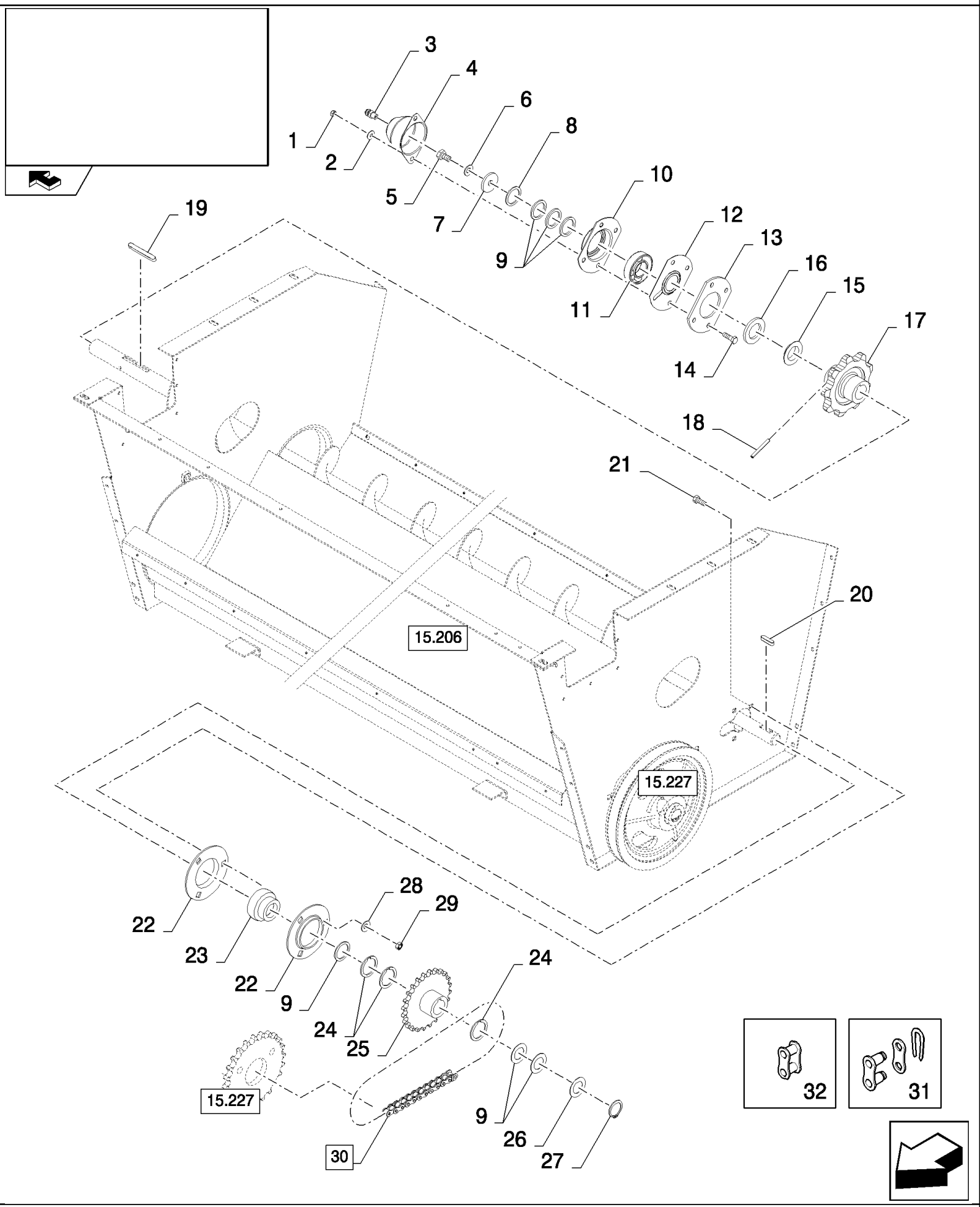

CSX7080 C659 - COMBINE (9/06-8/08)

15.212(01) TAILINGS ELEVATORS, BOTTOM AUGER

ссылка	Номер детали	Кол-во	Описание
1	9706690	4	NUT, M8, Cl 8,
2	322358	4	WASHER, SPRING, Belleville, M8,
3	332038	1	NIPPLE, LUBE,
4	310067	1	COVER,
5	43138	1	SCREW, Hex, M10 x 20, 8.8, Full Thd,
6	140045	1	WASHER, SPRING, Belleville, M10,
7	140219	1	WASHER, 11MM
8	140109	1	WASHER, 31MM
9	140110	6	WASHER, 31MM
10	9511041	1	FLANGE,
11	210064	1	BEARING ASSY,
12	84814927	1	COVER,
13	84981540	1	FLANGE,
14	43127	4	BOLT, Hex, M8 x 25, 8.8,
15	310072	1	RING,
16	220062	1	ELEMENT, SEALING,
17	84981028	1	SPROCKET, DRIVEN, , BSN C659
17	87724884	1	SPROCKET, , ASN D660
18	333960	1	PIN, LOCK, M6 x 50, Slotted,
19	354775	1	KEY,
20	170008	1	KEY,
21	86633356	3	BOLT, CARRIAGE, Short NK, M10 x 25, Cl8.8, Full Thd,
22	40697	2	FLANGE,
23	325106	1	BEARING ASSY,
24	444974	3	WASHER,
25	84981224	1	SPROCKET, DRIVEN,
26	140108	1	WASHER, 31MM
27	370003	1	RING, SNAP, M30, Ext,
28	412655	3	WASHER, SPRING, Belleville, M10,
29	100016	3	NUT, M10, Cl 8,
30	216820	1	CHAIN, (31,32)
31	25194	1	LINK, CONNECTING,
32	25805	63	LINK, CONNECTING,

15.213(A 01) INTERCHANGEABLE LOWER SIEVE, FRAME, BLANK-D=16MM,D=18MM

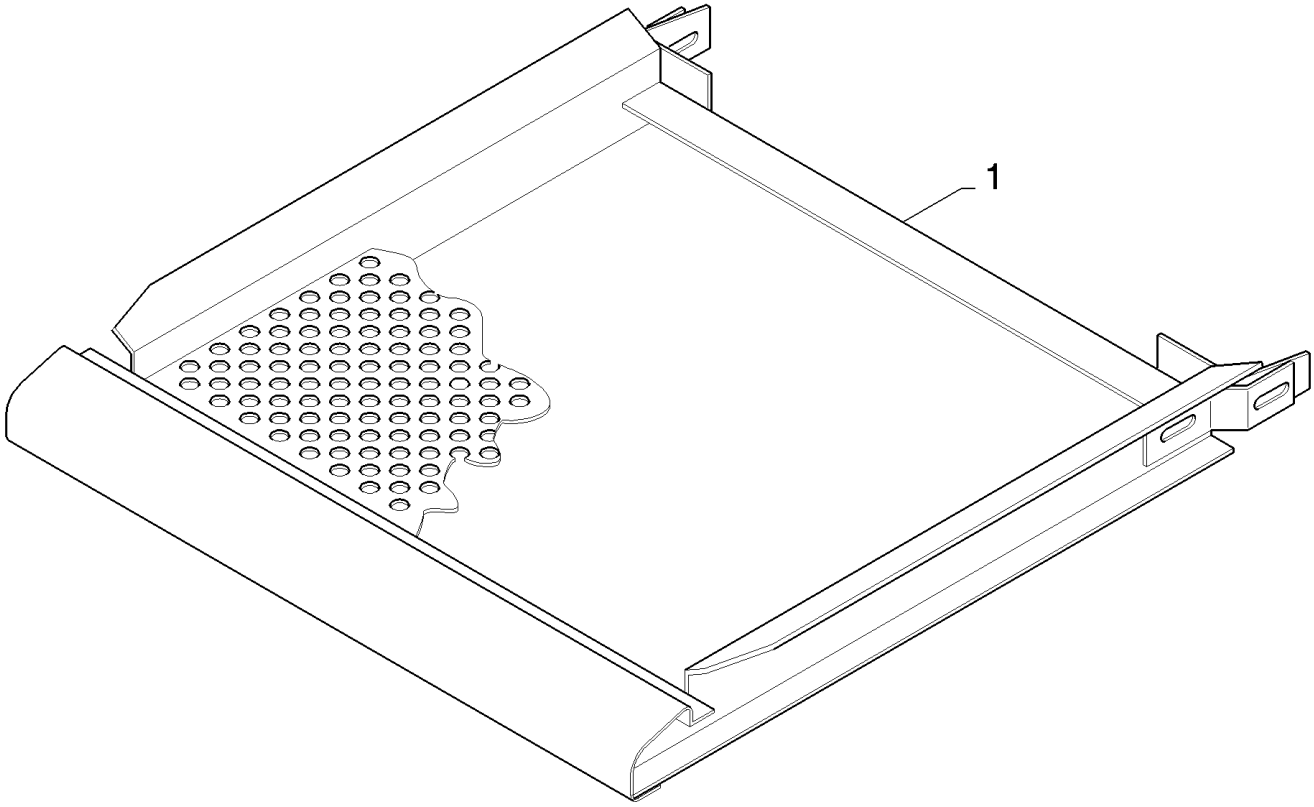

CSX7080 C659 - COMBINE (9/06-8/08)

15.213(A 01) INTERCHANGEABLE LOWER SIEVE, FRAME, BLANK-D=16MM,D=18MM

ссылка	Номер детали	Кол-во	Описание
1	390370	1	D=16MM
1	390371	1	D=18MM

CSX7080 C659 - COMBINE (9/06-8/08)

15.214(B 01) GRAIN PAN, REMOVABLE, STAINLESS STEEL

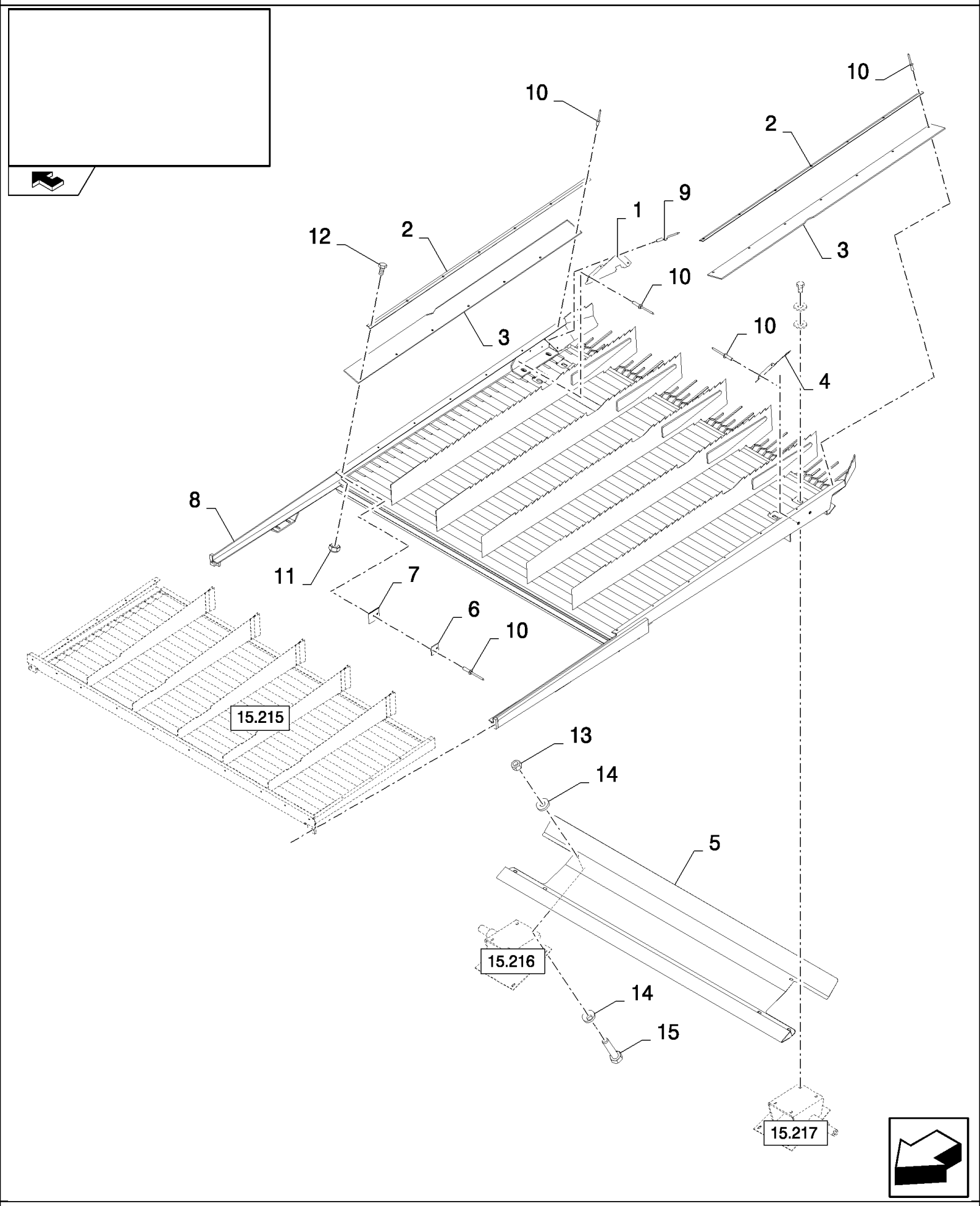

CSX7080 C659 - COMBINE (9/06-8/08)

15.214(B 01) GRAIN PAN, REMOVABLE, STAINLESS STEEL

ссылка	Номер детали	Кол-во	Описание
1	84459232	1	COVER, CAP, RH
2	84072565	2	PLATE, FIXING,
3	84462797	2	CANVAS,
4	84459233	1	COVER, CAP, LH
5	84462762	1	PLATE, SKID,
6	84073793	2	PLATE, FIXING,
7	84073720	2	CANVAS,
8	84462755	1	GRAIN PAN,
9	445394	4	RIVET, Pop, M4.8 x 12.7,
10	445395	20	RIVET, Pop, M4.8 x 18.1,
11	353308	1	NUT, M6 x 1, Cl 8,
12	120100	2	BOLT, Hex, M6 x 20, 8.8,
13	9706755	6	NUT, M6, Cl 8,
14	412649	12	WASHER, SPRING, Belleville, M6,
15	86508568	6	SCREW, Hex, M6 x 16, 8.8,

CSX7080 C659 - COMBINE (9/06-8/08)

15.215(B 01) GRAIN PAN, REMOVABLE, STAINLESS STEEL, 'SMART SIEVE'

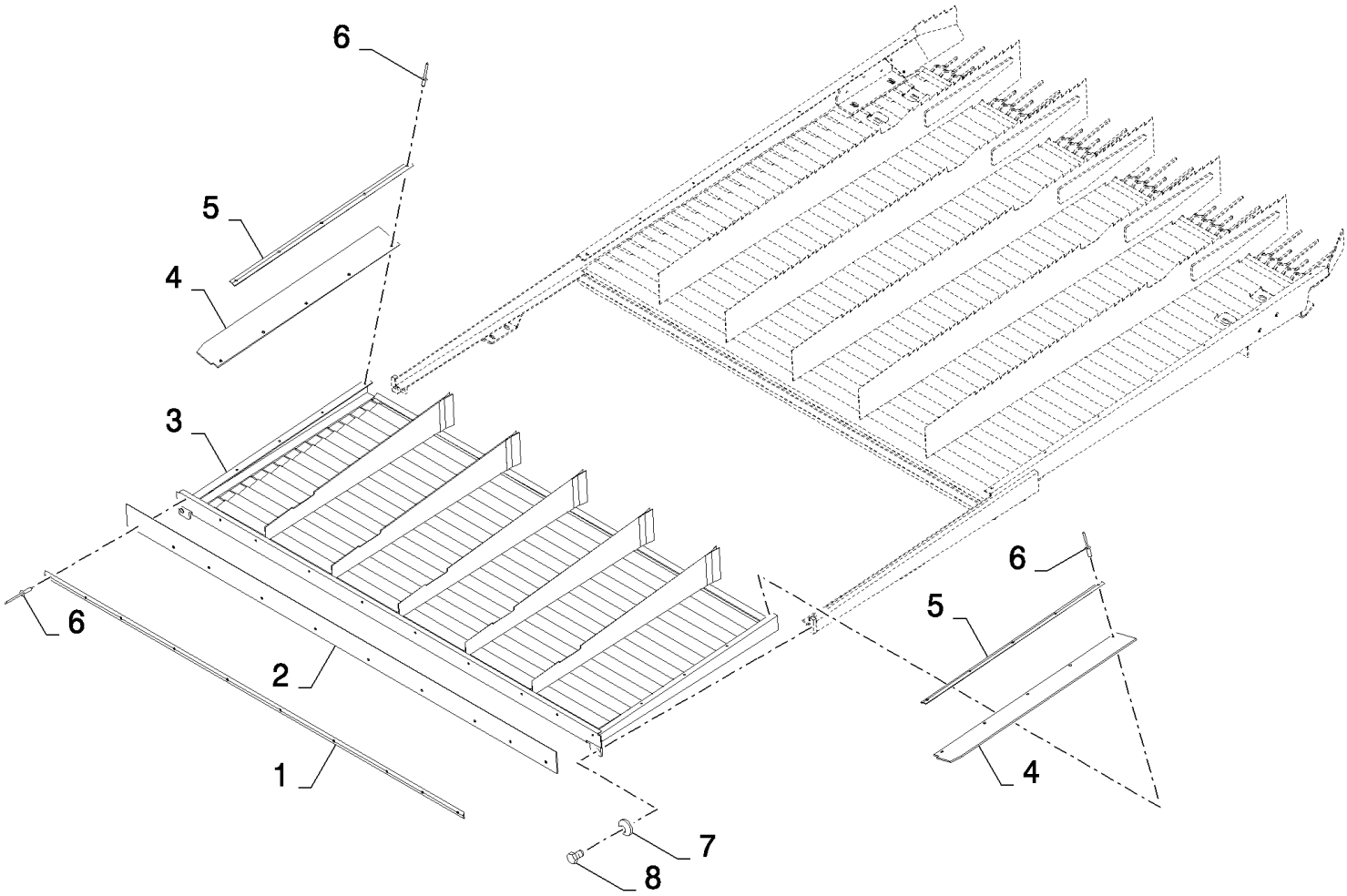

CSX7080 C659 - COMBINE (9/06-8/08)

15.215(B 01) GRAIN PAN, REMOVABLE, STAINLESS STEEL, 'SMART SIEVE'

ссылка	Номер детали	Кол-во	Описание
1	84072727	1	PLATE, FIXING,
2	84072359	1	CANVAS,
3	84462810	1	DEFLECTOR,
4	84072358	2	CANVAS,
5	84072726	2	PLATE, FIXING,
6	445395	20	RIVET, Pop, M4.8 x 18.1,
7	140045	2	WASHER, SPRING, Belleville, M10,
8	43140	2	BOLT, Hex, M10 x 30, 8.8, Full Thd,

15.216(A 01) SMART SIEVE

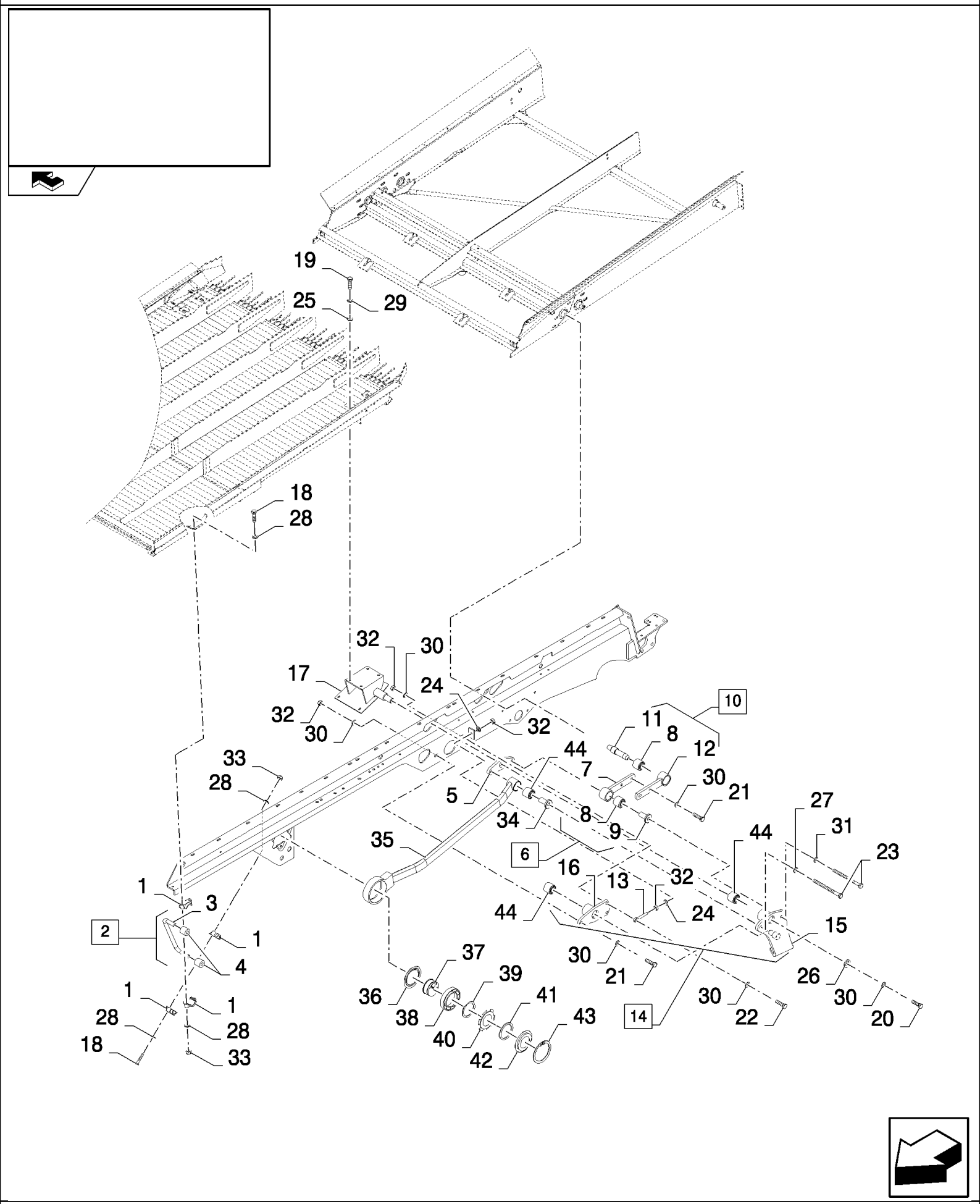

CSX7080 C659 - COMBINE (9/06-8/08)

15.216(A 01) SMART SIEVE

ссылка	Номер детали	Кол-во	Описание
1	320033	8	HOUSING,
2	84462892	2	LH and RH (3, 4)
3	9504173	1	SUPPORT,
4	84000052	2	BUSHING, RUBBER,
5	84459125	1	PLATE,
6	87372248	1	(7 to 9), BSN C547
6	84462905	1	(7 to 9), ASN D548
7	84460153	1	ARM, , BSN C547
7	84462722	1	ARM, , ASN D548
8	84459072	2	BUSHING, RUBBER, , BSN C547
8	84462954	2	BUSHING, RUBBER, , ASN D548
9	84459240	1	SHAFT, , BSN C547
9	87390319	1	SHAFT, , ASN D548
10	87372354	1	(8, 11, 12), BSN C547
10	84462907	1	(8, 11, 12), ASN D548
11	84462475	1	SHAFT, , BSN C547
11	84462973	1	SHAFT, , ASN D548
12	84460152	1	ARM, , BSN C547
12	84460849	1	ARM, , ASN D548
13	330413	1	BOLT, BANJO,
14	84462902	1	(15, 16, 44)
15	84462568	1	ARM,
16	84334522	1	HOUSING, BEARING,
17	84462761	1	SUPPORT, , BSN C547
17	87542454	1	SUPPORT, , ASN D548
18	120062	8	BOLT, Hex, M8 x 70, 8.8,
19	9706704	4	BOLT, Hex, M10 x 35, 8.8, Full Thd,
20	9706687	1	SCREW, Hex, M12 x 30, 8.8,
21	86629541	4	BOLT, Hex, M12 x 40, 8.8, Full Thd,
22	9706702	1	SCREW, Hex, M12 x 50, 8.8,
23	374889	2	BOLT, Hex, M16 x 100, 8.8,
24	140018	2	WASHER, M12 x 24 x 2.5,
25	140042	4	WASHER, M10 x 34 x 3,
26	86592701	1	WASHER, M12 x 35 x 5, HT,
27	86592702	1	WASHER, M16 x 45 x 6, HT,
28	322358	16	WASHER, SPRING, Belleville, M8,
29	140045	4	WASHER, SPRING, Belleville, M10,
30	140046	9	WASHER, Belleville, M12,
31	140048	1	WASHER, SPRING, Belleville, M16,
32	9706685	5	NUT, M12, Cl 8,
33	86629542	8	NUT, LOCK, M8 x 1.25, Cl 8,
34	84459240	1	SHAFT,
35	84458957	1	ARM,
36	9832772	1	RING,

CSX7080 C659 - COMBINE (9/06-8/08)

15.216(A 01) SMART SIEVE

ссылка	Номер детали	Кол-во	Описание
37	84458922	1	ECCENTRIC,
38	9833081	1	BEARING, BALL,
39	9832771	1	CIRCLIP,
40	9831118	1	FLANGE,
41	448736	1	SEALRING,
42	9832769	1	FLANGE,
43	370014	1	RING, SNAP, M130, Int,
44	84459072	3	BUSHING, RUBBER,

15.216(B 01) SMART SIEVE

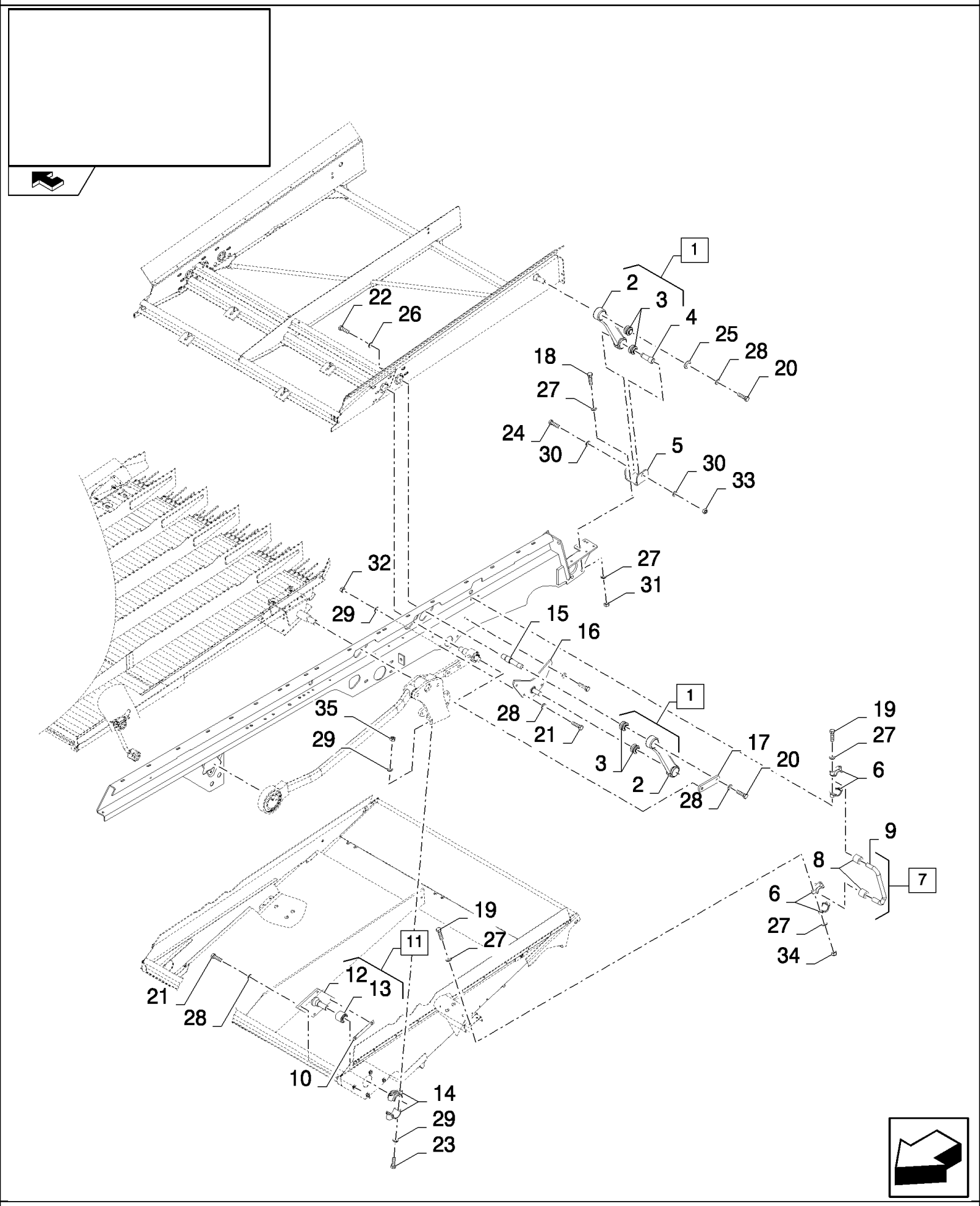

CSX7080 C659 - COMBINE (9/06-8/08)

15.216(B 01) SMART SIEVE

ссылка	Номер детали	Кол-во	Описание
1	84459085	3	PIVOTING ARM, (2, 3)
2	84459103	1	
3	84458695	2	
4	84459175	2	BUSHING,
5	84459137	2	BRACKET,
6	320033	8	HOUSING,
7	84462893	2	LH and RH (8, 9)
8	84000052	2	BUSHING, RUBBER,
9	84434759	1	SUPPORT,
10	84031772	1	SUPPORT,
11	84462899	1	(12, 13)
12	84439805	1	SUPPORT,
13	84459072	1	BUSHING, RUBBER,
14	84446877	2	HOUSING, BEARING,
15	84462973	1	SHAFT,
16	87399589	1	SUPPORT,
17	84462975	1	PLATE,
18	43127	8	BOLT, Hex, M8 x 25, 8.8,
19	120062	8	BOLT, Hex, M8 x 70, 8.8,
20	43138	4	SCREW, Hex, M10 x 20, 8.8, Full Thd,
21	43140	6	BOLT, Hex, M10 x 30, 8.8, Full Thd,
22	9706687	5	SCREW, Hex, M12 x 30, 8.8,
23	374887	2	SCREW, Hex, M12 x 100, 8.8,
24	321246	2	BOLT, Hex, M16 x 120, 8.8,
25	140042	2	WASHER, M10 x 34 x 3,
26	86592701	5	WASHER, M12 x 35 x 5, HT,
27	322358	28	WASHER, SPRING, Belleville, M8,
28	140045	12	WASHER, SPRING, Belleville, M10,
29	140046	4	WASHER, Belleville, M12,
30	140048	4	WASHER, SPRING, Belleville, M16,
31	9706690	8	NUT, M8, Cl 8,
32	100016	2	NUT, M10, Cl 8,
33	100020	2	NUT, M16, Cl 8,
34	86629542	4	NUT, LOCK, M8 x 1.25, Cl 8,
35	100038	2	NUT, M12 x 1.75, Cl 8,

15.217(A 01) SMART SIEVE

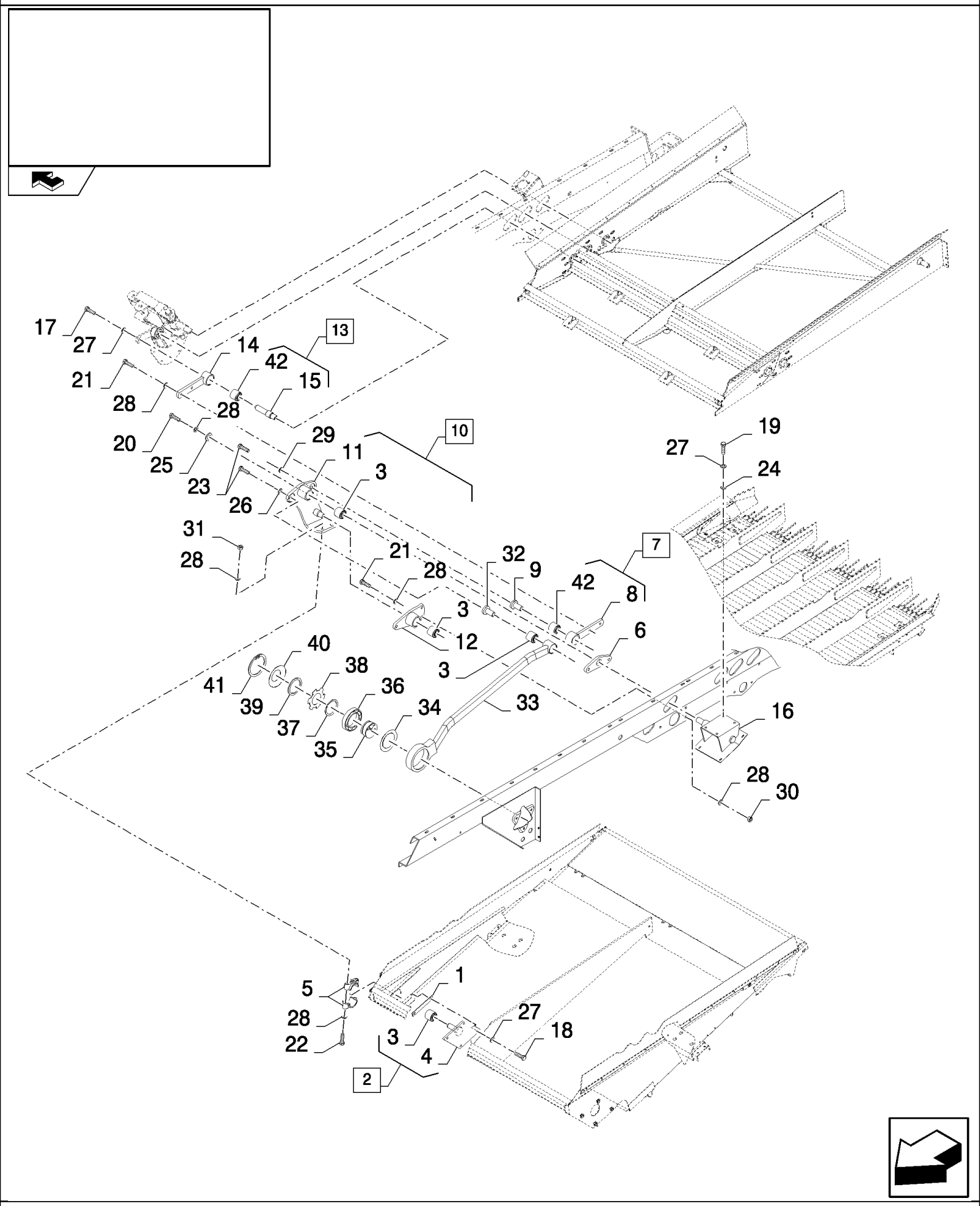

CSX7080 C659 - COMBINE (9/06-8/08)

15.217(A 01) SMART SIEVE

ссылка	Номер детали	Кол-во	Описание
1	84031772	1	SUPPORT,
2	84462901	1	(3, 4)
3	84459072	4	BUSHING, RUBBER,
4	84439817	1	SUPPORT,
5	84446877	2	HOUSING, BEARING,
6	84459125	1	PLATE,
7	87372248	1	(8, 9, 42), BSN C547
7	84462905	1	(8, 9, 42), ASN D548
8	84460153	1	ARM, , BSN C547
8	84462722	1	ARM, , ASN D548
9	84459240	1	SHAFT, , BSN C547
9	87390319	1	SHAFT, , ASN D548
10	84462904	1	(3, 11, 12)
11	84462567	1	ARM,
12	84334522	1	HOUSING, BEARING,
13	87372359	1	(14, 15, 42), BSN C547
13	84462908	1	(14, 15, 42), ASN D548
14	84462999	1	ARM, , BSN C547
14	84460854	1	ARM, , ASN D548
15	84462475	1	SHAFT, , BSN C547
15	84462963	1	, ASN D548
16	84462763	1	SUPPORT, , BSN C547
16	87542455	1	SUPPORT, , ASN D548
17	43138	1	SCREW, Hex, M10 x 20, 8.8, Full Thd,
18	43140	2	BOLT, Hex, M10 x 30, 8.8, Full Thd,
19	9706704	4	BOLT, Hex, M10 x 35, 8.8, Full Thd,
20	9706687	1	SCREW, Hex, M12 x 30, 8.8,
21	86629541	5	BOLT, Hex, M12 x 40, 8.8, Full Thd,
22	374887	2	SCREW, Hex, M12 x 100, 8.8,
23	374889	2	BOLT, Hex, M16 x 100, 8.8,
24	140042	4	WASHER, M10 x 34 x 3,
25	86592701	1	WASHER, M12 x 35 x 5, HT,
26	86592702	1	WASHER, M16 x 45 x 6, HT,
27	140045	7	WASHER, SPRING, Belleville, M10,
28	140046	13	WASHER, Belleville, M12,
29	140048	1	WASHER, SPRING, Belleville, M16,
30	9706685	3	NUT, M12, Cl 8,
31	100038	2	NUT, M12 x 1.75, Cl 8,
32	84459240	1	SHAFT,
33	84460034	1	ARM,
34	9832772	1	RING,
35	84458922	1	ECCENTRIC,
36	9833081	1	BEARING, BALL,
37	9832771	1	CIRCLIP,

CSX7080 C659 - COMBINE (9/06-8/08)

15.217(A 01) SMART SIEVE

ссылка	Номер детали	Кол-во	Описание
38	9831118	1	FLANGE,
39	448736	1	SEALRING,
40	9832769	1	FLANGE,
41	370014	1	RING, SNAP, M130, Int,
42	84459072	2	BUSHING, RUBBER, , BSN C547
42	84462954	2	BUSHING, RUBBER, , ASN D548

15.217(B 01) SMART SIEVE

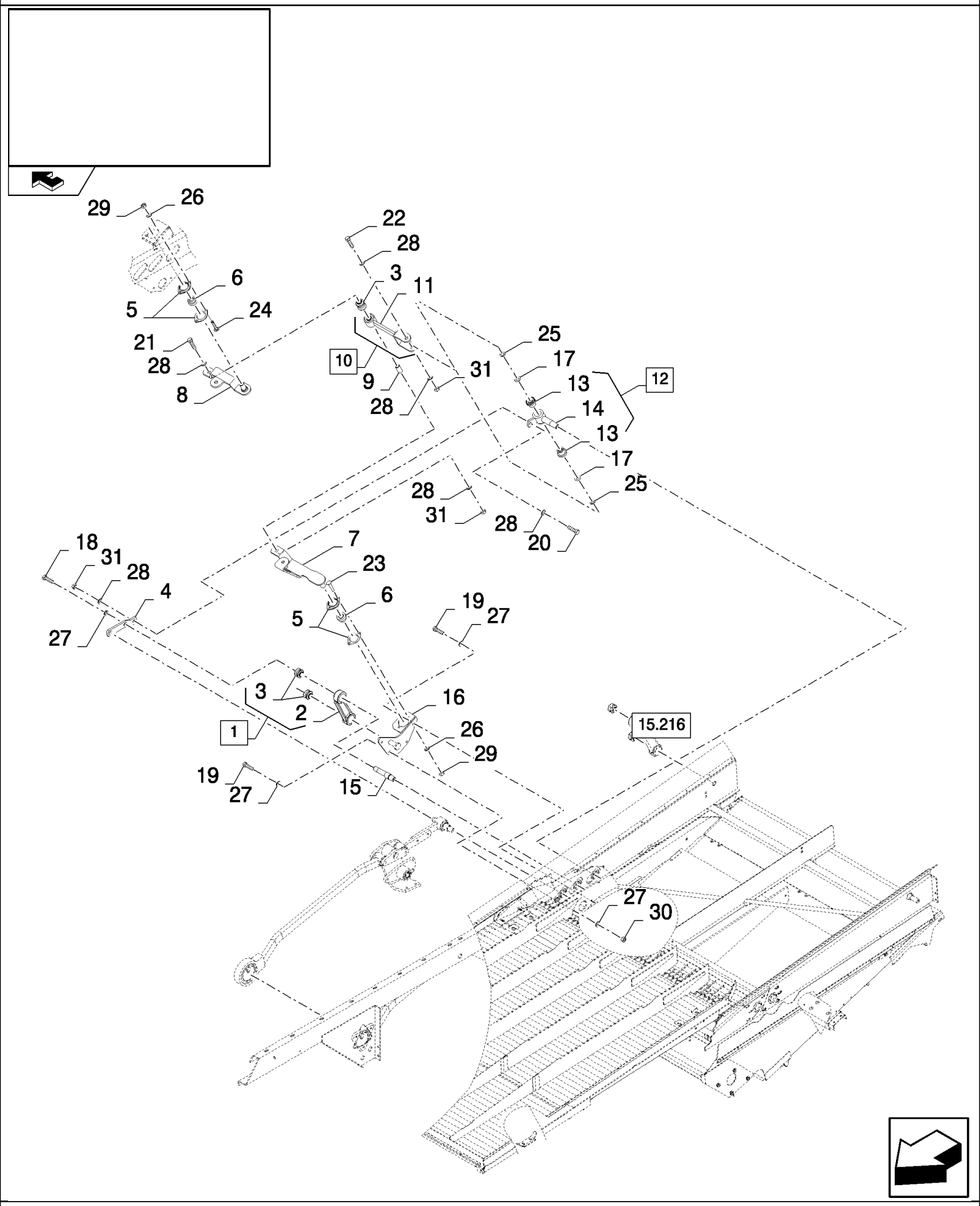

CSX7080 C659 - COMBINE (9/06-8/08)

15.217(B 01) SMART SIEVE

ссылка	Номер детали	Кол-во	Описание
1	84459085	1	PIVOTING ARM, (2, 3)
2	84459103	1	
3	84458695	3	
4	84462974	1	PLATE,
5	86548974	4	FLANGE,
6	325103	2	BEARING, BALL,
7	84462586	1	BRACKET,
8	84462862	1	BRACKET,
9	87387367	1	BUSHING,
10	84459262	1	TIE-ROD, (3, 11)
11	84462947	1	
12	84462894	1	BUSHING, (13, 14)
13	8445869	2	
14	84459037	1	
15	84462973	1	SHAFT,
16	87399587	1	SUPPORT,
17	9513615	4	WASHER,
18	43138	1	SCREW, Hex, M10 x 20, 8.8, Full Thd,
19	43140	5	BOLT, Hex, M10 x 30, 8.8, Full Thd,
20	43168	1	BOLT, Hex, M16 x 40, 8.8,
21	374889	1	BOLT, Hex, M16 x 100, 8.8,
22	321246	1	BOLT, Hex, M16 x 120, 8.8,
23	86507486	2	BOLT, CARRIAGE, Short NK, M8 x 20, Cl8.8, Full Thd,
24	308761	2	BOLT, CARRIAGE, Short NK, M8 x 25, Cl8.8, Full Thd,
25	140020	2	WASHER, M16 x 30 x 3,
26	322358	4	WASHER, SPRING, Belleville, M8,
27	140045	8	WASHER, SPRING, Belleville, M10,
28	140048	5	WASHER, SPRING, Belleville, M16,
29	9706690	4	NUT, M8, Cl 8,
30	100016	2	NUT, M10, Cl 8,
31	100020	3	NUT, M16, Cl 8,

15.218(A 01) SMART SIEVE

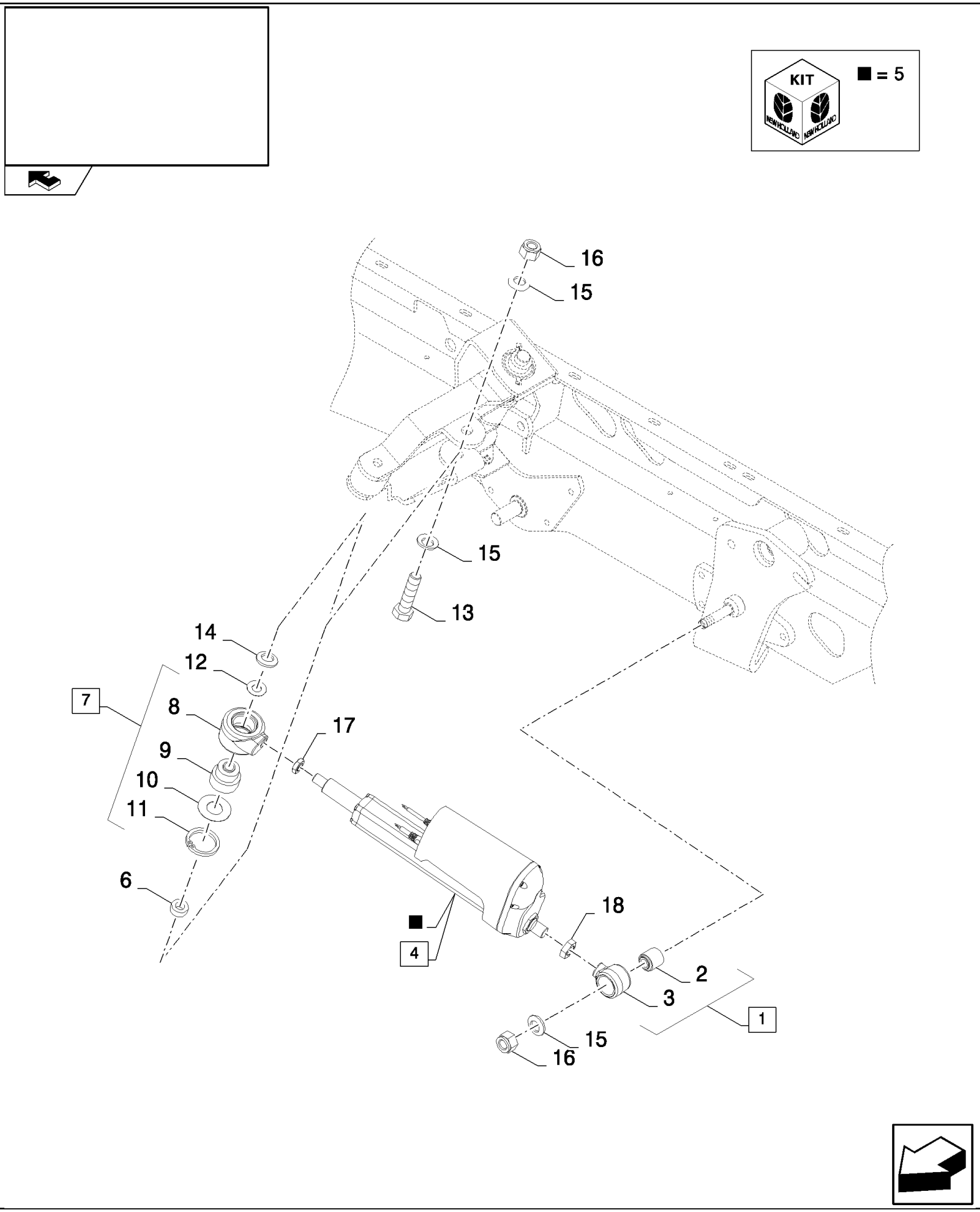

CSX7080 C659 - COMBINE (9/06-8/08)

15.218(A 01) SMART SIEVE

ссылка	Номер детали	Кол-во	Описание
1	87390326	1	COUPLING JOINT, (2, 3)
2	84462444	1	BUSHING, RUBBER,
3	NSS	1	NOT SERVICED SEPARATELY,
4	84462879	1	ACTUATOR, (5), BSN C543
4	84462576	1	ACTUATOR, , ASN D544
5	87387350	1	, BSN C543
5	87606715	1	, ASN D544
6	84462795	1	BUSHING,
7	84462911	1	PAD, RUBBER, (8 to 11)
8	87329579	1	
9	84458696	1	
10	84462890	1	
11	86536801	1	RING, SNAP, M55, Int,
12	9513615	1	WASHER,
13	350616	1	SCREW, Hex, M16 x 90, 8.8,
14	140020	1	WASHER, M16 x 30 x 3,
15	140048	3	WASHER, SPRING, Belleville, M16,
16	100020	2	NUT, M16, Cl 8,
17	364164	1	NUT, Thin, M16 x 1.5, Cl 04,
18	320771	1	NUT, Thin, M20 x 1.5, Cl 04,

15.219(01) SHAKER SHOE DRIVE

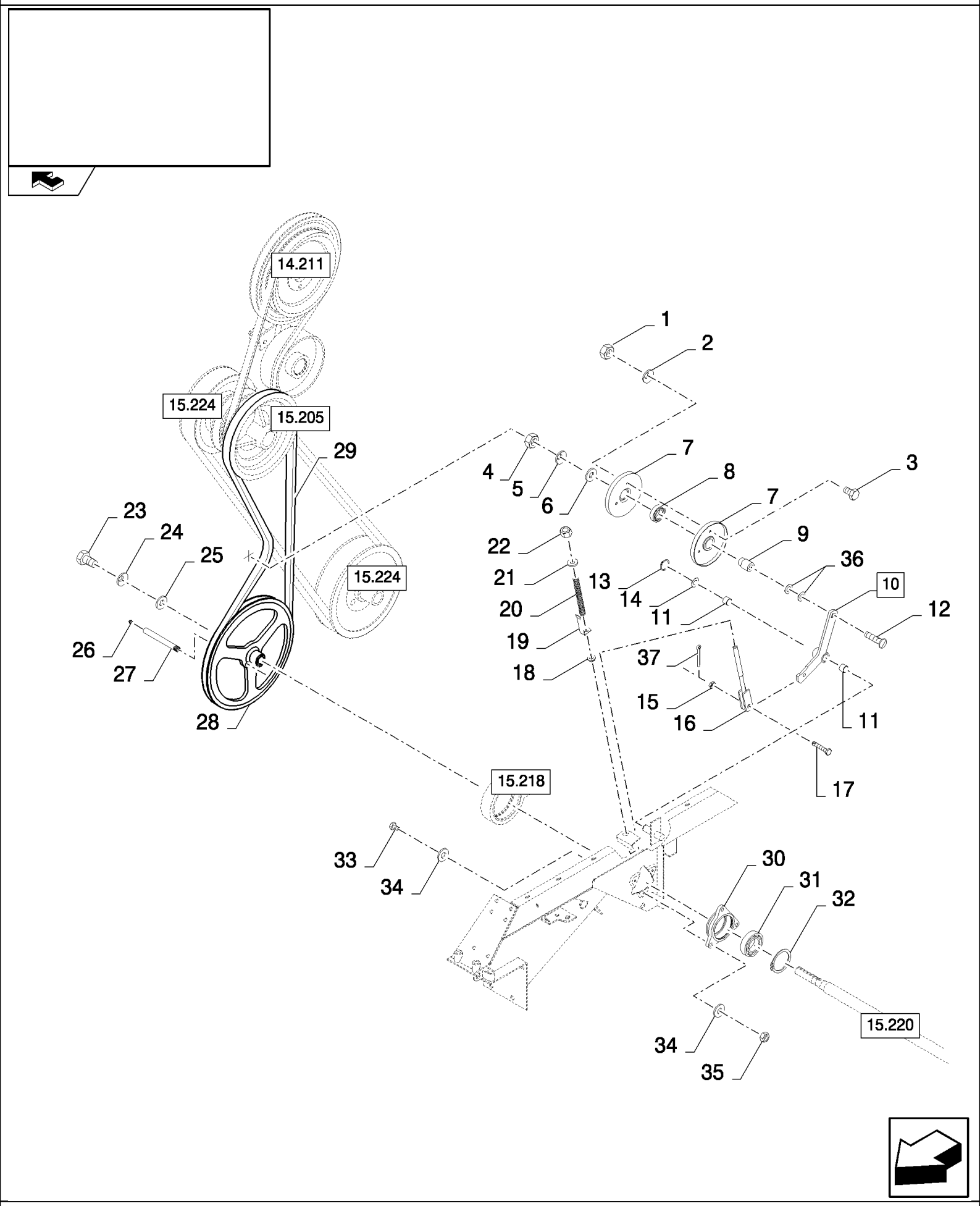

CSX7080 C659 - COMBINE (9/06-8/08)

15.219(01) SHAKER SHOE DRIVE

ссылка	Номер детали	Кол-во	Описание
1	9706690	3	NUT, M8, Cl 8,
2	322358	3	WASHER, SPRING, Belleville, M8,
3	120103	3	BOLT, Hex, M8 x 16, 8.8,
4	100020	1	NUT, M16, Cl 8,
5	140048	1	WASHER, SPRING, Belleville, M16,
6	378246	1	WASHER, 16MM
7	84334051	2	HALF-PULLEY,
8	443898	1	BEARING, BALL,
9	395278	1	RING,
10	84444152	1	LEVER, (11)
11	84057311	2	SLEEVE,
12	120048	1	BOLT, CARRIAGE, Short NK, M16 x 80, Cl8.8,
13	370002	1	RING, SNAP, M25, Ext,
14	140103	1	WASHER, 26MM
15	140016	1	WASHER, M8 x 16 x 1.6,
16	84443958	1	ROD,
17	335040	1	PIN, CLEVIS, M8 x 28,
18	439857	1	BUSHING,
19	84057943	1	INDICATOR,
20	337829	1	SPRING,
21	378245	1	WASHER, M12,
22	412126	1	NUT, LOCK, M12 x 1.75, Cl 8,
23	300388	1	SCREW, Hex, M12 x 25, 8.8,
24	140046	1	WASHER, Belleville, M12,
25	395606	1	WASHER, 12MM
26	321204	1	NIPPLE, LUBE, M6 x 1, 16mm lg,
27	9818440	1	TUBE,
28	84077988	1	PULLEY,
29	84817635	1	BELT, TRANSMISSION,
30	387566	1	HOUSING,
31	320557	1	BEARING ASSY,
32	300633	1	RING, SNAP, M80, Int,
33	9706704	3	BOLT, Hex, M10 x 35, 8.8, Full Thd,
34	394629	6	WASHER, LOCK, 10MM
35	100037	3	NUT, M10 x 1.5, Cl 8,
36	140090	2	WASHER, 17MM
37	9512667	1	PIN, SPLIT (COTTER), M2 x 20,

15.220(A 01) SHAKER SHOE DRIVE

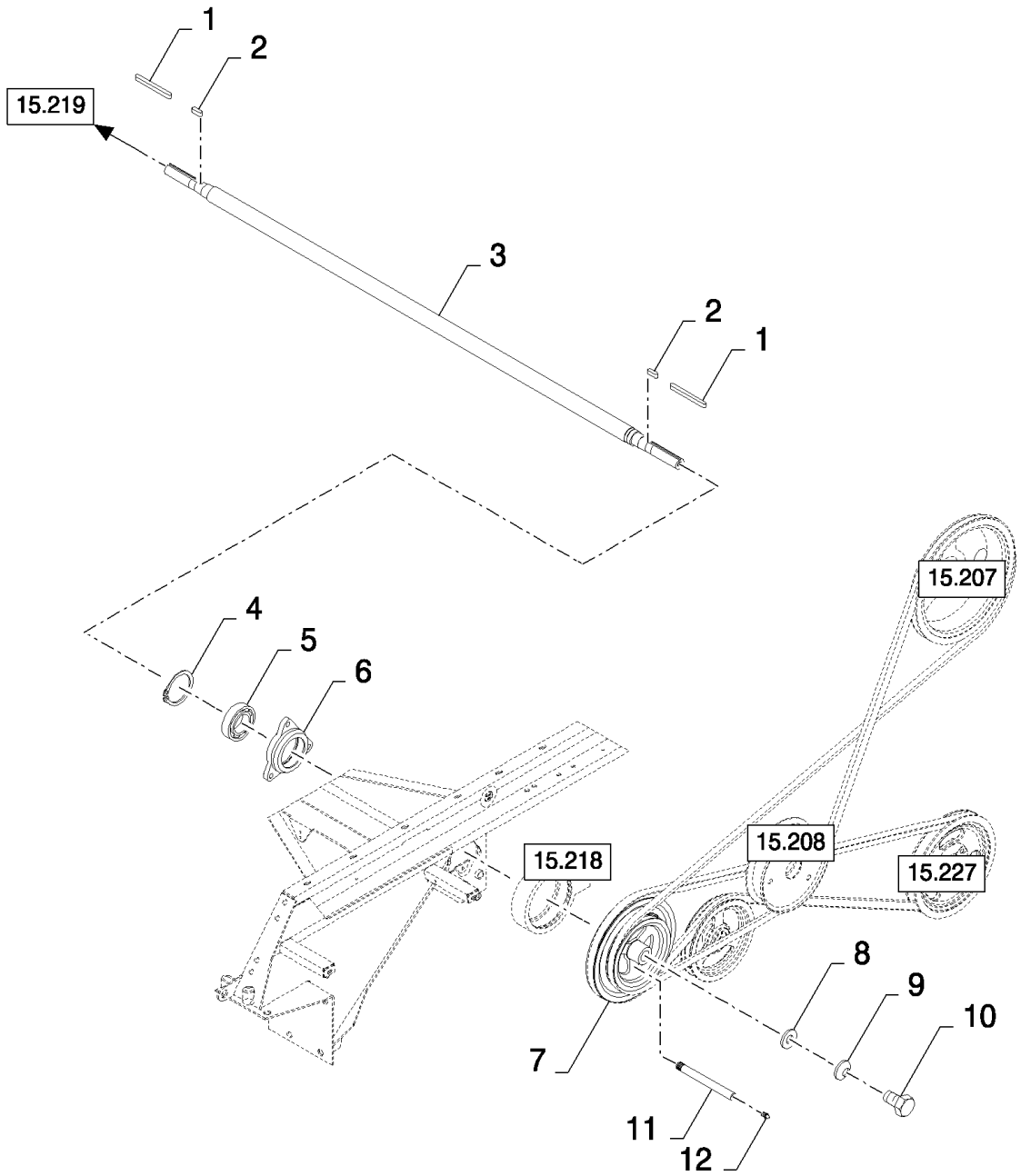

CSX7080 C659 - COMBINE (9/06-8/08)

15.220(A 01) SHAKER SHOE DRIVE

ссылка	Номер детали	Кол-во	Описание
1	170035	2	KEY,
2	170030	2	KEY, M8 x 7 x 32, Par,
3	84077978	1	SHAFT,
4	300633	1	RING, SNAP, M80, Int,
5	320557	1	BEARING ASSY,
6	80387566	1	HOUSING,
7	87382302	1	PULLEY,
8	80395606	1	WASHER, 12MM
9	140046	1	WASHER, Belleville, M12,
10	300388	1	SCREW, Hex, M12 x 25, 8.8,
11	9818440	1	TUBE,
12	321204	1	NIPPLE, LUBE, M6 x 1, 16mm lg,

15.221(01) EXTENDED DIVIDERS

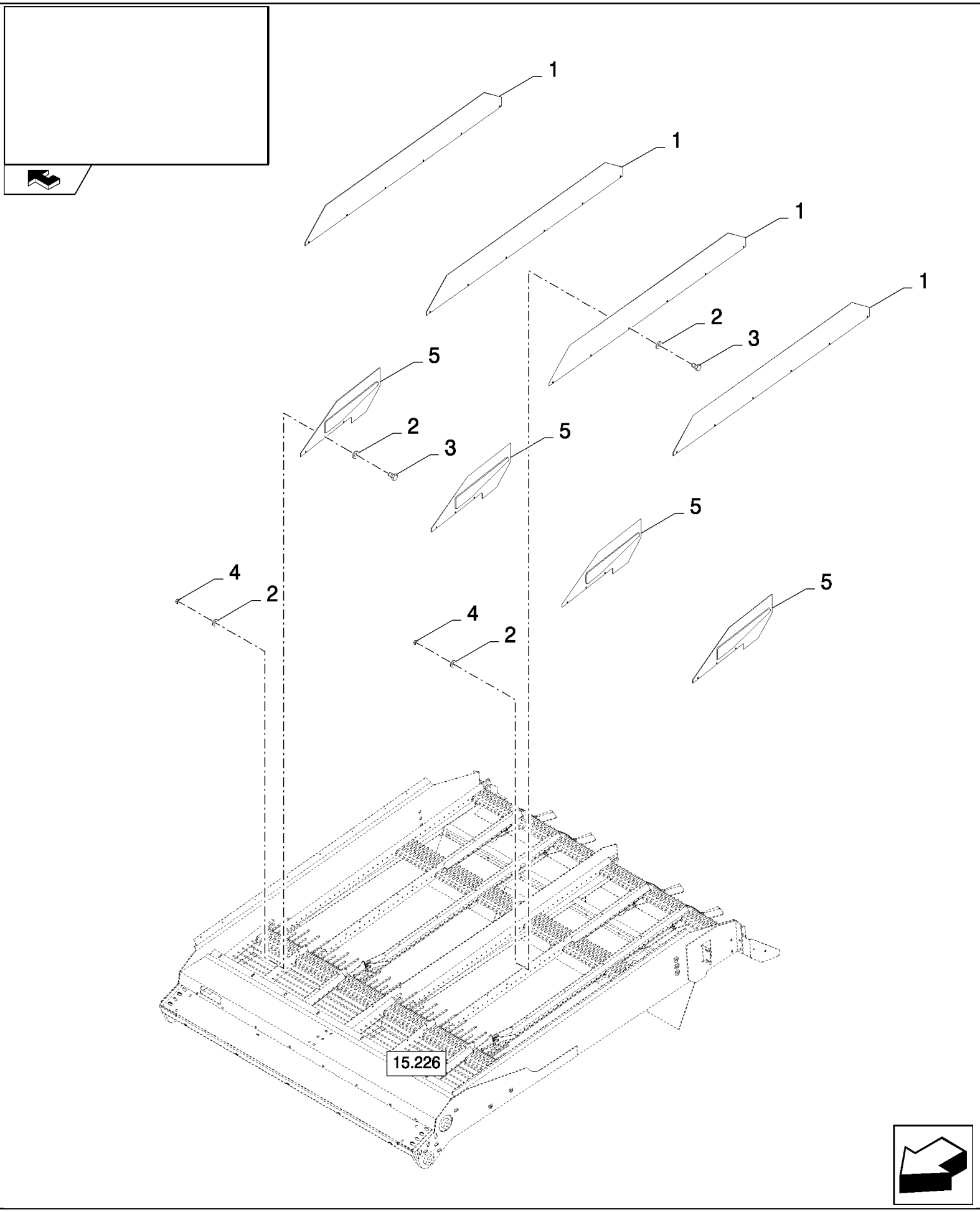

CSX7080 C659 - COMBINE (9/06-8/08)

15.221(01) EXTENDED DIVIDERS

ссылка	Номер детали	Кол-во	Описание
1	84442490	4	DEFLECTOR,
2	322356	72	WASHER, 5MM
3	300806	36	SCREW, Hex, M5 x 10, 8.8, Full Thd,
4	86508813	36	NUT, M5, Cl 8,
5	84442195	4	DEFLECTOR,

15.223(01) FAN VARI-DRIVE

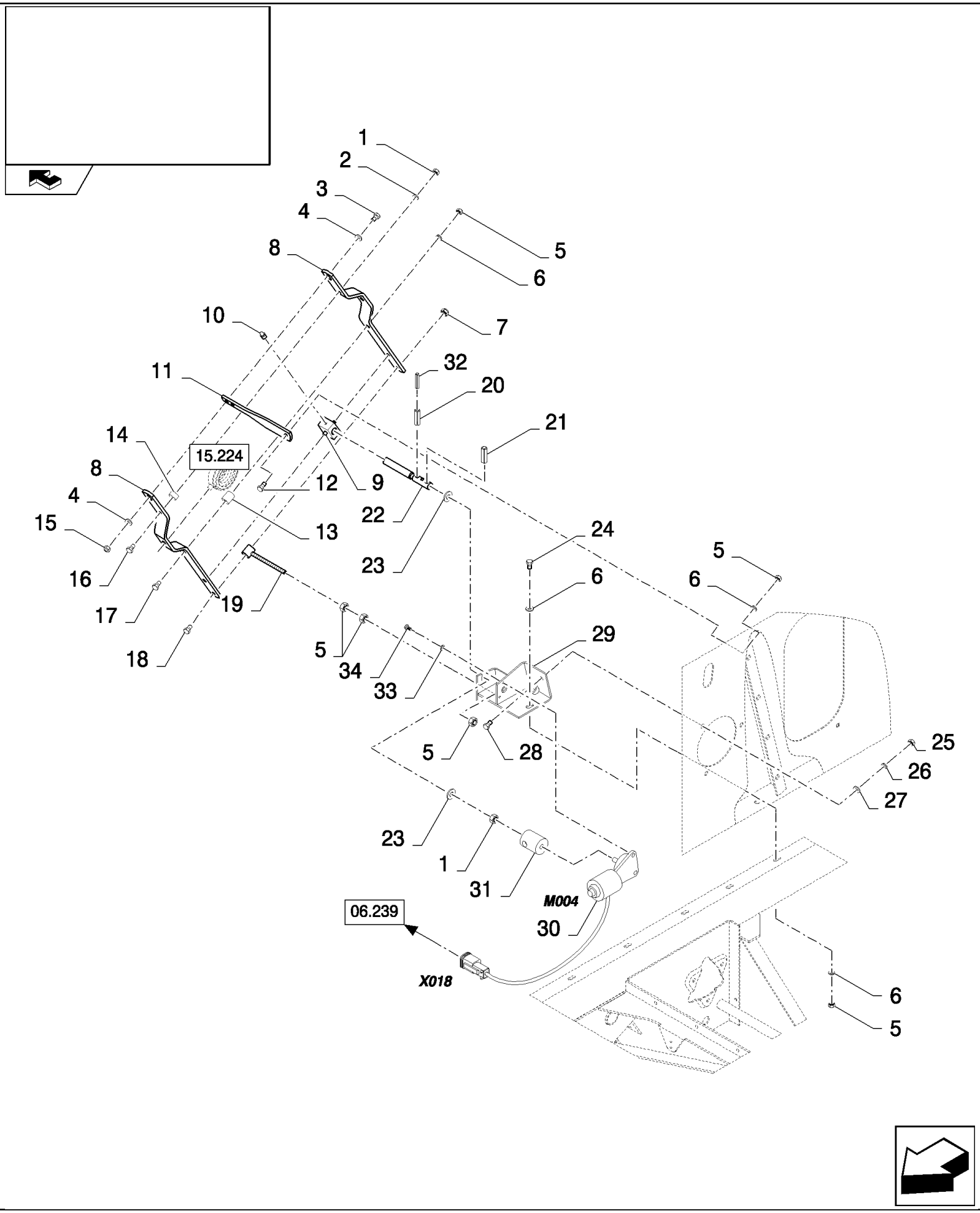

CSX7080 C659 - COMBINE (9/06-8/08)

15.223(01) FAN VARI-DRIVE

ссылка	Номер детали	Кол-во	Описание
1	9706690	2	NUT, M8, Cl 8,
2	322358	1	WASHER, SPRING, Belleville, M8,
3	120069	1	SCREW, Hex, M10 x 50, 8.8,
4	378244	2	WASHER, M10,
5	100016	7	NUT, M10, Cl 8,
6	140045	4	WASHER, SPRING, Belleville, M10,
7	86629542	1	NUT, LOCK, M8 x 1.25, Cl 8,
8	84076709	2	ARM,
9	84453114	1	ADJUSTER,
10	323713	1	NIPPLE, LUBE, 6MM
11	84076718	1	ARM,
12	43140	1	BOLT, Hex, M10 x 30, 8.8, Full Thd,
13	84439930	1	BUSHING,
14	334055	1	SPACER,
15	100037	1	NUT, M10 x 1.5, Cl 8,
16	43129	1	BOLT, Hex, M8 x 40, 8.8,
17	412217	1	BOLT, Hex, M10 x 55, 8.8, M10x55
18	43130	1	BOLT, Hex, M8 x 50, 8.8,
19	84076788	1	ROD,
20	86548577	2	PIN, M8 x 40, Slotted,
21	300872	1	PIN, LOCK, M8 x 36, Slotted,
22	87368039	1	SHAFT,
23	86592703	2	WASHER, M20 x 50 x 6, HT,
24	9706704	1	BOLT, Hex, M10 x 35, 8.8, Full Thd,
25	9706685	1	NUT, M12, Cl 8,
26	140046	1	WASHER, Belleville, M12,
27	378245	1	WASHER, M12,
28	9706687	1	SCREW, Hex, M12 x 30, 8.8,
29	87331052	1	MOUNT, ENGINE,
30	86579537	1	MOTOR, ELECTRIC,
31	89831501	1	BUSHING,
32	86977792	2	PIN, SPLIT (COTTER), M5 x 40, Slotted,
33	322357	3	WASHER, SPRING, Belleville, M6,
34	86508568	3	SCREW, Hex, M6 x 16, 8.8,

15.224(01) FAN VARI-DRIVE

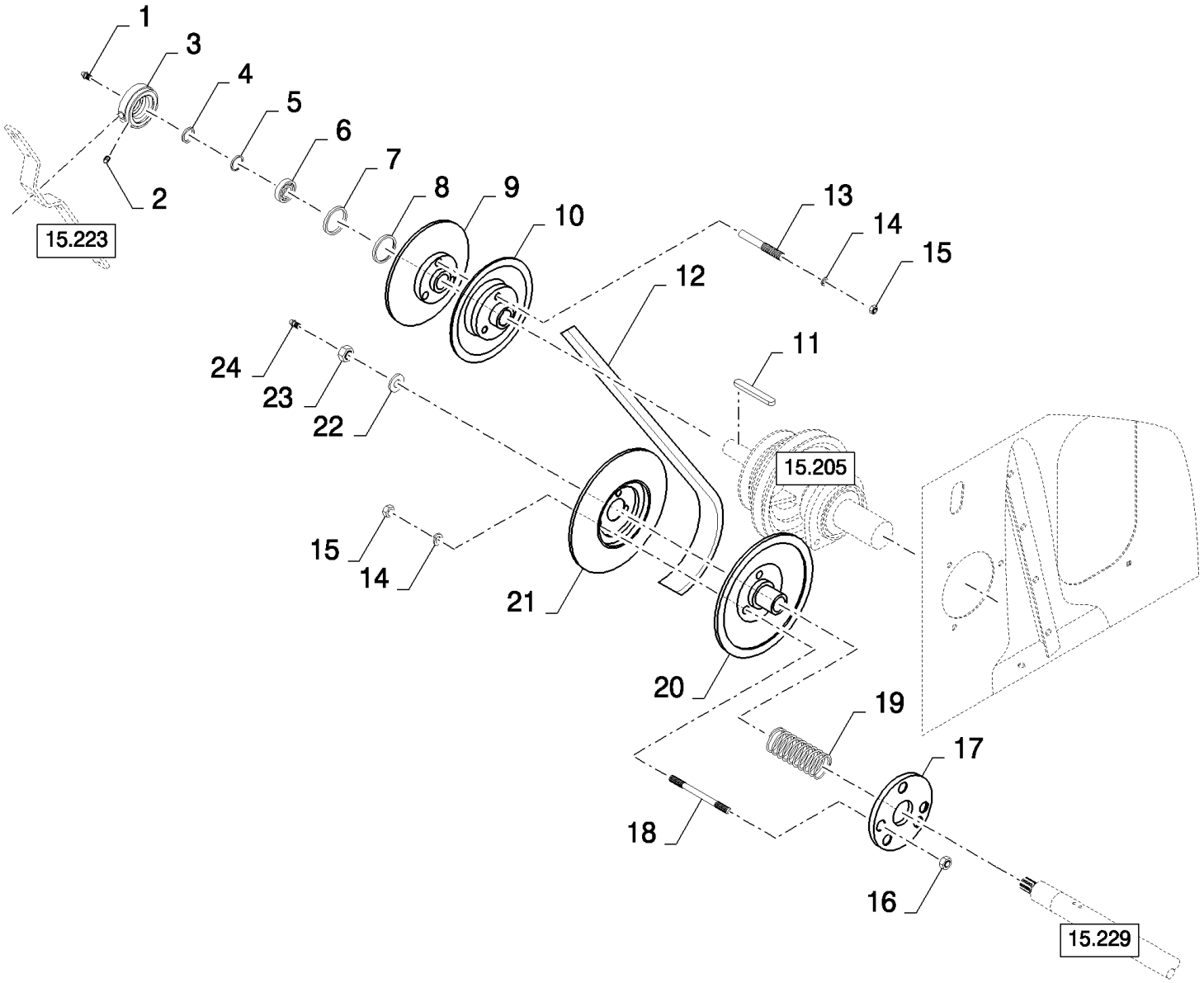

CSX7080 C659 - COMBINE (9/06-8/08)

15.224(01) FAN VARI-DRIVE

ссылка	Номер детали	Кол-во	Описание
1	332038	1	NIPPLE, LUBE,
2	332040	1	NIPPLE, LUBE, 90є, 1/8" NPT x .84" lg,
3	84807862	1	HOUSING, BEARING,
4	220010	1	ELEMENT, SEALING,
5	320397	1	RETAINER,
6	210054	1	BEARING ASSY,
7	309088	1	ELEMENT, SEALING,
8	320399	1	CIRCLIP,
9	84334068	1	PULLEY,
10	84334100	1	PULLEY,
11	354775	1	KEY,
12	84073979	1	BELT, TRANSMISSION,
13	110055	3	STUD,
14	140048	6	WASHER, SPRING, Belleville, M16,
15	100020	6	NUT, M16, Cl 8,
16	86000441	3	NUT, M16 x 2, Cl 8,
17	84437593	1	RING,
18	350617	3	STUD,
19	334054	1	SPRING,
20	84334072	1	PULLEY,
21	84334092	1	PULLEY,
22	86592703	1	WASHER, M20 x 50 x 6, HT,
23	100085	1	NUT, M20 x 1.5, Cl 8,
24	321204	1	NIPPLE, LUBE, M6 x 1, 16mm lg,

15.225(B 01) LOWER CLEANING SHOE, SELF LEVELLING, 'SMART SIEVE'

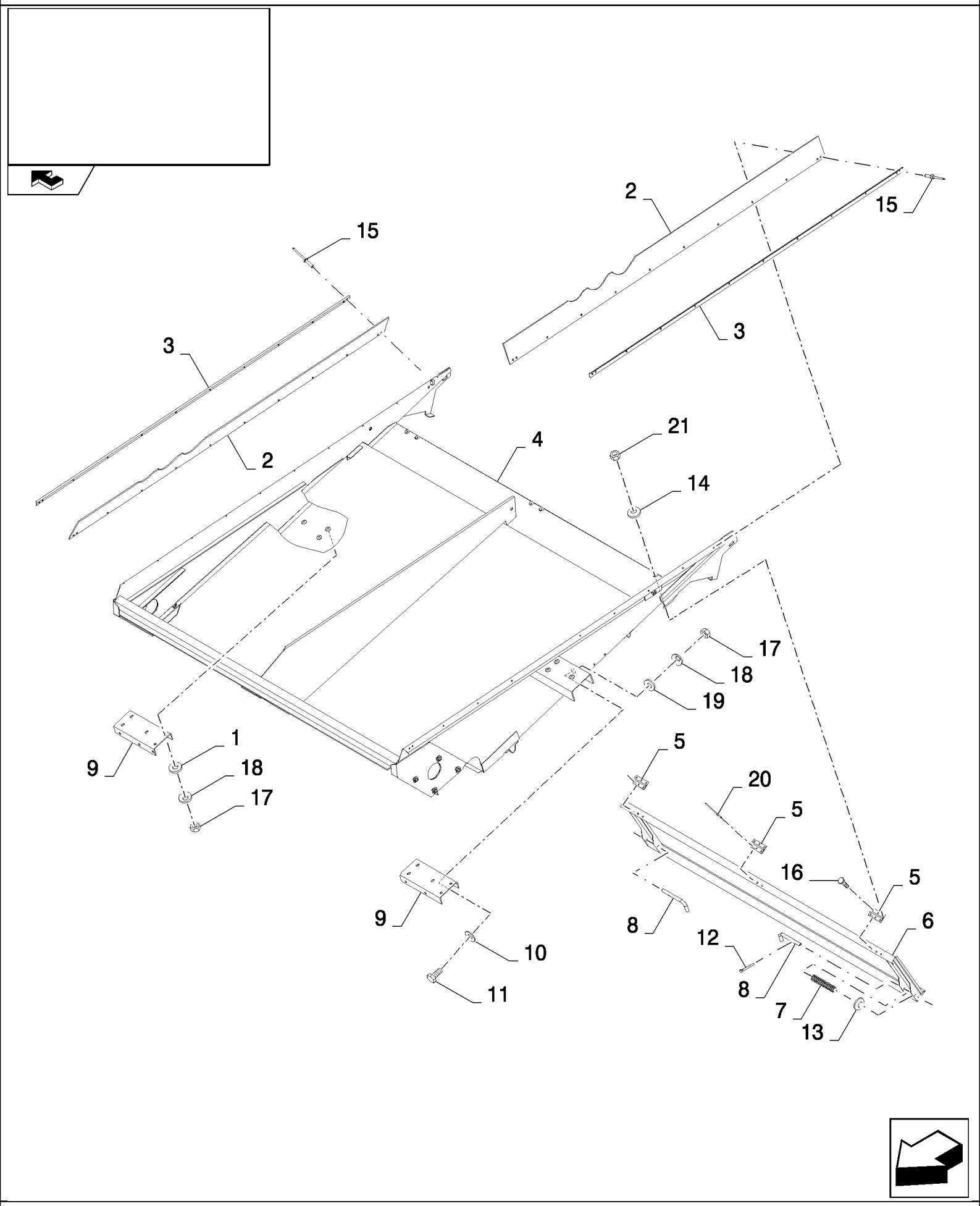

CSX7080 C659 - COMBINE (9/06-8/08)

15.225(B 01) LOWER CLEANING SHOE, SELF LEVELLING, 'SMART SIEVE'

ссылка	Номер детали	Кол-во	Описание
1	394628	6	WASHER,
2	84459910	2	CANVAS,
3	84459401	2	PLATE, FIXING,
4	84459394	1	SHOE, SHAKER,
5	350083	3	HINGE,
6	84434351	1	COVER,
7	84814911	2	SPRING,
8	394549	2	HANDLE,
9	84434757	2	SUPPORT,
10	86511315	4	WASHER, M8 x 16 x 1.6,
11	43127	4	BOLT, Hex, M8 x 25, 8.8,
12	130003	2	PIN, SPLIT (COTTER), M3.2 x 20,
13	140223	2	WASHER,
14	322356	6	WASHER,
15	84462757	26	RIVET,
16	300806	6	SCREW, Hex, M5 x 10, 8.8, Full Thd,
17	9706690	10	NUT, M8, Cl 8,
18	322358	10	WASHER, SPRING, Belleville, M8,
19	140041	4	WASHER, M8 x 28 x 3,
20	445394	9	RIVET, Pop, M4.8 x 12.7,
21	86508813	6	NUT, M5, Cl 8,

CSX7080 C659 - COMBINE (9/06-8/08)

15.225(C 01) LOWER CLEANING SHOE, FIXED SHOE

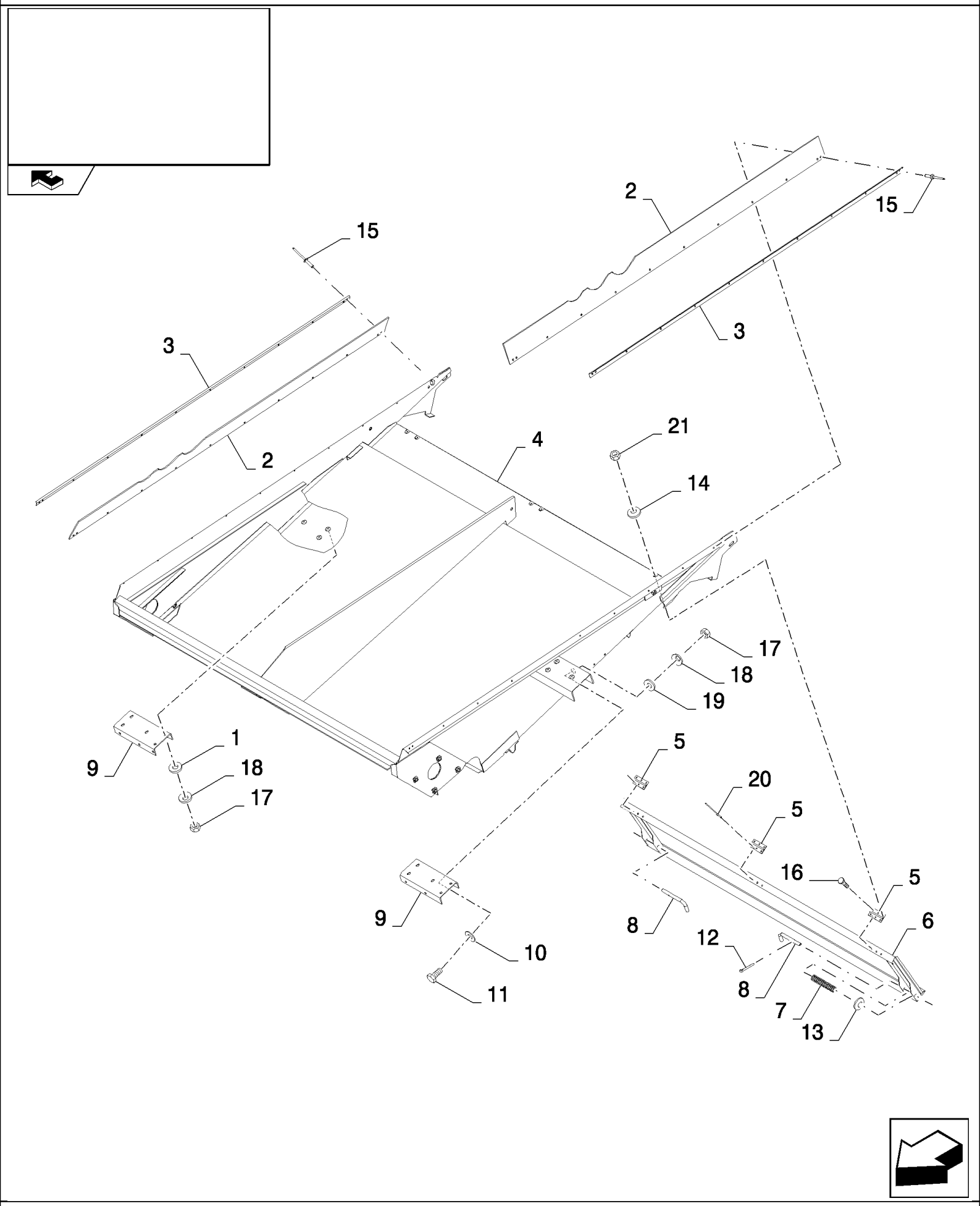

CSX7080 C659 - COMBINE (9/06-8/08)

15.225(C 01) LOWER CLEANING SHOE, FIXED SHOE

ссылка	Номер детали	Кол-во	Описание
1	394628	6	WASHER,
2	87531511	2	CANVAS,
3	84459401	2	PLATE, FIXING,
4	84462544	1	SHOE, SHAKER, , FOR CSX7060 ONLY
4	84459394	1	SHOE, SHAKER, , FOR CSX7080 ONLY
5	350083	3	HINGE,
6	84432760	1	COVER, , FOR CSX7060 ONLY
6	84434351	1	COVER, , FOR CSX7080 ONLY
7	84814911	2	SPRING,
8	394549	2	HANDLE,
9	84434757	2	SUPPORT,
10	86511315	4	WASHER, M8 x 16 x 1.6,
11	43127	4	BOLT, Hex, M8 x 25, 8.8,
12	130003	2	PIN, SPLIT (COTTER), M3.2 x 20,
13	140223	2	WASHER,
14	322356	6	WASHER,
15	84462757	26	RIVET,
16	300806	6	SCREW, Hex, M5 x 10, 8.8, Full Thd,
17	9706690	10	NUT, M8, Cl 8,
18	322358	10	WASHER, SPRING, Belleville, M8,
19	140041	4	WASHER, M8 x 28 x 3,
20	445394	9	RIVET, Pop, M4.8 x 12.7,
21	86508813	6	NUT, M5, Cl 8,

15.226(A 01) SIEVES

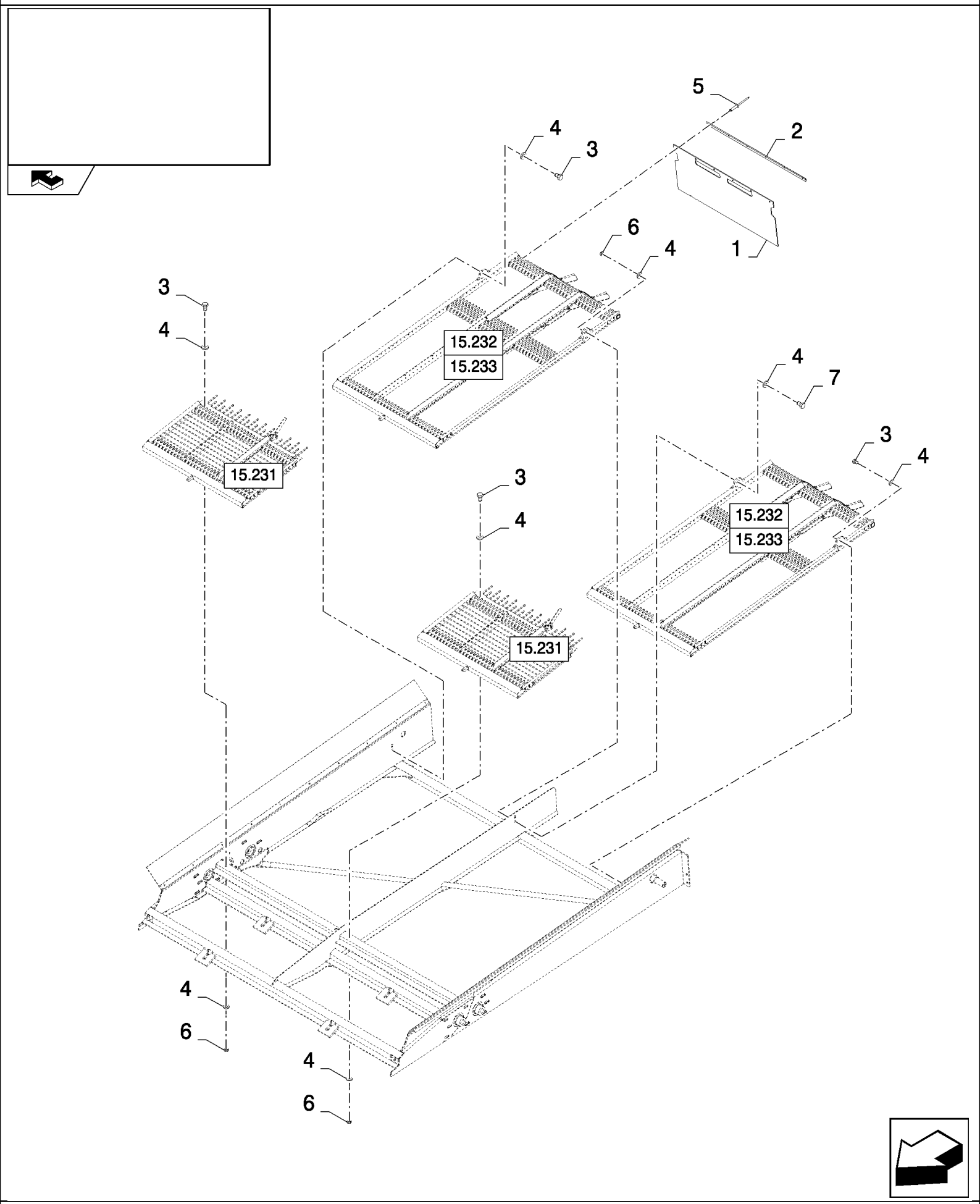

CSX7080 C659 - COMBINE (9/06-8/08)

15.226(A 01) SIEVES

ссылка	Номер детали	Кол-во	Описание
1	84459120	2	, FOR SIEVE 1 1/8" ONLY
1	84462961	2	CANVAS, , FOR SIEVE 1 5/8" ONLY
2	84459122	2	PLATE, FIXING,
3	43139	6	SCREW, Hex, M10 x 25, 8.8, Full Thd,
4	140045	12	WASHER, SPRING, Belleville, M10,
5	445395	12	RIVET, Pop, M4.8 x 18.1,
6	100016	5	NUT, M10, Cl 8,
7	9706704	1	BOLT, Hex, M10 x 35, 8.8, Full Thd,

15.227(A 01) GRAIN ELEVATOR BOTTOM DRIVE

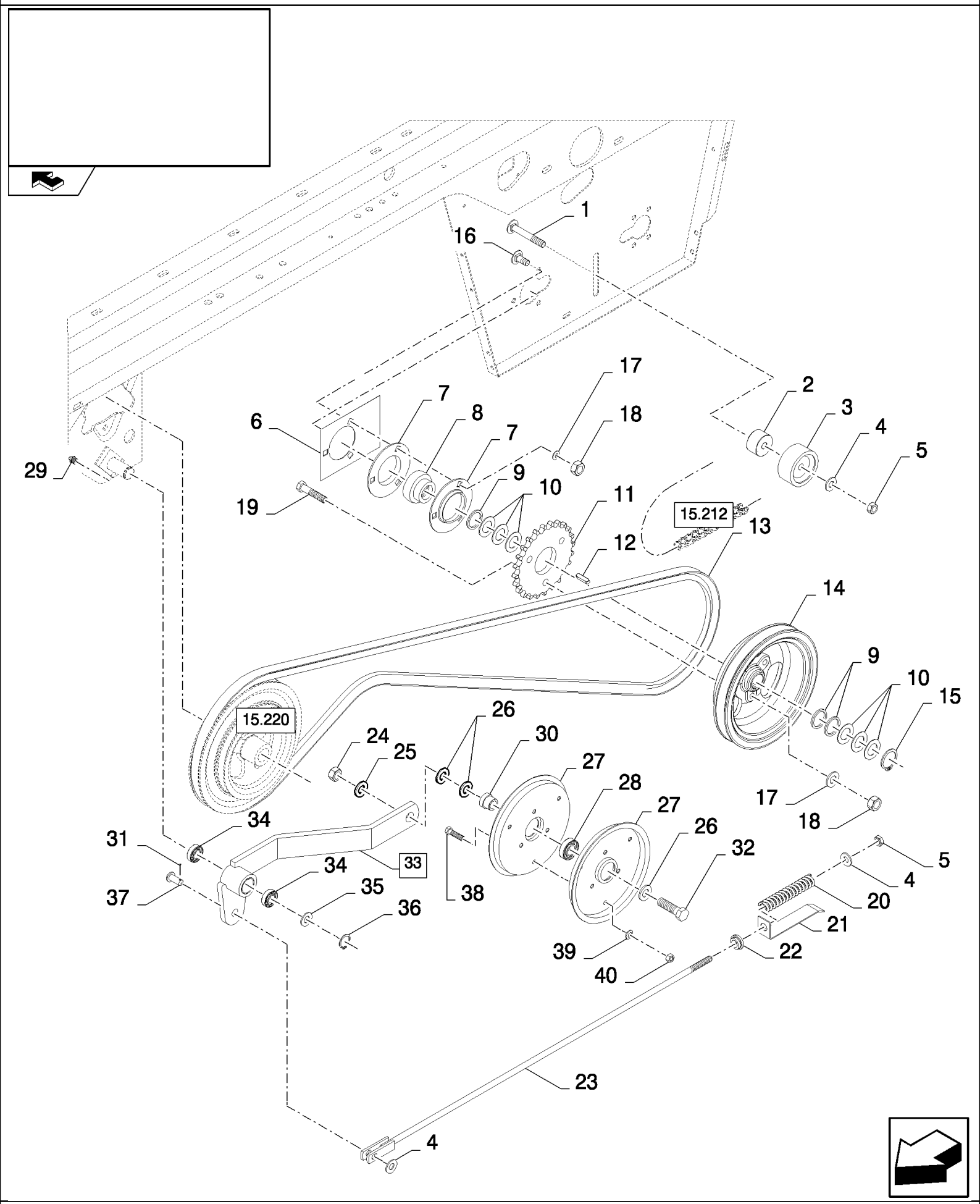

CSX7080 C659 - COMBINE (9/06-8/08)

15.227(A 01) GRAIN ELEVATOR BOTTOM DRIVE

ссылка	Номер детали	Кол-во	Описание
1	300662	1	BOLT, CARRIAGE, Short NK, M12 x 80, Cl8.8,
2	84980957	1	BUSHING,
3	334970	1	PINION, IDLER,
4	378245	3	WASHER, M12,
5	412126	2	NUT, LOCK, M12 x 1.75, Cl 8,
6	84980956	1	PLATE,
7	40697	2	FLANGE,
8	325106	1	BEARING ASSY,
9	140110	3	WASHER, 31MM
10	140108	6	WASHER, 31MM
11	84981311	1	SPROCKET, DRIVEN,
12	170008	1	KEY,
13	80422731	1	BELT, TRANSMISSION,
14	87380138	1	PULLEY,
15	370003	1	RING, SNAP, M30, Ext,
16	86633356	3	BOLT, CARRIAGE, Short NK, M10 x 25, Cl8.8, Full Thd,
17	140045	6	WASHER, SPRING, Belleville, M10,
18	100016	6	NUT, M10, Cl 8,
19	120070	3	BOLT, Hex, M10 x 60, 8.8,
20	385307	1	SPRING,
21	84057943	1	INDICATOR,
22	439857	1	BUSHING,
23	84443895	1	ROD,
24	100020	1	NUT, M16, Cl 8,
25	140048	1	WASHER, SPRING, Belleville, M16,
26	378246	4	WASHER, 16MM
27	434227	2	PULLEY,
28	34439	1	BEARING, BALL,
29	321204	1	NIPPLE, LUBE, M6 x 1, 16mm lg,
30	9515145	1	BUSHING,
31	130003	1	PIN, SPLIT (COTTER), M3.2 x 20,
32	120092	1	SCREW, Hex, M16 x 70, 8.8,
33	87388995	1	(34)
34	84057311	2	SLEEVE,
35	338206	1	WASHER, 26MM
36	370002	1	RING, SNAP, M25, Ext,
37	412209	1	PIN, CLEVIS, M12 x 30,
38	120107	6	BOLT, Hex, M8 x 50, 8.8, Full Thd,
39	322358	6	WASHER, SPRING, Belleville, M8,
40	9706690	6	NUT, M8, Cl 8,

15.228(A 01) FAN, FRAME

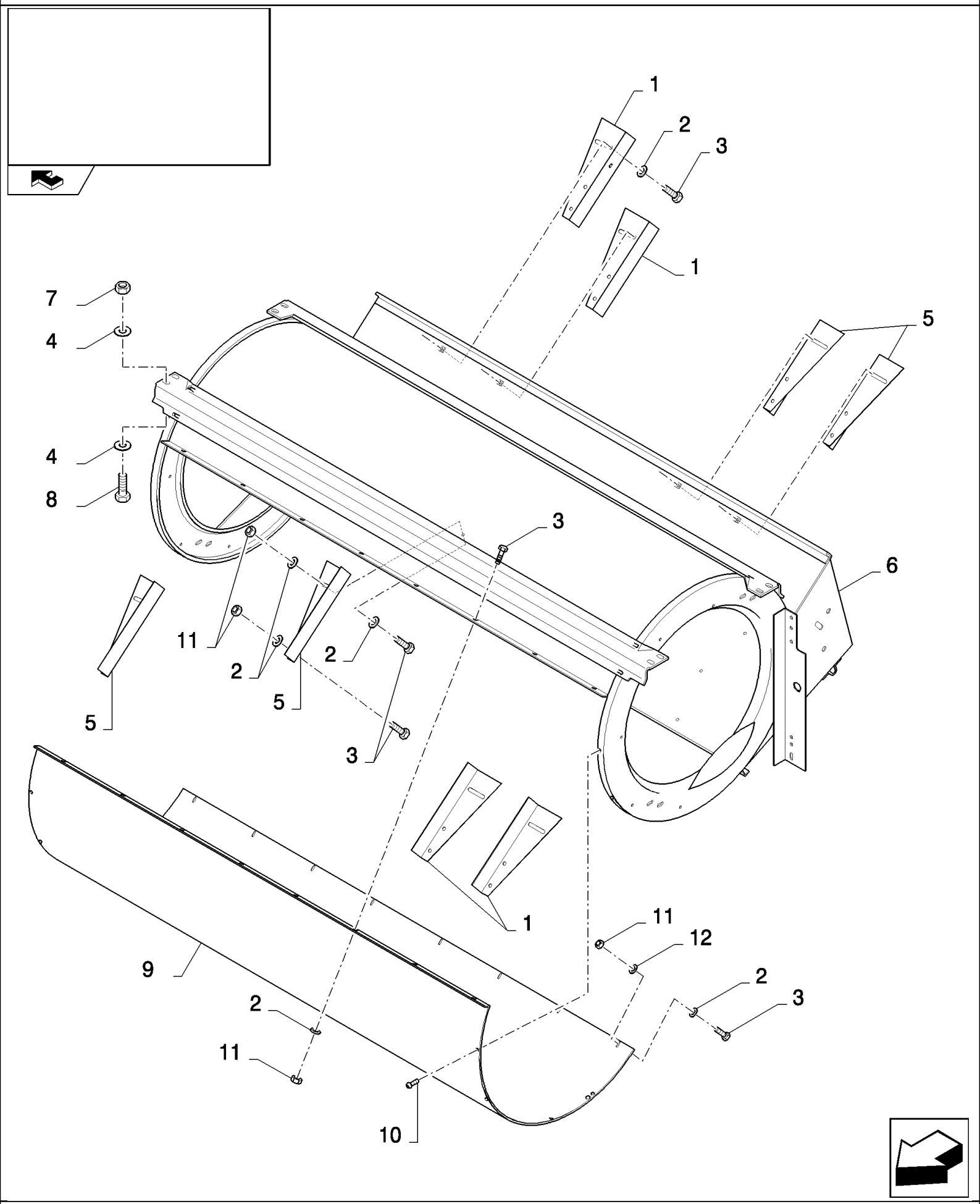

CSX7080 C659 - COMBINE (9/06-8/08)

15.228(A 01) FAN, FRAME

ссылка	Номер детали	Кол-во	Описание
1	331712	4	PLATE,
2	322357	36	WASHER, SPRING, Belleville, M6,
3	86508568	32	SCREW, Hex, M6 x 16, 8.8,
4	378244	16	WASHER, M10,
5	331713	4	SUPPORT,
6	84806955	1	HOUSING, FAN,
7	100037	8	NUT, M10 x 1.5, Cl 8,
8	43140	8	BOLT, Hex, M10 x 30, 8.8, Full Thd,
9	84806956	1	COVER,
10	353075	10	SCREW,
11	9706755	24	NUT, M6, Cl 8,
12	412649	8	WASHER, SPRING, Belleville, M6,

15.229(A 01) FAN, BLOWER AND GUIDES

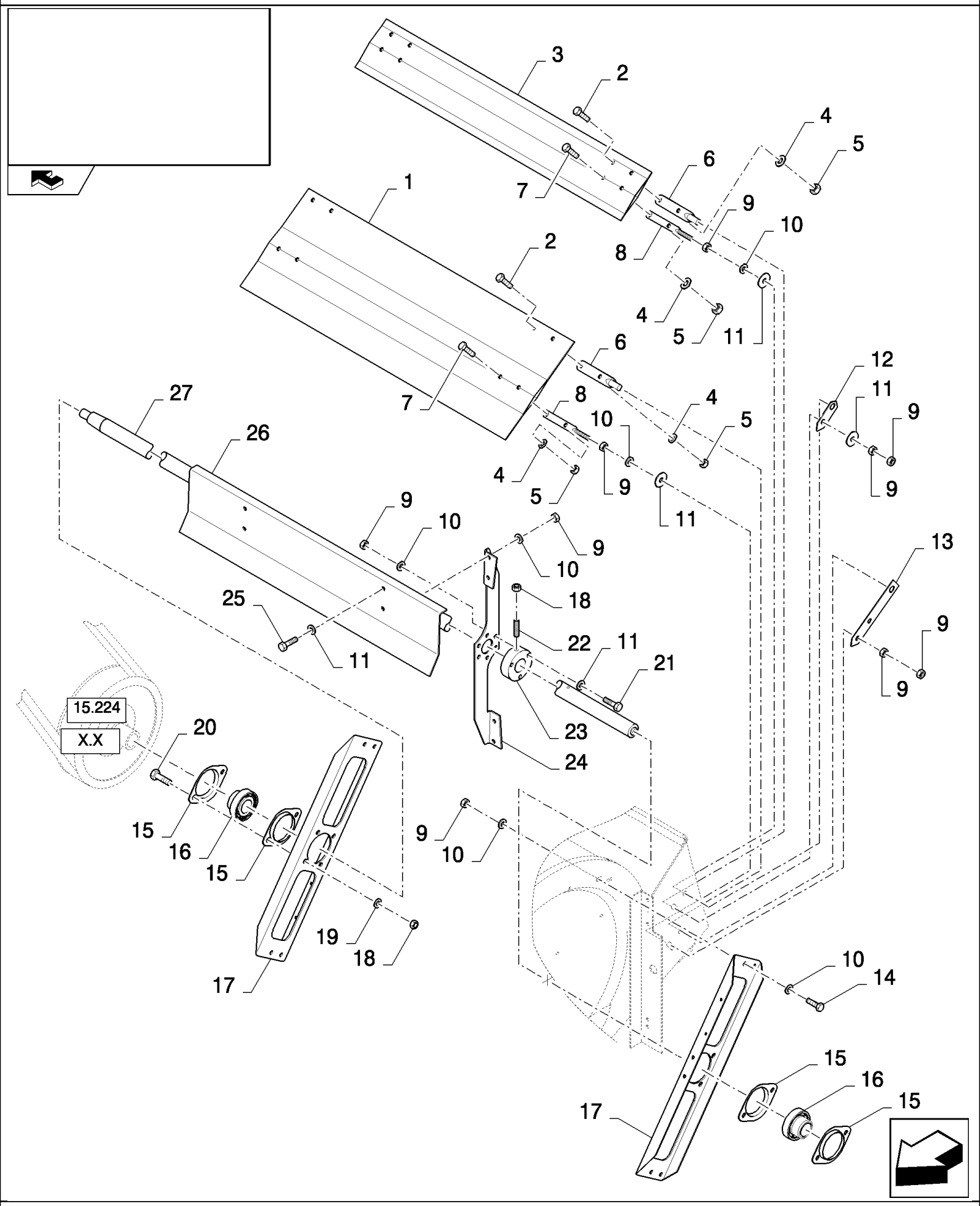

CSX7080 C659 - COMBINE (9/06-8/08)

15.229(A 01) FAN, BLOWER AND GUIDES

ссылка	Номер детали	Кол-во	Описание
1	84022819	1	DEFLECTOR,
2	120100	8	BOLT, Hex, M6 x 20, 8.8,
3	84022805	1	DEFLECTOR,
4	322357	16	WASHER, SPRING, Belleville, M6,
5	9706755	16	NUT, M6, Cl 8,
6	482006	4	SCREW,
7	86508568	8	SCREW, Hex, M6 x 16, 8.8,
8	340039	4	SCREW,
9	9706690	65	NUT, M8, Cl 8,
10	322358	65	WASHER, SPRING, Belleville, M8,
11	140041	44	WASHER, M8 x 28 x 3,
12	484811	2	INDICATOR,
13	333383	2	INDICATOR,
14	120103	8	BOLT, Hex, M8 x 16, 8.8,
15	136978	4	FLANGE,
16	84814912	2	BEARING, BALL,
17	84433291	2	SUPPORT,
18	100016	7	NUT, M10, Cl 8,
19	140045	4	WASHER, SPRING, Belleville, M10,
20	43138	4	SCREW, Hex, M10 x 20, 8.8, Full Thd,
21	43130	9	BOLT, Hex, M8 x 50, 8.8,
22	391136	3	SET SCREW, Hex Soc, M10 x 40, M8x40
23	80393985	3	HUB,
24	84031906	9	SUPPORT,
25	120104	36	SCREW, Hex, M8 x 20, 8.8,
26	84031907	6	BLADE,
27	84071760	1	SHAFT,

CSX7080 C659 - COMBINE (9/06-8/08)

15.231(B 01) FIXED SHOE, UPPER SIEVES - HC 1 1/8"

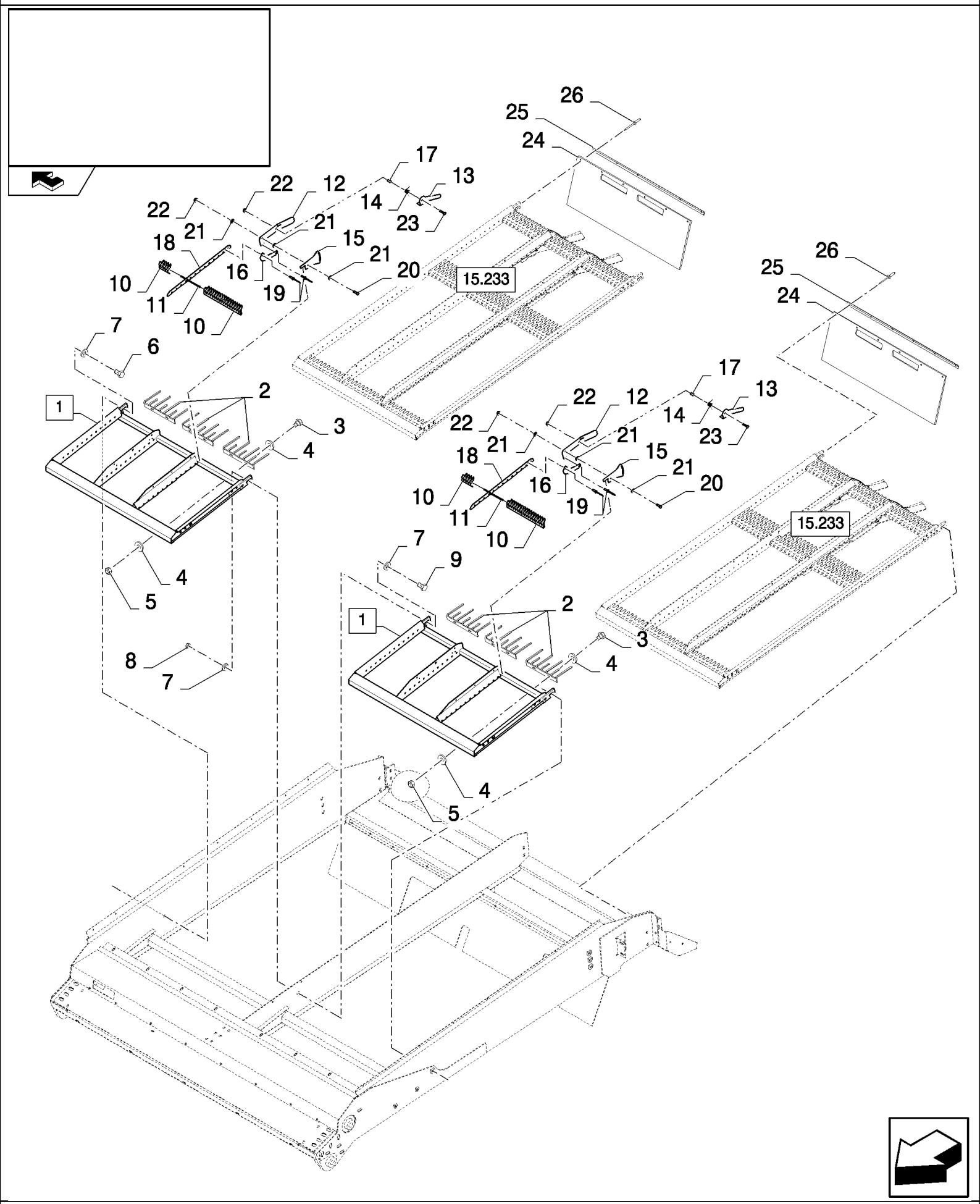

CSX7080 C659 - COMBINE (9/06-8/08)

15.231(B 01) FIXED SHOE, UPPER SIEVES - HC 1 1/8"

ссылка	Номер детали	Кол-во	Описание
1	84442356	1	SIEVE, (10 to 23)
2	84446427	6	RAKE,
3	120102	12	SCREW, Hex, M6 x 40, 8.8, Full Thd,
4	412649	24	WASHER, SPRING, Belleville, M6,
5	9706755	12	NUT, M6, Cl 8,
6	43138	2	SCREW, Hex, M10 x 20, 8.8, Full Thd,
7	140045	4	WASHER, SPRING, Belleville, M10,
8	100016	1	NUT, M10, Cl 8,
9	9706704	1	BOLT, Hex, M10 x 35, 8.8, Full Thd,
10	324715	39	BAR,
11	388354	13	WIRE, RETAINING,
12	84442030	1	TOOTHED SECTOR,
13	84442029	1	HANDLE,
14	84441976	1	SPRING,
15	84442031	1	PLATE,
16	84442032	1	PLATE,
17	84442028	1	BUSHING,
18	84442033	1	LOCK,
19	281061	2	RIVET, Rd Hd, M6 x 12,
20	120100	1	BOLT, Hex, M6 x 20, 8.8,
21	140040	3	WASHER, M6 x 22 x 2,
22	353308	2	NUT, M6 x 1, Cl 8,
23	86512441	1	BOLT, CARRIAGE, Short NK, M6 x 30, Cl8.8, Full Thd,
24	84983034	2	CANVAS,
25	84983035	2	
26	445395	12	RIVET, Pop, M4.8 x 18.1,

15.233(A 01) FIXED SHOE, UPPER SIEVES - HC 1 1/8"

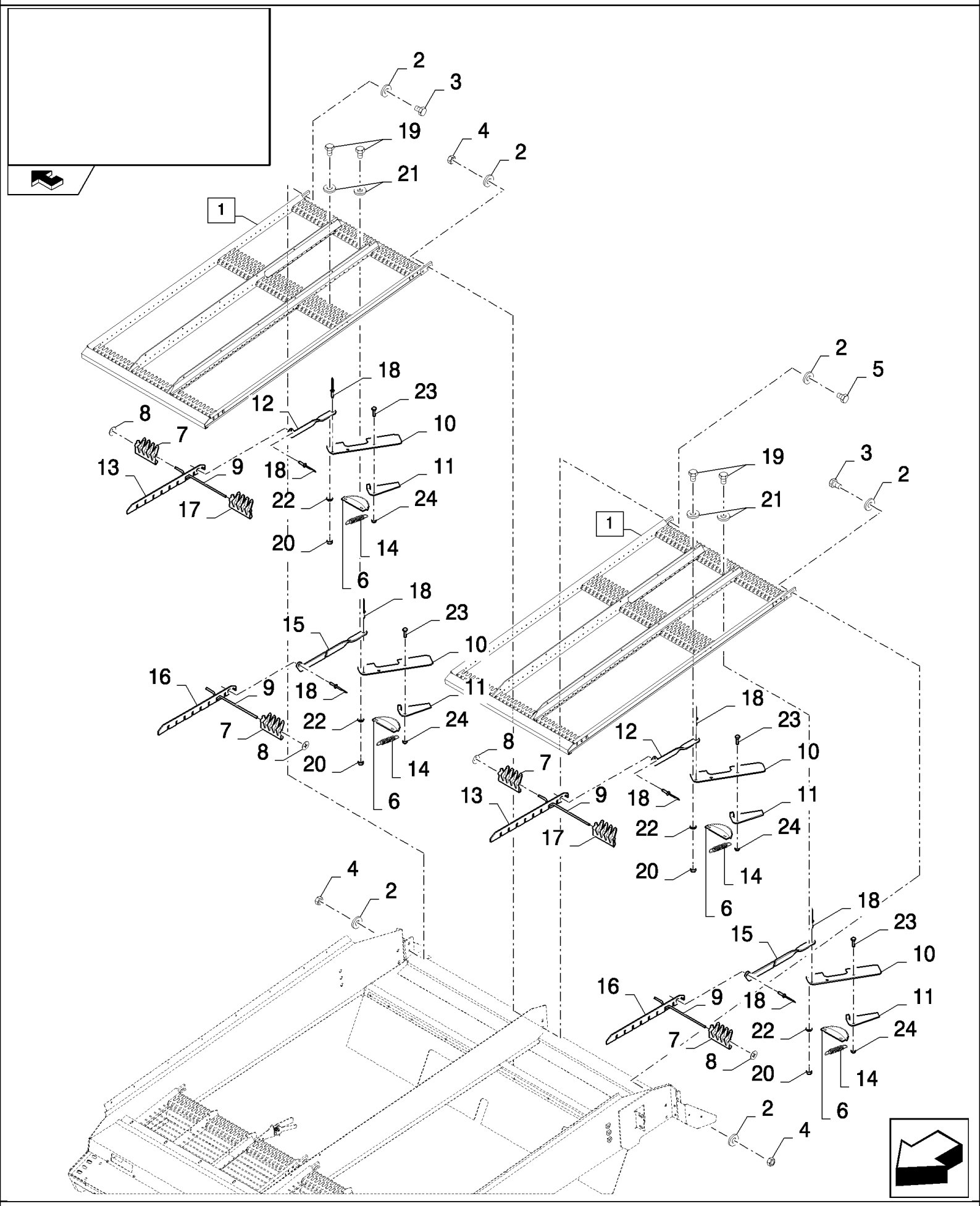

CSX7080 C659 - COMBINE (9/06-8/08)

15.233(A 01) FIXED SHOE, UPPER SIEVES - HC 1 1/8"

ссылка	Номер детали	Кол-во	Описание
1	84442418	2	SIEVE, (6 to 24)
2	140045	6	WASHER, SPRING, Belleville, M10,
3	43140	2	BOLT, Hex, M10 x 30, 8.8, Full Thd,
4	100016	3	NUT, M10, Cl 8,
5	9706704	1	BOLT, Hex, M10 x 35, 8.8, Full Thd,
6	426565	2	QUADRANT,
7	324715	119	BAR,
8	398561	6	CLIP,
9	388354	45	WIRE, RETAINING,
10	9817781	2	HANDLE,
11	432187	2	HANDLE,
12	84097908	1	PLATE,
13	84442072	1	PLATE,
14	449942	2	SPRING,
15	84442044	1	PLATE,
16	84442042	1	PLATE,
17	84068920	16	PLATE, COVER,
18	281061	4	RIVET, Rd Hd, M6 x 12,
19	412117	2	BOLT,
20	86629542	2	NUT, LOCK, M8 x 1.25, Cl 8,
21	331171	2	WASHER,
22	300367	2	WASHER,
23	86508568	2	SCREW, Hex, M6 x 16, 8.8,
24	353308	2	NUT, M6 x 1, Cl 8,

CSX7080 C659 - COMBINE (9/06-8/08)

15.234(A 01) LOWER SIEVE CL 1 1/8"

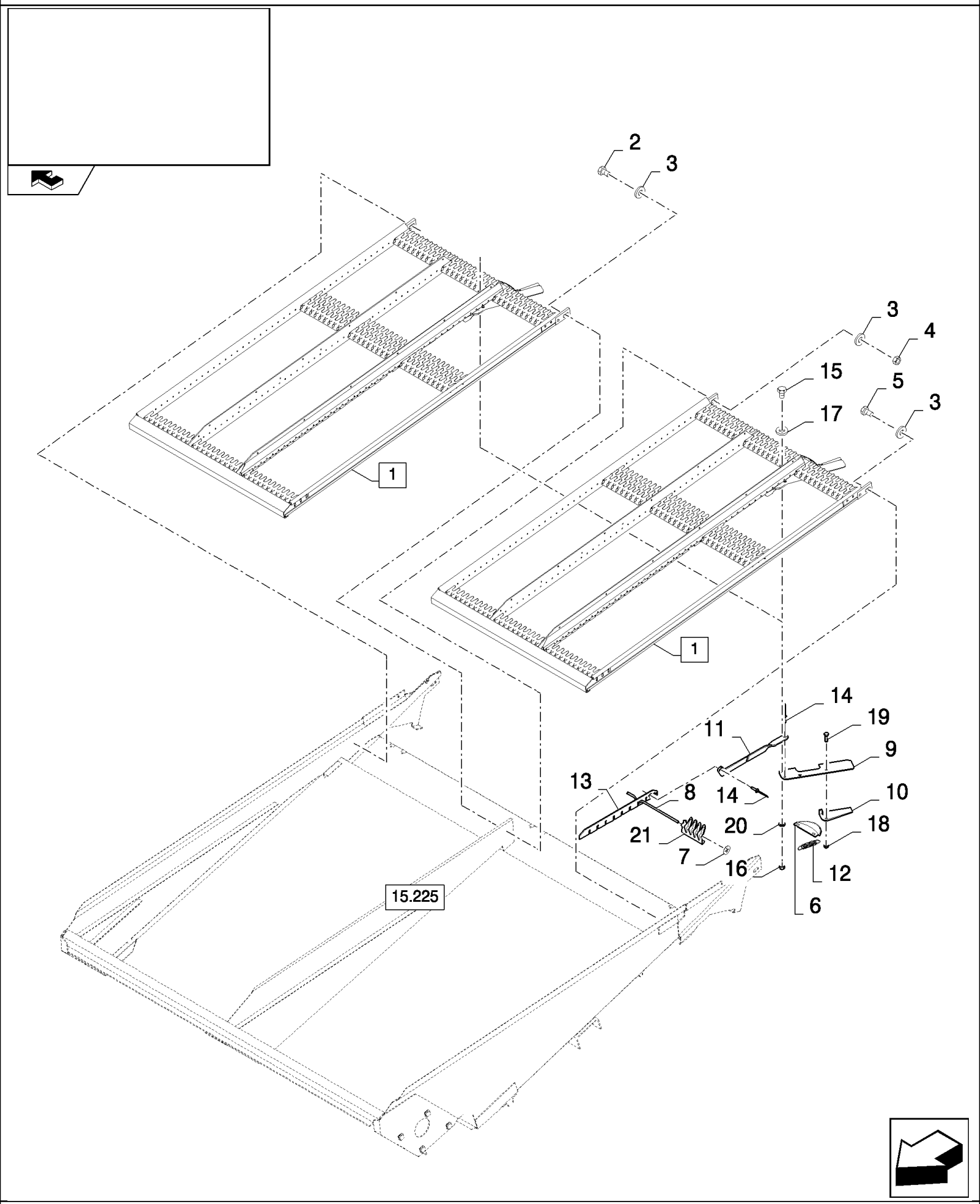

CSX7080 C659 - COMBINE (9/06-8/08)

15.234(A 01) LOWER SIEVE CL 1 1/8"

ссылка	Номер детали	Кол-во	Описание
1	84097906	2	SIEVE, (6 to 21)
2	120068	1	BOLT, Hex, M10 x 40, 8.8, Full Thd,
3	140045	4	WASHER, SPRING, Belleville, M10,
4	100016	1	NUT, M10, Cl 8,
5	43138	2	SCREW, Hex, M10 x 20, 8.8, Full Thd,
6	426565	1	QUADRANT,
7	398561	6	CLIP,
8	388354	45	WIRE, RETAINING,
9	9817781	1	HANDLE,
10	432187	1	HANDLE,
11	84097908	1	PLATE,
12	449942	1	SPRING,
13	410110	1	
14	281061	2	RIVET, Rd Hd, M6 x 12,
15	412117	1	BOLT,
16	86629542	1	NUT, LOCK, M8 x 1.25, Cl 8,
17	331171	1	WASHER,
18	353308	1	NUT, M6 x 1, Cl 8,
19	86508568	1	SCREW, Hex, M6 x 16, 8.8,
20	300367	1	WASHER,
21	481730	135	BAR,

15.235(01) GRASS SEED EQUIPMENT

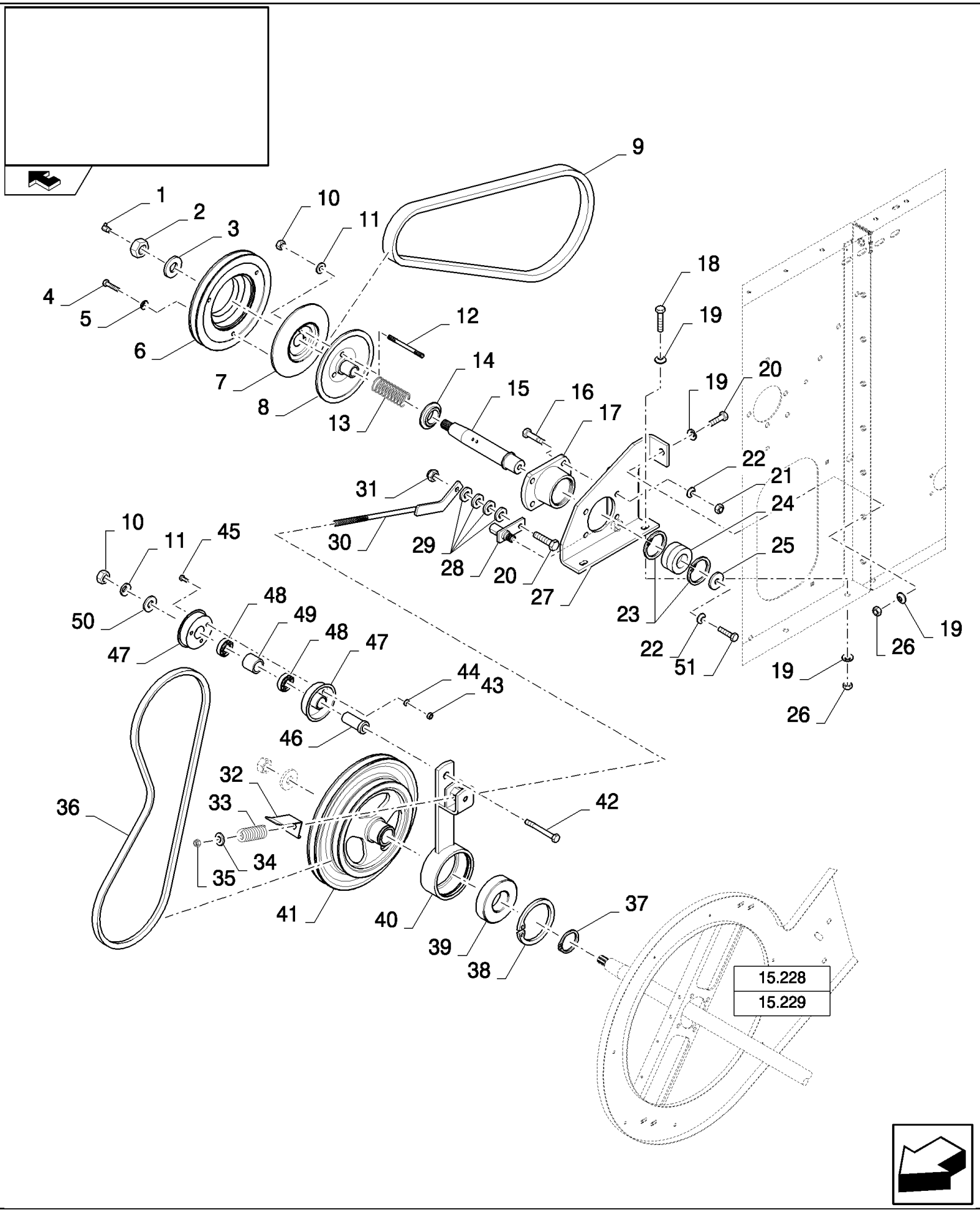

CSX7080 C659 - COMBINE (9/06-8/08)

15.235(01) GRASS SEED EQUIPMENT

ссылка	Номер детали	Кол-во	Описание
1	323713	1	NIPPLE, LUBE,
2	100085	1	NUT, M20 x 1.5, Cl 8,
3	86592703	1	WASHER, M20 x 50 x 6, HT,
4	43127	3	BOLT, Hex, M8 x 25, 8.8,
5	322358	3	WASHER, SPRING, Belleville, M8,
6	84452186	1	PULLEY,
7	84452219	1	HALF-PULLEY,
8	84334072	1	PULLEY,
9	84452153	1	BELT,
10	100020	4	NUT, M16, Cl 8,
11	140048	4	WASHER, SPRING, Belleville, M16,
12	110055	3	STUD,
13	334054	1	SPRING,
14	84452294	1	RING,
15	84452136	1	SPINDLE,
16	300389	4	BOLT, Hex, M12 x 35, 8.8, Full Thd,
17	84452245	1	HOUSING, BEARING,
18	120112	2	BOLT, Hex, M10 x 40, 8.8, Full Thd,
19	140045	6	WASHER, SPRING, Belleville, M10,
20	9706704	2	BOLT, Hex, M10 x 35, 8.8, Full Thd,
21	9706685	4	NUT, M12, Cl 8,
22	140046	5	WASHER, Belleville, M12,
23	300649	2	RING, SNAP,
24	84452155	1	BEARING ASSY,
25	80395606	1	WASHER,
26	100016	3	NUT, M10, Cl 8,
27	87575964	1	SUPPORT,
28	84431514	1	HINGE,
29	378244	4	WASHER, M10,
30	87576322	1	TIE-ROD,
31	100037	1	NUT, M10 x 1.5, Cl 8,
32	84452396	1	INDICATOR,
33	440651	1	SPRING,
34	378245	1	WASHER, M12,
35	412126	1	NUT, LOCK, M12 x 1.75, Cl 8,
36	84452112	1	BELT,
37	370008	1	RING, SNAP, M50, Ext,
38	301652	1	RING, SNAP, M110, Int,
39	388069	1	BEARING ASSY,
40	84452357	1	LEVER, IDLER,
41	84452194	1	PULLEY,
42	374889	1	BOLT, Hex, M16 x 100, 8.8,
43	15896221	3	NUT, M6, Cl 10,
44	322357	3	WASHER, SPRING, Belleville, M6,

ссылка	Номер детали	Кол-во	Описание
45	86508568	3	SCREW, Hex, M6 x 16, 8.8,
46	427248	1	BUSHING,
47	84441735	2	HALF-PULLEY,
48	443898	2	BEARING, BALL,
49	430235	1	SPACER,
50	140093	1	WASHER,
51	300388	1	SCREW, Hex, M12 x 25, 8.8,

15.236(A 01) GRAIN PAN, NON REMOVABLE

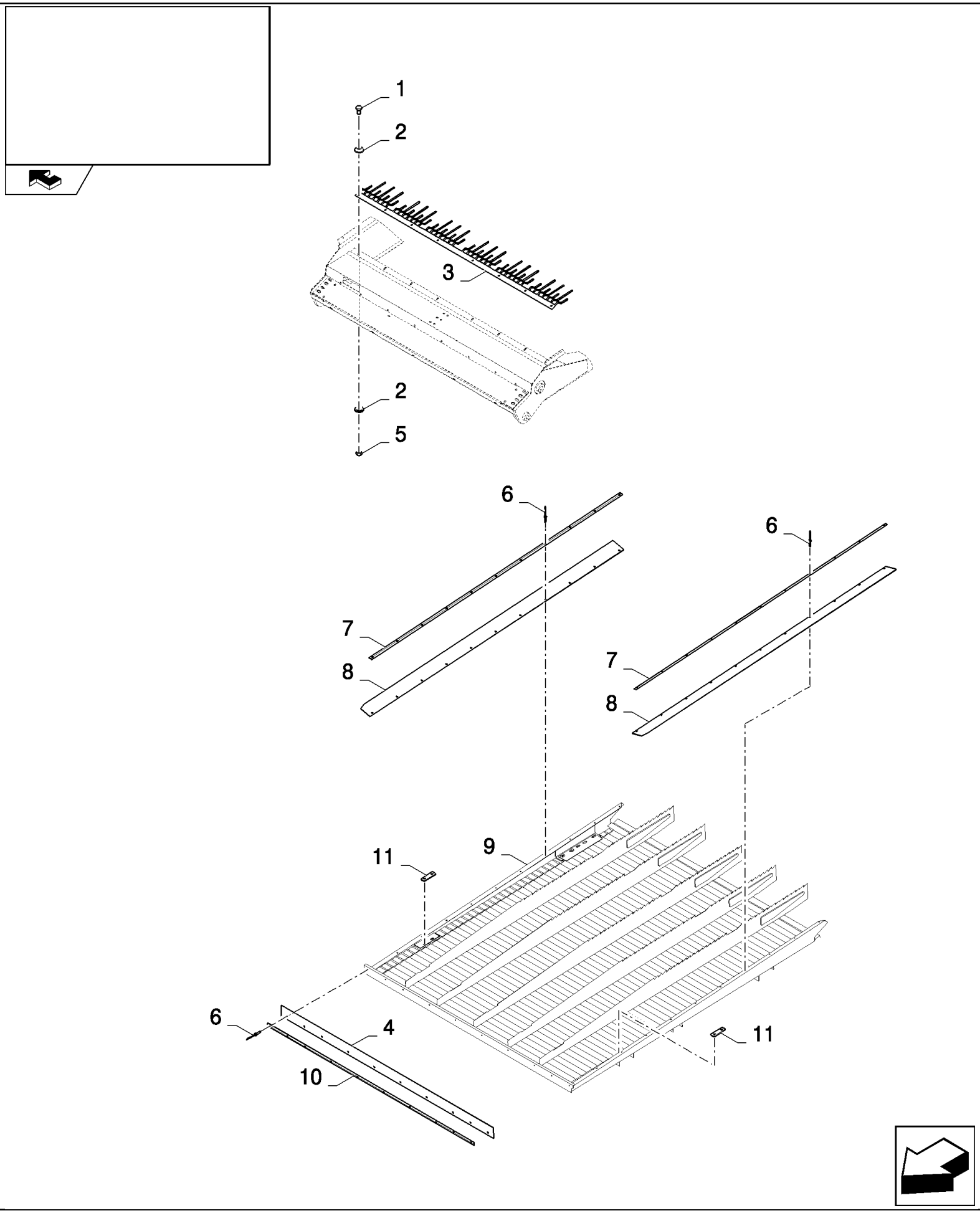

CSX7080 C659 - COMBINE (9/06-8/08)

15.236(A 01) GRAIN PAN, NON REMOVABLE

ссылка	Номер детали	Кол-во	Описание
1	86508568	AR	SCREW, Hex, M6 x 16, 8.8,
2	322357	AR	WASHER, SPRING, Belleville, M6,
3	84452950	1	RAKE, , FOR CSX7060 ONLY
3	84446434	1	RAKE, , FOR CSX7080 ONLY
4	84431030	1	CANVAS, , FOR CSX7060 ONLY
4	84072359	1	CANVAS, , FOR CSX7080 ONLY
5	89706755	AR	NUT, M6
6	445395	AR	RIVET, Pop, M4.8 x 18.1,
7	84461322	2	PLATE, FIXING,
8	84461049	2	CANVAS,
9	84461624	1	DEFLECTOR, , FOR CSX7060 ONLY
9	84461623	1	DEFLECTOR, , FOR CSX7080 ONLY
10	84431049	1	PLATE, FIXING, , FOR CSX7060 ONLY
10	84072727	1	PLATE, FIXING, , FOR CSX7080 ONLY
11	333541	2	PLATE, ADJUSTING,

15.237(01) STRAWWALKER COVER PLATES - VERTICAL

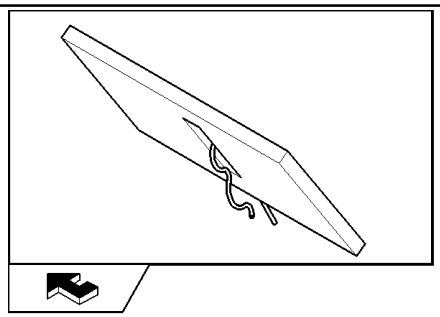

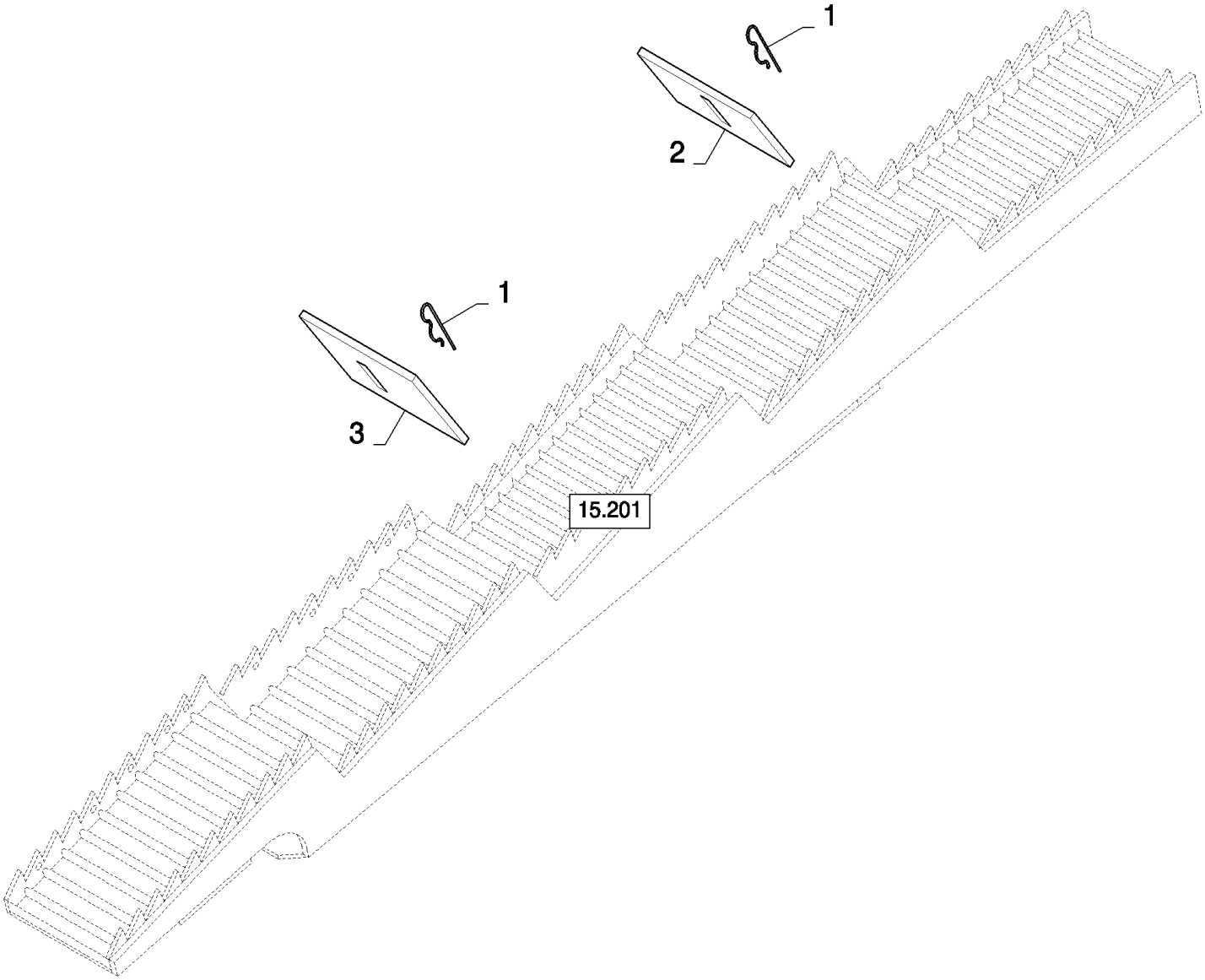

CSX7080 C659 - COMBINE (9/06-8/08)

15.237(01) STRAWWALKER COVER PLATES - VERTICAL

ссылка	Номер детали	Кол-во	Описание
1	180042	24	PIN, SPLIT (COTTER), Hex, 1/4"-20 x 1 3/4", G5,
2	309623	18	COVER,
3	397862	6	PLATE, STEEL,

UNLOADING	**VIDANGE**	**DESCARGA**	**TØMME**
SCARICO	**ENTLEERUNG**	**DESCARGA**	**ONTLADING**

SEC. 16

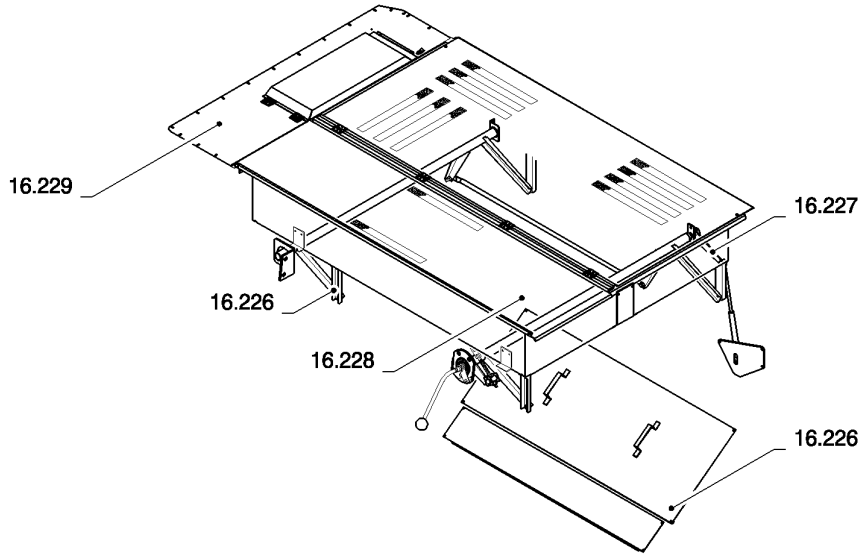

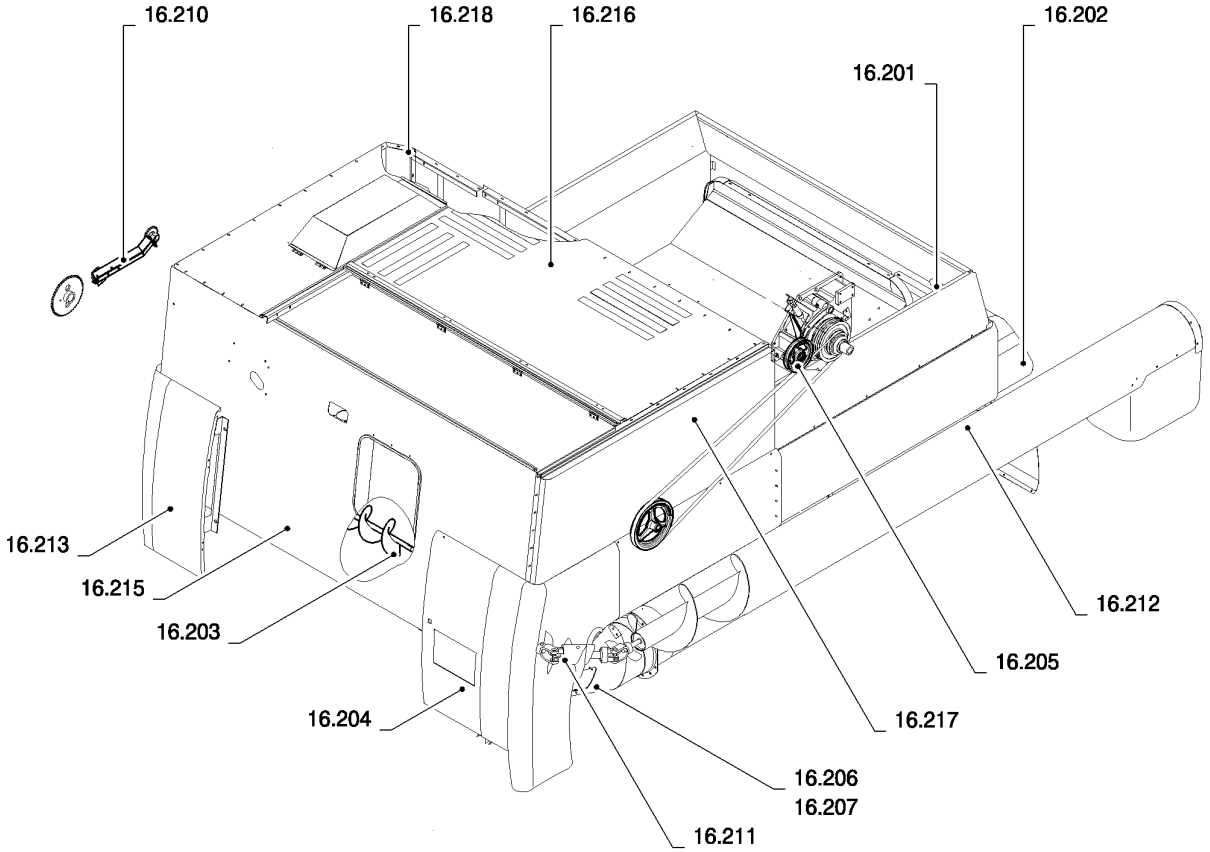

ссылка	Номер детали	Кол-во	Описание

UNLOADING	**VIDANGE**	**DESCARGA**	**TØMME**
SCARICO	**ENTLEERUNG**	**DESCARGA**	**ONTLADING**

SEC. 16

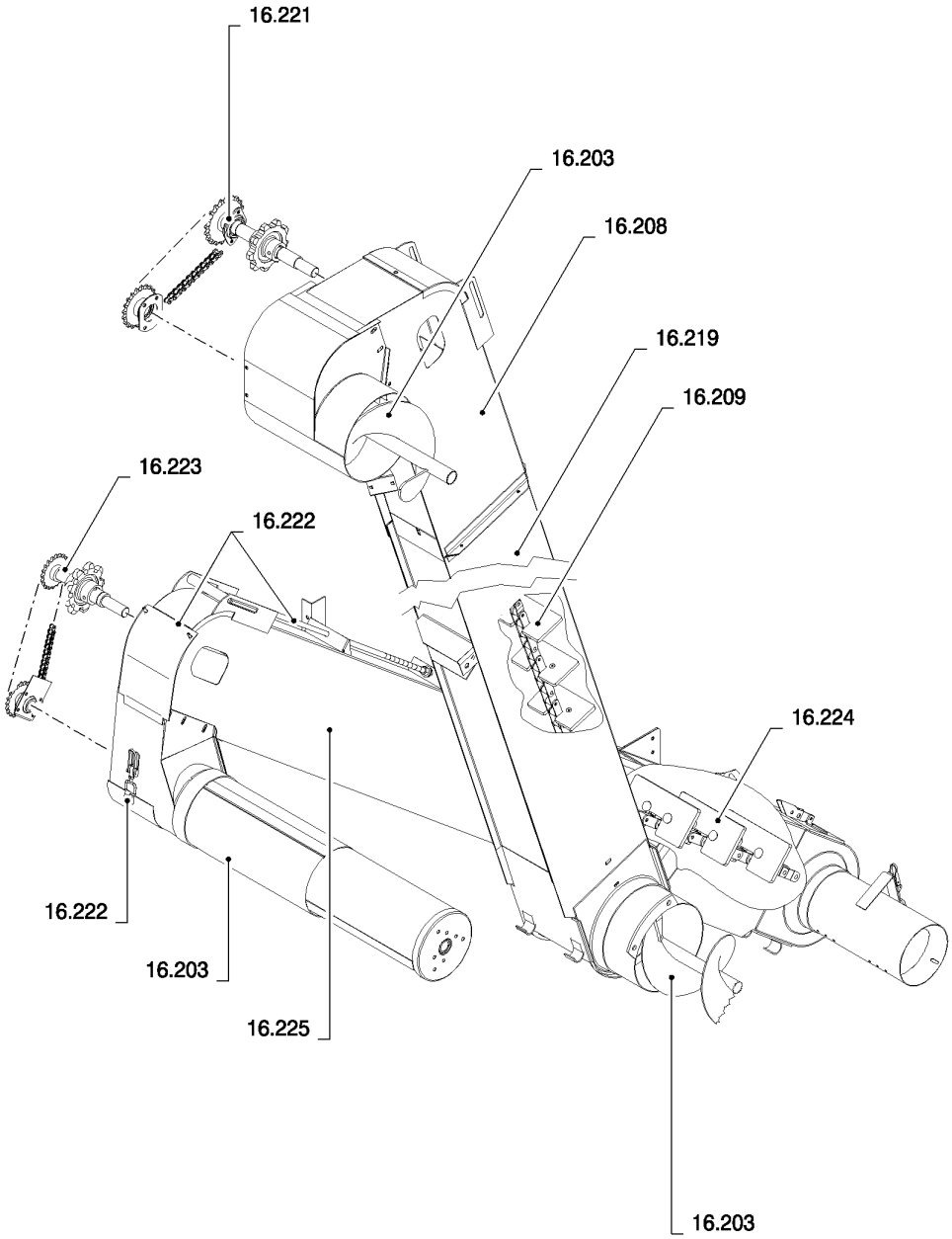

ссылка	Номер детали	Кол-во	Описание

16.201(A 01) GRAINTANK - SHIELDS, REAR

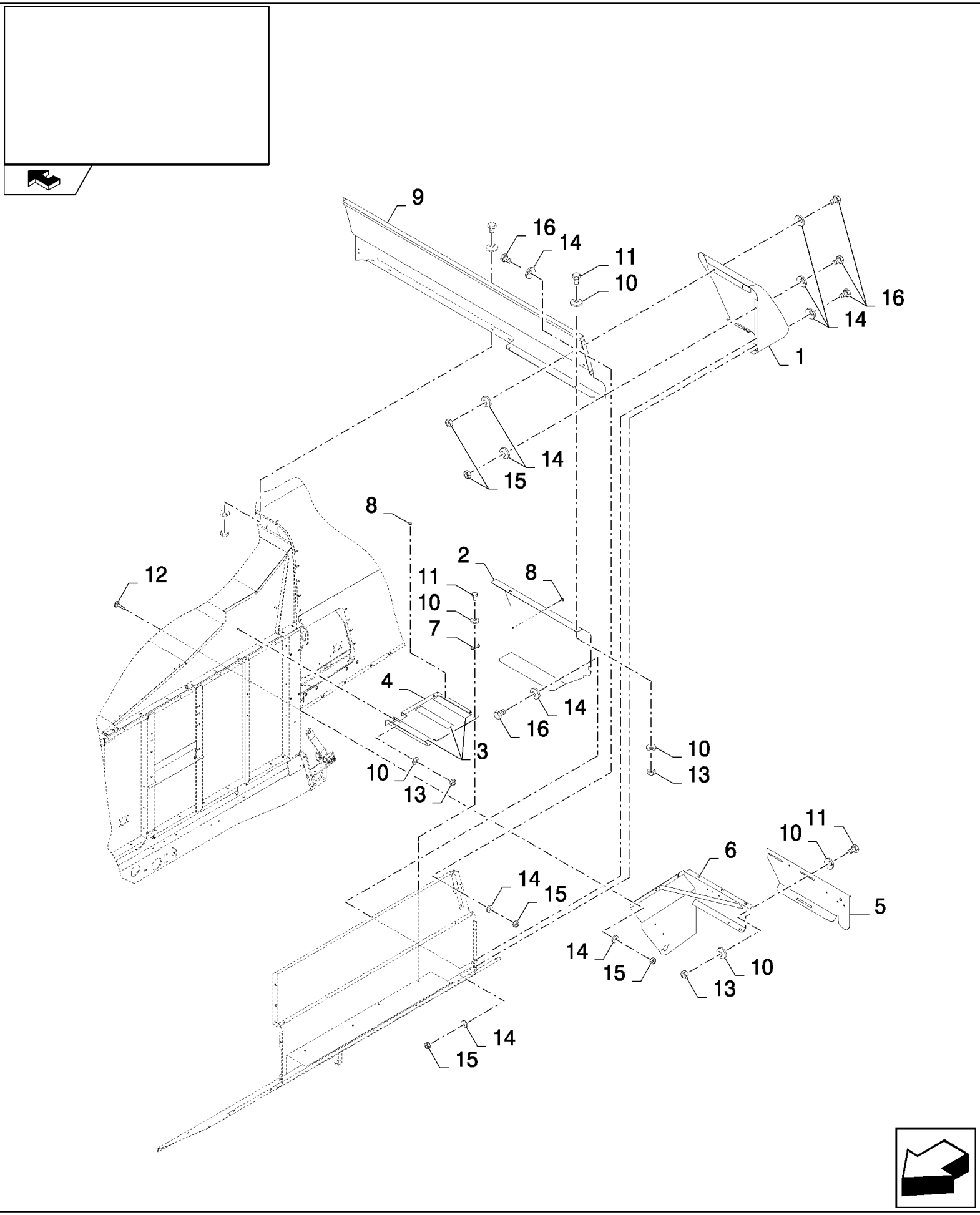

CSX7080 C659 - COMBINE (9/06-8/08)

16.201(A 01) GRAINTANK - SHIELDS, REAR

ссылка	Номер детали	Кол-во	Описание
1	84446997	1	SHIELD, , FOR CSX7060 ONLY
1	84446964	1	SHIELD, , FOR CSX7080 ONLY
2	84446954	1	PLATE, , FOR CSX7060 ONLY, BSN C614
2	84446616	1	PLATE, , FOR CSX7080 ONLY, BSN C614
3	401502	AR	STRIP, ANTI-SKID, L=1.1M, FOR CSX7060 ONLY
3	401502	AR	STRIP, ANTI-SKID, L=0.9M, FOR CSX7080 ONLY
4	84446944	1	PLATE, , FOR CSX7060 ONLY
4	84446623	1	PLATE, , FOR CSX7080 ONLY
5	84447282	1	PLATE, , FOR CSX7080 ONLY
6	87381438	1	PLATE, , FOR CSX7060 ONLY
6	87381448	1	PLATE, , FOR CSX7080 ONLY
7	425093	1	CLIP, , BSN C614
8	331233	3	PLUG, , BSN C614
9	84983371	1	PLATE, , FOR CSX7060 ONLY
9	84440579	1	PLATE, , FOR CSX7060 ONLY, FOR LATERALE ONLY
9	84983310	1	PLATE, , FOR CSX7080 ONLY
9	84440578	1	PLATE, , FOR CSX7080 ONLY, FOR LATERALE ONLY
10	412650	AR	WASHER, Belleville, M8,
11	43127	AR	BOLT, Hex, M8 x 25, 8.8,
12	9706703	3	BOLT, CARRIAGE, Short NK, M6 x 20, Cl8.8, Full Thd,
13	9706690	AR	NUT, M8, Cl 8,
14	412649	26	WASHER, SPRING, Belleville, M6,
15	9706755	14	NUT, M6, Cl 8,
16	120100	AR	BOLT, Hex, M6 x 20, 8.8,

16.202(A 01) GRAINTANK - SHIELDS, REAR

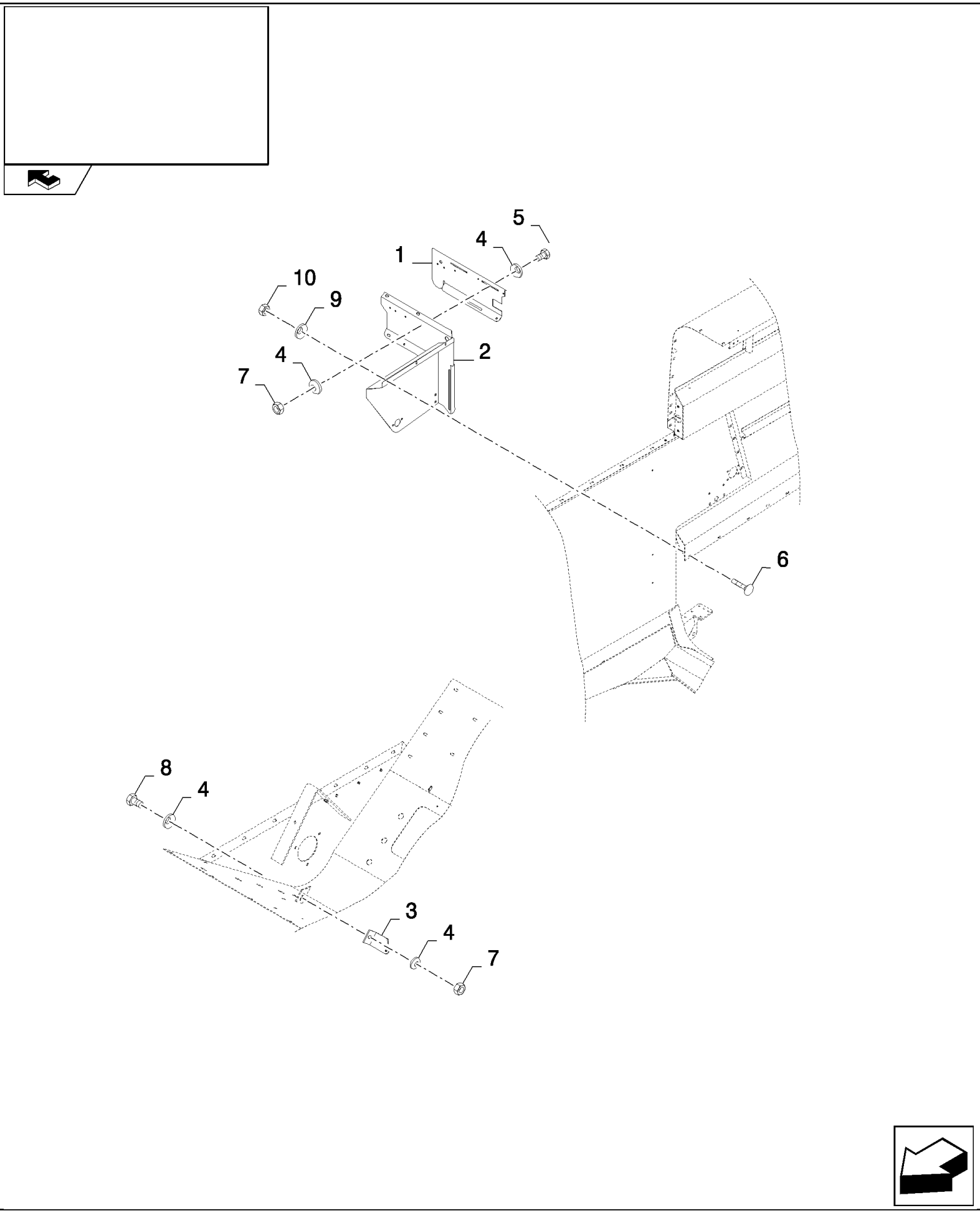

CSX7080 C659 - COMBINE (9/06-8/08)

16.202(A 01) GRAINTANK - SHIELDS, REAR

ссылка	Номер детали	Кол-во	Описание
1	84447300	1	PLATE, , FOR CSX7080 ONLY
2	87381445	1	PLATE, , FOR CSX7060 ONLY
2	87381473	1	PLATE, , FOR CSX7080 ONLY
3	84989098	1	BRACKET,
4	412650	AR	WASHER, Belleville, M8,
5	43127	AR	BOLT, Hex, M8 x 25, 8.8,
6	9706703	3	BOLT, CARRIAGE, Short NK, M6 x 20, Cl8.8, Full Thd,
7	9706690	AR	NUT, M8, Cl 8,
8	120104	1	SCREW, Hex, M8 x 20, 8.8,
9	412649	3	WASHER, SPRING, Belleville, M6,
10	9706755	3	NUT, M6, Cl 8,

16.203(B 01) AUGERS FOR GRAIN AND TAILINGS ELEVATORS

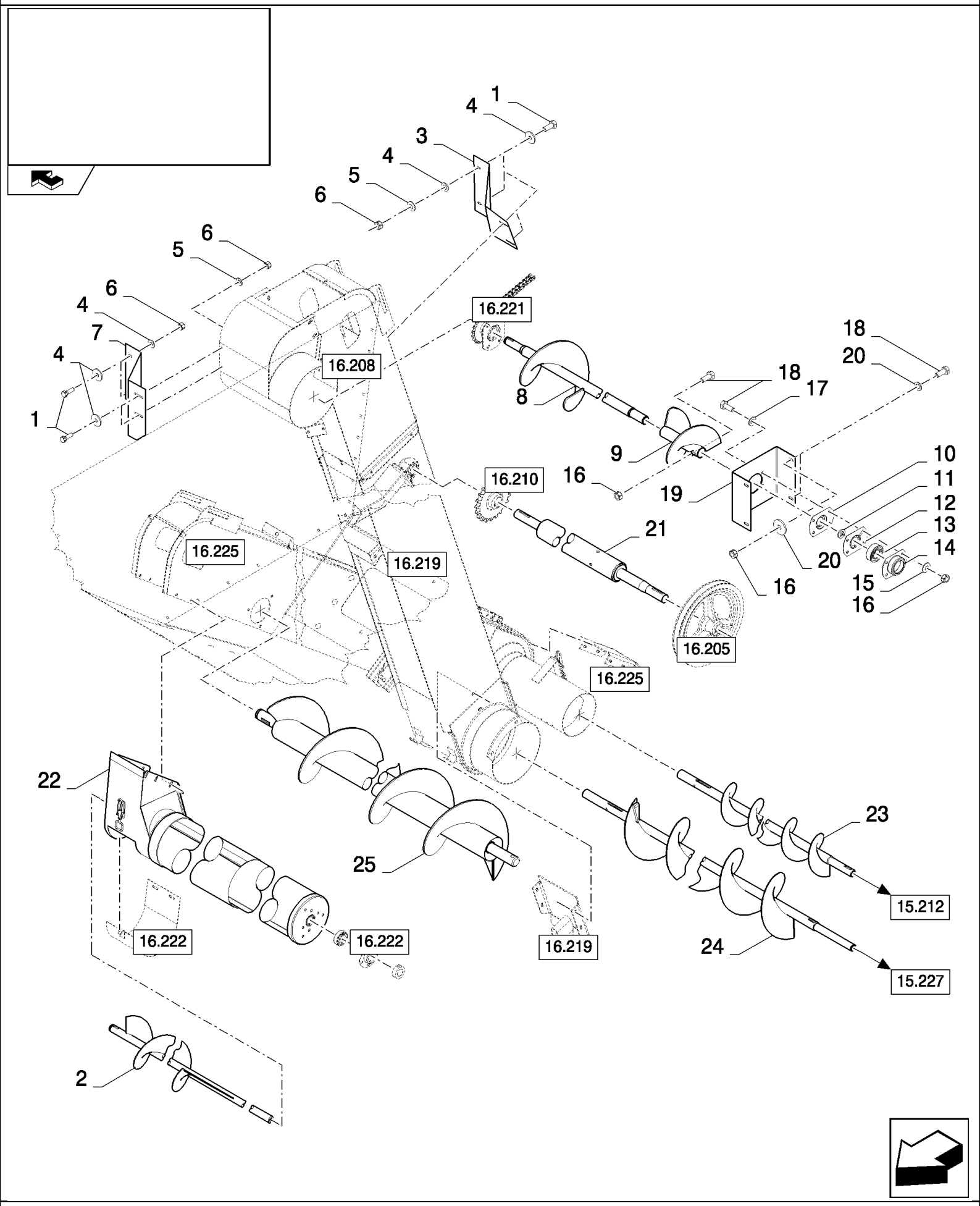

CSX7080 C659 - COMBINE (9/06-8/08)

16.203(B 01) AUGERS FOR GRAIN AND TAILINGS ELEVATORS

ссылка	Номер детали	Кол-во	Описание
1	120100	8	BOLT, Hex, M6 x 20, 8.8,
2	84981168	1	AUGER, , STANDARD
2	84982323	1	AUGER, , REINFORCED
3	84980408	1	SUPPORT,
4	412649	16	WASHER, SPRING, Belleville, M6,
5	322357	2	WASHER, SPRING, Belleville, M6,
6	353308	8	NUT, M6 x 1, Cl 8,
7	84980407	1	PLATE,
8	84983012	1	AUGER, , STANDARD
8	84983014	1	AUGER, , REINFORCED
9	84992855	2	AUGER, , STANDARD
9	84981148	2	AUGER, , REINFORCED
10	84814926	1	COVER,
11	220061	1	GASKET,
12	84814927	1	COVER,
13	84980391	1	BEARING ASSY,
14	84435386	1	HOUSING, BEARING,
15	322358	4	WASHER, SPRING, Belleville, M8,
16	9706690	8	NUT, M8, Cl 8,
17	140016	4	WASHER, M8 x 16 x 1.6,
18	120104	8	SCREW, Hex, M8 x 20, 8.8,
19	84980660	1	SUPPORT,
20	412650	8	WASHER, Belleville, M8,
21	84980358	1	SHAFT,
22	87368289	1	TUBE, ELEVATOR,
23	84980646	1	AUGER, , STANDARD
23	84981144	1	AUGER, , REINFORCED
24	87521929	1	AUGER, , STANDARD
24	87522479	1	AUGER, , REINFORCED
25	84980399	1	AUGER,

16.204(A 01) GRAINTANK SHIELDS, LH

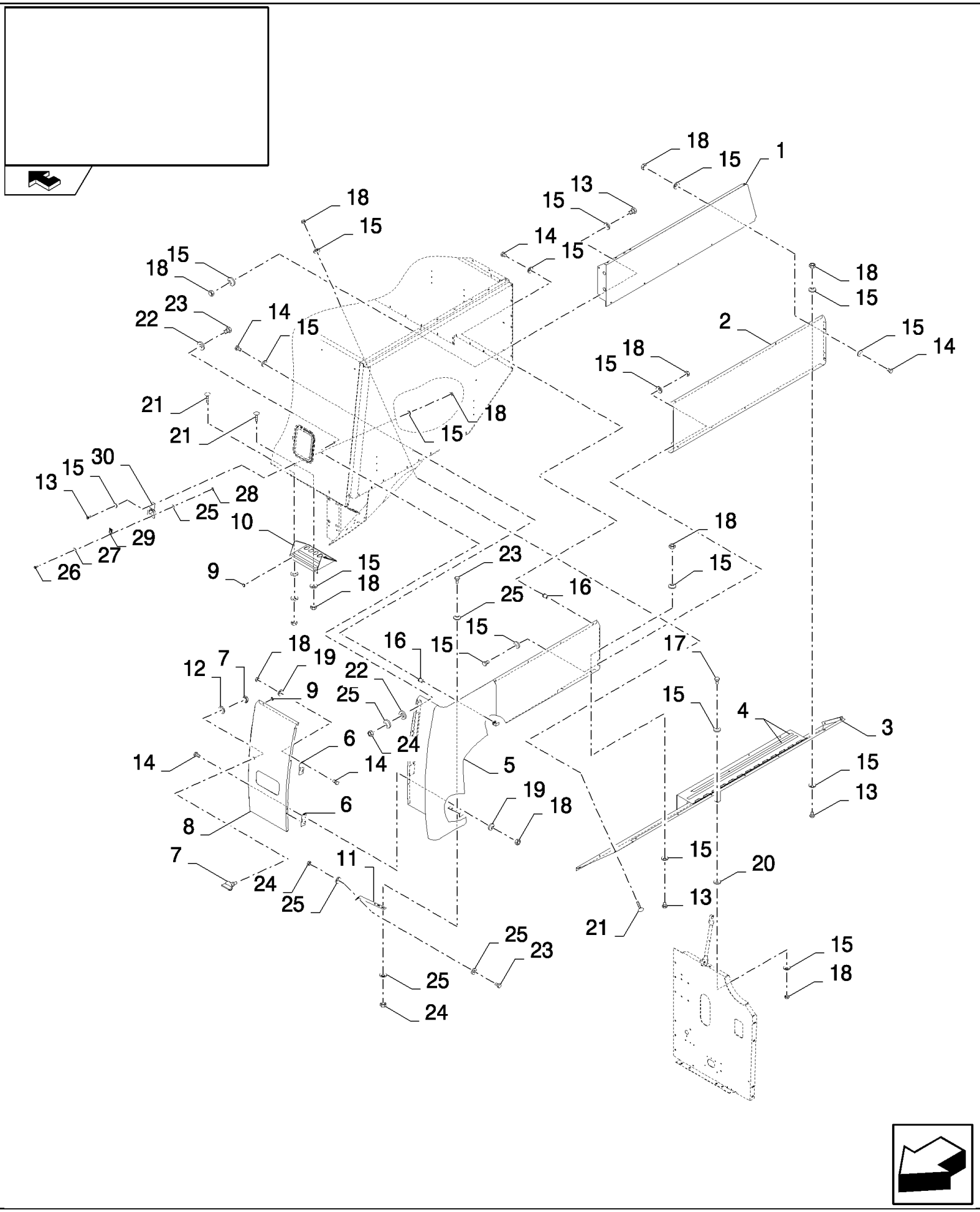

CSX7080 C659 - COMBINE (9/06-8/08)

16.204(A 01) GRAINTANK SHIELDS, LH

ссылка	Номер детали	Кол-во	Описание
1	84983313	1	SHIELD,
1	84448655	1	SHIELD, , FOR LATERALE ONLY
2	84446956	1	SHIELD,
3	84983364	1	SHIELD,
3	87686830	1	TUBE, RIGID, , FOR LATERALE ONLY
4	401519	AR	STRIP, ANTI-SKID, L=3.06M
5	84444482	1	SHIELD,
5	87584749	1	SHIELD, , FOR LATERALE ONLY
6	84071391	2	HINGE,
7	9705390	1	LATCH,
8	87399753	1	DOOR,
9	331233	2	PLUG,
10	84437563	1	STEP,
11	84444822	1	REINFORCEMENT, , BSN C615
11	87675214	1	REINFORCEMENT, , ASN D616
12	20347	1	WASHER, LOCK, Int Tooth, 3/4",
13	86508568	12	SCREW, Hex, M6 x 16, 8.8,
14	120100	18	BOLT, Hex, M6 x 20, 8.8,
15	412649	46	WASHER, SPRING, Belleville, M6,
16	740622	9	NUT,
17	86977786	1	BOLT, Hex, M6 x 25, 8.8,
18	9706755	31	NUT, M6, Cl 8,
19	322357	8	WASHER, SPRING, Belleville, M6,
20	9824259	3	WASHER, M6 x 12 x 1.6,
21	9706703	5	BOLT, CARRIAGE, Short NK, M6 x 20, Cl8.8, Full Thd, , BSN C551
21	374891	5	BOLT, CARRIAGE, Short NK, M6 x 25, Cl8.8, Full Thd, , ASN D552
22	86511315	4	WASHER, M8 x 16 x 1.6,
23	120104	5	SCREW, Hex, M8 x 20, 8.8,
24	9706690	5	NUT, M8, Cl 8,
25	412650	8	WASHER, Belleville, M8,
26	385683	2	BOLT, Hex, M4 x 10, 8.8, Full Thd,
27	322355	4	WASHER, Belleville, M4,
28	100012	2	NUT, M4, Cl 8,
29	9840986	1	CLIP,
30	87518100	1	, BSN C515
30	87559589	1	PLATE, , ASN D516

16.205(01) UNLOADING AUGER

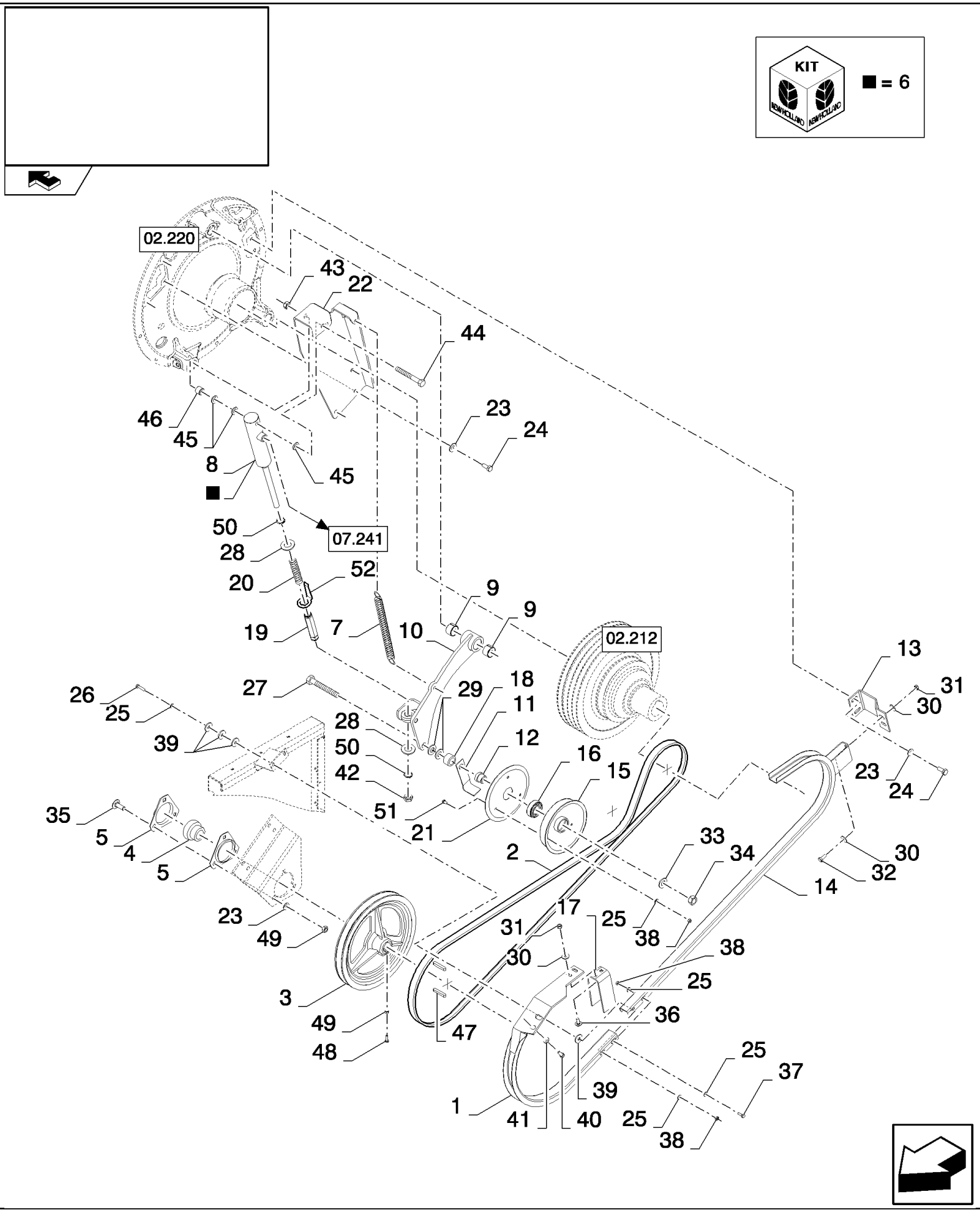

CSX7080 C659 - COMBINE (9/06-8/08)

16.205(01) UNLOADING AUGER

ссылка	Номер детали	Кол-во	Описание
1	84980400	1	GUIDE,
2	84462590	1	BELT,
3	84980361	1	PULLEY,
4	322360	1	BEARING, BALL,
5	84814939	2	FLANGE,
6	87335354	1	
7	180039	1	SPRING, , BSN C619
7	87750019	1	SPRING, , ASN D620
8	87333967	1	HYDRAULIC CYLINDER, (6)
9	420434	2	BUSHING,
10	84462710	1	ARM,
11	9832196	1	
12	441111	1	BUSHING,
13	84980535	1	BRACKET,
14	84980401	1	GUIDE,
15	9839871	1	HALF-PULLEY,
16	443898	1	BEARING, BALL,
17	84980402	1	BRACKET,
18	87364197	1	BUSHING,
19	84462717	1	ADJUSTER, , BSN C559
19	87602781	1	ADJUSTER, , ASN D560
20	435967	1	SPRING,
21	330737	1	HALF-PULLEY,
22	84462718	1	PLATE,
23	140045	6	WASHER, SPRING, Belleville, M10,
24	43139	3	SCREW, Hex, M10 x 25, 8.8, Full Thd,
25	322357	11	WASHER, SPRING, Belleville, M6,
26	43117	2	BOLT, Hex, M6 x 30, 8.8,
27	120093	1	BOLT, Hex, M16 x 80, 8.8,
28	84000320	2	WASHER,
29	140090	2	WASHER,
30	412650	6	WASHER, Belleville, M8,
31	9706690	4	NUT, M8, Cl 8,
32	120104	2	SCREW, Hex, M8 x 20, 8.8,
33	140048	1	WASHER, SPRING, Belleville, M16,
34	100020	1	NUT, M16, Cl 8,
35	338949	3	BOLT, CARRIAGE, Short NK, M10 x 25, Cl8.8, Full Thd, BOLT, CARRIAGE, Short NK, M10 x 25, Cl8.8, Full Thd
36	86507486	2	BOLT, CARRIAGE, Short NK, M8 x 20, Cl8.8, Full Thd,
37	120100	2	BOLT, Hex, M6 x 20, 8.8,
38	9706755	7	NUT, M6, Cl 8,
39	140040	4	WASHER, M6 x 22 x 2,
40	43127	2	BOLT, Hex, M8 x 25, 8.8,
41	322358	2	WASHER, SPRING, Belleville, M8,

16.205(01) UNLOADING AUGER

ссылка	Номер детали	Кол-во	Описание
42	364164	1	NUT, Thin, M16 x 1.5, Cl 04,
43	100038	1	NUT, M12 x 1.75, Cl 8,
44	374887	1	SCREW, Hex, M12 x 100, 8.8,
45	86511324	3	WASHER, M12 x 24 x 2.5,
46	84073698	1	BUSHING,
47	170010	2	KEY,
48	43140	1	BOLT, Hex, M10 x 30, 8.8, Full Thd,
49	100016	4	NUT, M10, Cl 8,
50	370001	2	RING, SNAP, M22, Ext, , BSN C559
50	87599603	2	CIRCLIP, , ASN D560
51	86508568	3	SCREW, Hex, M6 x 16, 8.8,
52	87728614	1	INDICATOR, , ASN D620

16.206(01) UNLOADING AUGER - C599

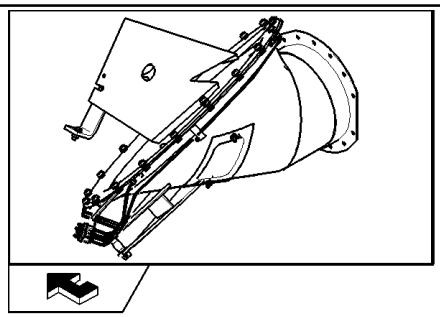

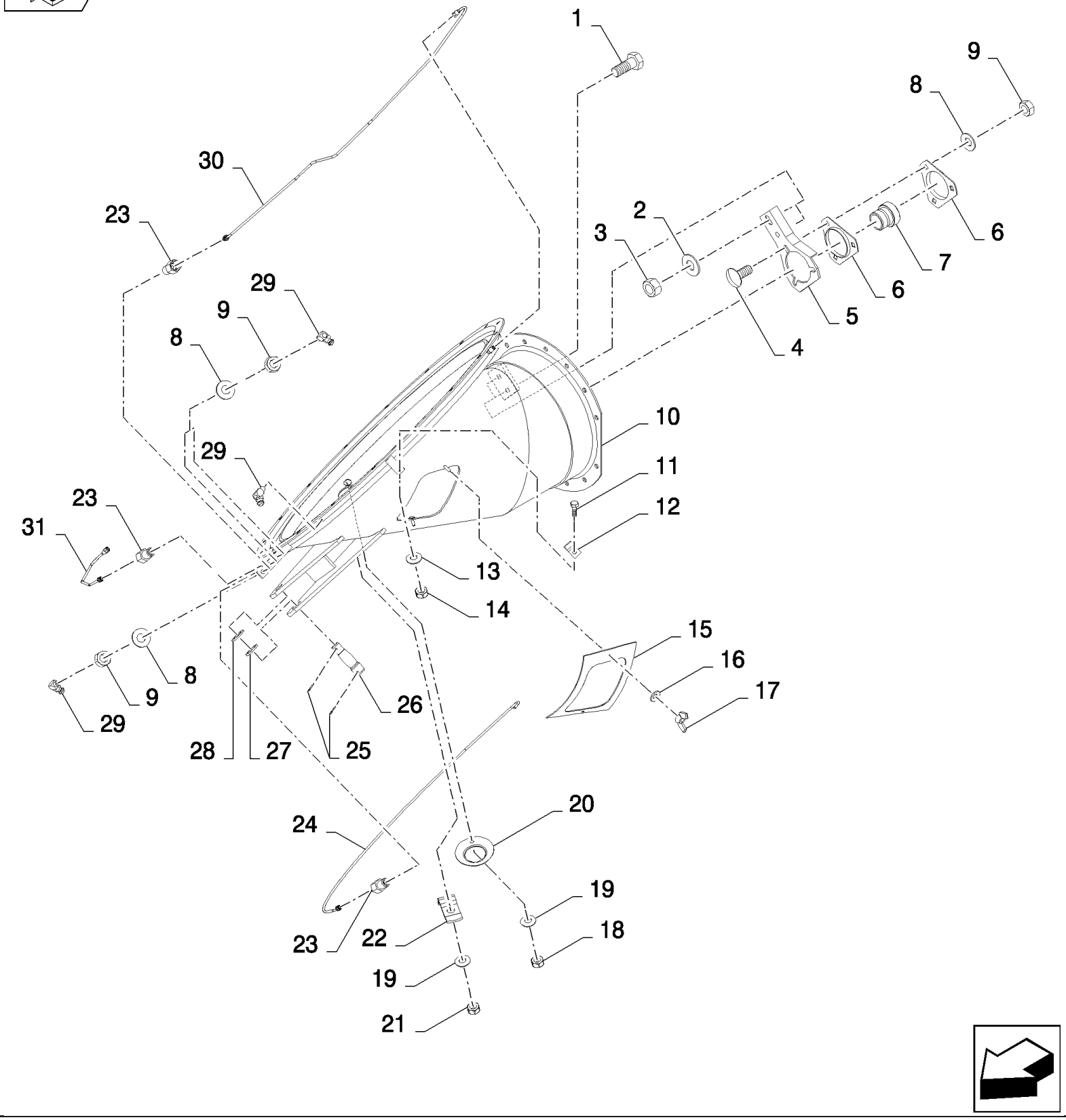

CSX7080 C659 - COMBINE (9/06-8/08)

16.206(01) UNLOADING AUGER - C599

ссылка	Номер детали	Кол-во	Описание
1	9706687	2	SCREW, Hex, M12 x 30, 8.8,
2	140046	2	WASHER, Belleville, M12,
3	9706685	2	NUT, M12, Cl 8,
4	338949	3	BOLT, CARRIAGE, Short NK, M10 x 25, Cl8.8, Full Thd,
5	84814936	1	PLATE,
6	84814939	2	FLANGE,
7	84814912	1	BEARING, BALL,
8	140045	6	WASHER, SPRING, Belleville, M10,
9	100016	6	NUT, M10, Cl 8,
10	84983367	1	ELBOW,
11	385683	2	BOLT, Hex, M4 x 10, 8.8, Full Thd,
12	84814932	2	CLAMP,
13	322355	2	WASHER, Belleville, M4,
14	100012	2	NUT, M4, Cl 8,
15	84983368	1	COVER,
16	322357	2	WASHER, SPRING, Belleville, M6,
17	84814892	2	NUT, WING, M6 x 1,
18	412250	1	NUT, LOCK, M8 x 1.25, Cl 8,
19	322358	2	WASHER, SPRING, Belleville, M8,
20	429855	1	COVER,
21	9706690	1	NUT, M8, Cl 8,
22	425093	1	CLIP,
23	84817004	3	CONNECTOR, HYD.,
24	84439904	1	TUBE,
25	130011	2	PIN, SPLIT (COTTER), M5 x 40,
26	916105	1	PIN,
27	916107	1	WASHER, 35 OD x 25.5 ID x 4 mm Thick
28	140021	1	WASHER, M20 x 37 x 3,
29	323713	4	NIPPLE, LUBE,
30	84439906	1	TUBE,
31	84439905	1	TUBE,

16.206(A 01) UNLOADING AUGER - FOR LATERALE ONLY

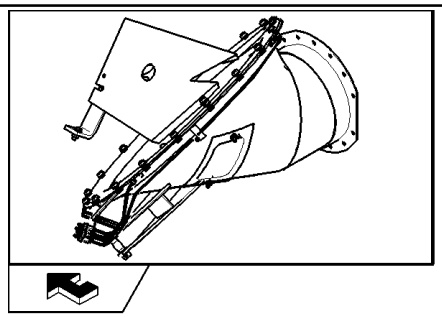

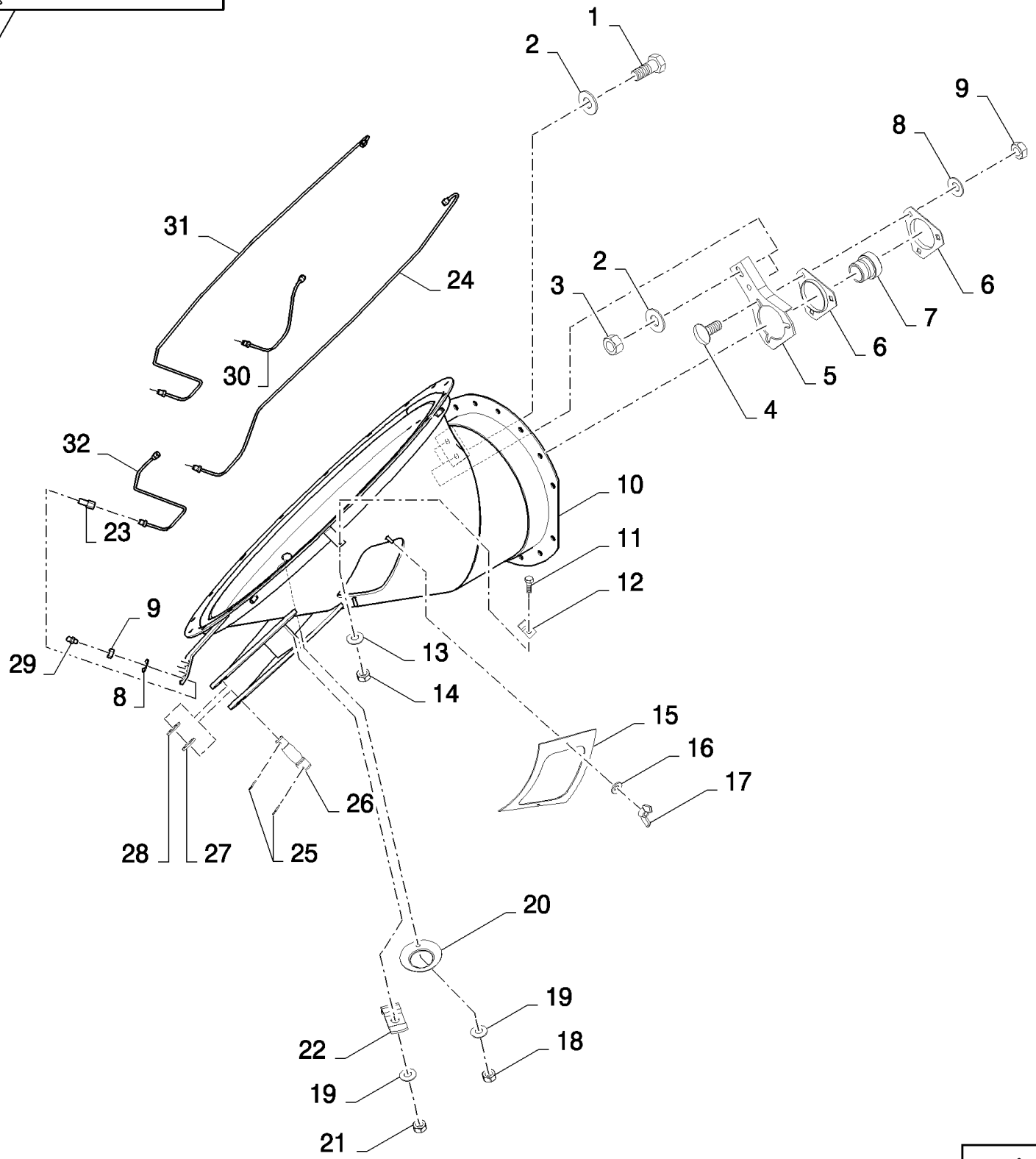

CSX7080 C659 - COMBINE (9/06-8/08)

16.206(A 01) UNLOADING AUGER - FOR LATERALE ONLY

ссылка	Номер детали	Кол-во	Описание
1	300388	2	SCREW, Hex, M12 x 25, 8.8,
2	140046	4	WASHER, Belleville, M12,
3	9706685	2	NUT, M12, Cl 8,
4	338949	3	BOLT, CARRIAGE, Short NK, M10 x 25, Cl8.8, Full Thd,
5	84814936	1	PLATE,
6	84814939	2	FLANGE,
7	84814912	1	BEARING, BALL,
8	140045	6	WASHER, SPRING, Belleville, M10,
9	100016	6	NUT, M10, Cl 8,
10	87657393	1	ELBOW,
11	385683	2	BOLT, Hex, M4 x 10, 8.8, Full Thd,
12	84814932	2	CLAMP,
13	322355	2	WASHER, Belleville, M4,
14	100012	2	NUT, M4, Cl 8,
15	9812875	1	COVER,
16	322357	2	WASHER, SPRING, Belleville, M6,
17	84814892	2	NUT, WING, M6 x 1,
18	412250	1	NUT, LOCK, M8 x 1.25, Cl 8,
19	322358	2	WASHER, SPRING, Belleville, M8,
20	429855	1	COVER,
21	9706690	1	NUT, M8, Cl 8,
22	425093	1	CLIP,
23	84817004	4	CONNECTOR, HYD.,
24	87659440	1	DUCT,
25	130011	2	PIN, SPLIT (COTTER), M5 x 40,
26	87555444	1	PIN,
27	916107	1	WASHER, 35 OD x 25.5 ID x 4 mm Thick
28	140021	1	WASHER, M20 x 37 x 3,
29	321204	4	NIPPLE, LUBE, M6 x 1, 16mm lg,
30	87659442	1	DUCT,
31	87659436	1	DUCT,
32	87659438	1	DUCT,

16.207(01) UNLOADING AUGER - C599

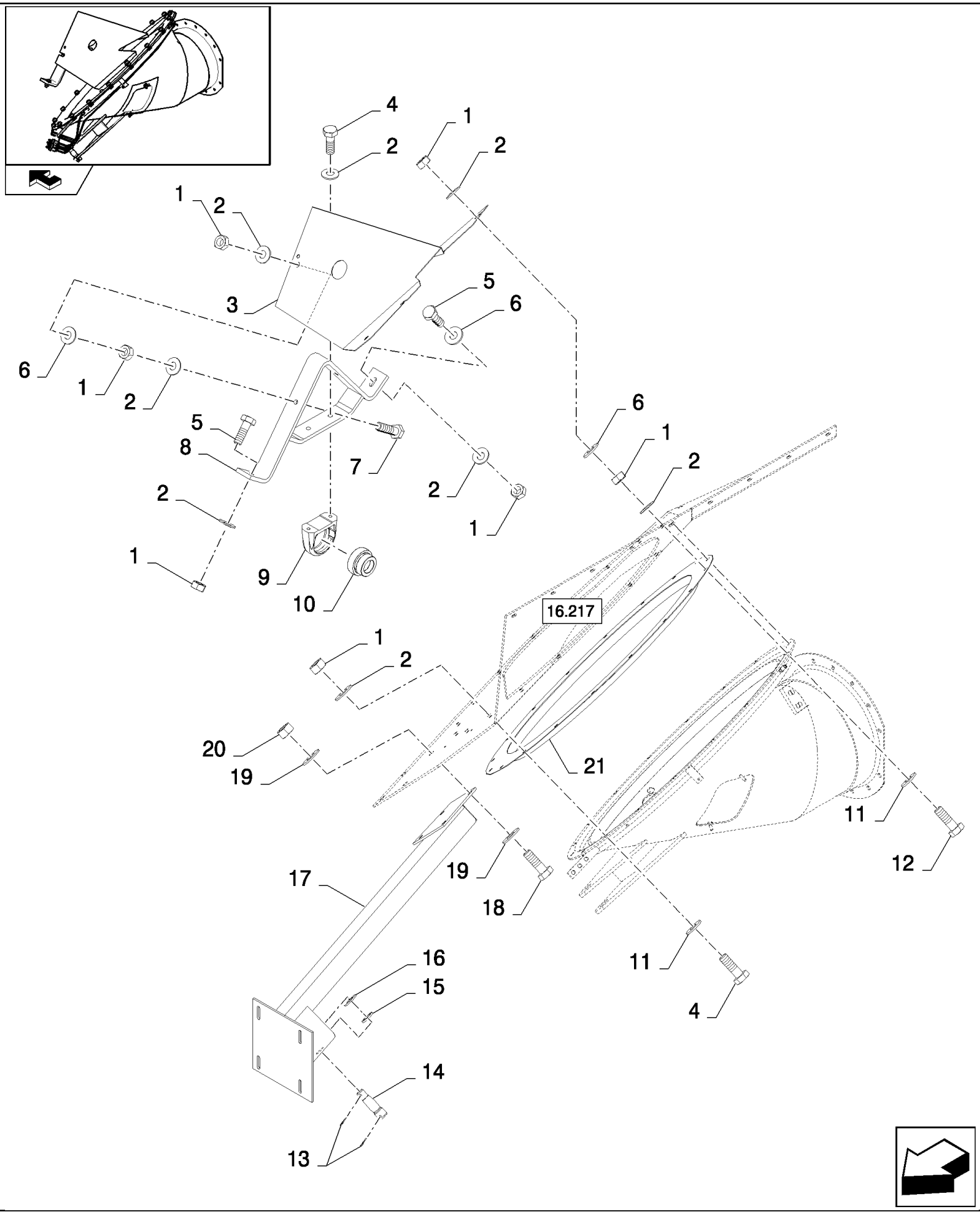

CSX7080 C659 - COMBINE (9/06-8/08)

16.207(01) UNLOADING AUGER - C599

ссылка	Номер детали	Кол-во	Описание
1	100016	27	NUT, M10, Cl 8,
2	140045	29	WASHER, SPRING, Belleville, M10,
3	84980551	1	SHIELD,
4	43139	17	SCREW, Hex, M10 x 25, 8.8, Full Thd, M10x25
5	43140	2	BOLT, Hex, M10 x 30, 8.8, Full Thd,
6	378244	6	WASHER, M10,
7	120068	2	BOLT, Hex, M10 x 40, 8.8, Full Thd,
8	84980403	1	SUPPORT,
9	84980436	1	HOUSING, BEARING,
10	84814912	1	BEARING, BALL,
11	140017	18	WASHER, M10 x 20 x 2,
12	120112	3	BOLT, Hex, M10 x 40, 8.8, Full Thd,
13	130011	2	PIN, SPLIT (COTTER), M5 x 40,
14	916105	1	PIN,
15	916107	1	WASHER, 35 OD x 25.5 ID x 4 mm Thick
16	378247	1	WASHER, 20MM
17	84980540	1	SUPPORT,
18	43167	4	BOLT, Hex, M16 x 30, 8.8, Full Thd,
19	140048	8	WASHER, SPRING, Belleville, M16,
20	100020	4	NUT, M16, Cl 8,
21	84814951	1	RING,

16.207(A 01) UNLOADING AUGER - FOR LATERALE ONLY

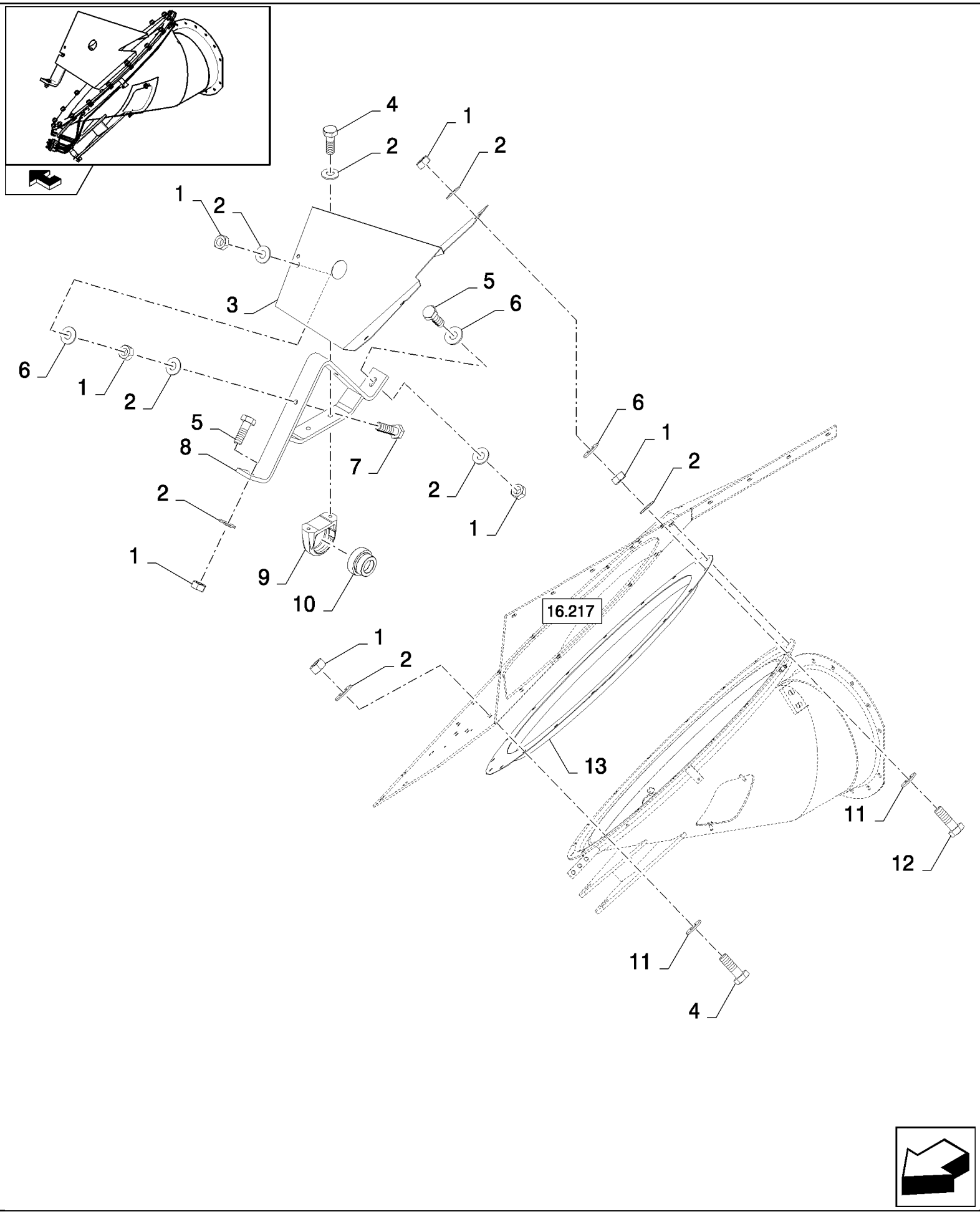

CSX7080 C659 - COMBINE (9/06-8/08)

16.207(A 01) UNLOADING AUGER - FOR LATERALE ONLY

ссылка	Номер детали	Кол-во	Описание
1	100016	27	NUT, M10, Cl 8,
2	140045	30	WASHER, SPRING, Belleville, M10,
3	84980551	1	SHIELD,
4	43139	18	SCREW, Hex, M10 x 25, 8.8, Full Thd, M10x25
5	43140	2	BOLT, Hex, M10 x 30, 8.8, Full Thd,
6	378244	5	WASHER, M10,
7	120068	2	BOLT, Hex, M10 x 40, 8.8, Full Thd,
8	84980403	1	SUPPORT,
9	84980436	1	HOUSING, BEARING,
10	84814912	1	BEARING, BALL,
11	140017	18	WASHER, M10 x 20 x 2,
12	120112	2	BOLT, Hex, M10 x 40, 8.8, Full Thd,
13	84814951	1	RING,

16.208(A 01) GRAIN ELEVATOR - UPPER DRIVE

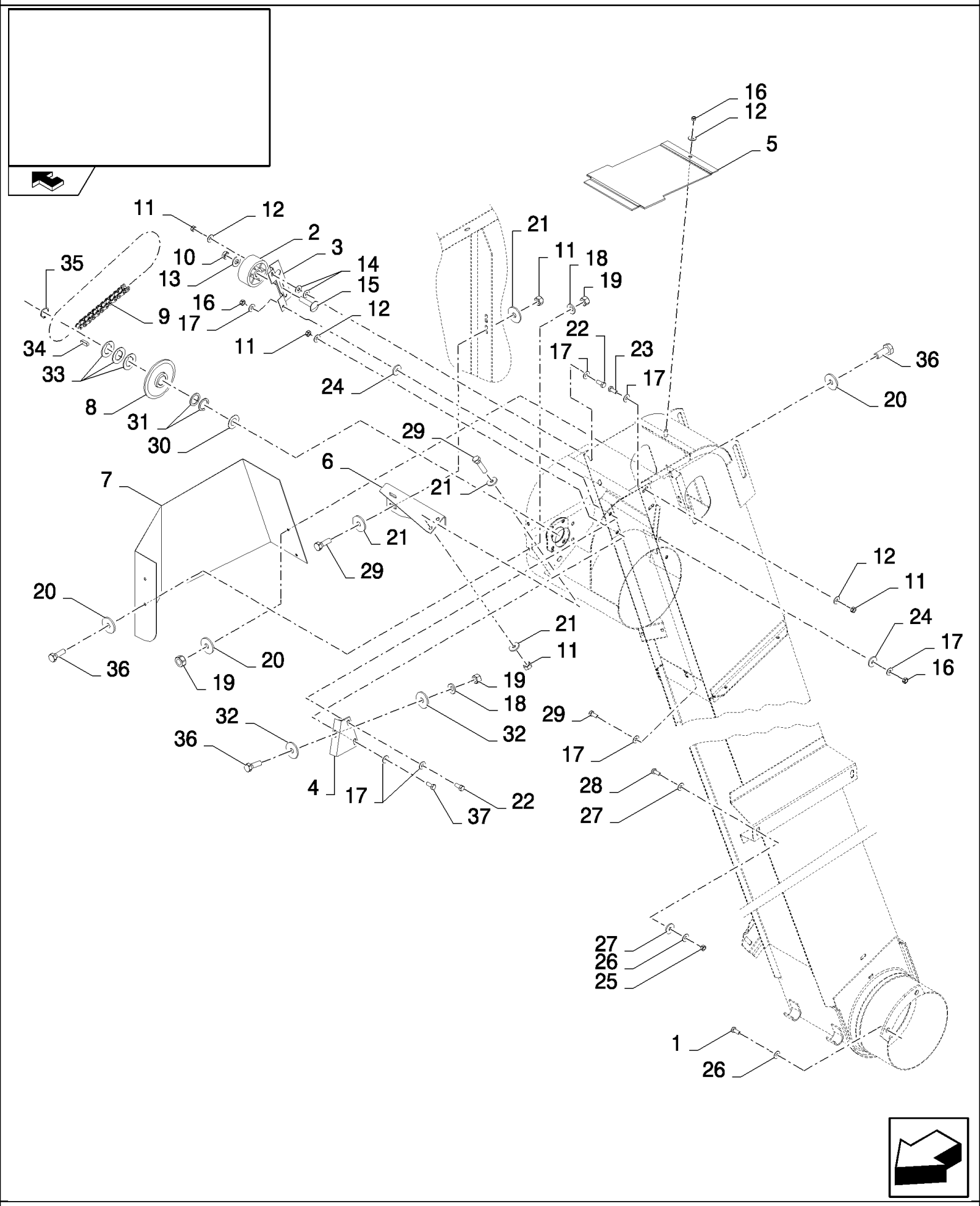

CSX7080 C659 - COMBINE (9/06-8/08)

16.208(A 01) GRAIN ELEVATOR - UPPER DRIVE

ссылка	Номер детали	Кол-во	Описание
1	43138	2	SCREW, Hex, M10 x 20, 8.8, Full Thd,
2	334970	1	PINION, IDLER,
3	84981355	1	SUPPORT, , BSN C614
3	87724432	1	SUPPORT, , ASN D615
4	87520701	1	PLATE,
5	84980404	1	COVER,
6	87520700	1	SUPPORT,
7	84980407	1	PLATE, , BSN C575
7	87520699	1	PLATE, , ASN D576
8	84981030	1	SPROCKET, DRIVEN,
9	592010	1	CHAIN,
10	412126	1	NUT, LOCK, M12 x 1.75, Cl 8,
11	9706690	9	NUT, M8, Cl 8,
12	322358	6	WASHER, SPRING, Belleville, M8,
13	378245	1	WASHER, M12,
14	378243	2	WASHER, M8,
15	334682	1	BOLT, CARRIAGE, Short NK, M12 x 50, Cl8.8, Full Thd, BOLT, CARRIAGE, Short NK, M12 x 50, Cl8.8, Full Thd
16	86629542	3	NUT, LOCK, M8 x 1.25, Cl 8,
17	140016	9	WASHER, M8 x 16 x 1.6,
18	322357	3	WASHER, SPRING, Belleville, M6,
19	353308	5	NUT, M6 x 1, Cl 8,
20	412649	6	WASHER, SPRING, Belleville, M6,
21	412650	8	WASHER, Belleville, M8,
22	43128	2	BOLT, Hex, M8 x 30, 8.8,
23	120103	3	BOLT, Hex, M8 x 16, 8.8,
24	140041	2	WASHER, M8 x 28 x 3,
25	100016	2	NUT, M10, Cl 8,
26	140045	4	WASHER, SPRING, Belleville, M10,
27	140042	4	WASHER, M10 x 34 x 3,
28	43139	2	SCREW, Hex, M10 x 25, 8.8, Full Thd,
29	120104	5	SCREW, Hex, M8 x 20, 8.8,
30	140110	1	WASHER,
31	140108	2	WASHER,
32	86588450	2	WASHER, M6,
33	444974	3	WASHER,
34	170030	1	KEY, M8 x 7 x 32, Par,
35	370003	1	RING, SNAP, M30, Ext,
36	86508568	5	SCREW, Hex, M6 x 16, 8.8,
37	43127	1	BOLT, Hex, M8 x 25, 8.8,

16.208(C 01) GRAIN ELEVATOR, EXTENSIONS

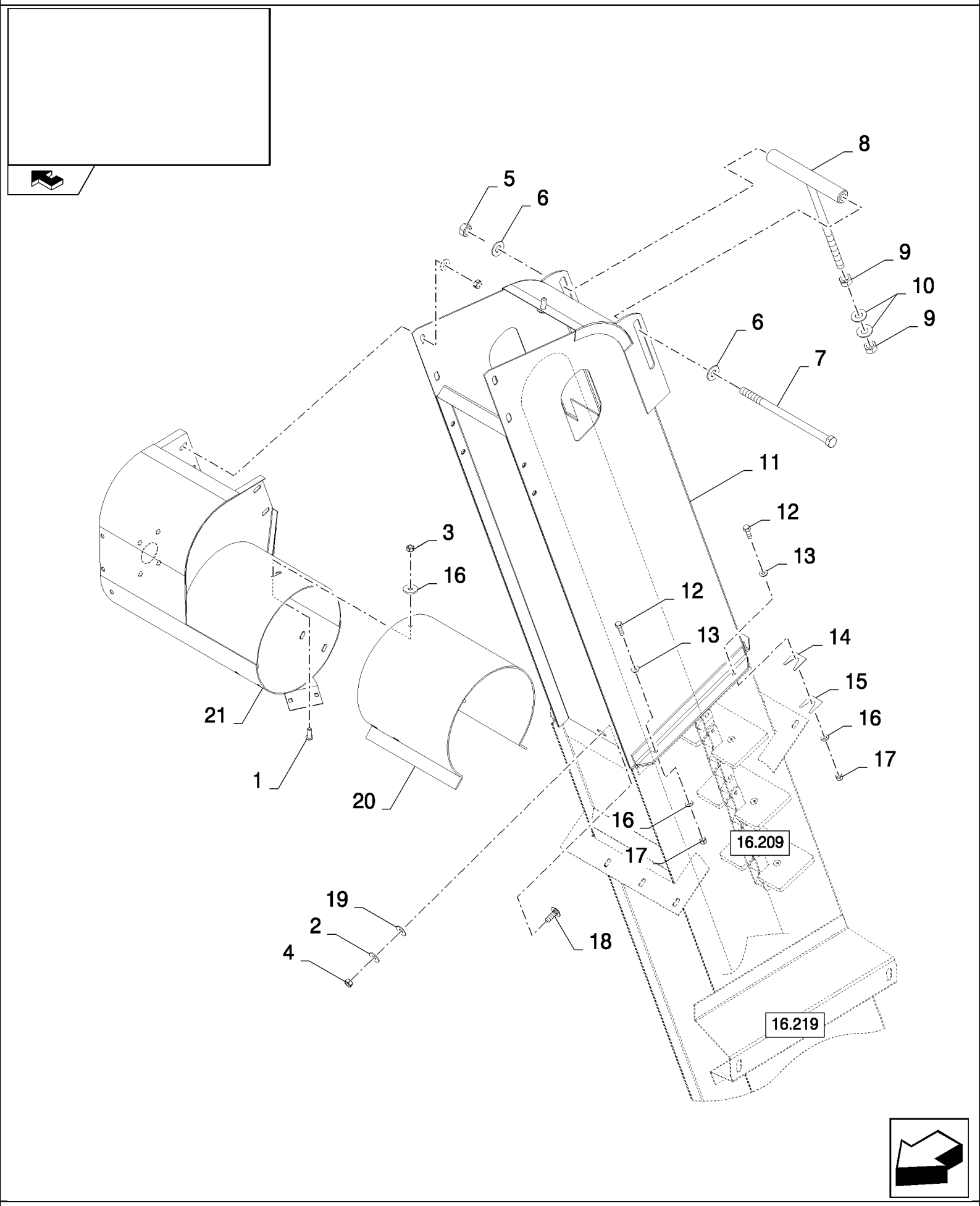

CSX7080 C659 - COMBINE (9/06-8/08)

16.208(C 01) GRAIN ELEVATOR, EXTENSIONS

ссылка	Номер детали	Кол-во	Описание
1	86512439	5	SCREW, Short NK, M6 x 16, Cl8.8, Full Thd,
2	322358	9	WASHER, SPRING, Belleville, M8,
3	9706755	5	NUT, M6, Cl 8,
4	9706690	5	NUT, M8, Cl 8,
5	100038	1	NUT, M12 x 1.75, Cl 8,
6	140046	2	WASHER, Belleville, M12,
7	86571290	1	BOLT, Hex, M12 x 240, 8.8, M12x240
8	84982238	1	TIE-ROD,
9	100020	2	NUT, M16, Cl 8,
10	140048	2	WASHER, SPRING, Belleville, M16,
11	84980378	1	ELEVATOR, EXTENSION, , STANDARD
11	84981124	1	ELEVATOR, EXTENSION, , REINFORCED
12	120100	5	BOLT, Hex, M6 x 20, 8.8,
13	86588450	5	WASHER, M6,
14	80481491	AR	PLATE, ADJUSTING,
15	481489	AR	PLATE, ADJUSTING,
16	322357	5	WASHER, SPRING, Belleville, M6,
17	353308	5	NUT, M6 x 1, Cl 8,
18	86507486	1	BOLT, CARRIAGE, Short NK, M8 x 20, Cl8.8, Full Thd,
19	378243	1	WASHER, M8,
20	84453649	1	EXTENSION,
21	87397198	1	TUBE,

16.209(A 01) GRAIN ELEVATOR CHAIN

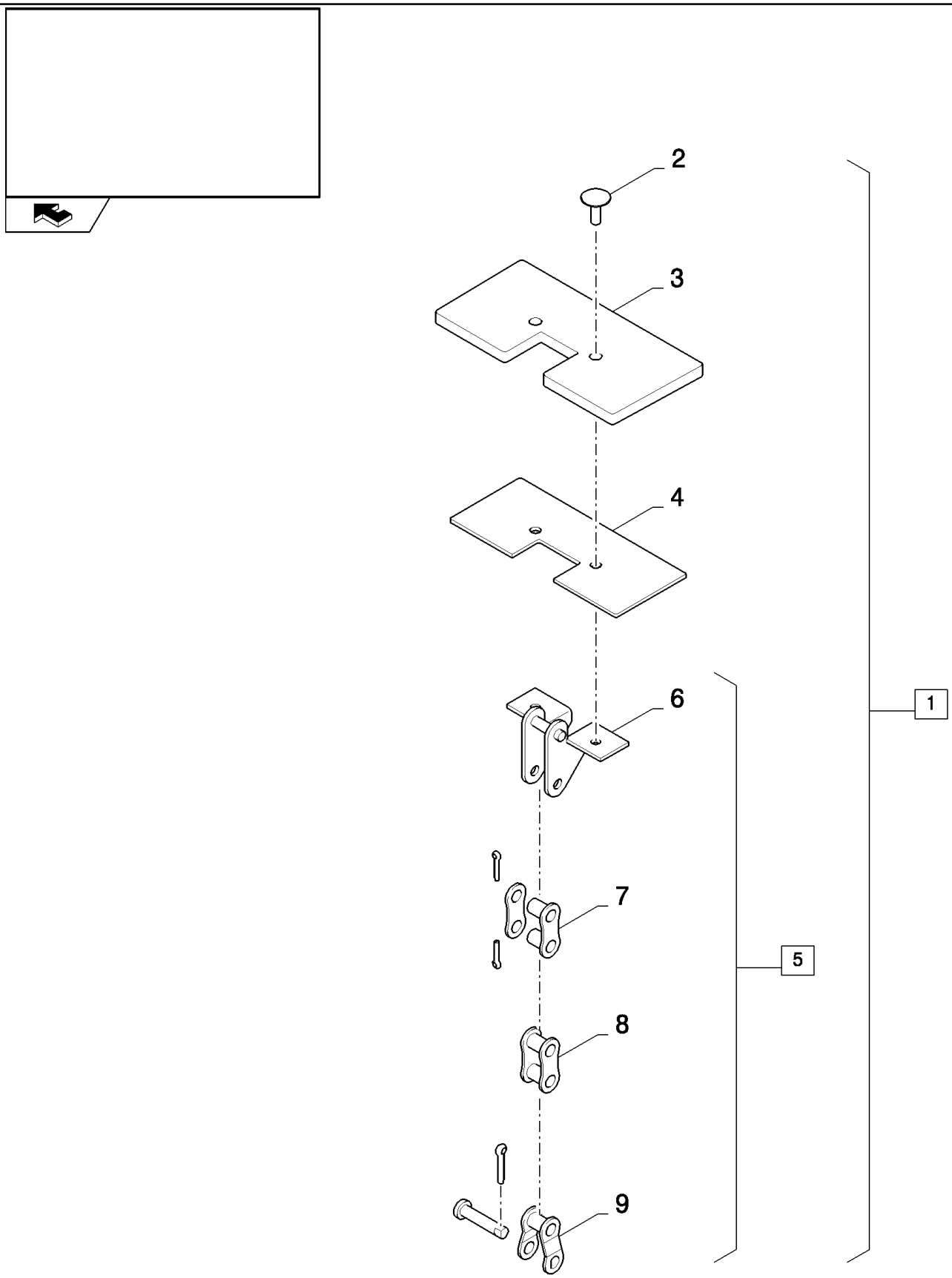

CSX7080 C659 - COMBINE (9/06-8/08)

16.209(A 01) GRAIN ELEVATOR CHAIN

ссылка	Номер детали	Кол-во	Описание
1	84980072	1	CHAIN, (2 to 9), BSN C659
1	87756008	1	CHAIN, , ASN D660
2	84004839	82	RIVET,
3	9835453	41	FLIGHT, RUBBER,
4	84015241	41	PLATE, , BSN C659
4	87755617	41	PLATE, MOUNTING, , ASN D660
5	84981580	1	CHAIN, (6 to 9), BSN C659
5	87756004	1	CHAIN, , ASN D660
6	84017435	41	LINK, CONNECTING, , BSN C659
6	87756002	41	, ASN D660
7	40241	40	LINK, CONNECTING,
8	86595253	81	LINK, CHAIN,
9	40242	3	LINK, OFFSET,

16.210(01) UNLOADING AUGER

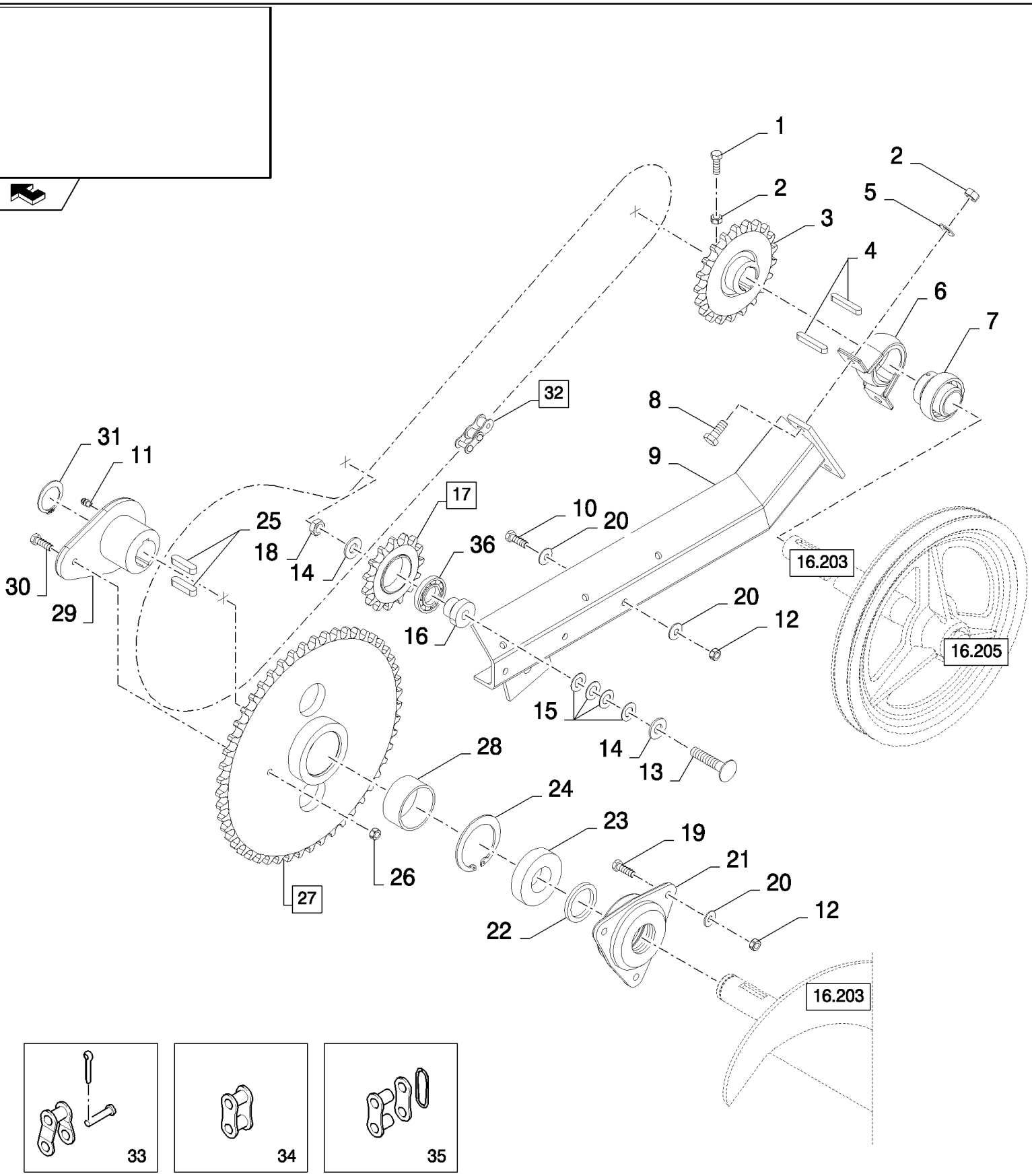

CSX7080 C659 - COMBINE (9/06-8/08)

16.210(01) UNLOADING AUGER

ссылка	Номер детали	Кол-во	Описание
1	43138	1	SCREW, Hex, M10 x 20, 8.8, Full Thd,
2	100016	3	NUT, M10, Cl 8,
3	84981078	1	SPROCKET, DRIVEN,
4	170010	2	KEY,
5	140045	2	WASHER, SPRING, Belleville, M10,
6	80399605	1	HOUSING,
7	84069440	1	BEARING, BALL,
8	43139	2	SCREW, Hex, M10 x 25, 8.8, Full Thd, M10x25
9	84980406	1	SUPPORT,
10	120104	3	SCREW, Hex, M8 x 20, 8.8,
11	321204	1	NIPPLE, LUBE, M6 x 1, 16mm lg,
12	9706690	6	NUT, M8, Cl 8,
13	412097	1	BOLT, CARRIAGE, Short NK, M12 x 60, Cl8.8,
14	378245	2	WASHER, M12,
15	140175	4	WASHER, 13MM
16	84071951	1	BUSHING,
17	84980926	1	SPROCKET, (36)
18	412126	1	NUT, LOCK, M12 x 1.75, Cl 8,
19	43127	3	BOLT, Hex, M8 x 25, 8.8,
20	322358	9	WASHER, SPRING, Belleville, M8,
21	84980468	1	HOUSING, BEARING,
22	220011	1	SEAL,
23	84438926	1	BEARING ASSY,
24	370018	1	RING, SNAP,
25	354775	2	KEY,
26	412250	6	NUT, LOCK, M8 x 1.25, Cl 8,
27	84981079	1	SPROCKET, DRIVEN, (28)
28	9819016	1	BUSHING,
29	84980558	1	HUB,
30	43129	6	BOLT, Hex, M8 x 40, 8.8,
31	370004	1	RING, SNAP, M35, Ext,
32	84981073	1	CHAIN, (33 to 35)
33	86595275	1	LINK, OFFSET,
34	86595251	113	LINK, CHAIN,
35	165590	1	LINK, CONNECTING,
36	34439	1	BEARING, BALL,

16.211(01) UNLOADING AUGER

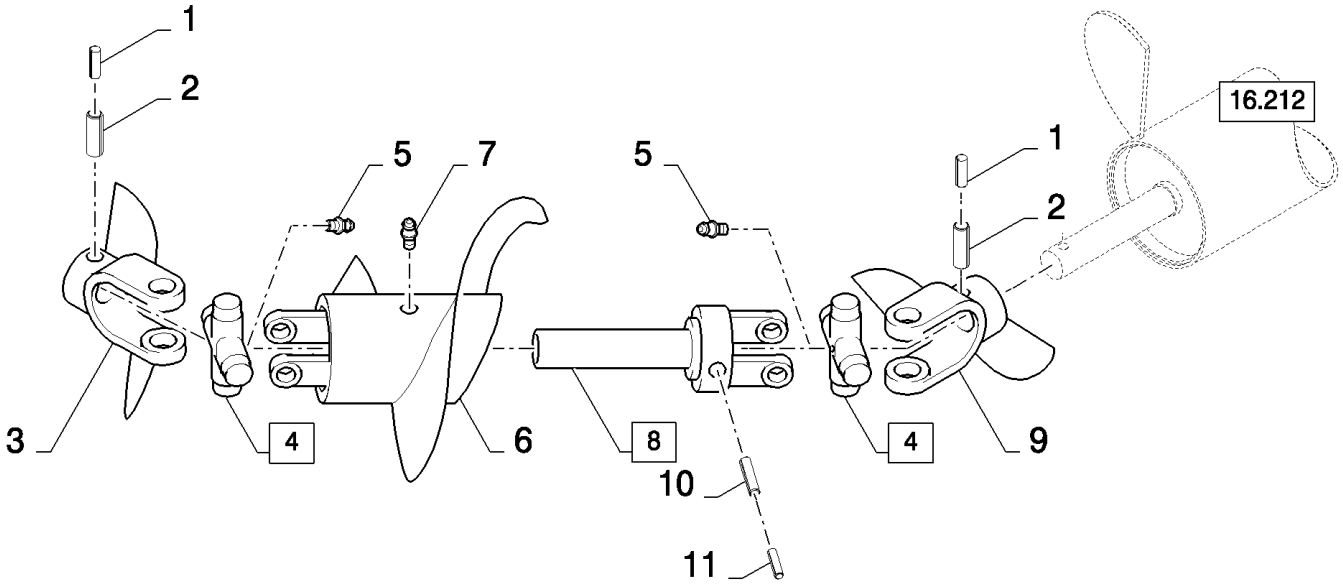

CSX7080 C659 - COMBINE (9/06-8/08)

16.211(01) UNLOADING AUGER

ссылка	Номер детали	Кол-во	Описание
1	412689	2	PIN, LOCK, M8 x 50, Slotted,
2	130054	2	PIN, LOCK, M13 x 55, Slotted,
3	916104	1	YOKE,
4	916025	2	SPIDER, (5)
5	412014	2	NIPPLE, LUBE,
6	920224	1	AUGER,
7	321204	1	NIPPLE, LUBE, M6 x 1, 16mm lg,
8	84817002	1	YOKE, (10, 11)
9	84817003	1	YOKE,
10	62218	1	PIN, LOCK, M10 x 75, Slotted,
11	412050	1	PIN, LOCK, M6 x 75, Slotted,

16.212(A 01) UNLOADING AUGER, FOR 4.65M AND 5.20M ONLY

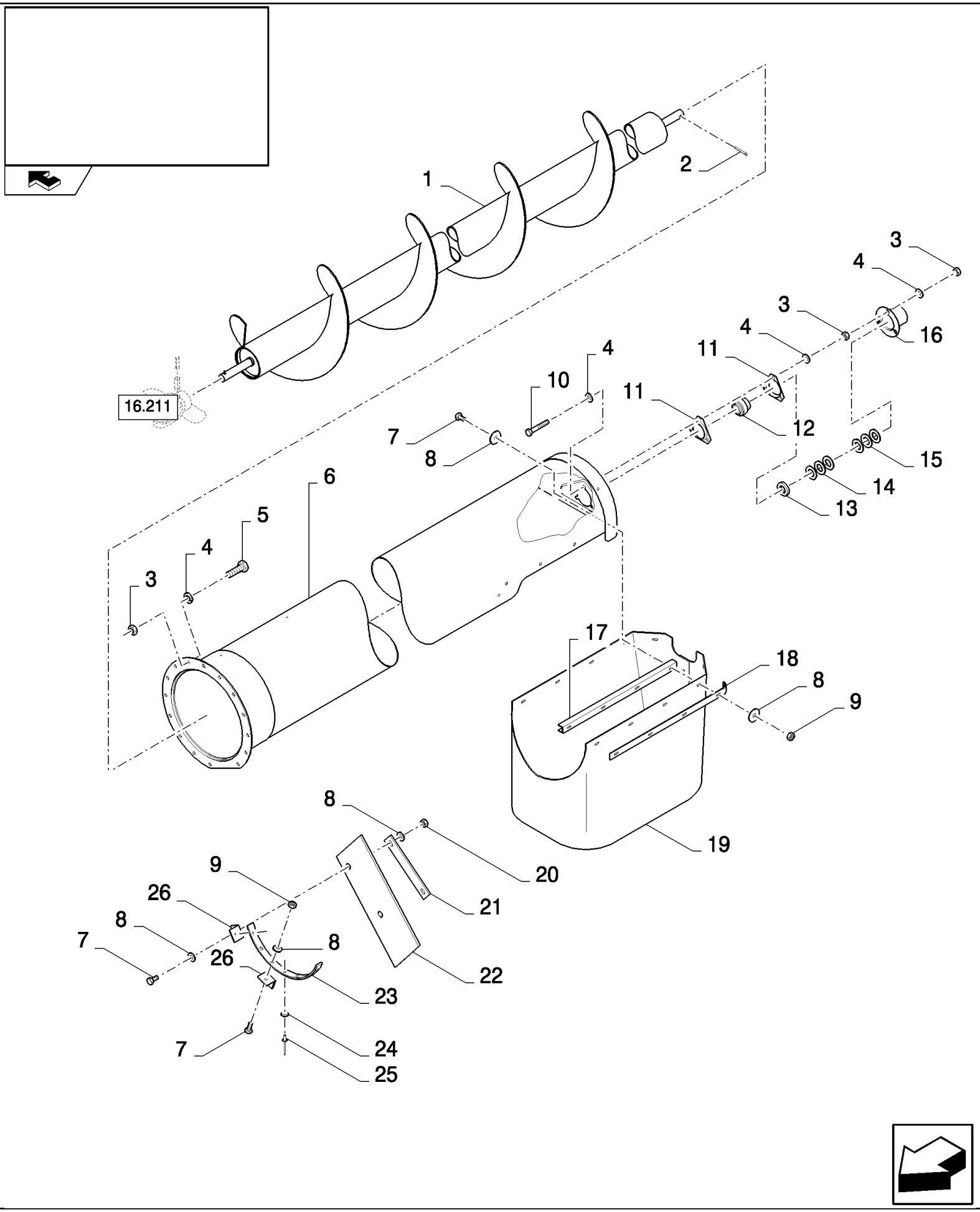

CSX7080 C659 - COMBINE (9/06-8/08)

16.212(A 01) UNLOADING AUGER, FOR 4.65M AND 5.20M ONLY

ссылка	Номер детали	Кол-во	Описание
1	84023189	1	AUGER, , FOR 4.65M ONLY
1	84056827	1	AUGER, , FOR 5.20M ONLY
2	14610270	1	PIN, LOCK, M10 x 45, Slotted,
3	100016	21	NUT, M10, Cl 8,
4	140045	24	WASHER, SPRING, Belleville, M10,
5	43138	15	SCREW, Hex, M10 x 20, 8.8, Full Thd,
6	87515295	1	TUBE, , FOR 4.65M ONLY
6	87515189	1	TUBE, , FOR 5.20M ONLY
7	120100	15	BOLT, Hex, M6 x 20, 8.8,
8	322357	28	WASHER, SPRING, Belleville, M6,
9	9706755	13	NUT, M6, Cl 8,
10	120112	3	BOLT, Hex, M10 x 40, 8.8, Full Thd,
11	86548970	2	FLANGE,
12	325106	1	BEARING ASSY,
13	84814900	1	WASHER,
14	84814901	3	WASHER,
15	441176	3	WASHER, 31MM
16	84807620	1	COVER,
17	84443764	1	SUPPORT,
18	84814934	2	PLATE, FIXING,
19	9811657	1	CANVAS, , BSN C599
19	87572294	1	CANVAS, , ASN D600
20	353308	2	NUT, M6 x 1, Cl 8,
21	84814935	1	PLATE,
22	84814953	1	CANVAS,
23	455862	1	SUPPORT,
24	335872	7	WASHER, 4MM
25	NS	7	NOT SERVICED, Rivet
26	84814930	2	BRACKET,

16.213(01) GRAINTANK - SHIELDS, RH

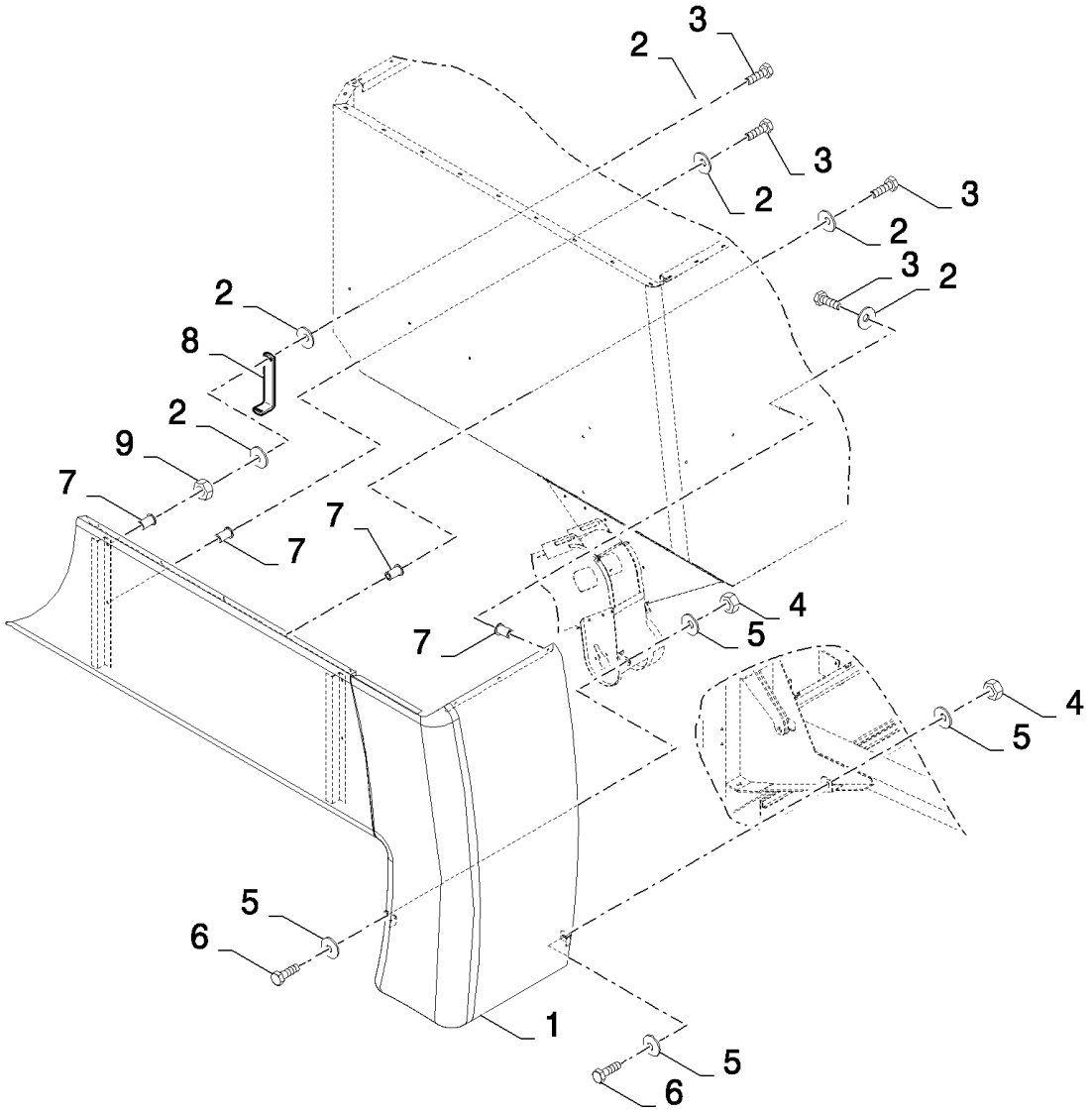

CSX7080 C659 - COMBINE (9/06-8/08)

16.213(01) GRAINTANK - SHIELDS, RH

ссылка	Номер детали	Кол-во	Описание
1	87352074	1	SHIELD,
2	412649	12	WASHER, SPRING, Belleville, M6, , BSN C543
2	412649	14	WASHER, SPRING, Belleville, M6, , ASN D544
3	120100	12	BOLT, Hex, M6 x 20, 8.8,
4	9706690	2	NUT, M8, Cl 8,
5	412650	4	WASHER, Belleville, M8,
6	43127	2	BOLT, Hex, M8 x 25, 8.8,
7	740622	12	NUT,
8	87613722	1	SUPPORT, , ASN D544
9	9706755	1	NUT, M6, Cl 8, , ASN D544

16.215(D 01) GRAINTANK

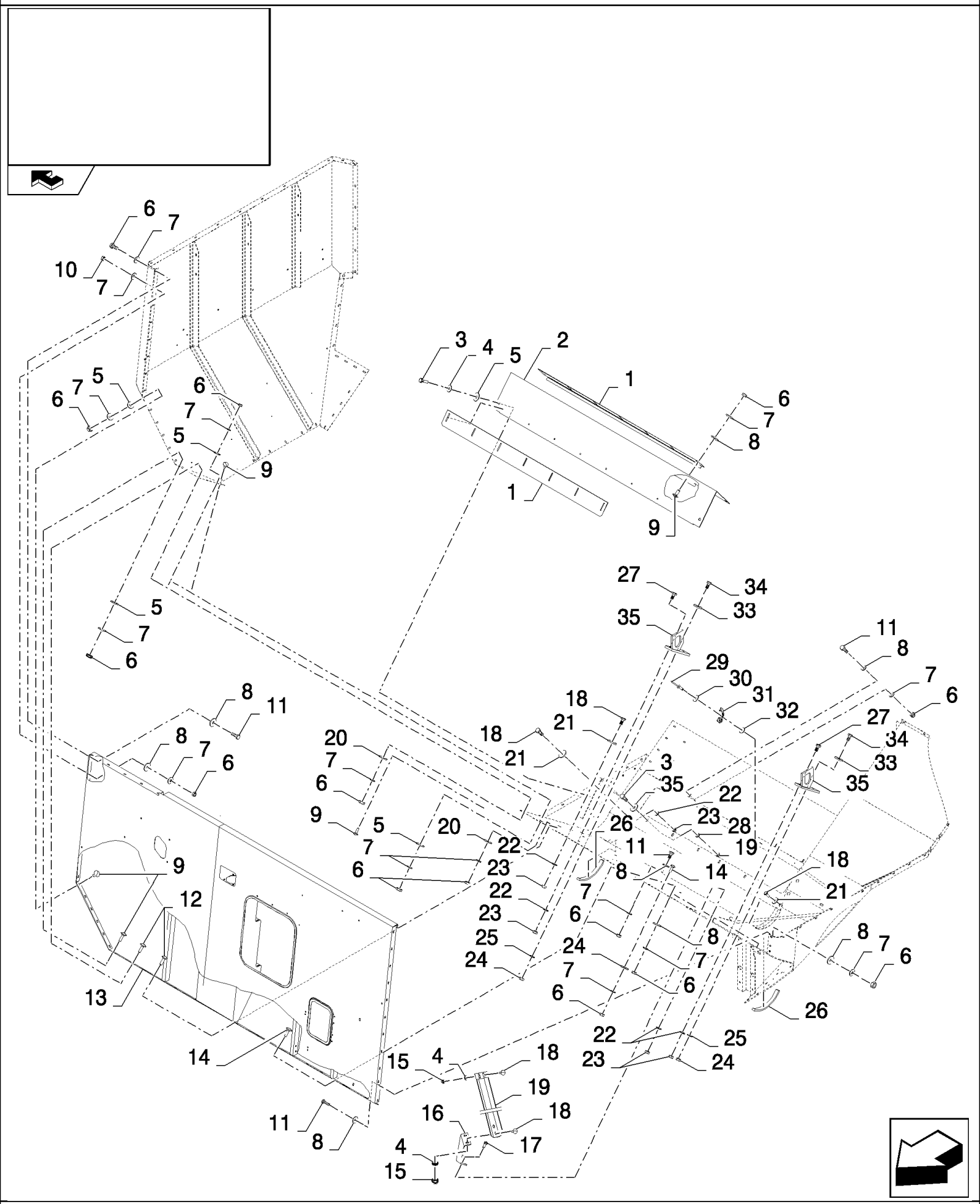

CSX7080 C659 - COMBINE (9/06-8/08)

16.215(D 01) GRAINTANK

ссылка	Номер детали	Кол-во	Описание
1	84980260	2	PLATE,
2	84980259	1	PLATE,
3	120104	9	SCREW, Hex, M8 x 20, 8.8,
4	322358	6	WASHER, SPRING, Belleville, M8,
5	140041	20	WASHER, M8 x 28 x 3,
6	9706755	66	NUT, M6, Cl 8, , BSN C563
6	9706755	69	NUT, M6, Cl 8, , ASN D564
7	412649	74	WASHER, SPRING, Belleville, M6, , BSN C563
7	412649	77	WASHER, SPRING, Belleville, M6, , ASN D564
8	140040	42	WASHER, M6 x 22 x 2,
9	86512439	23	SCREW, Short NK, M6 x 16, Cl8.8, Full Thd,
10	86508568	8	SCREW, Hex, M6 x 16, 8.8,
11	120100	15	BOLT, Hex, M6 x 20, 8.8,
12	9706703	11	BOLT, CARRIAGE, Short NK, M6 x 20, Cl8.8, Full Thd,
13	84983285	1	PLATE,
14	86512441	6	BOLT, CARRIAGE, Short NK, M6 x 30, Cl8.8, Full Thd,
15	86507486	4	BOLT, CARRIAGE, Short NK, M8 x 20, Cl8.8, Full Thd,
16	84447960	1	SUPPORT,
17	84983469	1	SUPPORT,
18	9706687	10	SCREW, Hex, M12 x 30, 8.8,
19	9706690	11	NUT, M8, Cl 8,
20	140016	14	WASHER, M8 x 16 x 1.6,
21	84014353	9	WASHER, LOCK,
22	140046	10	WASHER, Belleville, M12,
23	9706685	10	NUT, M12, Cl 8,
24	100020	2	NUT, M16, Cl 8,
25	140048	2	WASHER, SPRING, Belleville, M16,
26	400908	AR	SEAL, L=0.4M
27	86629541	3	BOLT, Hex, M12 x 40, 8.8, Full Thd,
28	412650	7	WASHER, Belleville, M8,
29	446453	6	RIVET,
30	362785	6	WASHER,
31	362786	6	FASTENER,
32	335872	6	WASHER,
33	333041	2	WASHER,
34	120090	2	SCREW, Hex, M16 x 50, 8.8,
35	87365178	1	HOOK,

16.217(D 01) GRAINTANK

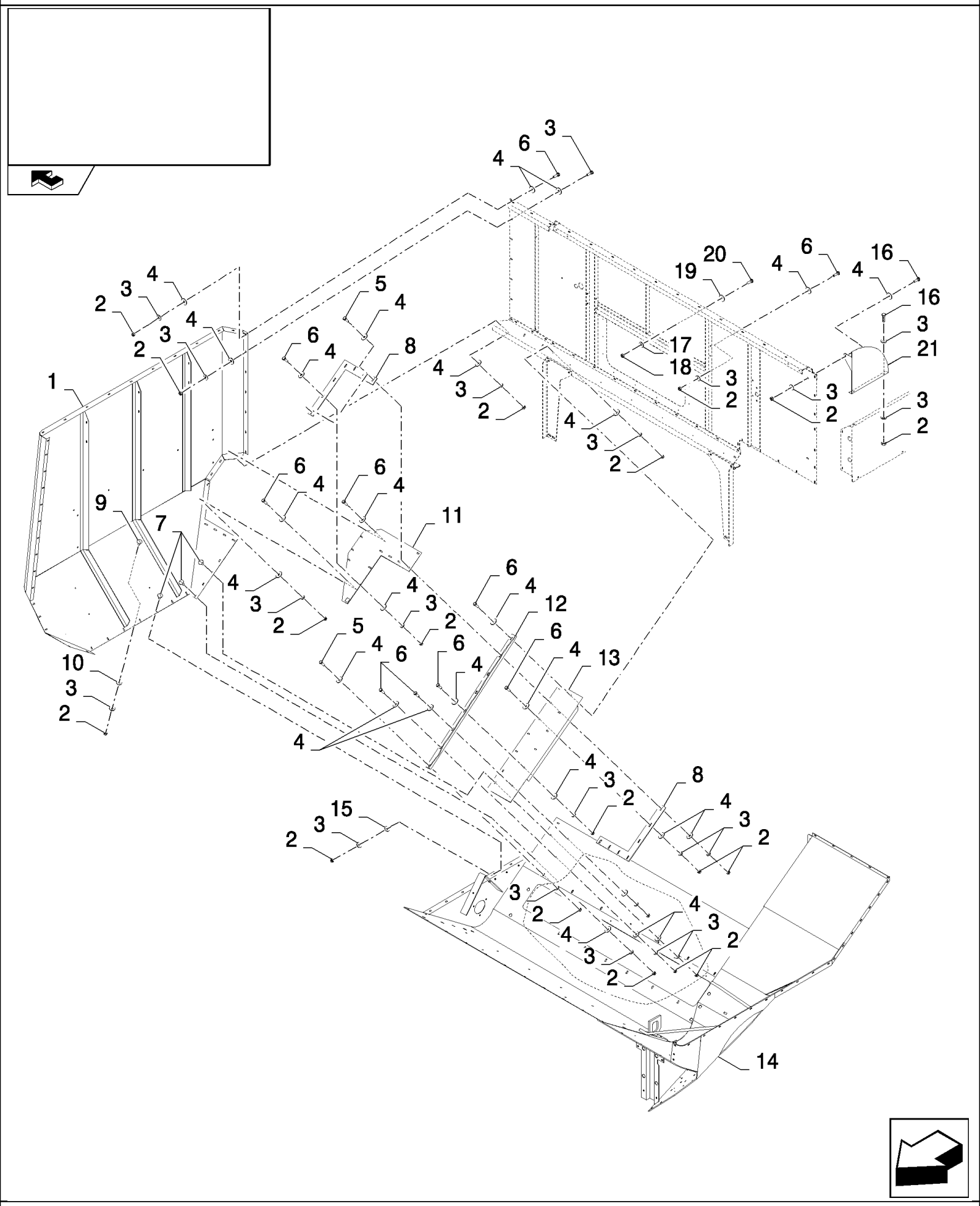

CSX7080 C659 - COMBINE (9/06-8/08)

16.217(D 01) GRAINTANK

ссылка	Номер детали	Кол-во	Описание
1	87517202	1	PANEL, SIDE, RH
2	9706755	47	NUT, M6, Cl 8, , BSN C563
2	9706755	44	NUT, M6, Cl 8, , ASN D564
3	412649	51	WASHER, SPRING, Belleville, M6, , BSN C563
3	412649	48	WASHER, SPRING, Belleville, M6, , ASN D564
4	140040	67	WASHER, M6 x 22 x 2,
5	86977786	3	BOLT, Hex, M6 x 25, 8.8,
6	120100	27	BOLT, Hex, M6 x 20, 8.8,
7	9706703	7	BOLT, CARRIAGE, Short NK, M6 x 20, Cl8.8, Full Thd,
8	84449357	2	PLATE,
9	86512441	2	BOLT, CARRIAGE, Short NK, M6 x 30, Cl8.8, Full Thd,
10	140016	2	WASHER, M8 x 16 x 1.6,
11	87540943	1	PLATE,
12	84980251	1	REINFORCEMENT,
13	84980810	1	PLATE,
14	87366542	1	GRAIN TANK,
15	140041	3	WASHER, M8 x 28 x 3,
16	86508568	8	SCREW, Hex, M6 x 16, 8.8,
17	9706690	3	NUT, M8, Cl 8,
18	322358	3	WASHER, SPRING, Belleville, M8,
19	86511315	3	WASHER, M8 x 16 x 1.6,
20	120104	3	SCREW, Hex, M8 x 20, 8.8,
21	87517151	1	PLATE, SIDE,

16.218(D 01) GRAINTANK

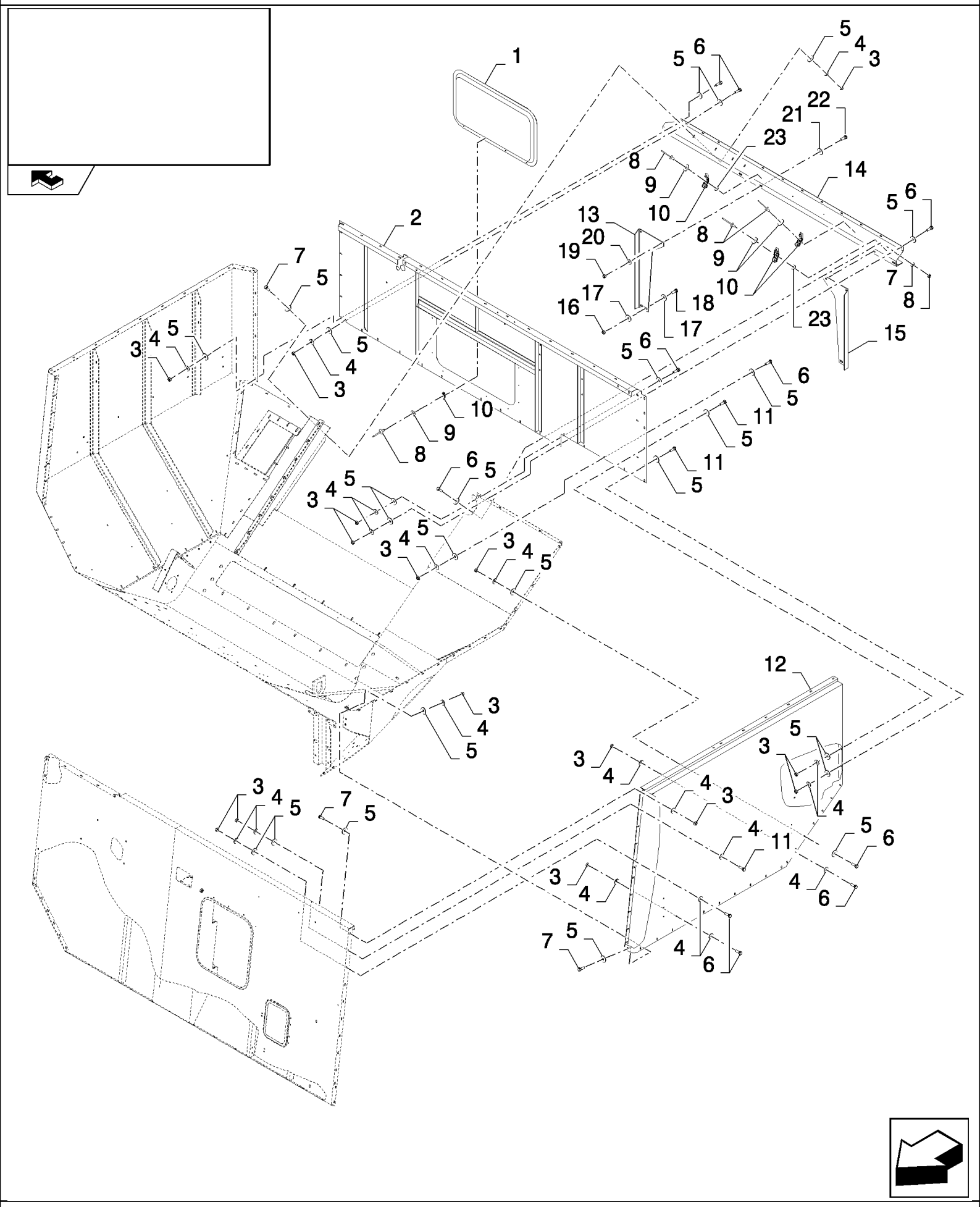

CSX7080 C659 - COMBINE (9/06-8/08)

16.218(D 01) GRAINTANK

ссылка	Номер детали	Кол-во	Описание
1	87517156	1	COVER,
2	87368280	1	PLATE,
3	9706755	60	NUT, M6, Cl 8, , BSN C563
3	9706755	45	NUT, M6, Cl 8, , ASN D564
4	412649	72	WASHER, SPRING, Belleville, M6, , BSN C563
4	412649	63	WASHER, SPRING, Belleville, M6, , ASN D564
5	140040	104	WASHER, M6 x 22 x 2, , BSN C563
5	140040	67	WASHER, M6 x 22 x 2, , ASN D564
6	86508568	35	SCREW, Hex, M6 x 16, 8.8, , BSN C563
6	86508568	23	SCREW, Hex, M6 x 16, 8.8, , ASN D564
7	120100	16	BOLT, Hex, M6 x 20, 8.8,
8	446453	16	RIVET,
9	362785	16	WASHER,
10	362786	16	FASTENER,
11	86977786	9	BOLT, Hex, M6 x 25, 8.8,
12	84983284	1	PANEL, SIDE, LH
13	84980256	1	SUPPORT,
14	84980250	1	SUPPORT, , BSN C543
14	87540942	1	SUPPORT, , ASN D544
15	84980255	1	SUPPORT,
16	9706685	4	NUT, M12, Cl 8,
17	394630	8	WASHER,
18	300389	4	BOLT, Hex, M12 x 35, 8.8, Full Thd,
19	140045	4	WASHER, SPRING, Belleville, M10,
20	100016	4	NUT, M10, Cl 8,
21	140042	4	WASHER, M10 x 34 x 3, , BSN C543
21	140045	4	WASHER, SPRING, Belleville, M10, , ASN D544
22	43140	4	BOLT, Hex, M10 x 30, 8.8, Full Thd,
23	335872	2	WASHER, , BSN C583
23	335872	4	WASHER, , ASN D584

16.219(01) GRAIN ELEVATOR

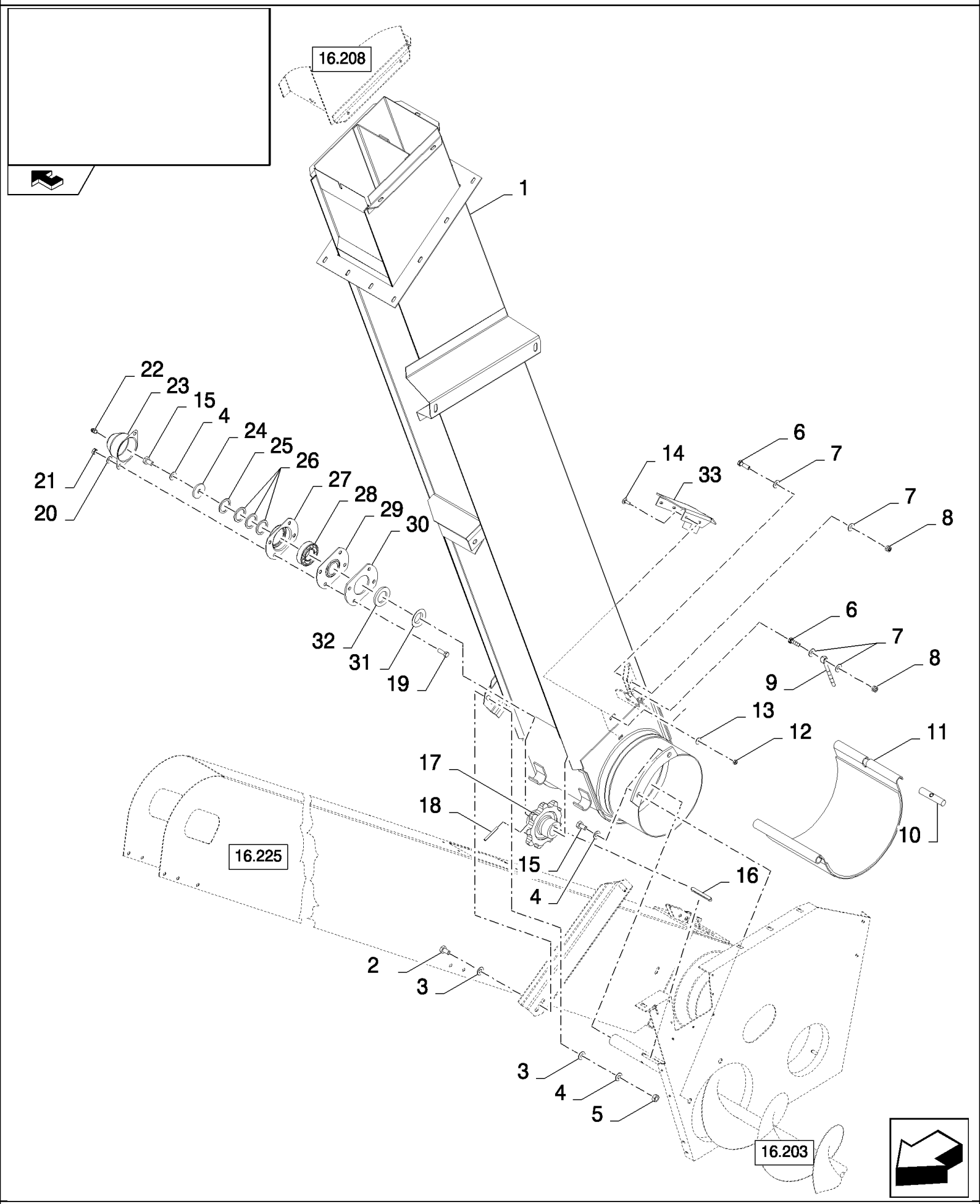

CSX7080 C659 - COMBINE (9/06-8/08)

16.219(01) GRAIN ELEVATOR

ссылка	Номер детали	Кол-во	Описание
1	84449377	1	ELEVATOR, , STANDARD
1	84981132	1	ELEVATOR, , REINFORCED
2	43139	2	SCREW, Hex, M10 x 25, 8.8, Full Thd, M10x25
3	140042	4	WASHER, M10 x 34 x 3,
4	140045	3	WASHER, SPRING, Belleville, M10,
5	100016	2	NUT, M10, Cl 8,
6	43128	2	BOLT, Hex, M8 x 30, 8.8,
7	86511315	4	WASHER, M8 x 16 x 1.6,
8	86629542	2	NUT, LOCK, M8 x 1.25, Cl 8,
9	9811378	1	U-BOLT,
10	9811398	1	ROD,
11	84980514	1	COVER,
11	84982648	1	GUARD, , PERFORATED (LONG HOLES)
12	9706755	4	NUT, M6, Cl 8,
13	412649	4	WASHER, SPRING, Belleville, M6,
14	9706703	4	BOLT, CARRIAGE, Short NK, M6 x 20, Cl8.8, Full Thd,
15	43138	1	SCREW, Hex, M10 x 20, 8.8, Full Thd,
16	354775	1	KEY,
17	84981028	1	SPROCKET, DRIVEN, , BSN C659
17	87724884	1	SPROCKET, , ASN D660
18	333960	1	PIN, LOCK, M6 x 50, Slotted,
19	43127	4	BOLT, Hex, M8 x 25, 8.8,
20	322358	4	WASHER, SPRING, Belleville, M8,
21	9706690	4	NUT, M8, Cl 8,
22	332038	1	NIPPLE, LUBE,
23	310067	1	COVER,
24	140219	1	WASHER, 11MM
25	140109	1	WASHER, 31MM
26	140110	3	WASHER, 31MM
27	9511041	1	FLANGE,
28	210064	1	BEARING ASSY,
29	84814927	1	COVER,
30	84981540	1	FLANGE,
31	310072	1	RING,
32	220062	1	ELEMENT, SEALING,
33	84980686	1	EXTENSION, , STANDARD
33	84981154	1	EXTENSION, , REINFORCED

16.221(01) GRAIN ELEVATOR, UPPER DRIVE

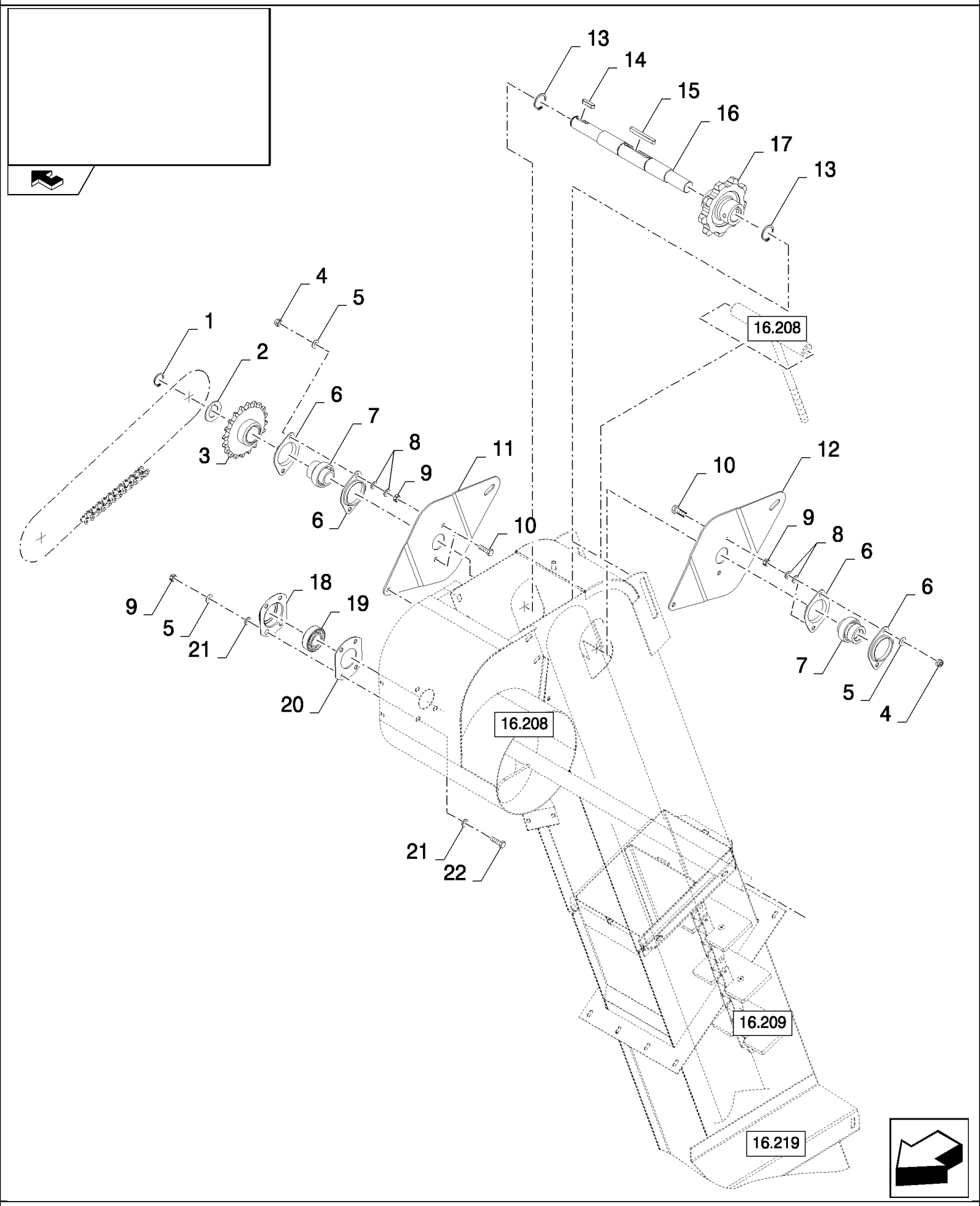

CSX7080 C659 - COMBINE (9/06-8/08)

16.221(01) GRAIN ELEVATOR, UPPER DRIVE

ссылка	Номер детали	Кол-во	Описание
1	370002	1	RING, SNAP, M25, Ext,
2	444976	AR	WASHER,
3	84981212	1	SPROCKET, DRIVEN,
4	86629542	4	NUT, LOCK, M8 x 1.25, Cl 8,
5	322358	8	WASHER, SPRING, Belleville, M8,
6	86548974	4	FLANGE,
7	84992001	2	BEARING ASSY,
8	140016	8	WASHER, M8 x 16 x 1.6,
9	9706690	8	NUT, M8, Cl 8,
10	43128	4	BOLT, Hex, M8 x 30, 8.8,
11	84981356	1	PLATE,
12	84981025	1	PLATE,
13	11068376	2	RING, SNAP, M35, Ext x 1.5 Thk,
14	170030	1	KEY, M8 x 7 x 32, Par,
15	354775	1	KEY,
16	84981299	1	SHAFT,
17	84981028	1	SPROCKET, DRIVEN,
18	9511041	1	FLANGE,
19	210043	1	BEARING, BALL,
20	310085	1	FLANGE,
21	378243	8	WASHER, M8,
22	43127	4	BOLT, Hex, M8 x 25, 8.8,

16.222(01) TAILINGS ELEVATORS

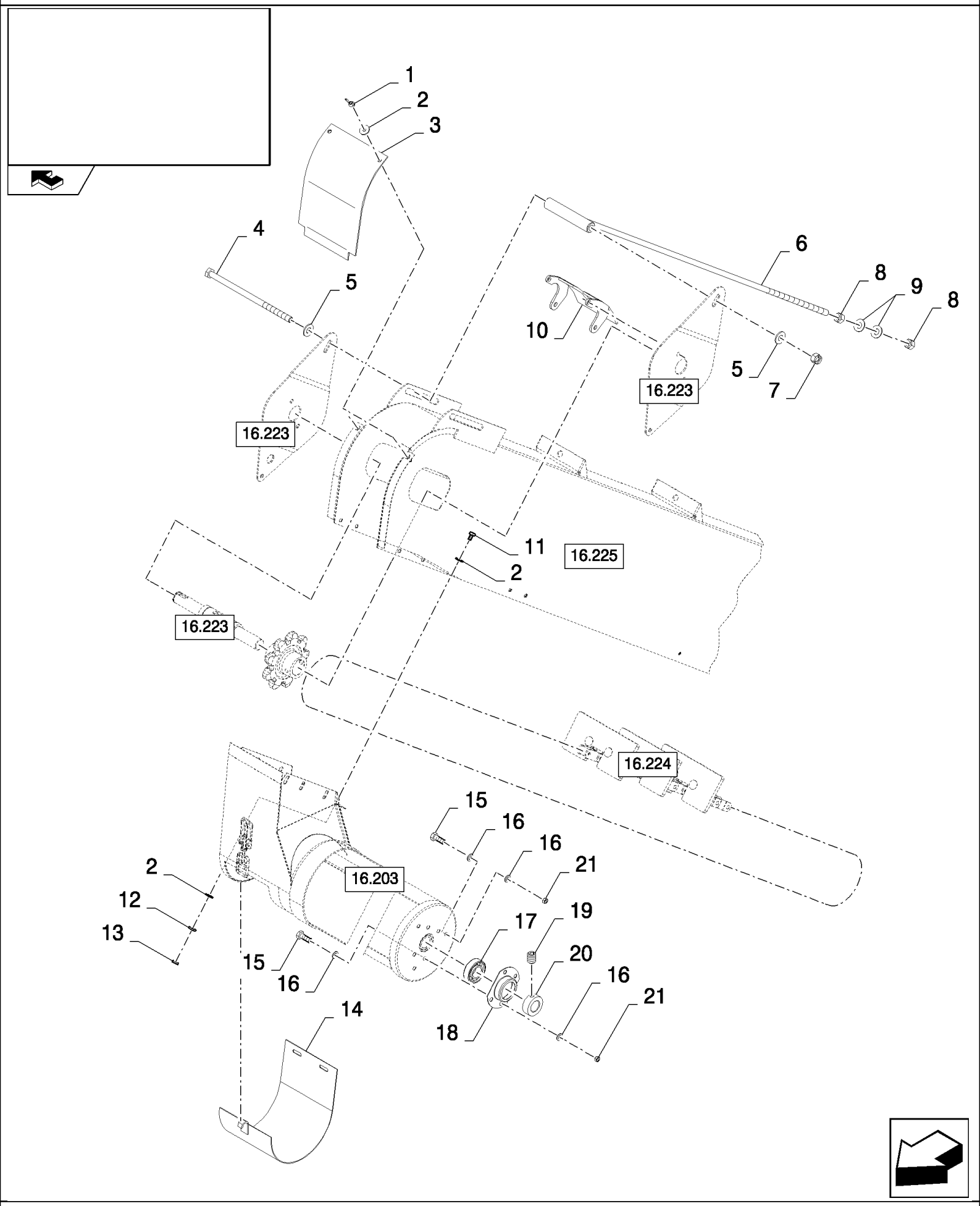

CSX7080 C659 - COMBINE (9/06-8/08)

16.222(01) TAILINGS ELEVATORS

ссылка	Номер детали	Кол-во	Описание
1	84814892	2	NUT, WING, M6 x 1,
2	140040	6	WASHER, M6 x 22 x 2,
3	84980878	1	COVER,
4	380423	1	BOLT, Hex, M12 x 170, 8.8, M12x170
5	140046	2	WASHER, Belleville, M12,
6	84982241	1	TIE-ROD, THREADED,
7	100038	1	NUT, M12 x 1.75, Cl 8,
8	100020	2	NUT, M16, Cl 8,
9	140048	2	WASHER, SPRING, Belleville, M16,
10	84981165	1	PLATE,
11	86508568	2	SCREW, Hex, M6 x 16, 8.8,
12	322357	2	WASHER, SPRING, Belleville, M6,
13	15896221	2	NUT, M6, Cl 10,
14	84980877	1	COVER,
15	120103	11	BOLT, Hex, M8 x 16, 8.8,
16	322358	8	WASHER, SPRING, Belleville, M8,
17	80034439	1	BEARING ASSY,
18	310045	1	FLANGE,
19	300480	1	SET SCREW, Hex Soc, M10 x 12, Cup Pt,
20	300003	1	RING,
21	9706690	4	NUT, M8, Cl 8,

16.223(01) TAILINGS ELEVATORS

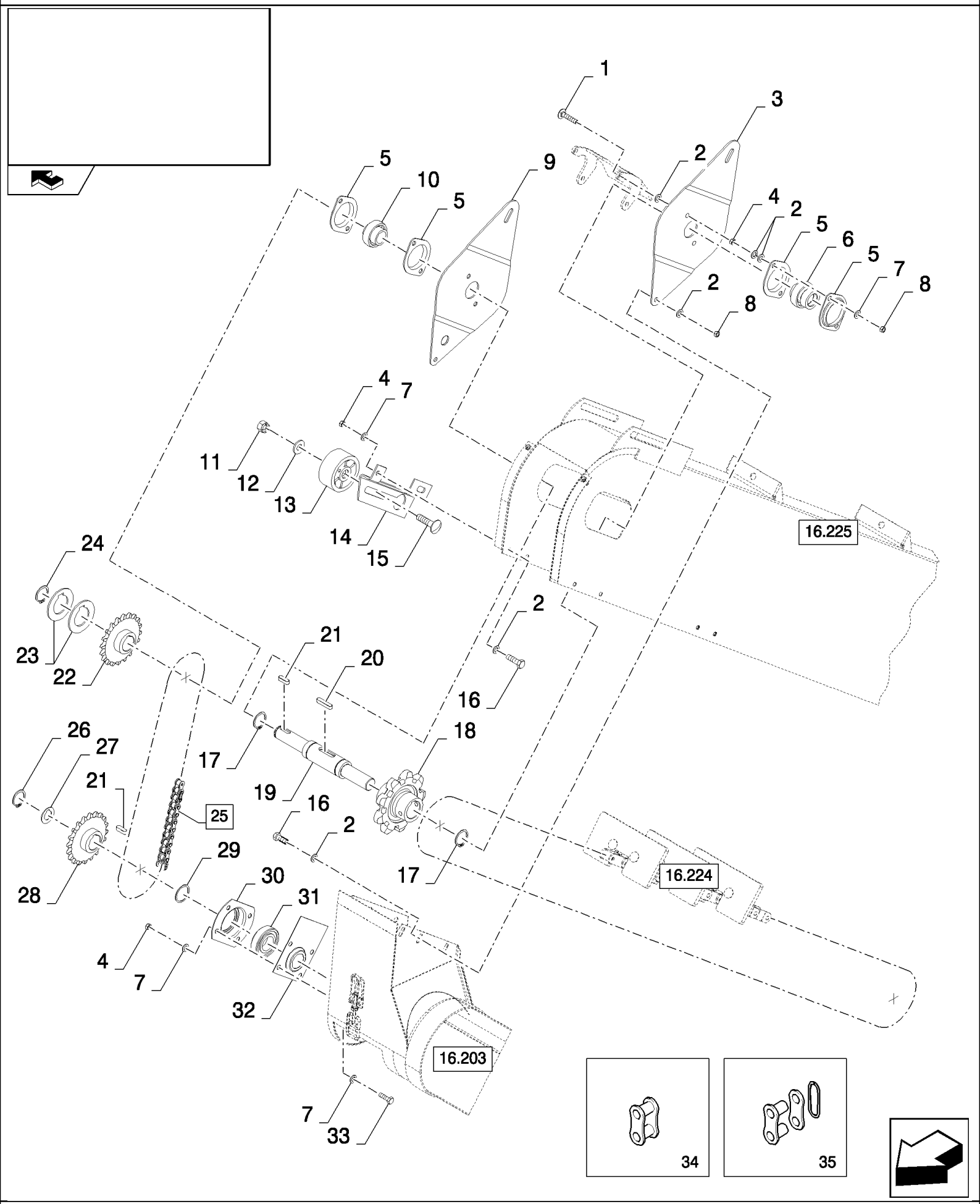

CSX7080 C659 - COMBINE (9/06-8/08)

16.223(01) TAILINGS ELEVATORS

ссылка	Номер детали	Кол-во	Описание
1	86512443	4	BOLT, CARRIAGE, Short NK, M8 x 35, Cl8.8, Full Thd, M8x35
2	140016	20	WASHER, M8 x 16 x 1.6,
3	84981025	1	PLATE,
4	9706690	14	NUT, M8, Cl 8,
5	86548974	4	FLANGE,
6	84992001	1	BEARING ASSY,
7	322358	16	WASHER, SPRING, Belleville, M8,
8	86629542	6	NUT, LOCK, M8 x 1.25, Cl 8,
9	84981356	1	PLATE,
10	84992002	1	BEARING ASSY,
11	412126	1	NUT, LOCK, M12 x 1.75, Cl 8,
12	378245	1	WASHER, M12,
13	334970	1	PINION, IDLER,
14	84981208	1	SUPPORT,
15	334682	1	BOLT, CARRIAGE, Short NK, M12 x 50, Cl8.8, Full Thd,
16	120104	6	SCREW, Hex, M8 x 20, 8.8,
17	11068376	2	RING, SNAP, M35, Ext x 1.5 Thk,
18	84981028	1	SPROCKET, DRIVEN, , BSN C659
18	87724884	1	SPROCKET, , ASN D660
19	84981295	1	SHAFT,
20	354775	1	KEY,
21	170030	2	KEY, M8 x 7 x 32, Par,
22	84981212	1	SPROCKET, DRIVEN,
23	444976	AR	WASHER, 26MM
24	370002	1	RING, SNAP, M25, Ext,
25	216820	1	CHAIN, (34, 35)
26	370003	1	RING, SNAP, M30, Ext,
27	444974	2	WASHER,
28	84981030	1	SPROCKET, DRIVEN,
29	140108	1	WASHER,
30	9511041	1	FLANGE,
31	210043	1	BEARING, BALL,
32	80423768	1	PLATE,
33	120103	4	BOLT, Hex, M8 x 16, 8.8,
34	25805	63	LINK, CONNECTING,
35	25194	1	LINK, CONNECTING,

16.224(01) TAILINGS ELEVATORS, CHAIN

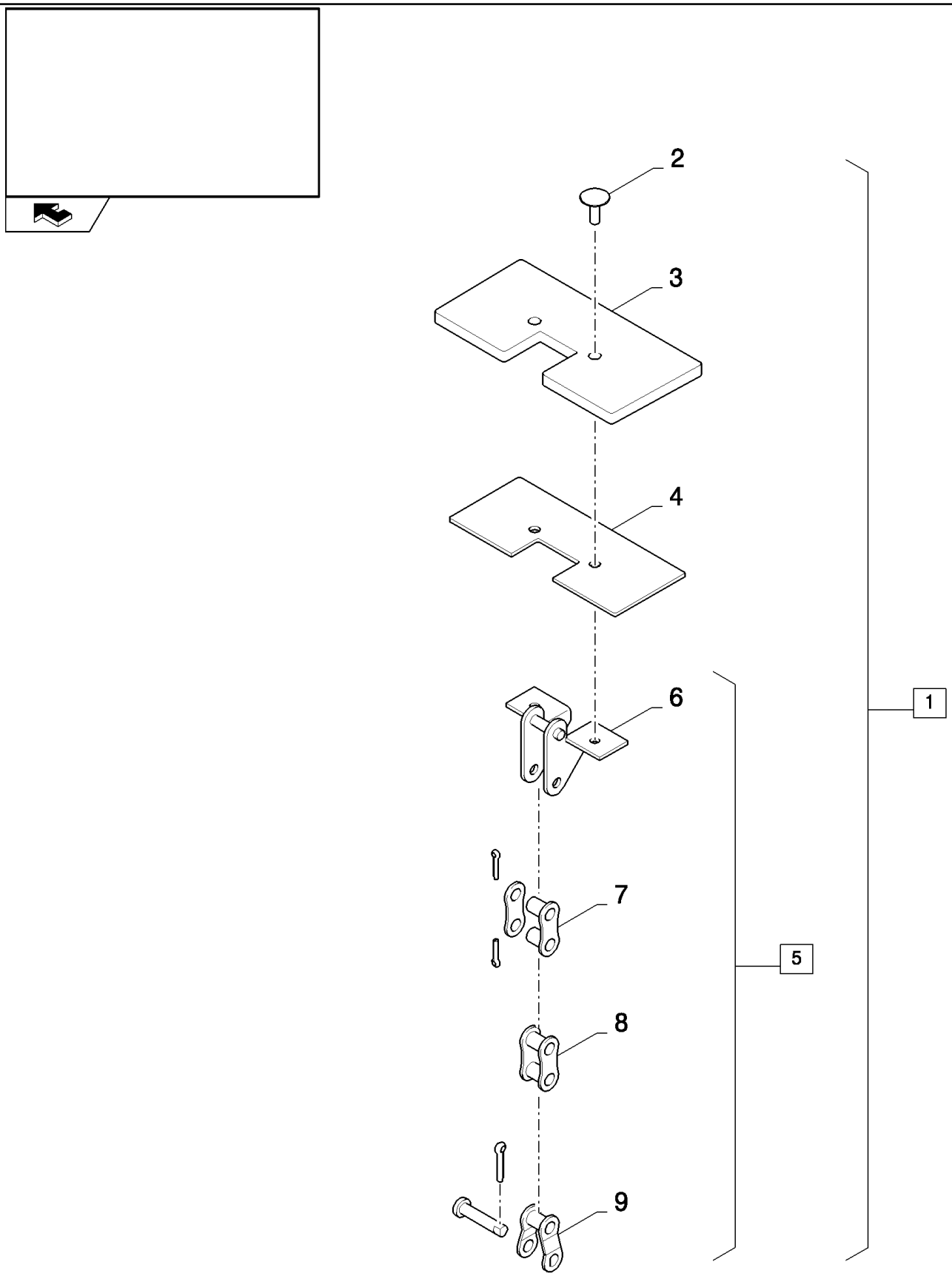

CSX7080 C659 - COMBINE (9/06-8/08)

16.224(01) TAILINGS ELEVATORS, CHAIN

ссылка	Номер детали	Кол-во	Описание
1	84980082	1	CHAIN, (2 to 9)
2	84004839	46	RIVET, Rivet
3	84005086	23	PAD, RUBBER,
4	84018671	23	SUPPORT,
5	84981579	1	CHAIN, (6 to 9)
6	84017435	23	LINK, CONNECTING,
7	40241	43	LINK, CONNECTING,
8	86595253	66	LINK, CHAIN,
9	40242	3	LINK, OFFSET,

16.225(01) TAILINGS ELEVATORS

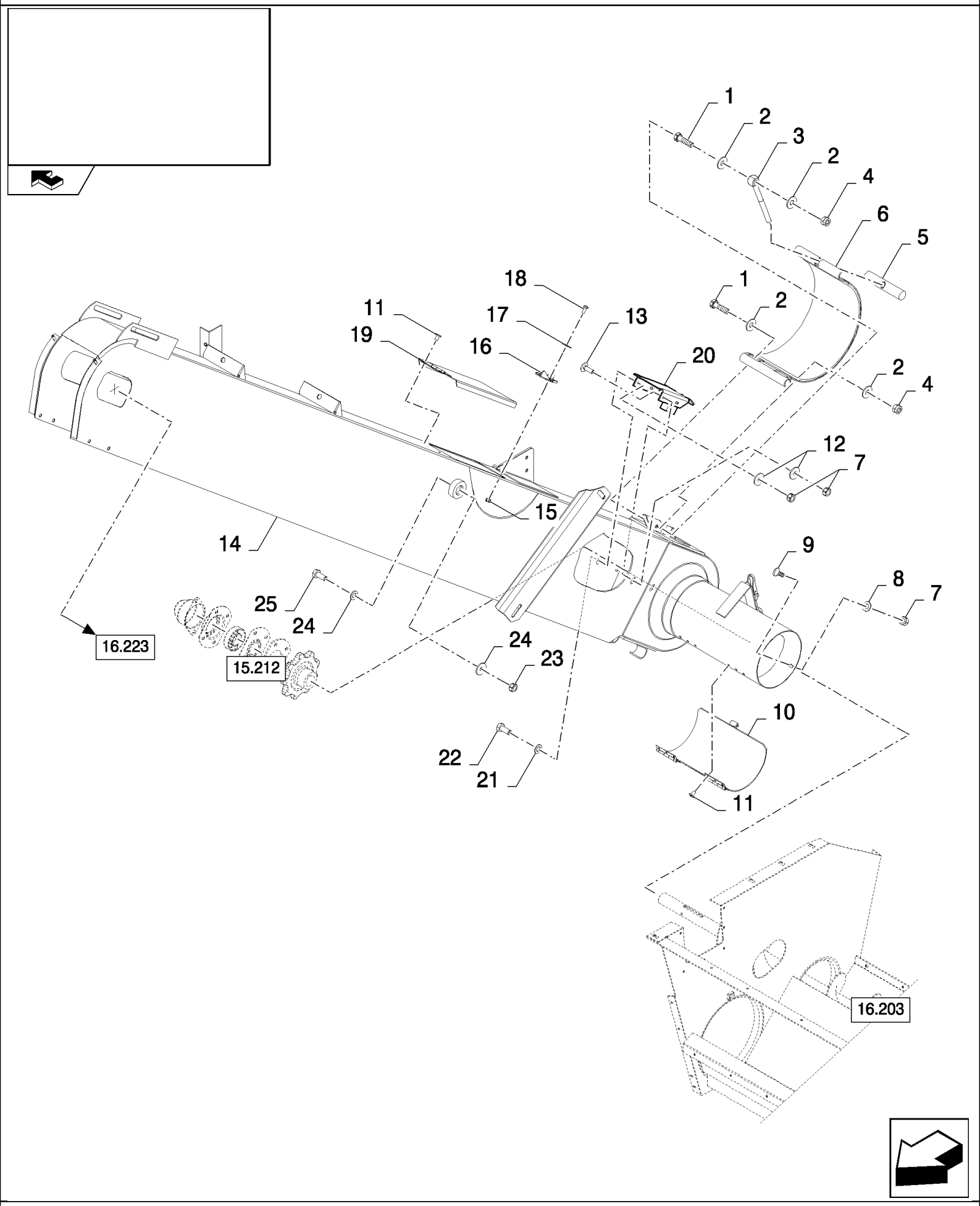

CSX7080 C659 - COMBINE (9/06-8/08)

16.225(01) TAILINGS ELEVATORS

ссылка	Номер детали	Кол-во	Описание
1	43128	2	BOLT, Hex, M8 x 30, 8.8,
2	86511315	4	WASHER, M8 x 16 x 1.6,
3	9811378	1	U-BOLT,
4	86629542	2	NUT, LOCK, M8 x 1.25, Cl 8,
5	9811398	1	ROD,
6	84981227	1	COVER,
6	84982640	1	GUARD, , PERFORATED (LONG HOLES)
7	15896221	6	NUT, M6, Cl 10,
8	322357	2	WASHER, SPRING, Belleville, M6,
9	86512439	2	SCREW, Short NK, M6 x 16, Cl8.8, Full Thd,
10	84981226	1	COVER,
11	NSS	8	NOT SERVICED SEPARATELY, Rivet
12	412649	4	WASHER, SPRING, Belleville, M6,
13	9706703	3	BOLT, CARRIAGE, Short NK, M6 x 20, Cl8.8, Full Thd,
14	87387264	1	ELEVATOR, , STANDARD
14	87387321	1	ELEVATOR, , REINFORCED
15	385681	1	NUT, LOCK, M4 x .7, Cl 8, M4
16	362786	1	FASTENER,
17	362785	1	WASHER,
18	86585706	1	SCREW, Cross Pan Hd, M4 x 10,
19	84981225	1	COVER,
20	84980989	1	EXTENSION, , STANDARD
20	84981153	1	EXTENSION, , REINFORCED
21	140040	1	WASHER, M6 x 22 x 2,
22	86508568	1	SCREW, Hex, M6 x 16, 8.8,
23	9706690	6	NUT, M8, Cl 8,
24	140041	4	WASHER, M8 x 28 x 3,
25	84025547	2	SCREW,

16.226(01) GRAINTANK EXTENSION, COVERS

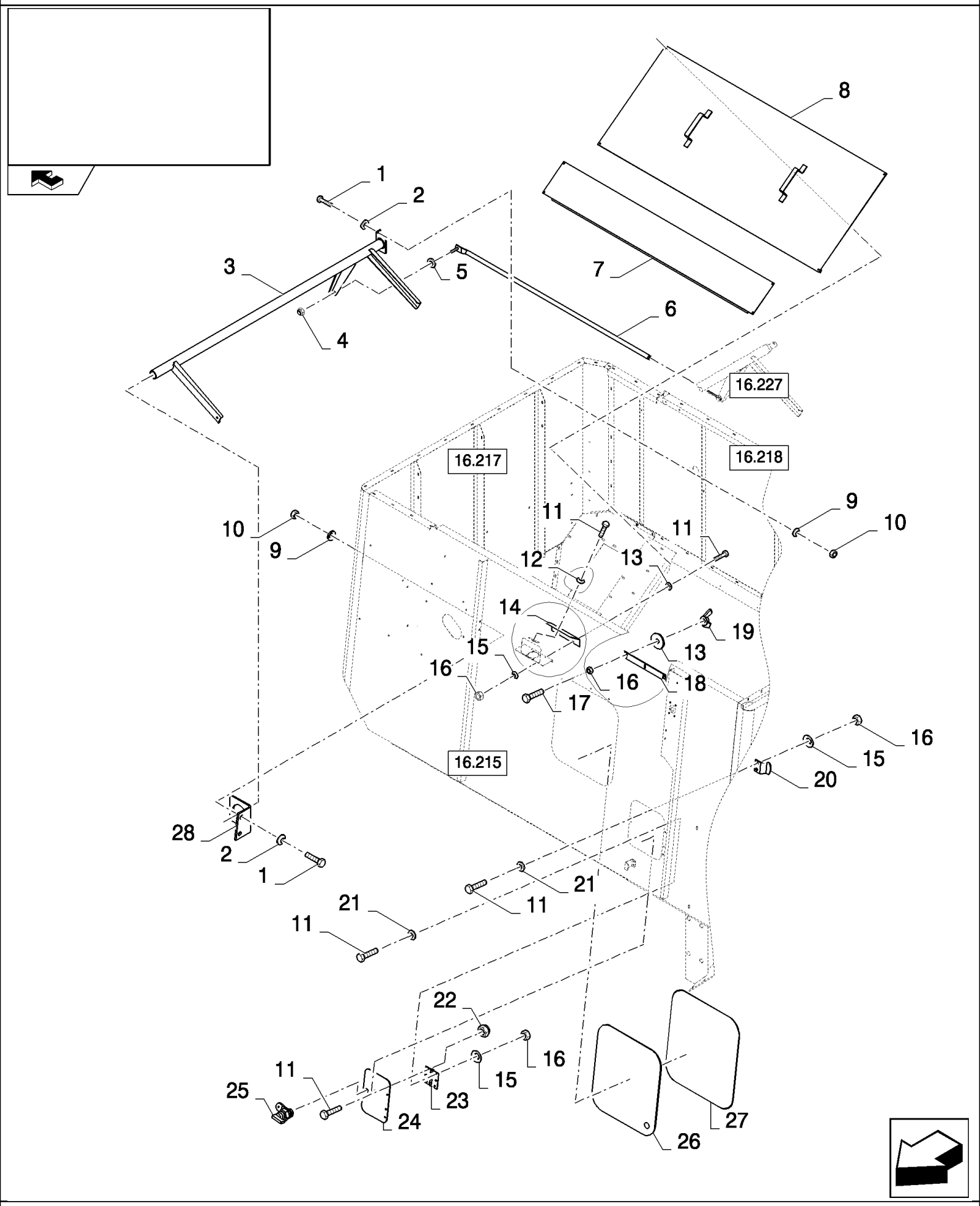

CSX7080 C659 - COMBINE (9/06-8/08)

16.226(01) GRAINTANK EXTENSION, COVERS

ссылка	Номер детали	Кол-во	Описание
1	43138	6	SCREW, Hex, M10 x 20, 8.8, Full Thd,
2	86511323	6	WASHER, M10 x 20 x 2,
3	84446117	1	LEVER,
4	100038	1	NUT, M12 x 1.75, Cl 8,
5	378245	1	WASHER, M12,
6	84446174	1	ROD, ADJUSTMENT,
7	87372577	1	COVER,
8	84980277	1	PLATE, , BSN C583
8	87617239	1	COVER, , ASN D584
9	140045	6	WASHER, SPRING, Belleville, M10,
10	100016	6	NUT, M10, Cl 8,
11	86508568	13	SCREW, Hex, M6 x 16, 8.8,
12	412649	1	WASHER, SPRING, Belleville, M6,
13	140040	5	WASHER, M6 x 22 x 2,
14	84980258	1	COVER,
15	322357	8	WASHER, SPRING, Belleville, M6,
16	9706755	11	NUT, M6, Cl 8,
17	120100	3	BOLT, Hex, M6 x 20, 8.8,
18	9812263	1	BRACKET,
19	84814892	3	NUT, WING, M6 x 1,
20	9514387	1	BRACKET,
21	140015	6	WASHER, 6MM
22	353308	4	NUT, M6 x 1, Cl 8,
23	9833212	2	HINGE,
24	80825505	1	GLASS,
25	89577003	1	LOCK,
26	9500277	1	GLASS, CAB,
27	89850033	1	SEAL, L=1.8M
28	84446192	1	PLATE,

16.226(A 01) GRAINTANK EXTENSION, COVERS

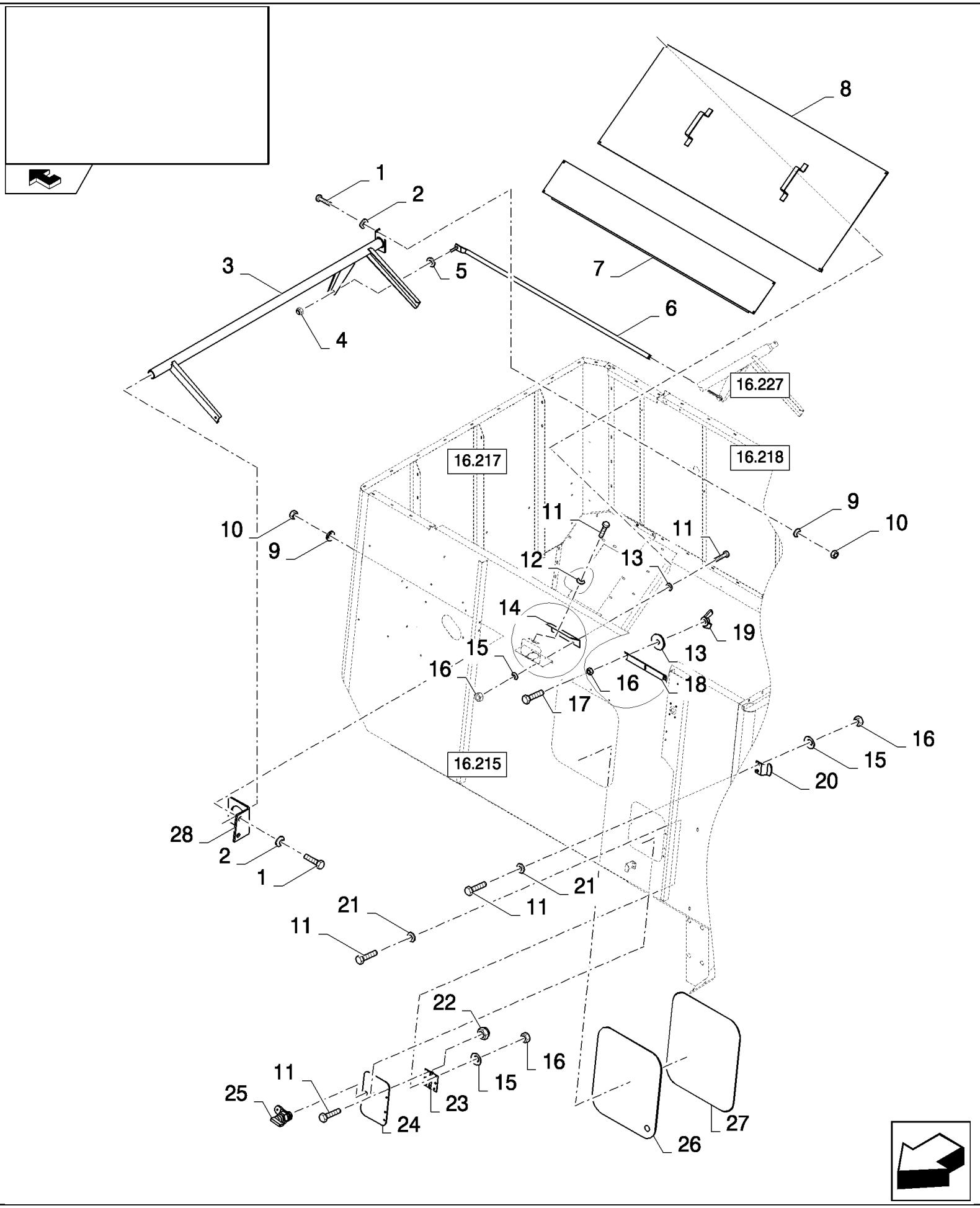

CSX7080 C659 - COMBINE (9/06-8/08)

16.226(A 01) GRAINTANK EXTENSION, COVERS

ссылка	Номер детали	Кол-во	Описание
1	43138	6	SCREW, Hex, M10 x 20, 8.8, Full Thd,
2	86511323	6	WASHER, M10 x 20 x 2,
3	84446117	1	LEVER,
4	100038	1	NUT, M12 x 1.75, Cl 8,
5	378245	1	WASHER, M12,
6	84446174	1	ROD, ADJUSTMENT,
7	87372577	1	COVER,
8	84980277	1	PLATE, , BSN C583
8	87617239	1	COVER, , ASN D584
9	140045	6	WASHER, SPRING, Belleville, M10,
10	100016	6	NUT, M10, Cl 8,
11	86508568	13	SCREW, Hex, M6 x 16, 8.8,
12	412649	1	WASHER, SPRING, Belleville, M6,
13	140040	5	WASHER, M6 x 22 x 2,
14	84980258	1	COVER,
15	322357	8	WASHER, SPRING, Belleville, M6,
16	9706755	11	NUT, M6, Cl 8,
17	120100	3	BOLT, Hex, M6 x 20, 8.8,
18	9812263	1	BRACKET,
19	84814892	3	NUT, WING, M6 x 1,
20	9514387	1	BRACKET,
21	140015	6	WASHER, 6MM
22	353308	4	NUT, M6 x 1, Cl 8,
23	9833212	2	HINGE,
24	80825505	1	GLASS,
25	89577003	1	LOCK,
26	9500277	1	GLASS, CAB,
27	89850033	1	SEAL, L=1.8M
28	84446192	1	PLATE,

16.227(01) GRAINTANK EXTENSION, COVERS

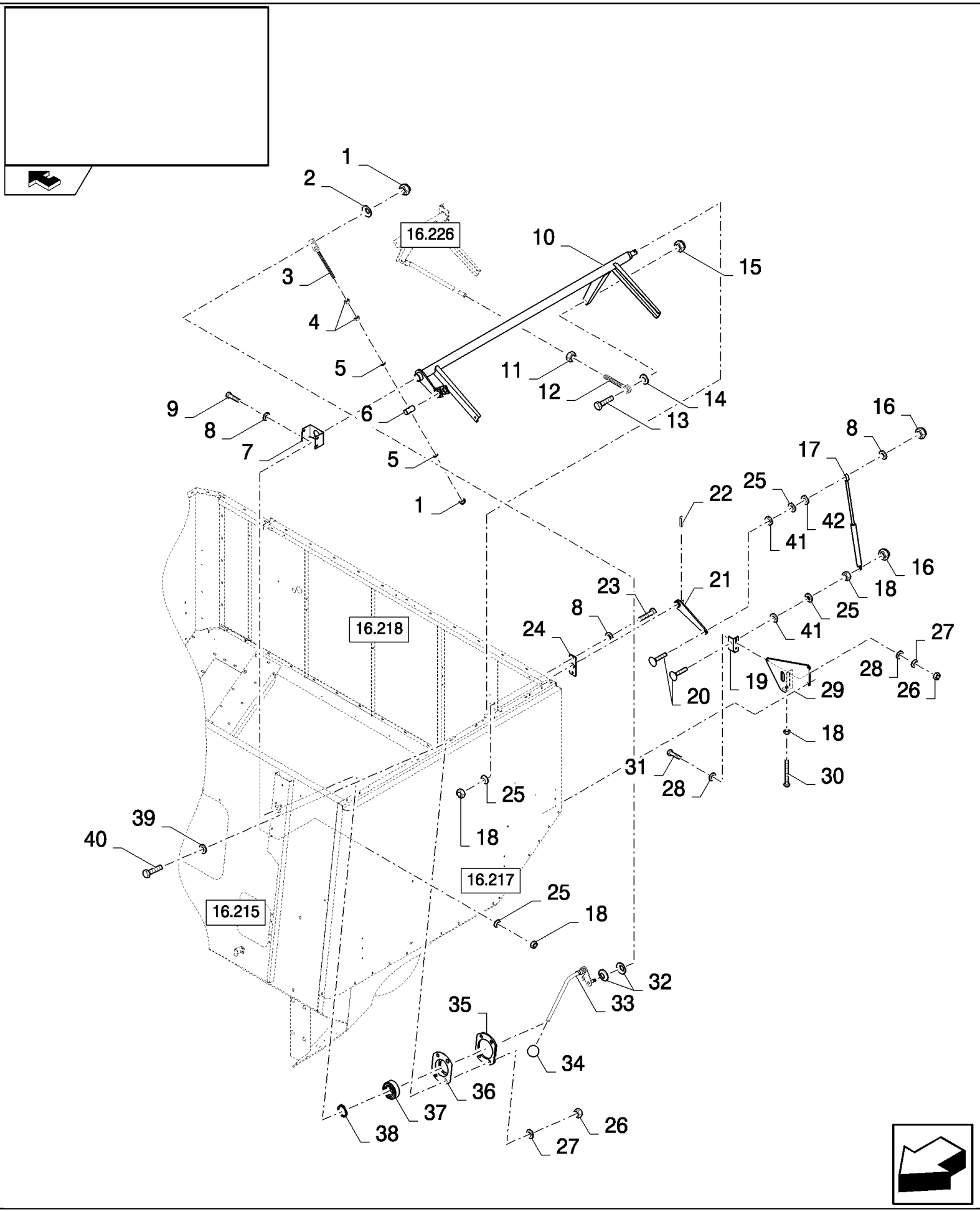

CSX7080 C659 - COMBINE (9/06-8/08)

16.227(01) GRAINTANK EXTENSION, COVERS

ссылка	Номер детали	Кол-во	Описание
1	86000441	2	NUT, M16 x 2, Cl 8,
2	140048	1	WASHER, SPRING, Belleville, M16,
3	84447692	1	ROD, CONNECTING,
4	100020	2	NUT, M16, Cl 8,
5	450869	2	WASHER,
6	84447689	1	SHAFT,
7	84447695	1	SUPPORT,
8	86511323	7	WASHER, M10 x 20 x 2,
9	43138	4	SCREW, Hex, M10 x 20, 8.8, Full Thd,
10	84446194	1	LEVER,
11	9706685	1	NUT, M12, Cl 8,
12	330413	1	BOLT, BANJO,
13	9706687	1	SCREW, Hex, M12 x 30, 8.8,
14	378245	1	WASHER, M12,
15	100038	1	NUT, M12 x 1.75, Cl 8,
16	100037	2	NUT, M10 x 1.5, Cl 8,
17	84444983	1	SPRING,
18	100016	8	NUT, M10, Cl 8,
19	84446093	1	PLATE,
20	84025685	2	SCREW,
21	84446142	1	SUPPORT,
22	80381531	1	PIN, ROLL,
23	43139	2	SCREW, Hex, M10 x 25, 8.8, Full Thd, M10x25
24	84446111	1	PLATE,
25	140045	8	WASHER, SPRING, Belleville, M10,
26	9706690	6	NUT, M8, Cl 8,
27	322358	6	WASHER, SPRING, Belleville, M8,
28	378243	4	WASHER, M8,
29	84448661	1	SUPPORT,
30	538885	1	BOLT, Hex, M10 x 90, 8.8, Full Thd, M10x90
31	120104	2	SCREW, Hex, M8 x 20, 8.8,
32	86589278	2	WASHER, SPRING,
33	84447693	1	HANDLE,
34	84056709	1	KNOB,
35	84447691	1	PLATE,
36	310045	1	FLANGE, , BSN C563
36	87526988	1	COVER, , ASN D564
37	80034439	1	BEARING ASSY,
38	370002	1	RING, SNAP, M25, Ext,
39	140016	4	WASHER, M8 x 16 x 1.6,
40	43127	4	BOLT, Hex, M8 x 25, 8.8,
41	922429	2	WASHER,
42	354720	1	NUT, Thin, M10 x 1.5, Cl 04,

16.228(01) GRAINTANK EXTENSION, COVERS

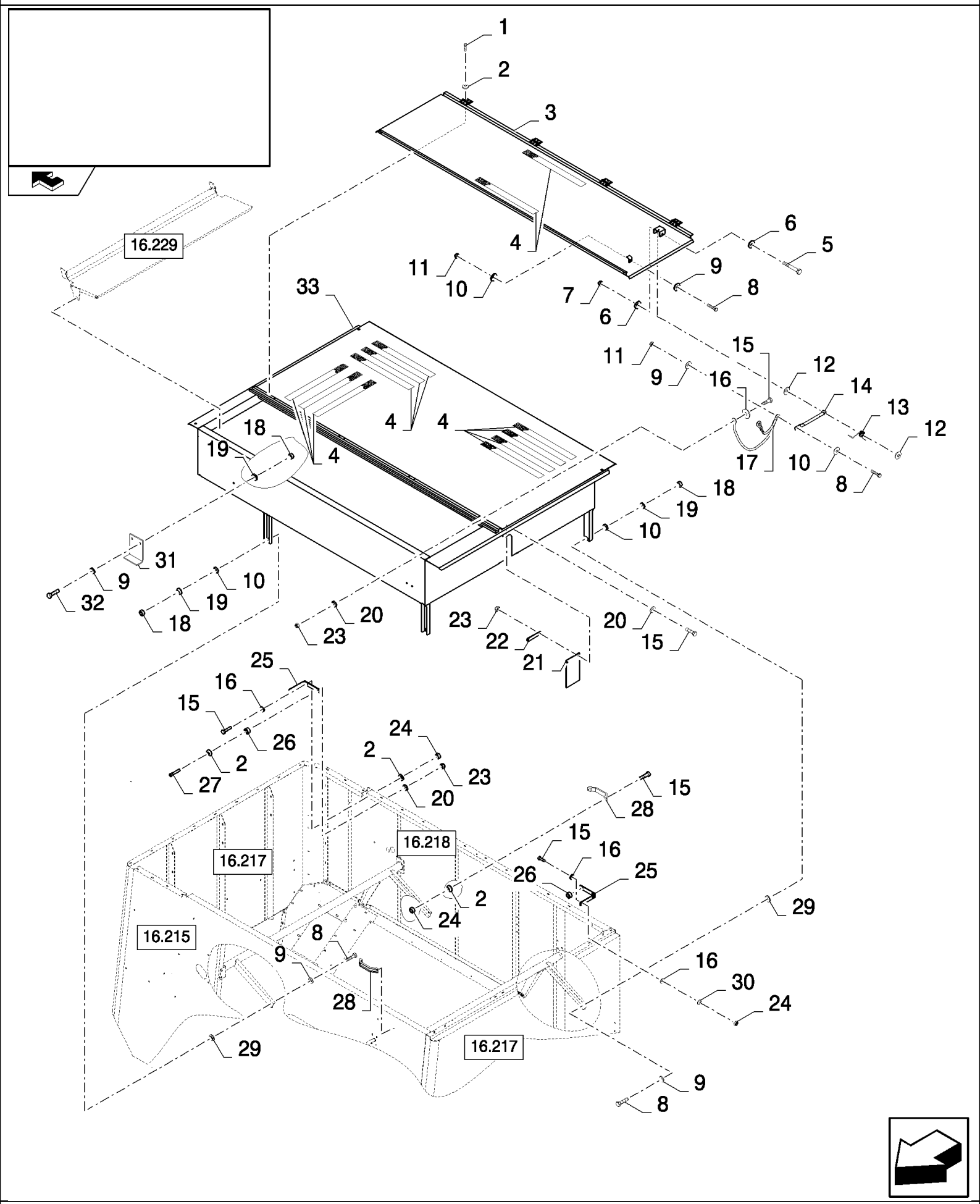

CSX7080 C659 - COMBINE (9/06-8/08)

16.228(01) GRAINTANK EXTENSION, COVERS

ссылка	Номер детали	Кол-во	Описание
1	86508568	8	SCREW, Hex, M6 x 16, 8.8,
2	322357	20	WASHER, SPRING, Belleville, M6,
3	84446054	1	COVER,
4	401502	AR	STRIP, ANTI-SKID, 51mm x 18.3 Roll - Cut to Size
5	43144	1	SCREW, Hex, M10 x 70, 8.8,
6	86511323	2	WASHER, M10 x 20 x 2,
7	100037	1	NUT, M10 x 1.5, Cl 8,
8	43128	6	BOLT, Hex, M8 x 30, 8.8,
9	140016	12	WASHER, M8 x 16 x 1.6,
10	140041	6	WASHER, M8 x 28 x 3,
11	86629542	2	NUT, LOCK, M8 x 1.25, Cl 8,
12	140042	2	WASHER, M10 x 34 x 3,
13	84014761	1	SPRING,
14	84980941	1	LEVER,
15	120100	19	BOLT, Hex, M6 x 20, 8.8,
16	140040	21	WASHER, M6 x 22 x 2,
17	84980936	1	ROPE,
18	9706690	4	NUT, M8, Cl 8,
19	322358	4	WASHER, SPRING, Belleville, M8,
20	140015	7	WASHER, 6MM
21	84818219	1	CANVAS, , BSN C563
21	87599848	1	CANVAS, , ASN D564
22	84818221	1	PLATE,
23	353308	7	NUT, M6 x 1, Cl 8,
24	9706755	16	NUT, M6, Cl 8,
25	84980257	4	BRACKET,
26	84447128	4	BUSHING,
27	9832203	4	SCREW, Hex Soc Hd, M6 x 25, 8.8, M6x25
28	89837395	2	HANDLE,
29	84444956	4	BUSHING,
30	412649	8	WASHER, SPRING, Belleville, M6,
31	84446035	3	PLATE,
32	120104	6	SCREW, Hex, M8 x 20, 8.8,
33	84818208	1	COVER,

CSX7080 C659 - COMBINE (9/06-8/08)

16.228(A 01) GRAINTANK EXTENSION, COVERS

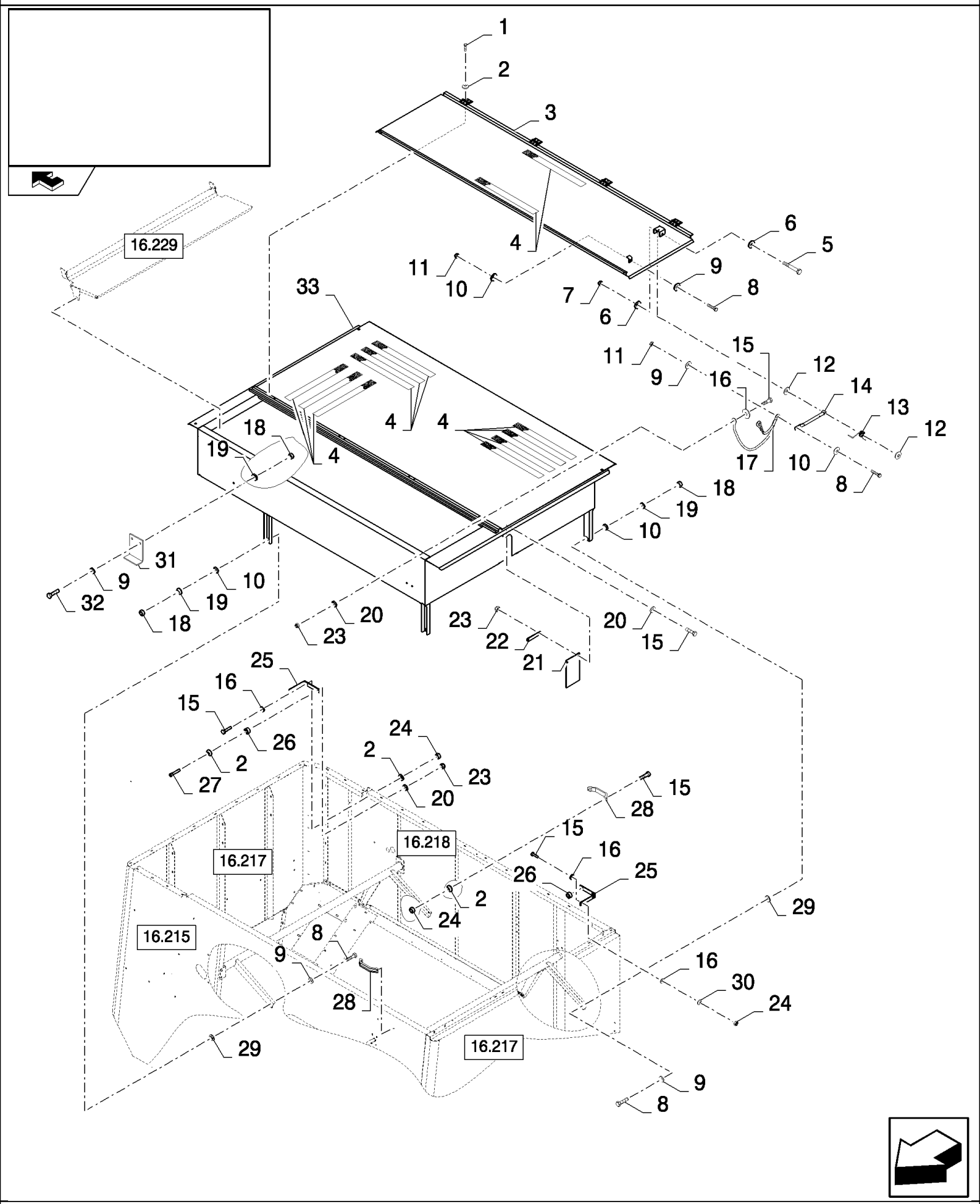

CSX7080 C659 - COMBINE (9/06-8/08)

16.228(A 01) GRAINTANK EXTENSION, COVERS

ссылка	Номер детали	Кол-во	Описание
1	86508568	8	SCREW, Hex, M6 x 16, 8.8,
2	322357	20	WASHER, SPRING, Belleville, M6,
3	84983350	1	COVER,
4	401502	AR	STRIP, ANTI-SKID, 51mm x 18.3 Roll - Cut to Size
5	43144	1	SCREW, Hex, M10 x 70, 8.8,
6	86511323	2	WASHER, M10 x 20 x 2,
7	100037	1	NUT, M10 x 1.5, Cl 8,
8	43128	6	BOLT, Hex, M8 x 30, 8.8,
9	140016	12	WASHER, M8 x 16 x 1.6,
10	140041	6	WASHER, M8 x 28 x 3,
11	86629542	2	NUT, LOCK, M8 x 1.25, Cl 8,
12	140042	2	WASHER, M10 x 34 x 3,
13	84014761	1	SPRING,
14	84980941	1	LEVER,
15	120100	19	BOLT, Hex, M6 x 20, 8.8,
16	140040	21	WASHER, M6 x 22 x 2,
17	84980936	1	ROPE,
18	9706690	4	NUT, M8, Cl 8,
19	322358	4	WASHER, SPRING, Belleville, M8,
20	140015	7	WASHER, 6MM
21	84818219	1	CANVAS, , BSN C563
21	87599848	1	CANVAS, , ASN D564
22	84818221	1	PLATE,
23	353308	7	NUT, M6 x 1, Cl 8,
24	9706755	16	NUT, M6, Cl 8,
25	84980257	4	BRACKET,
26	84447128	4	BUSHING,
27	9832203	4	SCREW, Hex Soc Hd, M6 x 25, 8.8, M6x25
28	89837395	2	HANDLE,
29	84444956	4	BUSHING,
30	412649	8	WASHER, SPRING, Belleville, M6,
31	84446035	3	PLATE,
32	120104	6	SCREW, Hex, M8 x 20, 8.8,
33	84983351	1	COVER,

16.229(01) GRAINTANK EXTENSION, COVERS

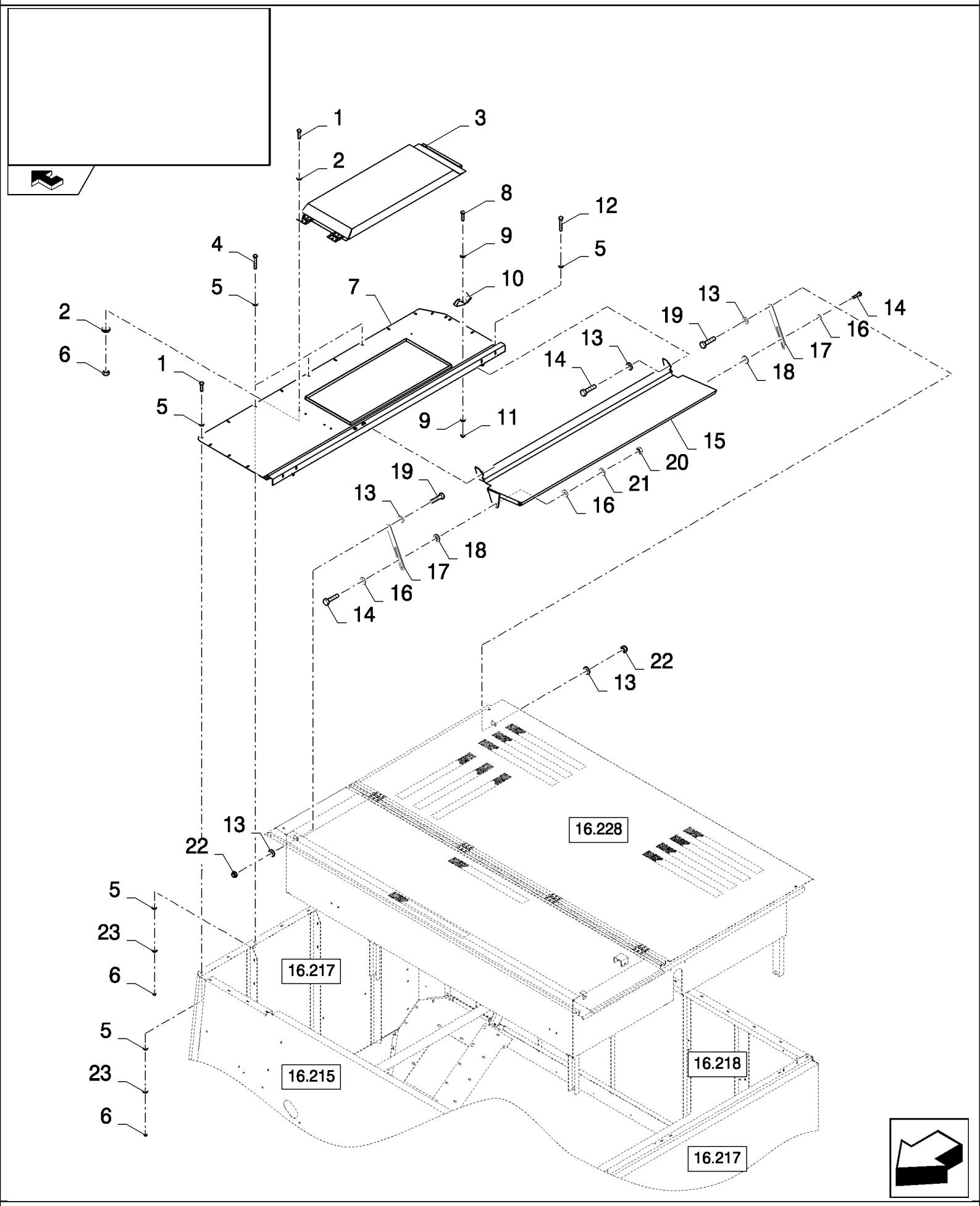

CSX7080 C659 - COMBINE (9/06-8/08)

16.229(01) GRAINTANK EXTENSION, COVERS

ссылка	Номер детали	Кол-во	Описание
1	86508568	16	SCREW, Hex, M6 x 16, 8.8,
2	322357	8	WASHER, SPRING, Belleville, M6,
3	87347666	1	COVER,
4	120102	4	SCREW, Hex, M6 x 40, 8.8, Full Thd,
5	140040	36	WASHER, M6 x 22 x 2,
6	9706755	22	NUT, M6, Cl 8,
7	84444964	1	PLATE, , BSN C543
7	84983348	1	PLATE, , ASN D544
8	86511042	2	SCREW, Cross Pan Hd, M4 x 16,
9	362785	4	WASHER,
10	362786	2	FASTENER,
11	385681	2	NUT, LOCK, M4 x .7, Cl 8, M4
12	120100	2	BOLT, Hex, M6 x 20, 8.8,
13	140016	8	WASHER, M8 x 16 x 1.6,
14	43128	4	BOLT, Hex, M8 x 30, 8.8,
15	84446011	1	COVER,
16	140041	4	WASHER, M8 x 28 x 3,
17	84982346	2	PLATE,
18	84444956	2	BUSHING,
19	120104	2	SCREW, Hex, M8 x 20, 8.8,
20	9706690	2	NUT, M8, Cl 8,
21	322358	2	WASHER, SPRING, Belleville, M8,
22	86629542	4	NUT, LOCK, M8 x 1.25, Cl 8,
23	412649	18	WASHER, SPRING, Belleville, M6,

16.229(A 01) GRAINTANK EXTENSION, COVERS

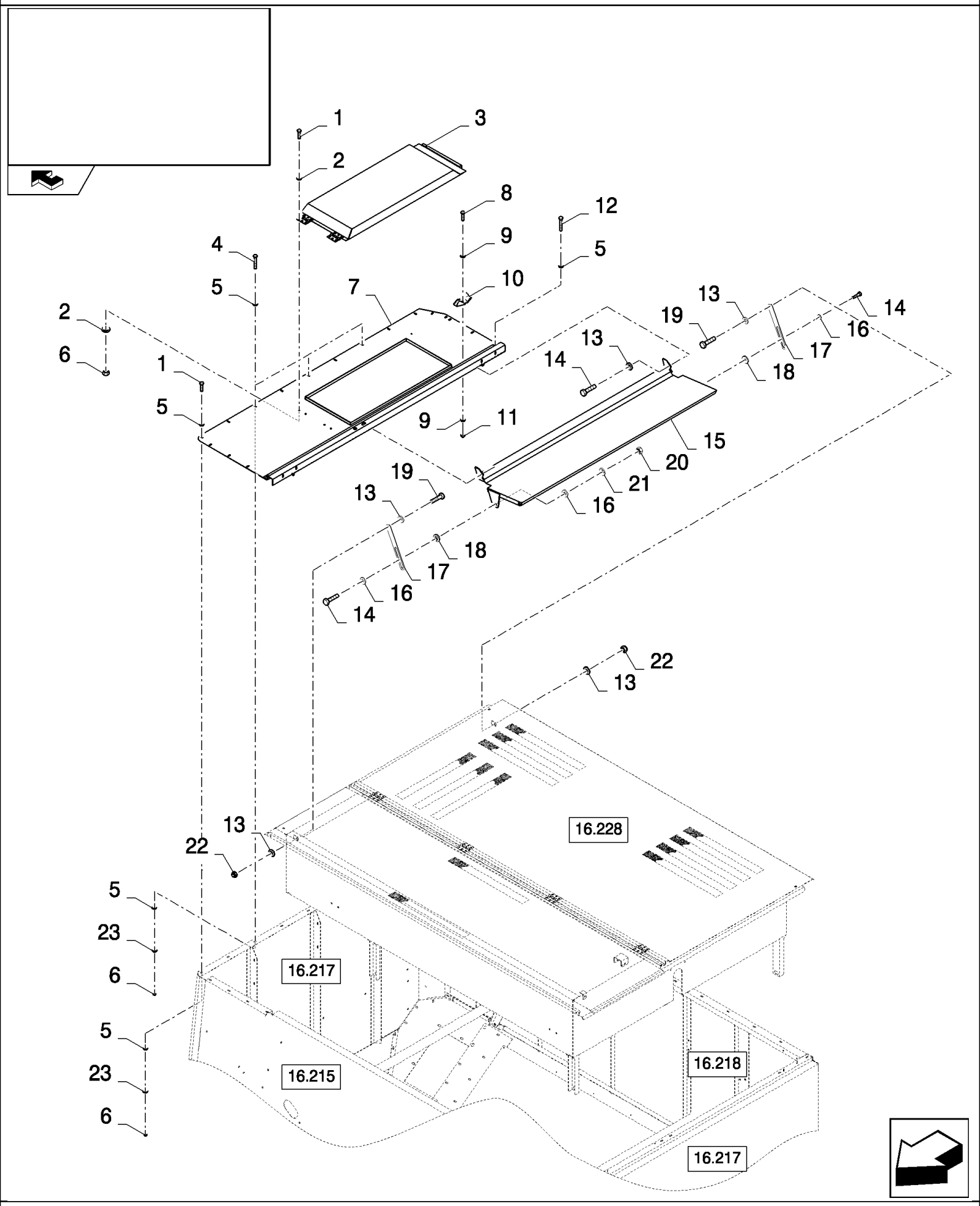

CSX7080 C659 - COMBINE (9/06-8/08)

16.229(A 01) GRAINTANK EXTENSION, COVERS

ссылка	Номер детали	Кол-во	Описание
1	86508568	16	SCREW, Hex, M6 x 16, 8.8,
2	322357	8	WASHER, SPRING, Belleville, M6,
3	87347668	1	COVER,
4	120102	4	SCREW, Hex, M6 x 40, 8.8, Full Thd,
5	140040	36	WASHER, M6 x 22 x 2,
6	9706755	22	NUT, M6, Cl 8,
7	84983348	1	PLATE,
8	86511042	2	SCREW, Cross Pan Hd, M4 x 16,
9	362785	4	WASHER,
10	362786	2	FASTENER,
11	385681	2	NUT, LOCK, M4 x .7, Cl 8, M4
12	120100	2	BOLT, Hex, M6 x 20, 8.8,
13	140016	8	WASHER, M8 x 16 x 1.6,
14	43128	4	BOLT, Hex, M8 x 30, 8.8,
15	84983349	1	COVER,
16	140041	4	WASHER, M8 x 28 x 3,
17	84982346	2	PLATE,
18	84444956	2	BUSHING,
19	120104	2	SCREW, Hex, M8 x 20, 8.8,
20	9706690	2	NUT, M8, Cl 8,
21	322358	2	WASHER, SPRING, Belleville, M8,
22	86629542	4	NUT, LOCK, M8 x 1.25, Cl 8,
23	412649	18	WASHER, SPRING, Belleville, M6,

ACCESSORIES **ACCESSOIRES** **ACCESORIOS** **TILBEHØR**

ACCESSORI **ZUBEHÖR** **ACESSORIOS** **TOEBEHOREN**

SEC. 18

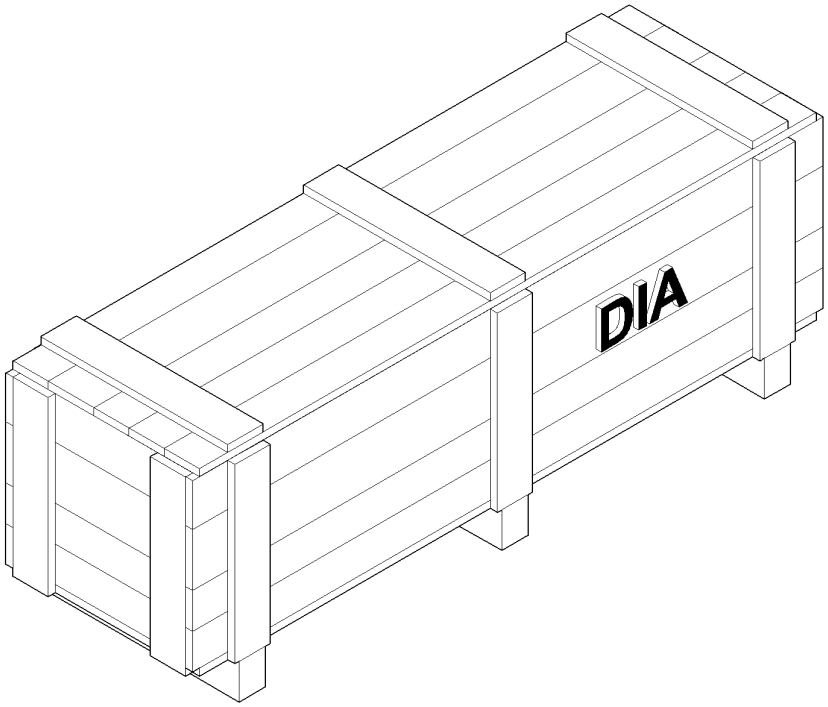

ссылка	Номер детали	Кол-во	Описание

18.84040958(01) DRUM SPEED REDUCTION KIT

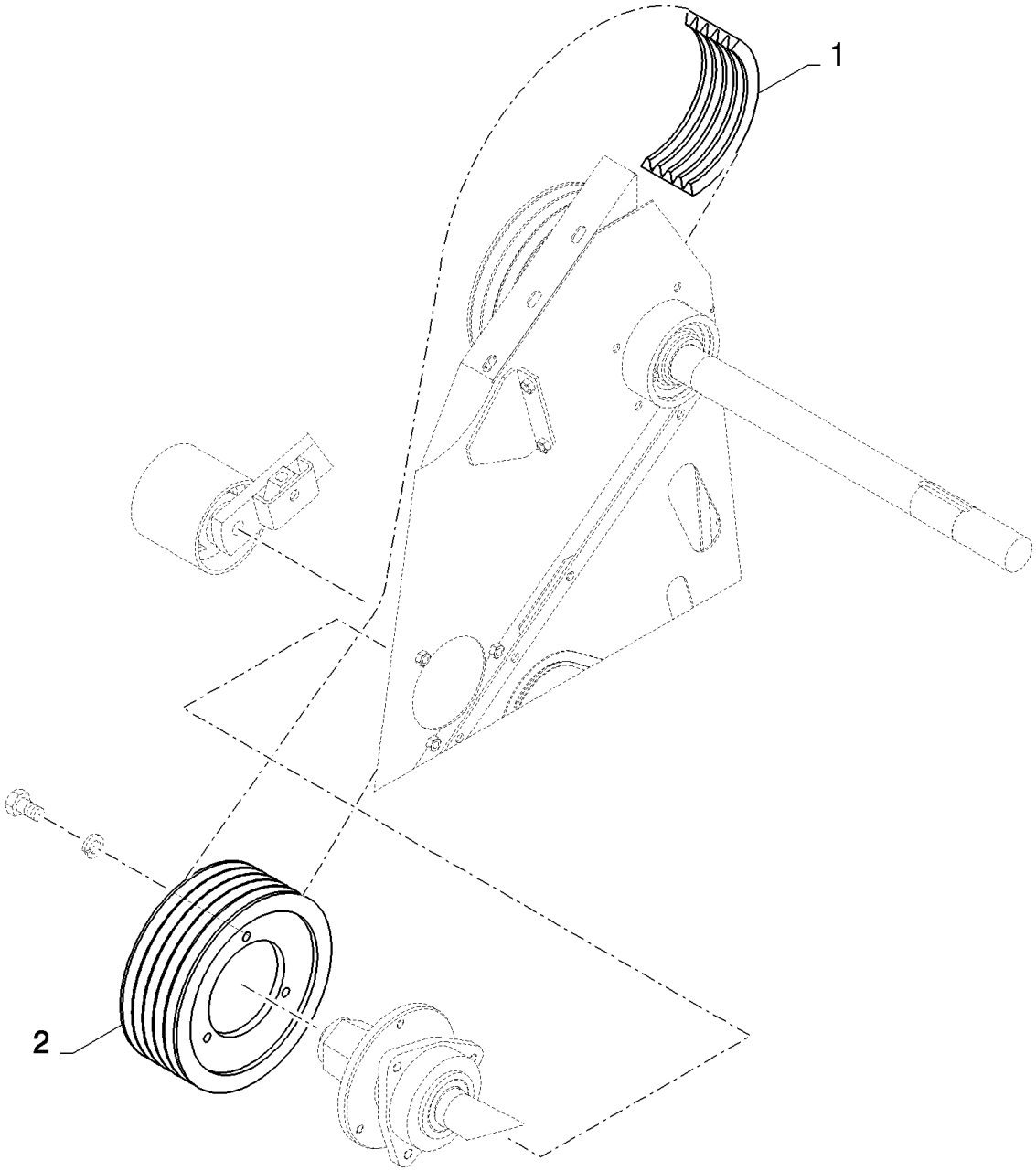

CSX7080 C659 - COMBINE (9/06-8/08)

18.84040958(01) DRUM SPEED REDUCTION KIT

ссылка	Номер детали	Кол-во	Описание
	84040958		DIA KIT, HARVESTER,
1	84072815	1	BELT, TRANSMISSION,
2	84334120	1	PULLEY,

CSX7080 C659 - COMBINE (9/06-8/08)

18.84050434(01) SUITCASE WEIGHTS - SET OF 6 WEIGHTS - 210KG

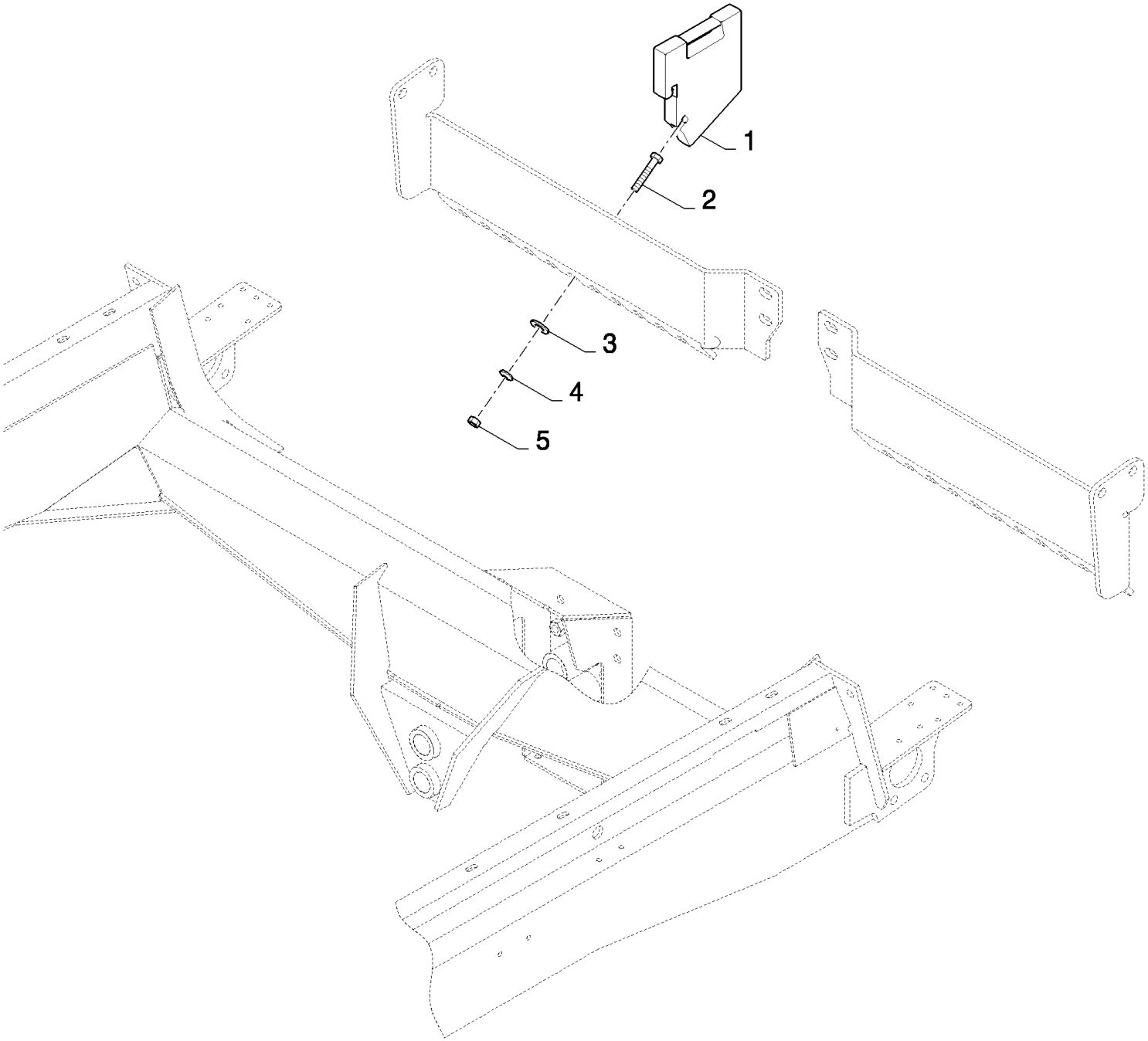

CSX7080 C659 - COMBINE (9/06-8/08)

18.84050434(01) SUITCASE WEIGHTS - SET OF 6 WEIGHTS - 210KG

ссылка	Номер детали	Кол-во	Описание
	84050434		DIA KIT, HARVESTER,
1	84435924	6	WEIGHT, ADVANCE DEVICE,
2	120092	6	SCREW, Hex, M16 x 70, 8.8,
3	451743	6	WASHER,
4	140048	6	WASHER, SPRING, Belleville, M16,
5	100020	6	NUT, M16, Cl 8,

CSX7080 C659 - COMBINE (9/06-8/08)

18.84050562(01) GRAINHEADER ROAD LIGHT KIT

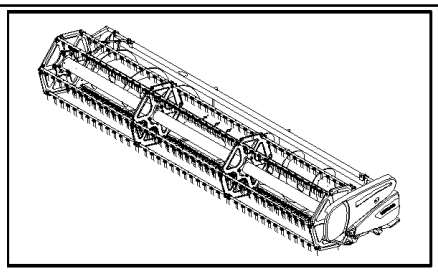

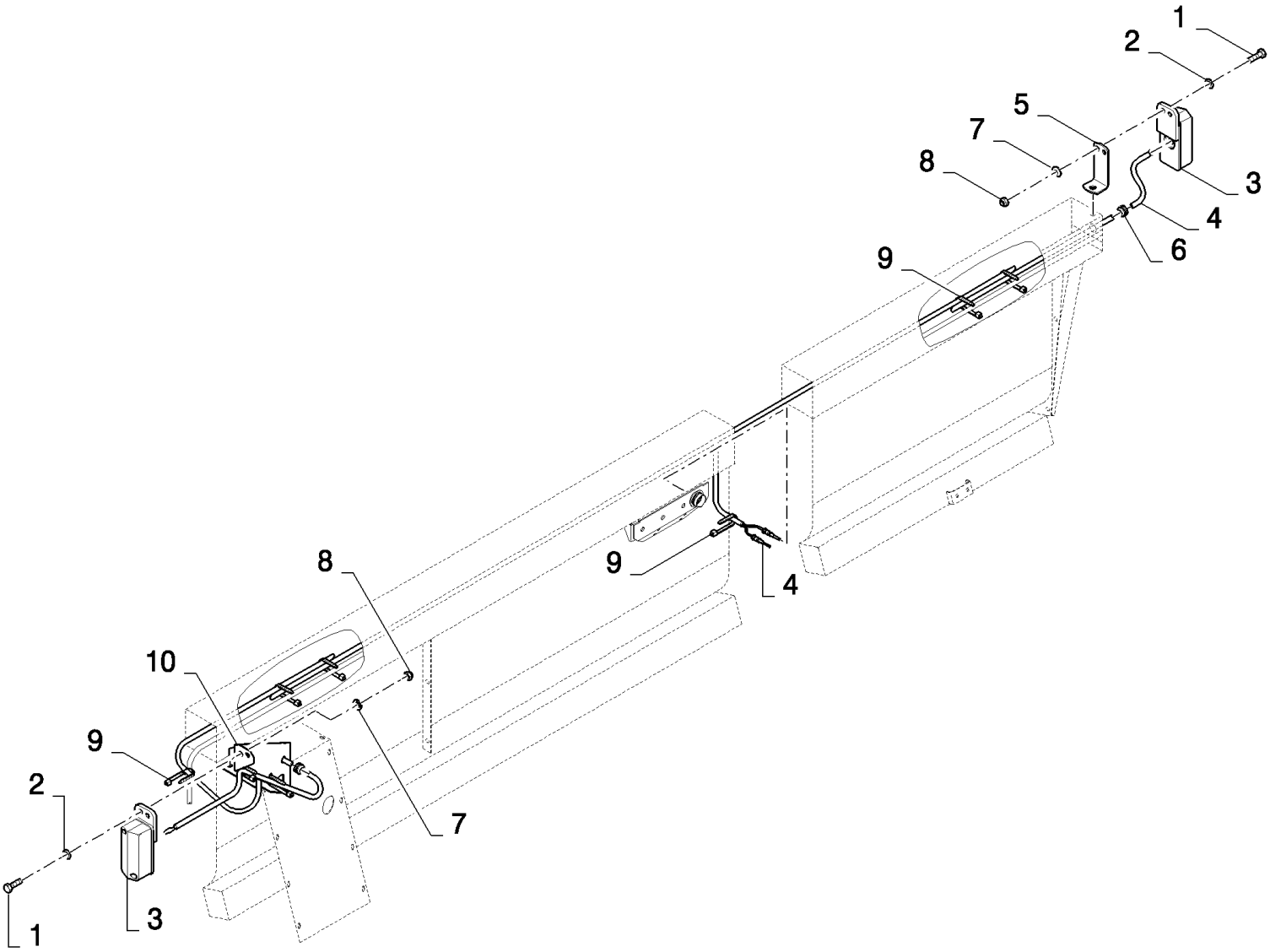

CSX7080 C659 - COMBINE (9/06-8/08)

18.84050562(01) GRAINHEADER ROAD LIGHT KIT

ссылка	Номер детали	Кол-во	Описание
	84050562		DIA KIT, HARVESTER,
1	120100	4	BOLT, Hex, M6 x 20, 8.8,
2	140015	4	WASHER, 6MM
3	449531	2	LAMP,
4	84432334	1	HARNESS, WIRE,
5	84077733	1	BRACKET,
6	335315	2	GROMMET,
7	322357	4	WASHER, SPRING, Belleville, M6,
8	353308	4	NUT, M6 x 1, Cl 8,
9	86566989	9	STRAP, CABLE,
10	84432804	1	SUPPORT,

18.84070039(01) ROTARY SEPARATOR WEAR PLATES

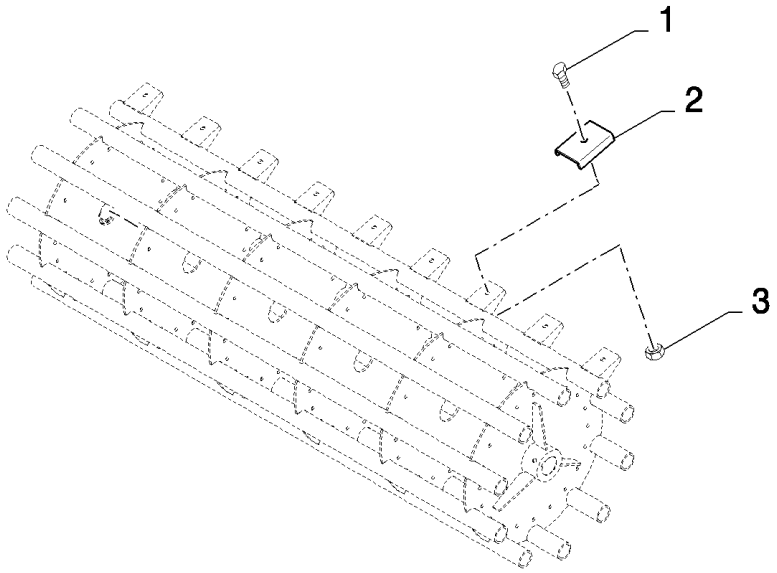

CSX7080 C659 - COMBINE (9/06-8/08)

18.84070039(01) ROTARY SEPARATOR WEAR PLATES

ссылка	Номер детали	Кол-во	Описание
	84070039		DIA KIT, HARVESTER,
1	120041	85	BOLT, CARRIAGE, Short NK, M10 x 20, Cl8.8, Full Thd, M10x20
2	9510423	85	PLATE, SKID,
3	100037	85	NUT, M10 x 1.5, Cl 8,

CSX7080 C659 - COMBINE (9/06-8/08)

18.84079002(01) ROTARY DUST SCREEN BRUSH

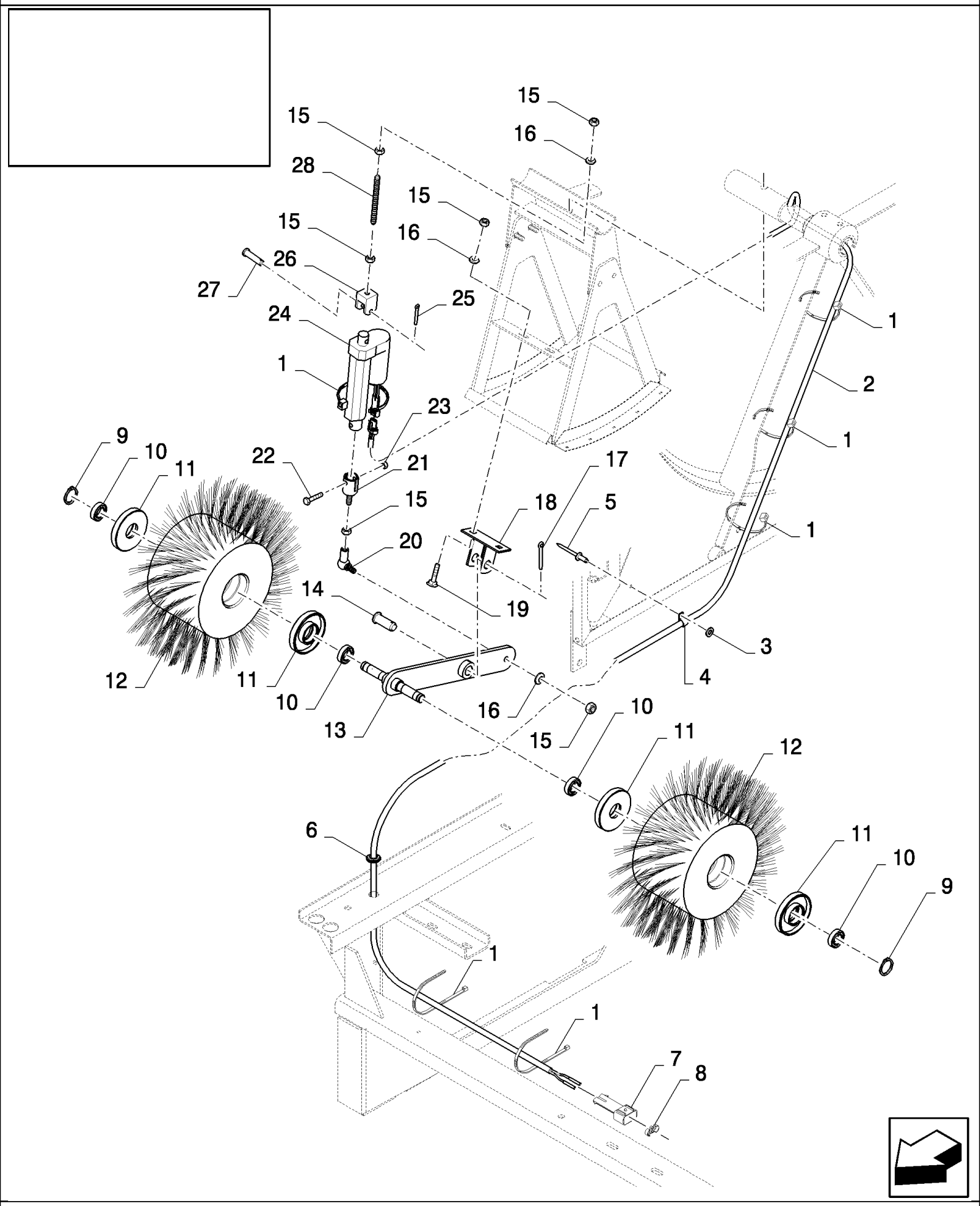

CSX7080 C659 - COMBINE (9/06-8/08)

18.84079002(01) ROTARY DUST SCREEN BRUSH

ссылка	Номер детали	Кол-во	Описание
	84079002		ROTARY DUST SCREEN,
1	86566989	6	STRAP, CABLE,
2	84437301	1	HARNESS, WIRE,
3	9824326	1	WASHER, M5, 5MM
4	9507807	1	CLAMP,
5	9512290	1	RIVET, Rivet
6	411809	1	GROMMET,
7	84074630	1	CONNECTOR, WIRE,
8	86500166	1	PLUG,
9	301615	2	RING, SNAP,
10	9815813	4	BEARING ASSY,
11	84437302	4	HOUSING, BEARING,
12	84449076	2	BRUSH,
13	84449090	1	LEVER,
14	84072127	1	PIN,
15	89706690	7	NUT, M8, Cl 8,
16	322358	4	WASHER, SPRING, Belleville, M8,
17	130007	1	PIN, SPLIT (COTTER), M4 x 25,
18	84071754	1	SUPPORT,
19	86507486	2	BOLT, CARRIAGE, Short NK, M8 x 20, Cl8.8, Full Thd,
20	412439	1	BALL JOINT,
21	84071712	1	CLEVIS,
22	86977789	1	SCREW, Hex, M6 x 35, 8.8,
23	353308	1	NUT, M6 x 1, Cl 8,
24	84440048	1	ACTUATOR,
25	86977785	1	PIN, SPLIT (COTTER), M1.6 x 20,
26	84026054	1	SUPPORT,
27	376876	1	PIN, CLEVIS, M6 x 30,
28	9850506	1	ROD,
	80400981	0.05	loctite

CSX7080 C659 - COMBINE (9/06-8/08)

18.84079053(01) SUITCASE WEIGHTS SUPPORT FRAME

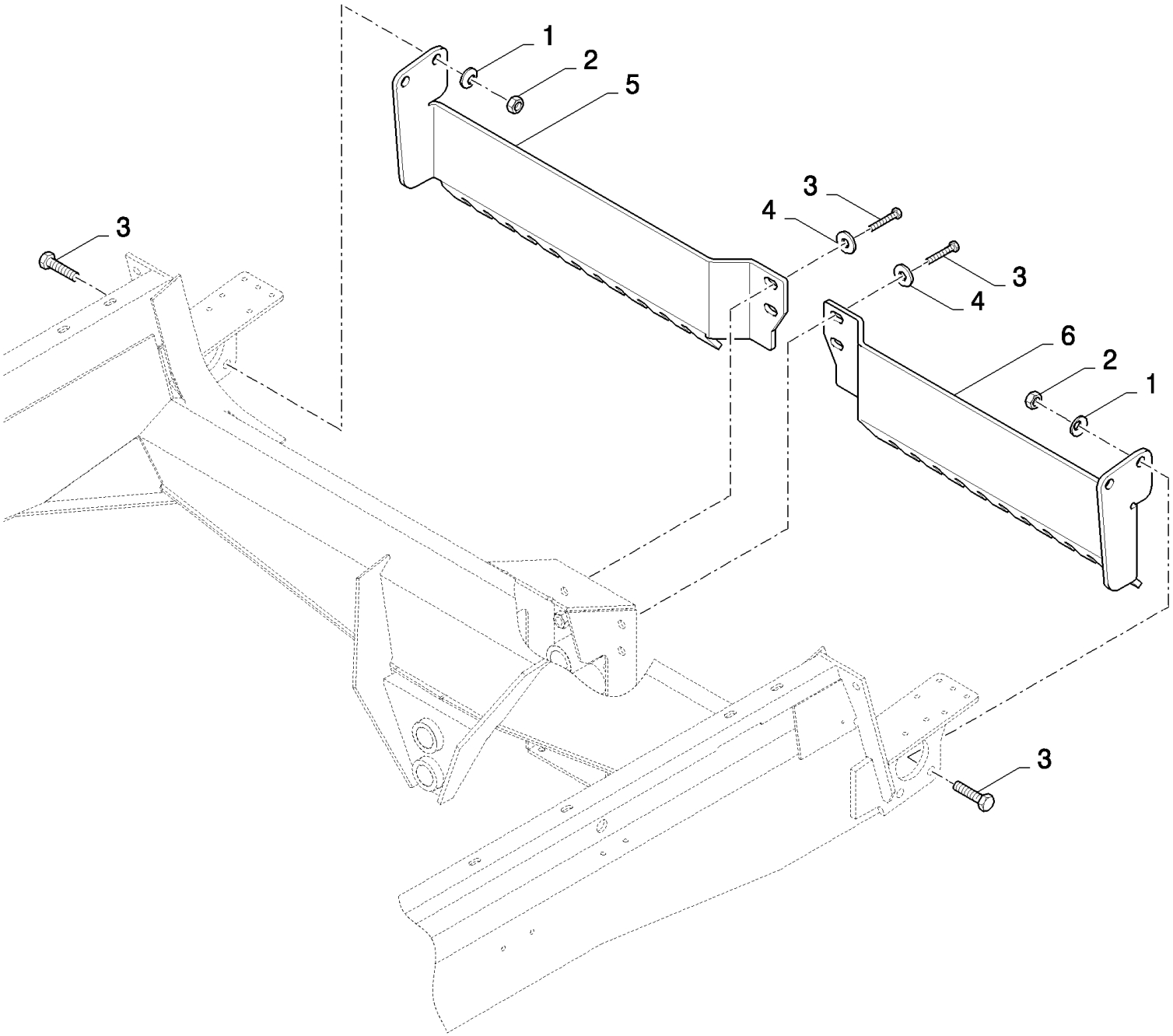

CSX7080 C659 - COMBINE (9/06-8/08)

18.84079053(01) SUITCASE WEIGHTS SUPPORT FRAME

ссылка	Номер детали	Кол-во	Описание
	84079053		DIA KIT, HARVESTER,
1	140048	4	WASHER, SPRING, Belleville, M16,
2	100020	4	NUT, M16, Cl 8,
3	385922	8	SCREW, Hex, M16 x 45, 8.8,
4	394631	4	WASHER, 17MM
5	84438689	1	SUPPORT,
6	84437767	1	SUPPORT,

18.84079152(01) SWATHING RAKES

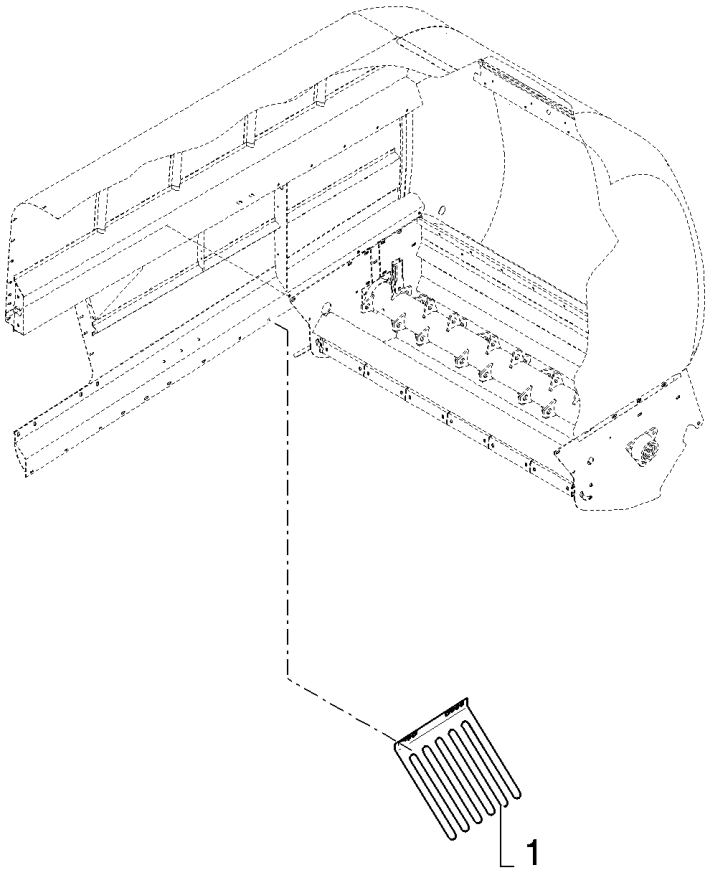

CSX7080 C659 - COMBINE (9/06-8/08)

18.84079152(01) SWATHING RAKES

ссылка	Номер детали	Кол-во	Описание
	84079152		DIA KIT, HARVESTER,
1	84448617	2	RAKE,

18.84079203(01) LOW RPM FAN VARIATOR

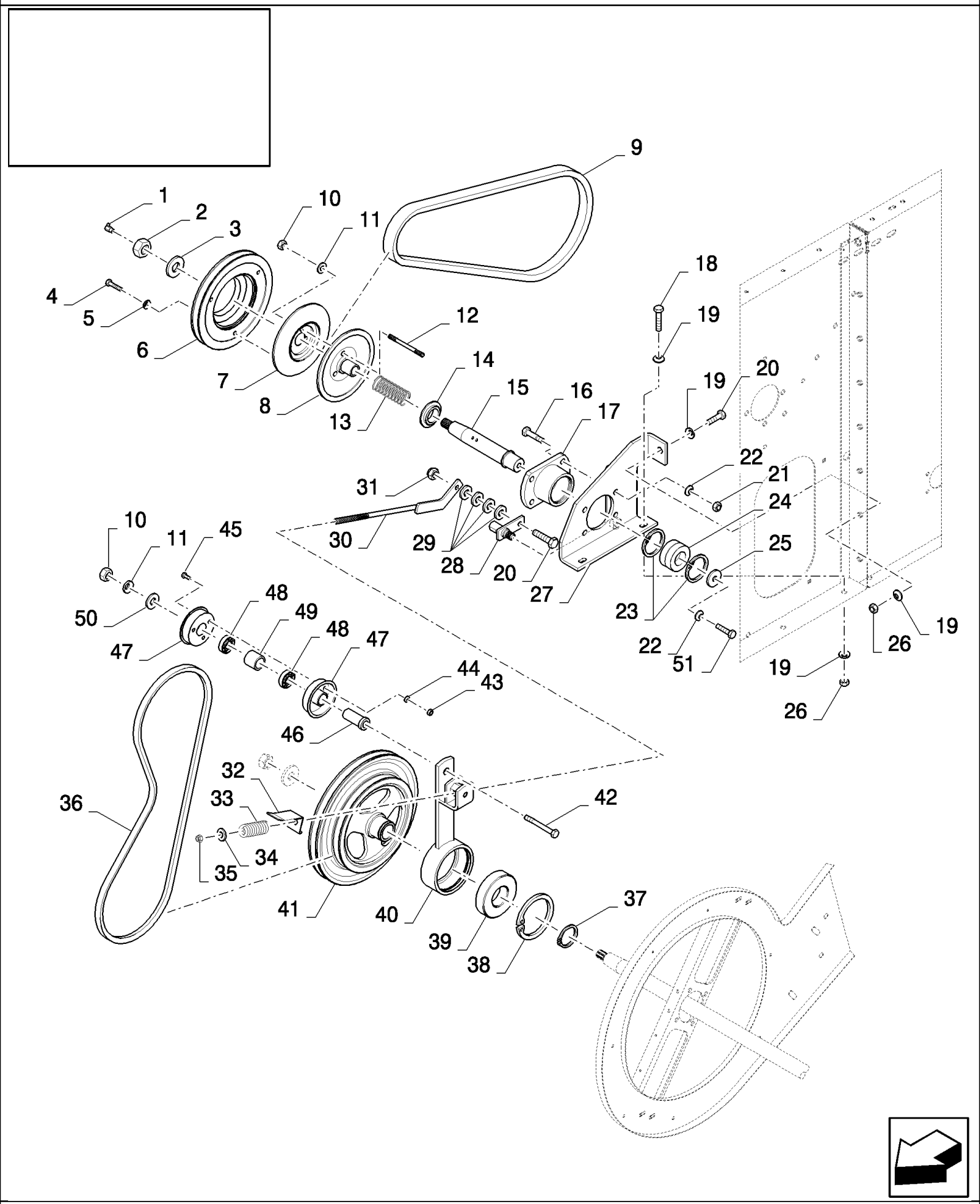

CSX7080 C659 - COMBINE (9/06-8/08)

18.84079203(01) LOW RPM FAN VARIATOR

ссылка	Номер детали	Кол-во	Описание
	84079203		DIA KIT, HARVESTER,
1	323713	1	NIPPLE, LUBE,
2	100085	1	NUT, M20 x 1.5, Cl 8,
3	86592703	1	WASHER, M20 x 50 x 6, HT,
4	43127	3	BOLT, Hex, M8 x 25, 8.8,
5	322358	3	WASHER, SPRING, Belleville, M8,
6	84452186	1	PULLEY,
7	84452219	1	HALF-PULLEY,
8	84334072	1	PULLEY,
9	84452153	1	BELT,
10	100020	4	NUT, M16, Cl 8,
11	140048	4	WASHER, SPRING, Belleville, M16,
12	110055	3	STUD,
13	334054	1	SPRING,
14	84452294	1	RING,
15	84452136	1	SPINDLE,
16	300389	4	BOLT, Hex, M12 x 35, 8.8, Full Thd,
17	84452245	1	HOUSING, BEARING,
18	120112	2	BOLT, Hex, M10 x 40, 8.8, Full Thd,
19	140045	6	WASHER, SPRING, Belleville, M10,
20	9706704	2	BOLT, Hex, M10 x 35, 8.8, Full Thd,
21	9706685	4	NUT, M12, Cl 8,
22	140046	5	WASHER, Belleville, M12,
23	300649	2	RING, SNAP,
24	84452155	1	BEARING ASSY,
25	80395606	1	WASHER,
26	100016	3	NUT, M10, Cl 8,
27	84452384	1	SUPPORT,
28	84431514	1	HINGE,
29	378244	AR	WASHER, M10,
30	84452387	1	TIE-ROD,
31	100037	1	NUT, M10 x 1.5, Cl 8,
32	84452396	1	INDICATOR,
33	440651	1	SPRING,
34	378245	1	WASHER, M12,
35	412126	1	NUT, LOCK, M12 x 1.75, Cl 8,
36	84452112	1	BELT,
37	80370008	1	RING, SNAP,
38	301652	1	RING, SNAP, M110, Int,
39	388069	1	BEARING ASSY,
40	84452357	1	LEVER, IDLER,
41	84452194	1	PULLEY,
42	374889	1	BOLT, Hex, M16 x 100, 8.8,
43	9706755	3	NUT, M6, Cl 8,

CSX7080 C659 - COMBINE (9/06-8/08)

18.84079203(01) LOW RPM FAN VARIATOR

ссылка	Номер детали	Кол-во	Описание
44	322357	3	WASHER, SPRING, Belleville, M6,
45	86508568	3	SCREW, Hex, M6 x 16, 8.8,
46	427248	1	BUSHING,
47	84441735	2	HALF-PULLEY,
48	443898	2	BEARING, BALL,
49	430235	1	SPACER,
50	140093	1	WASHER,
51	300388	1	SCREW, Hex, M12 x 25, 8.8,
	400970	0.025	grease

18.84081346(01) RICE PINS

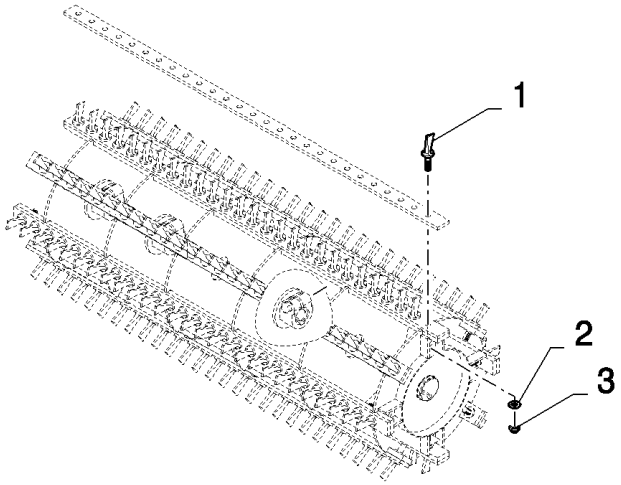

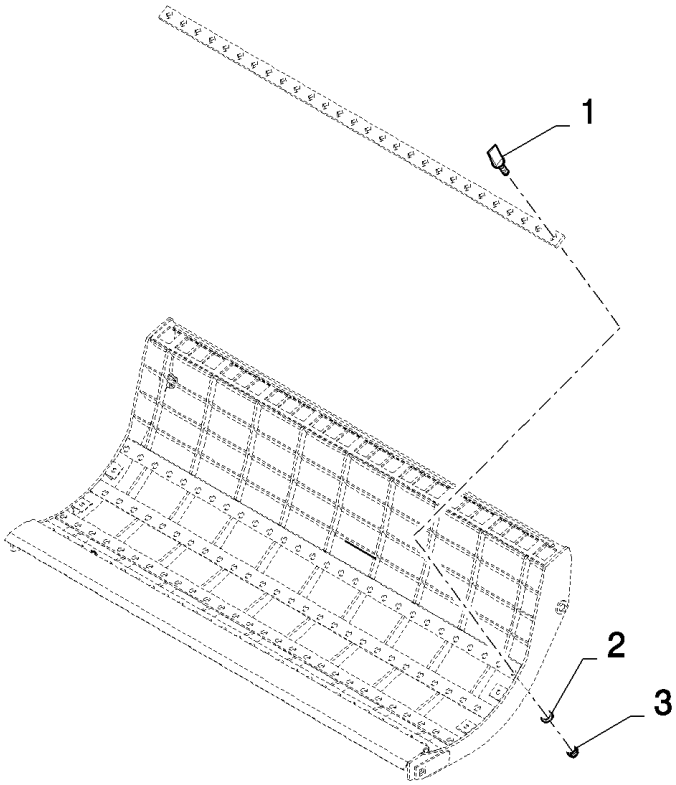

CSX7080 C659 - COMBINE (9/06-8/08)

18.84081346(01) RICE PINS

ссылка	Номер детали	Кол-во	Описание
	84081346		DIA KIT, HARVESTER,
1	396935	25	TOOTH, RICE,
2	394631	25	WASHER, 16MM
3	86000441	25	NUT, M16 x 2, Cl 8,

CSX7080 C659 - COMBINE (9/06-8/08)

18.84081382(01) SUITCASE WEIGHTS - SET OF 12 WEIGHTS - 420KG

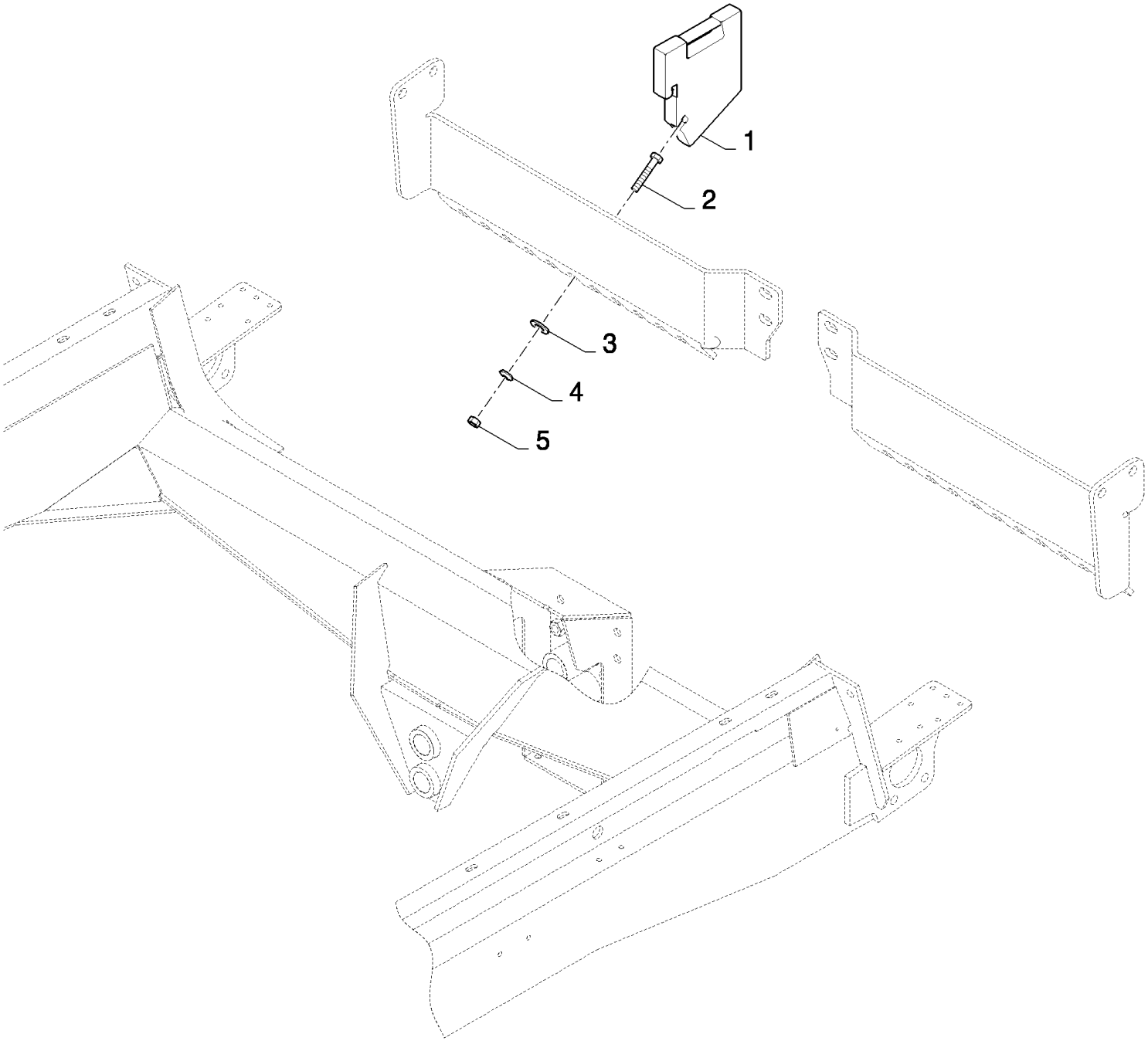

CSX7080 C659 - COMBINE (9/06-8/08)

18.84081382(01) SUITCASE WEIGHTS - SET OF 12 WEIGHTS - 420KG

ссылка	Номер детали	Кол-во	Описание
	84081382		DIA KIT, HARVESTER,
1	84435924	12	WEIGHT, ADVANCE DEVICE,
2	120092	12	SCREW, Hex, M16 x 70, 8.8,
3	451743	12	WASHER,
4	140048	12	WASHER, SPRING, Belleville, M16,
5	100020	12	NUT, M16, Cl 8,

CSX7080 C659 - COMBINE (9/06-8/08)

18.84081383(01) SUITCASE WEIGHTS - SET OF 10 WEIGHTS - 350KG

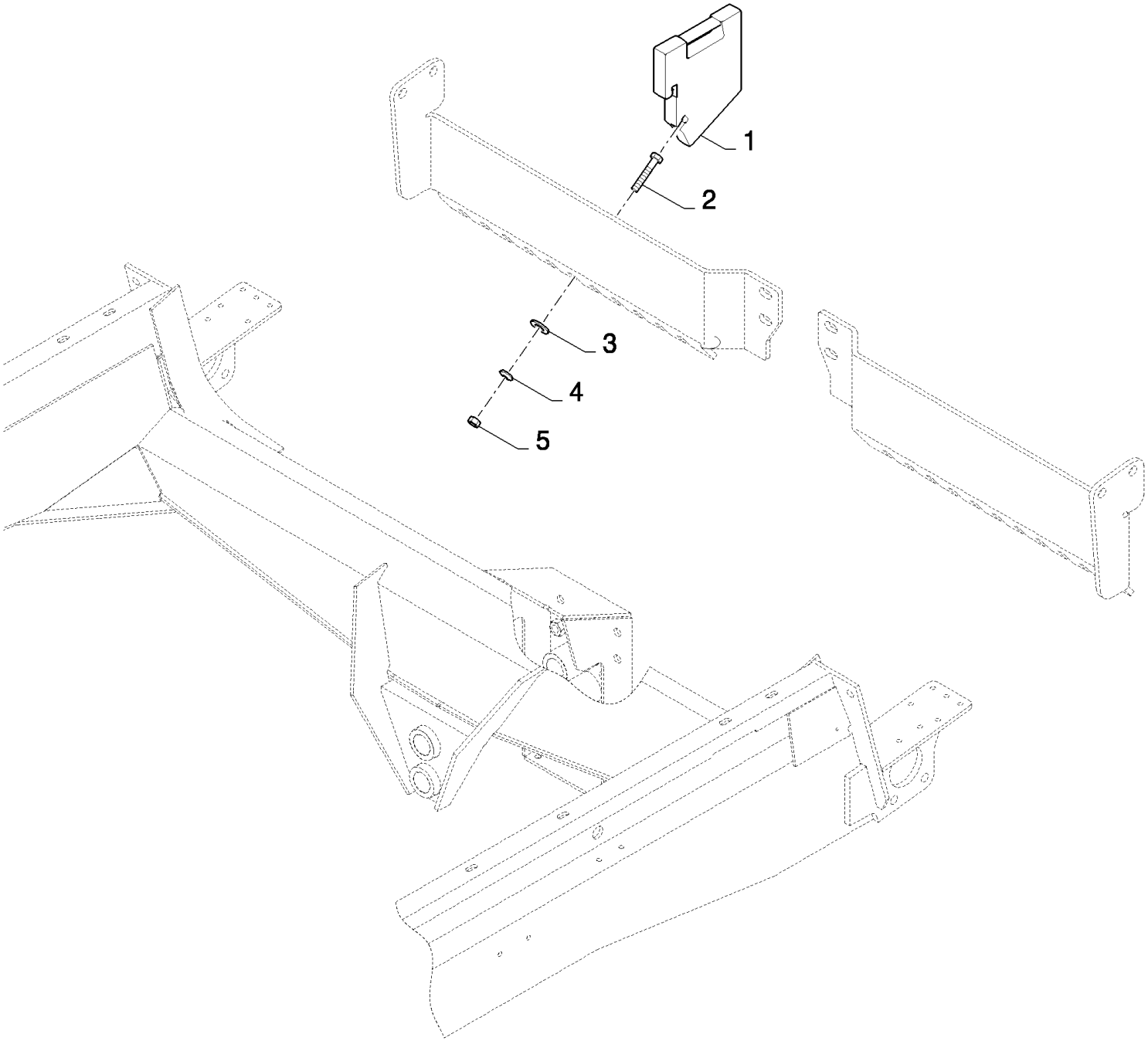

CSX7080 C659 - COMBINE (9/06-8/08)

18.84081383(01) SUITCASE WEIGHTS - SET OF 10 WEIGHTS - 350KG

ссылка	Номер детали	Кол-во	Описание
	84081383		DIA KIT, HARVESTER,
1	84435924	10	WEIGHT, ADVANCE DEVICE,
2	120092	10	SCREW, Hex, M16 x 70, 8.8,
3	451743	10	WASHER,
4	140048	10	WASHER, SPRING, Belleville, M16,
5	100020	10	NUT, M16, Cl 8,

CSX7080 C659 - COMBINE (9/06-8/08)

18.84085582(01) FAN BOTTOM SHIELD

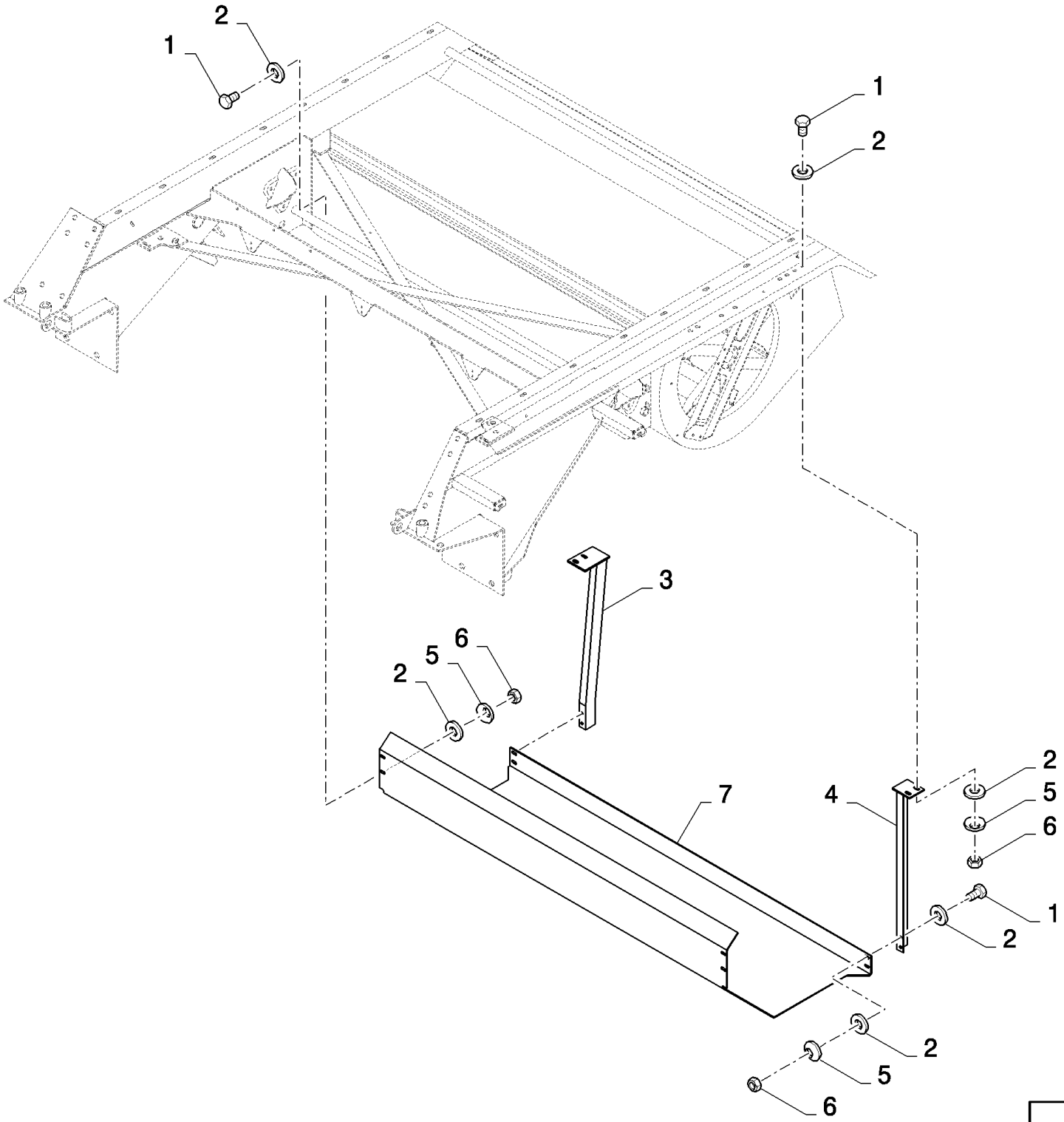

CSX7080 C659 - COMBINE (9/06-8/08)

18.84085582(01) FAN BOTTOM SHIELD

ссылка	Номер детали	Кол-во	Описание
	84085582		FAN BOTTOM SHIELD,
1	43127	12	BOLT, Hex, M8 x 25, 8.8,
2	378243	24	WASHER, M8,
3	80424732	1	SUPPORT,
4	80424728	1	SUPPORT,
5	322358	12	WASHER, SPRING, Belleville, M8,
6	9706690	12	NUT, M8, Cl 8,
7	84432609	1	PLATE,

CSX7080 C659 - COMBINE (9/06-8/08)

18.84085584(01) ROUND HOLE SIEVE - 16 MM

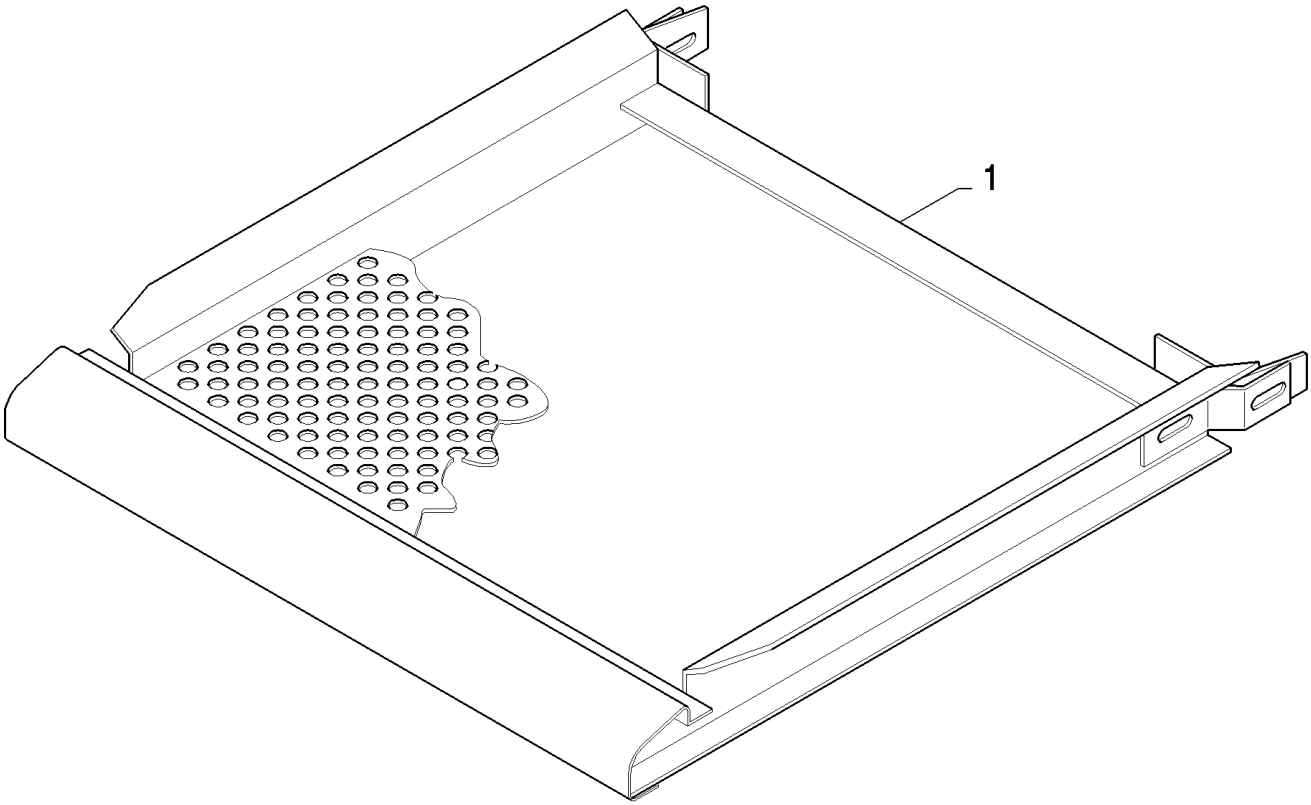

CSX7080 C659 - COMBINE (9/06-8/08)

18.84085584(01) ROUND HOLE SIEVE - 16 MM

ссылка	Номер детали	Кол-во	Описание
	84085584		DIA KIT, HARVESTER,
1	390370	2	

CSX7080 C659 - COMBINE (9/06-8/08)

18.84085586(01) ROUND HOLE SIEVE - 18 MM

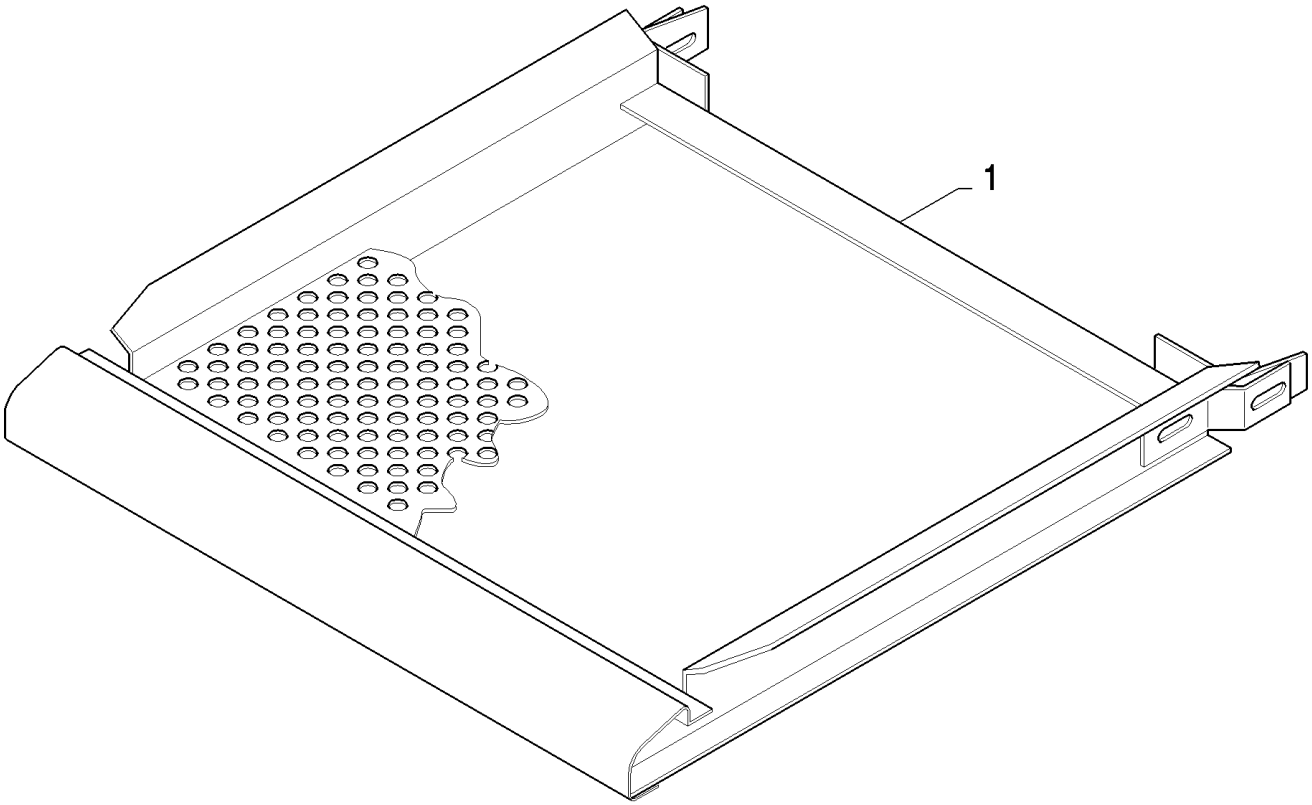

CSX7080 C659 - COMBINE (9/06-8/08)

18.84085586(01) ROUND HOLE SIEVE - 18 MM

ссылка	Номер детали	Кол-во	Описание
	84085586		DIA KIT, HARVESTER,
1	80390371	2	

CSX7080 C659 - COMBINE (9/06-8/08)

18.84085604(01) PERFORATED COVERS LONG

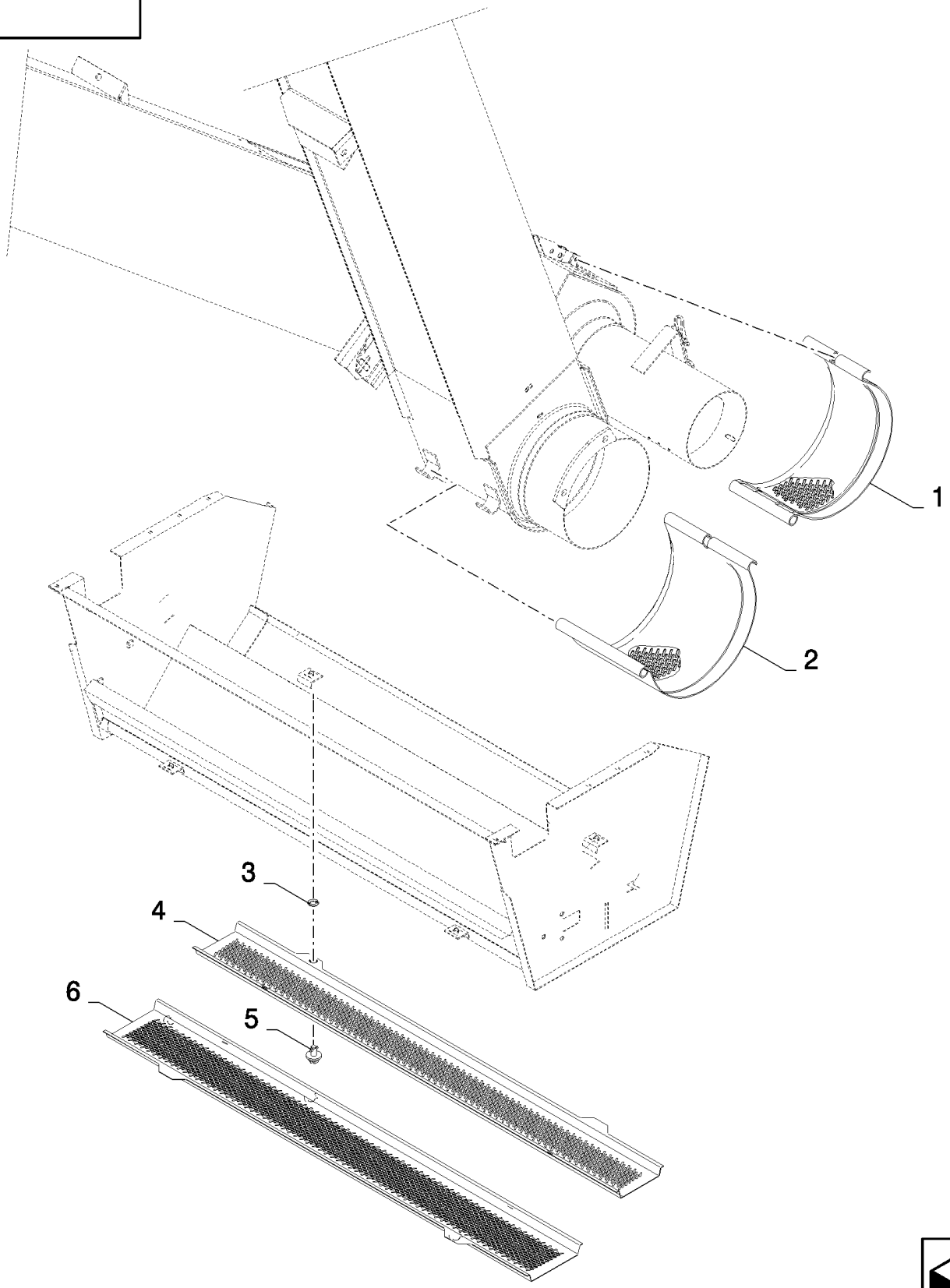

CSX7080 C659 - COMBINE (9/06-8/08)

18.84085604(01) PERFORATED COVERS LONG

ссылка	Номер детали	Кол-во	Описание
	84085604		DIA KIT, HARVESTER,
1	84982640	1	GUARD,
2	84982648	1	GUARD,
3	9514605	4	WASHER,
4	84982659	1	GUARD,
5	89514603	4	LOCK,
6	84982657	1	GUARD,

18.84085609(01) STEERING PLATFORM EXTENSION - 200MM

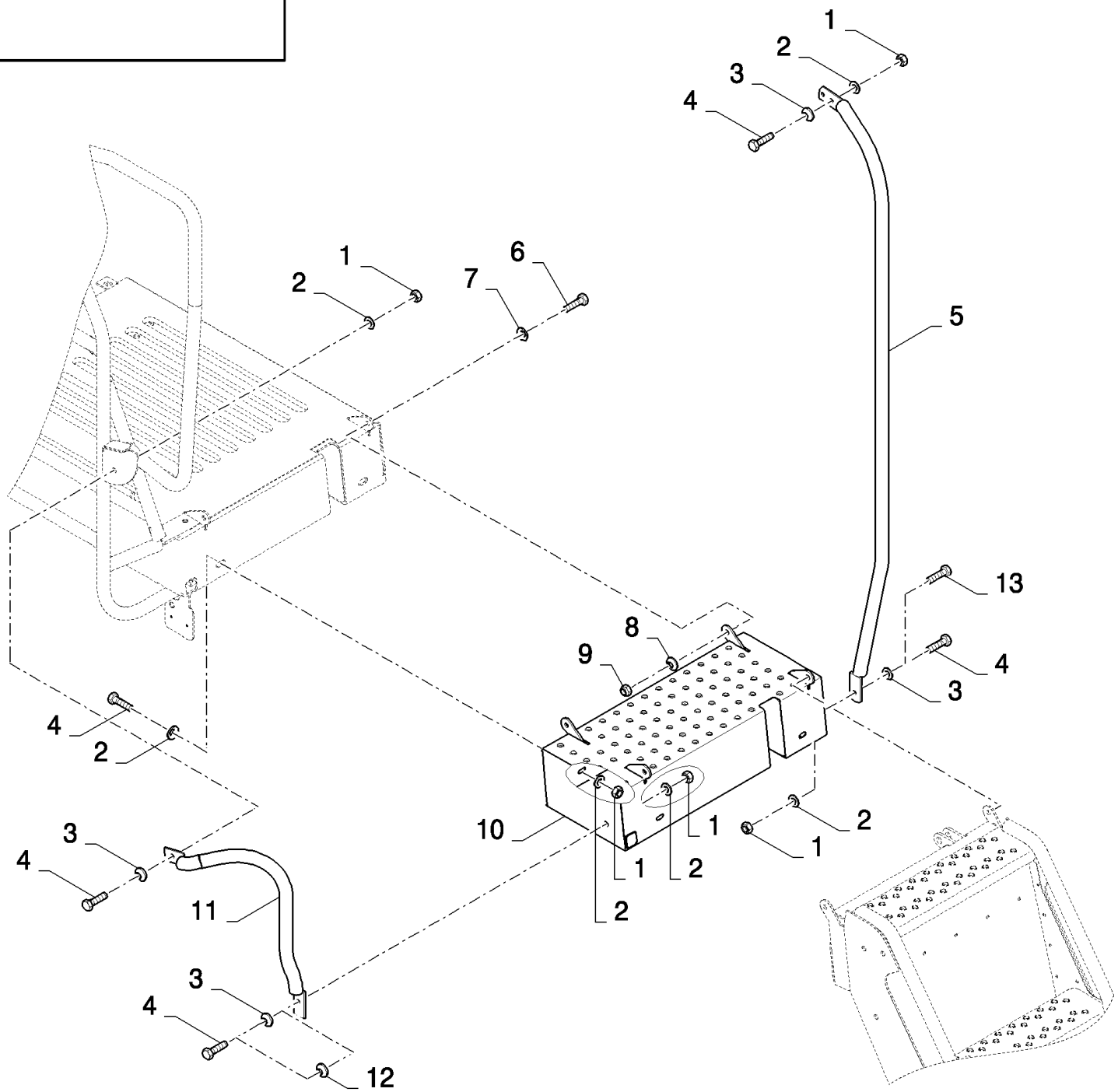

CSX7080 C659 - COMBINE (9/06-8/08)

18.84085609(01) STEERING PLATFORM EXTENSION - 200MM

ссылка	Номер детали	Кол-во	Описание
	84085609		DIA KIT, HARVESTER,
1	9706690	5	NUT, M8, Cl 8,
2	322358	3	WASHER, SPRING, Belleville, M8,
3	140016	2	WASHER, M8 x 16 x 1.6,
4	43128	4	BOLT, Hex, M8 x 30, 8.8,
5	84077985	1	HANDRAIL,
6	43139	3	SCREW, Hex, M10 x 25, 8.8, Full Thd, M10x25
7	378244	2	WASHER, M10,
8	140045	4	WASHER, SPRING, Belleville, M10,
9	100037	2	NUT, M10 x 1.5, Cl 8,
10	84077653	1	EXTENSION,
11	84077977	1	HANDRAIL,
12	86511315	5	WASHER, M8 x 16 x 1.6,
13	43140	1	BOLT, Hex, M10 x 30, 8.8, Full Thd,

18.84085610(01) STEERING PLATFORM EXTENSION - 400MM

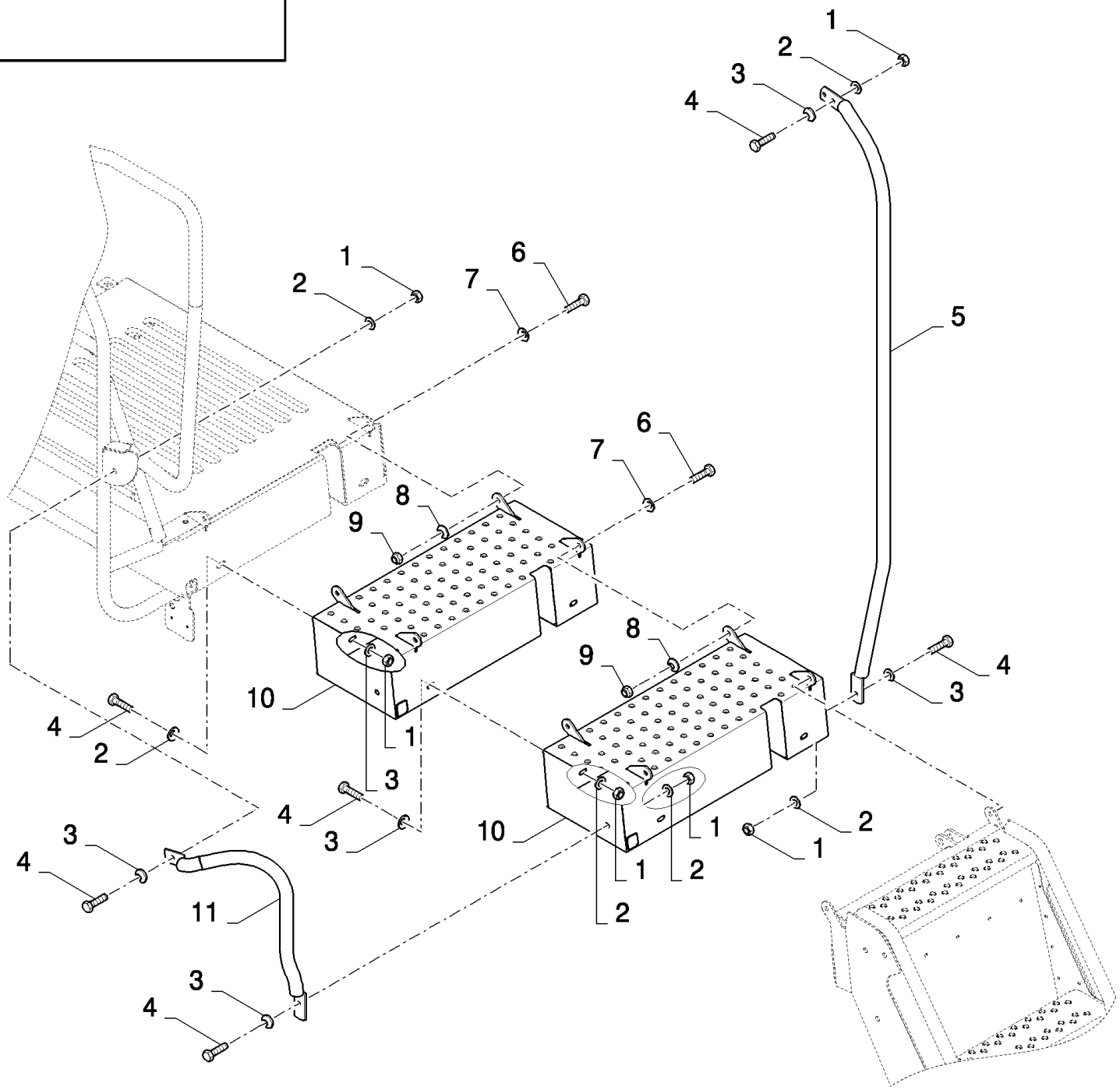

CSX7080 C659 - COMBINE (9/06-8/08)

18.84085610(01) STEERING PLATFORM EXTENSION - 400MM

ссылка	Номер детали	Кол-во	Описание
	84085610		DIA KIT, HARVESTER,
1	9706690	8	NUT, M8, Cl 8,
2	322358	8	WASHER, SPRING, Belleville, M8,
3	140016	8	WASHER, M8 x 16 x 1.6,
4	43128	8	BOLT, Hex, M8 x 30, 8.8,
5	84447245	1	HANDRAIL,
6	43139	4	SCREW, Hex, M10 x 25, 8.8, Full Thd, M10x25
7	378244	4	WASHER, M10,
8	140045	4	WASHER, SPRING, Belleville, M10,
9	100037	4	NUT, M10 x 1.5, Cl 8,
10	84077653	2	EXTENSION,
11	84435910	1	HANDRAIL,

CSX7080 C659 - COMBINE (9/06-8/08)

18.84085617(01) COUNTERWEIGHTS WHEELS - 400KG

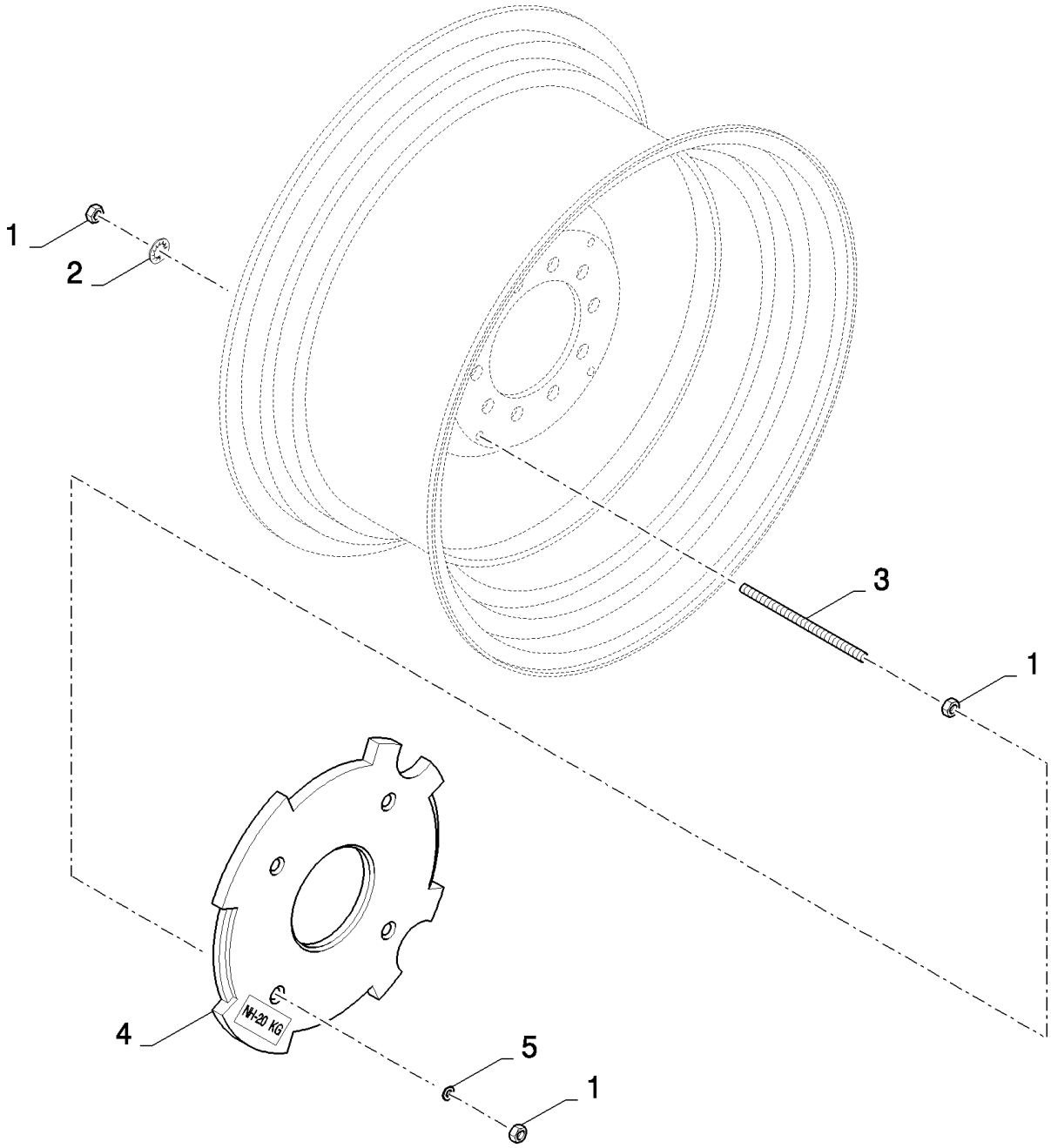

CSX7080 C659 - COMBINE (9/06-8/08)

18.84085617(01) COUNTERWEIGHTS WHEELS - 400KG

ссылка	Номер детали	Кол-во	Описание
	84085617		DIA KIT, HARVESTER,
1	9706685	24	NUT, M12, Cl 8,
2	300913	8	WASHER, LOCK, 12.5MM
3	84989795	8	ROD, THREADED, M12x383
4	84438813	20	WEIGHT, COUNTER,
5	394630	8	WASHER, 13MM

18.84085618(01) COUNTERWEIGHTS WHEELS - 200KG

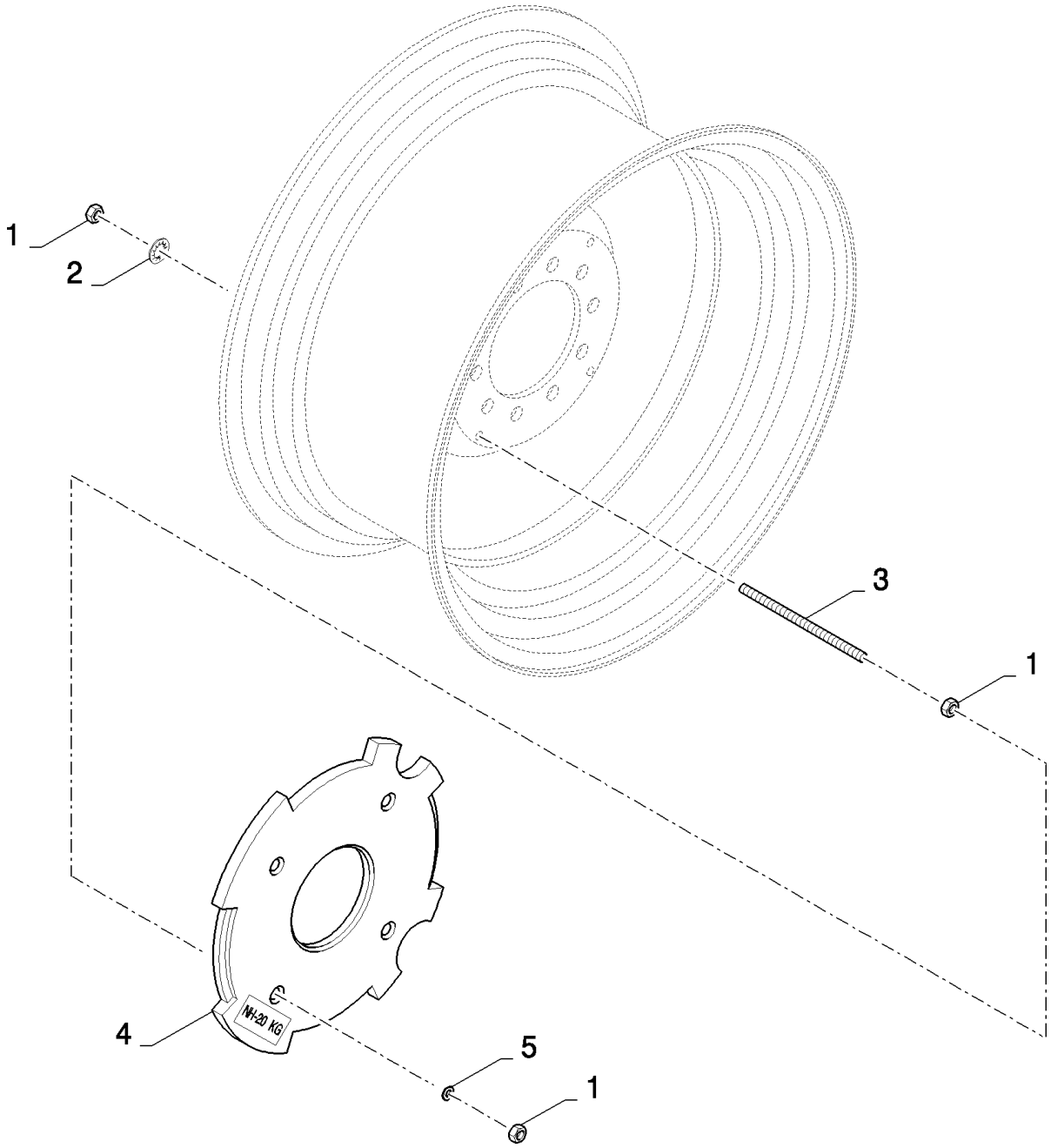

CSX7080 C659 - COMBINE (9/06-8/08)

18.84085618(01) COUNTERWEIGHTS WHEELS - 200KG

ссылка	Номер детали	Кол-во	Описание
	84085618		DIA KIT, HARVESTER,
1	9706685	24	NUT, M12, Cl 8,
2	300913	8	WASHER, LOCK, 12.5MM
3	84989794	8	ROD, THREADED, M12x220
4	84438813	10	WEIGHT, COUNTER,
5	394630	8	WASHER, 13MM

18.84085621(01) ADDITIONAL LIFTING RAM FRONT ELEVATOR FOR CORN HEADER

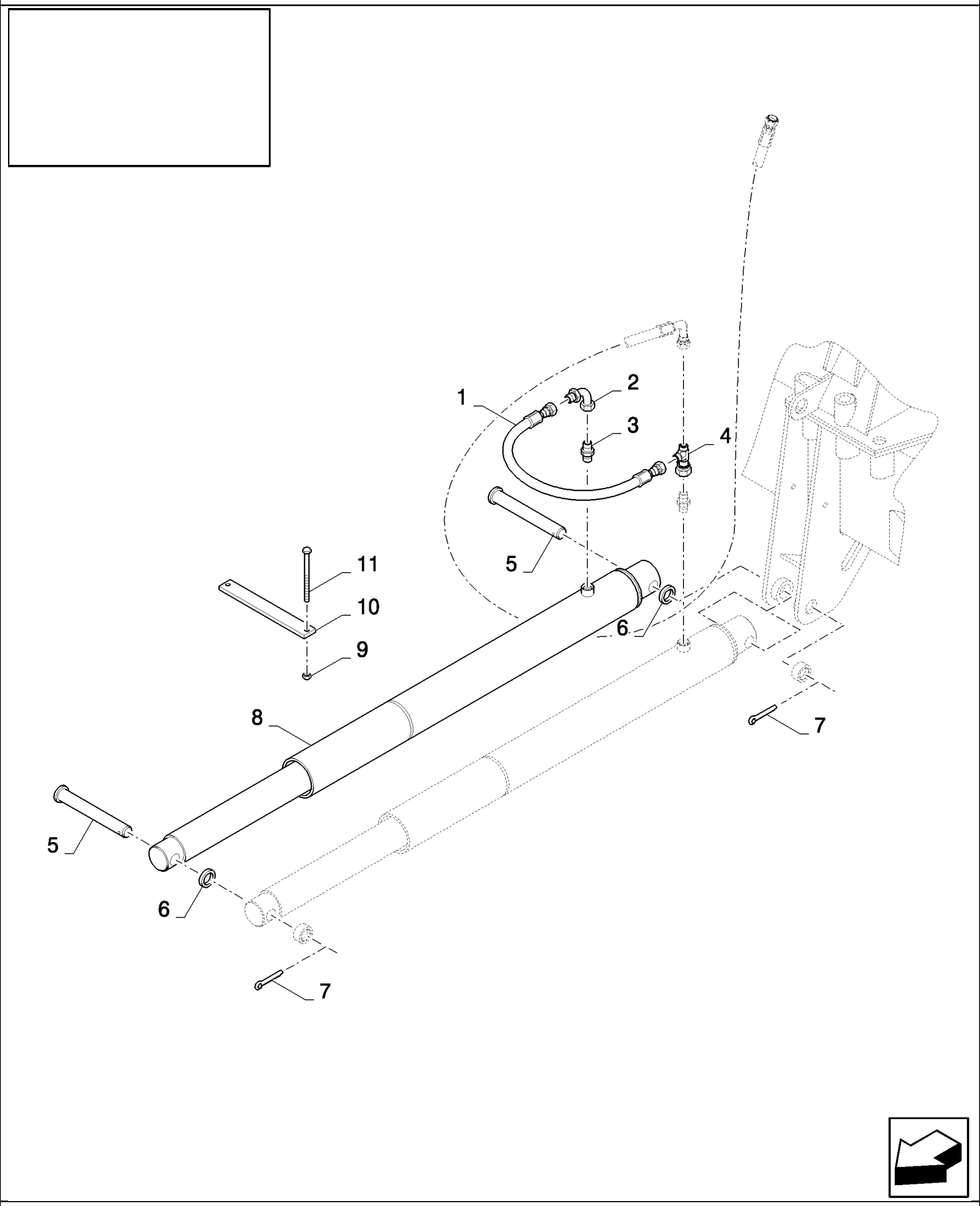

CSX7080 C659 - COMBINE (9/06-8/08)

18.84085621(01) ADDITIONAL LIFTING RAM FRONT ELEVATOR FOR CORN HEADER

ссылка	Номер детали	Кол-во	Описание
	84085621		DIA KIT, HARVESTER,
1	9833953	1	HOSE,
2	9508529	1	ELBOW,
3	395782	1	CONNECTOR, HYD.,
4	84455036	1	CONNECTION, 3 WAY,
5	84440399	2	PIN,
6	84071288	2	WASHER,
7	300423	2	PIN, SPLIT (COTTER), M6.3 x 50,
8	84444496	1	CYLINDER,
9	100037	2	NUT, M10 x 1.5, Cl 8,
10	84440400	2	BRACKET,
11	86508573	2	SCREW, Hex, M10 x 110, 8.8, M10x110

CSX7080 C659 - COMBINE (9/06-8/08)

18.84085821(01) STUBBLE & REAR WORKLIGHT

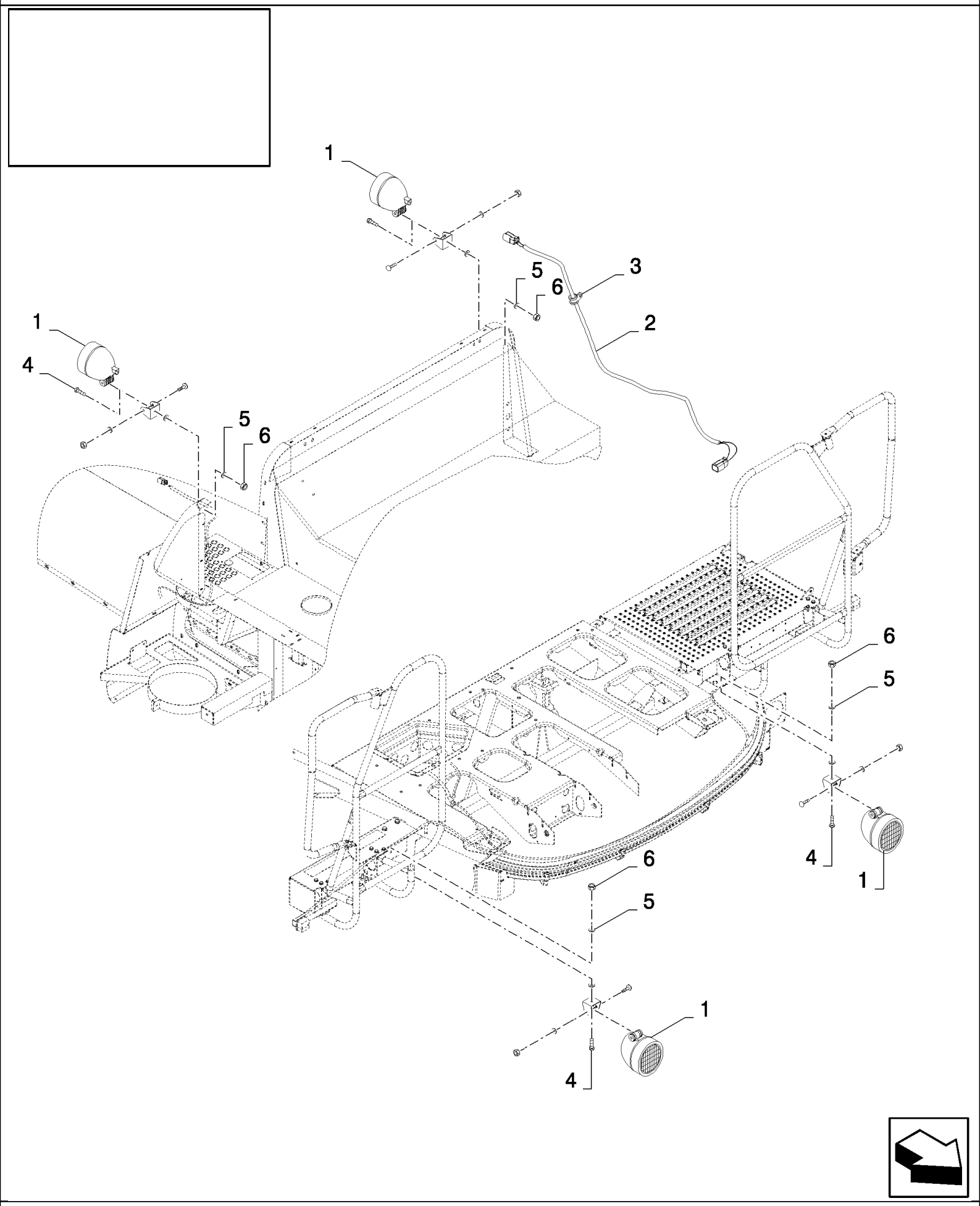

CSX7080 C659 - COMBINE (9/06-8/08)

18.84085821(01) STUBBLE & REAR WORKLIGHT

ссылка	Номер детали	Кол-во	Описание
	84085821		DIA KIT, HARVESTER,
1	84607497	4	LAMP,
2	84437327	1	HARNESS, WIRE,
3	272535	5	CLAMP, 1/8", Insul, 1/4" Bolt,
4	43139	4	SCREW, Hex, M10 x 25, 8.8, Full Thd, M10x25
5	86511323	4	WASHER, M10 x 20 x 2,
6	100037	4	NUT, M10 x 1.5, Cl 8,

CSX7080 C659 - COMBINE (9/06-8/08)

18.84085824(01) FIXED HEADER TRAILER HITCH - SPAIN & ITALY

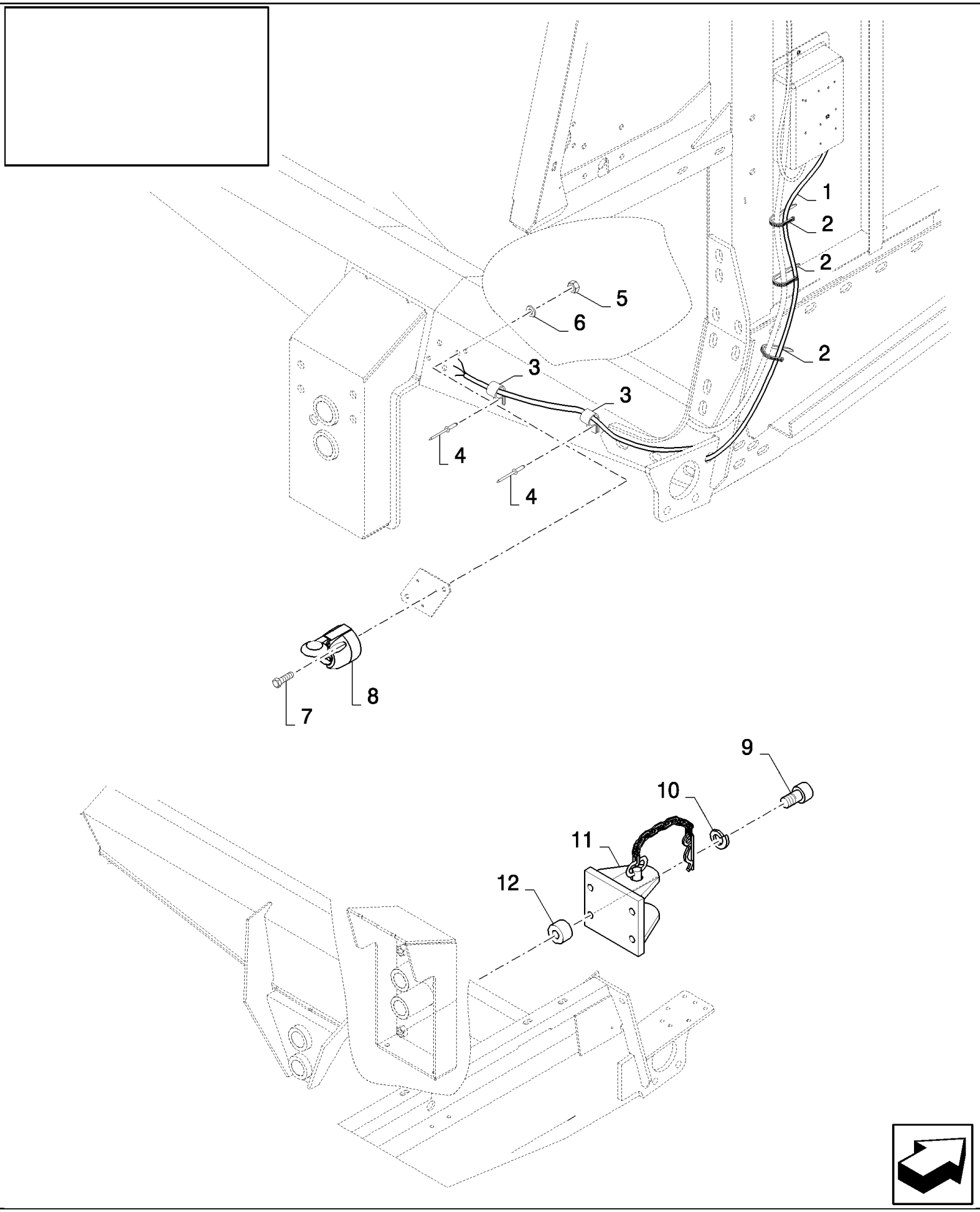

CSX7080 C659 - COMBINE (9/06-8/08)

18.84085824(01) FIXED HEADER TRAILER HITCH - SPAIN & ITALY

ссылка	Номер детали	Кол-во	Описание
	84085824		DIA KIT, HARVESTER,
1	84437294	1	HARNESS, WIRE,
2	89993154	5	CLAMP,
3	9503929	2	CLAMP,
4	9512290	2	RIVET,
5	100012	3	NUT, M4, Cl 8,
6	322355	3	WASHER, Belleville, M4,
7	86585707	3	SCREW, Cross Pan Hd, M4 x 35, M4x35
8	398224	1	SOCKET, POWER,
9	9838120	4	SCREW,
10	86729275	4	WASHER, LOCK, 5/8", (M16)
11	84400985	1	HITCH,
12	355392	4	SPACER,
	84433130	1	DECAL,
	84462829	1	DECAL,

CSX7080 C659 - COMBINE (9/06-8/08)

18.84085826(01) ROTATION HEADER TRAILER HITCH

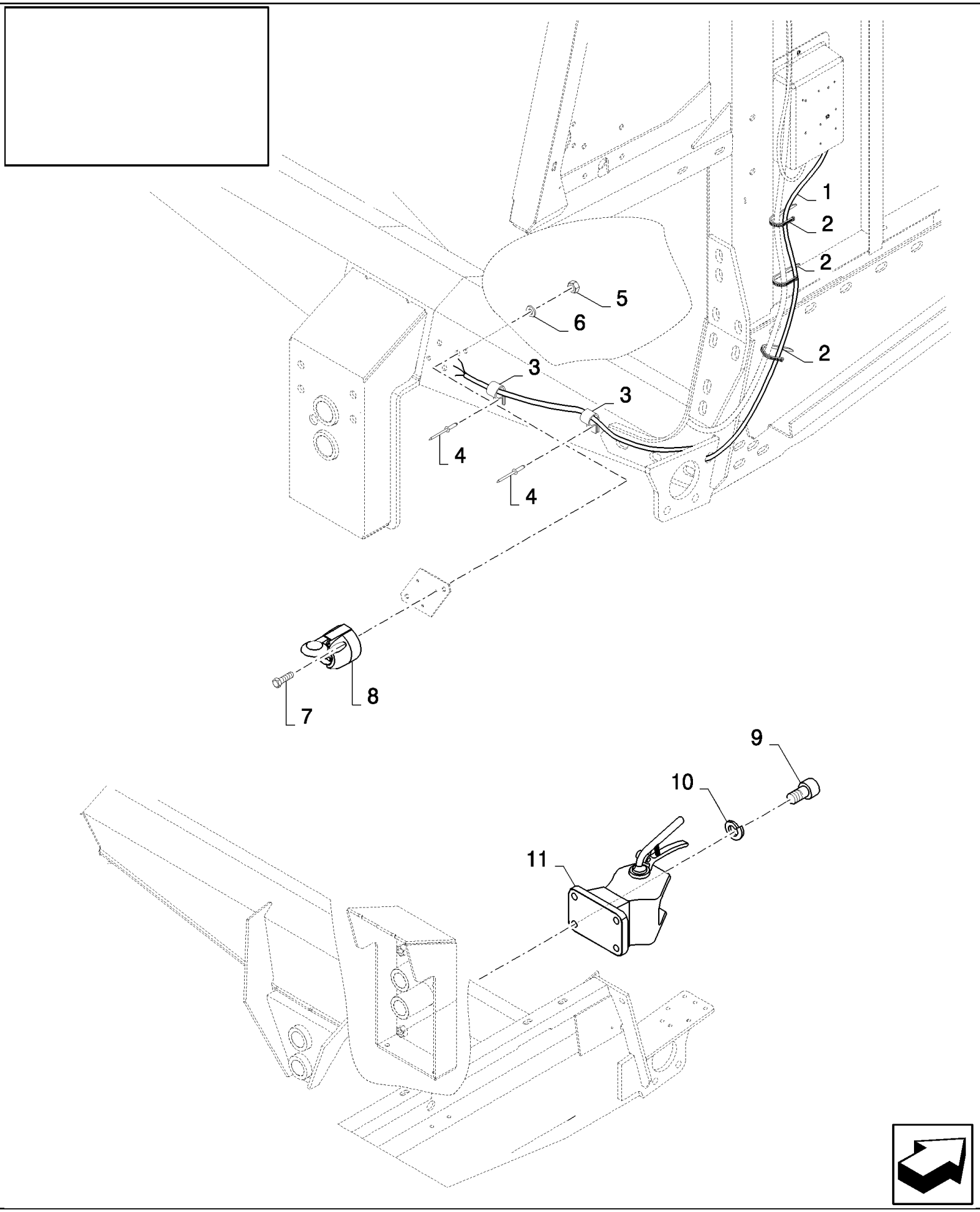

CSX7080 C659 - COMBINE (9/06-8/08)

18.84085826(01) ROTATION HEADER TRAILER HITCH

ссылка	Номер детали	Кол-во	Описание
	84085826		DIA KIT, HARVESTER,
1	84437294	1	HARNESS, WIRE,
2	89993154	5	CLAMP,
3	9503929	2	CLAMP,
4	9512290	2	RIVET, RIVET
5	100012	3	NUT, M4, Cl 8,
6	322355	3	WASHER, Belleville, M4,
7	86585707	3	SCREW, Cross Pan Hd, M4 x 35, M4x35
8	398224	1	SOCKET, POWER,
9	9817243	4	SCREW, Hex Soc Hd, M16 x 50, 12.9, M16x50
10	86729275	4	WASHER, LOCK, 5/8", (M16)
11	84607012	1	TOW HOOK,
	84334828	1	DECAL,
	84433130	1	DECAL,
	84462829	1	DECAL,

18.84085849(01) AXLE EXTENSION KIT

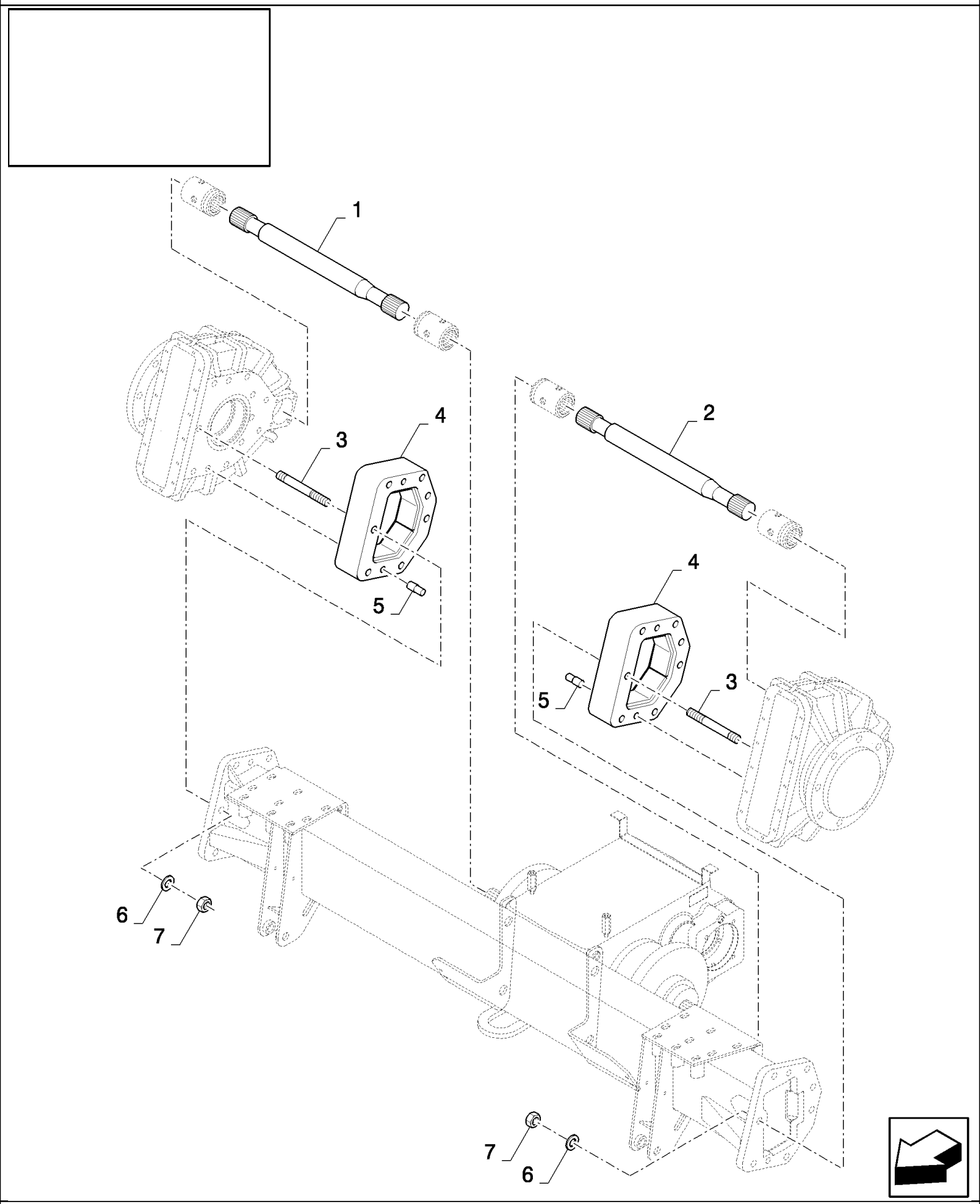

CSX7080 C659 - COMBINE (9/06-8/08)

18.84085849(01) AXLE EXTENSION KIT

ссылка	Номер детали	Кол-во	Описание
	84085849		DIA KIT, HARVESTER,
1	84449075	1	SHAFT, CONTROL,
2	84449072	1	SHAFT, CONTROL,
3	84448850	16	STUD,
4	84448890	2	EXTENSION,
5	84448920	4	PIN,
6	394632	16	WASHER, M20 x 40 x 4, HT,
7	9847024	16	NUT, M20, Cl 10,
	80401624	0.006	LOCTITE

CSX7080 C659 - COMBINE (9/06-8/08)

18.84085882(01) VERTICAL KNIFE ELECTRICITY KIT

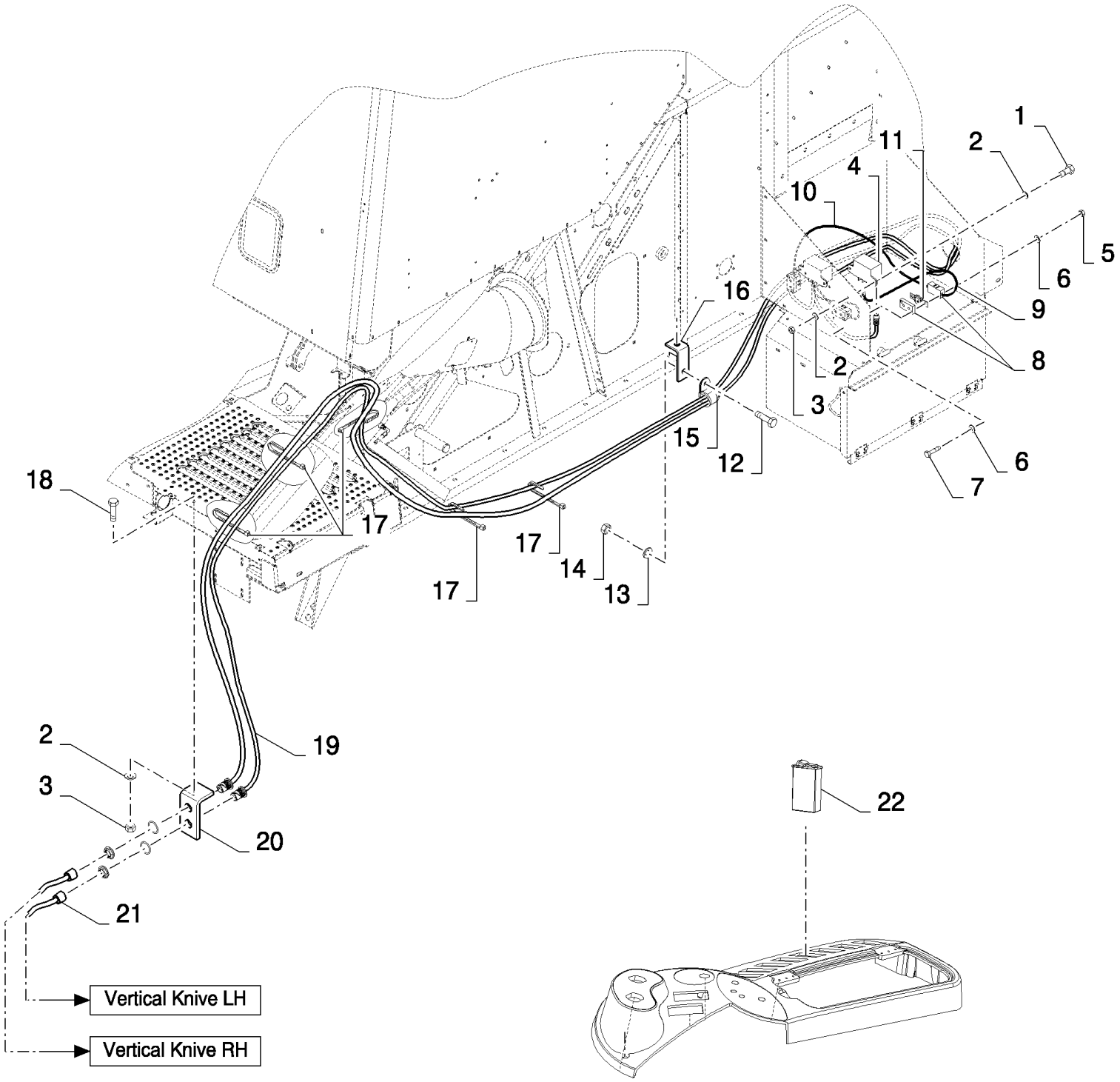

CSX7080 C659 - COMBINE (9/06-8/08)

18.84085882(01) VERTICAL KNIFE ELECTRICITY KIT

ссылка	Номер детали	Кол-во	Описание
	84085882		VERTICAL KNIFE ELECTRICIT,
1	86508568	2	SCREW, Hex, M6 x 16, 8.8,
2	322357	5	WASHER, SPRING, Belleville, M6,
3	15896221	3	NUT, M6, Cl 10,
4	86619908	1	RELAY,
5	86508812	2	NUT, M3, Cl 8,
6	86509827	4	WASHER, LOCK, M3,
7	86511816	2	SCREW, Cross Pan Hd, M3 x 16,
8	84078784	1	FUSE HOLDER,
9	84444505	1	HARNESS, WIRE,
10	84444504	1	HARNESS, WIRE,
11	84320118	1	FUSE, 40A
12	120104	2	SCREW, Hex, M8 x 20, 8.8,
13	322358	2	WASHER, SPRING, Belleville, M8,
14	9706690	2	NUT, M8, Cl 8,
15	9513271	1	CLAMP,
16	84446966	1	BRACKET,
17	89993154	8	CLAMP,
18	120100	1	BOLT, Hex, M6 x 20, 8.8,
19	84444502	1	HARNESS, WIRE,
20	84444610	1	BRACKET,
21	84444503	1	HARNESS, WIRE,
22	84400442	1	SWITCH,

18.84085884(01) ADDITIONAL PORTABLE WORK LIGHT

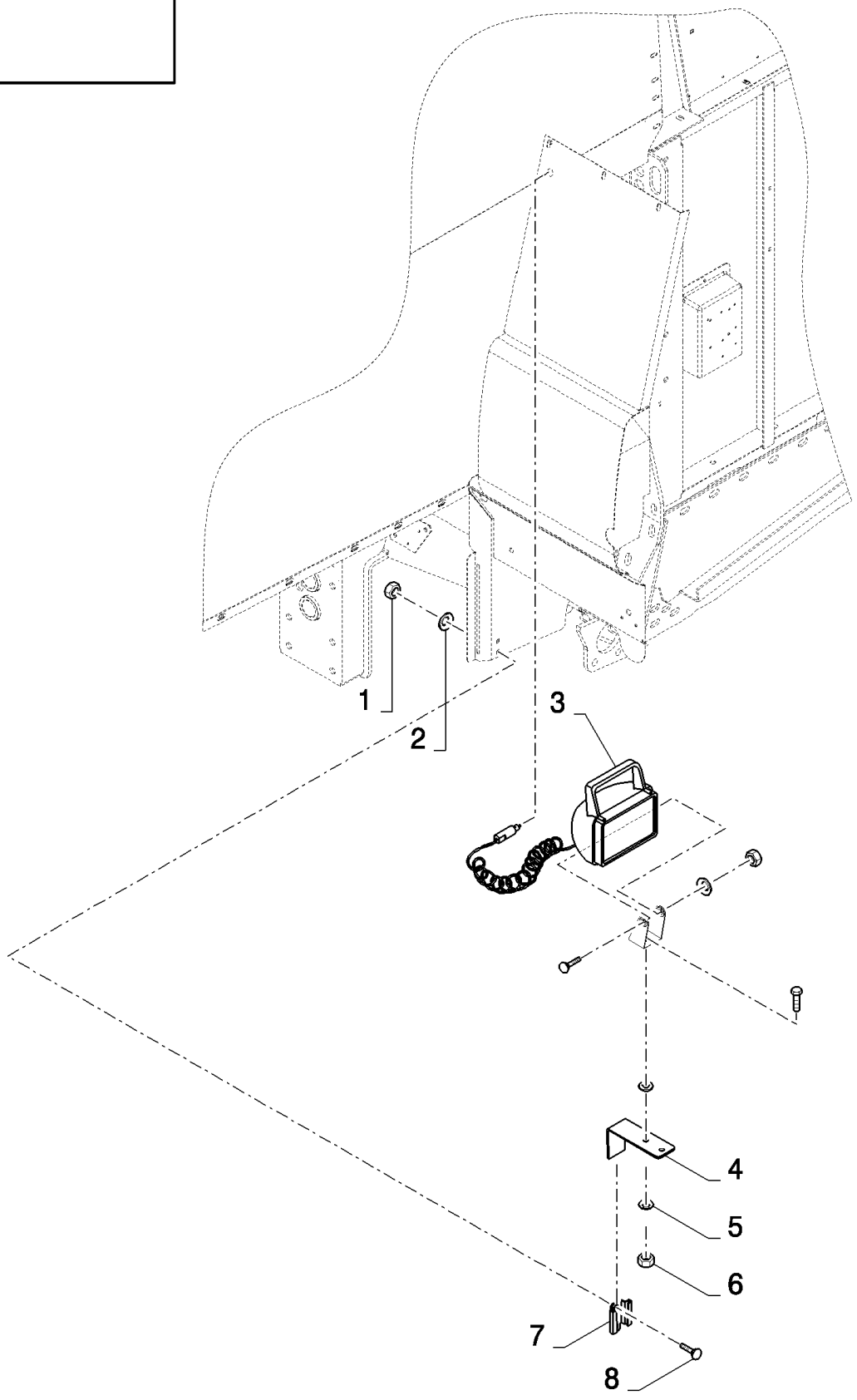

CSX7080 C659 - COMBINE (9/06-8/08)

18.84085884(01) ADDITIONAL PORTABLE WORK LIGHT

ссылка	Номер детали	Кол-во	Описание
	84085884		DIA KIT, HARVESTER,
1	9706690	4	NUT, M8, Cl 8,
2	322358	4	WASHER, SPRING, Belleville, M8,
3	84004176	1	LAMP, WORK,
4	9813909	1	SUPPORT,
5	140045	1	WASHER, SPRING, Belleville, M10,
6	100016	1	NUT, M10, Cl 8,
7	9837606	2	CLIP,
8	86619060	4	BOLT, CARRIAGE, Short NK, M8 x 16, Cl8.8, Full Thd,

CSX7080 C659 - COMBINE (9/06-8/08)

18.84085886(01) FIRE EXTINGUISHER

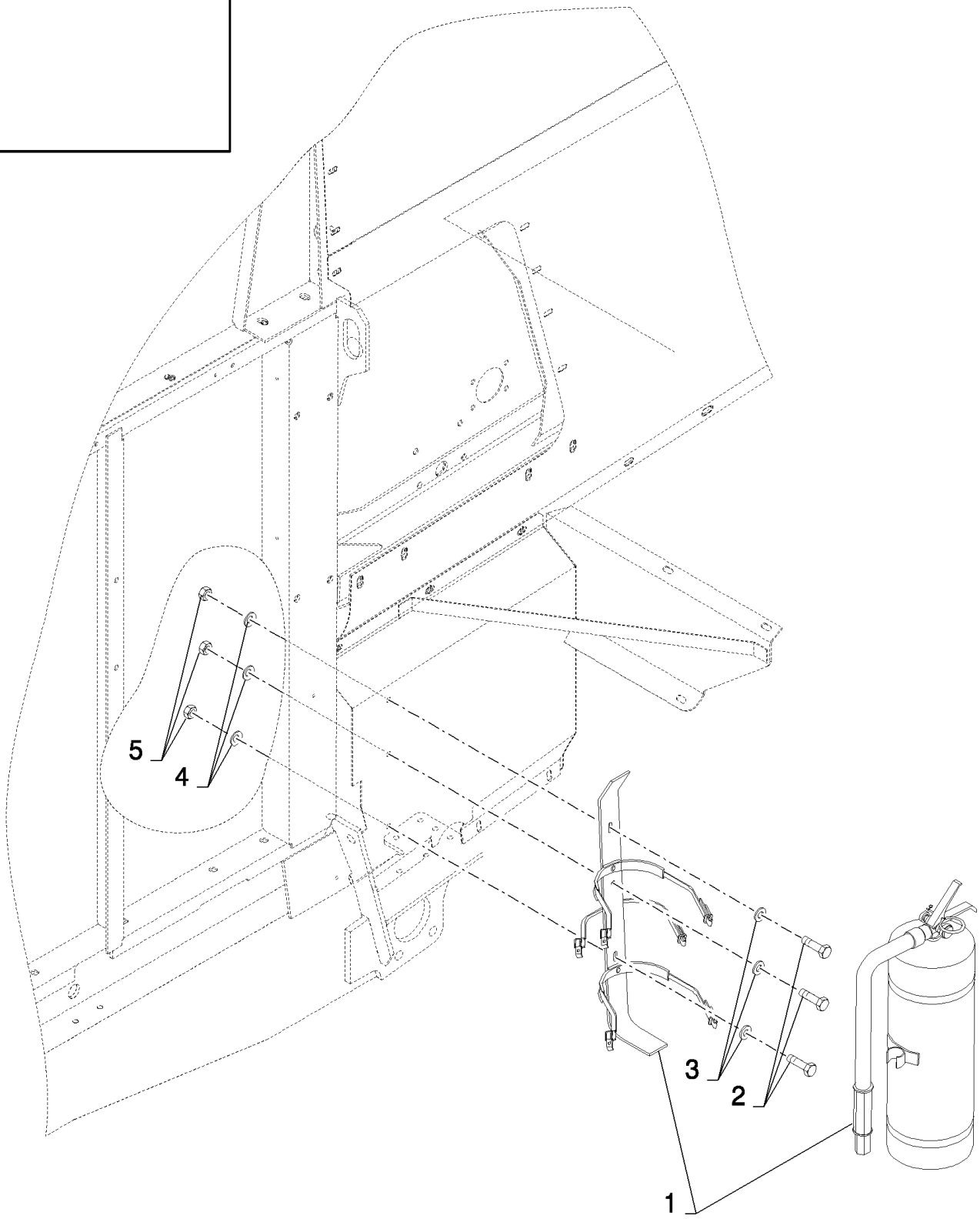

CSX7080 C659 - COMBINE (9/06-8/08)

18.84085886(01) FIRE EXTINGUISHER

ссылка	Номер детали	Кол-во	Описание
	84085886		DIA KIT, HARVESTER,
1	84440547	1	FIRE EXTINGUISHER,
2	120104	3	SCREW, Hex, M8 x 20, 8.8,
3	140016	3	WASHER, M8 x 16 x 1.6,
4	412650	3	WASHER, Belleville, M8,
5	9706690	3	NUT, M8, Cl 8,

CSX7080 C659 - COMBINE (9/06-8/08)

18.84085893(01) BEACONS - FRONT & REAR

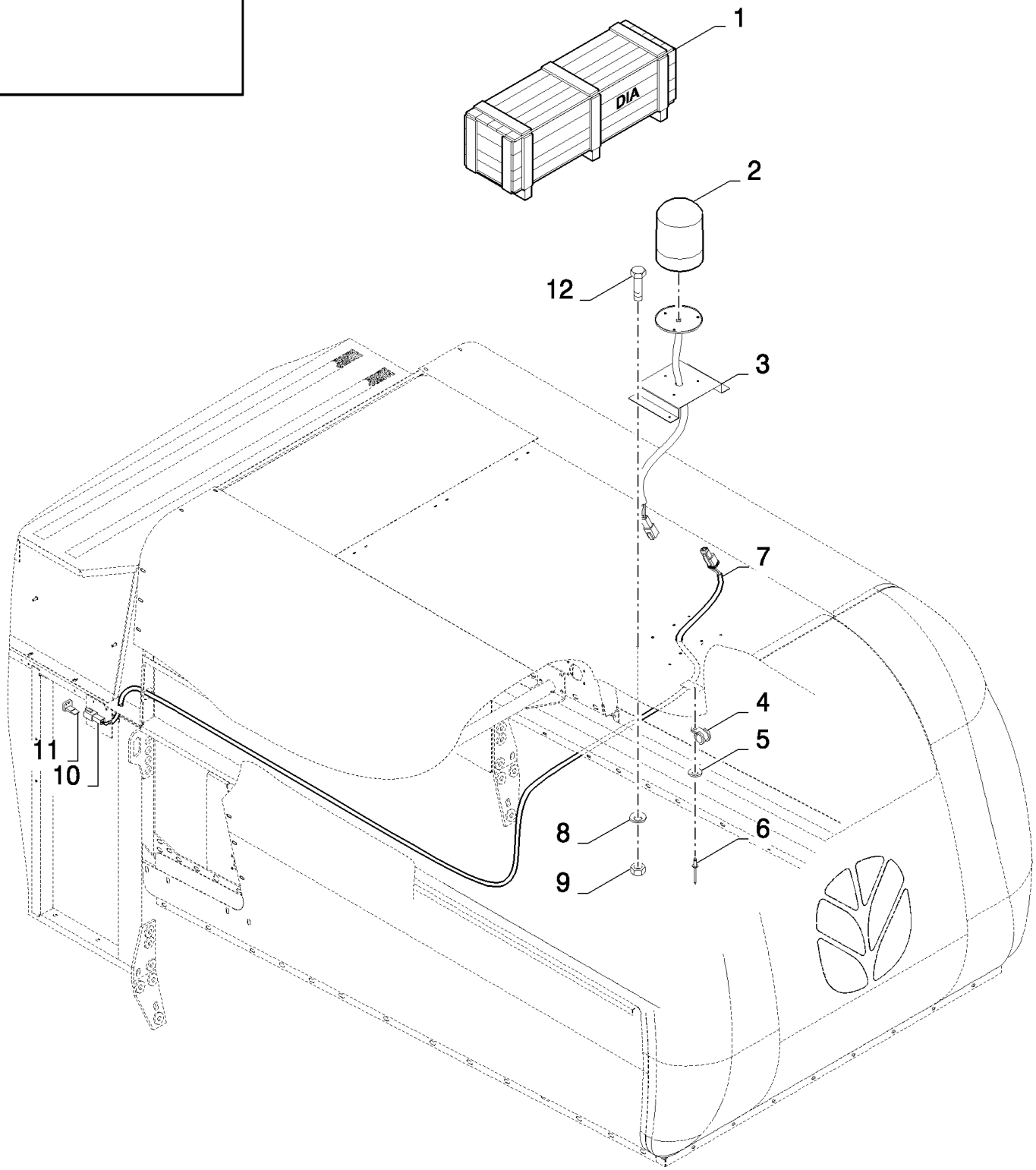

CSX7080 C659 - COMBINE (9/06-8/08)

18.84085893(01) BEACONS - FRONT & REAR

ссылка	Номер детали	Кол-во	Описание
	84085893		DIA KIT, HARVESTER,
1	84085892	1	ROTARY BEACON,
2	84067911	1	BEACON,
3	84439613	1	SUPPORT,
4	9507807	3	CLAMP,
5	322356	3	WASHER, 5MM
6	89512289	3	RIVET, Rivet
7	84437323	1	HARNESS, WIRE,
8	322357	4	WASHER, SPRING, Belleville, M6,
9	15896221	4	NUT, M6, Cl 10,
10	84074630	1	CONNECTOR, WIRE,
11	86500166	1	PLUG,
12	120100	4	BOLT, Hex, M6 x 20, 8.8,
	80401624	0.03	loctite

18.84085898(01) WINDSCREEN WASHER KIT

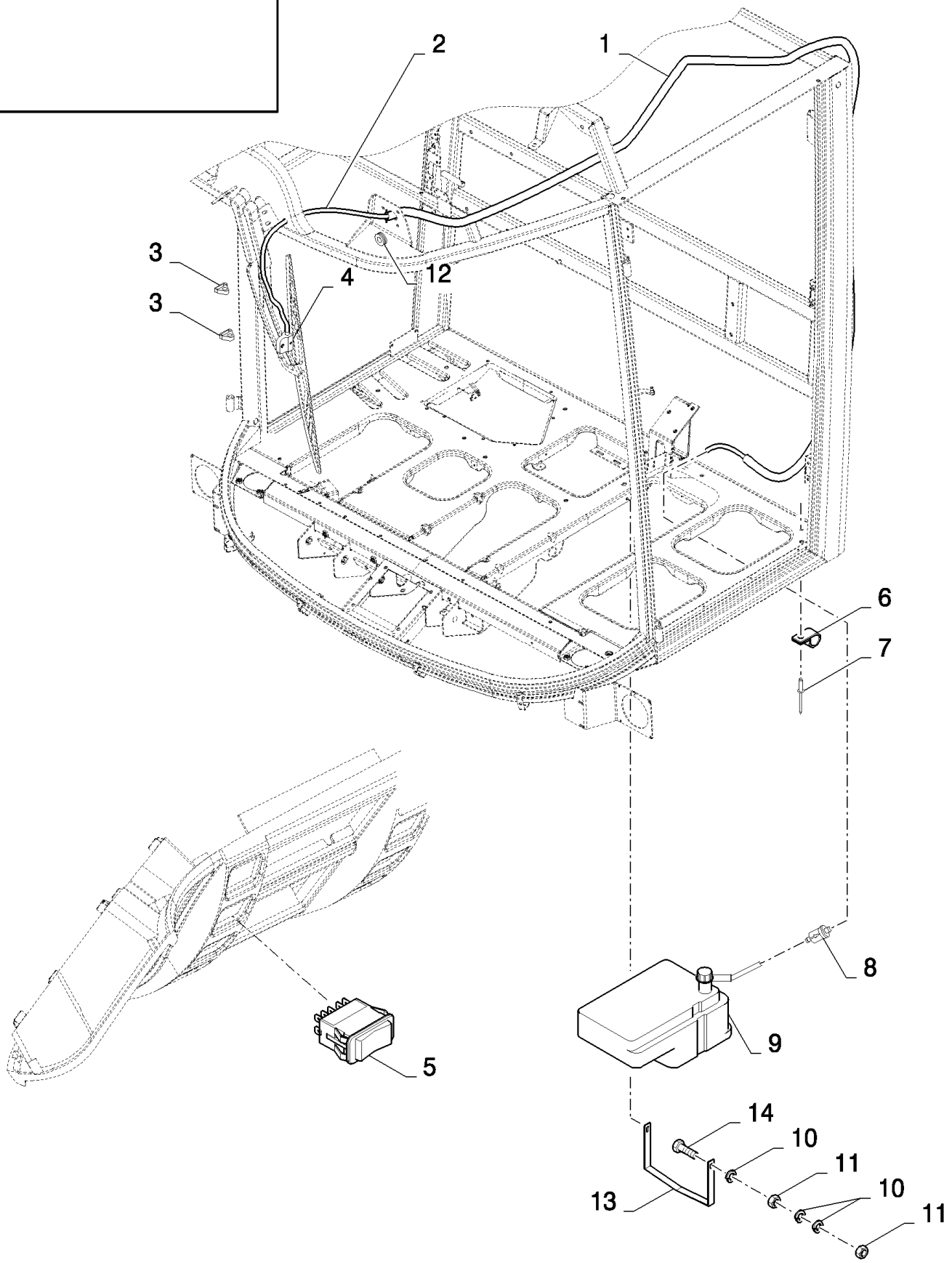

CSX7080 C659 - COMBINE (9/06-8/08)

18.84085898(01) WINDSCREEN WASHER KIT

ссылка	Номер детали	Кол-во	Описание
	84085898		DIA KIT, HARVESTER,
1	89507813	1	L=3.3M
2	84037518	1	HOSE, L=6M
3	84442498	4	CLIP,
4	84442497	1	NOZZLE,
5	84320665	1	SWITCH,
6	84818443	2	CLAMP,
7	9512968	2	RIVET, Rivet
8	84037530	1	VALVE, CHECK,
9	84002498	1	RESERVOIR, WINDSH. WASH,
10	322357	6	WASHER, SPRING, Belleville, M6,
11	15896221	4	NUT, M6, Cl 10,
12	46288	1	GROMMET,
13	84002499	1	CLAMP,
14	86977786	2	BOLT, Hex, M6 x 25, 8.8,
	89513508	1	WATER
	80401269	0.001	GLYCERINE
	85700895	1	ANTI-FREEZE

18.84085921(01) SECOND GRAIN TANK LEVEL SENSOR

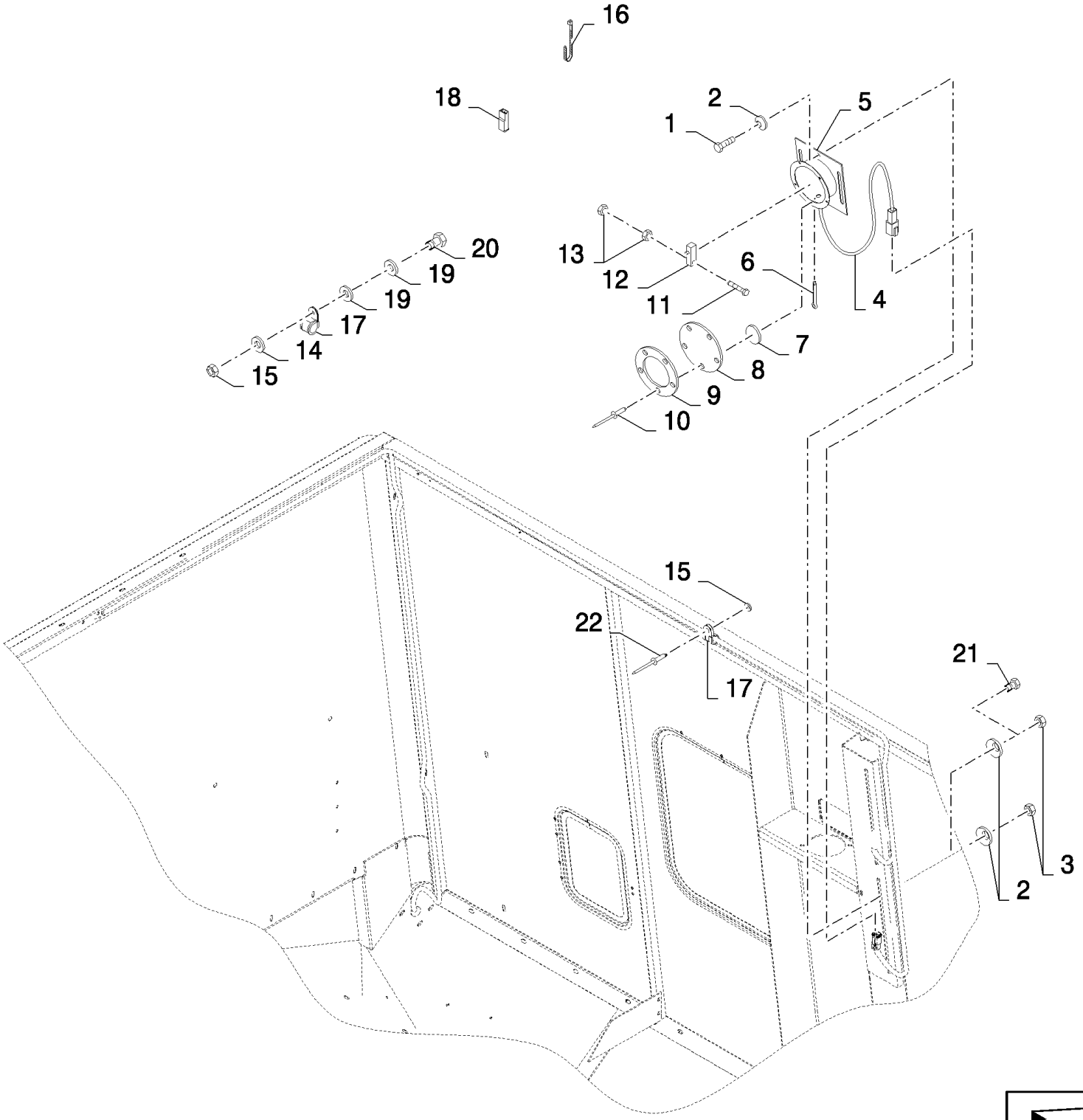

CSX7080 C659 - COMBINE (9/06-8/08)

18.84085921(01) SECOND GRAIN TANK LEVEL SENSOR

ссылка	Номер детали	Кол-во	Описание
	84085921		DIA KIT, HARVESTER,
1	120104	2	SCREW, Hex, M8 x 20, 8.8,
2	322358	4	WASHER, SPRING, Belleville, M8,
3	9706690	2	NUT, M8, Cl 8,
4	84449919	1	HARNESS, WIRE,
5	450336	1	CASE,
6	9512667	1	PIN, SPLIT (COTTER), M2 x 20,
7	250244	1	WASHER,
8	435233	1	CANVAS,
9	457556	1	RING,
10	425520	5	RIVET, RIVET
11	301571	2	SCREW, M3x25
12	399159	1	SWITCH,
13	86508812	4	NUT, M3, Cl 8,
14	322356	1	WASHER, 5MM
15	15896221	1	NUT, M6, Cl 10,
16	89993154	2	CLAMP,
17	9507809	1	CLAMP,
18	441159	2	CONNECTOR, WIRE,
19	140040	2	WASHER, M6 x 22 x 2,
20	120100	1	BOLT, Hex, M6 x 20, 8.8,
21	16043224	2	BOLT, Hex, M8 x 16, 8.8, Full Thd,
22	9512290	1	RIVET,
	80400975	0.002	GLUE

CSX7080 C659 - COMBINE (9/06-8/08)

18.84085937(01) CORN THRESHING REBUILD KIT - FROM RICE VERSION

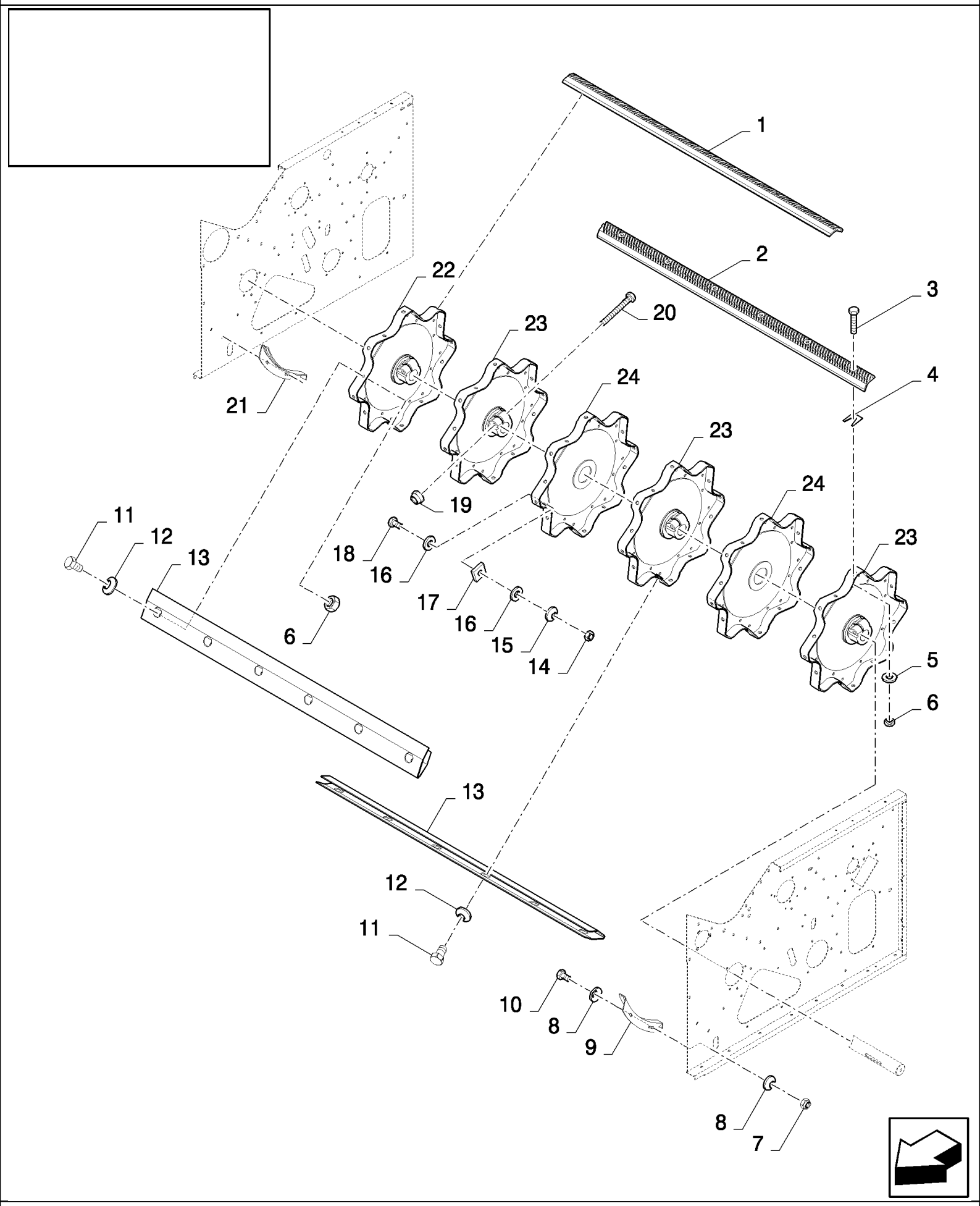

CSX7080 C659 - COMBINE (9/06-8/08)

18.84085937(01) CORN THRESHING REBUILD KIT - FROM RICE VERSION

ссылка	Номер детали	Кол-во	Описание
	84085937		DIA KIT, HARVESTER,
1	84438637	2	RASP BAR SET, LH
2	84438638	2	RASP BAR SET, RH
3	385376	48	SCREW, M12x30
4	80481491	24	PLATE, ADJUSTING,
5	394630	48	WASHER,
6	9706685	74	NUT, M12, Cl 8,
7	353308	4	NUT, M6 x 1, Cl 8,
8	322357	8	WASHER, SPRING, Belleville, M6,
9	333222	1	ANGLE BAR,
10	120100	4	BOLT, Hex, M6 x 20, 8.8,
11	300388	48	SCREW, Hex, M12 x 25, 8.8,
12	140046	48	WASHER, Belleville, M12,
13	84440498	8	COVER,
14	9706690	6	NUT, M8, Cl 8,
15	322358	6	WASHER, SPRING, Belleville, M8,
16	140041	12	WASHER, M8 x 28 x 3,
17	351518	6	PLATE, ADJUSTING,
18	43128	6	BOLT, Hex, M8 x 30, 8.8,
19	86000441	4	NUT, M16 x 2, Cl 8,
20	350616	4	SCREW, Hex, M16 x 90, 8.8,
21	335307	1	ANGLE BAR,
22	84440736	1	DISC,
23	84440731	3	DISC,
24	394487	2	DISC,
	86503661	0.04	GREASE, GREASE

CSX7080 C659 - COMBINE (9/06-8/08)

18.84085937(02) CORN THRESHING REBUILD KIT - FROM RICE VERSION

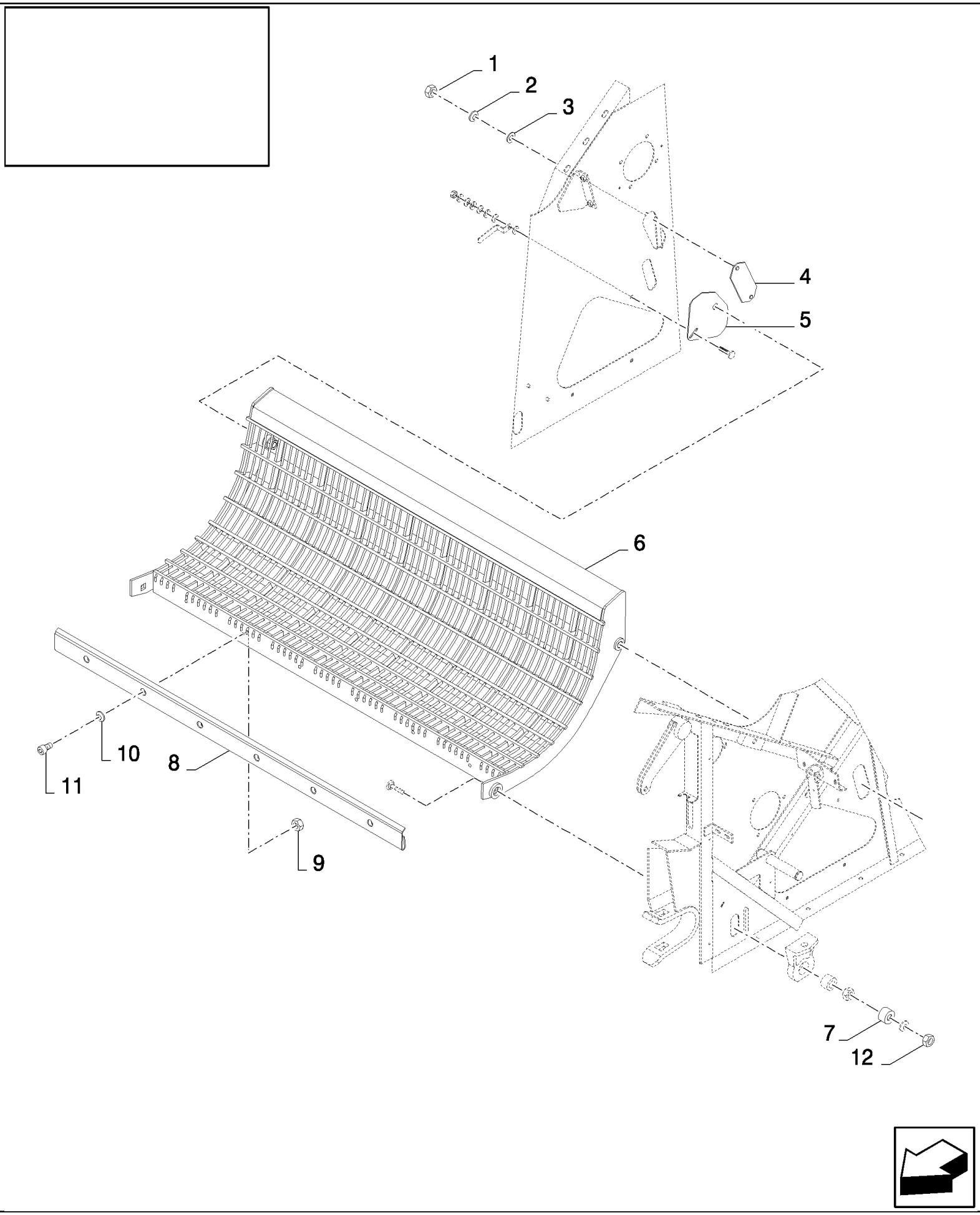

CSX7080 C659 - COMBINE (9/06-8/08)

18.84085937(02) CORN THRESHING REBUILD KIT - FROM RICE VERSION

ссылка	Номер детали	Кол-во	Описание
	84085937		DIA KIT, HARVESTER,
1	9706755	2	NUT, M6, Cl 8,
2	322357	2	WASHER, SPRING, Belleville, M6,
3	140040	2	WASHER, M6 x 22 x 2,
4	84443834	1	PLATE, COVER,
5	84443839	1	PLATE, COVER,
6	84076873	1	CONCAVE,
7	84007394	2	BUSHING,
8	84072086	1	SHEET, FRONT,
9	100016	6	NUT, M10, Cl 8,
10	140045	6	WASHER, SPRING, Belleville, M10,
11	120052	6	SCREW, Hex Soc Hd, M10 x 25, 8.8,
12	380424	2	NUT, LOCK, M20 x 2.5, Cl 8,

CSX7080 C659 - COMBINE (9/06-8/08)

18.84085956(01) ADDITIONAL MIRRORS

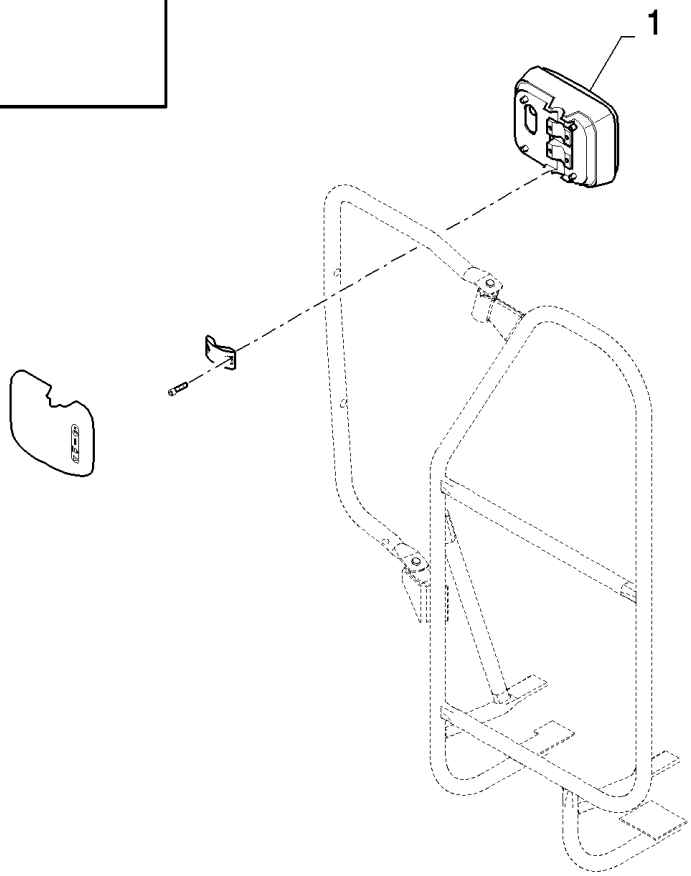

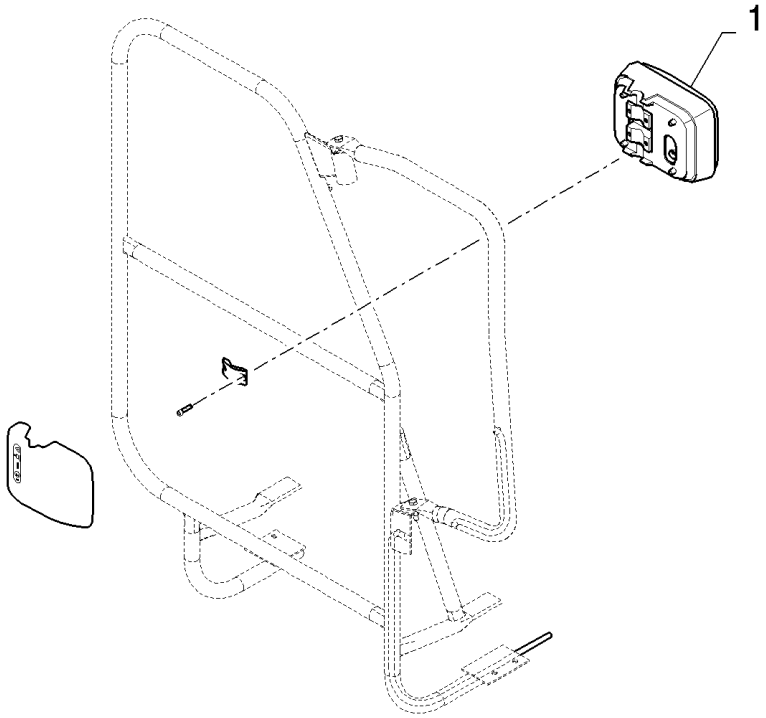

CSX7080 C659 - COMBINE (9/06-8/08)

18.84085956(01) ADDITIONAL MIRRORS

ссылка	Номер детали	Кол-во	Описание
	84085956		DIA KIT, HARVESTER,
1	84814470	2	MIRROR, REAR-VIEW,

18.84085968(01) SEAT BELT - OPERATOR'S SEAT

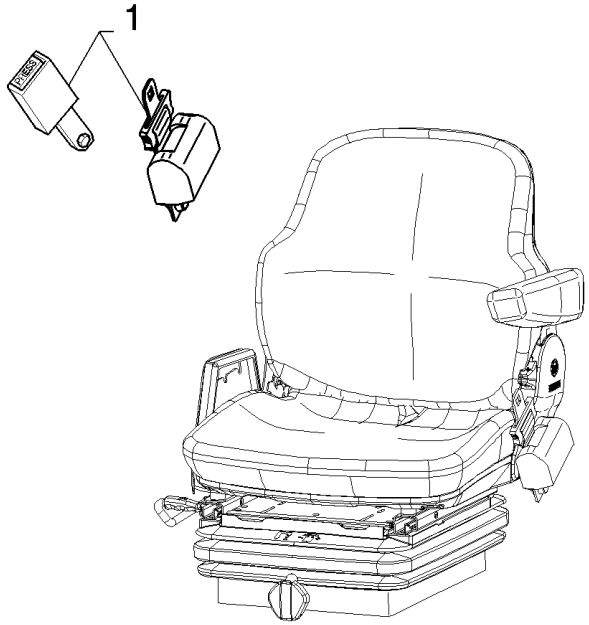

CSX7080 C659 - COMBINE (9/06-8/08)

18.84085968(01) SEAT BELT - OPERATOR'S SEAT

ссылка	Номер детали	Кол-во	Описание
	84085968		DIA KIT, HARVESTER,
1	84429853	1	SEAT BELT,

18.84095829(01) DAWNING SLATS - MODERATE CONCAVE

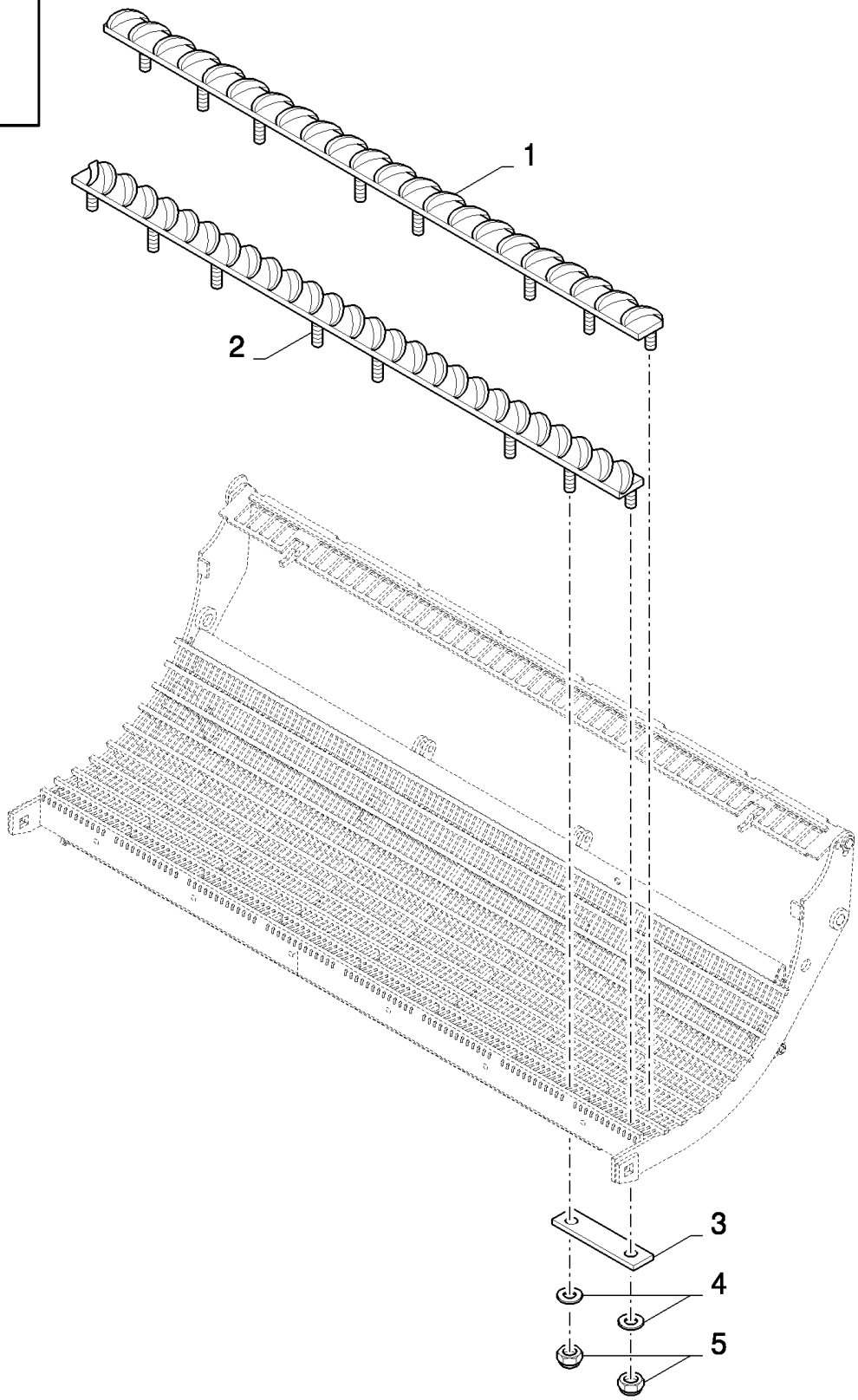

CSX7080 C659 - COMBINE (9/06-8/08)

18.84095829(01) DAWNING SLATS - MODERATE CONCAVE

ссылка	Номер детали	Кол-во	Описание
	84095829		DEAWNING SLATS,
1	84814227	1	DE AWNER,
2	84814223	1	DE AWNER,
3	9832998	6	PLATE, FIXING,
4	140041	16	WASHER, M8 x 28 x 3,
5	412250	16	NUT, LOCK, M8 x 1.25, Cl 8,

CSX7080 C659 - COMBINE (9/06-8/08)

18.84101008(01) POWERED REAR AXLE REBUILD KIT - FOR ADJUSTABLE AXLES

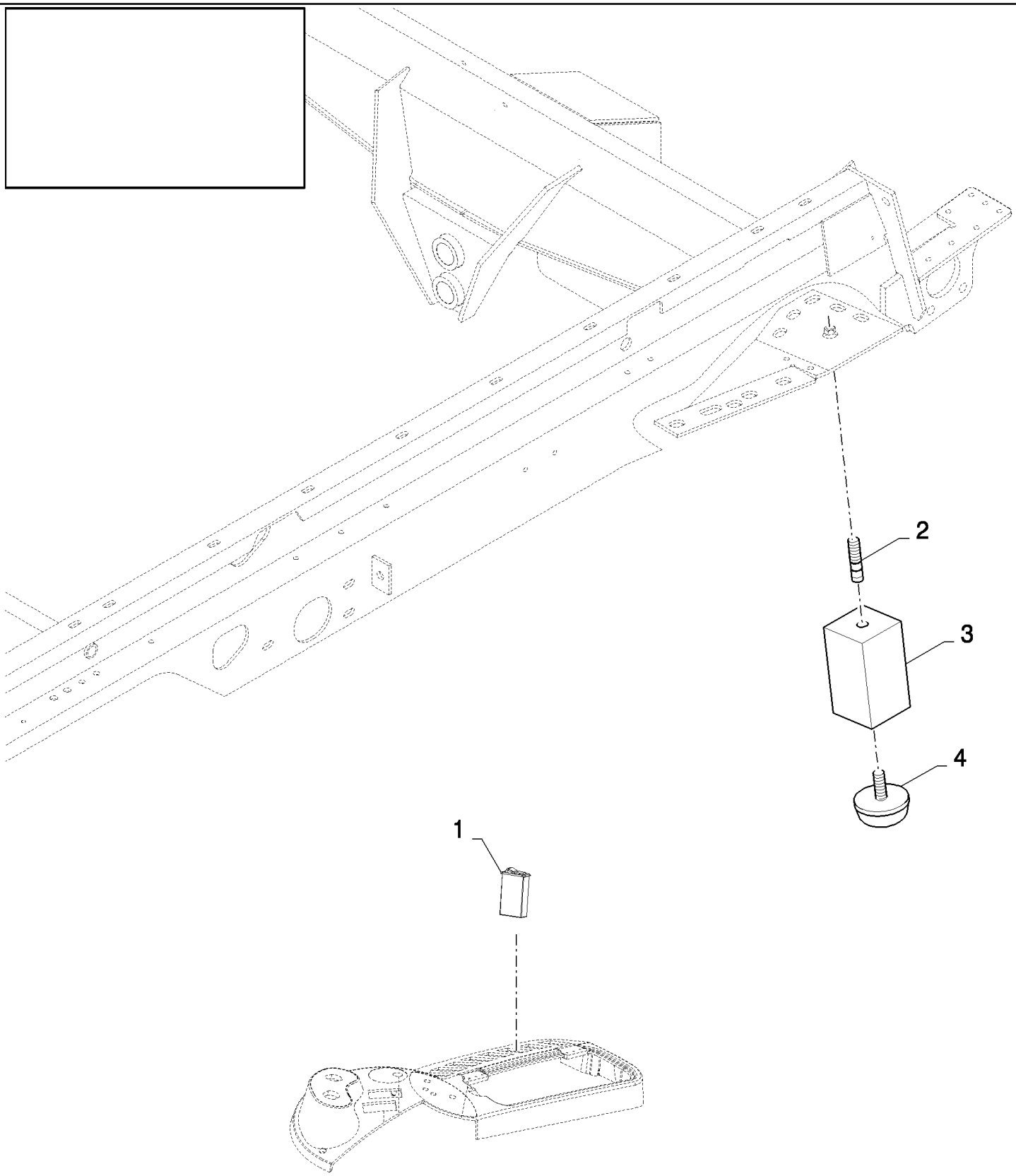

CSX7080 C659 - COMBINE (9/06-8/08)

18.84101008(01) POWERED REAR AXLE REBUILD KIT - FOR ADJUSTABLE AXLES

ссылка	Номер детали	Кол-во	Описание
	84101008		DIA KIT, HARVESTER,
1	84806859	1	SWITCH,
2	412593	2	BOLT,
3	417299	2	STOP,
4	190029	2	INSULATOR BLOCK,

18.84101008(02) POWERED REAR AXLE REBUILD KIT - FOR ADJUSTABLE AXLES

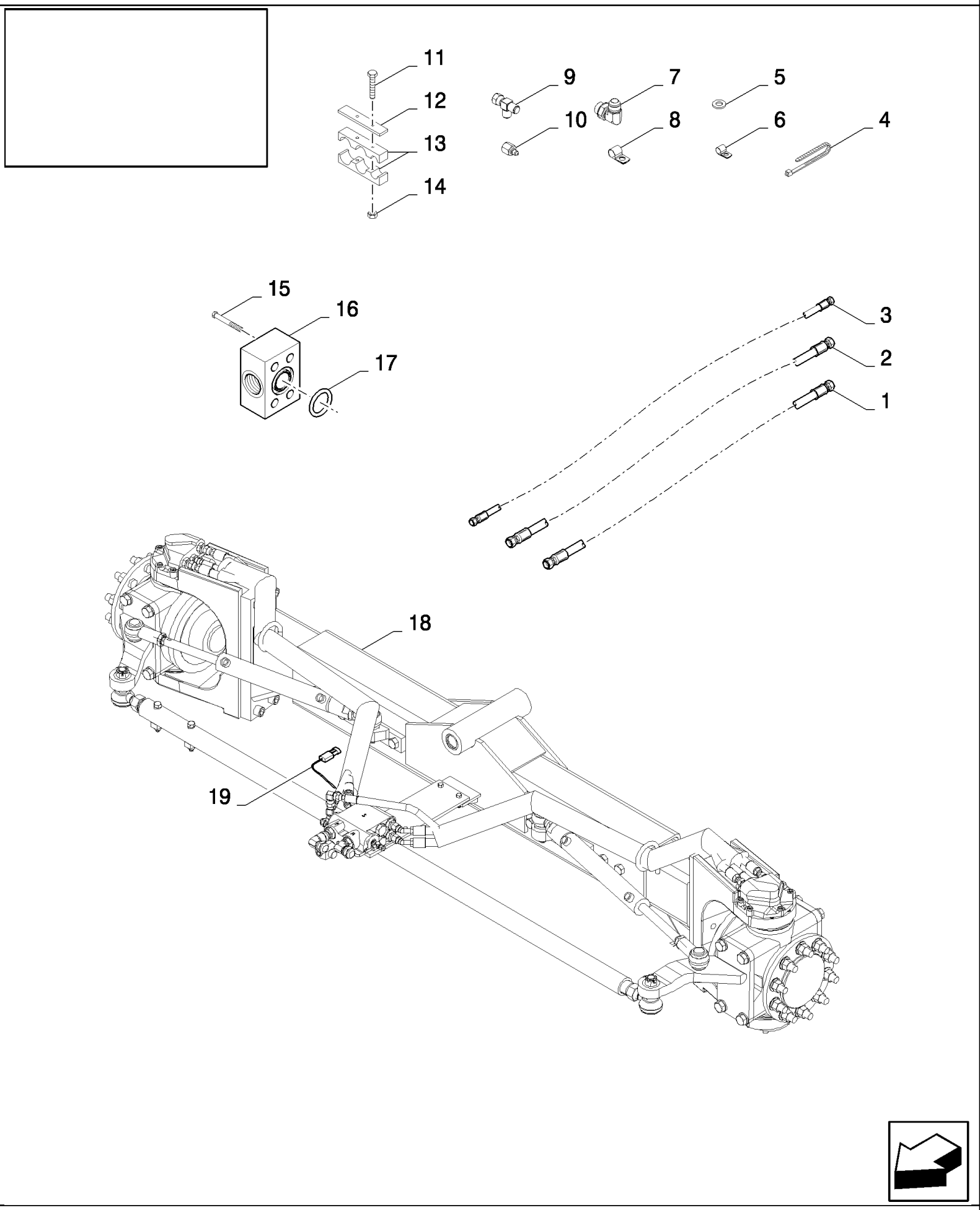

CSX7080 C659 - COMBINE (9/06-8/08)

18.84101008(02) POWERED REAR AXLE REBUILD KIT - FOR ADJUSTABLE AXLES

ссылка	Номер детали	Кол-во	Описание
	84101008		DIA KIT, HARVESTER,
1	84441308	1	HOSE, FLEXIBLE, L=123"
2	84807872	1	HOSE, FLEXIBLE, L=137"
3	84056198	1	HOSE, HYDRAULIC, L=150"
4	NS	28	NOT SERVICED,
5	87361	3	WASHER, 1/4", SAE,
6	84818444	2	CLAMP,
7	322894	2	ELBOW, 90є, 1 1/16"-12, 37є x 1 1/16"-12, O-Ring,
8	455556	1	CLAMP,
9	9507672	1	CONNECTION, 3 WAY,
10	9512230	1	REDUCER,
11	84807864	4	SCREW, M6x60
12	455534	2	SUPPORT,
13	455533	4	CLAMP,
14	412152	4	NUT, LOCK, M6 x 1, Cl 8.8,
15	9818286	4	BOLT, Hex, 1/2"-13 x 3 1/2", G8,
16	9818288	1	ADAPTER,
17	14464080	1	O-RING, -222, 70 Duro, 1.484" ID x .139" Thk,
18	84085992	1	
19	84446931	1	HARNESS, WIRE,

18.84101008(03) POWERED REAR AXLE REBUILD KIT - FOR ADJUSTABLE AXLES

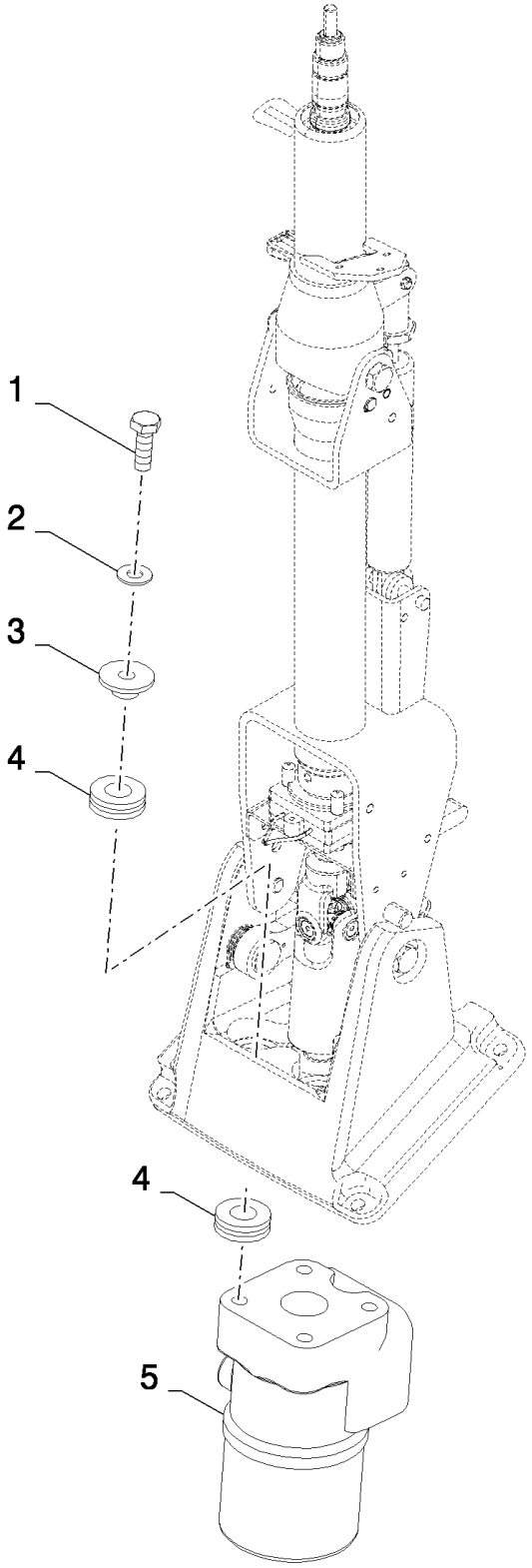

CSX7080 C659 - COMBINE (9/06-8/08)

18.84101008(03) POWERED REAR AXLE REBUILD KIT - FOR ADJUSTABLE AXLES

ссылка	Номер детали	Кол-во	Описание
	84101008		DIA KIT, HARVESTER,
1	9706704	4	BOLT, Hex, M10 x 35, 8.8, Full Thd,
2	140045	4	WASHER, SPRING, Belleville, M10,
3	84819581	4	FLANGE,
4	84819582	8	DAMPER,
5	84458935	1	VALVE, HYDRAULIC,

18.84101010(01) INTERMEDIATE ROLL

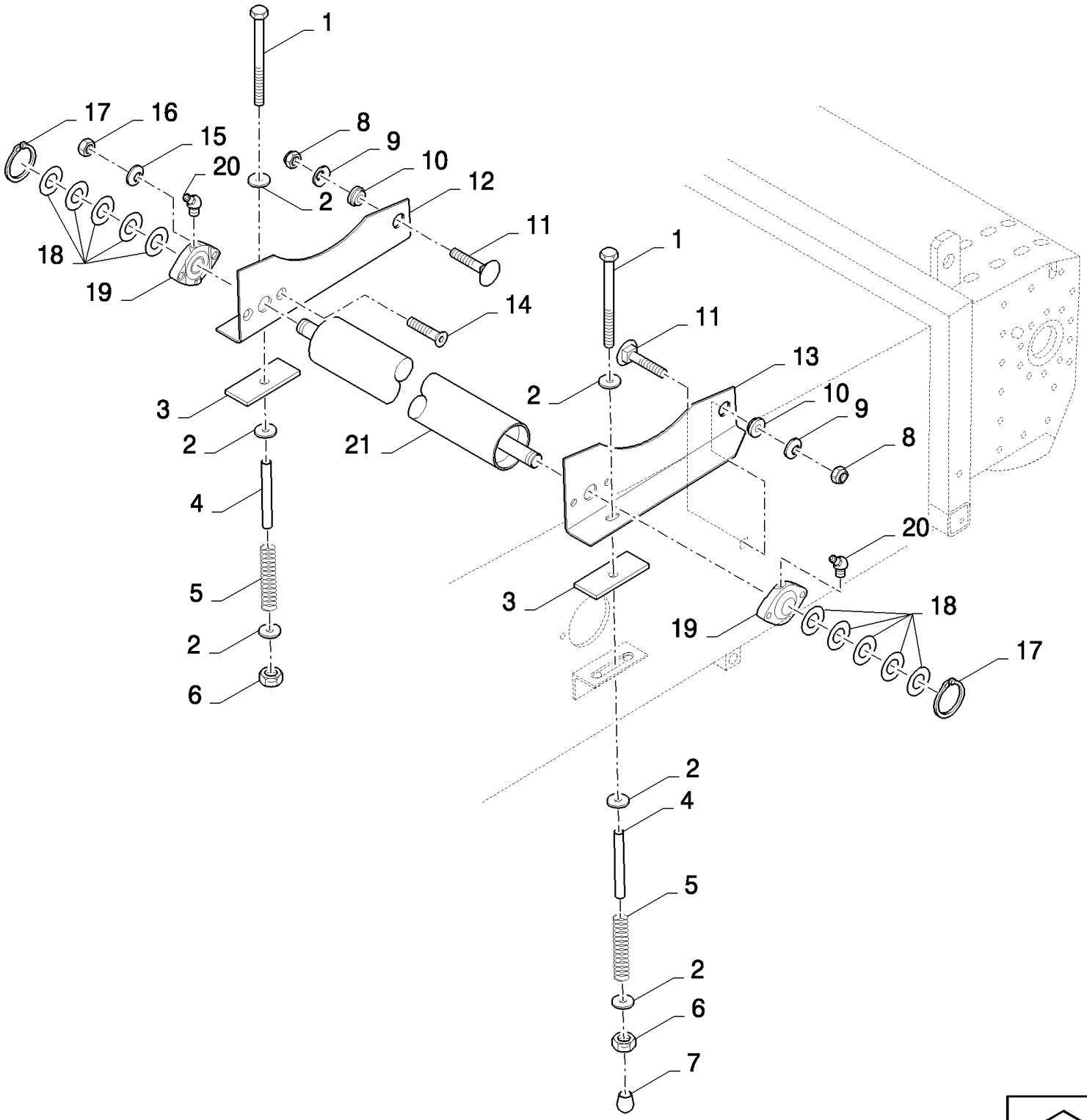

CSX7080 C659 - COMBINE (9/06-8/08)

18.84101010(01) INTERMEDIATE ROLL

ссылка	Номер детали	Кол-во	Описание
	84101010		DIA KIT, HARVESTER,
1	412579	2	BOLT, Hex, M10 x 230, 8.8, M10x230
2	9832748	6	WASHER, 11MM
3	9500474	2	PAD, RUBBER,
4	84334391	2	TUBE,
5	354085	2	SPRING,
6	412141	2	NUT, LOCK, M10 x 1.5, Cl 8,
7	84005018	1	PLUG,
8	100038	2	NUT, M12 x 1.75, Cl 8,
9	140046	2	WASHER, Belleville, M12,
10	9500475	2	BUSHING,
11	120044	2	BOLT, CARRIAGE, Short NK, M12 x 30, Cl8.8, Full Thd,
12	84039236	1	SUPPORT, RH
13	84039235	1	SUPPORT, LH
14	412466	4	SCREW, Hex Soc Flat Hd, M10 x 35, 8.8, M10x40
15	140045	4	WASHER, SPRING, Belleville, M10,
16	100016	4	NUT, M10, Cl 8,
17	370002	2	RING, SNAP, M25, Ext,
18	140229	10	WASHER, 26MM
19	9514667	2	BEARING ASSY,
20	84814929	2	NIPPLE, LUBE,
21	84071544	1	ROLLER, CONVEYOR,
	84334829	2	DECAL,
	86503661	0.01	GREASE, GREASE
	80400972	0.01	GREASE
	89504635	0.01	LOCTITE

CSX7080 C659 - COMBINE (9/06-8/08)

18.84101109(01) STRAWCHOPPER REBUILD KIT - REMOTE ADJUSTABLE DEFLECTORS

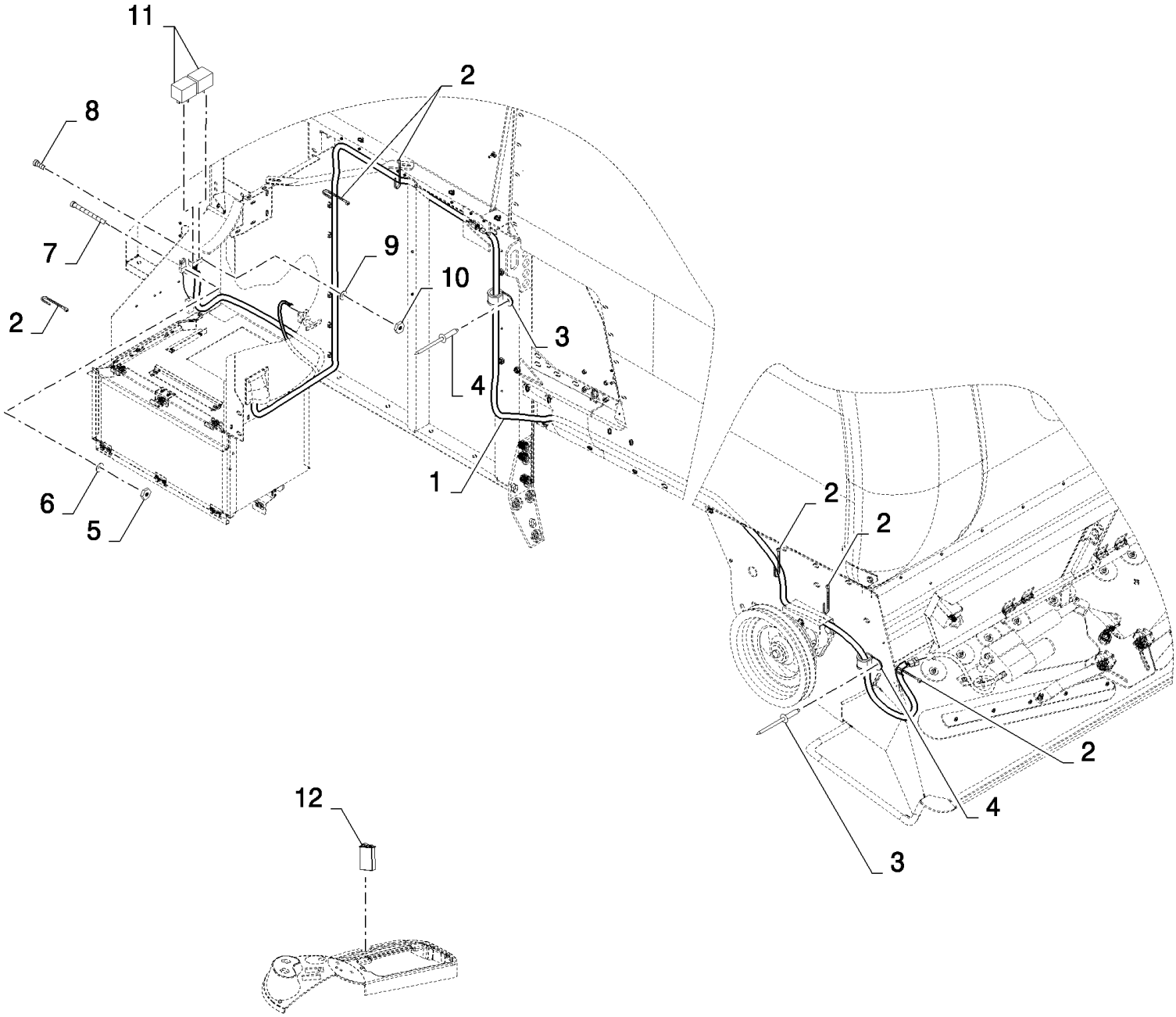

CSX7080 C659 - COMBINE (9/06-8/08)

18.84101109(01) STRAWCHOPPER REBUILD KIT - REMOTE ADJUSTABLE DEFLECTORS

ссылка	Номер детали	Кол-во	Описание
	84101109		DIA KIT, HARVESTER,
1	84441436	1	HARNESS, WIRE,
2	89993154	14	CLAMP,
3	9512290	6	RIVET, RIVET
4	84818442	6	CLAMP,
5	86508812	2	NUT, M3, Cl 8,
6	412548	2	WASHER, 3MM
7	86511816	2	SCREW, Cross Pan Hd, M3 x 16,
8	44334	2	SCREW, Cross Pan Hd, M4 x 12,
9	322355	2	WASHER, Belleville, M4,
10	100012	2	NUT, M4, Cl 8,
11	84000651	2	RELAY,
12	84320655	1	SWITCH,

CSX7080 C659 - COMBINE (9/06-8/08)

18.84101109(02) STRAWCHOPPER REBUILD KIT - REMOTE ADJUSTABLE DEFLECTORS

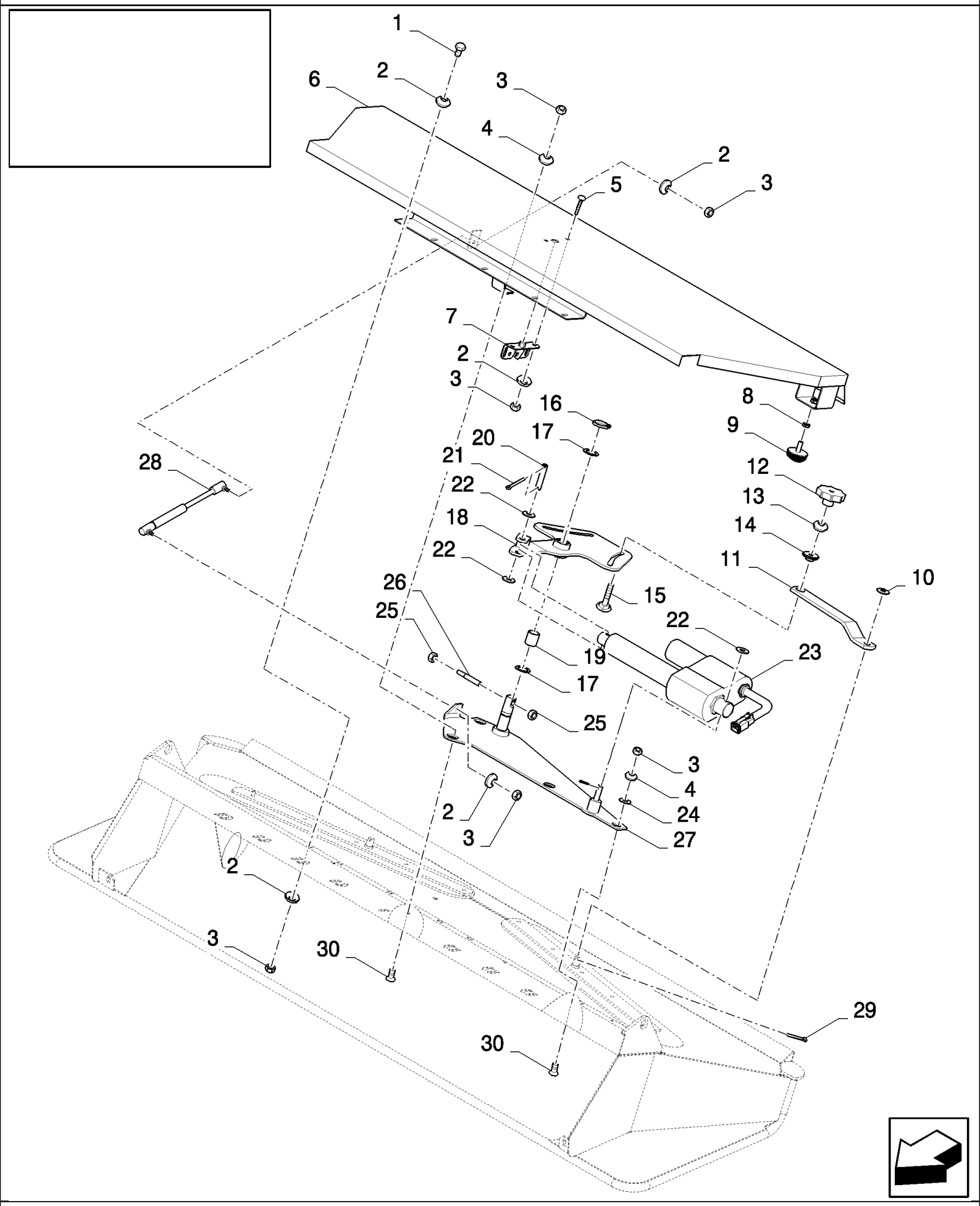

CSX7080 C659 - COMBINE (9/06-8/08)

18.84101109(02) STRAWCHOPPER REBUILD KIT - REMOTE ADJUSTABLE DEFLECTORS

ссылка	Номер детали	Кол-во	Описание
	84101109		DIA KIT, HARVESTER,
1	120104	5	SCREW, Hex, M8 x 20, 8.8,
2	322358	14	WASHER, SPRING, Belleville, M8,
3	9706690	12	NUT, M8, Cl 8,
4	412650	3	WASHER, Belleville, M8,
5	86507486	2	BOLT, CARRIAGE, Short NK, M8 x 20, Cl8.8, Full Thd,
6	84435678	1	COVER,
7	84015292	1	LOCK,
8	84807411	2	NUT, Thin, M10 x 1.5, Cl 04,
9	190029	2	INSULATOR BLOCK,
10	378246	2	WASHER, 16MM
11	84435480	2	LINKAGE,
12	84440562	2	KNOB,
13	140045	2	WASHER, SPRING, Belleville, M10,
14	84435513	2	BUSHING,
15	350459	2	SCREW, Short NK, M10 x 50, Cl8.8, Full Thd,
16	370002	1	RING, SNAP, M25, Ext,
17	140103	2	WASHER, 26MM
18	84435495	1	LEVER,
19	80395589	1	SLEEVE,
20	84017216	1	PIN,
21	130003	3	PIN, SPLIT (COTTER), M3.2 x 20,
22	378245	3	WASHER, M12,
23	84018921	1	ACTUATOR,
24	554195	2	WASHER, 9MM
25	100016	2	NUT, M10, Cl 8,
26	84018597	1	ROD, THREADED,
27	84435645	1	SUPPORT,
28	89994348	1	GAS STRUT,
29	130004	2	PIN, SPLIT (COTTER), M3.2 x 25,
30	412495	3	SCREW, Hex Soc Flat Hd, M8 x 20, 8.8, M8x20
	84004739	2	DECAL,
	86503661	0.01	GREASE,

CSX7080 C659 - COMBINE (9/06-8/08)

18.84101116(01) SIGNAL PLATES

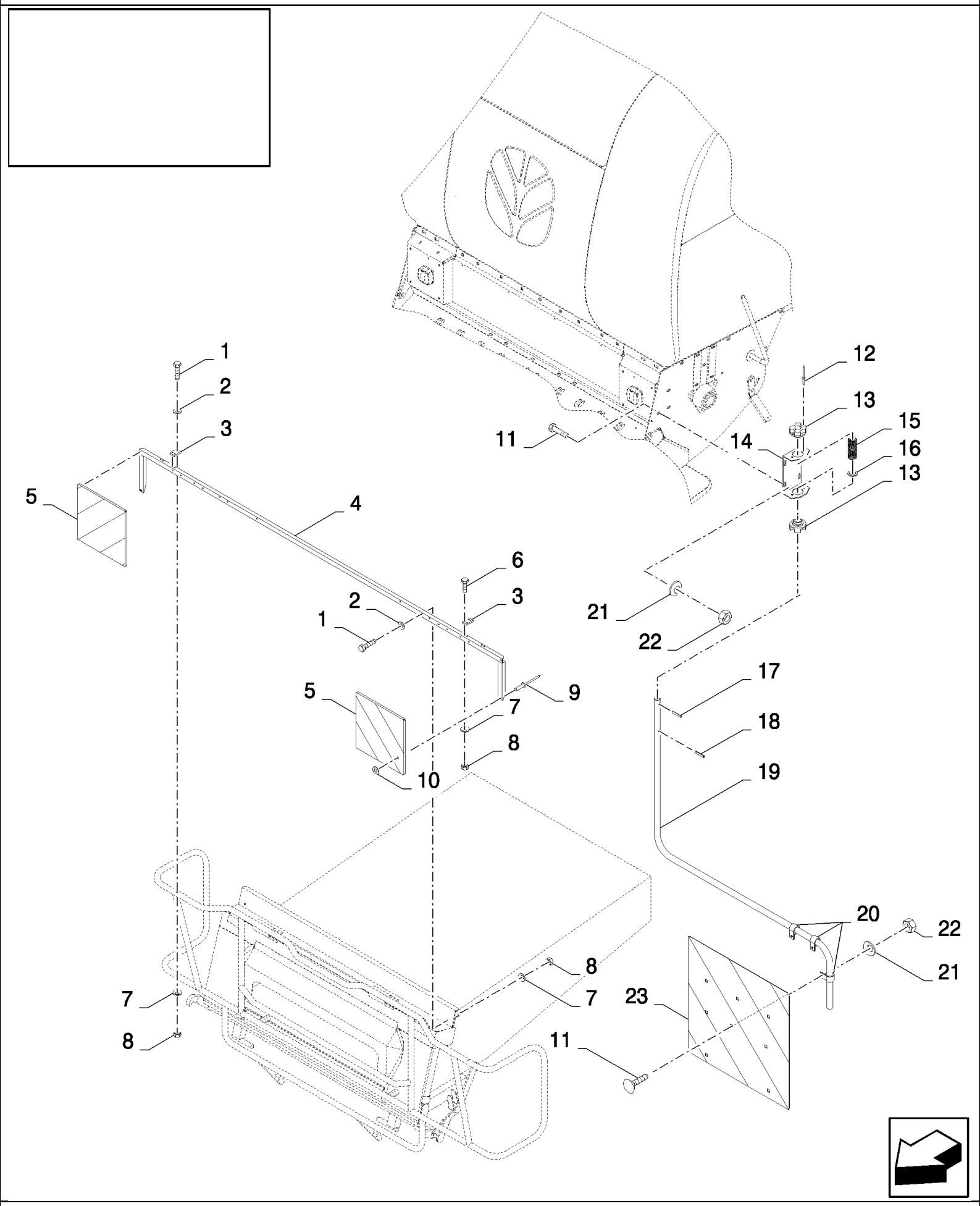

CSX7080 C659 - COMBINE (9/06-8/08)

18.84101116(01) SIGNAL PLATES

ссылка	Номер детали	Кол-во	Описание
	84101116		DIA KIT, HARVESTER,
1	43118	2	BOLT, Hex, M6 x 40, 8.8,
2	86588450	2	WASHER, M6,
3	84818296	2	SUPPORT,
4	9502877	1	SUPPORT,
5	84607381	2	PLATE,
6	86508568	4	SCREW, Hex, M6 x 16, 8.8,
7	322357	6	WASHER, SPRING, Belleville, M6,
8	15896221	6	NUT, M6, Cl 10,
9	425523	6	RIVET, RIVET
10	89824840	6	WASHER, 4MM
11	120104	14	SCREW, Hex, M8 x 20, 8.8,
12	455959	8	RIVET,
13	921928	4	BUSHING,
14	9814947	2	SUPPORT,
15	435967	2	SPRING,
16	378248	2	WASHER, 24MM
17	84022829	2	PIN,
18	9503523	2	PIN,
19	84447687	1	ARM, SUPPORTING, RH
19	84447654	1	ARM, SUPPORTING, LH
20	418407	6	CLAMP,
21	322358	14	WASHER, SPRING, Belleville, M8,
22	9706690	14	NUT, M8, Cl 8,

18.84101146(01) SIGNAL PLATES SUPPORT - ITALY

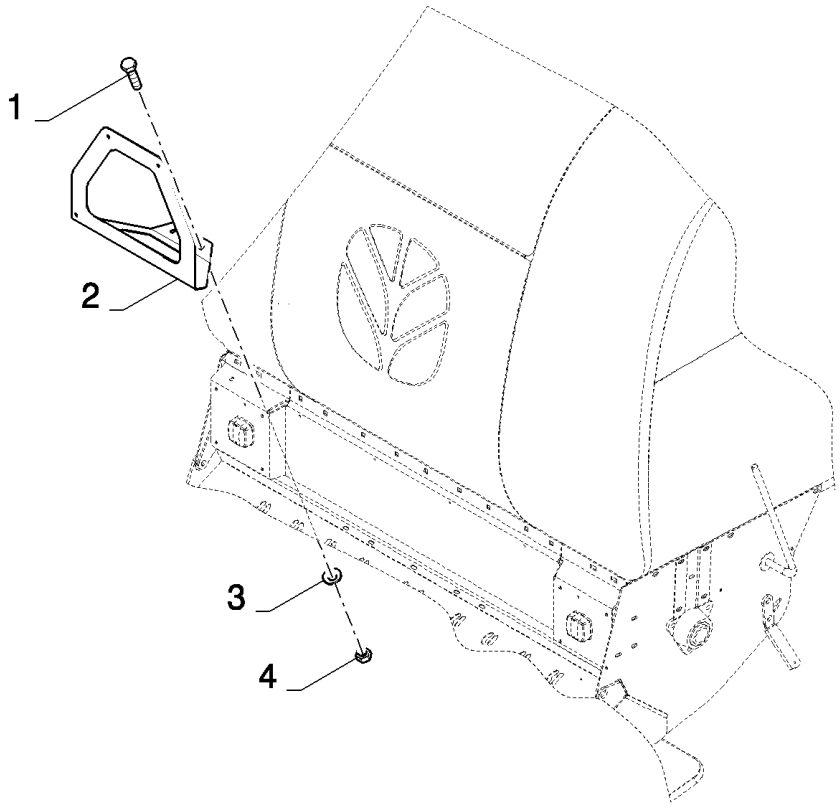

CSX7080 C659 - COMBINE (9/06-8/08)

18.84101146(01) SIGNAL PLATES SUPPORT - ITALY

ссылка	Номер детали	Кол-во	Описание
	84101146		DIA KIT, HARVESTER,
1	120104	2	SCREW, Hex, M8 x 20, 8.8,
2	84447708	1	SUPPORT,
3	322358	2	WASHER, SPRING, Belleville, M8,
4	9706690	2	NUT, M8, Cl 8,

18.84110338(01) RAIL - STEERING PLATFORM - WITHOUT PLATFORM EXTENSION

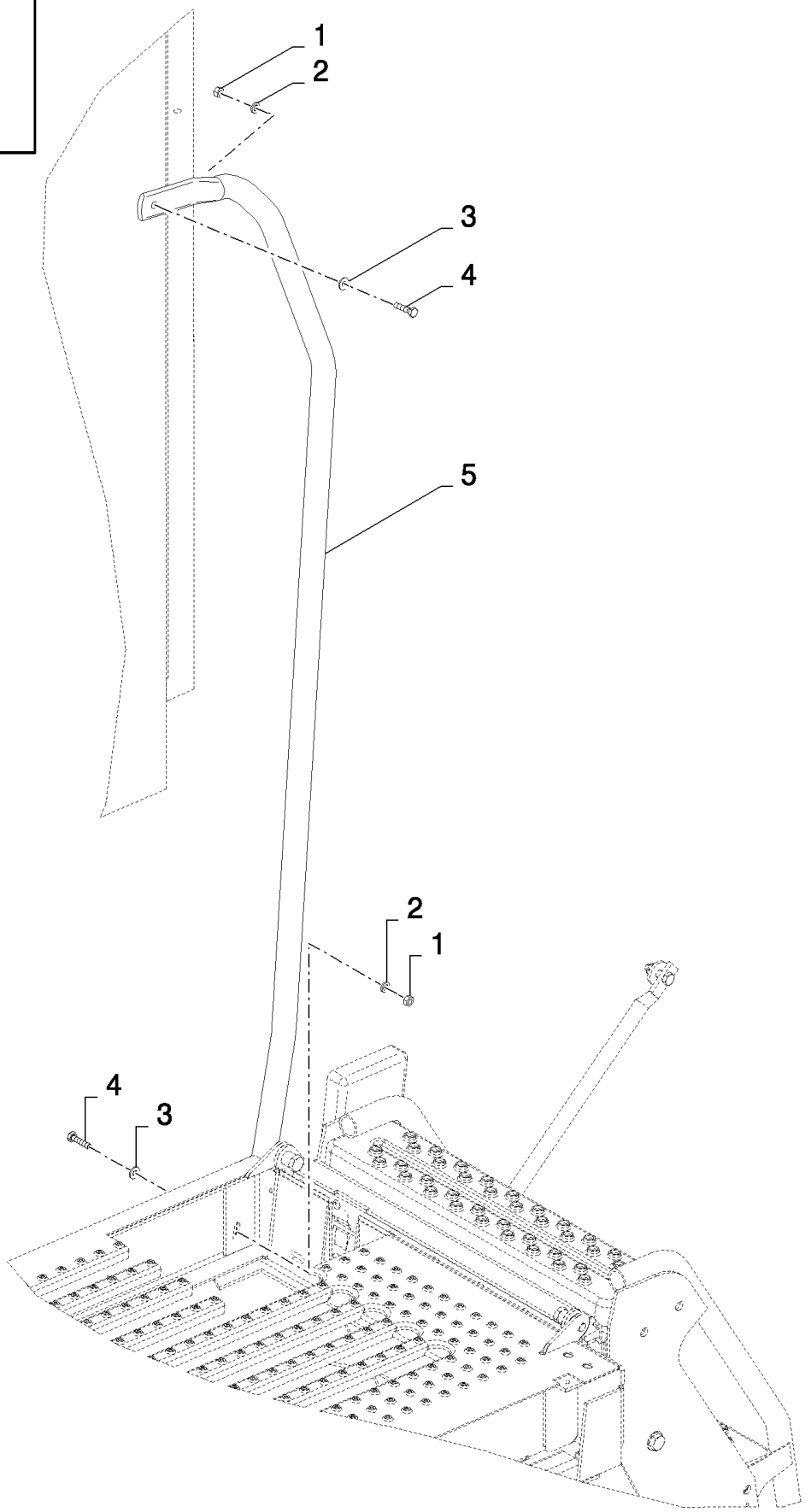

CSX7080 C659 - COMBINE (9/06-8/08)

18.84110338(01) RAIL - STEERING PLATFORM - WITHOUT PLATFORM EXTENSION

ссылка	Номер детали	Кол-во	Описание
	84110338		DIA KIT, HARVESTER,
1	9706755	2	NUT, M6, Cl 8,
2	86588499	2	WASHER, M6 x 12 x 1.6, 6MM
3	322357	2	WASHER, SPRING, Belleville, M6,
4	86977786	2	BOLT, Hex, M6 x 25, 8.8,
5	84444204	1	TUBE,

18.84110700(01) MISCELLANEOUS - GERMAN SPECIFICATION

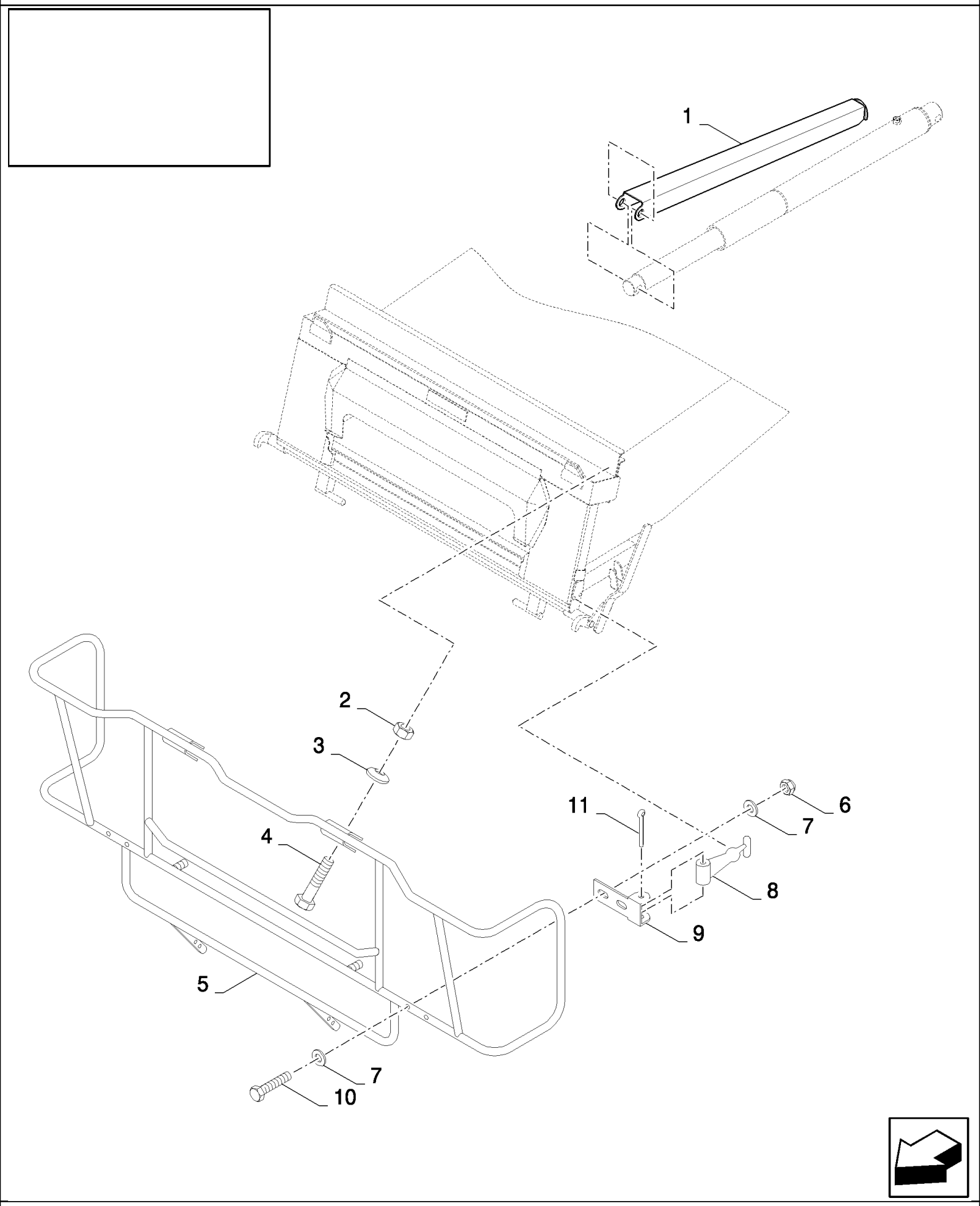

CSX7080 C659 - COMBINE (9/06-8/08)

18.84110700(01) MISCELLANEOUS - GERMAN SPECIFICATION

ссылка	Номер детали	Кол-во	Описание
	84110700		DIA KIT, HARVESTER,
1	84449367	1	SUPPORT,
2	9706690	2	NUT, M8, Cl 8,
3	322358	2	WASHER, SPRING, Belleville, M8,
4	120061	2	BOLT, Hex, M8 x 60, 8.8,
5	419643	1	SHIELD,
6	353308	4	NUT, M6 x 1, Cl 8,
7	86588450	8	WASHER, M6,
8	353067	2	HANDLE,
9	350918	2	BRACKET,
10	120102	4	SCREW, Hex, M6 x 40, 8.8, Full Thd,
11	300416	2	PIN, SPLIT (COTTER), M4 x 50,

18.84112166(01) AIR GUN & HOSE

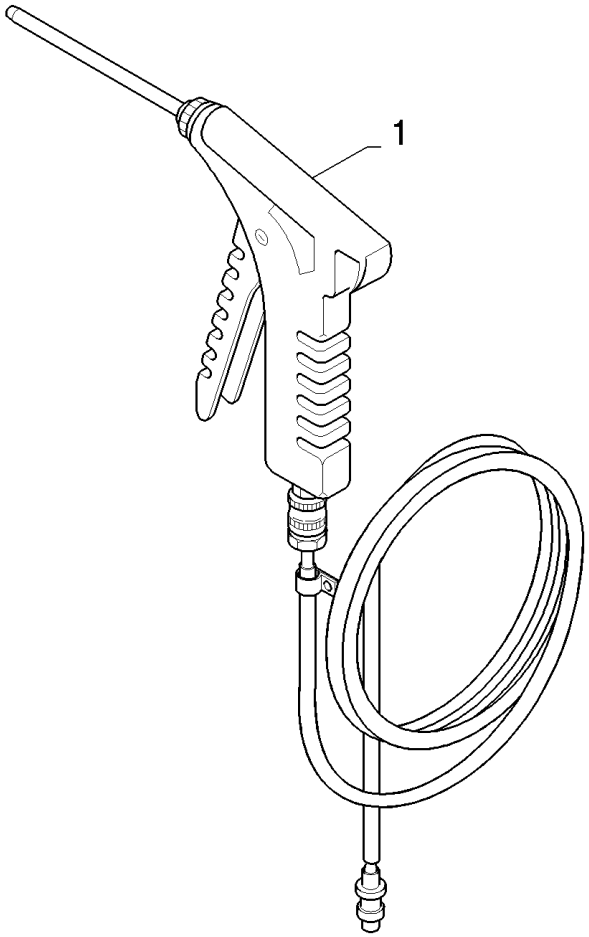

CSX7080 C659 - COMBINE (9/06-8/08)

18.84112166(01) AIR GUN & HOSE

ссылка	Номер детали	Кол-во	Описание
	84112166		DIA KIT, HARVESTER,
1	84045084	1	HOSE, FLEXIBLE,

18.87333691(01) BEATER PINS

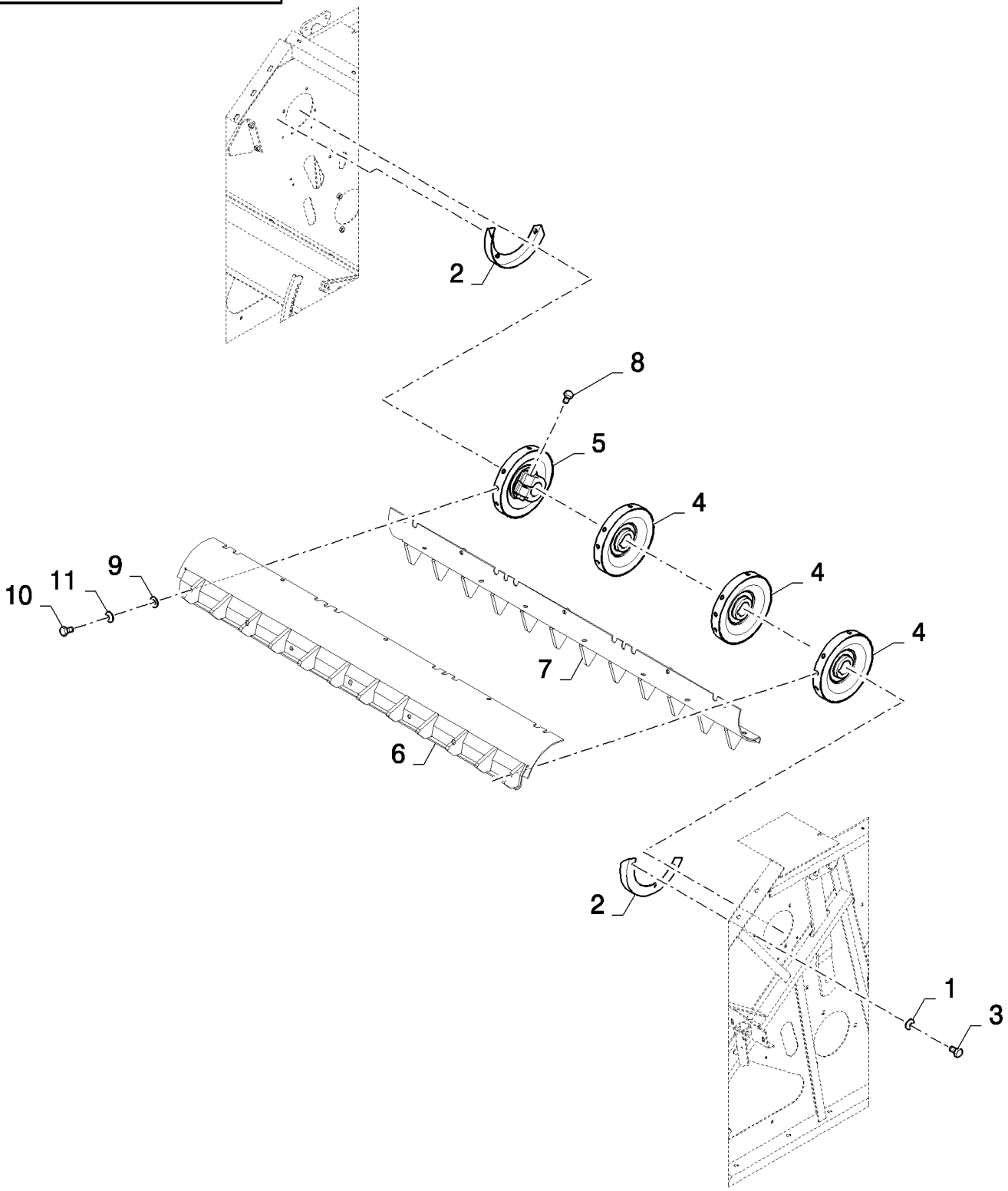

CSX7080 C659 - COMBINE (9/06-8/08)

18.87333691(01) BEATER PINS

ссылка	Номер детали	Кол-во	Описание
	87333691	1	DIA KIT, HARVESTER,
1	322357	6	WASHER, SPRING, Belleville, M6,
2	84435912	2	HALF-RING,
3	120100	6	BOLT, Hex, M6 x 20, 8.8,
4	84435802	3	DISC,
5	84435818	1	DISC,
6	84462627	2	LATH,
7	84462626	2	LATH,
8	350616	4	SCREW, Hex, M16 x 90, 8.8,
9	543043	28	WASHER,
10	9706687	28	SCREW, Hex, M12 x 30, 8.8,
11	140046	28	WASHER, Belleville, M12,
	84441900	0.01	Loctite

18.87335607(01) FRONT BEACON PROTECTION

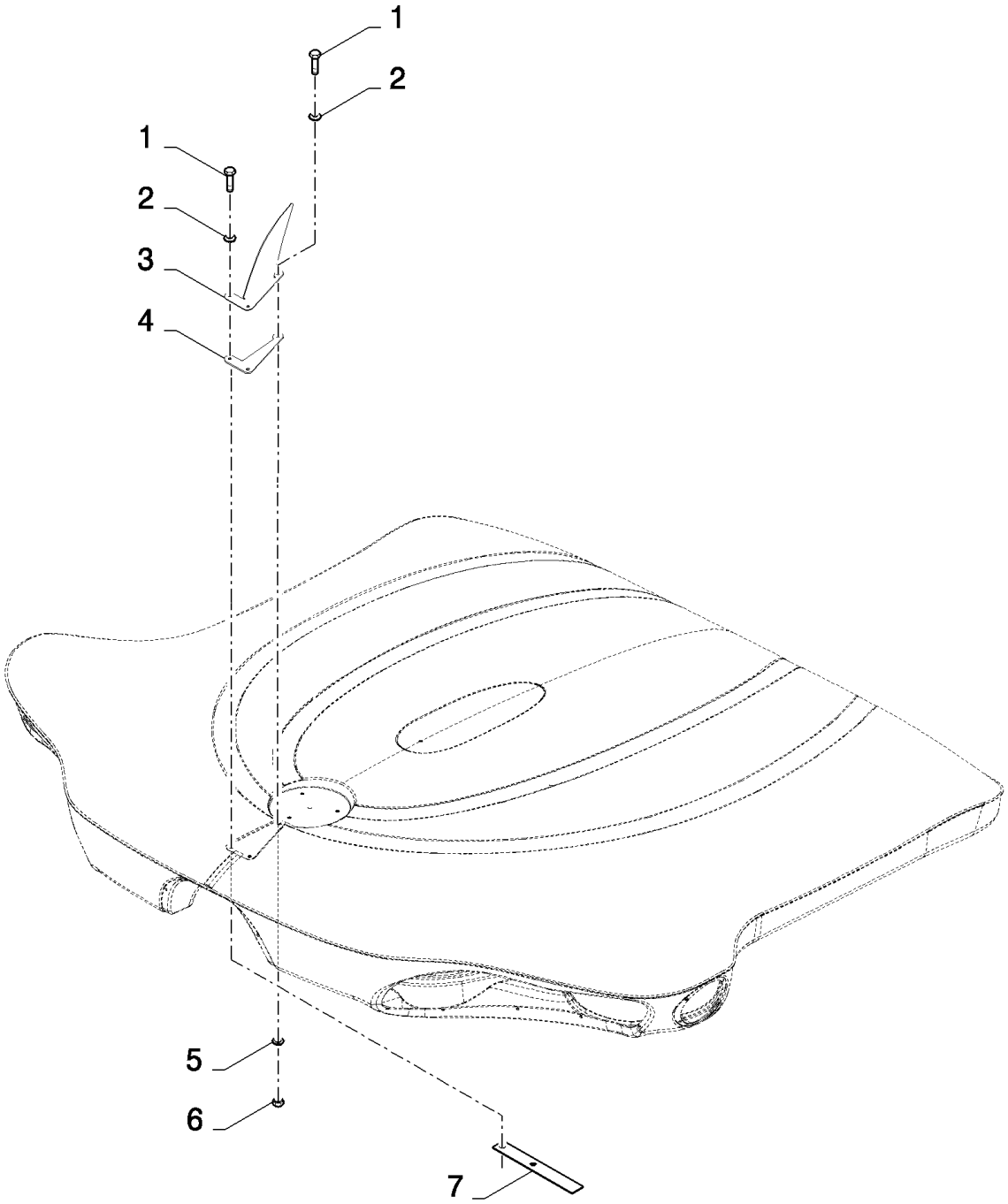

CSX7080 C659 - COMBINE (9/06-8/08)

18.87335607(01) FRONT BEACON PROTECTION

ссылка	Номер детали	Кол-во	Описание
	87335607		DIA KIT, HARVESTER,
1	43117	3	BOLT, Hex, M6 x 30, 8.8,
2	9824259	3	WASHER, M6 x 12 x 1.6,
3	84801125	1	PLATE,
4	84443967	1	SEAL,
5	84007539	1	WASHER, 6MM
6	9706755	1	NUT, M6, Cl 8,
7	84807642	1	PLATE, FIXING,

CSX7080 C659 - COMBINE (9/06-8/08)

18.87336943(01) REBUILD KIT - WHEAT TO RICE - 56MM TEETH - WITH ROTARY SEPARATOR

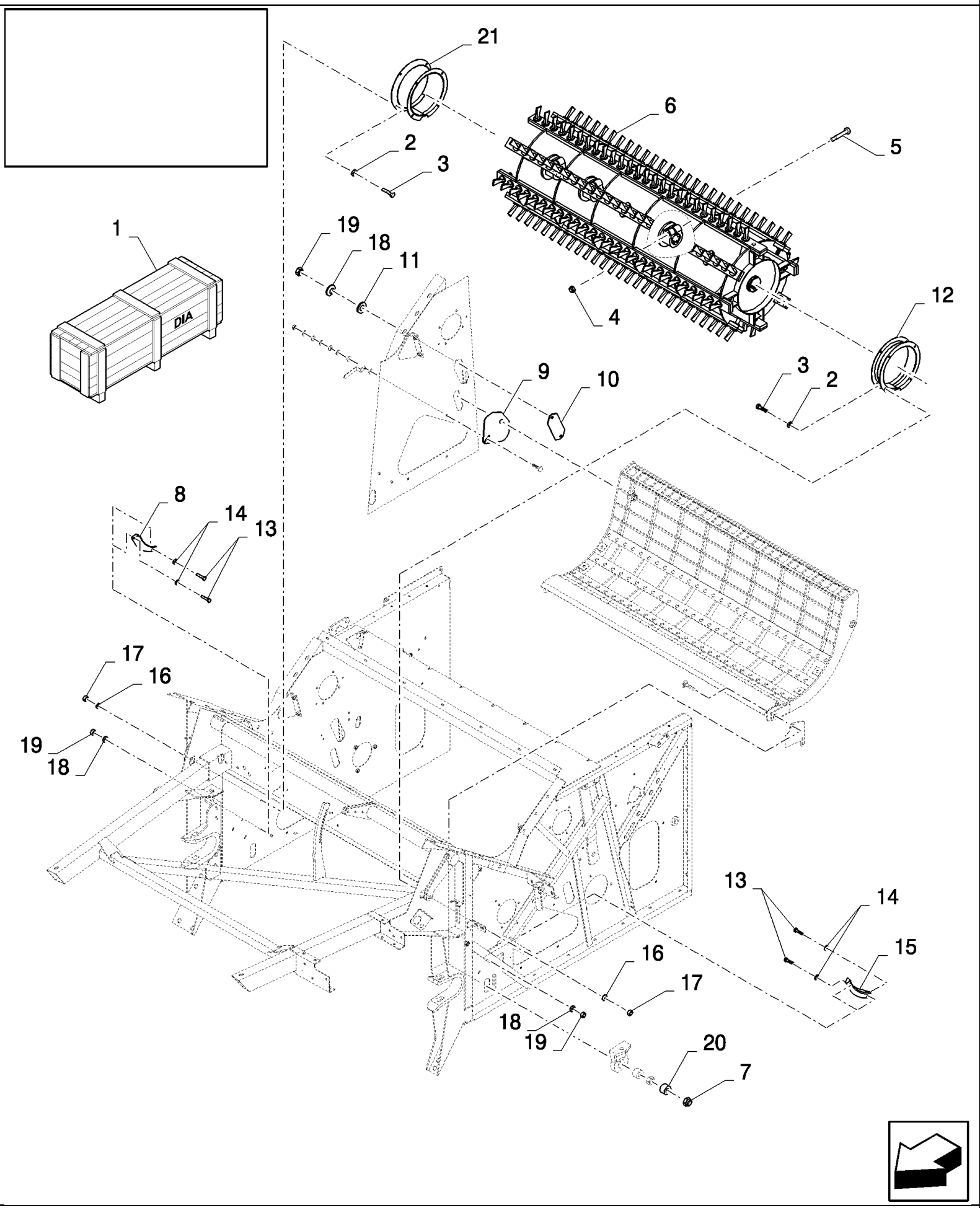

CSX7080 C659 - COMBINE (9/06-8/08)

18.87336943(01) REBUILD KIT - WHEAT TO RICE - 56MM TEETH - WITH ROTARY SEPARATOR

ссылка	Номер детали	Кол-во	Описание
	87336943	1	DIA KIT, HARVESTER,
1	84070039	1	DIA KIT, HARVESTER,
1	84081346	1	DIA KIT, HARVESTER,
1	87333691	1	DIA KIT, HARVESTER,
2	140016	6	WASHER, M8 x 16 x 1.6,
3	120104	6	SCREW, Hex, M8 x 20, 8.8,
4	86000441	4	NUT, M16 x 2, Cl 8,
5	350616	4	SCREW, Hex, M16 x 90, 8.8,
6	84452125	1	DRUM,
7	412180	2	NUT, LOCK, M20 x 2.5, Cl 8, M20
8	354593	1	SHIELD,
9	84443839	1	PLATE, COVER,
10	84443834	1	PLATE, COVER,
11	140040	2	WASHER, M6 x 22 x 2,
12	84452645	1	PROTECTING COVER,
13	120100	4	BOLT, Hex, M6 x 20, 8.8,
14	412649	4	WASHER, SPRING, Belleville, M6,
15	354592	1	SHIELD,
16	322358	6	WASHER, SPRING, Belleville, M8,
17	9706690	6	NUT, M8, Cl 8,
18	322357	6	WASHER, SPRING, Belleville, M6,
19	9706755	6	NUT, M6, Cl 8,
20	84007394	2	BUSHING,
21	424748	1	SHIELD,

CSX7080 C659 - COMBINE (9/06-8/08)

18.87336943(02) REBUILD KIT - WHEAT TO RICE - 56MM TEETH - WITH ROTARY SEPARATOR

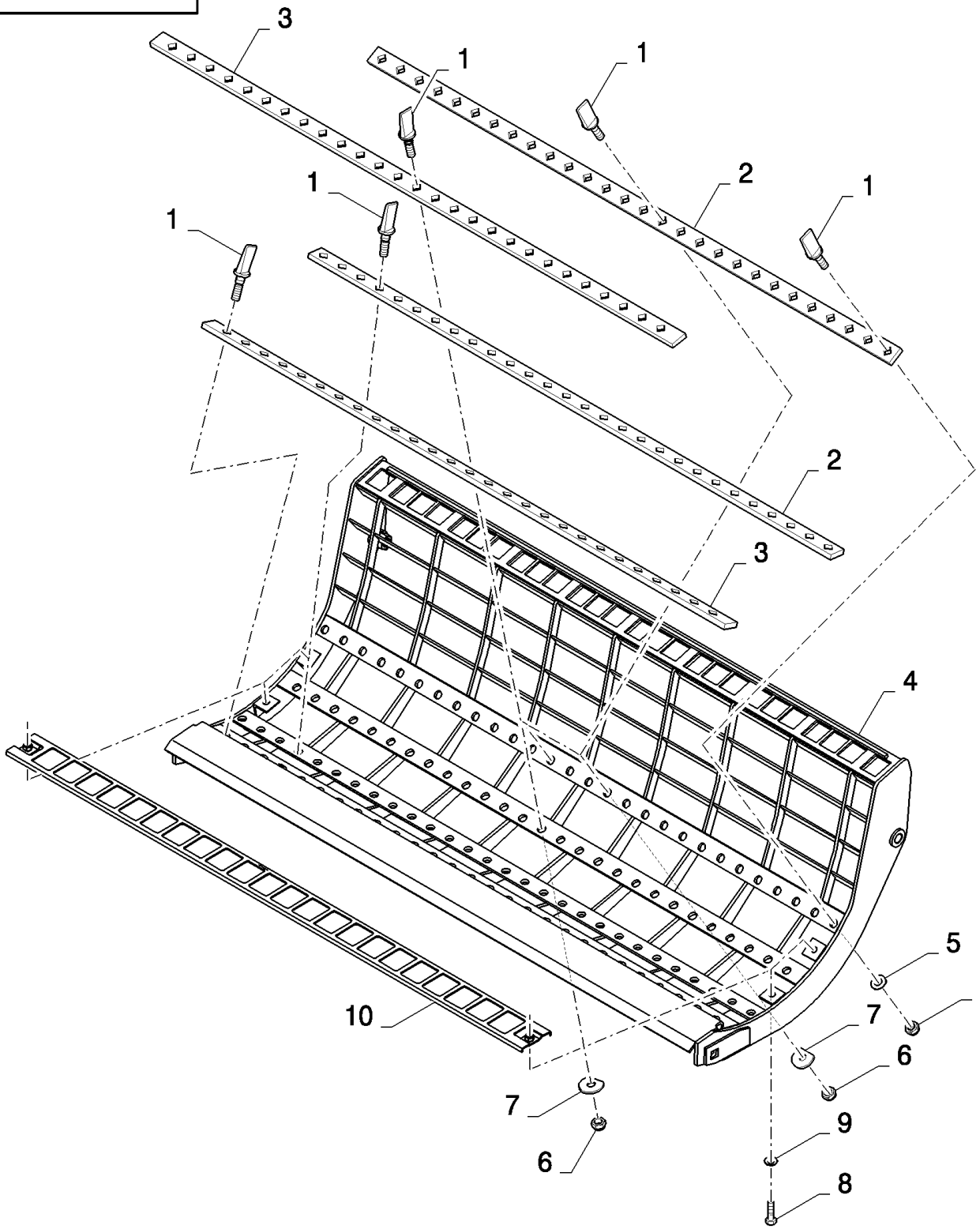

CSX7080 C659 - COMBINE (9/06-8/08)

18.87336943(02) REBUILD KIT - WHEAT TO RICE - 56MM TEETH - WITH ROTARY SEPARATOR

ссылка	Номер детали	Кол-во	Описание
	87336943	1	DIA KIT, HARVESTER,
1	396935	81	TOOTH, RICE,
2	411298	2	PLATE, FIXING,
3	411304	2	PLATE, FIXING,
4	84437361	1	CONCAVE,
5	394631	78	WASHER,
6	86000441	81	NUT, M16 x 2, Cl 8,
7	333041	3	WASHER,
8	43138	4	SCREW, Hex, M10 x 20, 8.8, Full Thd,
9	140045	4	WASHER, SPRING, Belleville, M10,
10	84038642	2	GRILLE,

18.87336943(03) REBUILD KIT - WHEAT TO RICE - 56MM TEETH - WITH ROTARY SEPARATOR

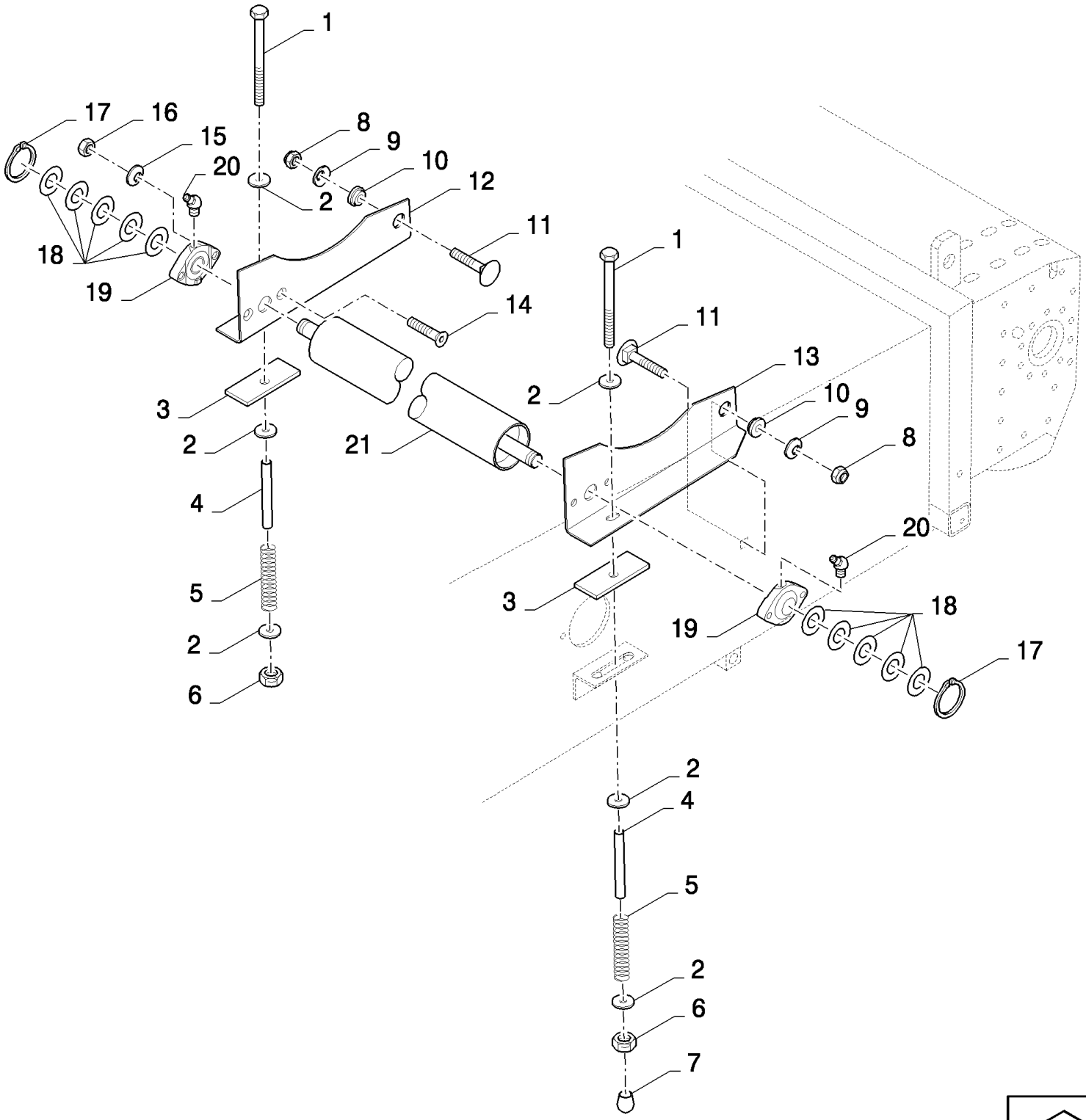

CSX7080 C659 - COMBINE (9/06-8/08)

18.87336943(03) REBUILD KIT - WHEAT TO RICE - 56MM TEETH - WITH ROTARY SEPARATOR

ссылка	Номер детали	Кол-во	Описание
	87336943	1	DIA KIT, HARVESTER,
1	412579	2	BOLT, Hex, M10 x 230, 8.8, M10x230
2	9832748	6	WASHER, 11MM
3	9500474	2	PAD, RUBBER,
4	84334391	2	TUBE,
5	354085	2	SPRING,
6	412141	2	NUT, LOCK, M10 x 1.5, Cl 8,
7	84005018	1	PLUG,
8	100038	2	NUT, M12 x 1.75, Cl 8,
9	140046	2	WASHER, Belleville, M12,
10	9500475	2	BUSHING,
11	120044	2	BOLT, CARRIAGE, Short NK, M12 x 30, Cl8.8, Full Thd,
12	84039236	1	SUPPORT, RH
13	84039235	1	SUPPORT, LH
14	412466	4	SCREW, Hex Soc Flat Hd, M10 x 35, 8.8, M10x40
15	140045	4	WASHER, SPRING, Belleville, M10,
16	100016	4	NUT, M10, Cl 8,
17	370002	2	RING, SNAP, M25, Ext,
18	140229	10	WASHER, 26MM
19	9514667	2	BEARING ASSY,
20	84814929	2	NIPPLE, LUBE,
21	84071544	1	ROLLER, CONVEYOR,
	84334829	2	DECAL,
	86503661	0.01	GREASE, GREASE
	400972	0.01	GREASE
	9504635	0.01	Loctite

CSX7080 C659 - COMBINE (9/06-8/08)

18.87336943(04) REBUILD KIT - WHEAT TO RICE - 56MM TEETH - WITH ROTARY SEPARATOR

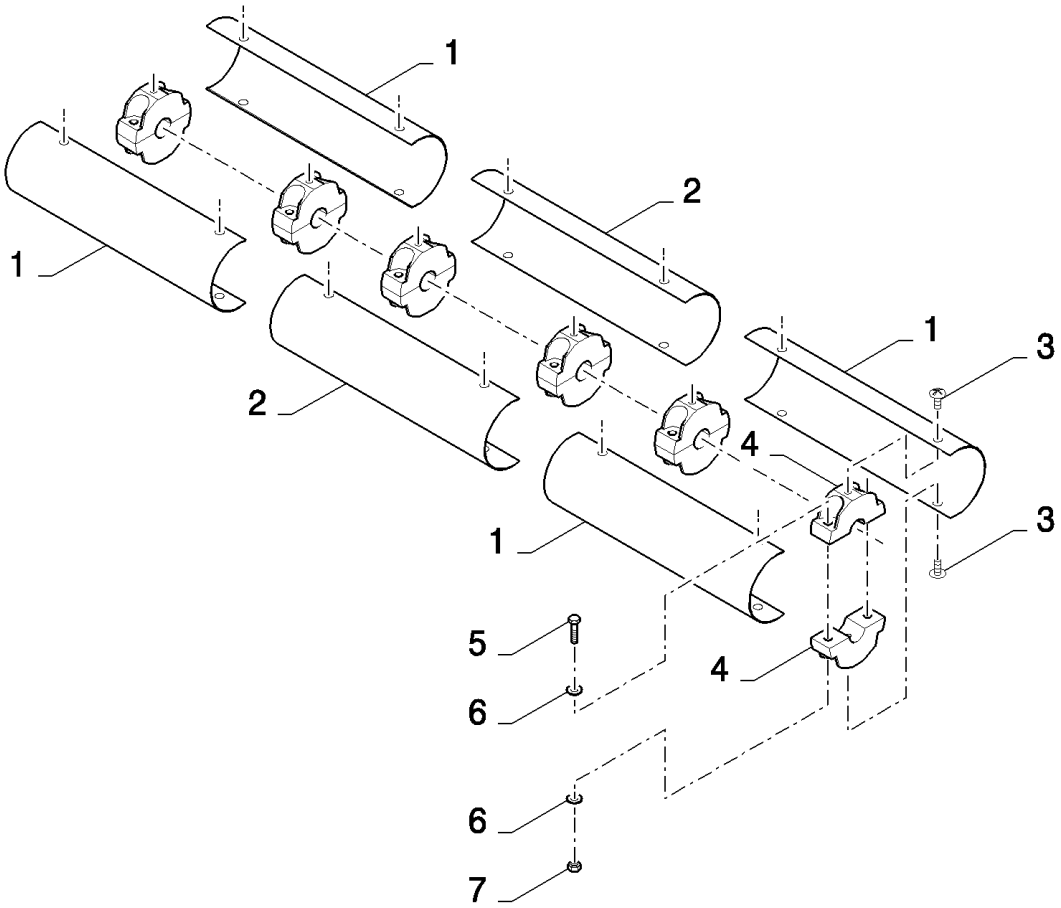

CSX7080 C659 - COMBINE (9/06-8/08)

18.87336943(04) REBUILD KIT - WHEAT TO RICE - 56MM TEETH - WITH ROTARY SEPARATOR

ссылка	Номер детали	Кол-во	Описание
	87336943	1	DIA KIT, HARVESTER,
1	84022121	4	SHIELD,
2	84449037	2	SHIELD,
3	62087	12	SCREW, M8x20
4	89513095	12	CLAMP,
5	386045	12	BOLT, Hex, M8 x 45, 8.8,
6	86511315	24	WASHER, M8 x 16 x 1.6,
7	86629542	12	NUT, LOCK, M8 x 1.25, Cl 8,
	401624	0.02	LOCTITE,

CSX7080 C659 - COMBINE (9/06-8/08)

18.87336945(01) GRAIN THRESHING REBUILD KIT - FROM RICE VERSION - WITH ROTARY SEPARATOR

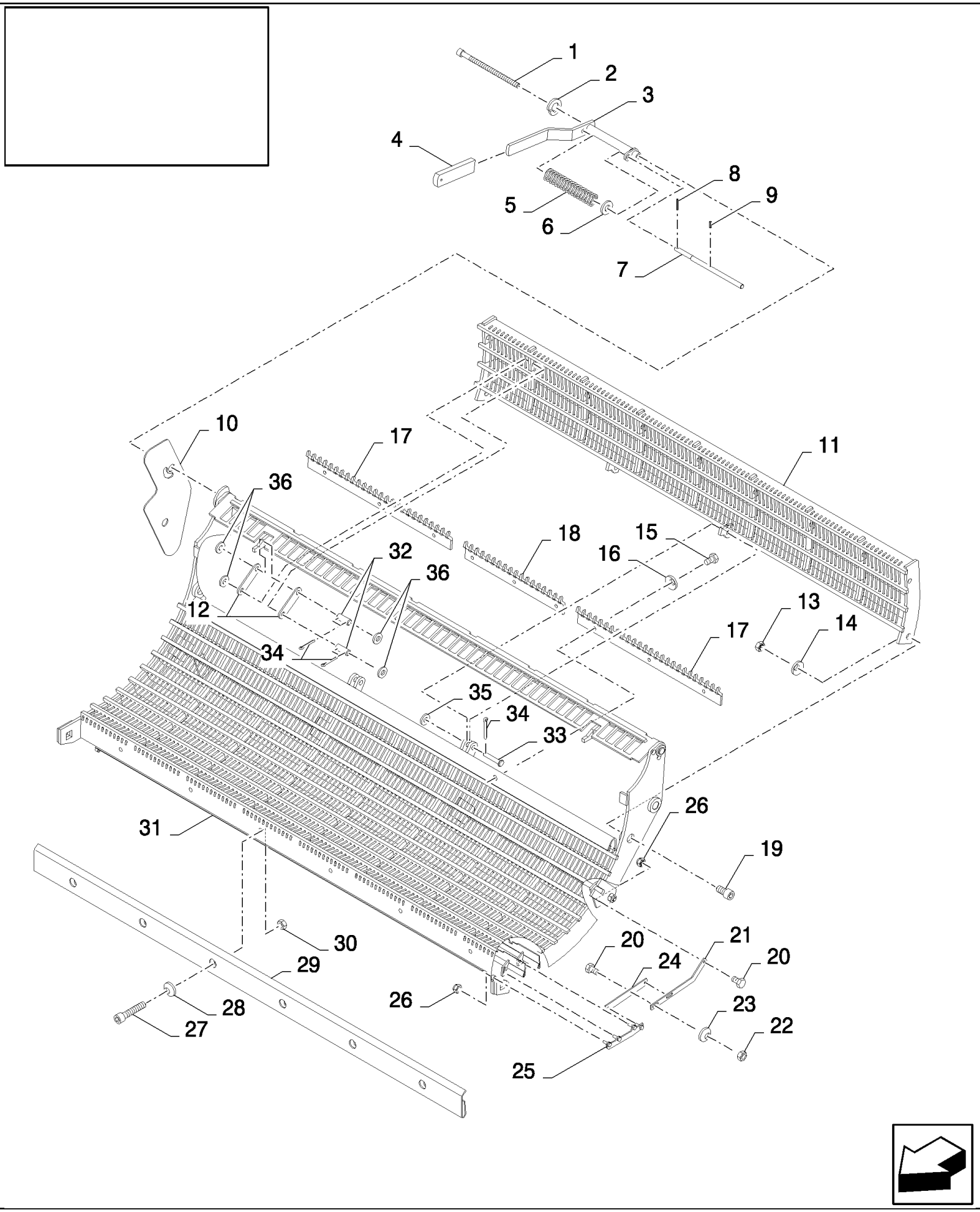

CSX7080 C659 - COMBINE (9/06-8/08)

18.87336945(01) GRAIN THRESHING REBUILD KIT - FROM RICE VERSION - WITH ROTARY SEPARATOR

ссылка	Номер детали	Кол-во	Описание
	87336945	1	DIA KIT, HARVESTER,
1	84077695	1	SCREW, M12x200
2	412123	1	WASHER, M12,
3	84072041	1	LEVER,
4	84439164	1	HANDLE GRIP,
5	321215	1	SPRING,
6	84439368	1	WASHER, 12.5MM
7	84072023	1	SHAFT,
8	9823343	1	PIN, LOCK, M5 x 65, Slotted,
9	300865	1	PIN, LOCK, M3 x 20, Slotted,
10	84431177	1	PLATE,
11	84071997	1	CONCAVE,
12	84441795	4	LEVER,
13	100020	2	NUT, M16, Cl 8,
14	140048	2	WASHER, SPRING, Belleville, M16,
15	120104	9	SCREW, Hex, M8 x 20, 8.8,
16	322358	9	WASHER, SPRING, Belleville, M8,
17	84432976	2	RAKE,
18	84431562	1	RAKE,
19	84077750	2	SCREW, M16x30
20	120100	6	BOLT, Hex, M6 x 20, 8.8,
21	84443709	2	LEVER,
22	9706755	4	NUT, M6, Cl 8,
23	322357	4	WASHER, SPRING, Belleville, M6,
24	84443708	2	LEVER,
25	84443710	2	LEVER,
26	353308	10	NUT, M6 x 1, Cl 8,
27	120052	6	SCREW, Hex Soc Hd, M10 x 25, 8.8,
28	140045	6	WASHER, SPRING, Belleville, M10,
29	84072086	1	SHEET, FRONT,
30	100016	6	NUT, M10, Cl 8,
31	84072139	1	CONCAVE,
32	80324907	4	PIN, ROLL,
33	321018	2	PIN, CLEVIS, M12 x 40,
34	130003	10	PIN, SPLIT (COTTER), M3.2 x 20,
35	86511324	2	WASHER, M12 x 24 x 2.5,
36	378245	8	WASHER, M12,

CSX7080 C659 - COMBINE (9/06-8/08)

18.87336945(02) GRAIN THRESHING REBUILD KIT - FROM RICE VERSION - WITH ROTARY SEPARATOR

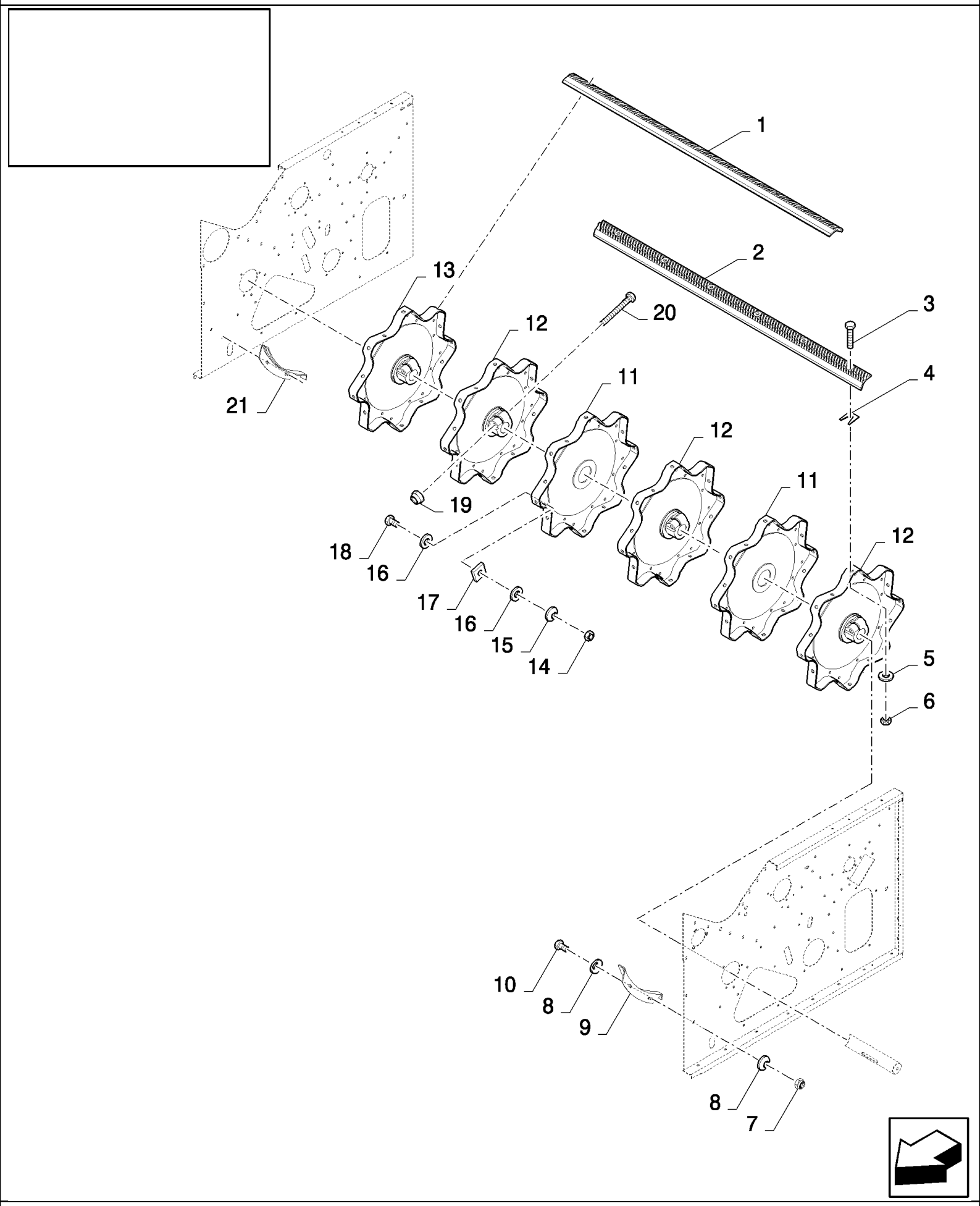

CSX7080 C659 - COMBINE (9/06-8/08)

18.87336945(02) GRAIN THRESHING REBUILD KIT - FROM RICE VERSION - WITH ROTARY SEPARATOR

ссылка	Номер детали	Кол-во	Описание
	87336945	1	DIA KIT, HARVESTER,
1	84438637	2	RASP BAR SET, LH
2	84438638	2	RASP BAR SET, RH
3	385376	48	SCREW, M12x30
4	80481491	24	PLATE, ADJUSTING,
5	394630	48	WASHER,
6	9706685	48	NUT, M12, Cl 8,
7	353308	4	NUT, M6 x 1, Cl 8,
8	322357	8	WASHER, SPRING, Belleville, M6,
9	333222	1	ANGLE BAR,
10	120100	4	BOLT, Hex, M6 x 20, 8.8,
11	394487	2	DISC,
12	84440731	3	DISC,
13	84440736	1	DISC,
14	9706690	6	NUT, M8, Cl 8,
15	322358	6	WASHER, SPRING, Belleville, M8,
16	140041	12	WASHER, M8 x 28 x 3,
17	351518	6	PLATE, ADJUSTING,
18	43128	6	BOLT, Hex, M8 x 30, 8.8,
19	86000441	4	NUT, M16 x 2, Cl 8,
20	350616	4	SCREW, Hex, M16 x 90, 8.8,
21	335307	1	ANGLE BAR,
	86503661	0.04	GREASE, Grease

CSX7080 C659 - COMBINE (9/06-8/08)

18.87336946(01) CORN THRESHING REBUILD KIT - FROM CEREALS VERSION - WITH ROTARY SEPARATOR - ABRASIVE

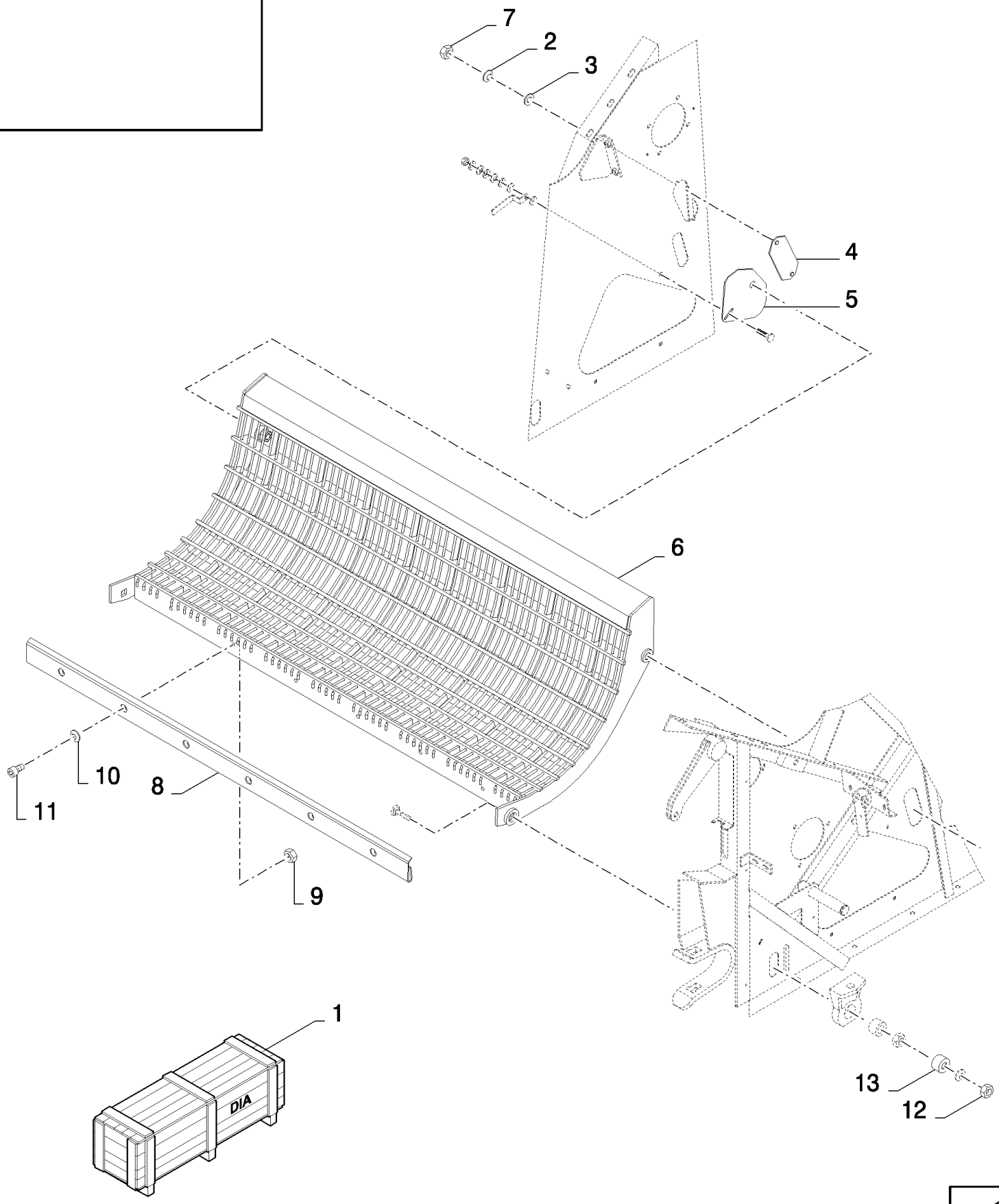

CSX7080 C659 - COMBINE (9/06-8/08)

18.87336946(01) CORN THRESHING REBUILD KIT - FROM CEREALS VERSION - WITH ROTARY SEPARATOR - ABRASIVE

ссылка	Номер детали	Кол-во	Описание
	87336946	1	DIA KIT, HARVESTER,
1	84070039	1	DIA KIT, HARVESTER,
2	322357	2	WASHER, SPRING, Belleville, M6,
3	140040	2	WASHER, M6 x 22 x 2,
4	84443834	1	PLATE, COVER,
5	84443839	1	PLATE, COVER,
6	84076873	1	CONCAVE,
7	9706755	2	NUT, M6, Cl 8,
8	84072086	1	SHEET, FRONT,
9	100016	6	NUT, M10, Cl 8,
10	140045	6	WASHER, SPRING, Belleville, M10,
11	120052	6	SCREW, Hex Soc Hd, M10 x 25, 8.8,
12	380424	2	NUT, LOCK, M20 x 2.5, Cl 8,
13	84007394	2	BUSHING,

18.87336946(02) CORN THRESHING REBUILD KIT - FROM CEREALS VERSION - WITH ROTARY SEPARATOR - ABRASIVE

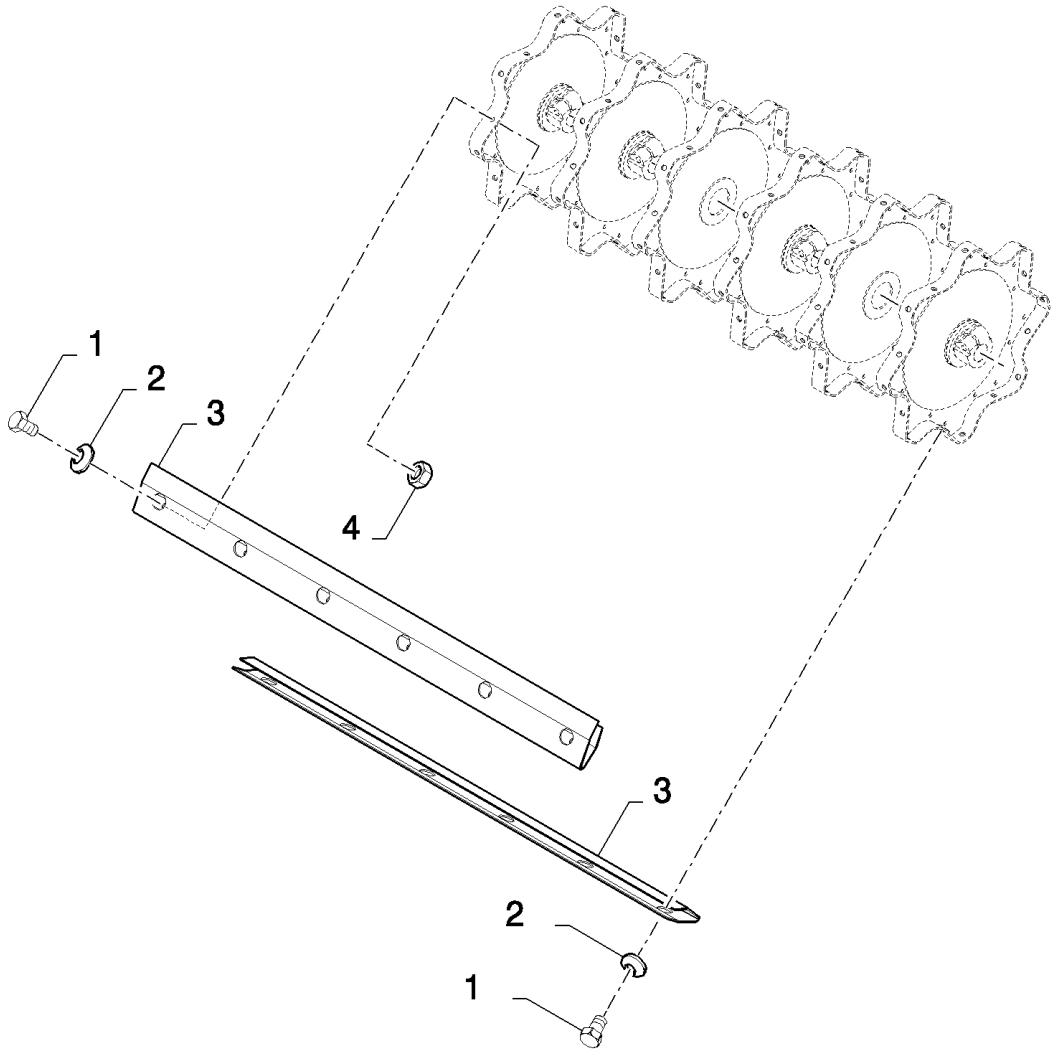

CSX7080 C659 - COMBINE (9/06-8/08)

18.87336946(02) CORN THRESHING REBUILD KIT - FROM CEREALS VERSION - WITH ROTARY SEPARATOR - ABRASIVE

ссылка	Номер детали	Кол-во	Описание
	87336946	1	DIA KIT, HARVESTER,
1	300388	48	SCREW, Hex, M12 x 25, 8.8, M12x25
2	140046	48	WASHER, Belleville, M12,
3	84440498	8	COVER,
4	9706685	36	NUT, M12, Cl 8,

CSX7080 C659 - COMBINE (9/06-8/08)

18.87338847(01) CORN DRIVE REBUILD KIT - 3HB

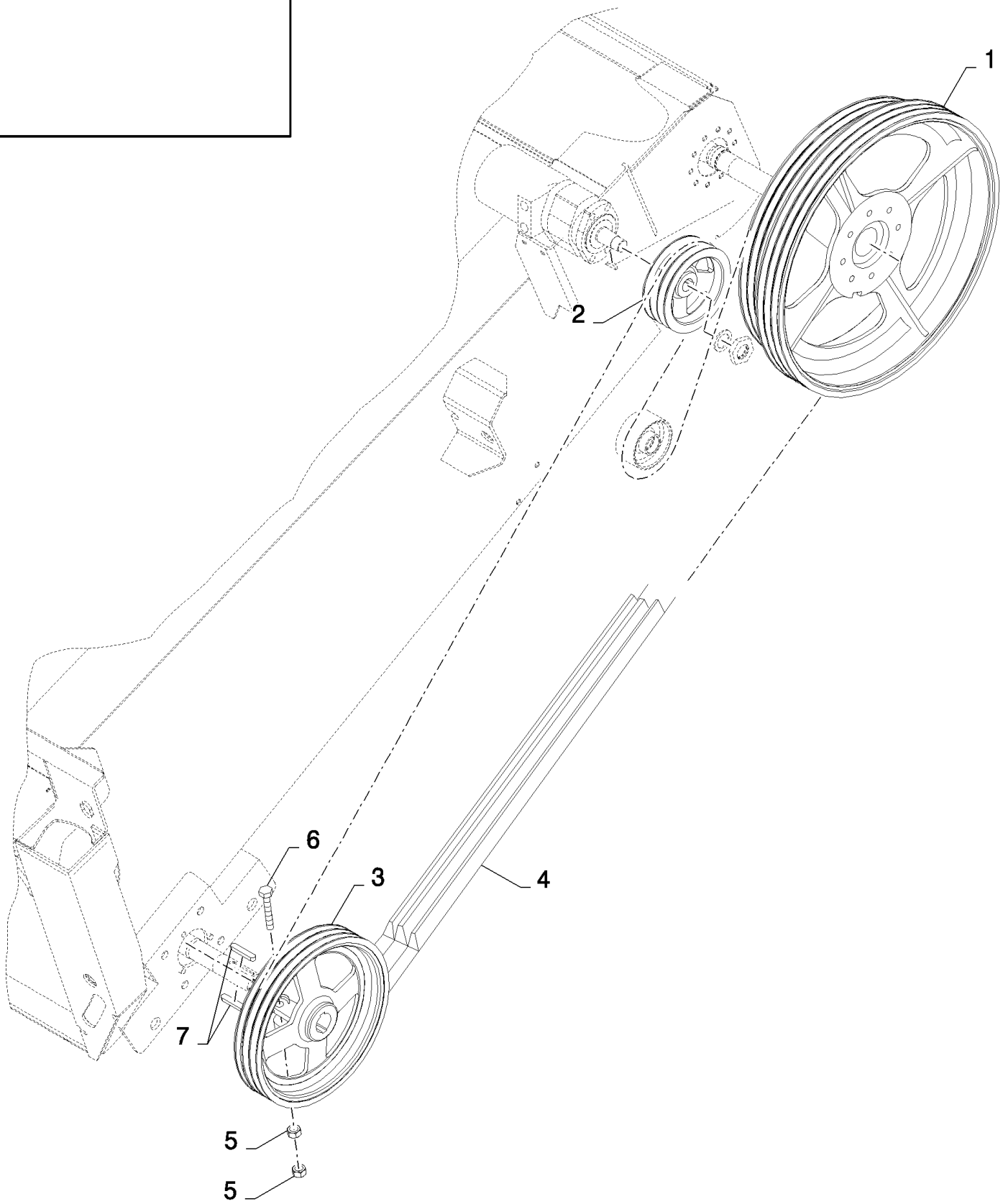

CSX7080 C659 - COMBINE (9/06-8/08)

18.87338847(01) CORN DRIVE REBUILD KIT - 3HB

ссылка	Номер детали	Кол-во	Описание
	87338847	1	DIA KIT, HARVESTER,
1	84980479	1	PULLEY,
2	84980478	1	PULLEY,
3	84980424	1	PULLEY,
4	84991234	1	BELT, TRANSMISSION,
5	100020	2	NUT, M16, Cl 8,
6	350616	1	SCREW, Hex, M16 x 90, 8.8,
7	320607	2	KEY,

CSX7080 C659 - COMBINE (9/06-8/08)

18.87338847(02) CORN DRIVE REBUILD KIT - 3HB

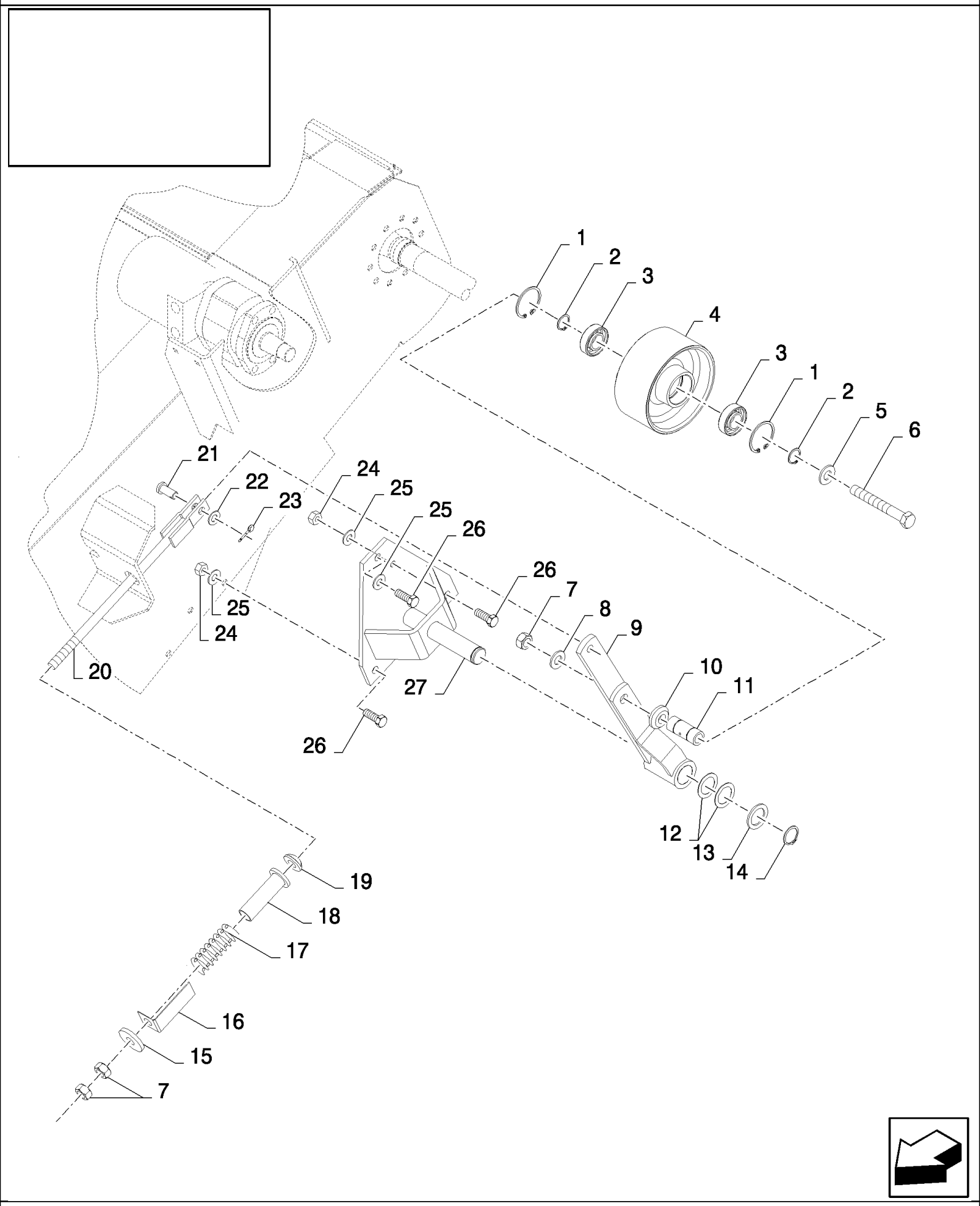

CSX7080 C659 - COMBINE (9/06-8/08)

18.87338847(02) CORN DRIVE REBUILD KIT - 3HB

ссылка	Номер детали	Кол-во	Описание
	87338847	1	DIA KIT, HARVESTER,
1	370011	2	RING, SNAP, M52, Int,
2	370002	2	RING, SNAP, M25, Ext,
3	443898	2	BEARING, BALL,
4	84980775	1	WHEEL, IDLER,
5	378246	1	WASHER, 16MM
6	321246	1	BOLT, Hex, M16 x 120, 8.8,
7	100020	3	NUT, M16, Cl 8,
8	140048	1	WASHER, SPRING, Belleville, M16,
9	84980710	1	ARM,
10	84980619	1	BUSHING,
11	84980609	1	BUSHING,
12	441176	2	WASHER, 31MM
13	84814901	1	WASHER,
14	370003	1	RING, SNAP, M30, Ext,
15	84005115	1	WASHER, 17MM
16	84981584	1	INDICATOR,
17	359641	1	SPRING,
18	84981585	1	TUBE,
19	450869	1	WASHER,
20	84981179	1	ROD,
21	412209	1	PIN, CLEVIS, M12 x 30,
22	140223	1	WASHER, 13MM
23	130004	1	PIN, SPLIT (COTTER), M3.2 x 25,
24	9706685	2	NUT, M12, Cl 8,
25	140046	3	WASHER, Belleville, M12,
26	86629541	3	BOLT, Hex, M12 x 40, 8.8, Full Thd,
27	84980730	1	SUPPORT,
	86503661	0.05	GREASE, Grease

CSX7080 C659 - COMBINE (9/06-8/08)

18.87338847(03) CORN DRIVE REBUILD KIT - 3HB

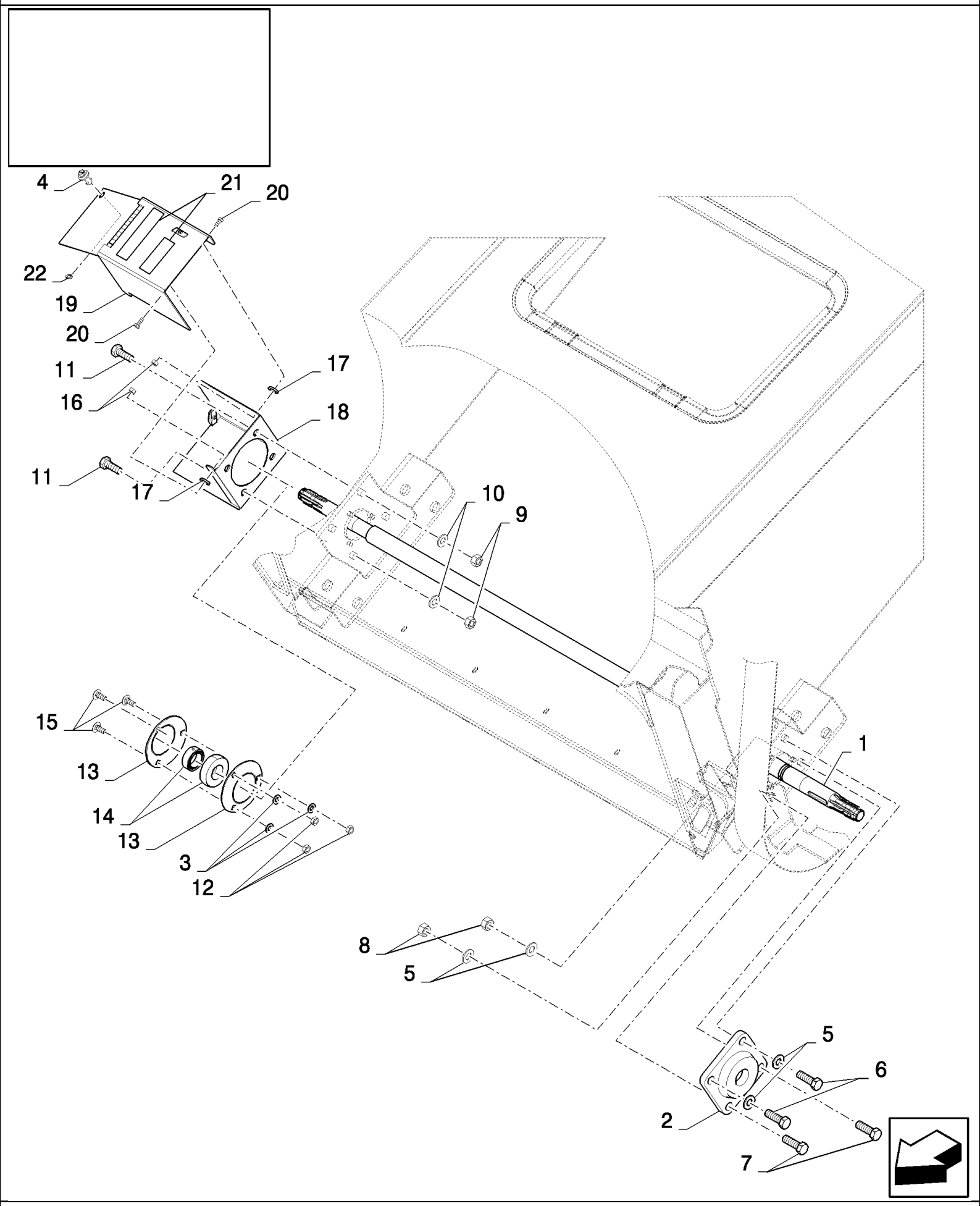

CSX7080 C659 - COMBINE (9/06-8/08)

18.87338847(03) CORN DRIVE REBUILD KIT - 3HB

ссылка	Номер детали	Кол-во	Описание
	87338847	1	DIA KIT, HARVESTER,
1	84980405	1	SHAFT,
2	89814384	1	BEARING ASSY,
3	140045	3	WASHER, SPRING, Belleville, M10,
4	89514603	1	LOCK,
5	140048	4	WASHER, SPRING, Belleville, M16,
6	120090	2	SCREW, Hex, M16 x 50, 8.8,
7	120091	2	BOLT, Hex, M16 x 60, 8.8,
8	100020	2	NUT, M16, Cl 8,
9	9706685	4	NUT, M12, Cl 8,
10	140046	4	WASHER, Belleville, M12,
11	9706687	4	SCREW, Hex, M12 x 30, 8.8,
12	100016	3	NUT, M10, Cl 8,
13	36403	2	FLANGE,
14	322360	1	BEARING, BALL,
15	338949	3	BOLT, CARRIAGE, Short NK, M10 x 25, Cl8.8, Full Thd,
16	412152	2	NUT, LOCK, M6 x 1, Cl 8.8,
17	140015	6	WASHER, 6MM
18	84981803	1	SHIELD,
19	84981804	1	SHIELD,
20	120100	2	BOLT, Hex, M6 x 20, 8.8,
21	401502	1	STRIP, ANTI-SKID, 0.25m
22	9514605	1	WASHER,
	84014117	1	DECAL,
	400972	0.05	grease
	86503661	0.05	GREASE, grease

CSX7080 C659 - COMBINE (9/06-8/08)

18.87338847(04) CORN DRIVE REBUILD KIT - 3HB

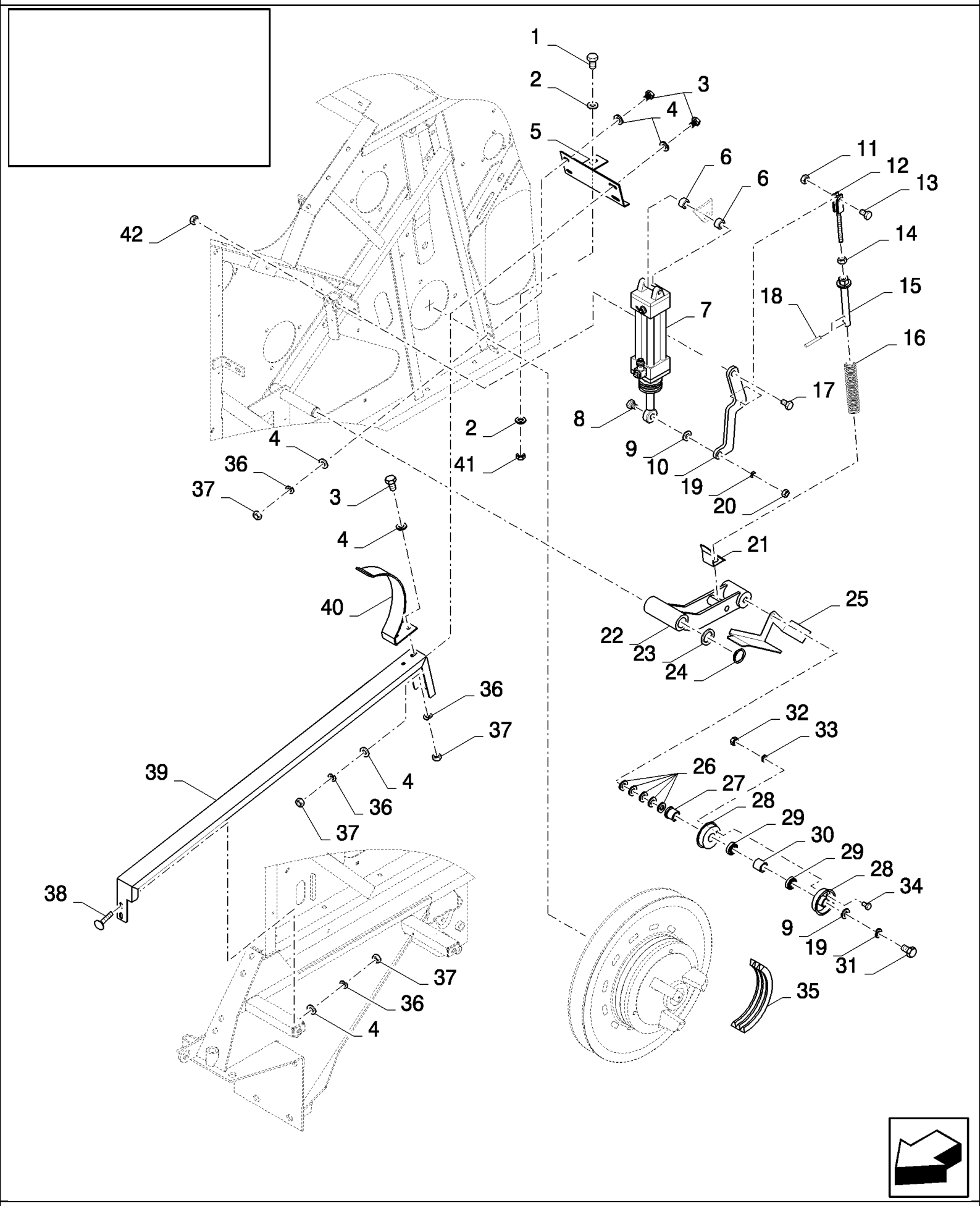

CSX7080 C659 - COMBINE (9/06-8/08)

18.87338847(04) CORN DRIVE REBUILD KIT - 3HB

ссылка	Номер детали	Кол-во	Описание
	87338847	1	DIA KIT, HARVESTER,
1	43140	1	BOLT, Hex, M10 x 30, 8.8, Full Thd,
2	140045	2	WASHER, SPRING, Belleville, M10,
3	120104	6	SCREW, Hex, M8 x 20, 8.8,
4	378243	12	WASHER, M8,
5	84072926	1	SUPPORT,
6	84021736	2	SLEEVE,
7	84432515	1	CYLINDER,
8	120091	1	BOLT, Hex, M16 x 60, 8.8,
9	140093	2	WASHER, 17MM
10	84077727	1	LEVER,
11	100037	1	NUT, M10 x 1.5, Cl 8,
12	84072638	1	YOKE,
13	325829	1	BOLT, Hex, M10 x 45, 8.8, M10x45
14	9706685	1	NUT, M12, Cl 8,
15	84446689	1	REGULATOR,
16	84446705	1	SPRING,
17	120092	1	SCREW, Hex, M16 x 70, 8.8,
18	300872	2	PIN, LOCK, M8 x 36, Slotted,
19	140048	2	WASHER, SPRING, Belleville, M16,
20	100020	1	NUT, M16, Cl 8,
21	84446619	1	INDICATOR,
22	84446614	1	LEVER,
23	140108	1	WASHER, 31MM
24	370003	1	RING, SNAP, M30, Ext,
25	84983455	1	PLATE,
26	140090	5	WASHER, 17MM
27	427248	1	BUSHING,
28	84441735	2	HALF-PULLEY,
29	443898	2	BEARING, BALL,
30	430235	1	SPACER,
31	43874	1	SCREW, Hex, M16 x 110, 8.8,
32	15896221	3	NUT, M6, Cl 10,
33	322357	3	WASHER, SPRING, Belleville, M6,
34	86508568	3	SCREW, Hex, M6 x 16, 8.8,
35	89817374	1	BELT, TRANSMISSION,
36	322358	8	WASHER, SPRING, Belleville, M8,
37	9706690	8	NUT, M8, Cl 8,
38	86507486	2	BOLT, CARRIAGE, Short NK, M8 x 20, Cl8.8, Full Thd,
39	84072929	1	GUIDE,
40	84989940	1	GUIDE,
41	100016	1	NUT, M10, Cl 8,
42	86000441	1	NUT, M16 x 2, Cl 8,
	86503661	0.02	GREASE, Grease

CSX7080 C659 - COMBINE (9/06-8/08)

18.87338847(05) CORN DRIVE REBUILD KIT - 3HB

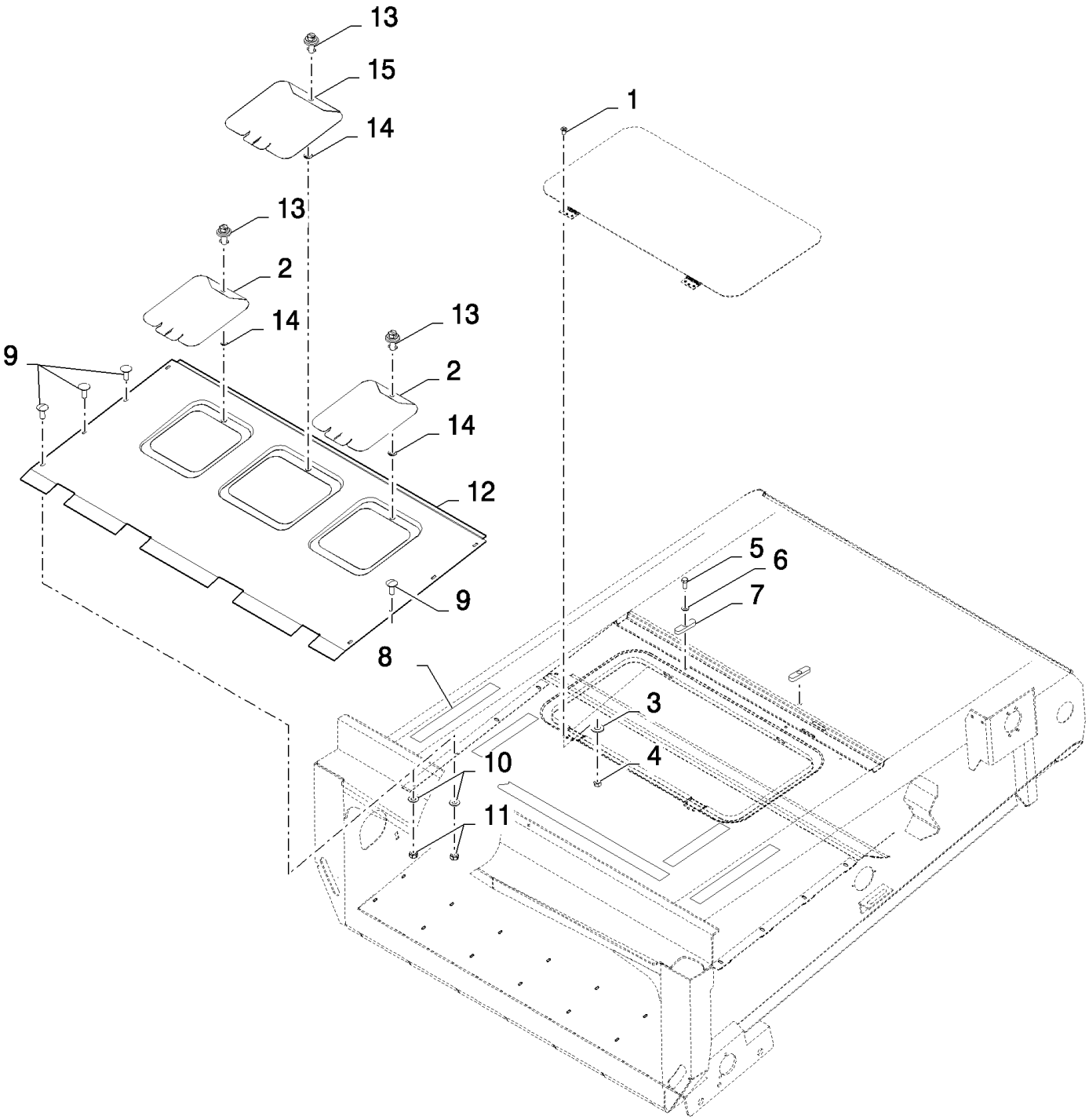

CSX7080 C659 - COMBINE (9/06-8/08)

18.87338847(05) CORN DRIVE REBUILD KIT - 3HB

ссылка	Номер детали	Кол-во	Описание
	87338847	1	DIA KIT, HARVESTER,
1	120100	6	BOLT, Hex, M6 x 20, 8.8,
2	84448921	2	COVER,
3	322357	6	WASHER, SPRING, Belleville, M6,
4	15896221	6	NUT, M6, Cl 10,
5	120104	2	SCREW, Hex, M8 x 20, 8.8,
6	378243	2	WASHER, M8,
7	84982331	2	CLIP,
8	401502	1	STRIP, ANTI-SKID, L=1.97M
9	86507486	8	BOLT, CARRIAGE, Short NK, M8 x 20, Cl8.8, Full Thd,
10	9706690	8	NUT, M8, Cl 8,
11	322358	8	WASHER, SPRING, Belleville, M8,
12	84449007	1	PLATE,
13	9514603	3	LOCK,
14	9514605	3	WASHER,
15	84448919	1	COVER,
	84004734	2	DECAL,

CSX7080 C659 - COMBINE (9/06-8/08)

18.87358813(01) AIR COMPRESSOR KIT

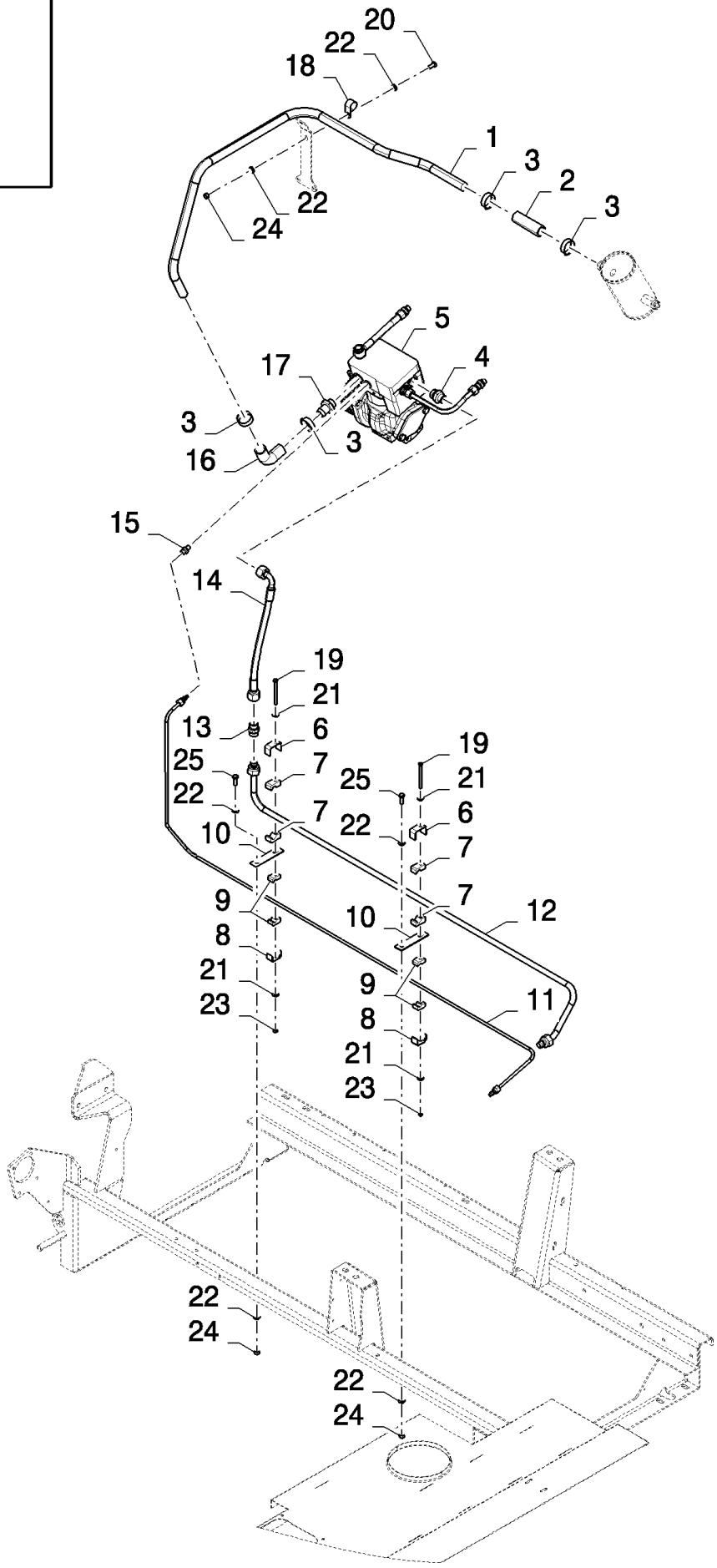

CSX7080 C659 - COMBINE (9/06-8/08)

18.87358813(01) AIR COMPRESSOR KIT

ссылка	Номер детали	Кол-во	Описание
	87358813		DIA KIT, HARVESTER,
1	84460946	1	PIPE, VENTILATION,
2	84334169	1	HOSE,
3	382527	4	CLAMP, HOSE,
4	84435826	1	CONNECTOR, HYD.,
5	87520365	1	COMPRESSOR, AIR,
6	433100	2	SUPPORT,
7	433007	4	CLAMP,
8	433101	2	SUPPORT,
9	433008	4	CLAMP,
10	87523425	2	PLATE,
11	87526153	1	PIPE, VENTILATION,
12	87526151	1	PIPE, VENTILATION,
13	335174	1	CONNECTOR, HYD.,
14	87370312	1	TUBE,
15	9513082	1	CONNECTOR, HYD.,
16	84334134	1	HOSE,
17	84036669	1	CONNECTOR, HYD.,
18	9827902	1	CLAMP, 1", Insul, 3/8" Bolt,
19	86508570	2	SCREW, Hex, M6 x 80, 8.8,
20	120104	1	SCREW, Hex, M8 x 20, 8.8,
21	412649	4	WASHER, SPRING, Belleville, M6,
22	322358	6	WASHER, SPRING, Belleville, M8,
23	9706755	2	NUT, M6, Cl 8,
24	9706690	3	NUT, M8, Cl 8,
25	43127	2	BOLT, Hex, M8 x 25, 8.8,

CSX7080 C659 - COMBINE (9/06-8/08)

18.87358813(02) AIR COMPRESSOR KIT

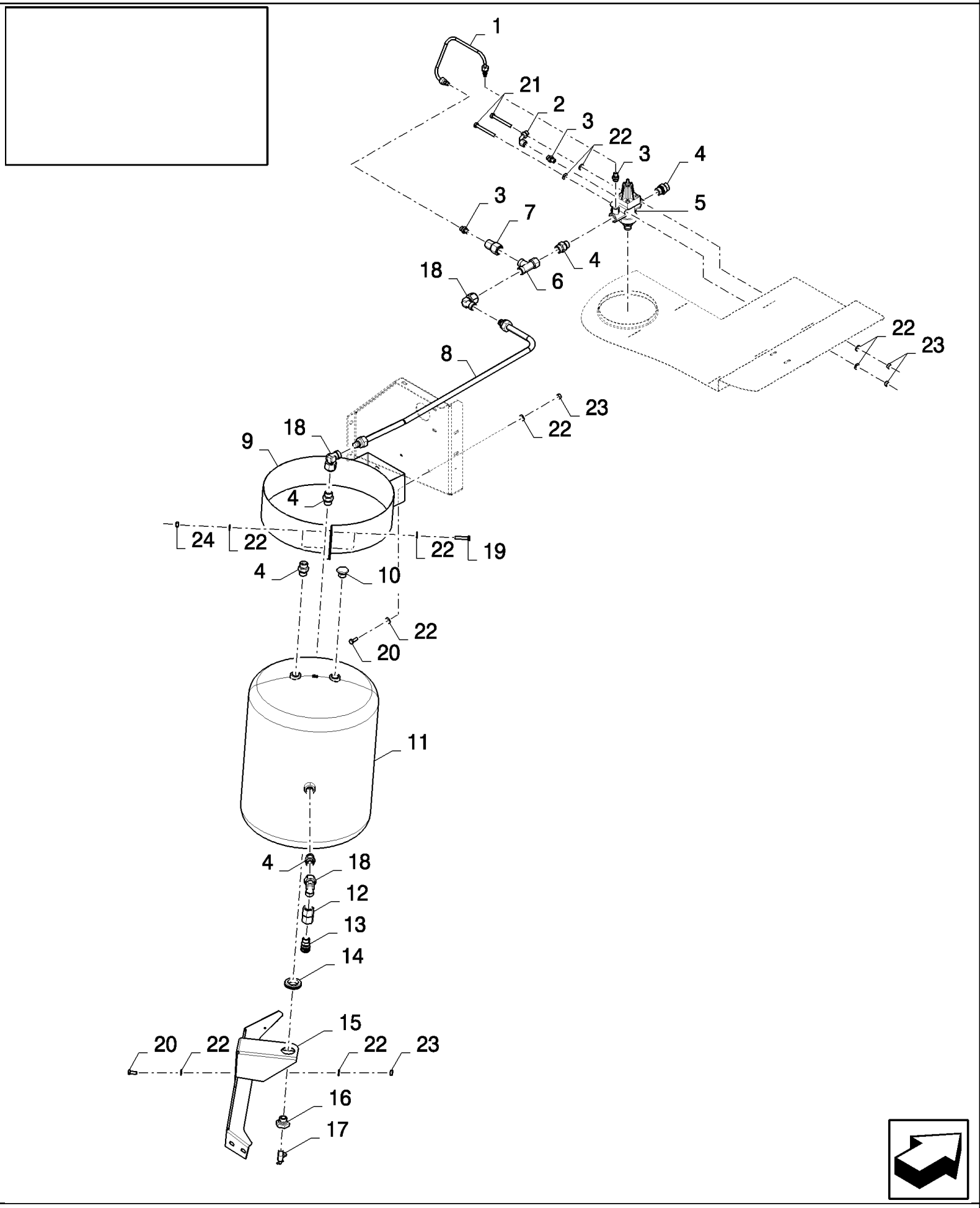

CSX7080 C659 - COMBINE (9/06-8/08)

18.87358813(02) AIR COMPRESSOR KIT

ссылка	Номер детали	Кол-во	Описание
	87358813		DIA KIT, HARVESTER,
1	87523412	1	PIPE, VENTILATION,
2	418283	1	ELBOW,
3	9513082	3	CONNECTOR, HYD.,
4	9516263	4	CONNECTOR, HYD.,
5	84440618	1	VALVE, PRESSURE RELIEF,
6	84042903	1	CONNECTOR, HYD.,
7	9838275	1	CONNECTOR, HYD.,
8	87540798	1	PIPE, VENTILATION,
9	87345148	1	SUPPORT,
10	84814963	1	CONNECTOR, HYD.,
11	84019044	1	RESERVOIR, AIR,
12	84433625	1	CONNECTOR, HYD.,
13	84043491	1	COUPLING, QUICK, MALE,
14	129959	1	GROMMET,
15	87542411	1	SUPPORT,
16	84019122	1	CONNECTOR, HYD.,
17	441031	1	DRAINCOCK/TAP, SUPPLY,
18	84440128	3	CONNECTOR, HYD.,
19	43129	2	BOLT, Hex, M8 x 40, 8.8,
20	120104	4	SCREW, Hex, M8 x 20, 8.8,
21	43133	2	SCREW, Hex, M8 x 80, 8.8,
22	322358	16	WASHER, SPRING, Belleville, M8,
23	9706690	6	NUT, M8, Cl 8,
24	86629542	2	NUT, LOCK, M8 x 1.25, Cl 8,

CSX7080 C659 - COMBINE (9/06-8/08)

18.87391043(01) UPPER SIEVE HART CARTER 1 5/8" - SELF LEVELLING SHOE

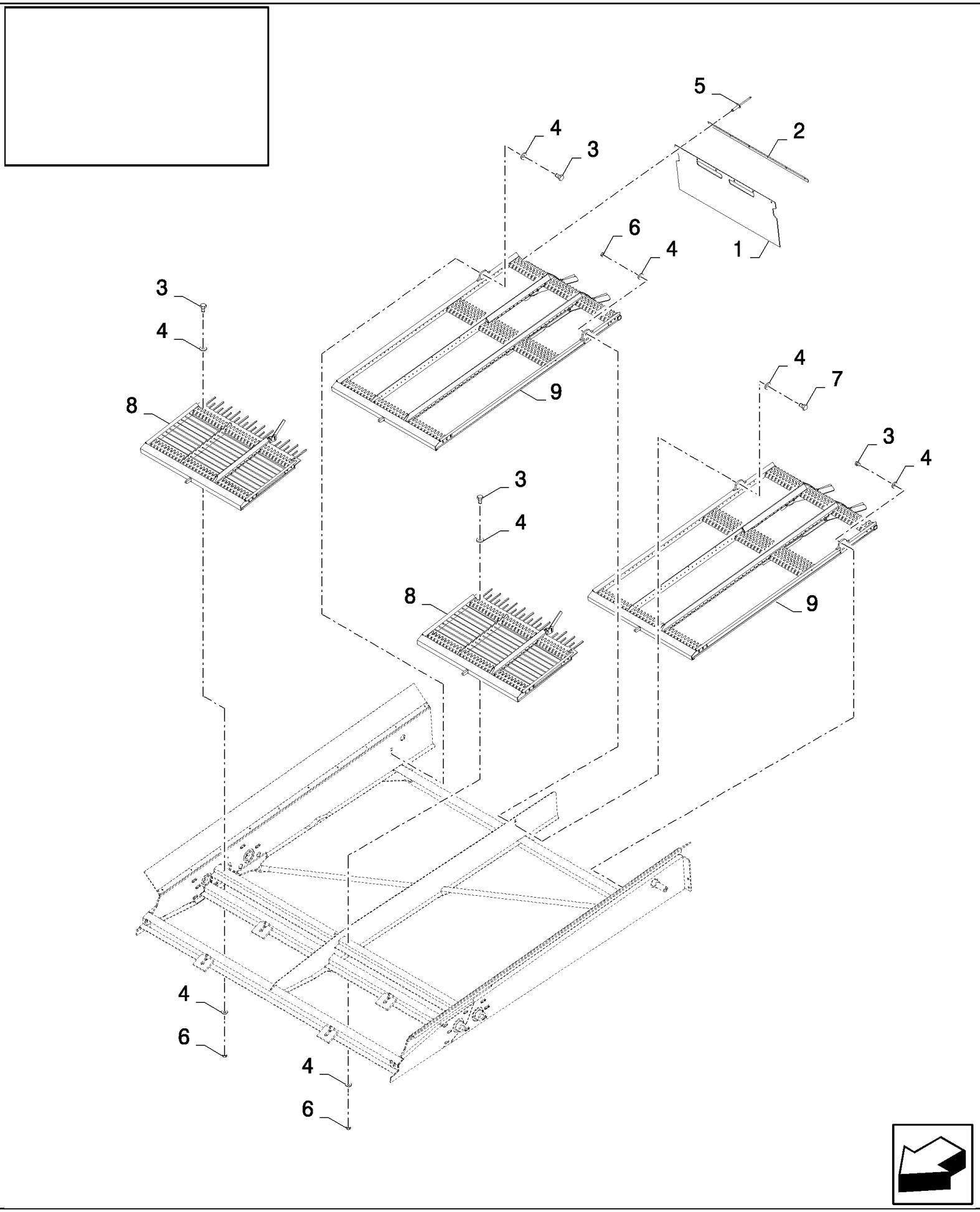

CSX7080 C659 - COMBINE (9/06-8/08)

18.87391043(01) UPPER SIEVE HART CARTER 1 5/8" - SELF LEVELLING SHOE

ссылка	Номер детали	Кол-во	Описание
	87391043		DIA KIT, HARVESTER,
1	84462961	2	CANVAS,
2	84459122	2	PLATE, FIXING,
3	43139	6	SCREW, Hex, M10 x 25, 8.8, Full Thd,
4	140045	12	WASHER, SPRING, Belleville, M10,
5	445395	12	RIVET, Pop, M4.8 x 18.1,
6	100016	5	NUT, M10, Cl 8,
7	9706704	1	BOLT, Hex, M10 x 35, 8.8, Full Thd,
8	84458866	2	SIEVE,
9	84460101	2	SIEVE,

CSX7080 C659 - COMBINE (9/06-8/08)

18.87391366(01) SWITCH - VARIFEED IN CAB

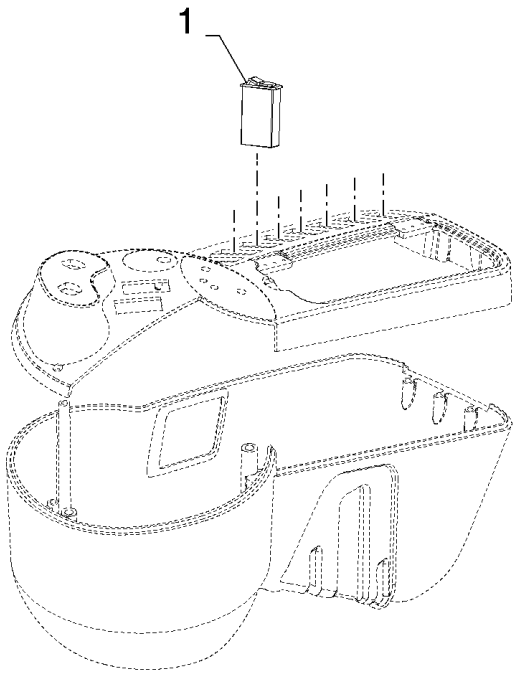

CSX7080 C659 - COMBINE (9/06-8/08)

18.87391366(01) SWITCH - VARIFEED IN CAB

ссылка	Номер детали	Кол-во	Описание
	87391366		DIA KIT, HARVESTER,
1	87378253	1	SWITCH, Feeder variator

18.87395580(01) LIGHT KIT - FLIP-UP CORNHEADER

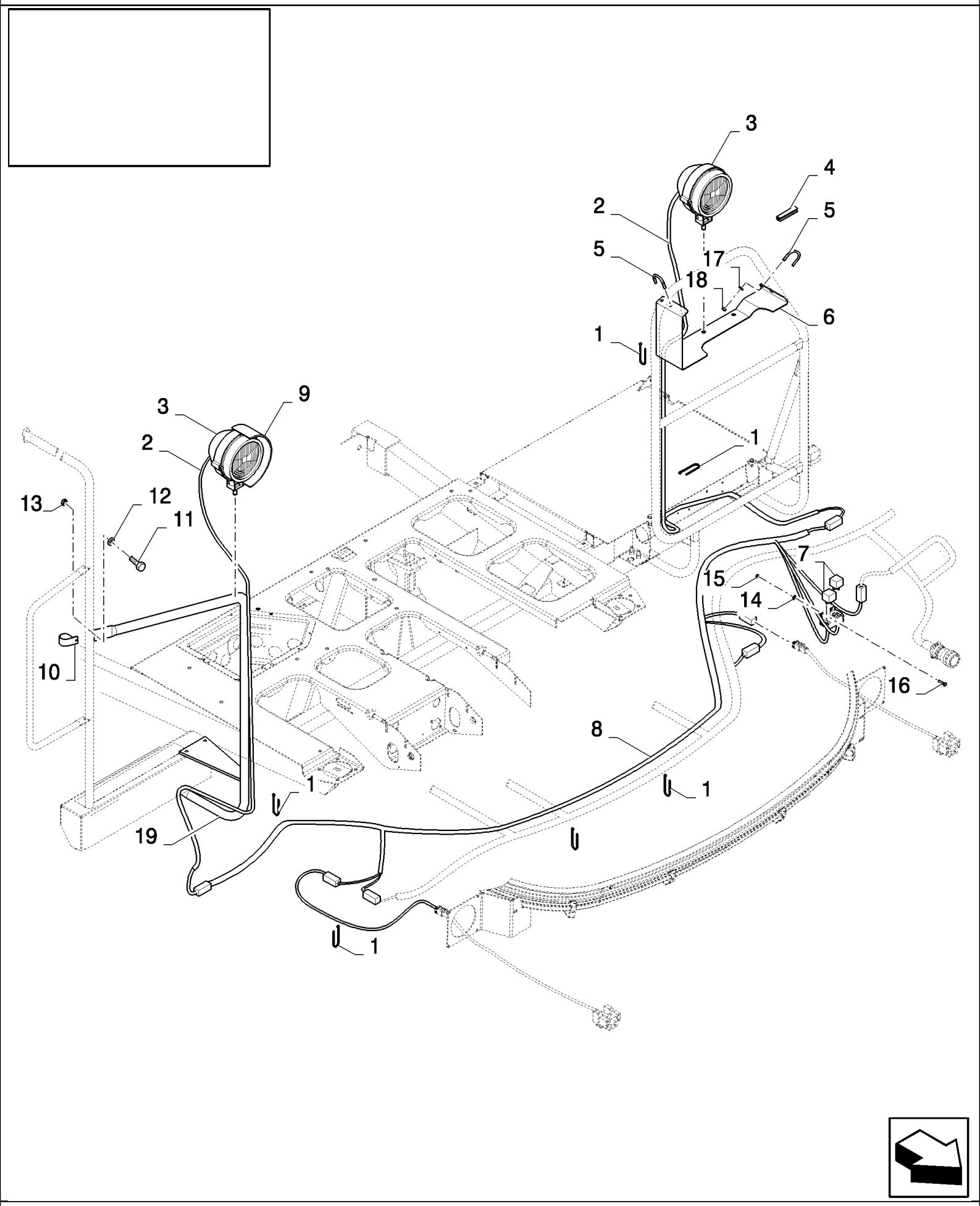

CSX7080 C659 - COMBINE (9/06-8/08)

18.87395580(01) LIGHT KIT - FLIP-UP CORNHEADER

ссылка	Номер детали	Кол-во	Описание
	87395580		DIA KIT, HARVESTER,
1	89993154	19	CLAMP,
2	84448631	2	HARNESS, WIRE,
3	418863	2	LAMP,
4	89850033	1	SEAL, L=0.07M
5	84448555	2	U-BOLT,
6	84448518	1	SUPPORT,
7	84000651	2	RELAY,
8	84448868	1	HARNESS, WIRE,
9	84039151	1	PLATE, COVER,
10	9513271	1	CLAMP,
11	120104	1	SCREW, Hex, M8 x 20, 8.8,
12	378243	1	WASHER, M8,
13	9628098	1	NUT, LOCK, M8 x 1.25, Cl 10,
14	322356	2	WASHER, 5MM
15	86508813	2	NUT, M5, Cl 8,
16	120098	2	BOLT, Hex, M5 x 20, 8.8, Full Thd,
17	322357	4	WASHER, SPRING, Belleville, M6,
18	9706755	4	NUT, M6, Cl 8,
19	87516453	1	SUPPORT,

CSX7080 C659 - COMBINE (9/06-8/08)

18.87395580(02) LIGHT KIT - FLIP-UP CORNHEADER

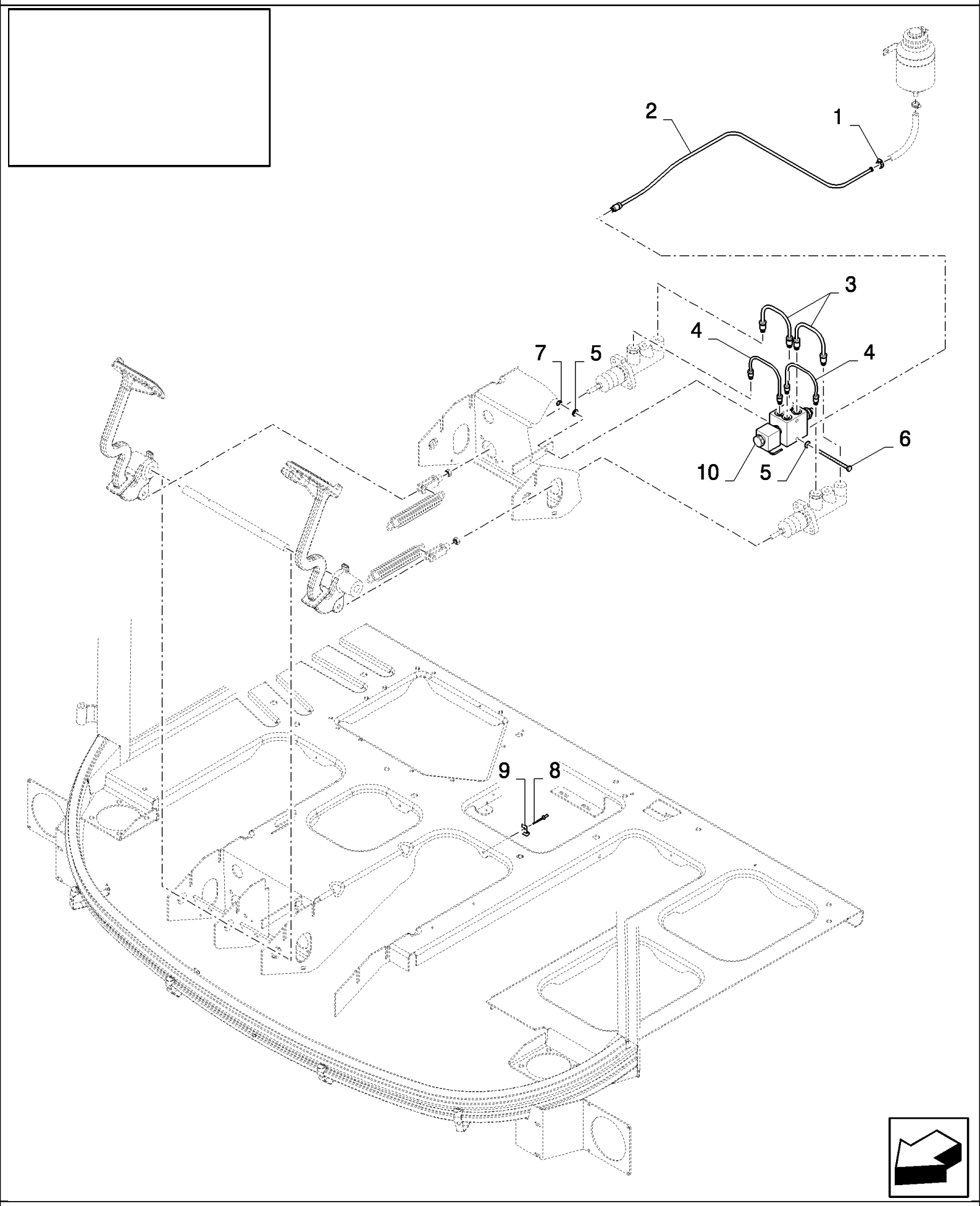

CSX7080 C659 - COMBINE (9/06-8/08)

18.87395580(02) LIGHT KIT - FLIP-UP CORNHEADER

ссылка	Номер детали	Кол-во	Описание
	87395580		DIA KIT, HARVESTER,
1	913888	1	CLAMP, HOSE,
2	84448948	1	BRAKE LINE,
3	84817771	2	TUBE, HYD,
4	84817773	2	TUBE, HYD,
5	322357	2	WASHER, SPRING, Belleville, M6,
6	86508569	1	BOLT, Hex, M6 x 70, 8.8, M6x70
7	9706755	1	NUT, M6, Cl 8,
8	425520	1	RIVET,
9	412089	1	CLAMP,
10	84607499	1	VALVE, HYDRAULIC,

CSX7080 C659 - COMBINE (9/06-8/08)

18.87395583(01) CHAFF SPREADER - REKORD

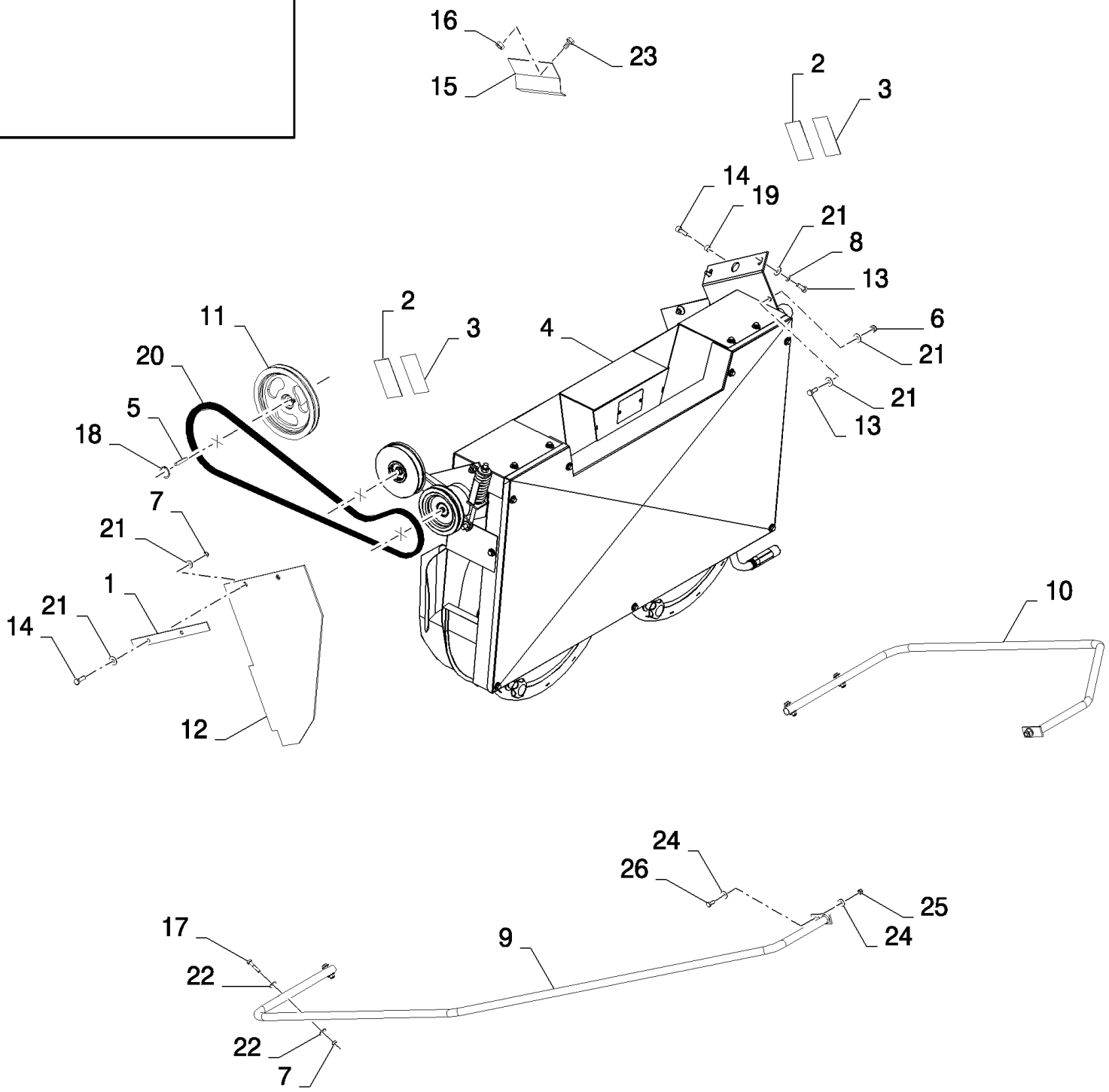

CSX7080 C659 - COMBINE (9/06-8/08)

18.87395583(01) CHAFF SPREADER - REKORD

ссылка	Номер детали	Кол-во	Описание
	87395583		DIA KIT, HARVESTER,
1	84800261	2	BRACKET,
2	84056170	2	DECAL,
3	84014117	2	DECAL,
4	84800262	1	HOUSING,
5	170010	1	KEY, M10
6	100037	8	NUT, M10 x 1.5, Cl 8, 8M
7	86629542	6	NUT, LOCK, M8 x 1.25, Cl 8, 10.2MM
8	140045	2	WASHER, SPRING, Belleville, M10,
9	84800263	1	PIPE,
10	NS	2	NOT SERVICED,
11	84800265	1	PULLEY,
12	84800266	2	SHIELD,
13	11106231	6	BOLT, Hex, M10 x 25, 10.9, Full Thd, M10x25
14	43140	5	BOLT, Hex, M10 x 30, 8.8, Full Thd,
15	336199	4	BOLT, Hex, M8 x 12, 8.8, Full Thd,
16	120104	2	SCREW, Hex, M8 x 20, 8.8,
17	43129	5	BOLT, Hex, M8 x 40, 8.8,
18	370003	1	RING, SNAP, M30, Ext,
19	84800267	1	SPACER,
20	84790244	1	BELT, TRANSMISSION,
21	378244	18	WASHER, M10,
22	307789	14	WASHER, 8.4MM
23	84800268	1	PIPE,
24	140223	4	WASHER,
25	100038	2	NUT, M12 x 1.75, Cl 8,
26	300388	2	SCREW, Hex, M12 x 25, 8.8,
27	84800269	1	BRACKET,
28	84800270	1	PIPE,
29	120161	1	BOLT, Hex, M8 x 25, 8.8, M8x25
30	100067	4	NUT, LOCK, M8 x 1.25, Cl 8,

18.87395583(02) CHAFF SPREADER - REKORD

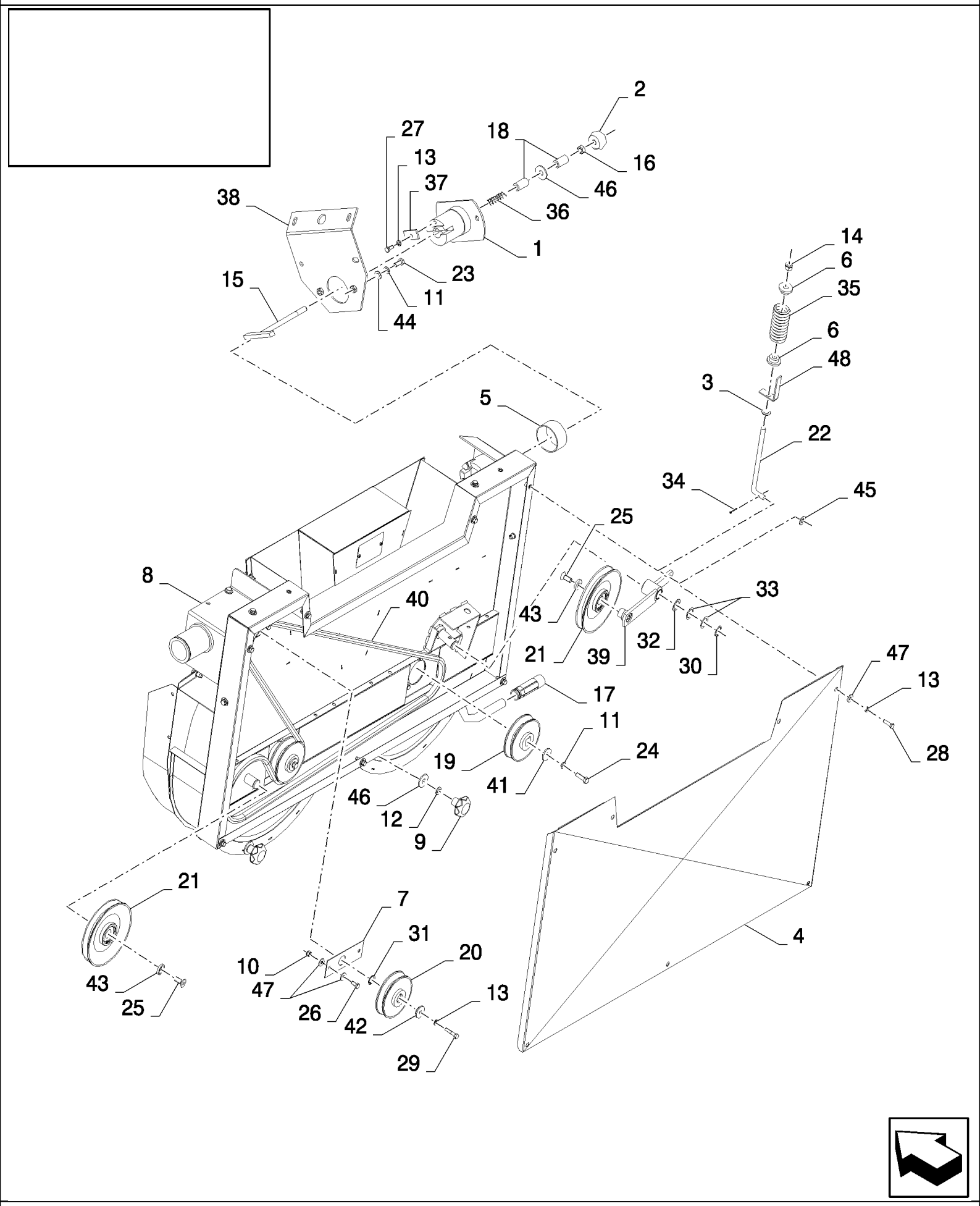

CSX7080 C659 - COMBINE (9/06-8/08)

18.87395583(02) CHAFF SPREADER - REKORD

ссылка	Номер детали	Кол-во	Описание
	87395583		DIA KIT, HARVESTER,
1	84800233	1	SECTOR, TOOTHED,
2	84074787	1	KNOB,
3	84043655	1	WASHER,
4	84800236	1	PLATE,
5	84056131	1	BUSHING,
6	84056165	2	SCREW,
7	84056128	1	PLATE,
8	84800248	1	HOUSING,
9	84800253	2	KNOB,
10	86629542	2	NUT, LOCK, M8 x 1.25, Cl 8,
11	140045	3	WASHER, SPRING, Belleville, M10,
12	84019576	2	WASHER, 12.2MM
13	322358	AR	WASHER, SPRING, Belleville, M8,
14	100038	1	NUT, M12 x 1.75, Cl 8,
15	84056126	1	ROD,
16	9706685	1	NUT, M12, Cl 8,
17	84056140	1	HANDLE, CRANKED,
18	84056127	2	BUSHING,
19	84074791	2	PULLEY,
20	84056120	1	PULLEY,
21	84056124	1	PULLEY,
22	84056165	2	SCREW,
23	11106231	2	BOLT, Hex, M10 x 25, 10.9, Full Thd,
24	43140	2	BOLT, Hex, M10 x 30, 8.8, Full Thd,
25	9837786	2	SCREW, Hex Soc Hd, M12 x 20, 8.8, M12x20
26	16043224	18	BOLT, Hex, M8 x 16, 8.8, Full Thd,
27	120104	1	SCREW, Hex, M8 x 20, 8.8,
28	43127	AR	BOLT, Hex, M8 x 25, 8.8,
29	412479	1	BOLT, Hex, M8 x 35, 8.8,
30	370002	1	RING, SNAP, M25, Ext,
31	84056134	1	CIRCLIP,
32	84074788	1	SHIM, THK. : 1MM
33	84074789	2	SHIM, THK. : 2MM
34	130004	1	PIN, SPLIT (COTTER), M3.2 x 25,
35	84056141	1	SPRING,
36	84074786	1	SPRING,
37	84056151	1	PLATE, COVER,
38	84800255	1	SUPPORT,
39	84800257	1	ARM,
40	84790356	1	BELT, TRANSMISSION,
41	84056153	2	WASHER,
42	84056137	1	WASHER,
43	84056154	2	WASHER,

CSX7080 C659 - COMBINE (9/06-8/08)

18.87395583(02) CHAFF SPREADER - REKORD

ссылка	Номер детали	Кол-во	Описание
44	378244	2	WASHER, M10,
45	140223	1	WASHER, 12.5MM
46	84019577	3	WASHER, 13MM
47	307789	AR	WASHER, 8.4MM
48	87544445	1	INDICATOR,

CSX7080 C659 - COMBINE (9/06-8/08)

18.87395583(03) CHAFF SPREADER ROTORS

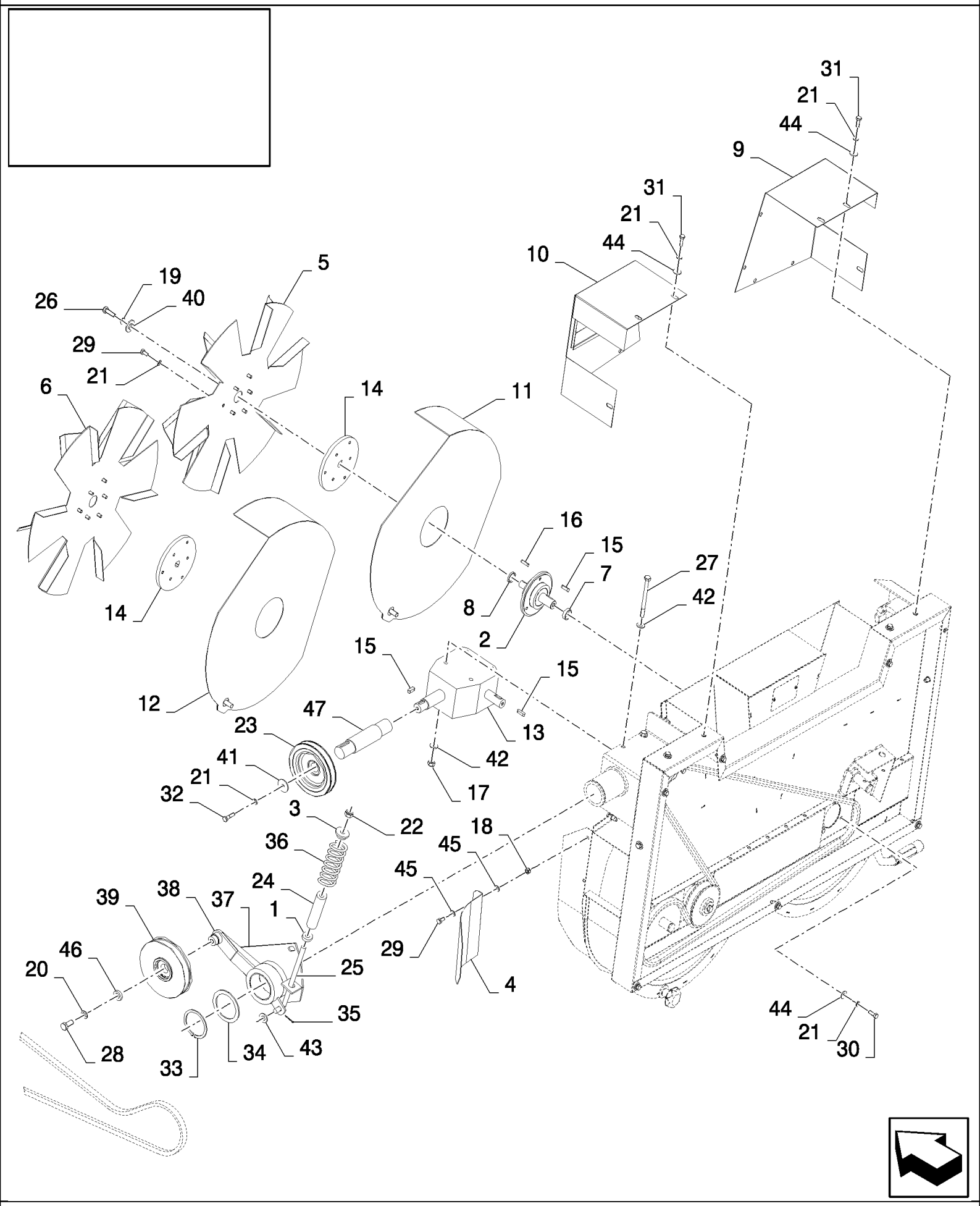

CSX7080 C659 - COMBINE (9/06-8/08)

18.87395583(03) CHAFF SPREADER ROTORS

ссылка	Номер детали	Кол-во	Описание
	87395583		DIA KIT, HARVESTER,
1	84043655	1	WASHER,
2	84800234	2	HUB,
3	84056165	2	SCREW,
4	84800238	2	PLATE,
5	84800240	1	ROTOR,
6	84800242	1	ROTOR,
7	84056129	2	SPACER,
8	84056133	2	SPACER,
9	84800244	1	COVER,
10	84800246	1	COVER,
11	87544438	1	PLATE,
12	87544440	1	PLATE,
13	84056139	1	GEARBOX,
14	84056121	2	HUB,
15	170005	4	KEY,
16	84056144	2	KEY,
17	100037	4	NUT, M10 x 1.5, Cl 8,
18	86629542	4	NUT, LOCK, M8 x 1.25, Cl 8,
19	140045	3	WASHER, SPRING, Belleville, M10,
20	84019576	1	WASHER, 12.2MM
21	322358	AR	WASHER, SPRING, Belleville, M8,
22	100038	1	NUT, M12 x 1.75, Cl 8,
23	84800254	1	PULLEY,
24	87544444	1	INDICATOR,
25	84056165	1	SCREW,
26	43140	2	BOLT, Hex, M10 x 30, 8.8, Full Thd,
27	120118	4	BOLT, Hex, M10 x 120, 8.8, Full Thd,
28	9706687	1	SCREW, Hex, M12 x 30, 8.8,
29	16043224	18	BOLT, Hex, M8 x 16, 8.8, Full Thd,
30	120104	6	SCREW, Hex, M8 x 20, 8.8,
31	43127	AR	BOLT, Hex, M8 x 25, 8.8,
32	300381	1	BOLT, Hex, M8 x 35, 8.8, M8x35
33	300636	1	CIRCLIP, M70, Ext,
34	84056138	1	SHIM, THK. : 3.5MM
35	130004	1	PIN, SPLIT (COTTER), M3.2 x 25,
36	84056141	1	SPRING,
37	84800256	1	SUPPORT,
38	84800258	1	ARM,
39	84056163	1	PULLEY,
40	84056152	2	WASHER,
41	84056137	1	WASHER,
42	378244	8	WASHER, M10,
43	140223	1	WASHER, 12.5MM

CSX7080 C659 - COMBINE (9/06-8/08)

18.87395583(03) CHAFF SPREADER ROTORS

ссылка	Номер детали	Кол-во	Описание
44	307789	AR	WASHER, 8.4MM
45	378243	8	WASHER, M8,
46	84056166	1	WASHER,
47	87544446	1	SHAFT,

CSX7080 C659 - COMBINE (9/06-8/08)

18.87395594(01) STRAWCHOPPER - MANUAL ADJUSTABLE DEFLECTORS

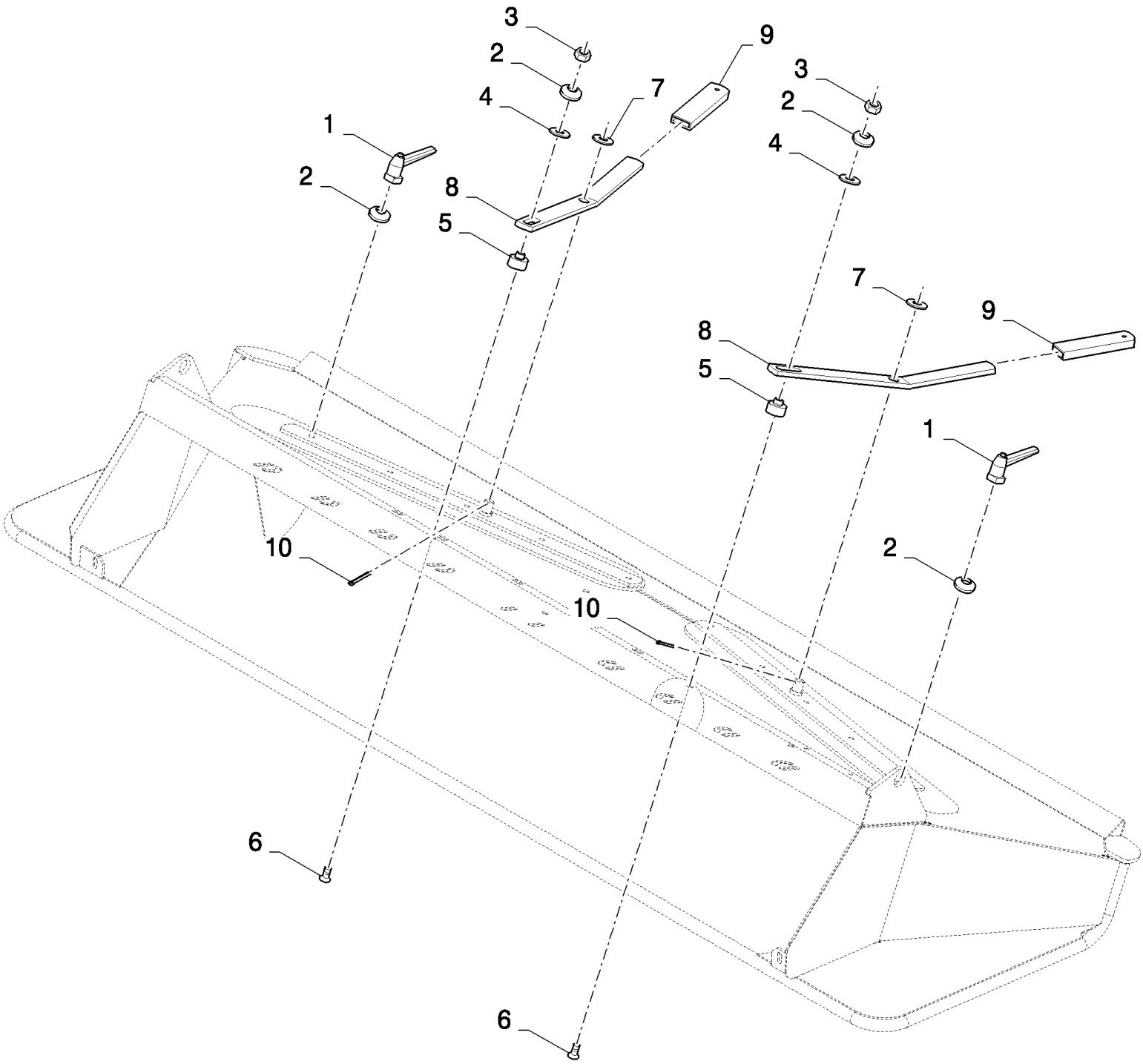

CSX7080 C659 - COMBINE (9/06-8/08)

18.87395594(01) STRAWCHOPPER - MANUAL ADJUSTABLE DEFLECTORS

ссылка	Номер детали	Кол-во	Описание
	87395594		DIA KIT, HARVESTER,
1	84435462	2	HANDLE,
2	322358	4	WASHER, SPRING, Belleville, M8,
3	9706690	2	NUT, M8, Cl 8,
4	140041	2	WASHER, M8 x 28 x 3,
5	84434297	2	BUSHING,
6	84069530	2	SCREW, Hex Soc Flat Hd, M8 x 40, 8.8,
7	378246	2	WASHER, 16MM
8	84435478	2	LEVER,
9	84439164	2	HANDLE GRIP,
10	130004	2	PIN, SPLIT (COTTER), M3.2 x 25,

18.87395594(02) STRAWCHOPPER - MANUAL ADJUSTABLE DEFLECTORS

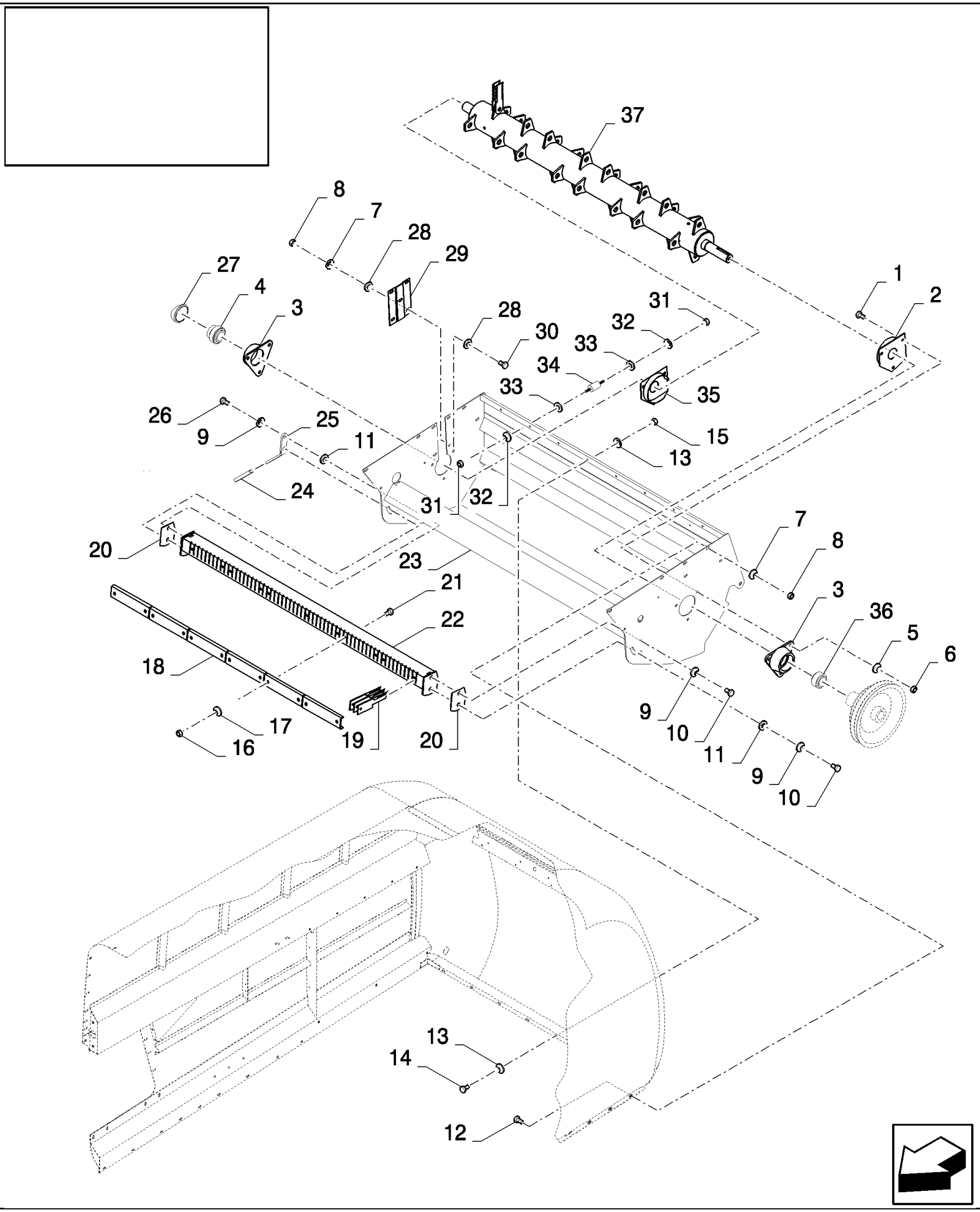

CSX7080 C659 - COMBINE (9/06-8/08)

18.87395594(02) STRAWCHOPPER - MANUAL ADJUSTABLE DEFLECTORS

ссылка	Номер детали	Кол-во	Описание
	87395594		DIA KIT, HARVESTER,
1	300389	6	BOLT, Hex, M12 x 35, 8.8, Full Thd,
2	84434806	1	GUARD,
3	84334208	2	HOUSING, BEARING,
4	385424	1	BEARING ASSY,
5	140046	6	WASHER, Belleville, M12,
6	9706685	6	NUT, M12, Cl 8,
7	140045	9	WASHER, SPRING, Belleville, M10,
8	100016	9	NUT, M10, Cl 8,
9	140048	4	WASHER, SPRING, Belleville, M16,
10	43167	2	BOLT, Hex, M16 x 30, 8.8, Full Thd,
11	140020	3	WASHER, M16 x 30 x 3,
12	338949	7	BOLT, CARRIAGE, Short NK, M10 x 25, Cl8.8, Full Thd,
13	322358	16	WASHER, SPRING, Belleville, M8,
14	120104	8	SCREW, Hex, M8 x 20, 8.8,
15	9706690	8	NUT, M8, Cl 8,
16	86629542	12	NUT, LOCK, M8 x 1.25, Cl 8,
17	140041	12	WASHER, M8 x 28 x 3,
18	84434026	6	RETAINER,
19	9516450	60	KNIFE,
20	84434200	3	SHIM,
21	86528166	12	BOLT, Hex, M8 x 120, 8.8, M8x120
22	84440064	1	SUPPORT,
23	87373172	1	FRAME,
24	84439164	1	HANDLE GRIP,
25	84434209	1	LEVER,
26	43168	2	BOLT, Hex, M16 x 40, 8.8,
27	137395	1	DUST CAP,
28	140042	4	WASHER, M10 x 34 x 3,
29	84440375	1	PLATE,
30	43139	2	SCREW, Hex, M10 x 25, 8.8, Full Thd, M10x25
31	9706755	8	NUT, M6, Cl 8,
32	322357	8	WASHER, SPRING, Belleville, M6,
33	448516	8	SPACER,
34	9513734	4	SILENTBLOC,
35	84434825	1	GUARD,
36	84453848	1	BEARING, BALL,
37	84079088	1	ROTOR,
	400972	0.05	grease
	86503661	0.05	GREASE, grease

CSX7080 C659 - COMBINE (9/06-8/08)

18.87395594(03) STRAWCHOPPER - MANUAL ADJUSTABLE DEFLECTORS

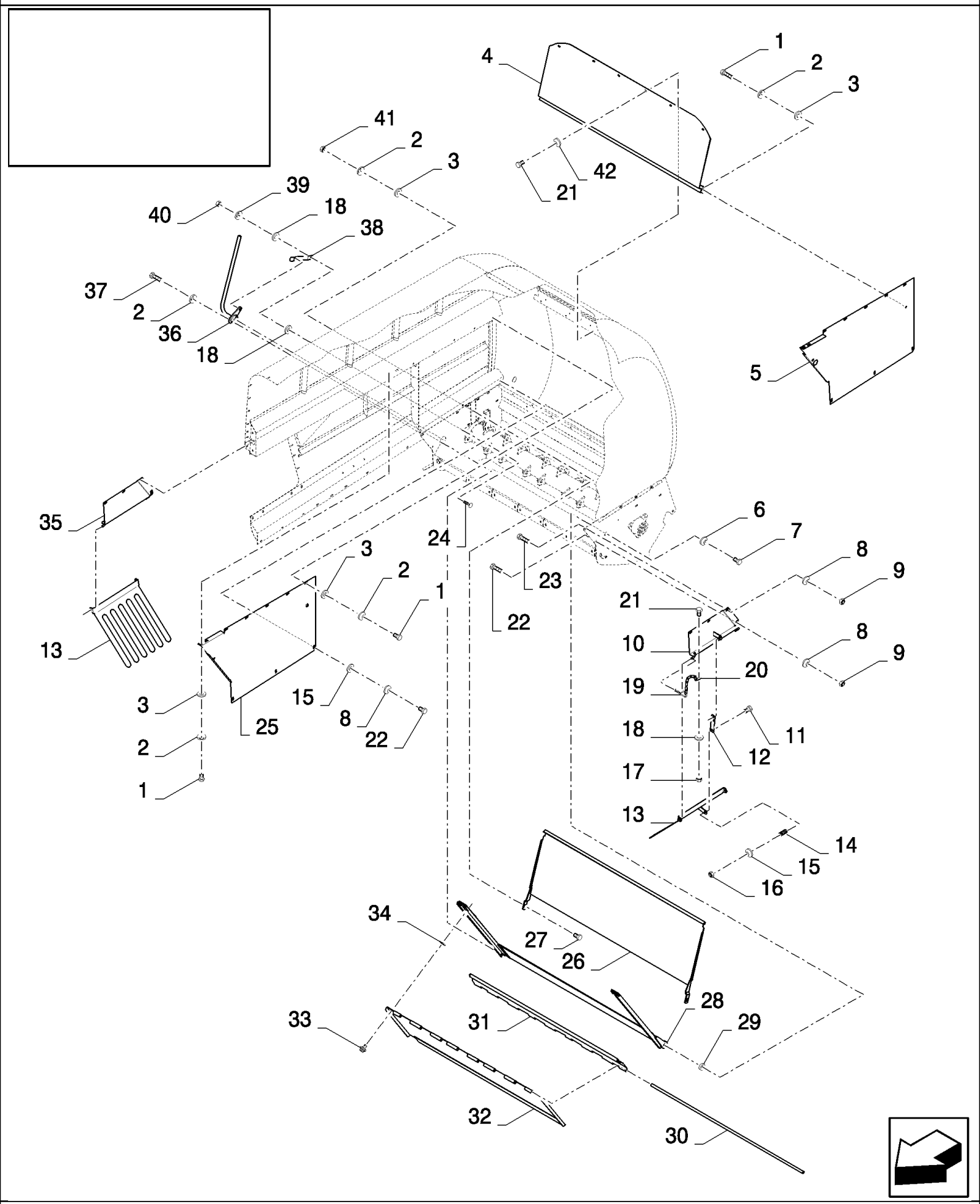

CSX7080 C659 - COMBINE (9/06-8/08)

18.87395594(03) STRAWCHOPPER - MANUAL ADJUSTABLE DEFLECTORS

ссылка	Номер детали	Кол-во	Описание
	87395594		DIA KIT, HARVESTER,
1	120104	16	SCREW, Hex, M8 x 20, 8.8,
2	322358	20	WASHER, SPRING, Belleville, M8,
3	140041	18	WASHER, M8 x 28 x 3,
4	84434841	1	DEFLECTOR,
5	84434246	1	PLATE,
6	140048	1	WASHER, SPRING, Belleville, M16,
7	43167	1	BOLT, Hex, M16 x 30, 8.8, Full Thd,
8	140045	14	WASHER, SPRING, Belleville, M10,
9	100016	8	NUT, M10, Cl 8,
10	84433778	1	SUPPORT,
11	325829	2	BOLT, Hex, M10 x 45, 8.8, M10x45
12	84434208	2	BRACKET,
13	84433715	2	RAKE,
14	180072	2	SPRING,
15	140017	8	WASHER, M10 x 20 x 2,
16	100037	2	NUT, M10 x 1.5, Cl 8,
17	9706755	2	NUT, M6, Cl 8,
18	9824259	4	WASHER, M6 x 12 x 1.6,
19	370539	2	PIN, SPLIT (COTTER),
20	89839041	2	CHAIN,
21	86508568	8	SCREW, Hex, M6 x 16, 8.8,
22	43138	8	SCREW, Hex, M10 x 20, 8.8, Full Thd,
23	338949	6	BOLT, CARRIAGE, Short NK, M10 x 25, Cl8.8, Full Thd,
24	374891	1	BOLT, CARRIAGE, Short NK, M6 x 25, Cl8.8, Full Thd,
25	84434345	1	PLATE,
26	84434844	1	DEFLECTOR,
27	120038	2	BOLT, CARRIAGE, Short NK, M8 x 30, Cl8.8, Full Thd,
28	84439336	1	DEFLECTOR,
29	84444700	1	BUSHING,
30	84439312	1	TUBE,
31	84441462	1	DEFLECTOR,
32	84439346	1	DEFLECTOR,
33	89514603	2	LOCK,
34	9514605	2	WASHER,
35	84433929	1	SUPPORT,
36	84434503	1	LEVER,
37	43128	2	BOLT, Hex, M8 x 30, 8.8,
38	84440371	1	CLIP,
39	322357	1	WASHER, SPRING, Belleville, M6,
40	353308	1	NUT, M6 x 1, Cl 8,
41	9706690	2	NUT, M8, Cl 8,
42	412649	6	WASHER, SPRING, Belleville, M6,

CSX7080 C659 - COMBINE (9/06-8/08)

18.87395594(04) STRAWCHOPPER - MANUAL ADJUSTABLE DEFLECTORS

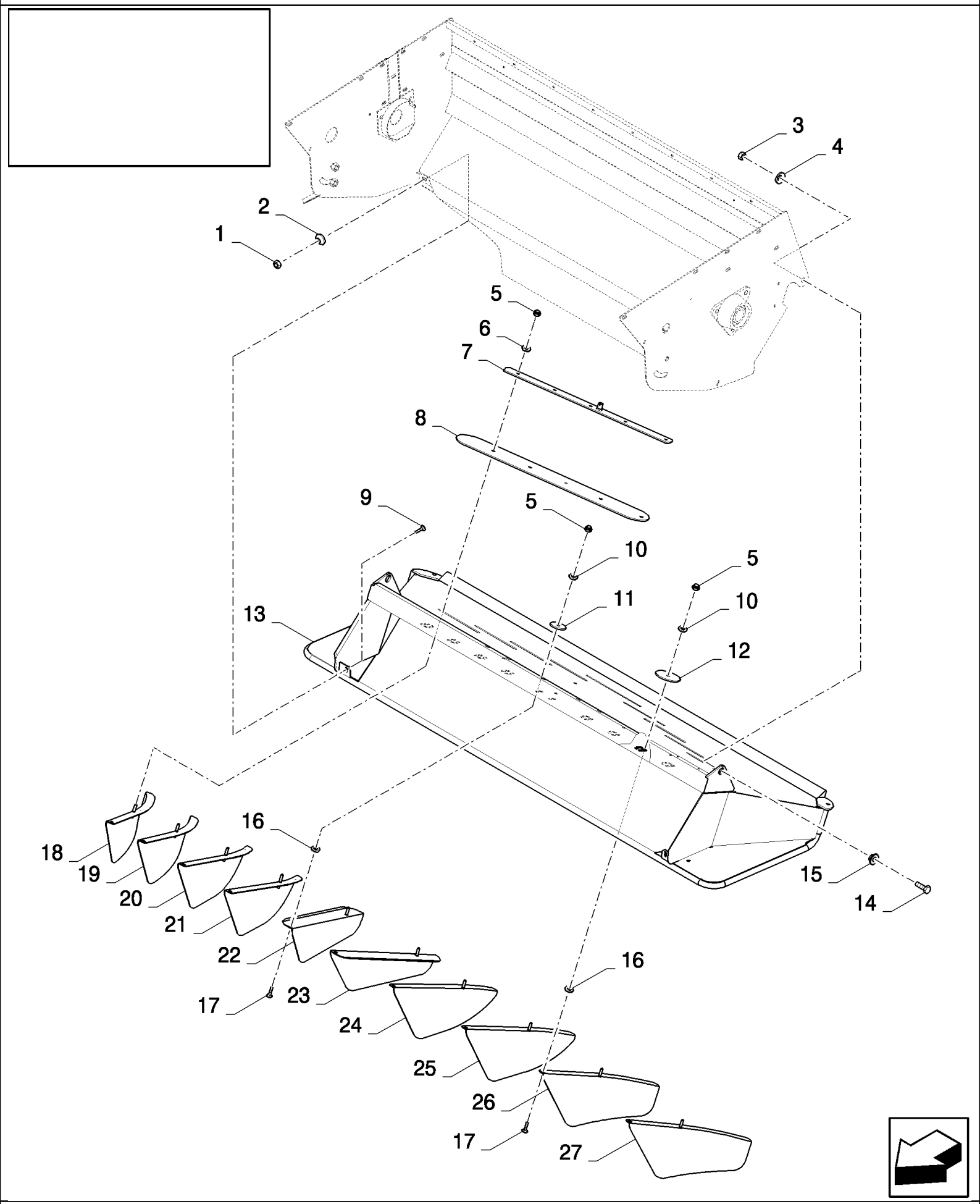

CSX7080 C659 - COMBINE (9/06-8/08)

18.87395594(04) STRAWCHOPPER - MANUAL ADJUSTABLE DEFLECTORS

ссылка	Номер детали	Кол-во	Описание
	87395594		DIA KIT, HARVESTER,
1	9706690	2	NUT, M8, Cl 8,
2	412650	2	WASHER, Belleville, M8,
3	100020	2	NUT, M16, Cl 8,
4	140048	2	WASHER, SPRING, Belleville, M16,
5	86629542	20	NUT, LOCK, M8 x 1.25, Cl 8,
6	140016	10	WASHER, M8 x 16 x 1.6,
7	84435482	2	PAD, SLIDING,
8	84065131	2	PAD, SLIDING,
9	86507486	2	BOLT, CARRIAGE, Short NK, M8 x 20, Cl8.8, Full Thd,
10	140041	10	WASHER, M8 x 28 x 3,
11	84435270	2	WASHER,
12	84435269	8	WASHER,
13	84434285	1	FRAME,
14	120090	2	SCREW, Hex, M16 x 50, 8.8,
15	84435443	2	BUSHING,
16	747812	10	WASHER, 15MM
17	308761	10	BOLT, CARRIAGE, Short NK, M8 x 25, Cl8.8, Full Thd,
18	84454358	1	DEFLECTOR,
19	84454361	1	DEFLECTOR,
20	84454363	1	DEFLECTOR,
21	84454365	1	DEFLECTOR,
22	84435316	1	DEFLECTOR,
23	84435322	1	DEFLECTOR,
24	84454366	1	DEFLECTOR,
25	84454367	1	DEFLECTOR,
26	84454369	1	DEFLECTOR,
27	84454370	1	DEFLECTOR,
	84004739	2	DECAL,

CSX7080 C659 - COMBINE (9/06-8/08)

18.87395594(05) STRAWCHOPPER - MANUAL ADJUSTABLE DEFLECTORS

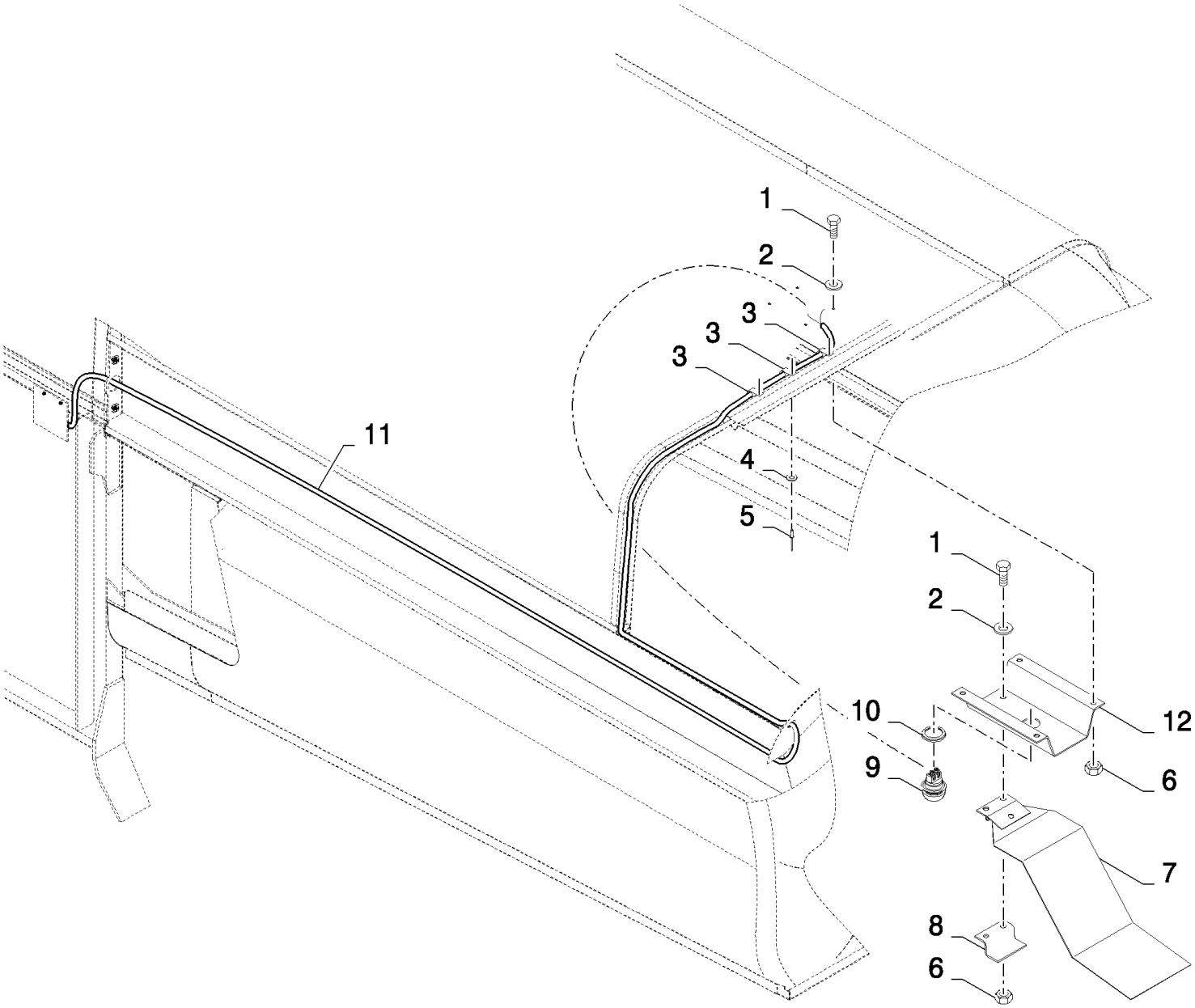

CSX7080 C659 - COMBINE (9/06-8/08)

18.87395594(05) STRAWCHOPPER - MANUAL ADJUSTABLE DEFLECTORS

ссылка	Номер детали	Кол-во	Описание
	87395594		DIA KIT, HARVESTER,
1	86508568	6	SCREW, Hex, M6 x 16, 8.8,
2	322357	6	WASHER, SPRING, Belleville, M6,
3	9507807	3	CLAMP,
4	322356	3	WASHER, 5MM
5	9512289	3	Rivet
6	9706755	6	NUT, M6, Cl 8,
7	417790	1	SUPPORT,
8	417793	1	SUPPORT,
9	335378	1	SWITCH,
10	397986	1	CUP,
11	84437313	1	HARNESS, WIRE,
12	417792	1	SUPPORT,

CSX7080 C659 - COMBINE (9/06-8/08)

18.87395594(06) STRAWCHOPPER - MANUAL ADJUSTABLE DEFLECTORS

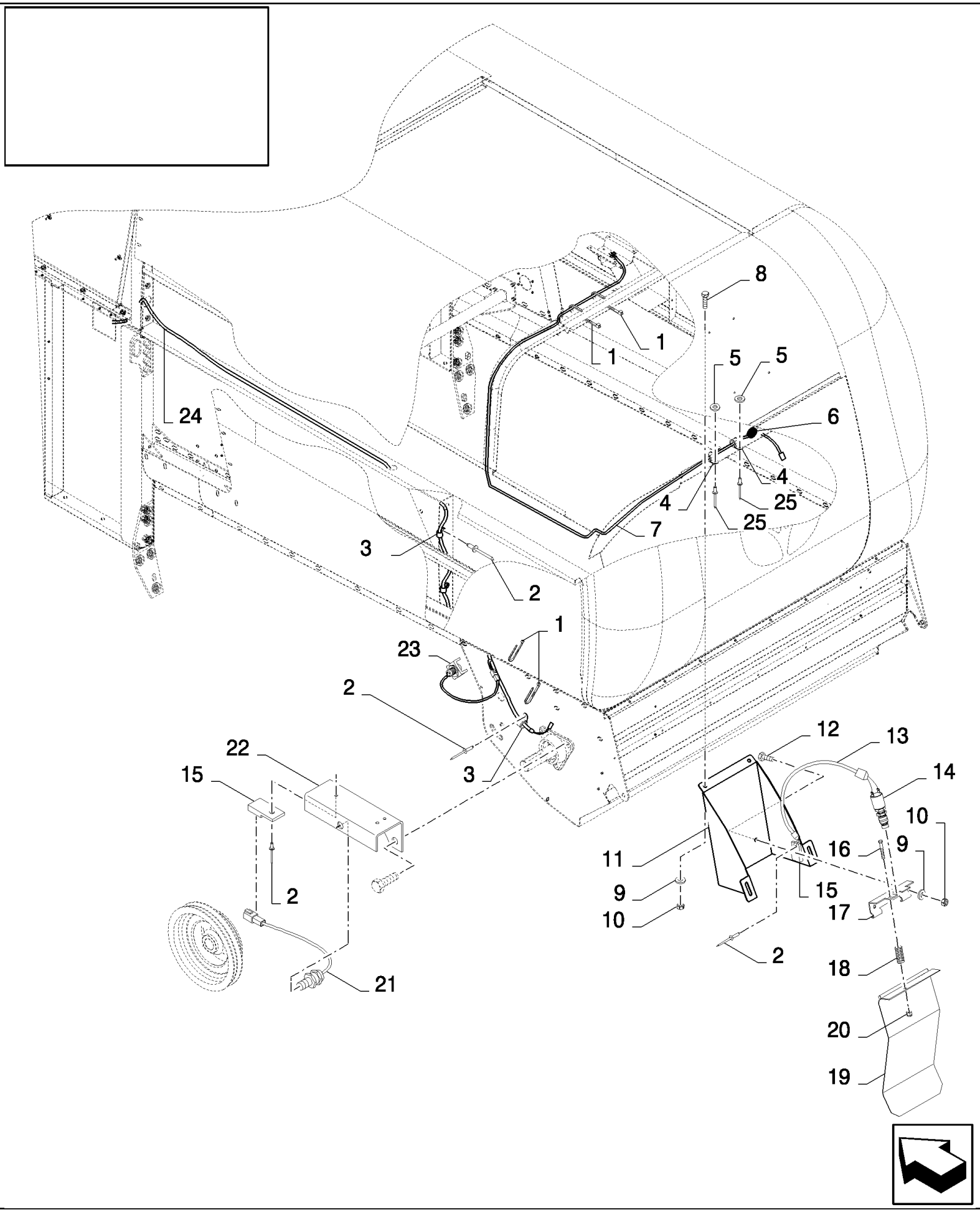

CSX7080 C659 - COMBINE (9/06-8/08)

18.87395594(06) STRAWCHOPPER - MANUAL ADJUSTABLE DEFLECTORS

ссылка	Номер детали	Кол-во	Описание
	87395594		DIA KIT, HARVESTER,
1	89993154	3	CLAMP,
2	445394	2	RIVET, Pop, M4.8 x 12.7,
3	84818441	3	CLAMP,
4	9507807	2	CLAMP,
5	322356	2	WASHER, 5MM
6	307016	1	FITTING, PIPE,
7	84437319	1	HARNESS, WIRE,
8	86512439	4	SCREW, Short NK, M6 x 16, Cl8.8, Full Thd,
9	322357	6	WASHER, SPRING, Belleville, M6,
10	9706755	6	NUT, M6, Cl 8,
11	84441249	1	SUPPORT,
12	86508568	2	SCREW, Hex, M6 x 16, 8.8,
13	84441663	1	HARNESS, WIRE,
14	89818685	1	SWITCH,
15	84058832	2	CLIP,
16	120056	1	SCREW, Hex, M6 x 50, 8.8,
17	84015986	1	HINGE,
18	84005450	1	SPRING,
19	84015983	1	PLATE, COVER,
20	353308	1	NUT, M6 x 1, Cl 8,
21	84058861	1	SENSOR,
22	84444723	1	BRACKET,
23	84058860	1	SENSOR,
24	84444962	1	HARNESS, WIRE,
25	9512290	5	RIVET,
26	9512968	3	RIVET,
27	129959	2	GROMMET,
28	84439603	1	SUPPORT,

18.87395594(07) STRAWCHOPPER - MANUAL ADJUSTABLE DEFLECTORS

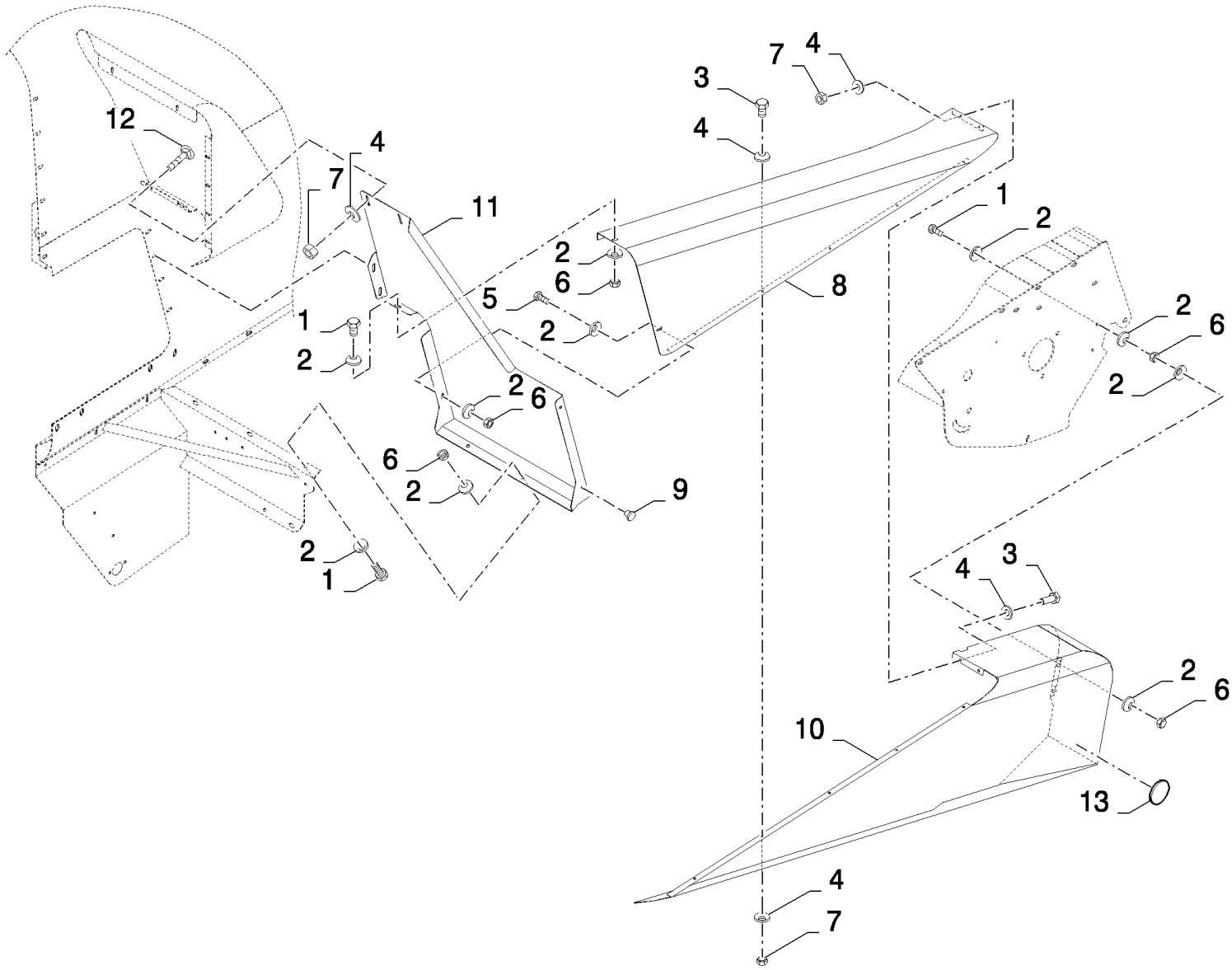

CSX7080 C659 - COMBINE (9/06-8/08)

18.87395594(07) STRAWCHOPPER - MANUAL ADJUSTABLE DEFLECTORS

ссылка	Номер детали	Кол-во	Описание
	87395594		DIA KIT, HARVESTER,
1	43127	5	BOLT, Hex, M8 x 25, 8.8,
2	412650	16	WASHER, Belleville, M8,
3	86508568	7	SCREW, Hex, M6 x 16, 8.8,
4	322357	16	WASHER, SPRING, Belleville, M6,
5	120104	1	SCREW, Hex, M8 x 20, 8.8,
6	9706690	8	NUT, M8, Cl 8,
7	9706755	9	NUT, M6, Cl 8,
8	87353141	1	SHIELD,
9	331233	2	PLUG,
10	84434189	1	SHIELD,
11	87353138	1	SHIELD,
12	9706703	2	BOLT, CARRIAGE, Short NK, M6 x 20, Cl8.8, Full Thd,
13	435895	2	REFLECTOR,

CSX7080 C659 - COMBINE (9/06-8/08)

18.87395594(08) STRAWCHOPPER - MANUAL ADJUSTABLE DEFLECTORS

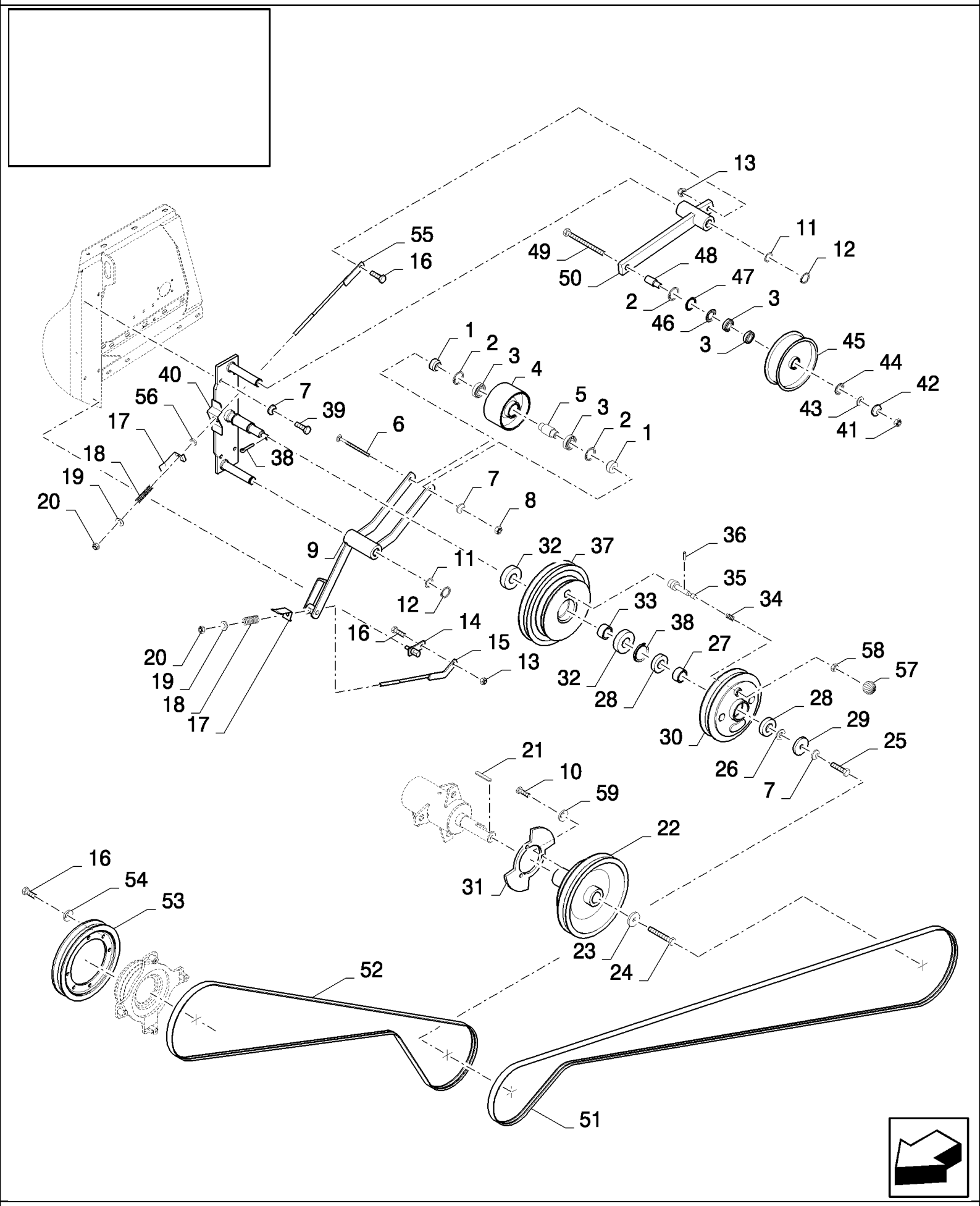

CSX7080 C659 - COMBINE (9/06-8/08)

18.87395594(08) STRAWCHOPPER - MANUAL ADJUSTABLE DEFLECTORS

ссылка	Номер детали	Кол-во	Описание
	87395594		DIA KIT, HARVESTER,
1	84076275	2	BUSHING,
2	370011	3	RING, SNAP, M52, Int,
3	443898	4	BEARING, BALL,
4	84334348	1	PULLEY,
5	84076197	1	BUSHING,
6	84053391	1	BOLT, CARRIAGE, Short NK, M12 x 130, Cl8.8,
7	140046	6	WASHER, Belleville, M12,
8	9706685	1	NUT, M12, Cl 8,
9	84076317	1	LEVER, (10)
10	120100	3	BOLT, Hex, M6 x 20, 8.8,
11	84000011	2	WASHER, 30MM
12	370003	2	RING, SNAP, M30, Ext,
13	100037	2	NUT, M10 x 1.5, Cl 8,
14	84431514	1	HINGE,
15	84431503	1	ROD,
16	43139	8	SCREW, Hex, M10 x 25, 8.8, Full Thd, M10x25
17	84431388	2	INDICATOR,
18	84814910	2	SPRING,
19	378245	2	WASHER, M12,
20	412126	2	NUT, LOCK, M12 x 1.75, Cl 8,
21	412341	1	KEY,
22	84441435	1	PULLEY,
23	440997	1	WASHER, 17MM
24	385922	1	SCREW, Hex, M16 x 45, 8.8,
25	9706687	1	SCREW, Hex, M12 x 30, 8.8, M16x1.5
26	327084	1	WASHER,
27	84441521	2	SPACER,
28	913716	2	BEARING, BALL,
29	84441824	1	RING,
30	84453029	1	PULLEY,
31	84444721	1	DISC,
32	210086	2	BEARING ASSY,
33	84441520	1	SPACER,
34	26538	1	SPRING,
35	84444511	1	PIN,
36	130078	1	PIN, LOCK, M4 x 30, Slotted,
37	84441441	1	PULLEY,
38	84441806	1	RING,
39	300389	4	BOLT, Hex, M12 x 35, 8.8, Full Thd,
40	84441790	1	SUPPORT,
41	100020	1	NUT, M16, Cl 8,
42	140048	1	WASHER, SPRING, Belleville, M16,
43	84440599	1	WASHER,

CSX7080 C659 - COMBINE (9/06-8/08)

18.87395594(08) STRAWCHOPPER - MANUAL ADJUSTABLE DEFLECTORS

ссылка	Номер детали	Кол-во	Описание
44	390515	1	RING,
45	84440508	1	WHEEL, IDLER,
46	391120	1	ELEMENT, SEALING,
47	84991773	1	SHIM,
48	84440601	1	BUSHING,
49	321246	1	BOLT, Hex, M16 x 120, 8.8,
50	84076270	1	LEVER, (10)
51	84076421	1	BELT, TRANSMISSION,
52	84075955	1	BELT, TRANSMISSION,
53	84980735	1	PULLEY,
54	140045	6	WASHER, SPRING, Belleville, M10,
55	84431940	1	ROD,
56	439857	1	BUSHING,
57	84453022	1	BUTTON,
58	100016	1	NUT, M10, Cl 8,
59	322357	3	WASHER, SPRING, Belleville, M6,
	86557091	0.01	LOCK,
	86503661	0.04	GREASE, grease

18.87526036(01) HEATING - CAB

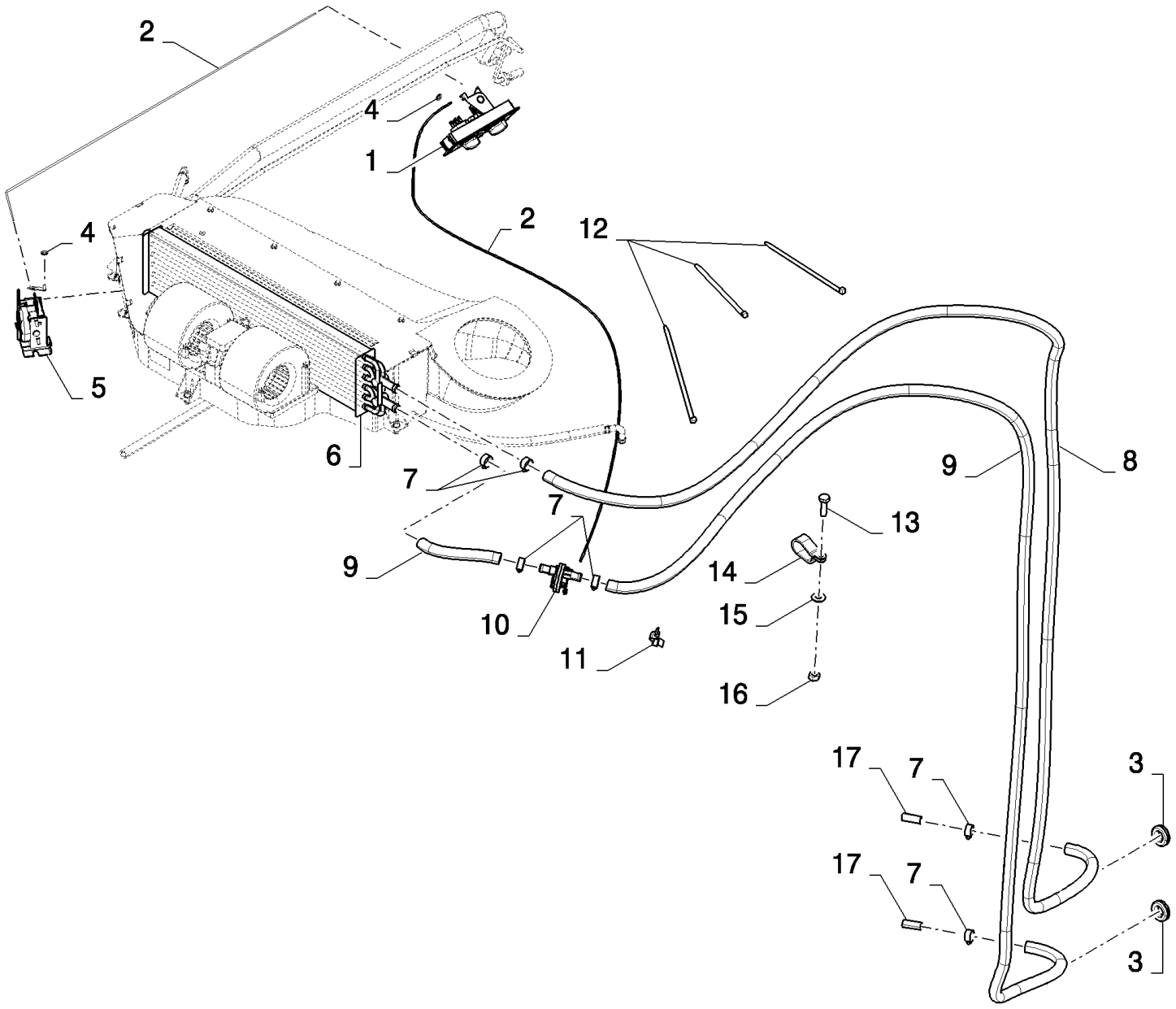

CSX7080 C659 - COMBINE (9/06-8/08)

18.87526036(01) HEATING - CAB

ссылка	Номер детали	Кол-во	Описание
	87526036		DIA KIT, HARVESTER,
1	87354648	1	PANEL, INSTRUMENTS,
2	87383765	1	CABLE,
3	173011	2	GROMMET,
4	84819630	1	WASHER,
5	84814477	1	SWITCH, THERMOGUARD,
6	84814478	1	COIL,
7	326082	6	CLAMP,
8	84607279	1	HOSE, L=3.2M
9	84607280	1	HOSE, L=3.2M
10	84607110	1	CONNECTOR, WIRE,
11	84807149	1	CLIP,
12	368582	3	STRAP,
13	120100	1	BOLT, Hex, M6 x 20, 8.8,
14	9513271	1	CLAMP,
15	322357	1	WASHER, SPRING, Belleville, M6,
16	9706755	1	NUT, M6, Cl 8,
17	9994350	2	CONNECTOR, ELEC,

18.87526036(02) HEATING - CAB

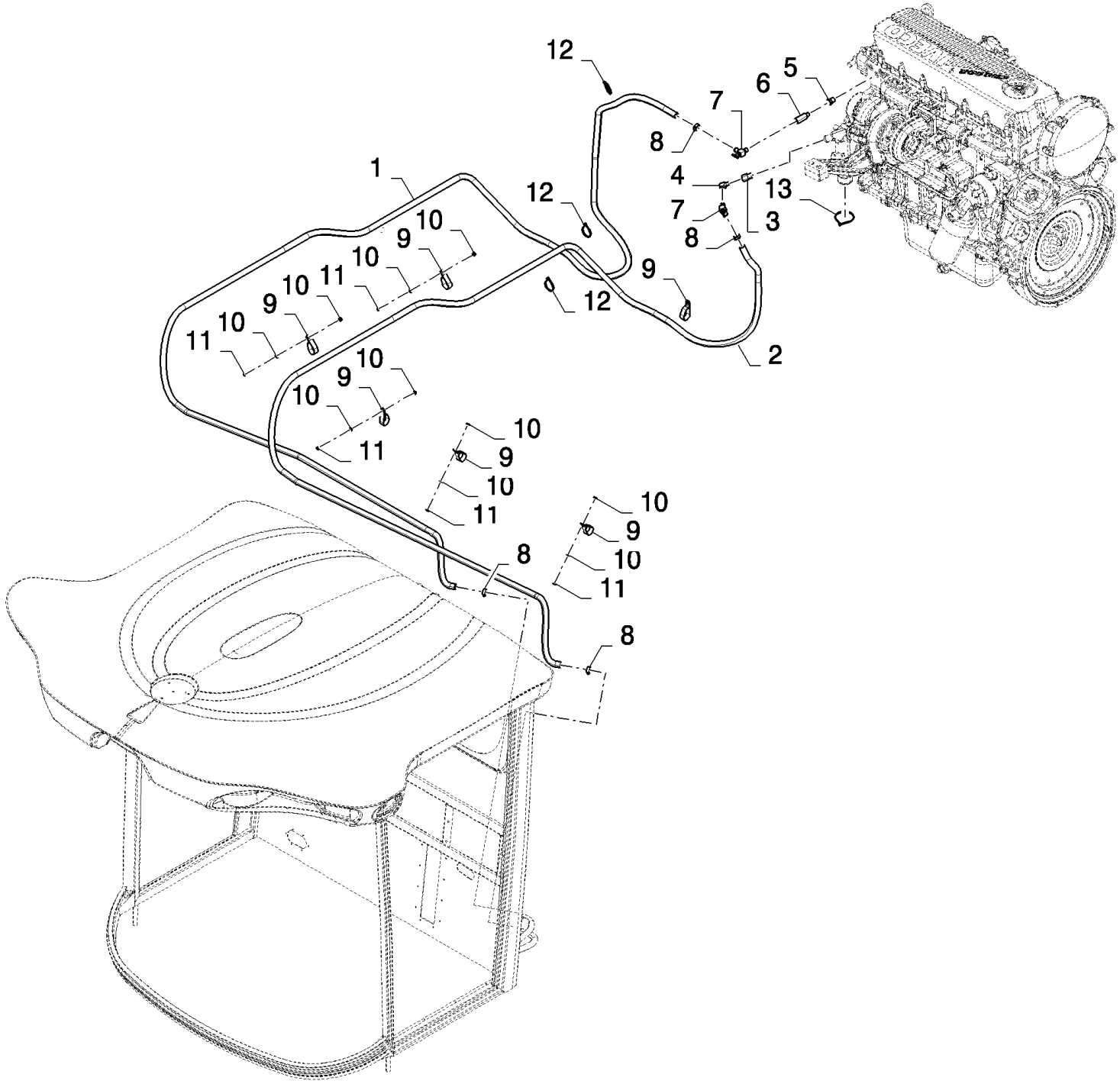

CSX7080 C659 - COMBINE (9/06-8/08)

18.87526036(02) HEATING - CAB

ссылка	Номер детали	Кол-во	Описание
	87526036		DIA KIT, HARVESTER,
1	84607279	1	HOSE, L=6.5M
2	84607280	1	HOSE, L=5M
3	84334474	1	FITTING,
4	83961127	1	ELBOW,
5	87016923	1	REDUCER, 1/2"-14 NPTF x 3/8"-18 Fem NPTF,
6	84012391	1	JOINT, UNIVERSAL,
7	83961305	2	VALVE, SHUT-OFF,
8	326082	4	CLAMP,
9	9513271	6	CLAMP,
10	322357	10	WASHER, SPRING, Belleville, M6,
11	9706755	5	NUT, M6, Cl 8,
12	86566989	4	STRAP, CABLE,
13	86566990	1	STRAP, CABLE,

CSX7080 C659 - COMBINE (9/06-8/08)

18.87554927(01) REEL - HYDRAULIC REBUILD KIT

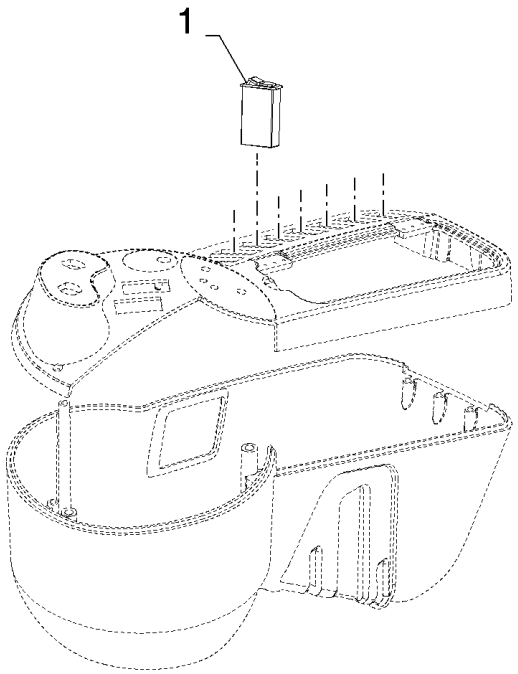

CSX7080 C659 - COMBINE (9/06-8/08)

18.87554927(01) REEL - HYDRAULIC REBUILD KIT

ссылка	Номер детали	Кол-во	Описание
	87554927		DIA KIT, HARVESTER,
1	87378253	1	SWITCH, Feeder variator

CSX7080 C659 - COMBINE (9/06-8/08)

18.87554927(02) REEL - HYDRAULIC REBUILD KIT

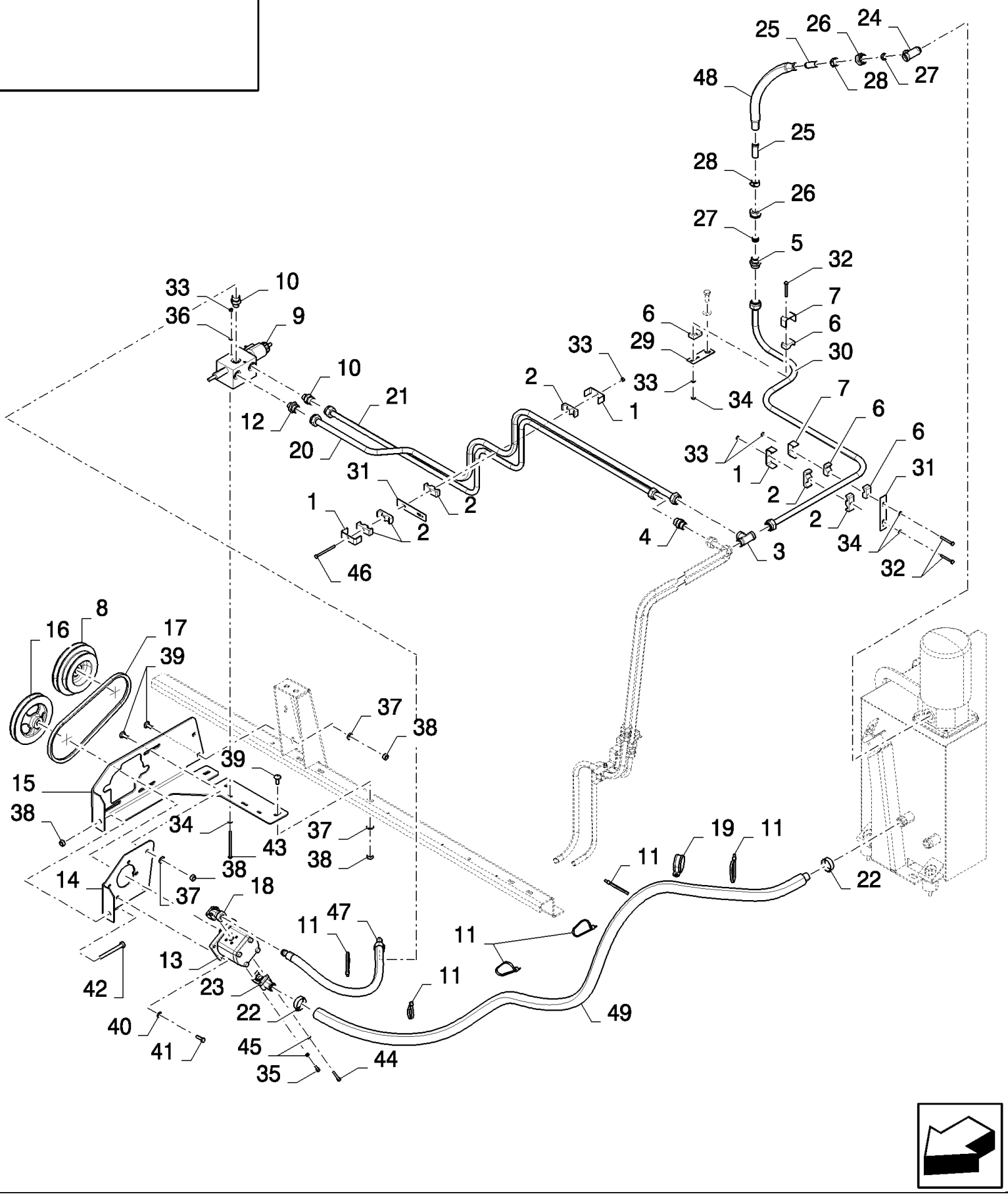

CSX7080 C659 - COMBINE (9/06-8/08)

18.87554927(02) REEL - HYDRAULIC REBUILD KIT

ссылка	Номер детали	Кол-во	Описание
	87554927		DIA KIT, HARVESTER,
1	84814948	3	SUPPORT,
2	430356	6	CLAMP,
3	379431	1	CONNECTION, 3 WAY,
4	335174	1	CONNECTOR, HYD.,
5	335173	1	CONNECTOR, HYD.,
6	433007	4	CLAMP,
7	433100	2	SUPPORT,
8	87323482	1	PULLEY,
9	84444581	1	VALVE, HYDRAULIC,
10	394372	2	CONNECTOR, HYD.,
11	396718	6	STRAP,
12	394373	1	CONNECTOR, HYD.,
13	87340938	1	PUMP, HYDRAULIC,
14	87324033	1	BRACKET,
15	87324306	1	SUPPORT,
16	87324411	1	PULLEY,
17	80754165	1	BELT, TRANSMISSION,
18	337208	1	ELBOW,
19	455556	1	CLAMP,
20	87364728	1	TUBE, HYD,
21	87389989	1	TUBE, HYD,
22	382527	2	CLAMP, HOSE,
23	450594	1	ELBOW,
24	84042442	1	CONNECTION, 3 WAY,
25	84012346	2	TUBE,
26	335170	2	NUT,
27	335168	2	FERRULE,
28	326082	2	CLAMP,
29	84007699	1	PLATE, COVER,
30	87364730	1	TUBE, HYD,
31	919316	2	SUPPORT,
32	120056	3	SCREW, Hex, M6 x 50, 8.8,
33	9706755	6	NUT, M6, Cl 8,
34	86588450	5	WASHER, M6,
35	120229	2	SCREW, Hex Soc Hd, M6 x 20, 8.8,
36	322357	2	WASHER, SPRING, Belleville, M6,
37	140045	8	WASHER, SPRING, Belleville, M10,
38	100016	10	NUT, M10, Cl 8,
39	86633356	8	BOLT, CARRIAGE, Short NK, M10 x 25, Cl8.8, Full Thd,
40	322358	4	WASHER, SPRING, Belleville, M8,
41	43127	4	BOLT, Hex, M8 x 25, 8.8,
42	360296	1	BOLT, Hex, M10 x 100, 8.8, Full Thd,
43	412499	2	BOLT, Hex, M6 x 100, 8.8, Full Thd,

CSX7080 C659 - COMBINE (9/06-8/08)

18.87554927(02) REEL - HYDRAULIC REBUILD KIT

ссылка	Номер детали	Кол-во	Описание
44	356464	2	SCREW,
45	140044	4	WASHER,
46	86508570	1	SCREW, Hex, M6 x 80, 8.8,
47	9815904	1	SLEEVE,
48	451557	1	HOSE,
49	84014799	1	HOSE,

CSX7080 C659 - COMBINE (9/06-8/08)

18.87554927(03) REEL - HYDRAULIC REBUILD KIT

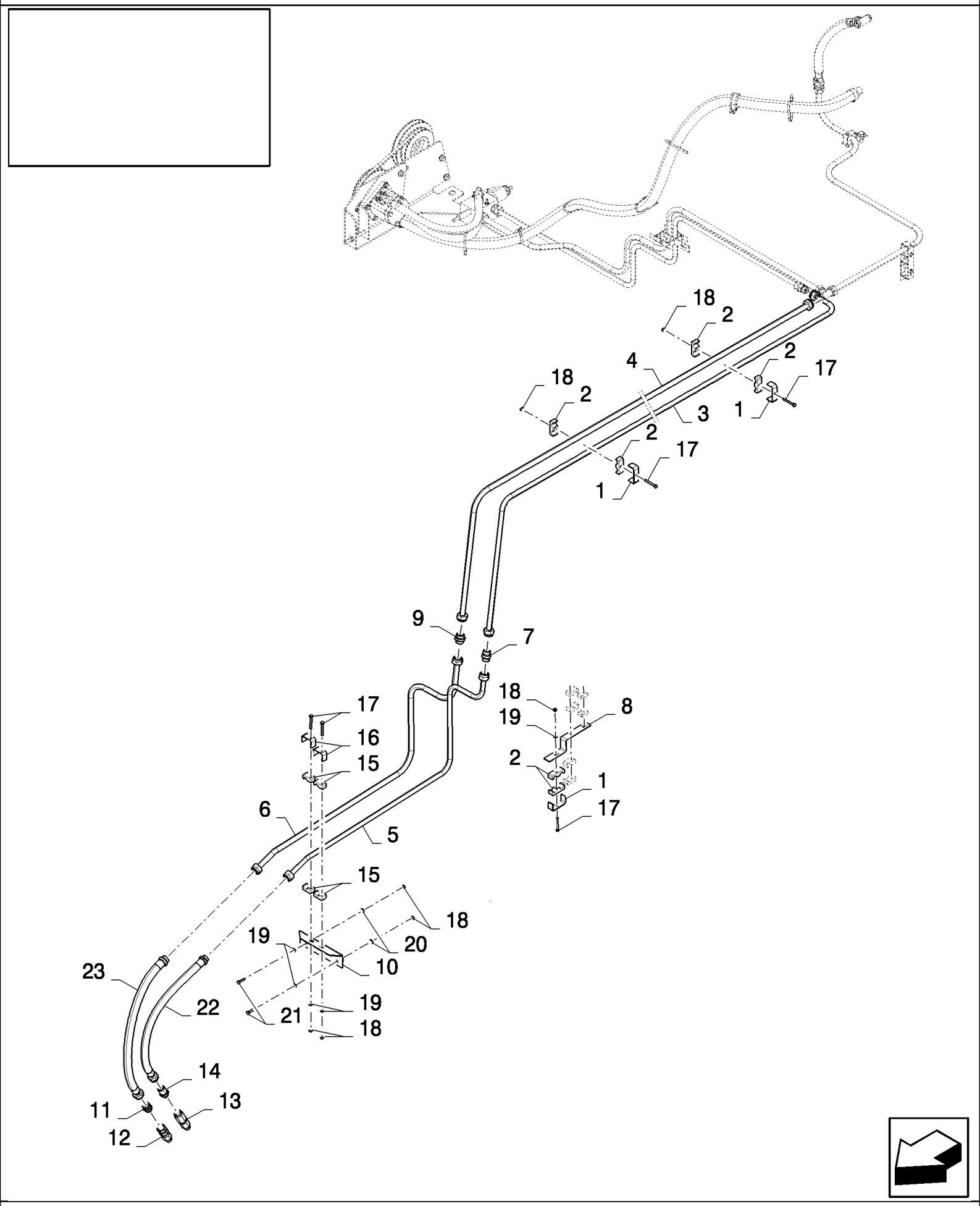

CSX7080 C659 - COMBINE (9/06-8/08)

18.87554927(03) REEL - HYDRAULIC REBUILD KIT

ссылка	Номер детали	Кол-во	Описание
	87554927		DIA KIT, HARVESTER,
1	84814948	3	SUPPORT,
2	430356	6	CLAMP,
3	87389995	1	TUBE, HYD,
4	87364734	1	TUBE, HYD,
5	87389999	1	TUBE, HYD,
6	87389997	1	TUBE, HYD,
7	335174	1	CONNECTOR, HYD.,
8	87388987	1	BRACKET,
9	335173	1	CONNECTOR, HYD.,
10	84447753	1	BRACKET,
11	84437854	1	CONNECTOR, HYD.,
12	84435503	1	CONNECTOR, HYD., (24)
13	84435502	1	CONNECTOR, HYD., (24)
14	9513143	1	CONNECTOR, HYD.,
15	433007	4	CLAMP,
16	433100	2	SUPPORT,
17	120056	5	SCREW, Hex, M6 x 50, 8.8,
18	9706755	7	NUT, M6, Cl 8,
19	86588450	5	WASHER, M6,
20	322357	2	WASHER, SPRING, Belleville, M6,
21	86977786	2	BOLT, Hex, M6 x 25, 8.8,
22	84433549	1	HOSE, FLEXIBLE,
23	84433494	1	HOSE, FLEXIBLE,
	760784	0.01	oil

ATTACHMENTS	ACCESSOIRES	ACCESORIO	UDSTYR
ACCESSORIO	ZUBEHÖR	EQUIPAMENTOS	HULPSTUKKEN

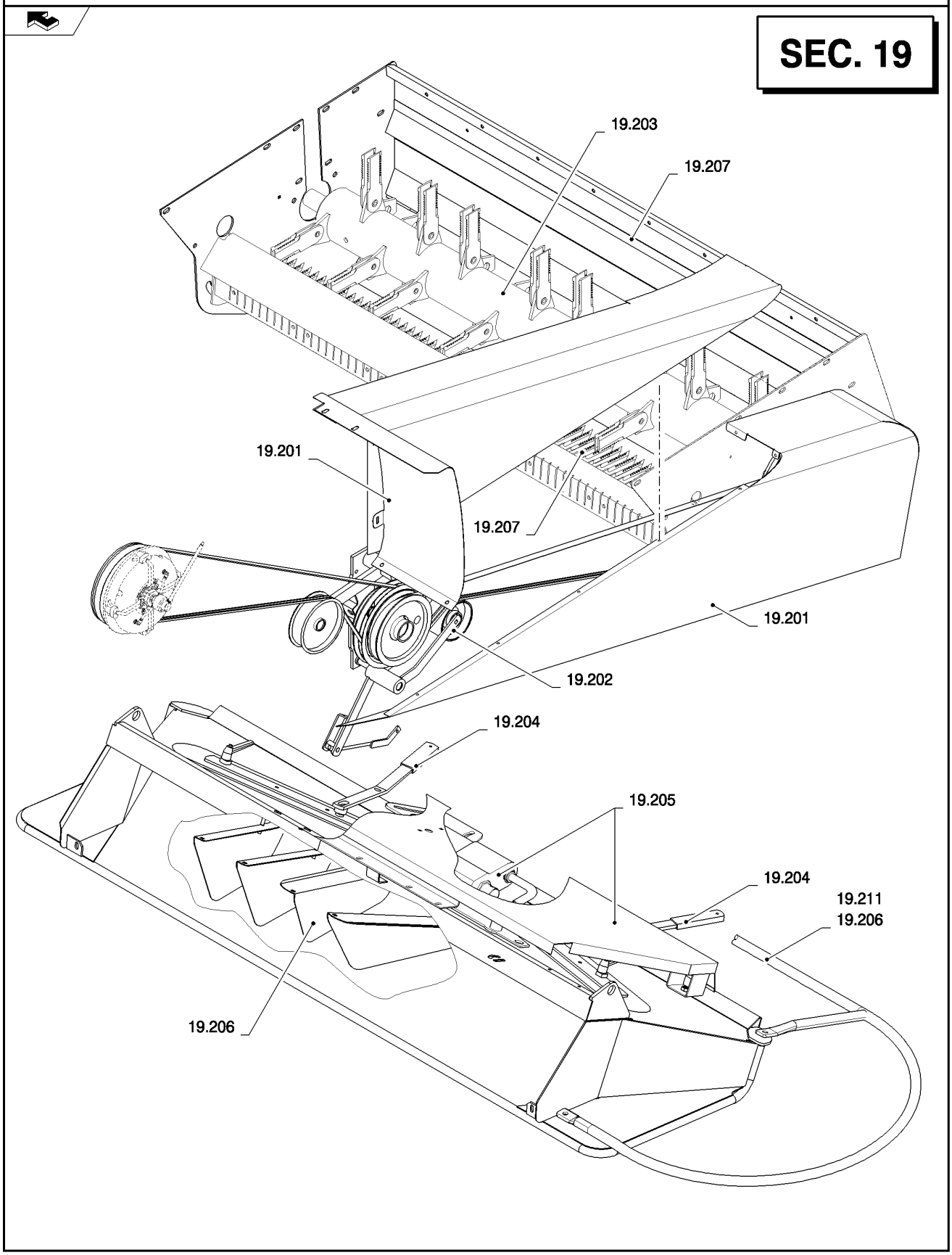

ссылка	Номер детали	Кол-во	Описание

ATTACHMENTS	ACCESSOIRES	ACCESORIO	UDSTYR
ACCESSORIO	ZUBEHÖR	EQUIPAMENTOS	HULPSTUKKEN

SEC. 19

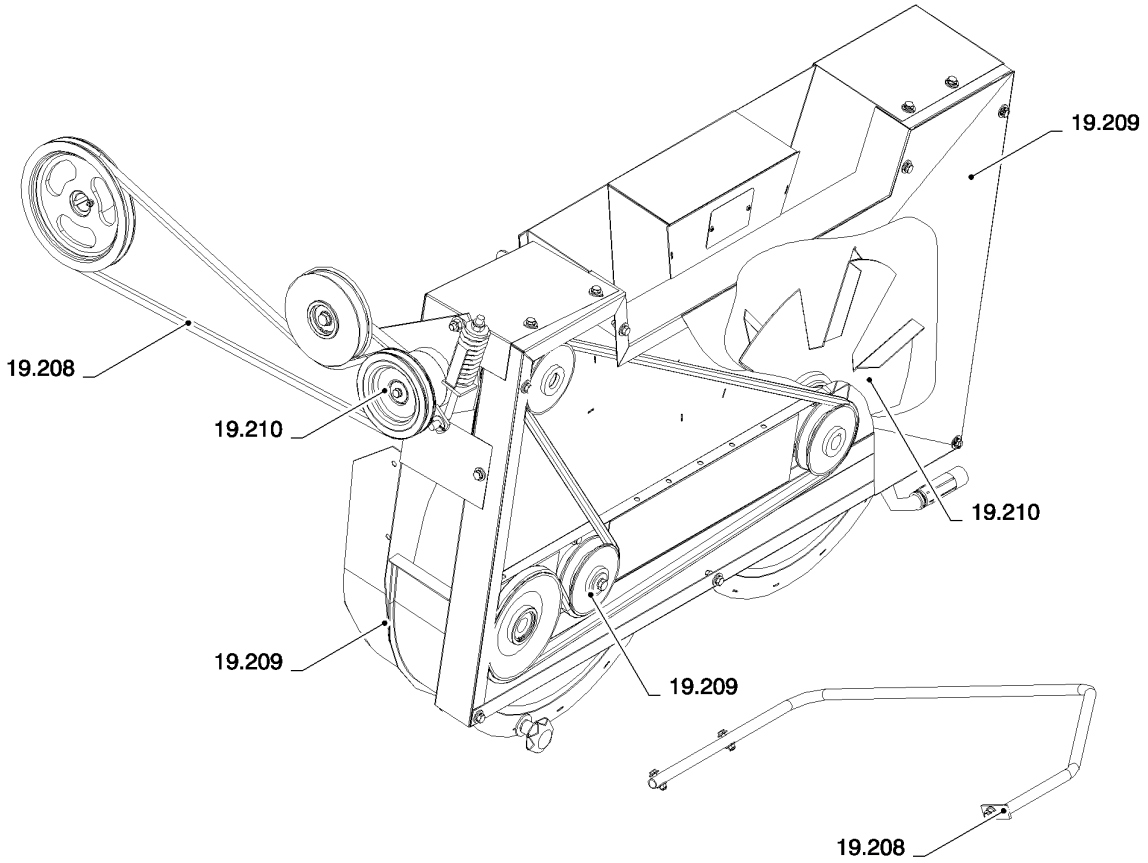

ссылка	Номер детали	Кол-во	Описание

19.201(A 01) CHOPPER DRIVE, SHIELDS

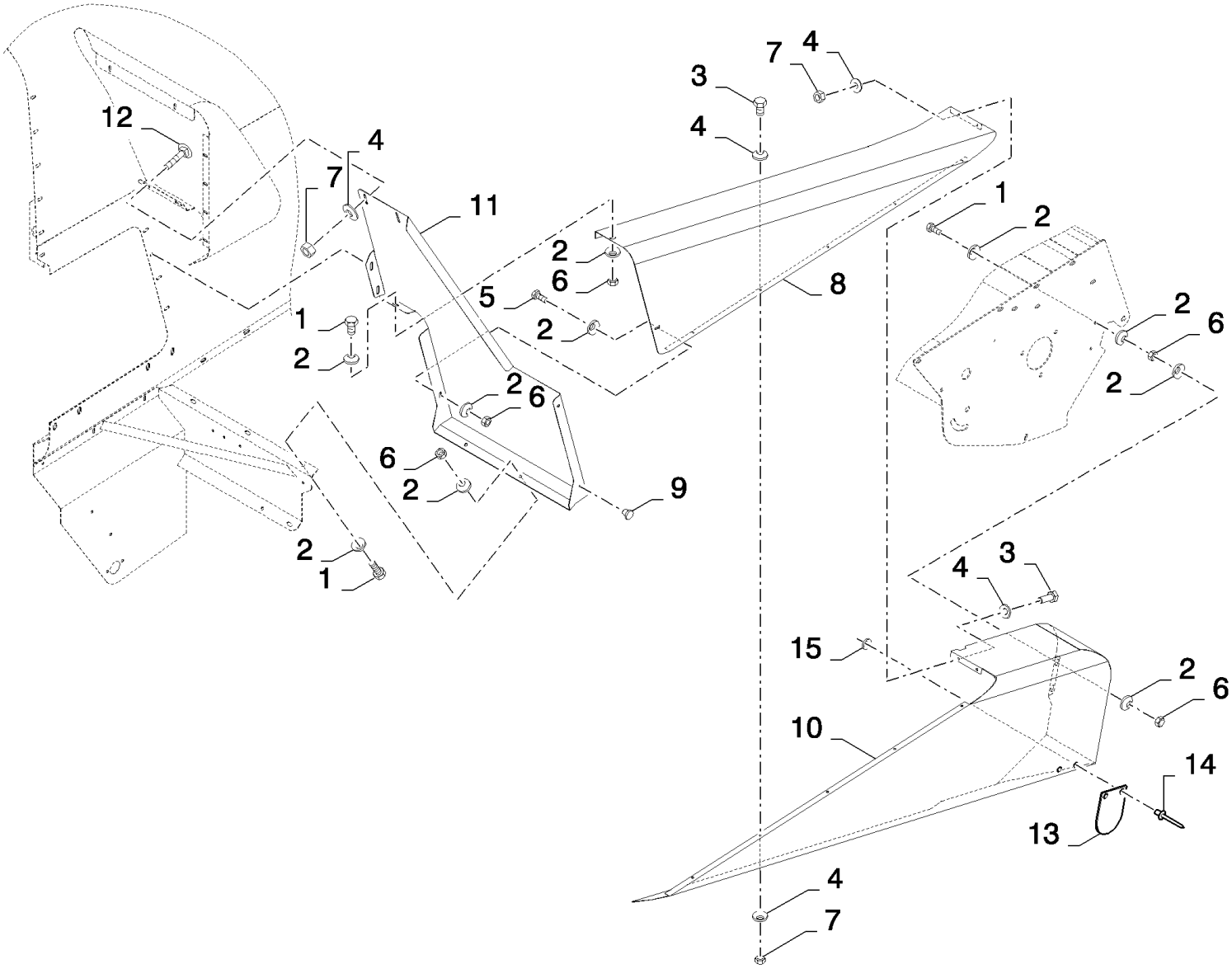

CSX7080 C659 - COMBINE (9/06-8/08)

19.201(A 01) CHOPPER DRIVE, SHIELDS

ссылка	Номер детали	Кол-во	Описание
1	43127	5	BOLT, Hex, M8 x 25, 8.8,
2	412650	16	WASHER, Belleville, M8,
3	86508568	7	SCREW, Hex, M6 x 16, 8.8,
4	322357	16	WASHER, SPRING, Belleville, M6,
5	120104	1	SCREW, Hex, M8 x 20, 8.8,
6	89706690	8	NUT, M8, Cl 8,
7	9706755	9	NUT, M6, Cl 8,
8	87353141	1	SHIELD,
9	331233	2	PLUG,
10	84434189	1	SHIELD,
11	87353138	1	SHIELD,
12	9706703	2	BOLT, CARRIAGE, Short NK, M6 x 20, Cl8.8, Full Thd,
13	84446659	1	PLATE, , ASN D615
14	9512968	2	RIVET, , ASN D615
15	322356	2	WASHER, , ASN D615

19.202(01) CHOPPER DRIVE

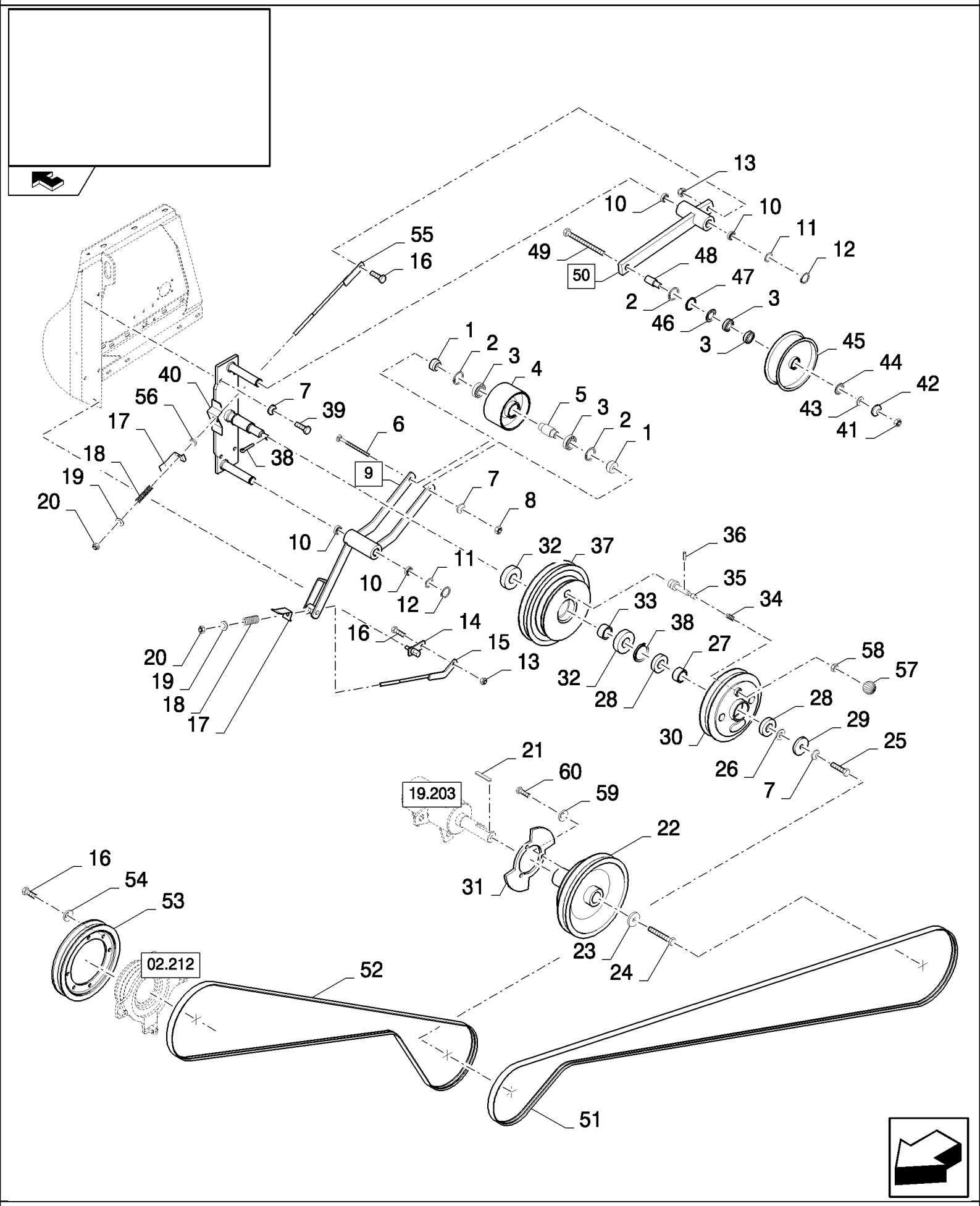

CSX7080 C659 - COMBINE (9/06-8/08)

19.202(01) CHOPPER DRIVE

ссылка	Номер детали	Кол-во	Описание
1	84076275	2	BUSHING,
2	370011	3	RING, SNAP, M52, Int,
3	443898	4	BEARING, BALL,
4	84334348	1	PULLEY,
5	84076197	1	BUSHING,
6	84053391	1	BOLT, CARRIAGE, Short NK, M12 x 130, Cl8.8,
7	140046	6	WASHER, Belleville, M12,
8	9706685	1	NUT, M12, Cl 8,
9	84076317	1	LEVER, (10)
10	420434	4	BUSHING,
11	84000011	2	WASHER, 30MM
12	370003	2	RING, SNAP, M30, Ext,
13	100037	2	NUT, M10 x 1.5, Cl 8,
14	84431514	1	HINGE,
15	84431503	1	ROD,
16	43139	8	SCREW, Hex, M10 x 25, 8.8, Full Thd, M10x25
17	84431388	2	INDICATOR,
18	84814910	2	SPRING,
19	378245	2	WASHER, M12,
20	412126	2	NUT, LOCK, M12 x 1.75, Cl 8,
21	412341	1	KEY,
22	84441435	1	PULLEY,
23	440997	1	WASHER, 17MM
24	385922	1	SCREW, Hex, M16 x 45, 8.8,
25	9706687	1	SCREW, Hex, M12 x 30, 8.8, M16x1.5
26	327084	1	WASHER,
27	84441521	2	SPACER,
28	913716	2	BEARING, BALL,
29	84441824	1	RING,
30	84453029	1	PULLEY,
31	84444721	1	DISC,
32	210086	2	BEARING ASSY, , BSN C603
32	87624213	2	BEARING, BALL, , ASN D604
33	84441520	1	SPACER,
34	26538	1	SPRING,
35	84444511	1	PIN,
36	130078	1	PIN, LOCK, M4 x 30, Slotted,
37	84441441	1	PULLEY,
38	84441806	1	RING,
39	300389	4	BOLT, Hex, M12 x 35, 8.8, Full Thd,
40	84441790	1	SUPPORT,
41	100020	1	NUT, M16, Cl 8,
42	140048	1	WASHER, SPRING, Belleville, M16,
43	84440599	1	WASHER,

19.202(01) CHOPPER DRIVE

ссылка	Номер детали	Кол-во	Описание
44	390515	1	RING,
45	84440508	1	WHEEL, IDLER,
46	391120	1	ELEMENT, SEALING,
47	84991773	1	SHIM,
48	84440601	1	BUSHING,
49	321246	1	BOLT, Hex, M16 x 120, 8.8,
50	84076270	1	LEVER, (10)
51	84076421	1	BELT, TRANSMISSION,
52	84075955	1	BELT, TRANSMISSION,
53	84980735	1	PULLEY,
54	140045	6	WASHER, SPRING, Belleville, M10,
55	84431940	1	ROD,
56	439857	1	BUSHING,
57	84453022	1	BUTTON,
58	100016	1	NUT, M10, Cl 8,
59	322357	3	WASHER, SPRING, Belleville, M6,
60	120100	3	BOLT, Hex, M6 x 20, 8.8,

19.203(A 01) CHOPPER, ROTOR

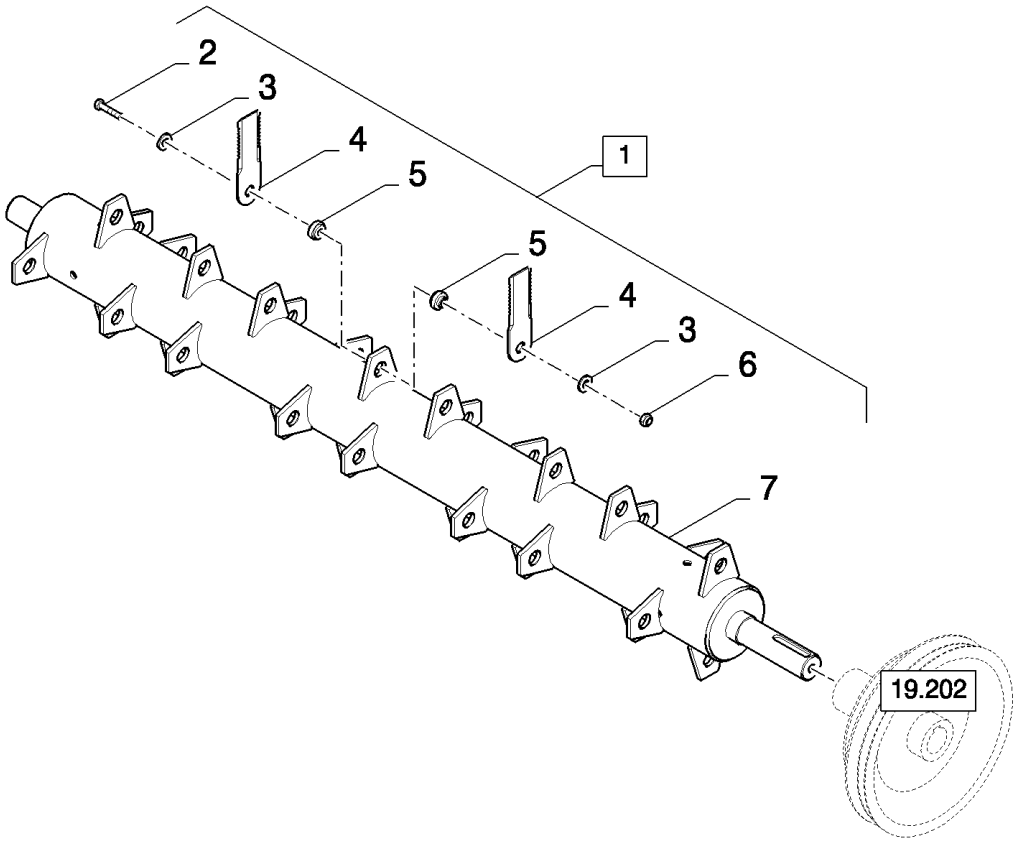

CSX7080 C659 - COMBINE (9/06-8/08)

19.203(A 01) CHOPPER, ROTOR

ссылка	Номер детали	Кол-во	Описание
1	84079088	1	ROTOR,
2	84019581	32	SCREW, M10x50
3	84019619	64	BUSHING,
4	84019620	64	KNIFE,
5	84019615	64	BUSHING,
6	84019584	32	NUT, M10
7	NSS	1	NOT SERVICED SEPARATELY,

19.204(01) MANUAL ADJUSTABLE DEFLECTORS

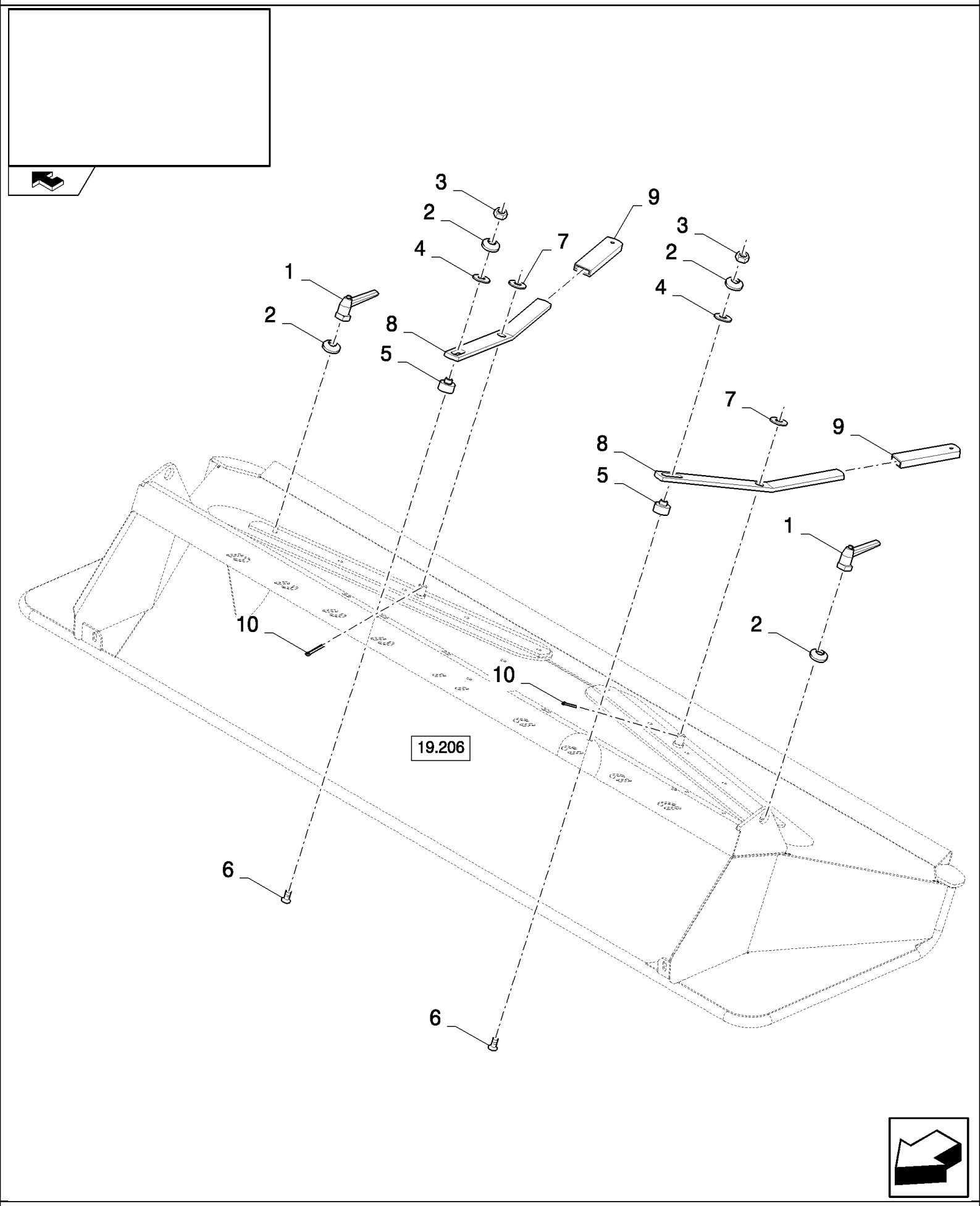

CSX7080 C659 - COMBINE (9/06-8/08)

19.204(01) MANUAL ADJUSTABLE DEFLECTORS

ссылка	Номер детали	Кол-во	Описание
1	84435462	2	HANDLE,
2	322358	4	WASHER, SPRING, Belleville, M8,
3	9706690	2	NUT, M8, Cl 8,
4	140041	2	WASHER, M8 x 28 x 3,
5	84434297	2	BUSHING,
6	84069530	2	SCREW, Hex Soc Flat Hd, M8 x 40, 8.8,
7	378246	2	WASHER, 16MM
8	84435478	2	LEVER,
9	84439164	2	HANDLE GRIP,
10	130004	2	PIN, SPLIT (COTTER), M3.2 x 25,

19.205(01) SPREADER HOOD, REMOTE CONTROL

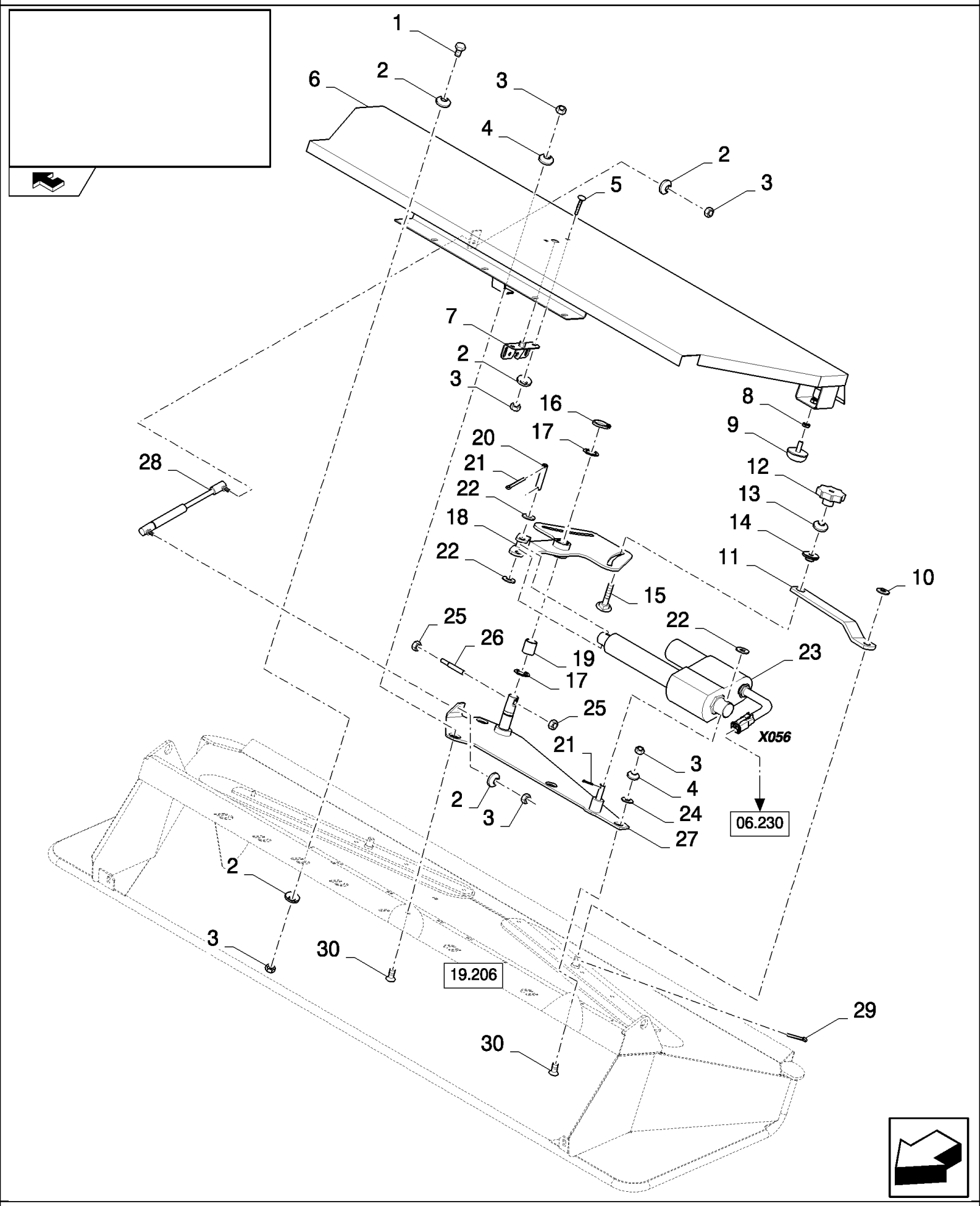

19.205(01) SPREADER HOOD, REMOTE CONTROL

ссылка	Номер детали	Кол-во	Описание
1	120104	5	SCREW, Hex, M8 x 20, 8.8,
2	322358	14	WASHER, SPRING, Belleville, M8,
3	9706690	12	NUT, M8, Cl 8,
4	412650	3	WASHER, Belleville, M8,
5	86507486	2	BOLT, CARRIAGE, Short NK, M8 x 20, Cl8.8, Full Thd,
6	84435678	1	COVER,
7	84015292	1	LOCK,
8	84807411	2	NUT, Thin, M10 x 1.5, Cl 04,
9	190029	2	INSULATOR BLOCK,
10	378246	2	WASHER, 16MM
11	84435480	2	LINKAGE,
12	84440562	2	KNOB,
13	140045	2	WASHER, SPRING, Belleville, M10,
14	84435513	2	BUSHING,
15	350459	2	SCREW, Short NK, M10 x 50, Cl8.8, Full Thd,
16	370002	1	RING, SNAP, M25, Ext,
17	140103	2	WASHER, 26MM
18	84435495	1	LEVER,
19	80395589	1	SLEEVE,
20	84017216	1	PIN,
21	130003	3	PIN, SPLIT (COTTER), M3.2 x 20,
22	378245	3	WASHER, M12,
23	84018921	1	ACTUATOR, , SEE FIGURE 06.701
24	554195	2	WASHER, 9MM
25	100016	2	NUT, M10, Cl 8,
26	84018597	1	ROD, THREADED,
27	84435645	1	SUPPORT,
28	89994348	1	GAS STRUT,
29	130004	2	PIN, SPLIT (COTTER), M3.2 x 25,
30	412495	3	SCREW, Hex Soc Flat Hd, M8 x 20, 8.8, M8x20

19.206(A 01) SPREADER HOOD

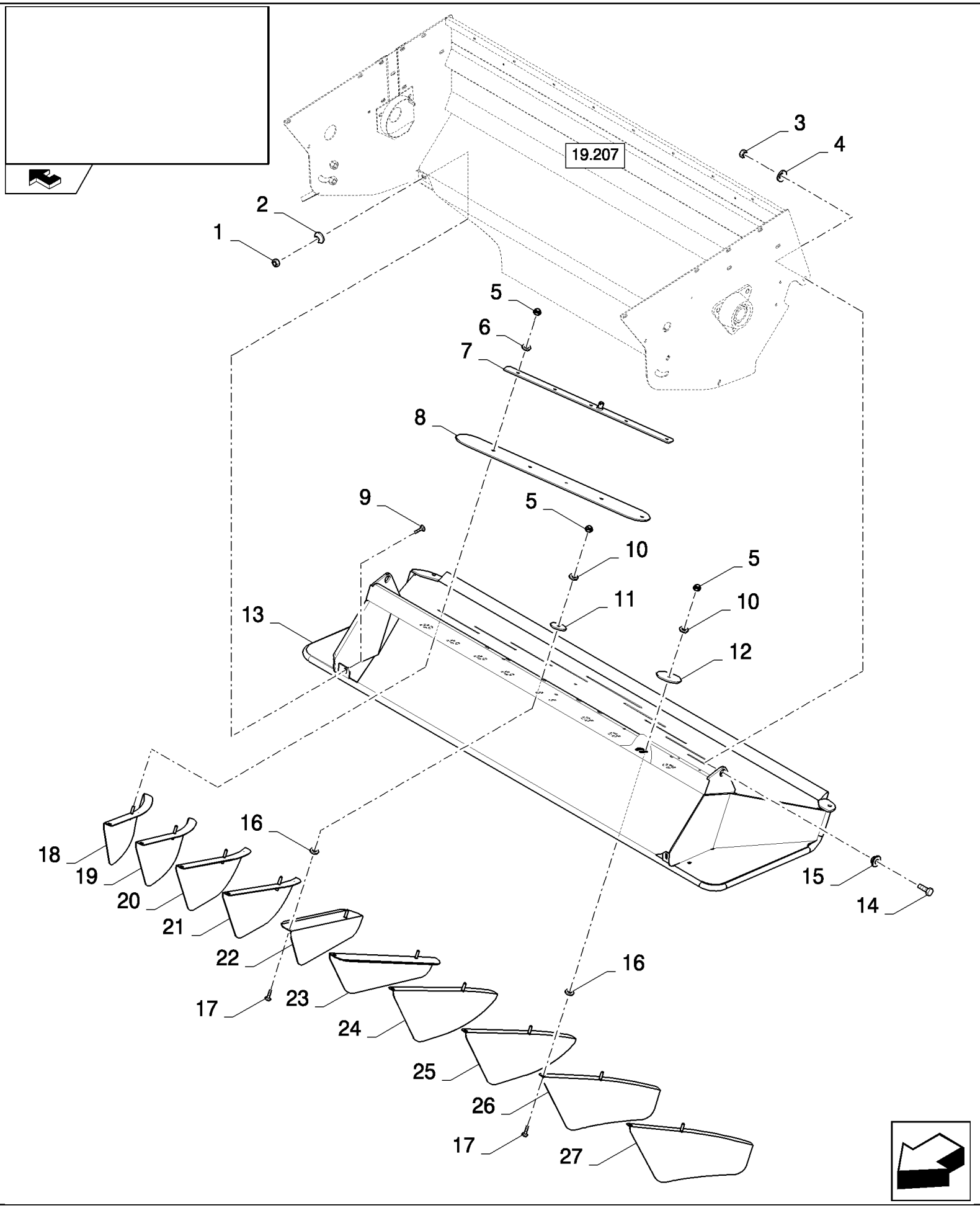

CSX7080 C659 - COMBINE (9/06-8/08)

19.206(A 01) SPREADER HOOD

ссылка	Номер детали	Кол-во	Описание
1	9706690	2	NUT, M8, Cl 8,
2	412650	2	WASHER, Belleville, M8,
3	100020	2	NUT, M16, Cl 8,
4	140048	2	WASHER, SPRING, Belleville, M16,
5	86629542	20	NUT, LOCK, M8 x 1.25, Cl 8,
6	140016	10	WASHER, M8 x 16 x 1.6,
7	84435482	2	PAD, SLIDING,
8	84065131	2	PAD, SLIDING,
9	86507486	2	BOLT, CARRIAGE, Short NK, M8 x 20, Cl8.8, Full Thd,
10	140041	10	WASHER, M8 x 28 x 3,
11	84435270	2	WASHER,
12	84435269	8	WASHER,
13	84434285	1	FRAME,
14	120090	2	SCREW, Hex, M16 x 50, 8.8,
15	84435443	2	BUSHING,
16	747812	10	WASHER, 15MM
17	308761	10	BOLT, CARRIAGE, Short NK, M8 x 25, Cl8.8, Full Thd,
18	84454358	1	DEFLECTOR,
19	84454361	1	DEFLECTOR,
20	84454363	1	DEFLECTOR,
21	84454365	1	DEFLECTOR,
22	84435316	1	DEFLECTOR,
23	84435322	1	DEFLECTOR,
24	84454366	1	DEFLECTOR,
25	84454367	1	DEFLECTOR,
26	84454369	1	DEFLECTOR,
27	84454370	1	DEFLECTOR,

19.207(A 01) CHOPPER, ROTOR FRAME

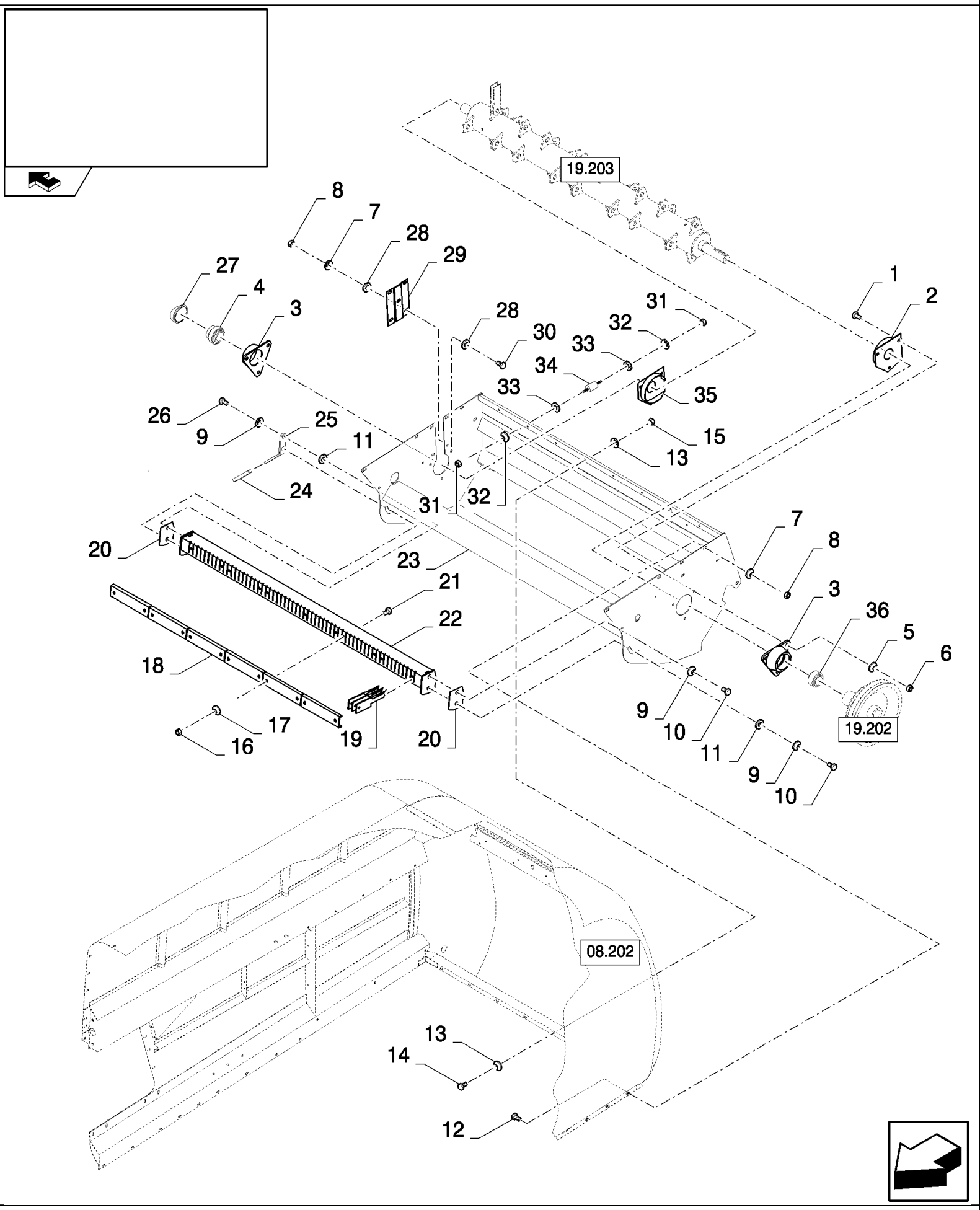

CSX7080 C659 - COMBINE (9/06-8/08)

19.207(A 01) CHOPPER, ROTOR FRAME

ссылка	Номер детали	Кол-во	Описание
1	300389	6	BOLT, Hex, M12 x 35, 8.8, Full Thd,
2	84434806	1	GUARD,
3	84334208	2	HOUSING, BEARING,
4	385424	1	BEARING ASSY,
5	140046	6	WASHER, Belleville, M12,
6	9706685	6	NUT, M12, Cl 8,
7	140045	9	WASHER, SPRING, Belleville, M10,
8	100016	9	NUT, M10, Cl 8,
9	140048	4	WASHER, SPRING, Belleville, M16,
10	43167	2	BOLT, Hex, M16 x 30, 8.8, Full Thd,
11	140020	3	WASHER, M16 x 30 x 3,
12	338949	7	BOLT, CARRIAGE, Short NK, M10 x 25, Cl8.8, Full Thd,
13	322358	16	WASHER, SPRING, Belleville, M8,
14	120104	8	SCREW, Hex, M8 x 20, 8.8,
15	9706690	8	NUT, M8, Cl 8,
16	86629542	12	NUT, LOCK, M8 x 1.25, Cl 8,
17	140041	12	WASHER, M8 x 28 x 3,
18	84434026	6	RETAINER,
19	9516450	60	KNIFE,
20	84434200	AR	SHIM,
21	86528166	12	BOLT, Hex, M8 x 120, 8.8, M8x120
22	84440064	1	SUPPORT,
23	87373172	1	FRAME,
24	84439164	1	HANDLE GRIP,
25	84434209	1	LEVER,
26	43168	2	BOLT, Hex, M16 x 40, 8.8,
27	137395	1	DUST CAP,
28	140042	4	WASHER, M10 x 34 x 3,
29	84440375	1	PLATE,
30	43139	2	SCREW, Hex, M10 x 25, 8.8, Full Thd, M10x25
31	9706755	8	NUT, M6, Cl 8,
32	322357	8	WASHER, SPRING, Belleville, M6,
33	448516	8	SPACER,
34	9513734	4	SILENTBLOC,
35	84434825	1	GUARD,
36	84453848	1	BEARING, BALL,

19.208(A 01) CHAFF SPREADER

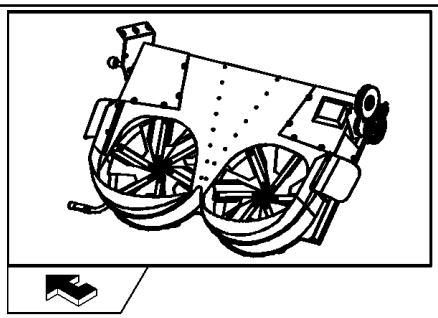

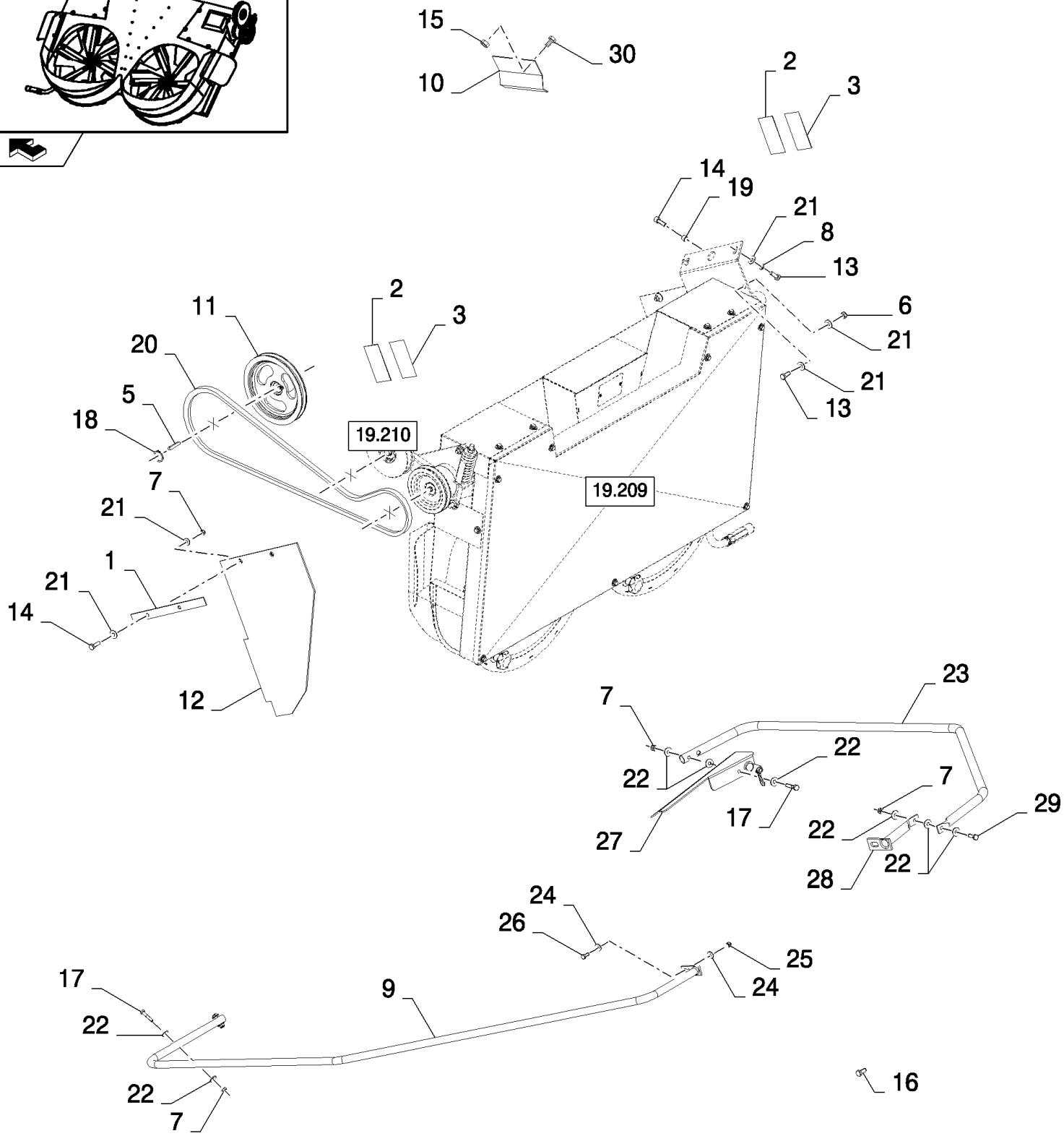

Art not yet available

4

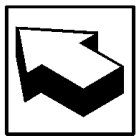

CSX7080 C659 - COMBINE (9/06-8/08)

19.208(A 01) CHAFF SPREADER

ссылка	Номер детали	Кол-во	Описание
1	84800261	2	BRACKET,
2	84056170	2	DECAL,
3	84014117	2	DECAL,
4	84800262	1	HOUSING,
5	170010	1	KEY, M10
6	100037	8	NUT, M10 x 1.5, Cl 8, 8M
7	86629542	6	NUT, LOCK, M8 x 1.25, Cl 8, 10.2MM
8	140045	2	WASHER, SPRING, Belleville, M10,
9	84800263	1	PIPE,
10	NS	2	NOT SERVICED,
11	84800265	1	PULLEY,
12	84800266	2	SHIELD,
13	11106231	6	BOLT, Hex, M10 x 25, 10.9, Full Thd, M10x25
14	43140	5	BOLT, Hex, M10 x 30, 8.8, Full Thd,
15	336199	4	BOLT, Hex, M8 x 12, 8.8, Full Thd,
16	120104	2	SCREW, Hex, M8 x 20, 8.8,
17	43129	5	BOLT, Hex, M8 x 40, 8.8,
18	370003	1	RING, SNAP, M30, Ext,
19	84800267	1	SPACER,
20	84790244	1	BELT, TRANSMISSION,
21	378244	18	WASHER, M10,
22	307789	14	WASHER, 8.4MM
23	84800268	1	PIPE,
24	140223	4	WASHER,
25	100038	2	NUT, M12 x 1.75, Cl 8,
26	300388	2	SCREW, Hex, M12 x 25, 8.8,
27	84800269	1	BRACKET,
28	84800270	1	PIPE,
29	120161	1	BOLT, Hex, M8 x 25, 8.8, M8x25
30	100067	4	NUT, LOCK, M8 x 1.25, Cl 8,

19.209(A 01) CHAFF SPREADER

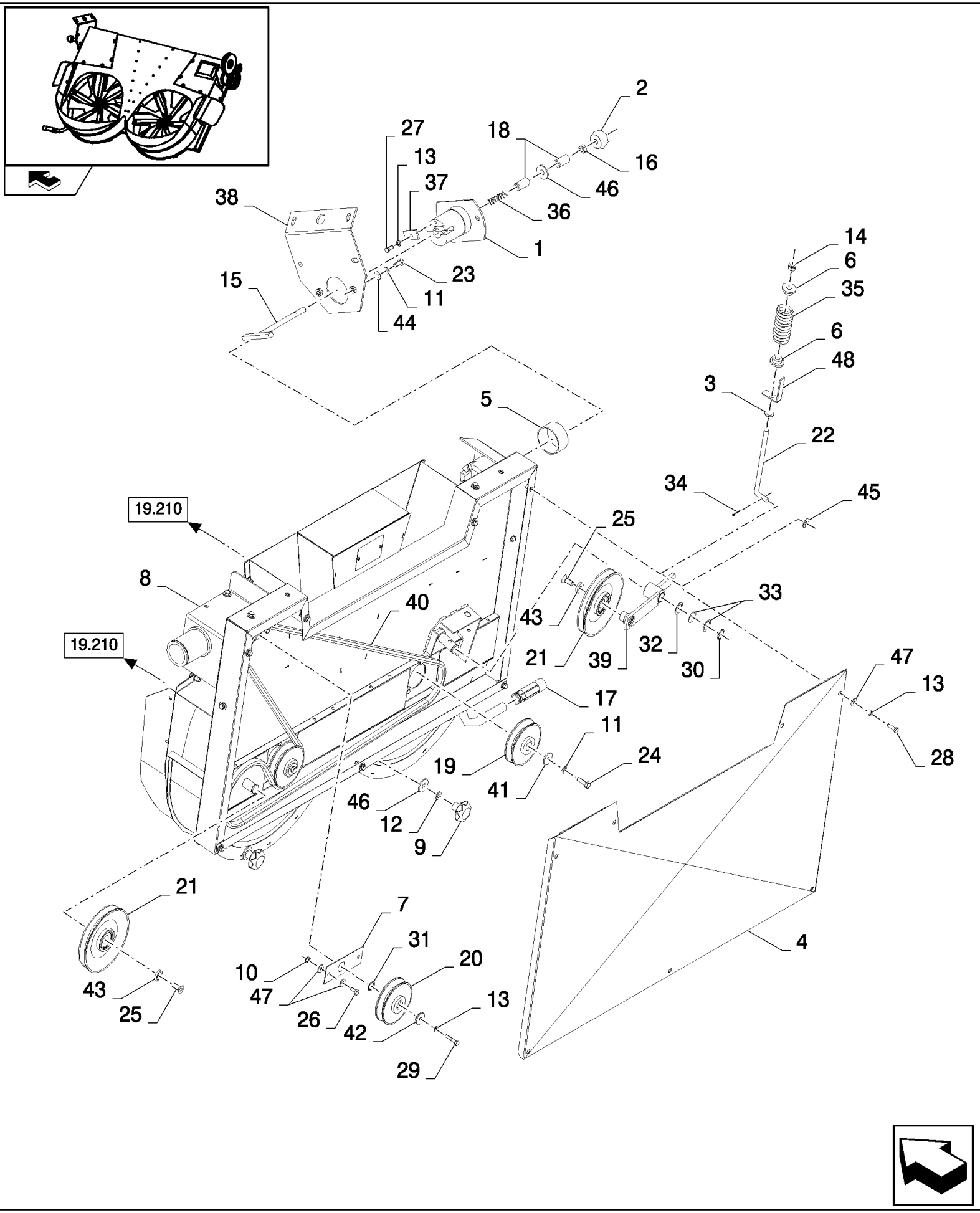

CSX7080 C659 - COMBINE (9/06-8/08)

19.209(A 01) CHAFF SPREADER

ссылка	Номер детали	Кол-во	Описание
1	84800233	1	SECTOR, TOOTHED,
2	84074787	1	KNOB,
3	84043655	1	WASHER,
4	84800236	1	PLATE,
5	84056131	1	BUSHING,
6	84056165	2	SCREW,
7	84056128	1	PLATE,
8	84800248	1	HOUSING,
9	84800253	2	KNOB,
10	86629542	2	NUT, LOCK, M8 x 1.25, Cl 8,
11	140045	3	WASHER, SPRING, Belleville, M10,
12	84019576	2	WASHER, 12.2MM
13	322358	AR	WASHER, SPRING, Belleville, M8,
14	100038	1	NUT, M12 x 1.75, Cl 8,
15	84056126	1	ROD,
16	9706685	1	NUT, M12, Cl 8,
17	84056140	1	HANDLE, CRANKED,
18	84056127	2	BUSHING,
19	84074791	2	PULLEY,
20	84056120	1	PULLEY,
21	84056124	1	PULLEY,
22	84056165	2	SCREW,
23	11106231	2	BOLT, Hex, M10 x 25, 10.9, Full Thd,
24	43140	2	BOLT, Hex, M10 x 30, 8.8, Full Thd,
25	9837786	2	SCREW, Hex Soc Hd, M12 x 20, 8.8, M12x20
26	16043224	18	BOLT, Hex, M8 x 16, 8.8, Full Thd,
27	120104	1	SCREW, Hex, M8 x 20, 8.8,
28	43127	AR	BOLT, Hex, M8 x 25, 8.8,
29	412479	1	BOLT, Hex, M8 x 35, 8.8,
30	370002	1	RING, SNAP, M25, Ext,
31	84056134	1	CIRCLIP,
32	84074788	1	SHIM, THK. : 1MM
33	84074789	2	SHIM, THK. : 2MM
34	130004	1	PIN, SPLIT (COTTER), M3.2 x 25,
35	84056141	1	SPRING,
36	84074786	1	SPRING,
37	84056151	1	PLATE, COVER,
38	84800255	1	SUPPORT,
39	84800257	1	ARM,
40	84790356	1	BELT, TRANSMISSION,
41	84056153	2	WASHER,
42	84056137	1	WASHER,
43	84056154	2	WASHER,
44	378244	2	WASHER, M10,

19.209(A 01) CHAFF SPREADER

ссылка	Номер детали	Кол-во	Описание
45	140223	1	WASHER, 12.5MM
46	84019577	3	WASHER, 13MM
47	307789	AR	WASHER, 8.4MM
48	87544445	1	INDICATOR,

19.210(A 01) CHAFF SPREADER ROTORS

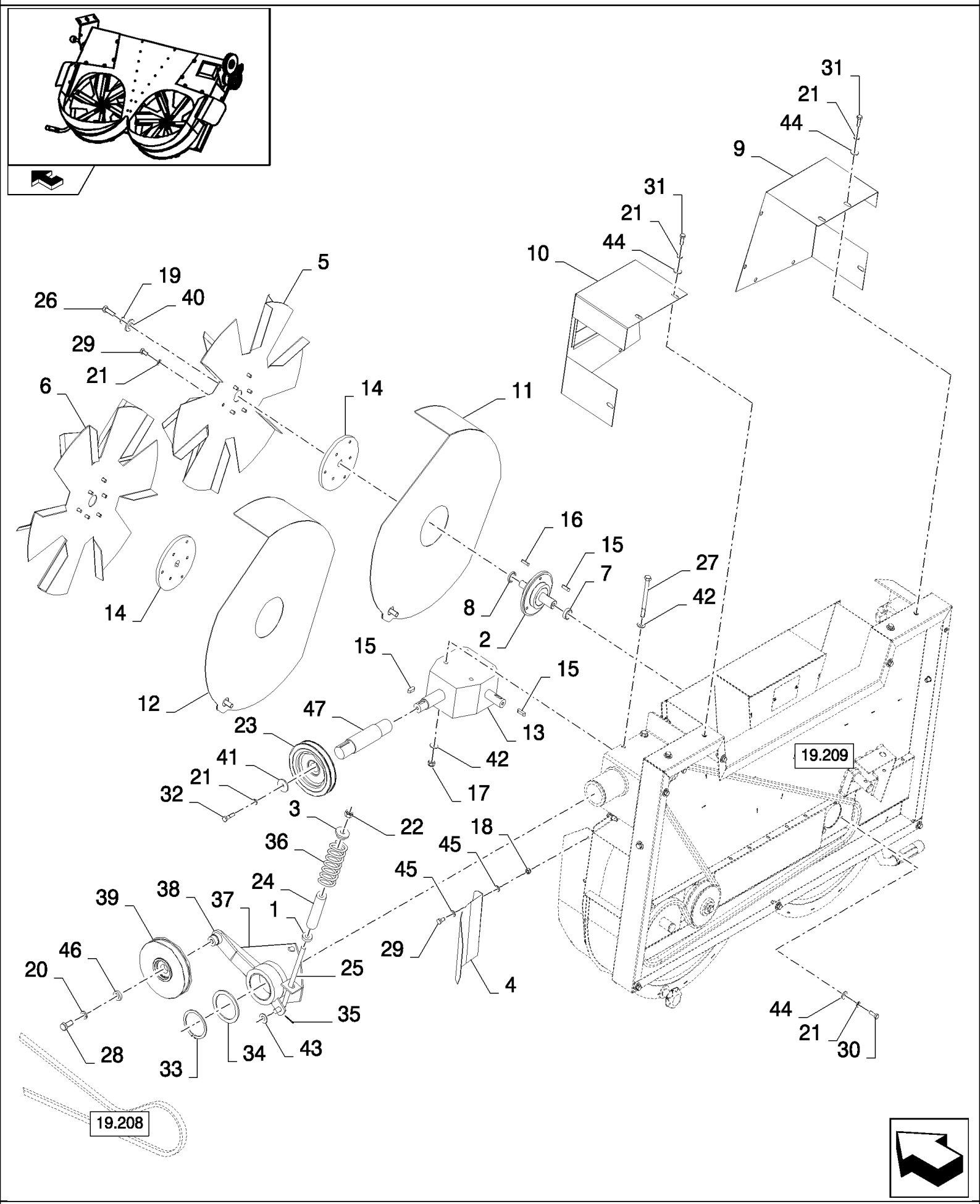

CSX7080 C659 - COMBINE (9/06-8/08)

19.210(A 01) CHAFF SPREADER ROTORS

ссылка	Номер детали	Кол-во	Описание
1	84043655	1	WASHER,
2	84800234	2	HUB,
3	84056165	2	SCREW,
4	84800238	2	PLATE,
5	84800240	1	ROTOR,
6	84800242	1	ROTOR,
7	84056129	2	SPACER,
8	84056133	2	SPACER,
9	84800244	1	COVER,
10	84800246	1	COVER,
11	87544438	1	PLATE,
12	87544440	1	PLATE,
13	84056139	1	GEARBOX,
14	84056121	2	HUB,
15	170005	4	KEY,
16	84056144	2	KEY,
17	100037	4	NUT, M10 x 1.5, Cl 8,
18	86629542	4	NUT, LOCK, M8 x 1.25, Cl 8,
19	140045	3	WASHER, SPRING, Belleville, M10,
20	84019576	1	WASHER, 12.2MM
21	322358	AR	WASHER, SPRING, Belleville, M8,
22	100038	1	NUT, M12 x 1.75, Cl 8,
23	84800254	1	PULLEY,
24	87544444	1	INDICATOR,
25	84056165	1	SCREW,
26	43140	2	BOLT, Hex, M10 x 30, 8.8, Full Thd,
27	120118	4	BOLT, Hex, M10 x 120, 8.8, Full Thd,
28	9706687	1	SCREW, Hex, M12 x 30, 8.8,
29	16043224	18	BOLT, Hex, M8 x 16, 8.8, Full Thd,
30	120104	6	SCREW, Hex, M8 x 20, 8.8,
31	43127	AR	BOLT, Hex, M8 x 25, 8.8,
32	300381	1	BOLT, Hex, M8 x 35, 8.8, M8x35
33	300636	1	CIRCLIP, M70, Ext,
34	84056138	1	SHIM, THK. : 3.5MM
35	130004	1	PIN, SPLIT (COTTER), M3.2 x 25,
36	84056141	1	SPRING,
37	84800256	1	SUPPORT,
38	84800258	1	ARM,
39	84056163	1	PULLEY,
40	84056152	2	WASHER,
41	84056137	1	WASHER,
42	378244	8	WASHER, M10,
43	140223	1	WASHER, 12.5MM
44	307789	AR	WASHER, 8.4MM

19.210(A 01) CHAFF SPREADER ROTORS

ссылка	Номер детали	Кол-во	Описание
45	378243	8	WASHER, M8,
46	84056166	1	WASHER,
47	87544446	1	SHAFT,

CSX7080 C659 - COMBINE (9/06-8/08)

19.211(A 01) SAFETY RAILING ON CHOPPER - FOR LATERALE ONLY

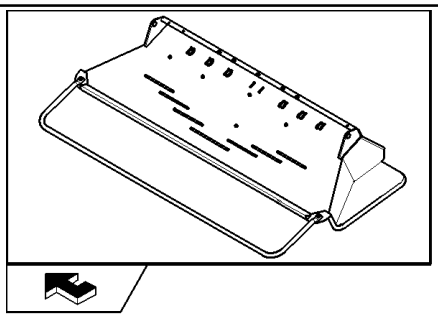

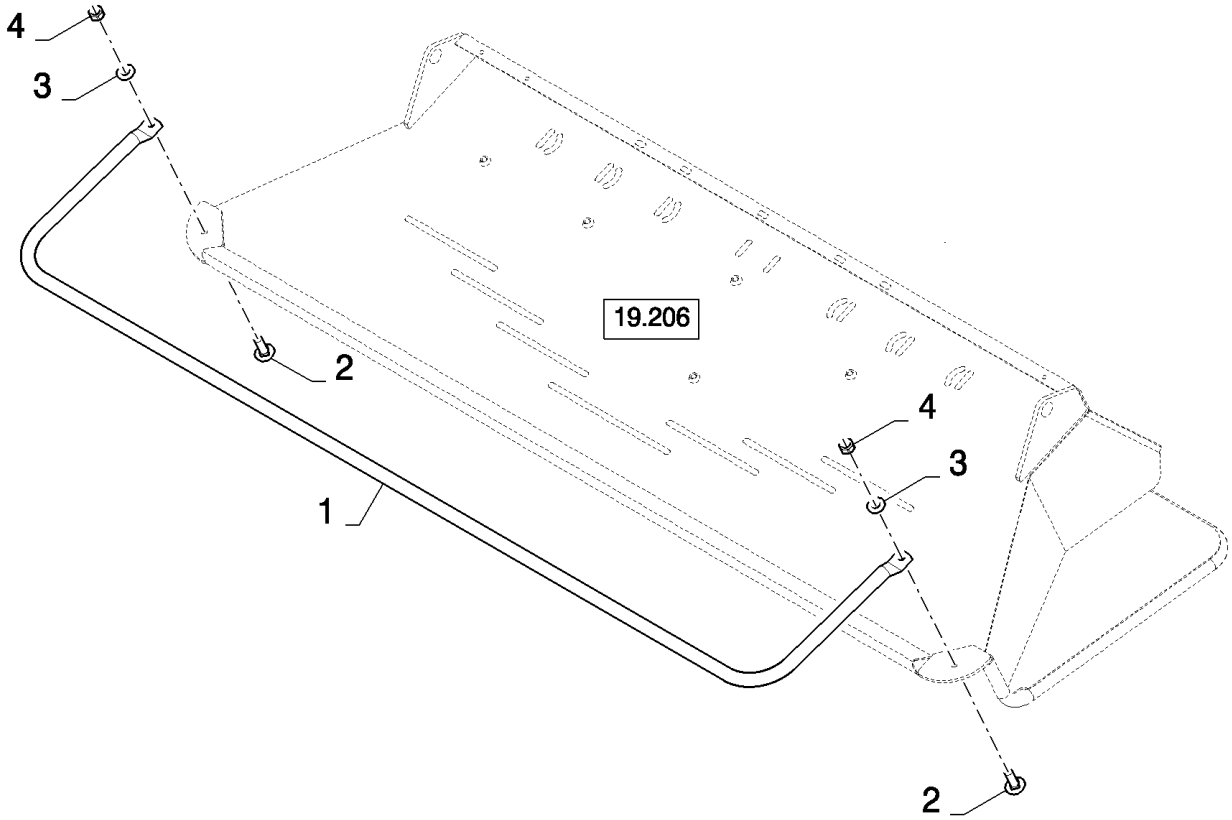

CSX7080 C659 - COMBINE (9/06-8/08)

19.211(A 01) SAFETY RAILING ON CHOPPER - FOR LATERALE ONLY

ссылка	Номер детали	Кол-во	Описание
1	87708101	1	PROTECTION, , FOR CSX7060 ONLY
1	87707749	1	PROTECTION, , FOR CSX7080 ONLY
2	308761	2	BOLT, CARRIAGE, Short NK, M8 x 25, Cl8.8, Full Thd,
3	322358	2	WASHER, SPRING, Belleville, M8,
4	9706690	2	NUT, M8, Cl 8,

HEADERS	**BEC CUEILLEUR**	**BARRA**	**SKÆREBORDE**
BARRA	**SCHNEIDWERK**	**CABEÇALHO DE CEIFA**	**MAAIBORDEN**

SEC. 20

High-Capacity Grain Header

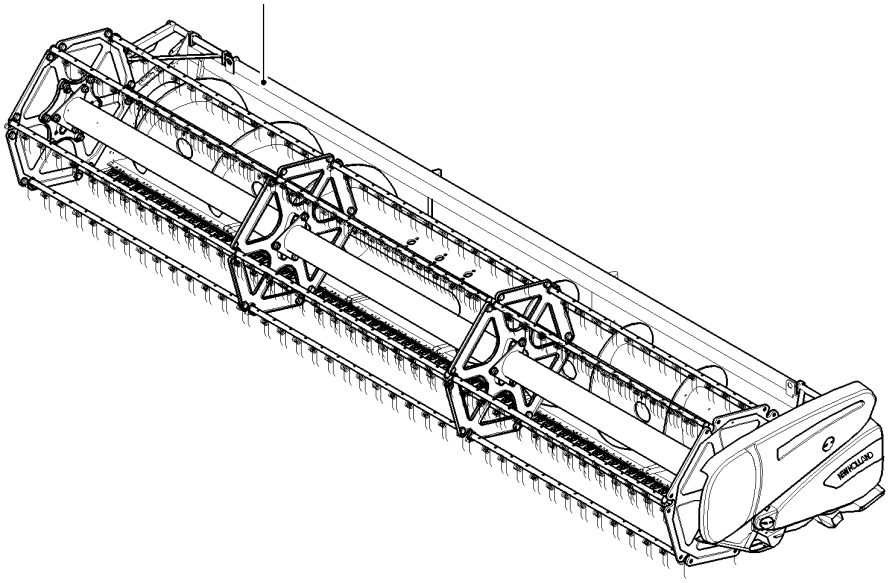

Maize Header

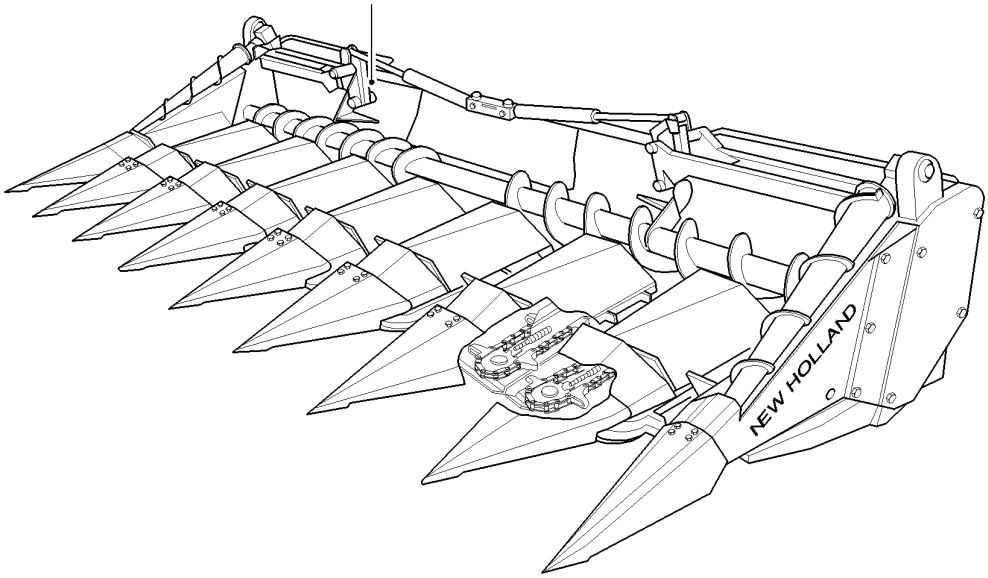

ссылка	Номер детали	Кол-во	Описание