0.0016(01) MAIN SECTIONS

MAIN SECTIONS	**SECTIONS PRINCIPALES**	**SECCIONES PRINCIPALES**	**HOVEDAFSNIT**
SEZIONI PRINCIPALI	**HAUPTABSCHNITTE**	**SECÇÕES PRINCIPAIS**	**HOOFDSECTIES**

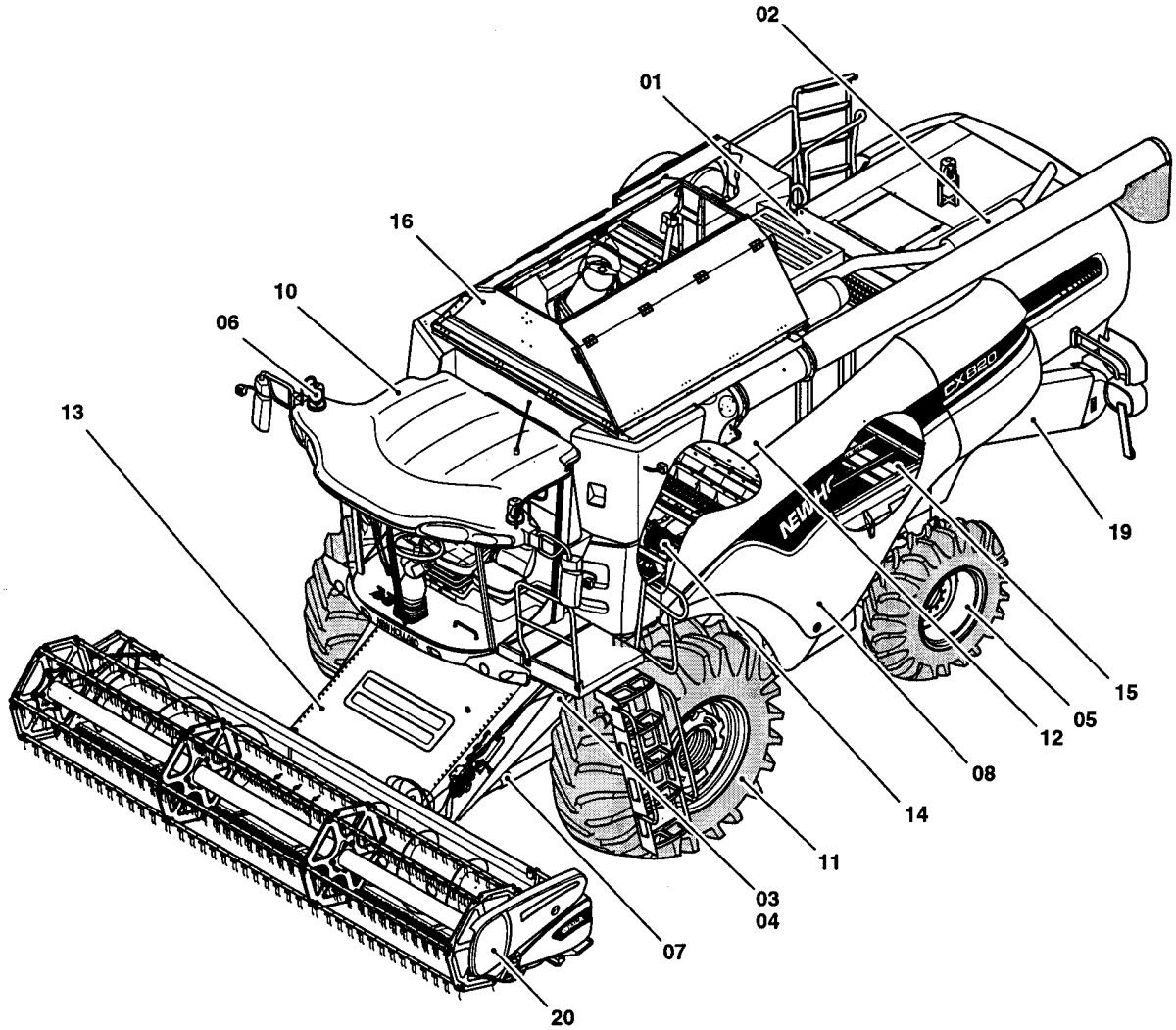

CX880 COMBINE - BASE UNIT (2/01-)

0.0016(01) MAIN SECTIONS

ссылка	Номер детали	Кол-во	Описание

ENGINE	**MOTEUR**	**MOTOR**	**MOTOR**
MOTORE	**MOTOR**	**MOTOR**	**MOTOR**

SEC. 1

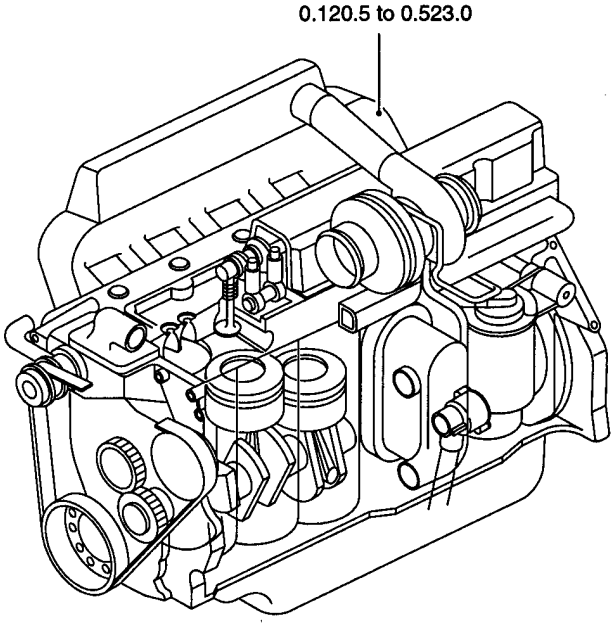

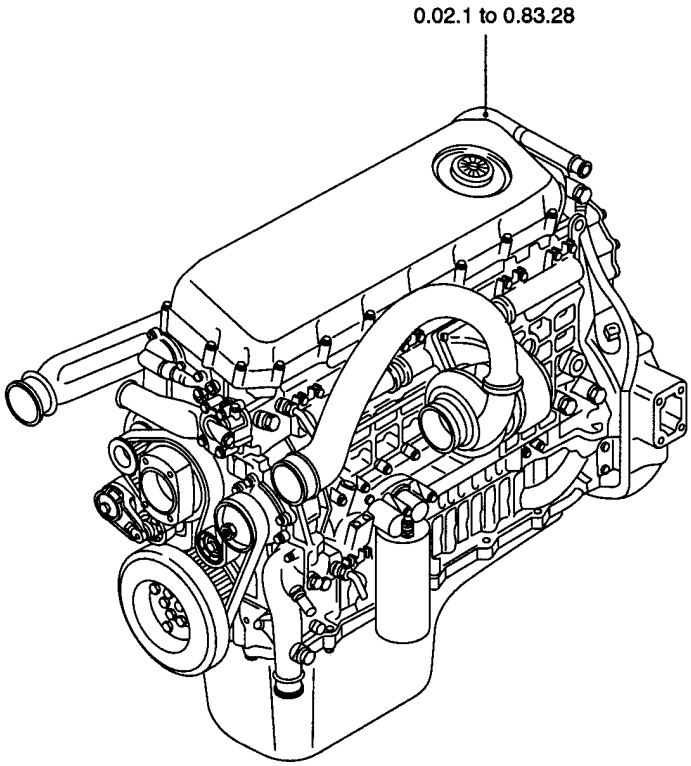

CX880 COMBINE - BASE UNIT (2/01-)

0.0017(01) SECTION LIST 1

ссылка	Номер детали	Кол-во	Описание

ENGINE EQUIPMENT	**EQUIPEMENT MOTEUR**	**EQUIPO MOTOR**	**MOTORUDSTYR**
EQUIPAGGIAMENTO MOTORE	**MOTORAUSRÜSTUNG**	**EQUIPAMENTO DO MOTOR**	**MOTORUITRUSTING**

SEC. 2

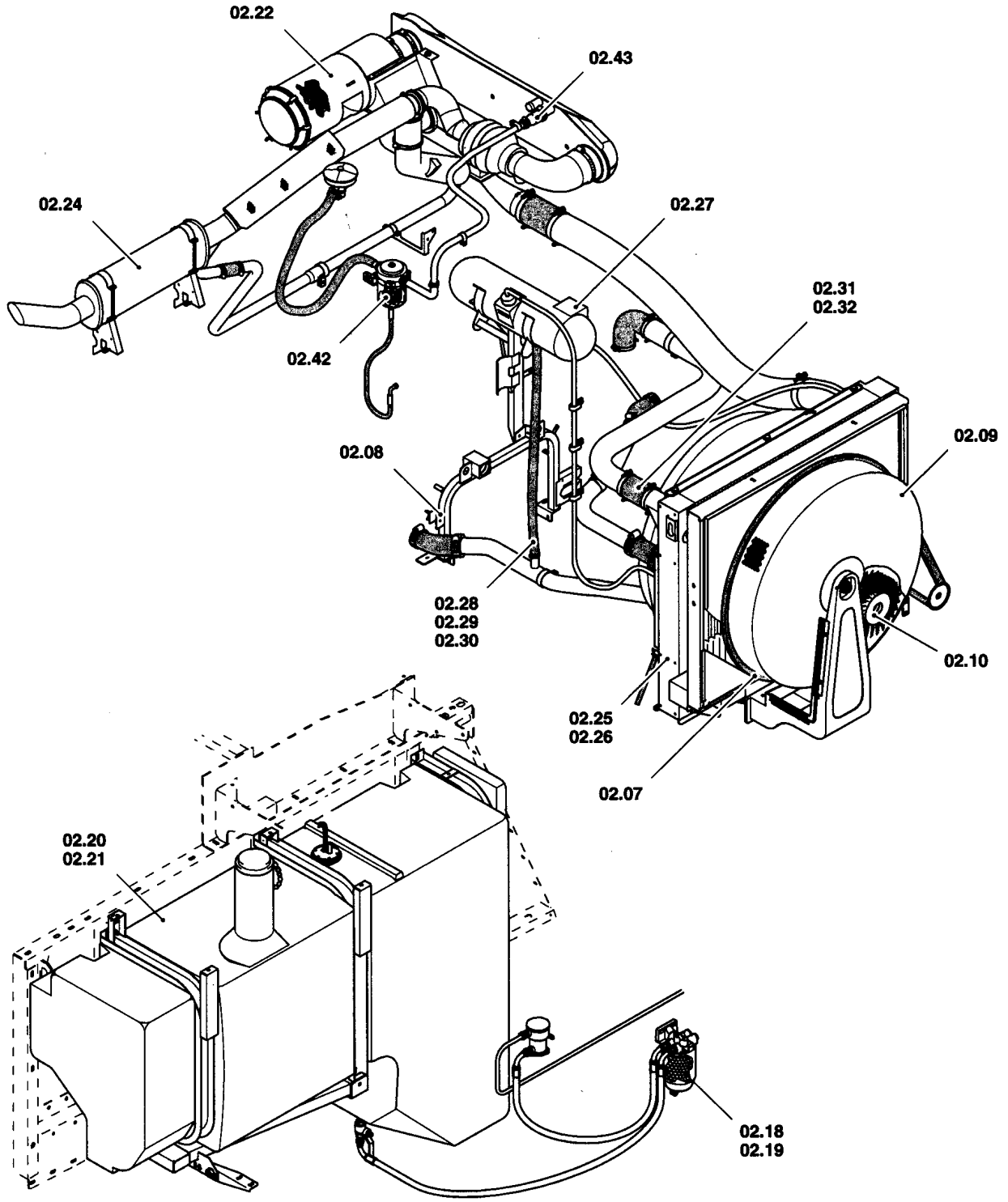

CX880 COMBINE - BASE UNIT (2/01-)

0.0018(01) SECTION LIST 2

ссылка	Номер детали	Кол-во	Описание

ENGINE EQUIPMENT	**EQUIPEMENT MOTEUR**	**EQUIPO MOTOR**	**MOTORUDSTYR**
EQUIPAGGIAMENTO MOTORE	**MOTORAUSRÜSTUNG**	**EQUIPAMENTO DO MOTOR**	**MOTORUITRUSTING**

SEC. 2

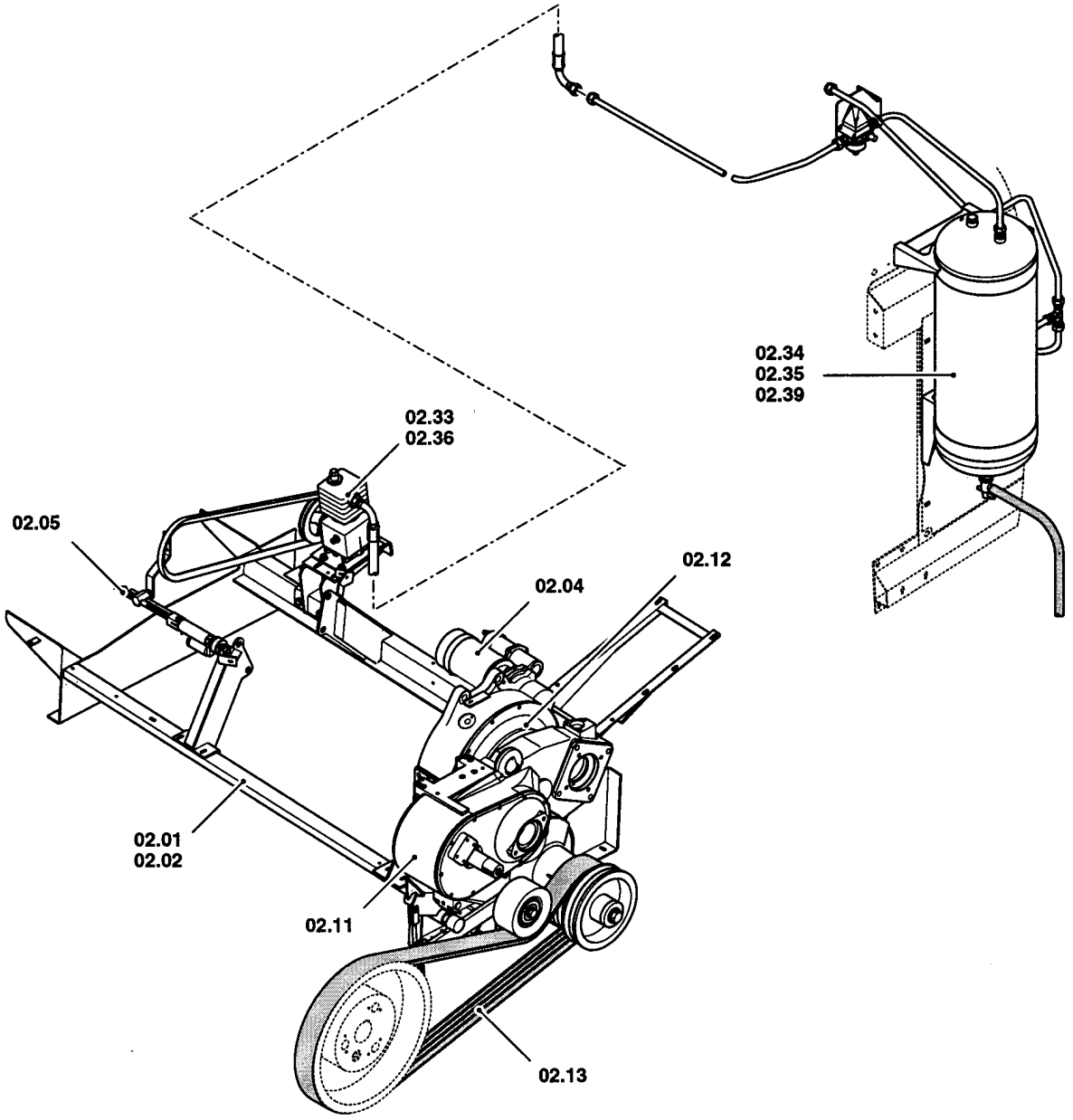

ссылка	Номер детали	Кол-во	Описание

TRANSMISSION	**TRANSMISSION**	**TRANSMISION**	**TRANSMISSION**
TRANSMISSION	**TRANSMISSION**	**TRANSMISSÃO**	**TRANSMISSIE**

SEC. 3

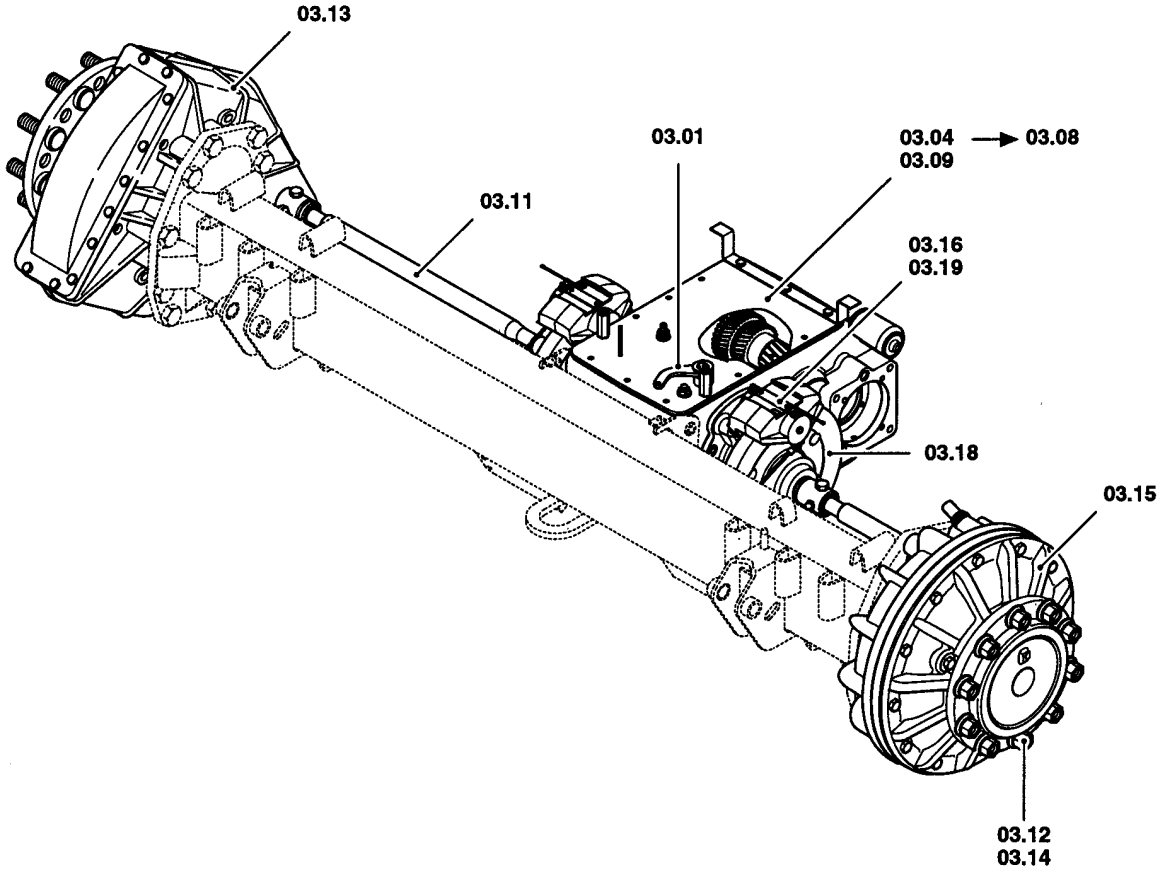

ссылка	Номер детали	Кол-во	Описание

FRONT AXLE	**ESSIEU AVANT**	**EJE DELANTERO**	**FORAKSEL**
ASSALE ANTERIORE	**VORDERACHSE**	**EIXO DIANTIERO**	**VOORAS**

SEC. 4

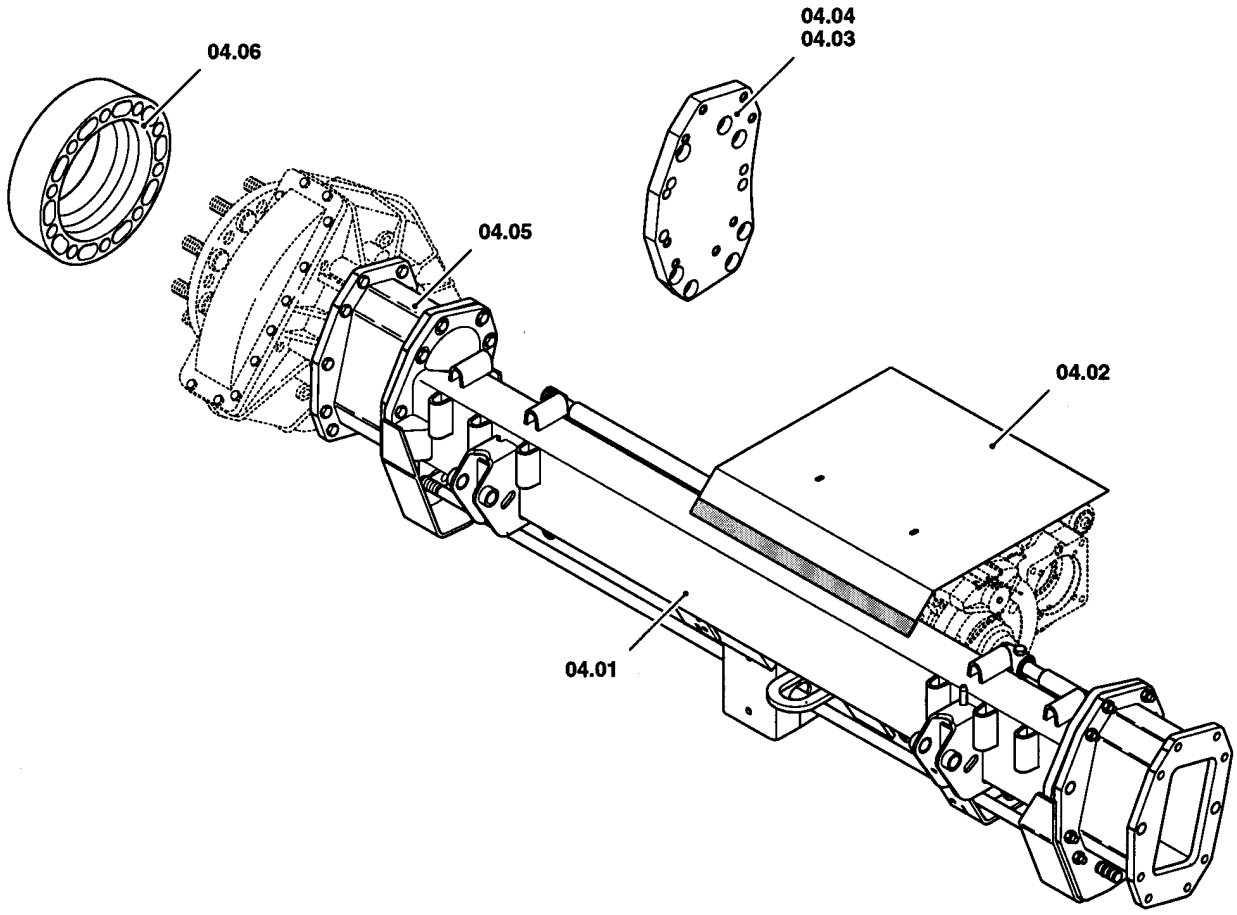

ссылка	Номер детали	Кол-во	Описание

REAR AXLE	**ESSIEU POSTÉRIEUR**	**EJE POSTERIOR**	**MANCANTE**
ASSALE POSTERIORE	**HINTERACHSE**	**PONTE TRASEIRO**	**ACHTERAS**

SEC. 5

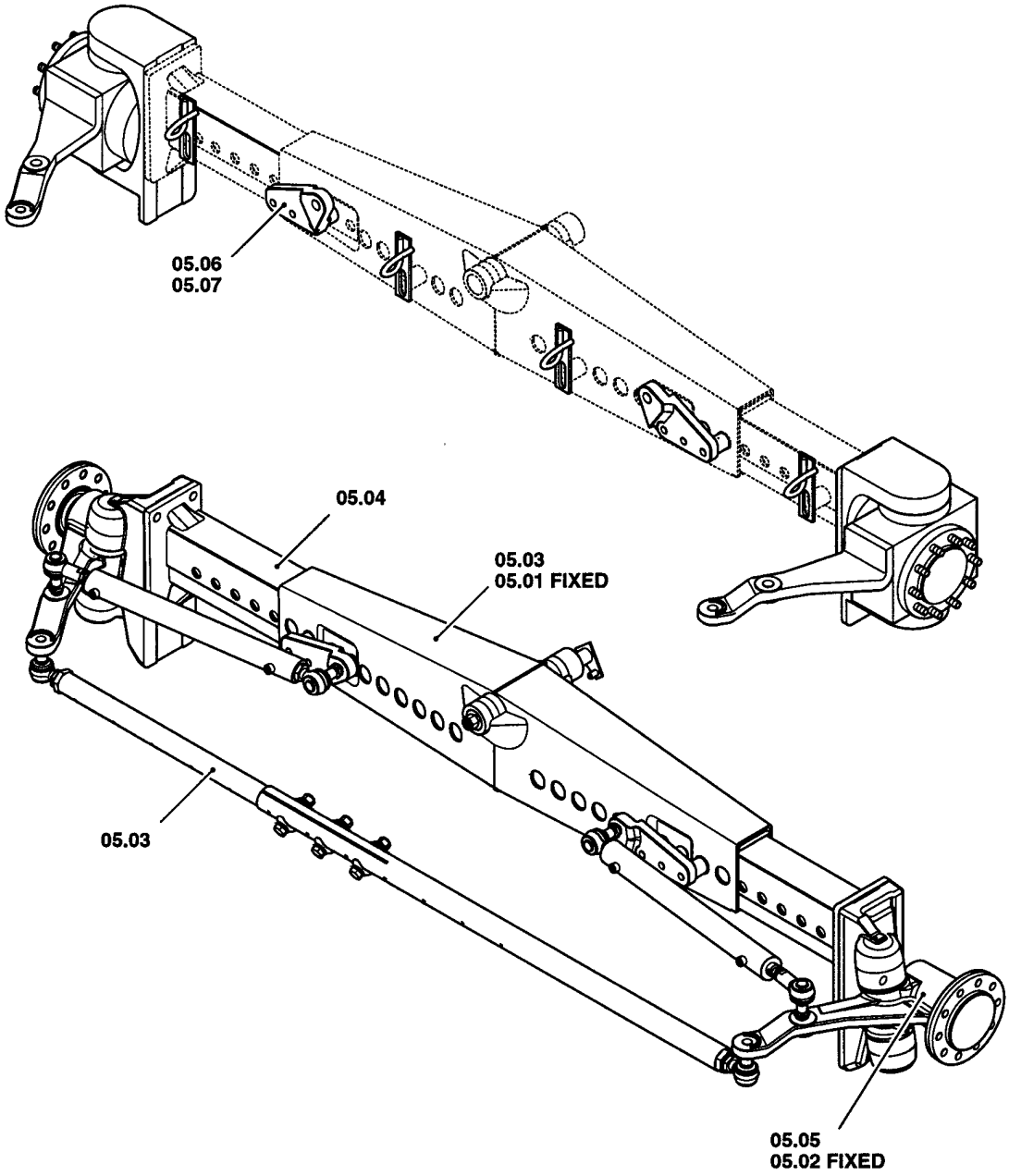

ссылка	Номер детали	Кол-во	Описание

ELECTRICAL SYSTEM	**SYSTÈME ELECTRIQUE**	**SISTEMA ELÉCTRICO**	**ELECTRISK SYSTEM**
SISTEMA DI ELETTRICO	**ELEKTRISCHES SYSTEME**	**SISTEMA ELÉCTRICA**	**ELEKTRISCH SYSTEEM**

SEC. 6

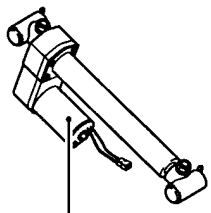

06.39

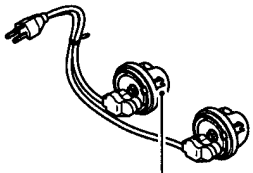

06.49
06.50

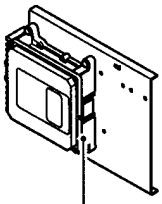

06.51

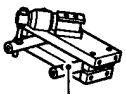

06.13

06.02

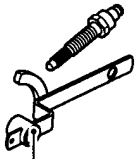

06.31

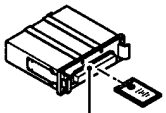

06.09
06.12

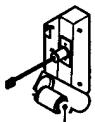

06.14

06.45
06.46

06.17
06.18
06.20
06.21
06.22
06.23
06.24
06.25
06.26
06.28
06.29

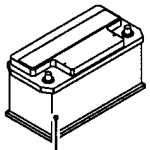

06.52
06.53

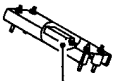

06.43
06.44

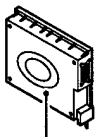

06.11

06.06

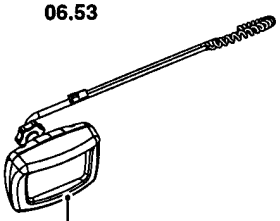

06.05

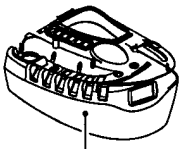

06.03
06.04

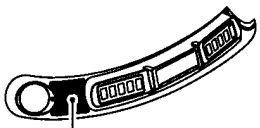

06.07

06.01
06.08
06.19
06.30
06.33
06.37
06.42
06.48
06.54
06.55
06.56

06.36
06.40
06.47

06.32

ссылка	Номер детали	Кол-во	Описание

HYDRAULIC SYSTEMS | **INSTALLATION HYDRAULIQUE** | **INSTALACIÓN HIDRÁULICA** | **HYDRAULIKANLÆG**

IMPIANTO IDRAULICA | **HYDRAULISCHE ANLAGE** | **INSTÁLAÇION HIDRÁULICA** | **HYDRAULISCH SYSTEEM**

SEC. 7

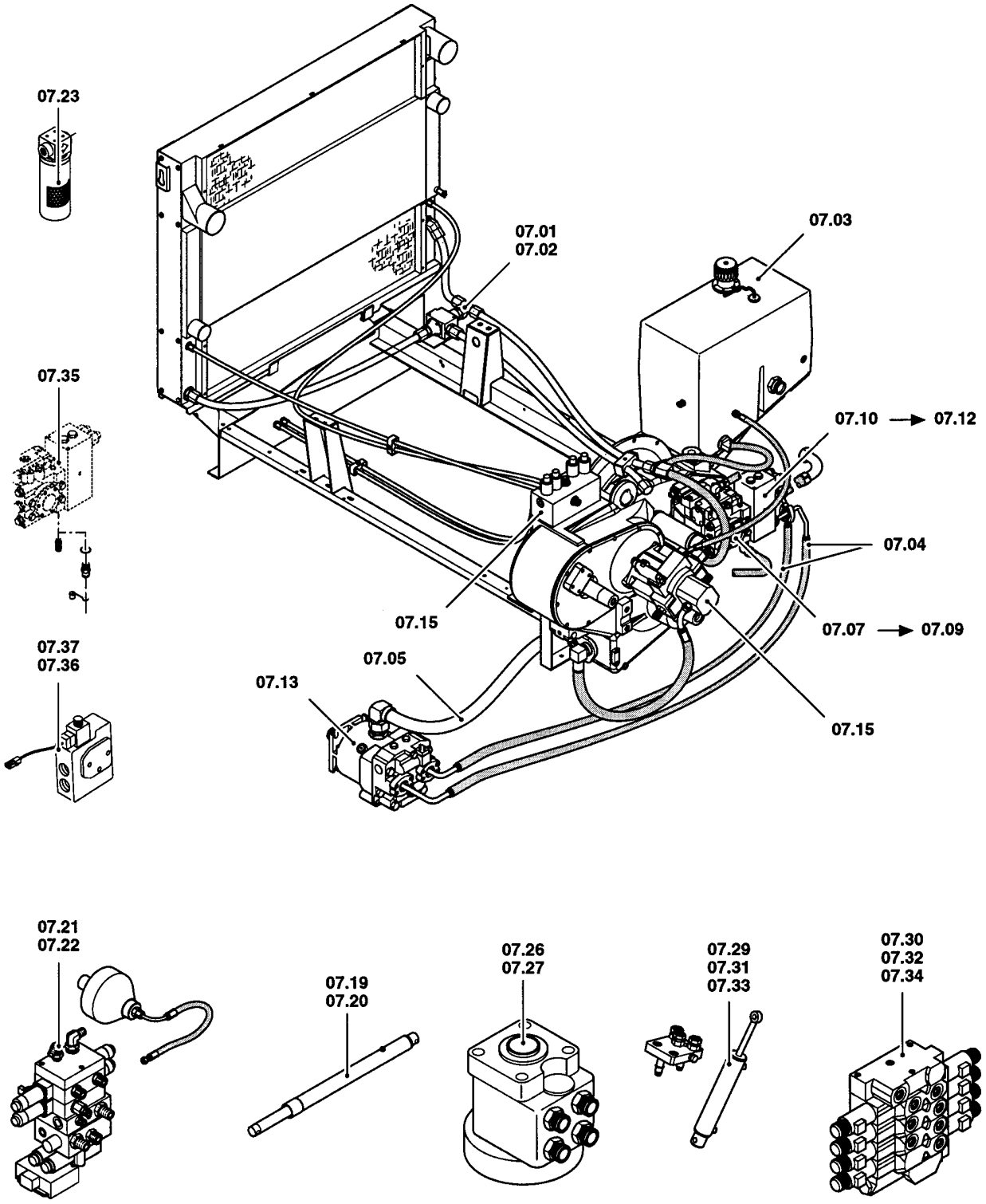

ссылка	Номер детали	Кол-во	Описание

SHEET METAL/DECALS	**REVÊTEMENTS EN TÔLE DÉCALCOMANIE**	**CHAPEADOS/CALCOMANÍAS**	**METALPLADEBEKLÆDN. MÆRKATER**
LAMIERATI DECALCOMANIE	**BLECHVERKLEIDUNGEN ABZIEHBILDER**	**REVESTIMENTOS EM CHAPAS/DECALCOMANIAS**	**METALEN PLATEN PLAKPLAATJES**

SEC. 8

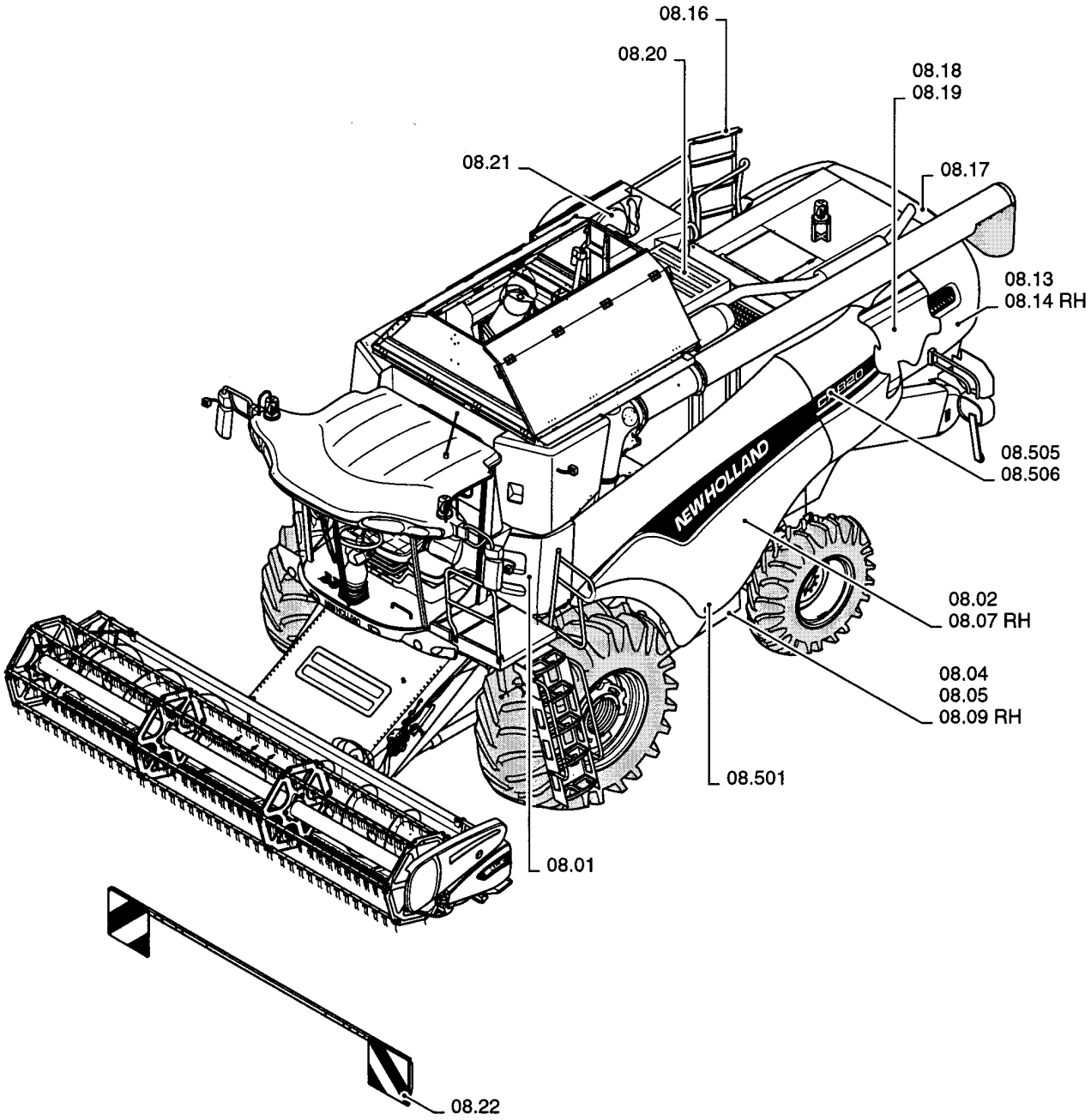

ссылка	Номер детали	Кол-во	Описание

CAB	**CABINE**	**CABINA**	**CAB**
CABINA	**KABINE**	**CABINA**	**CABINE**

SEC. 10

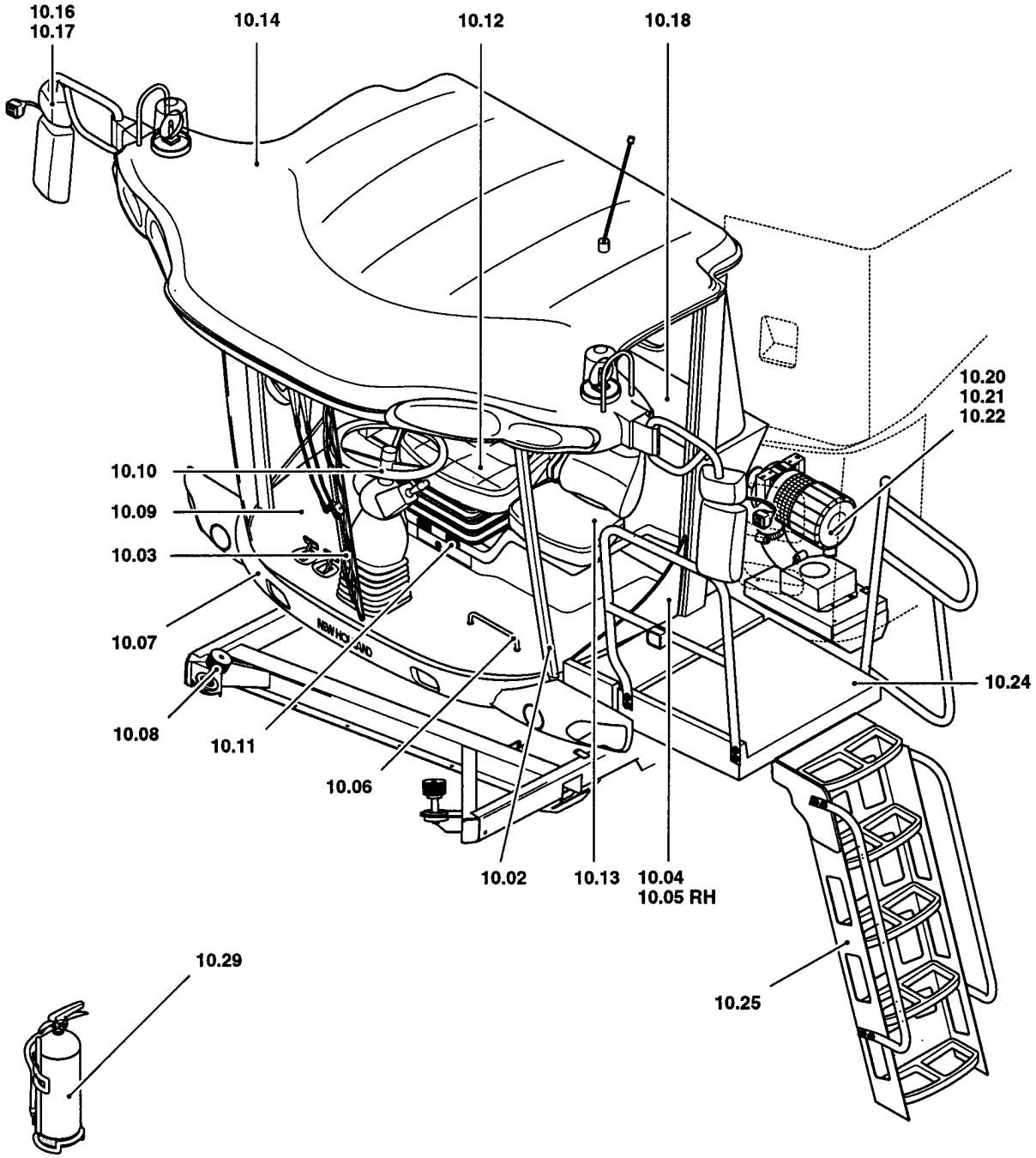

ссылка	Номер детали	Кол-во	Описание

WHEELS/TRACKS	**ROUES/CHENILLES**	**RUEDAS/ORUGAS**	**HJUL/BÆLTETRÆK**
RUOTI/CINGOLATURA	**RÄDER/RAUPENKETTEN**	**RODAS/RASTOS**	**WIELEN/RUPSBANDEN**

SEC. 11

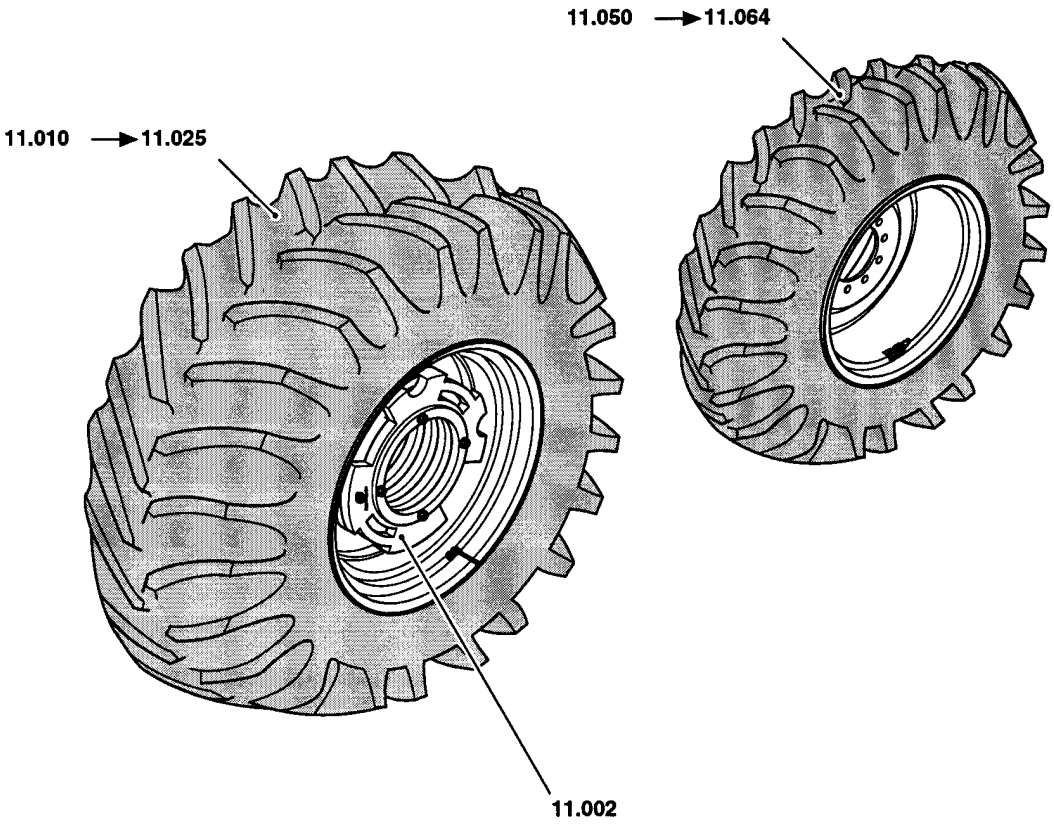

CX880 COMBINE - BASE UNIT (2/01-)

0.0027(01) SECTION LIST 11

ссылка	Номер детали	Кол-во	Описание

MAIN FRAME	**CHÂSSIS PRINCIPAL**	**BASTIDOR PRINCIPAL**	**HOVEDRAMME**
TELAIO PRINCIPALE	**HAUPTGESTELL**	**ESTRUTURA PRINCIPAL**	**HOOFDRAAM**

SEC. 12

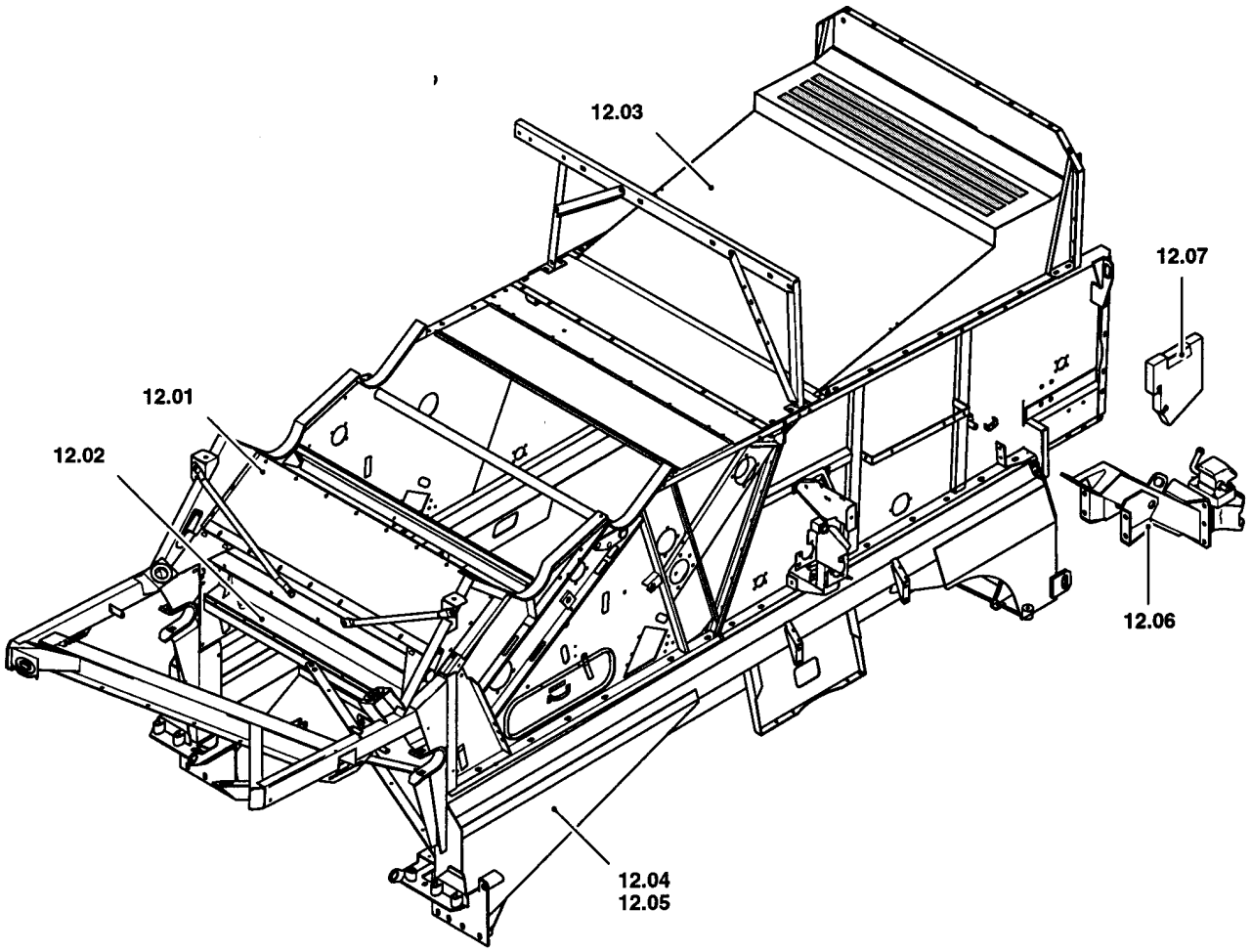

CX880 COMBINE - BASE UNIT (2/01-)

0.0028(01) SECTION LIST 12

ссылка	Номер детали	Кол-во	Описание

STRAW ELEVATOR	**ELEVATEUR DE PAILLE**	**ELEVADOR DE PAJA**	**HALMELEVATOR**
CANALE ELEVATORE PAGLIA	**STROHFÖRDERER**	**ELEVADOR DE PALHA**	**STRO-ELEVATOR**

SEC. 13

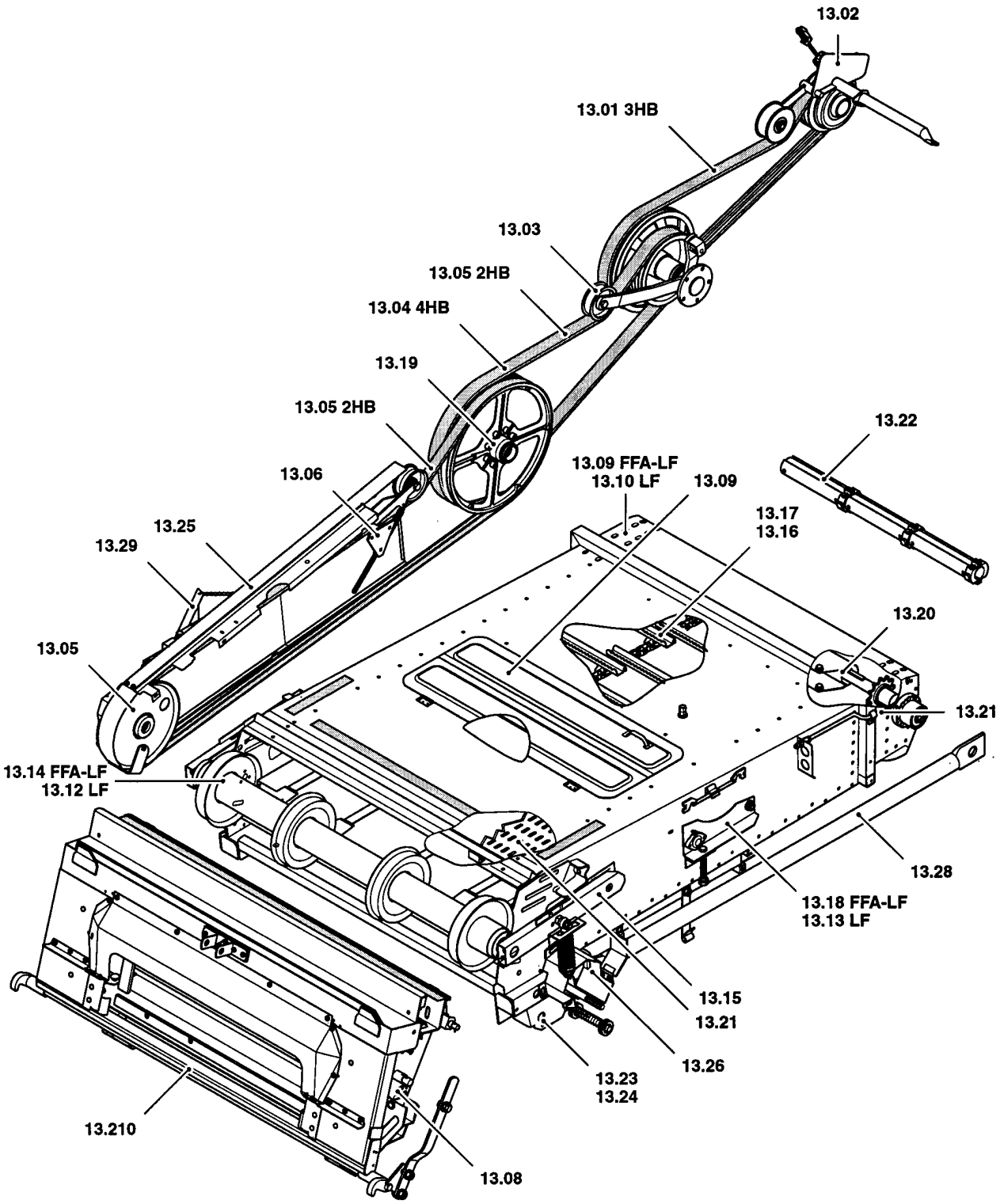

ссылка	Номер детали	Кол-во	Описание

THRESHING	**BATTAGE**	**TRILLA**	**TÆRSKNING**
TREBBIATURA	**DRUSCH**	**DEBULHA**	**DORSEN**

SEC. 14

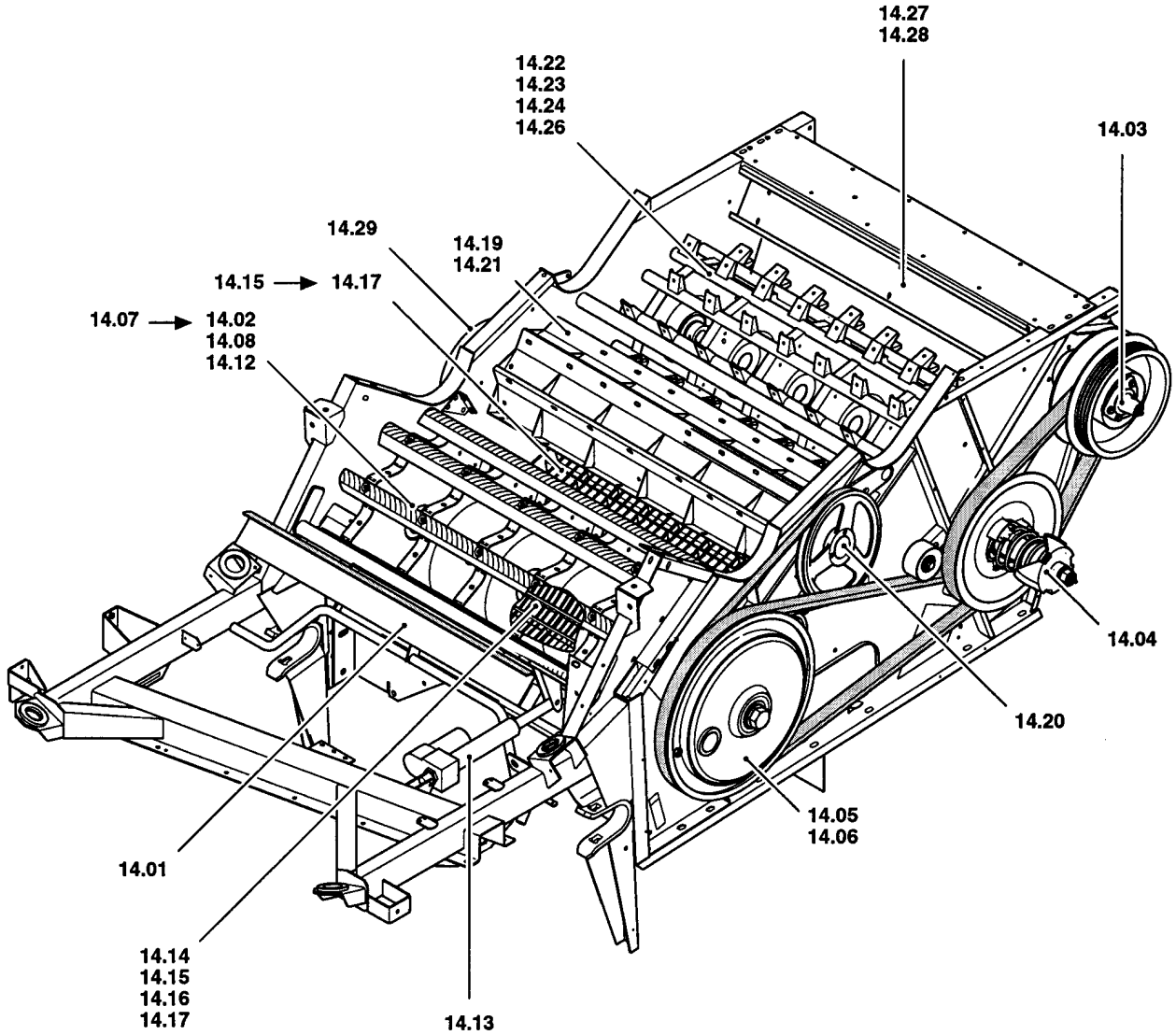

ссылка	Номер детали	Кол-во	Описание

CLEANING	**NETTOYAGE**	**LIMPIEZA**	**RENSNING**
PULITURA	**REINIGUNG**	**LIMPEZA**	**REINIGING`**

SEC. 15

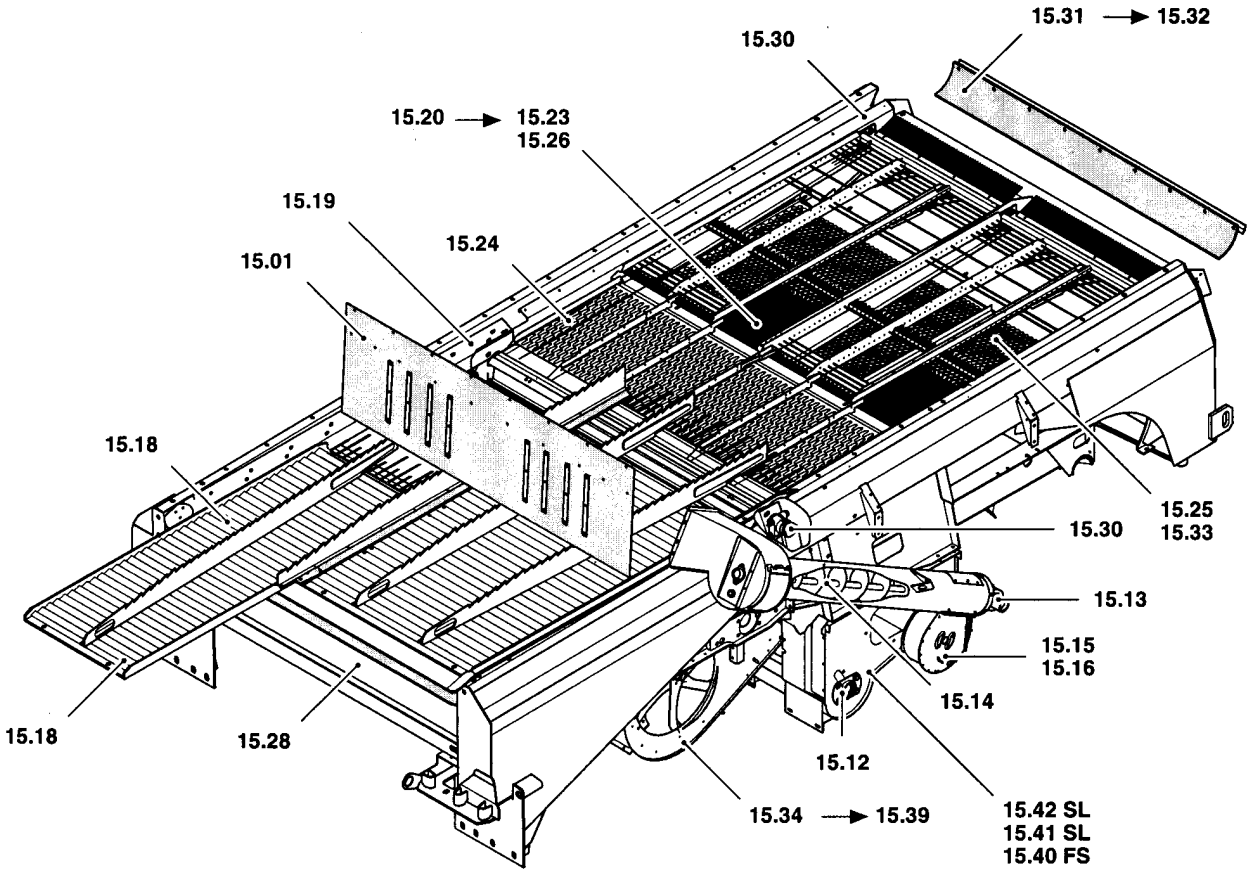

ссылка	Номер детали	Кол-во	Описание

CLEANING	**NETTOYAGE**	**LIMPIEZA**	**RENSNING**
PULITURA	**REINIGUNG**	**LIMPEZA**	**REINIGING**

SEC. 15

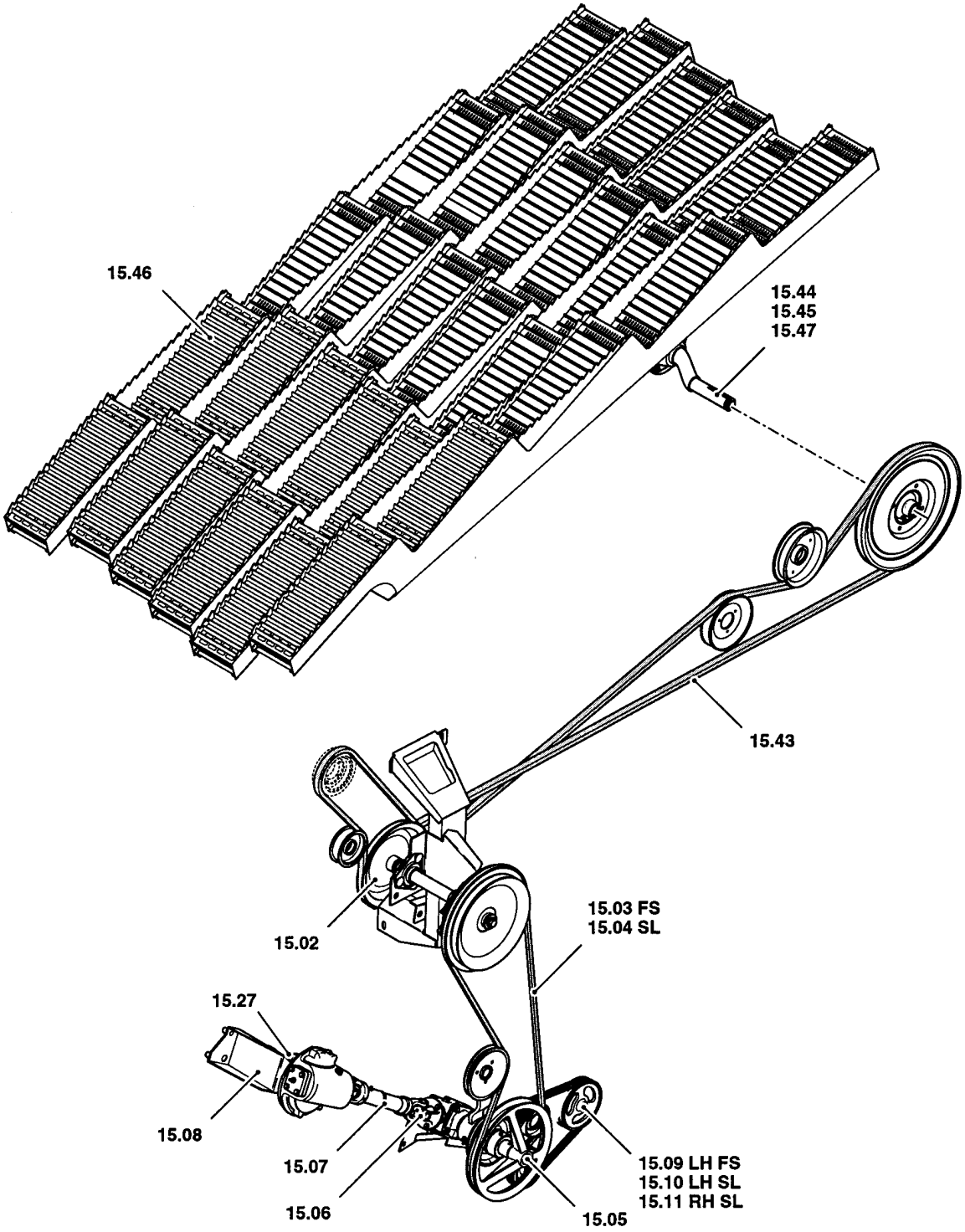

ссылка	Номер детали	Кол-во	Описание

UNLOADING	**VIDANGE**	**DESCARGA**	**TØMME**
SCARICO	**ENTLEERUNG**	**DESCARGA**	**ONTLADING**

SEC. 16

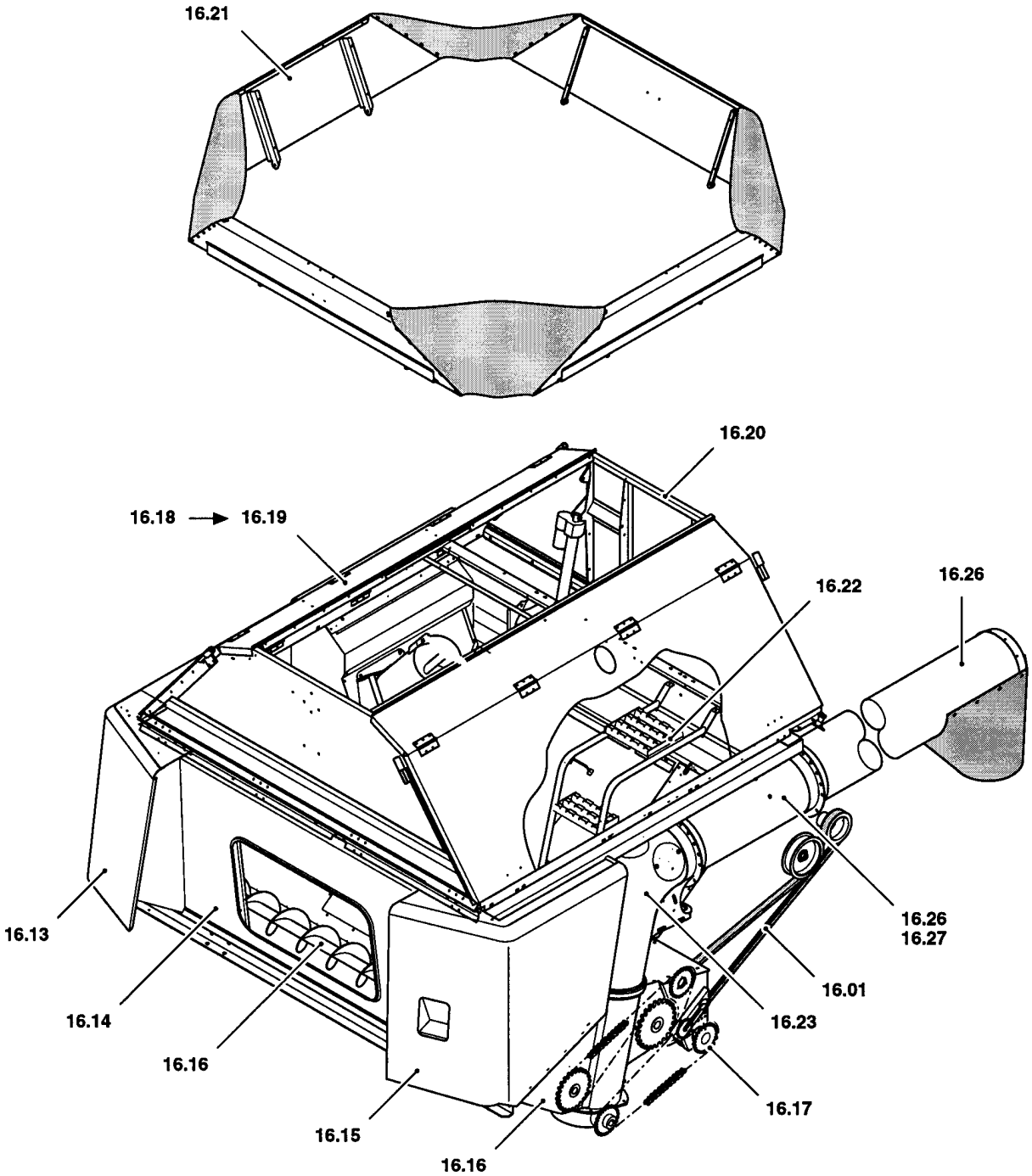

ссылка	Номер детали	Кол-во	Описание

UNLOADING	**VIDANGE**	**DESCARGA**	**TØMME**
SCARICO	**ENTLEERUNG**	**DESCARGA**	**ONTLADING**

SEC. 16

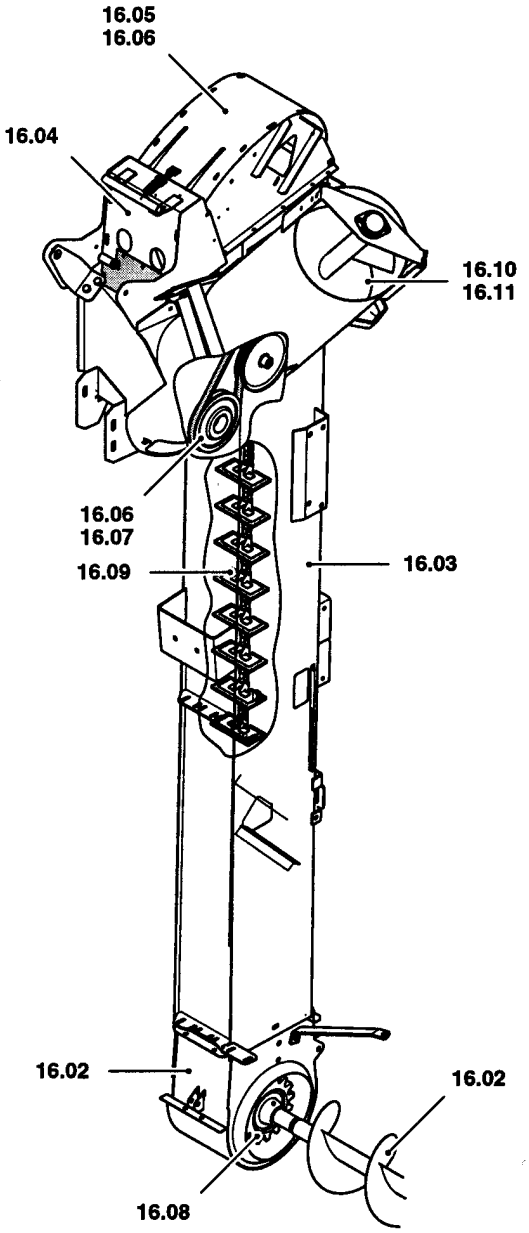

ссылка	Номер детали	Кол-во	Описание

ACCESSORIES	ACCESSOIRES	ACCESORIOS	TILBEHØR
ACCESSORI	ZUBEHÖR	ACESSORIOS	TOEBEHOREN

SEC. 18

ACCESSORIES

ссылка	Номер детали	Кол-во	Описание

ATTACHMENTS	**ACCESSOIRES**	**ACCESORIO**	**UDSTYR**
ACCESSORIO	**ZUBEHÖR**	**EQUIPAMENTOS**	**HULPSTUKKEN**

SEC. 19

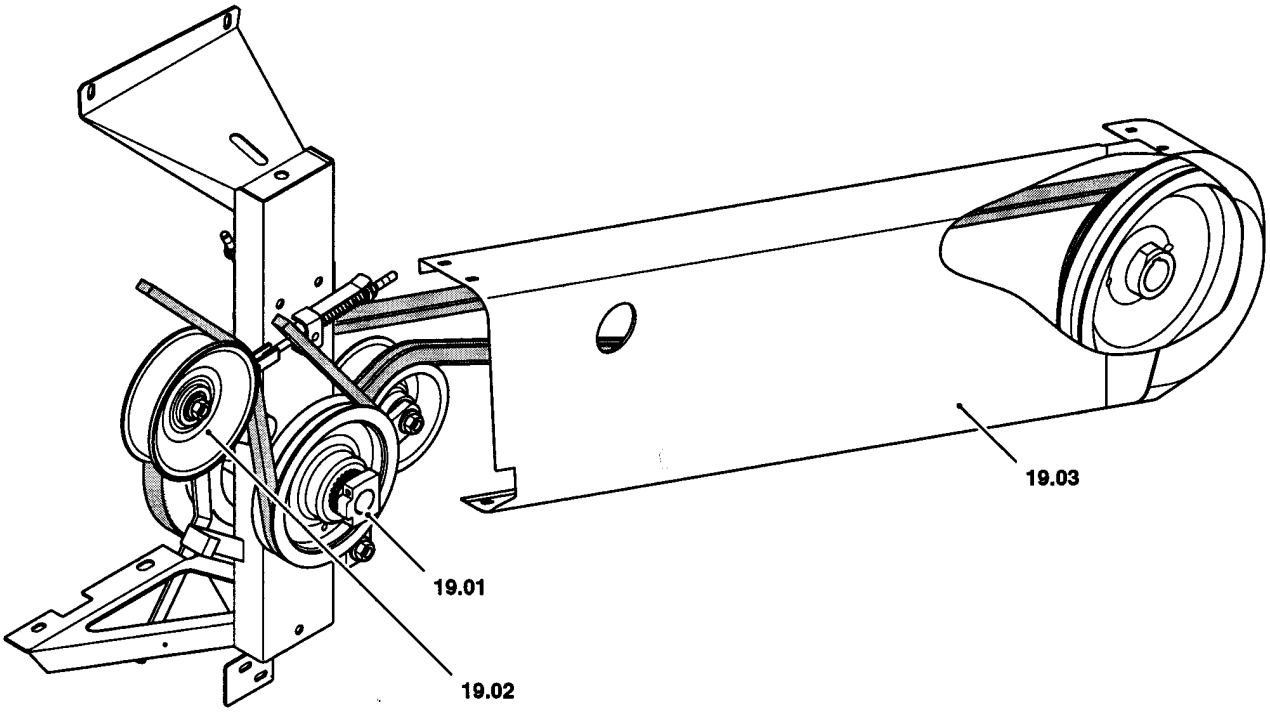

ссылка	Номер детали	Кол-во	Описание

ATTACHMENTS	**ACCESSOIRES**	**ACCESORIO**	**UDSTYR**
ACCESSORIO	**ZUBEHÖR**	**EQUIPAMENTOS**	**HULPSTUKKEN**

SEC. 19

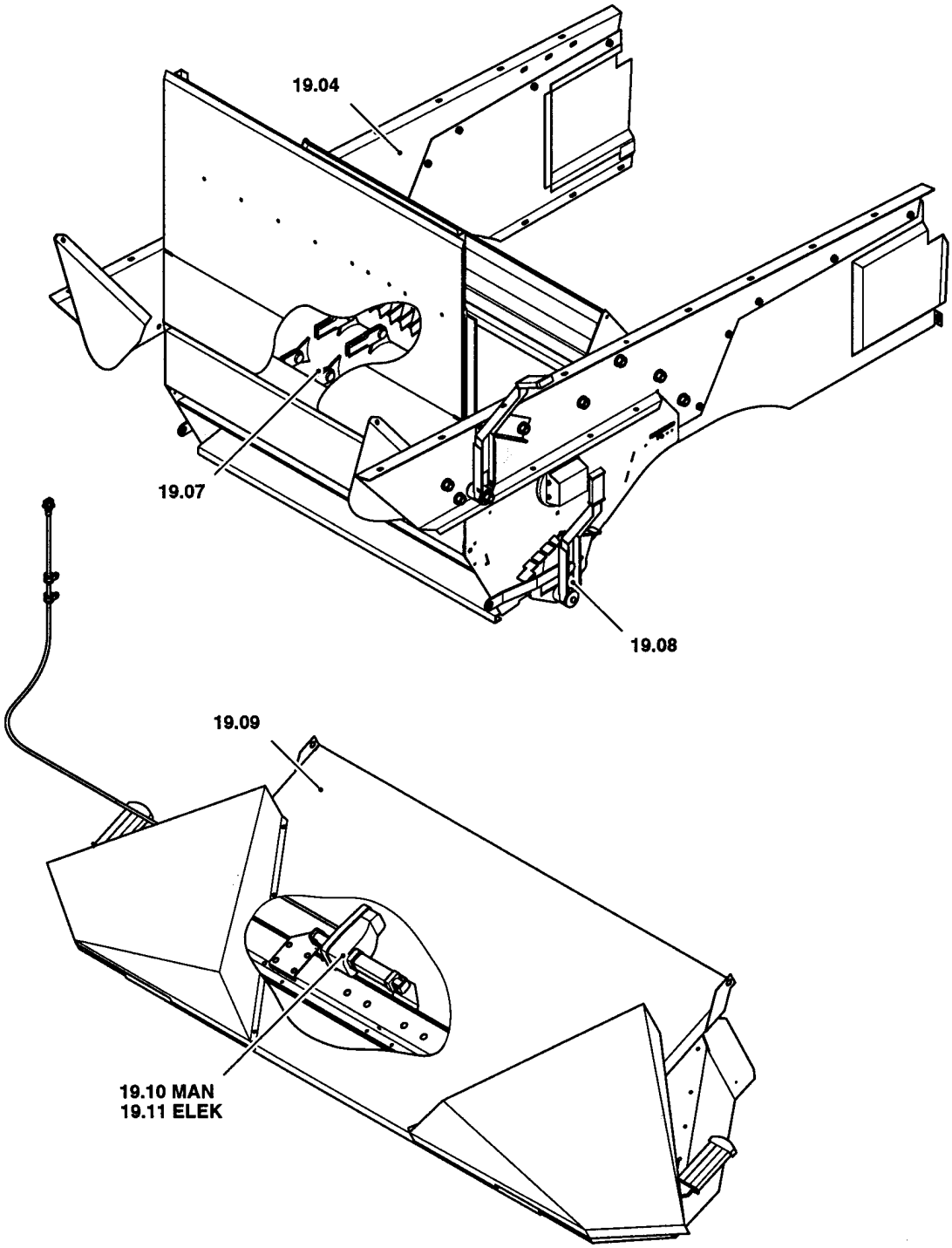

ссылка	Номер детали	Кол-во	Описание

ATTACHMENTS	**ACCESSOIRES**	**ACCESORIO**	**UDSTYR**
ACCESSORIO	**ZUBEHÖR**	**EQUIPAMENTOS**	**HULPSTUKKEN**

SEC. 19

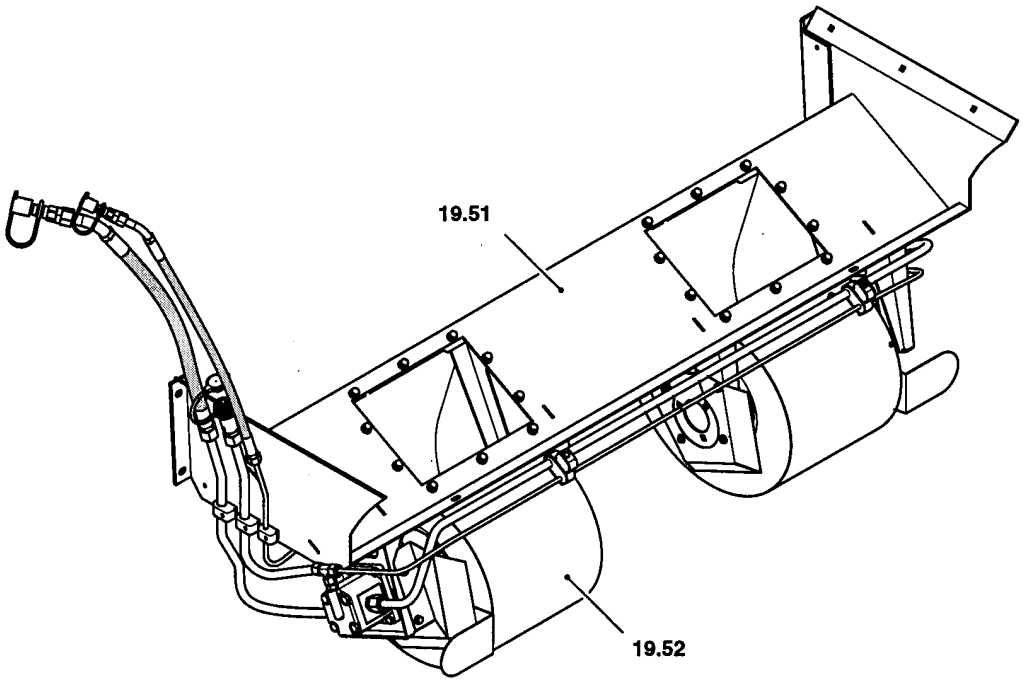

ссылка	Номер детали	Кол-во	Описание

HEADERS	**BEC CUEILLEUR**	**BARRA**	**SKÆREBORDE**
BARRA	**SCHNEIDWERK**	**CABEÇALHO DE CEIFA**	**MAAIBORDEN**

SEC. 20

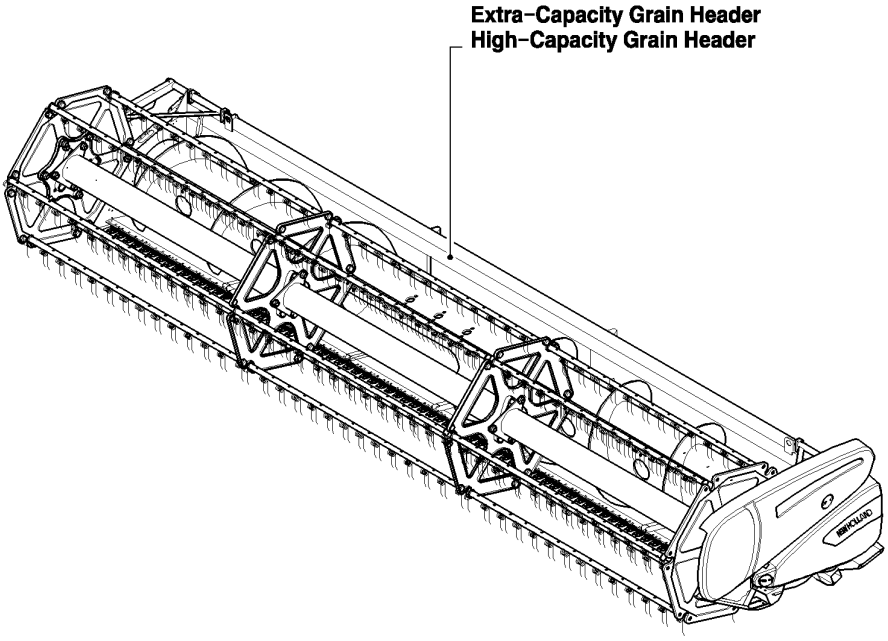

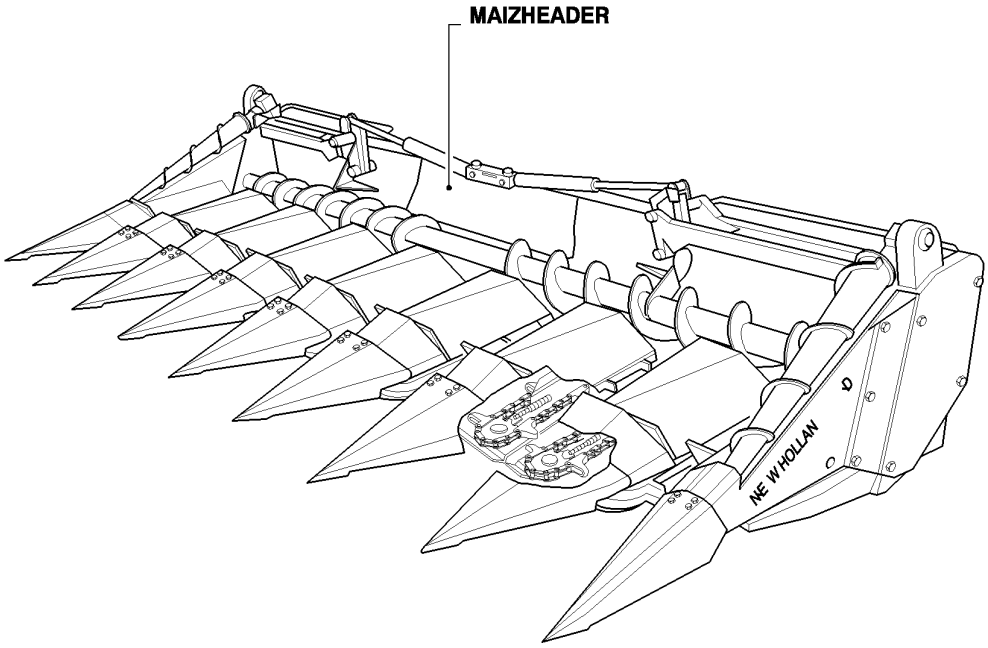

CX880 COMBINE - BASE UNIT (2/01-)

0.0036(01) SECTION LIST 20

ссылка	Номер детали	Кол-во	Описание

VERSION LIST
ELENCO VERSIONI
LISTE DE VERSION
VERZEICHNIS DER VERSIONEN

LISTA DE VERSIONES
LISTA DAS VERSÕES
TYPELISTE
LIJST VAN VERSIES

Vehicle Modello Modele Modells	Modelo Modelo Model Model	Chassi Telaio Chassis Fahrgestell	Chasis Armação Stativ Raam	Engine Motore Moteur Motor	Motor Motor Motor Motor
CX720		201 ...		675 TA/CC	
CX720		201 ...		675 TA/AG	
CX740		211 ...		675 TA/CB	
CX740		211 ...		675 TA/AH	
CX760		221 ...		675 TA/CF	
CX760		221 ...		675 TA/AJ	
CX780		231 ...		675 TA/CA	
CX780		231 ...		675 TA/AB	
CX820		331 ...		675 TA/CA	
CX820		331 ...		675 TA/AJ	
CX840		301 ...		675 TA/AB	
CX860		311 ...		F2B E0684A*B002	
CX860		311 ...		F2B E0684A*B003	
CX880		321 ...		F3A E0684G*B003	
CX880		321 ...		F3A E0684G*B004	

CX880 COMBINE - BASE UNIT (2/01-)

0.0037(01) VERSION LIST

ссылка	Номер детали	Кол-во	Описание

IDENTIFICATION PLATES
TARGHETTE DI IDENTIFICAZIONE
PLAQUES D'IDENTIFICATION
TYPENSCHILDER

PLACAS DE IDENTIFICACIÓN
CHAPAS DE IDENTIFICAÇÃO
IDENTIFIKATIONSPLADER
IDENTIFICATIEPLATEN

VEHICLE IDENTIFICATION
IDENTIFICAZIONE MODELLO
IDENTIFICATION MODELE
KENNZEICHEN MODELLS
IDENTIFICACION MODELO
IDENTIFICAÇÃO DO MODELO
MODELKENDINGSPLADE
MODELIDENTIFICATIE

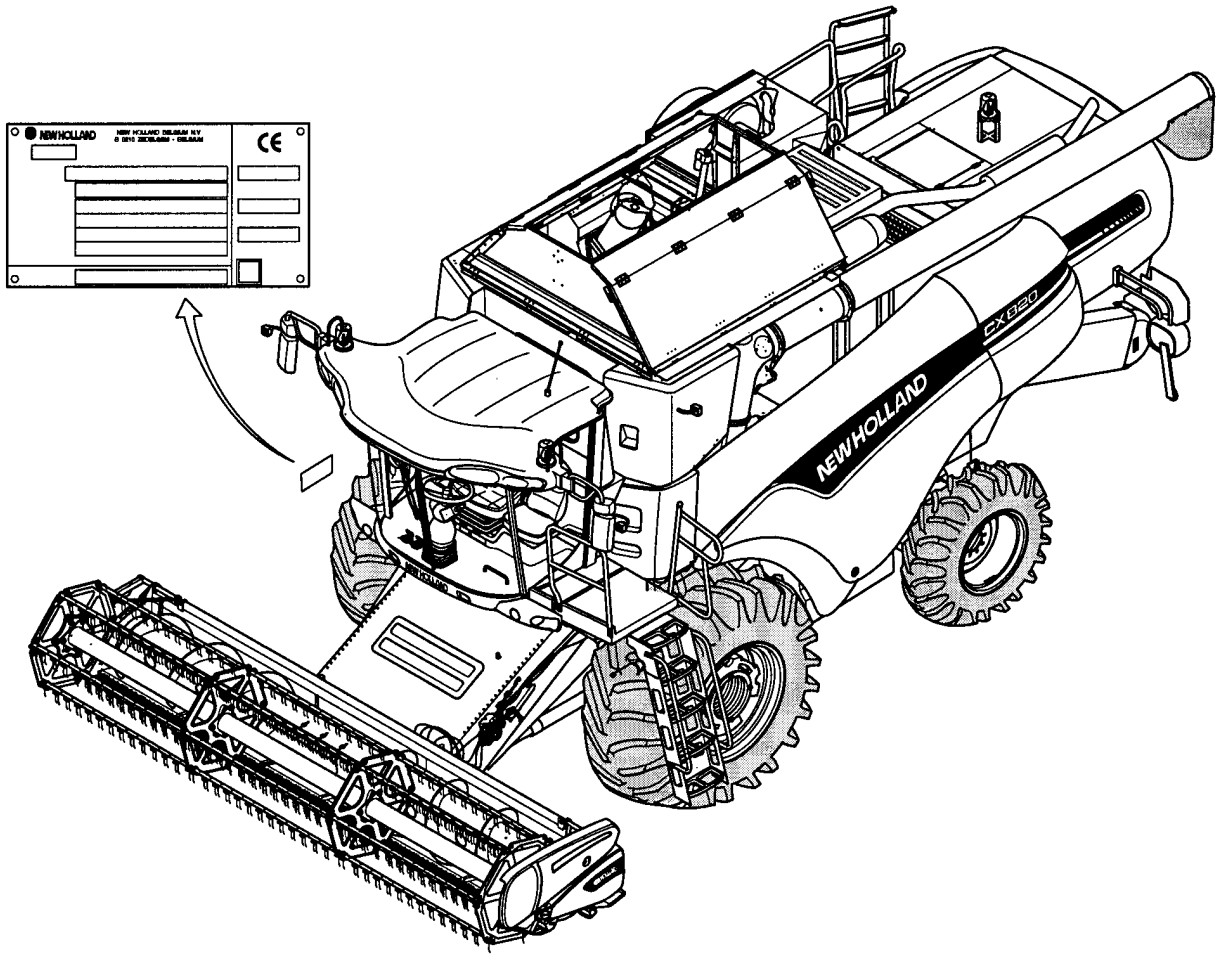

CX880 COMBINE - BASE UNIT (2/01-)

0.0038(01) IDENTIFICATION PLATES

ссылка	Номер детали	Кол-во	Описание

MAINTENANCE PARTS
PARTICOLARI PER LA MANUTENZIONE
PIECES DE MAINTENANCE
TEILE FÜR DIE INSTANDHALTUNG

PIEZAS DE MANTENIMIENTO
PEÇAS DE MANUTENÇÃO
VEDLIGEHOLDELSESDELE
ONDERDELEN VOOR ONDERHOUD

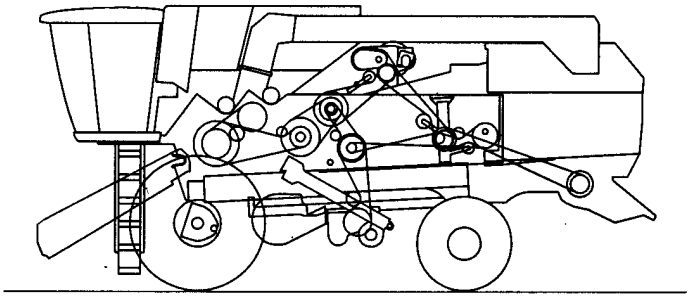

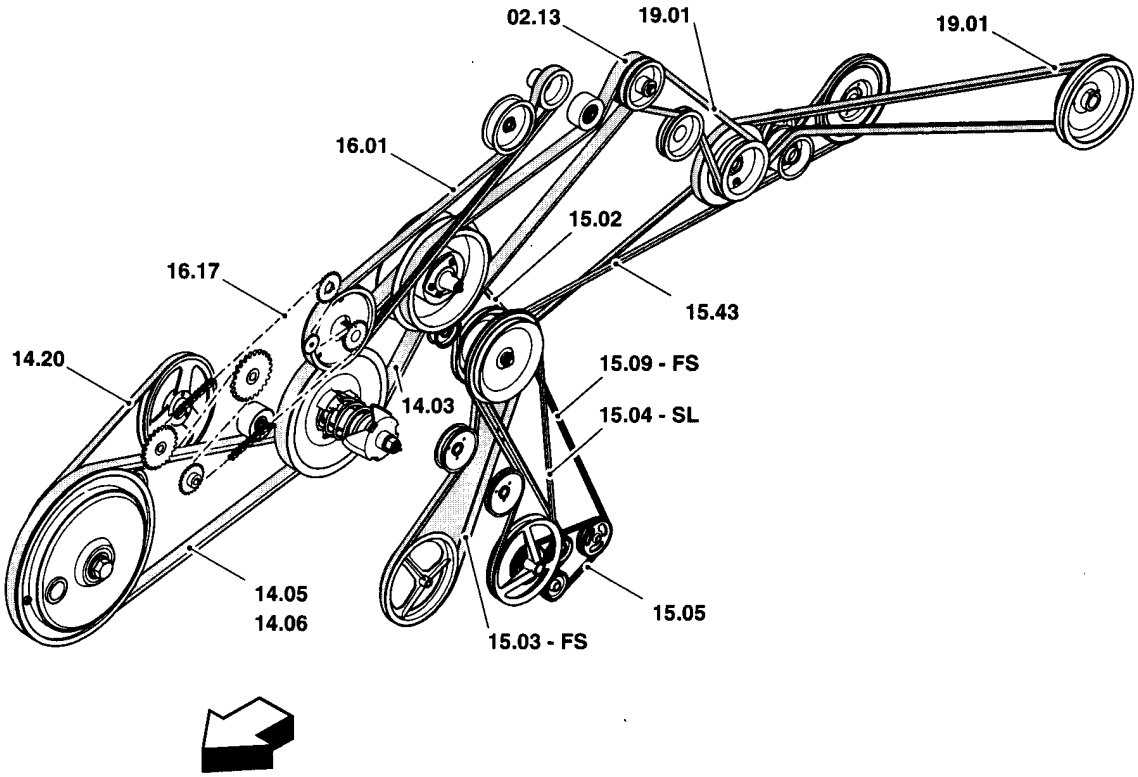

CX880 COMBINE - BASE UNIT (2/01-)

0.0039(01) MAINTENANCE PARTS

ссылка	Номер детали	Кол-во	Описание

MAINTENANCE PARTS
PARTICOLARI PER LA MANUTENZIONE
PIECES DE MAINTENANCE
TEILE FÜR DIE INSTANDHALTUNG

PIEZAS DE MANTENIMIENTO
PEÇAS DE MANUTENÇÃO
VEDLIGEHOLDELSESDELE
ONDERDELEN VOOR ONDERHOUD

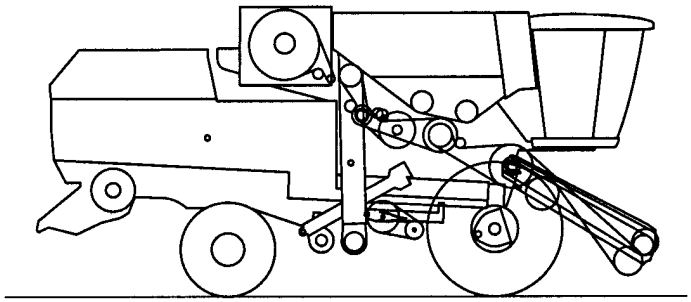

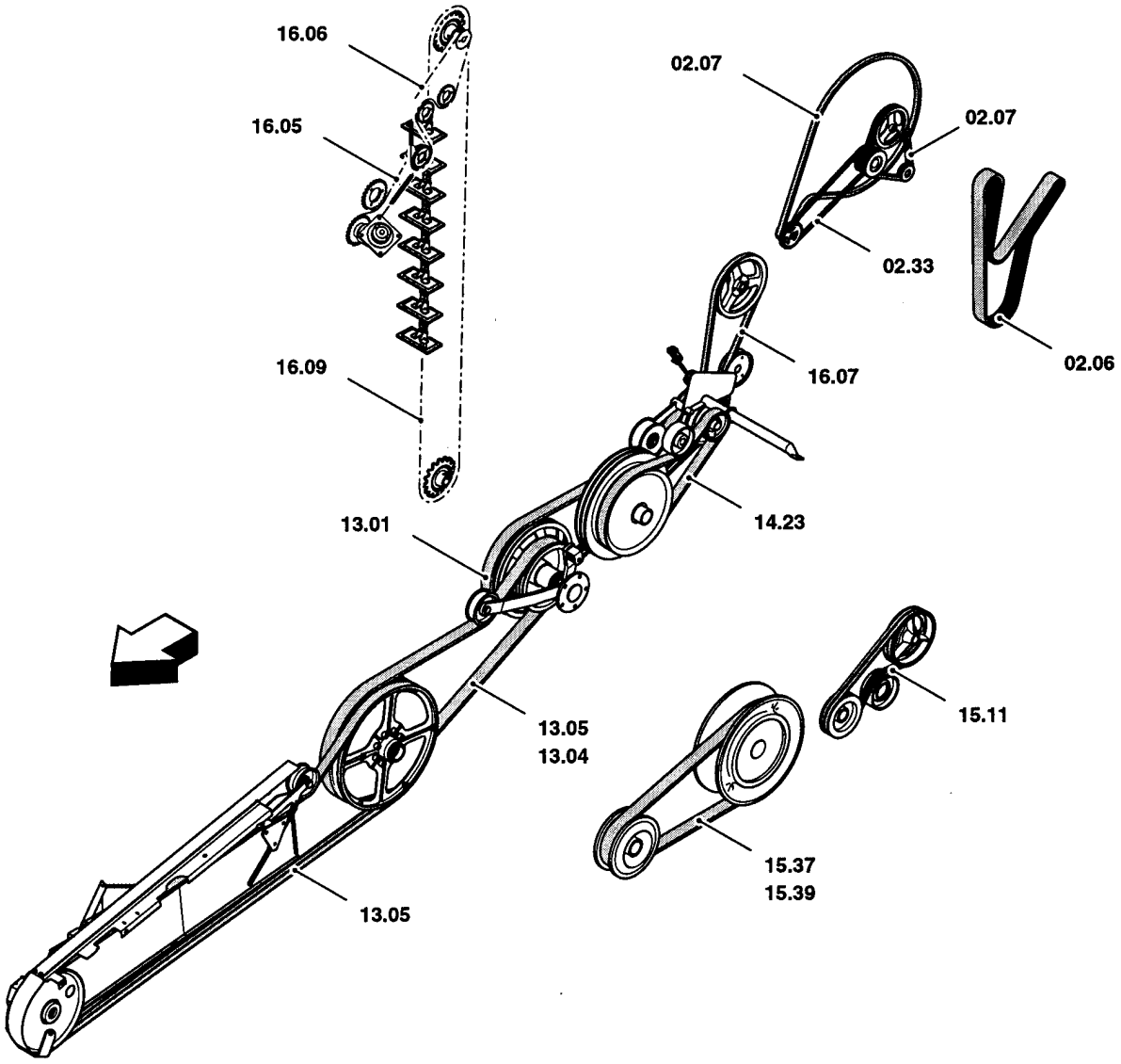

CX880 COMBINE - BASE UNIT (2/01-)

0.0039A(01) MAINTENANCE PARTS

ссылка	Номер детали	Кол-во	Описание

0.0039B(01) SERVICE MAINTENANCE KIT

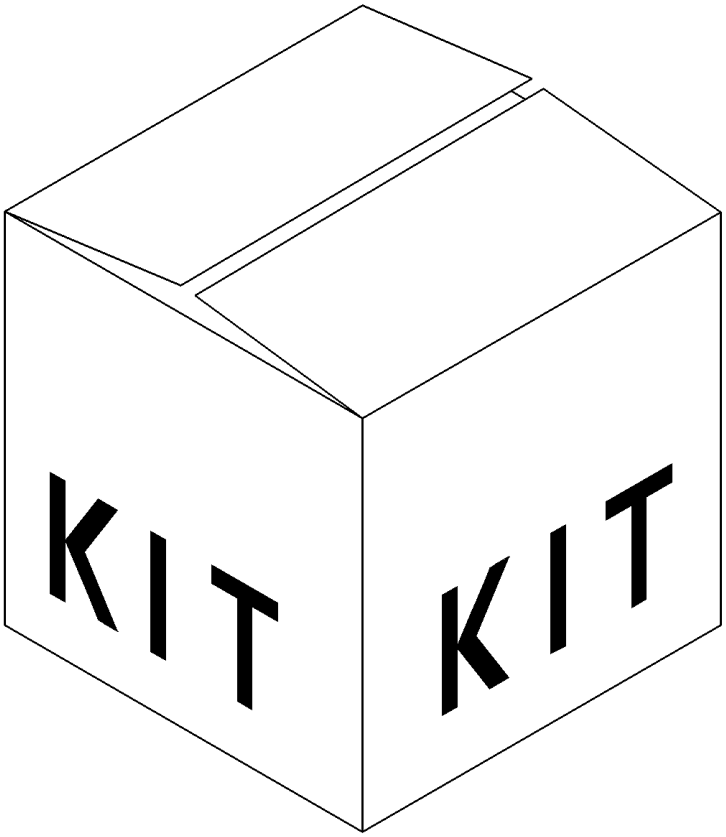

CX880 COMBINE - BASE UNIT (2/01-)

0.0039B(01) SERVICE MAINTENANCE KIT

ссылка	Номер детали	Кол-во	Описание
1	73317598	1	, 600 hrs, FOR CX720, CX740, CX760, CX780, CX820, CX840 ONLY
1	73317599	1	, 600 hrs, FOR CX860 ONLY
1	73317600	1	, 600 hrs, FOR CX880 ONLY
2	73317601	1	, 1 year, FOR CX720, CX740, CX760, CX780 ONLY
2	73317602	1	, 1 year, FOR CX820, CX840 ONLY
2	73317603	1	, 1 year, FOR CX860 ONLY
2	73317604	1	, 1 year, FOR CX880 ONLY

CODE TABLE
TABELLA CODICI
TABLE DES CODES
KODETABELLE

TABLA DE CÓDIGOS
TABELA DE CÓDIGOS
KODESKEMA
CODETABEL

Rules for modification codes

Identify the 3 mid digits (=SERIES) of the serial number of your machine. Eg.: 165**102**032

Modification codes begin with:
C for a part number valid UNTIL series ...,
F for a part number valid FROM series ... UNTIL series ...,
D for a part number valid FROM series ... ONWARDS.

Example:
C092: part number valid until series 092
F093109: part number valid between series 093 and 109
D110: part number valid from series 110 onwards
If your machine has serial number 165**102**032, choose the second part number in our example since 102 is between 093 and 109.

CODE	CX720 -- =201	CX740 -- =211	CX760 -- =221	CX780 -- =231
C225	--206001 to --225999	--206001 to --225999	--206001 to --225999	--206001 to --225999
C237	--206001 to --237999	--206001 to --237999	--206001 to --237999	--206001 to --237999
C241	--206001 to --241999	--206001 to --241999	--206001 to --241999	--206001 to --241999
C245	--206001 to --245999	--206001 to --245999	--206001 to --245999	--206001 to --245999
D226	--226001	--226001	--226001	--226001
D238	--238001	--238001	--238001	--238001
D242	--242001	--242001	--242001	--242001
.....	.....	.....	.....	.....

CODE	CX820 -- =331	CX840 -- =301	CX860 -- =311	CX880 -- =321
C225	--206001 to --225999	--206001 to --225999	--206001 to --225999	--206001 to --225999
C237	--206001 to --237999	--206001 to --237999	--206001 to --237999	--206001 to --237999
C241	--206001 to --241999	--206001 to --241999	--206001 to --241999	--206001 to --241999
C245	--206001 to --245999	--206001 to --245999	--206001 to --245999	--206001 to --245999
D226	--226001	--226001	--226001	--226001
D238	--238001	--238001	--238001	--238001
D242	--242001	--242001	--242001	--242001
.....	.....	.....	.....	.....

CX880 COMBINE - BASE UNIT (2/01-)

0.0041(01) CODE TABLE

ссылка	Номер детали	Кол-во	Описание

ENGINE	**MOTEUR**	**MOTOR**	**MOTOR**
MOTORE	**MOTOR**	**MOTOR**	**MOTOR**

SEC. 1

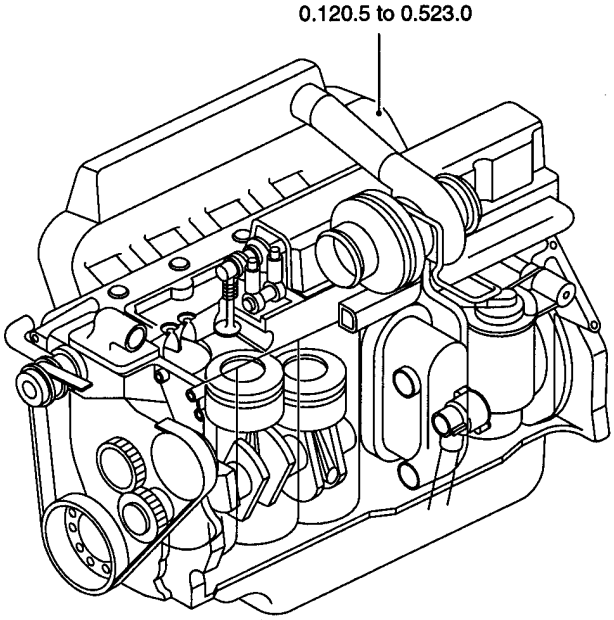

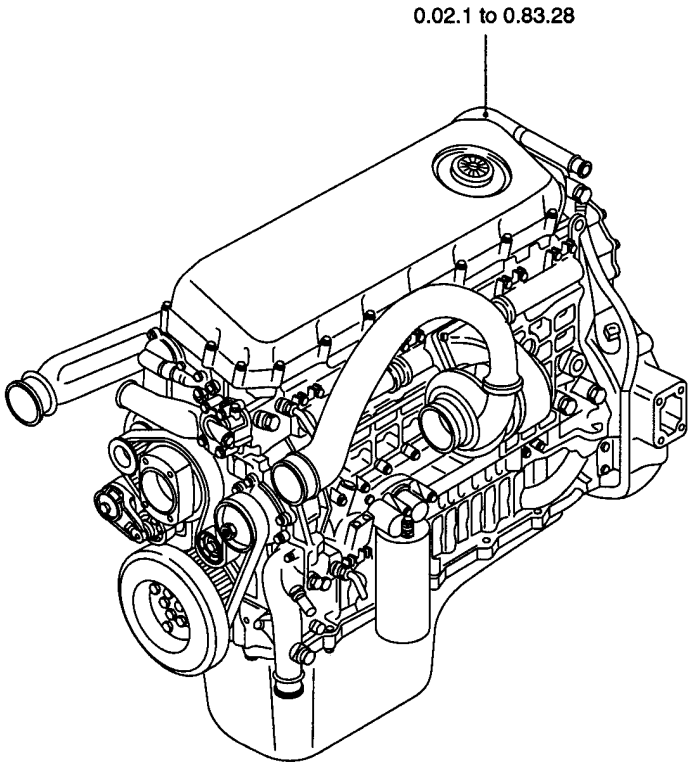

ссылка	Номер детали	Кол-во	Описание

01.001(01) COMPLETE ENGINE

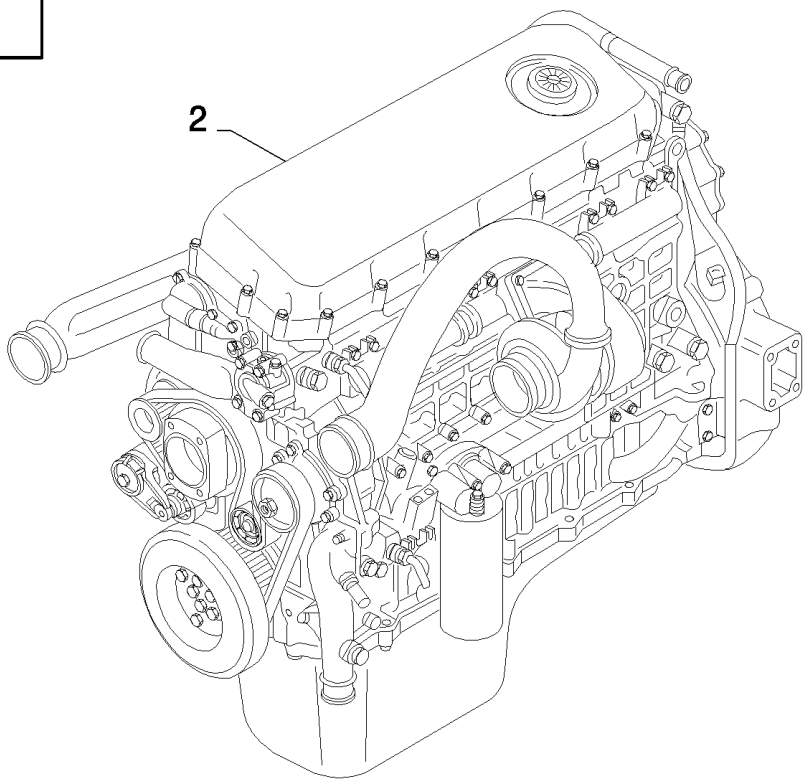

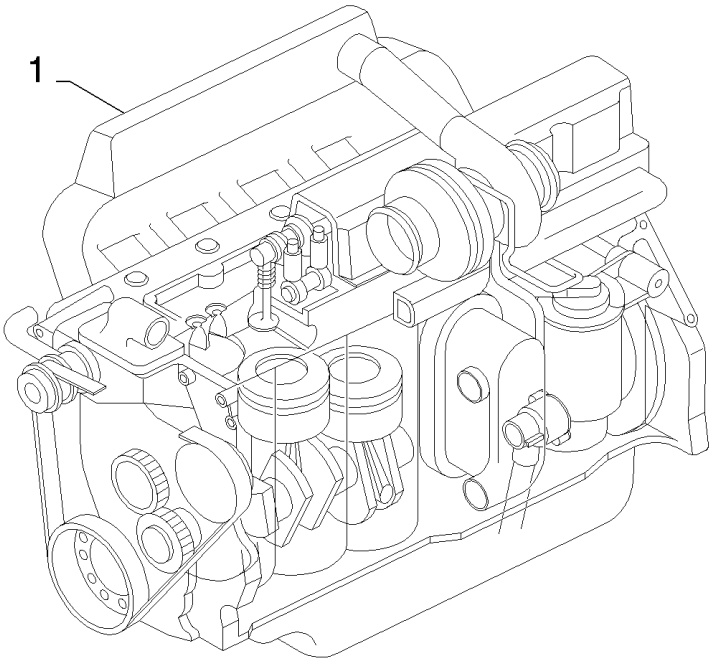

CX880 COMBINE - BASE UNIT (2/01-)

01.001(01) COMPLETE ENGINE

ссылка	Номер детали	Кол-во	Описание
1	87801856	1	ENGINE, CX720, SEE ENGINE MODEL 675 TA/CC, BSN C347
1	87803219	1	ENGINE, CX720, SEE ENGINE MODEL 675 TA/AG, ASN D348
1	87801857	1	ENGINE, CX740, SEE ENGINE MODEL 675 TA/CB, BSN C347
1	87803270	1	ENGINE, CX740, SEE ENGINE MODEL 675 TA/AH, ASN D348
1	87802071	1	ENGINE, CX760, SEE ENGINE MODEL 675 TA/CF, BSN C347
1	87803271	1	ENGINE, CX760, SEE ENGINE MODEL 675 TA/AJ, ASN D348
1	87801859	1	ENGINE, CX780, SEE ENGINE MODEL 675 TA/CA, BSN C323
1	87801858	1	ENGINE, CX780, SEE ENGINE MODEL 675 TA/AB, ASN D324
1	87801859	1	ENGINE, CX820, SEE ENGINE MODEL 675 TA/CA, BSN C347
1	87803271	1	ENGINE, CX820, SEE ENGINE MODEL 675 TA/AJ, ASN D348
1	87801858	1	ENGINE, CX840, SEE ENGINE MODEL 675 TA/AB
2	84053371	1	ENGINE, CX860, SEE ENGINE MODEL F2B E0684A*B002, BSN C347
2	84819473	1	ENGINE, CX860, SEE ENGINE MODEL F2B E0684A*B003, ASN D348
2	84072645	1	ENGINE, CX880, SEE ENGINE MODEL F3A E0684G*B003, BSN C347
2	84819472	1	ENGINE, CX880, SEE ENGINE MODEL F3A E0684G*B004, ASN D348

ENGINE EQUIPMENT	**EQUIPEMENT MOTEUR**	**EQUIPO MOTOR**	**MOTORUDSTYR**
EQUIPAGGIAMENTO MOTORE	**MOTORAUSRÜSTUNG**	**EQUIPAMENTO DO MOTOR**	**MOTORUITRUSTING**

SEC. 2

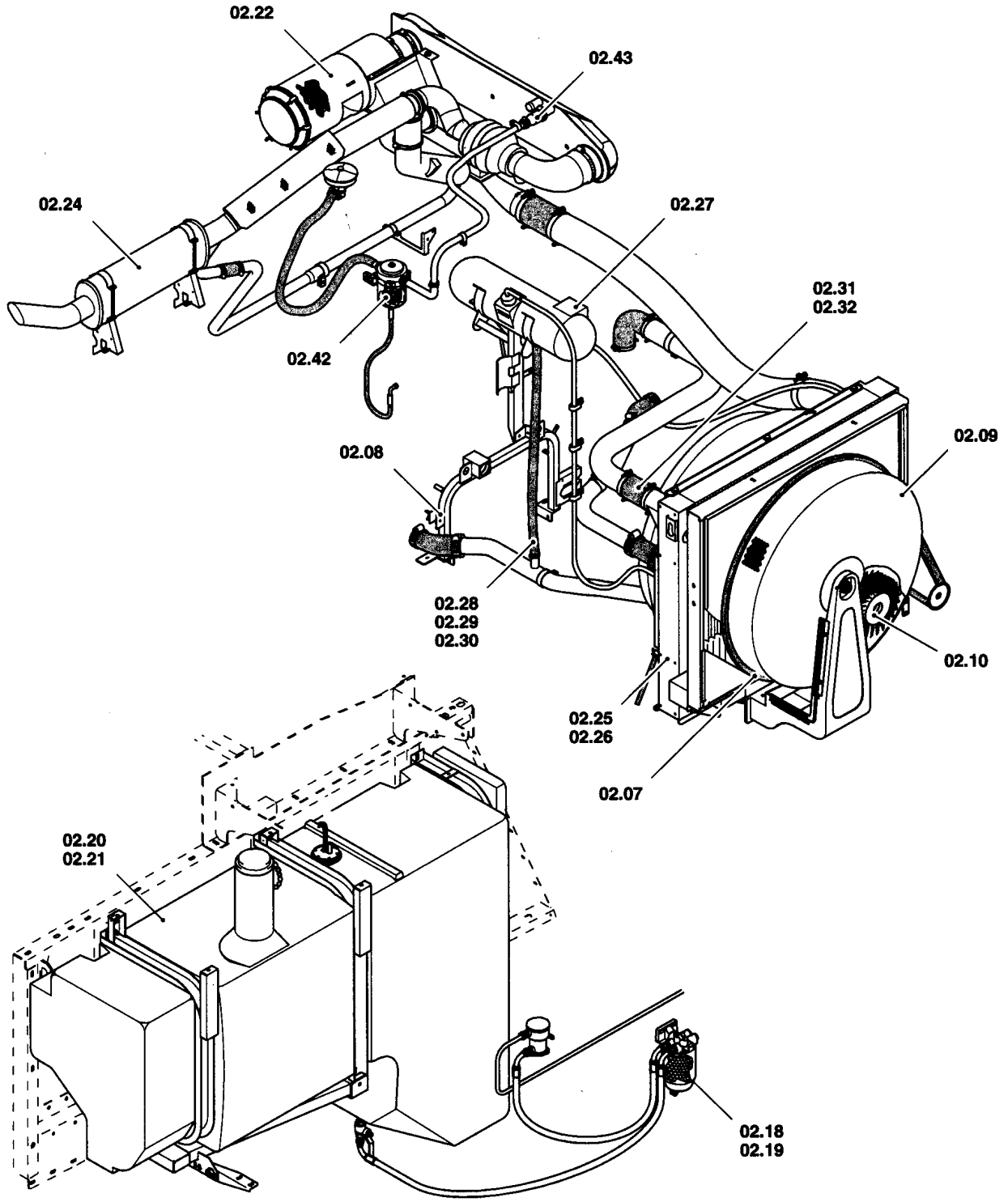

ссылка	Номер детали	Кол-во	Описание

ENGINE EQUIPMENT	**EQUIPEMENT MOTEUR**	**EQUIPO MOTOR**	**MOTORUDSTYR**
EQUIPAGGIAMENTO MOTORE	**MOTORAUSRÜSTUNG**	**EQUIPAMENTO DO MOTOR**	**MOTORUITRUSTING**

SEC. 2

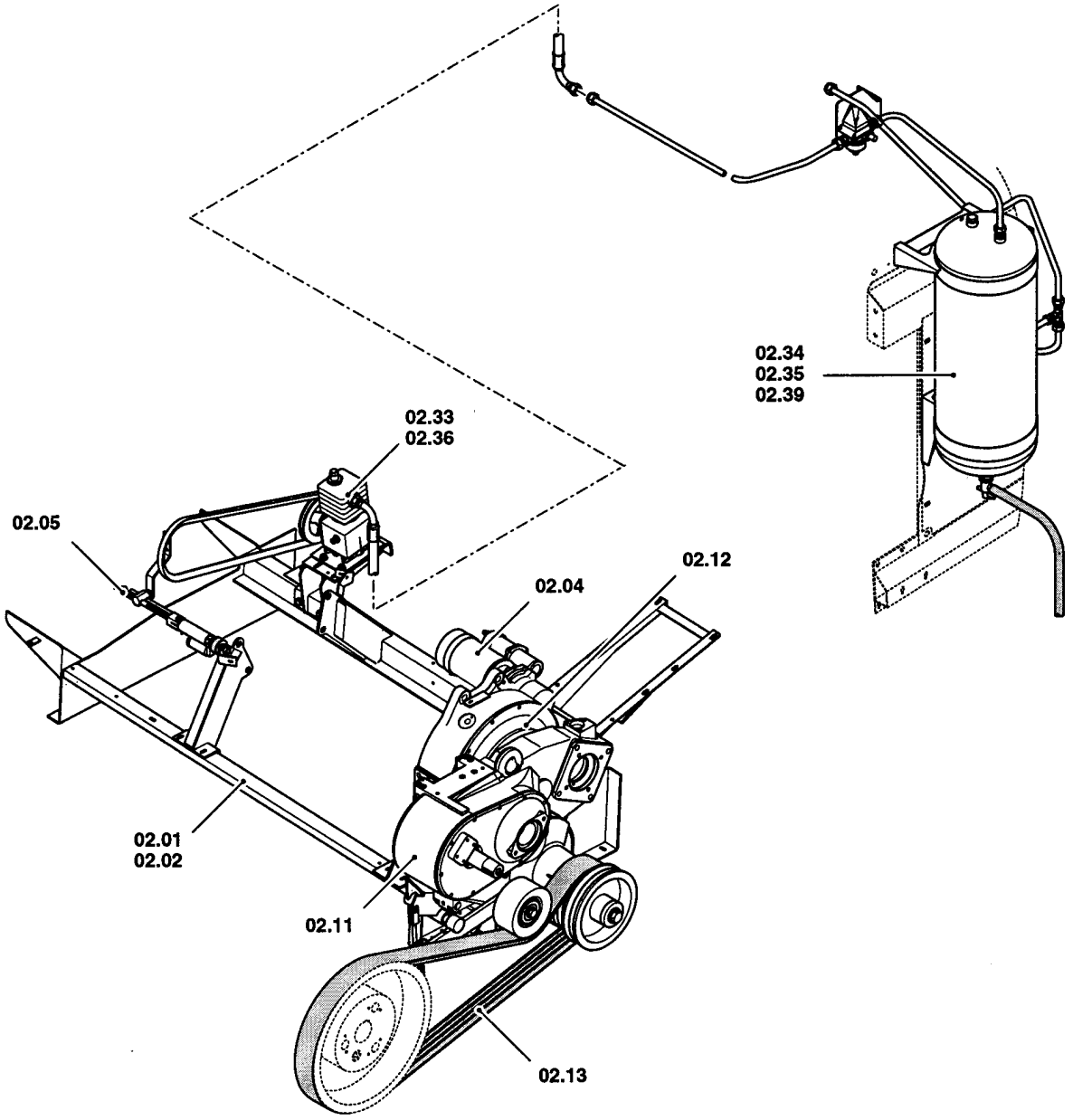

ссылка	Номер детали	Кол-во	Описание

CX880 COMBINE - BASE UNIT (2/01-)

02.02(01) ENGINE SUPPORTS

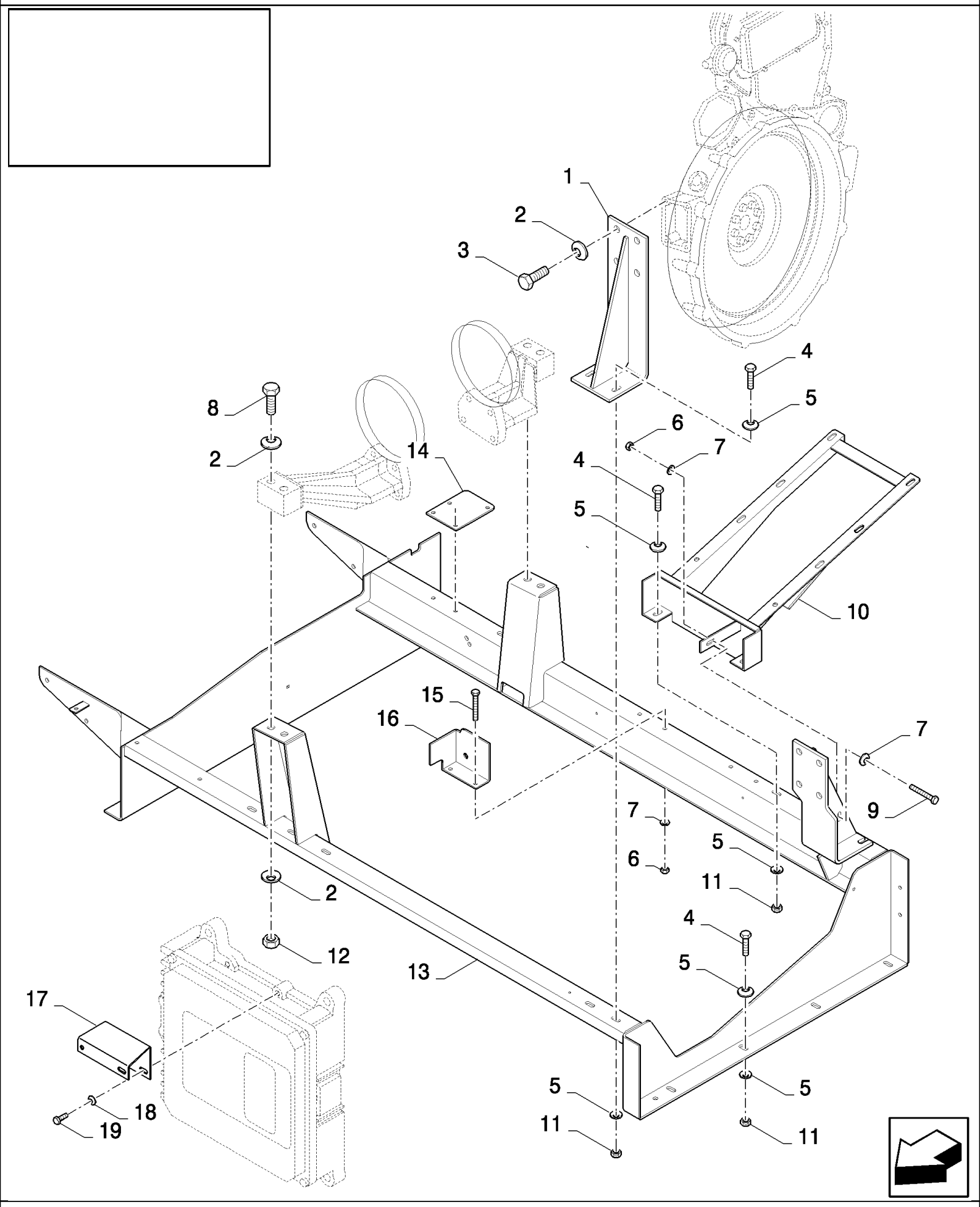

CX880 COMBINE - BASE UNIT (2/01-)

02.02(01) ENGINE SUPPORTS

ссылка	Номер детали	Кол-во	Описание
1	84071303	1	SUPPORT,
2	140048	16	WASHER, SPRING, Belleville, M16,
3	86508583	8	BOLT, Hex, M16 x 35, 8.8,
4	9706704	13	BOLT, Hex, M10 x 35, 8.8, Full Thd,
5	140045	26	WASHER, SPRING, Belleville, M10,
6	89706690	5	NUT, M8, Cl 8,
7	322358	6	WASHER, SPRING, Belleville, M8,
8	120093	4	BOLT, Hex, M16 x 80, 8.8,
9	43128	1	BOLT, Hex, M8 x 30, 8.8,
10	84075226	1	SUPPORT, , BSN C435
10	87392037	1	SUPPORT, , ASN D496
10	84461293	1	SUPPORT, , BSN F436495
11	100016	13	NUT, M10, Cl 8,
12	100020	4	NUT, M16, Cl 8,
13	84071418	1	SUPPORT,
14	84437758	1	SUPPORT,
15	43127	4	BOLT, Hex, M8 x 25, 8.8,
16	84437677	1	SUPPORT,
17	84437551	1	SUPPORT, , BSN F238347
18	412649	2	WASHER, SPRING, Belleville, M6, , BSN F238347
19	120100	2	BOLT, Hex, M6 x 20, 8.8, , BSN F238347

02.07(01) DRIVE, ROTARY SCREEN AND FAN

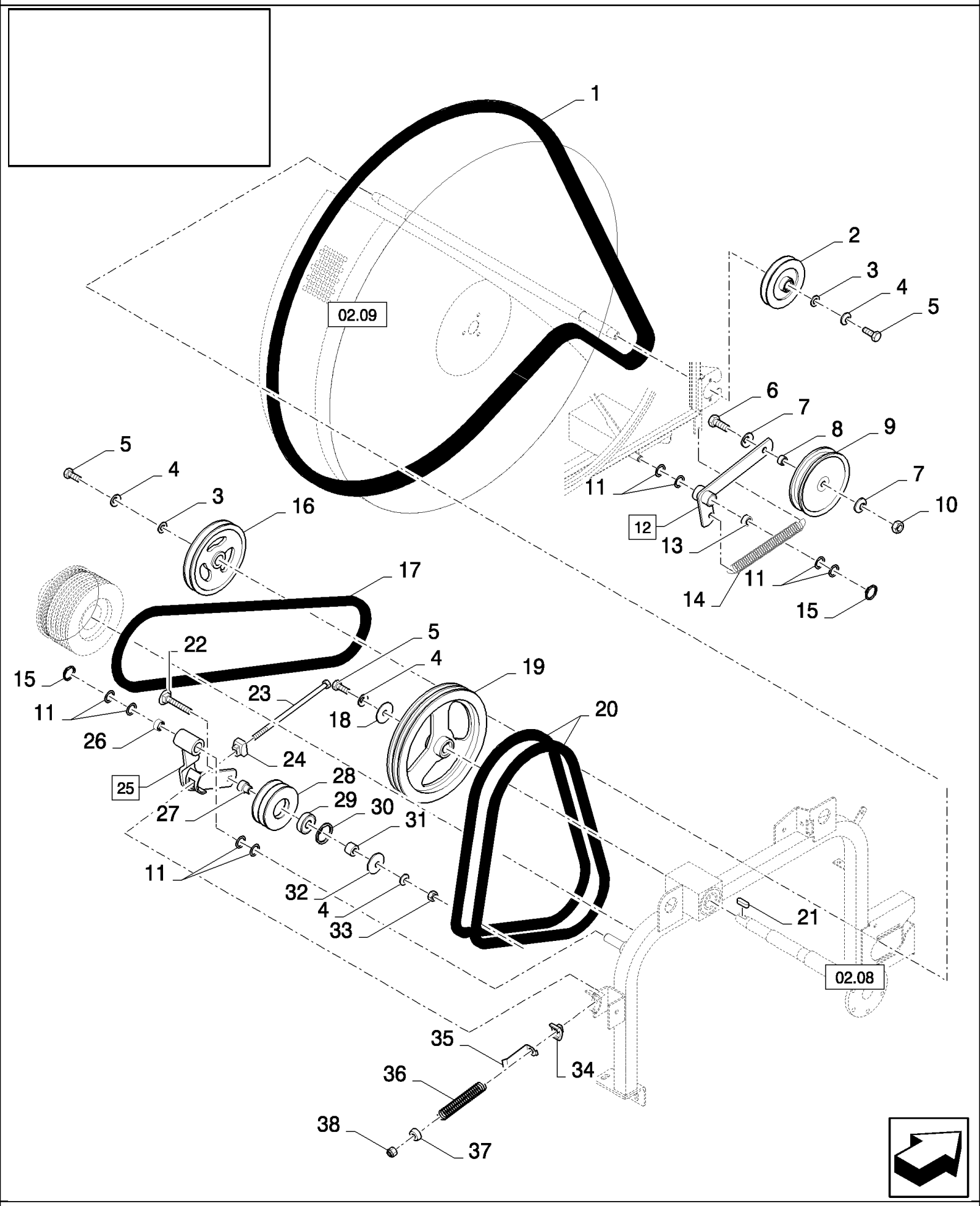

CX880 COMBINE - BASE UNIT (2/01-)

02.07(01) DRIVE, ROTARY SCREEN AND FAN

ссылка	Номер детали	Кол-во	Описание
1	84057085	1	BELT, TRANSMISSION,
2	84069923	1	PULLEY,
3	378244	2	WASHER, M10,
4	140045	4	WASHER, SPRING, Belleville, M10,
5	43139	3	SCREW, Hex, M10 x 25, 8.8, Full Thd, M10x25
6	9706702	1	SCREW, Hex, M12 x 50, 8.8,
7	140046	2	WASHER, Belleville, M12,
8	84069986	1	BUSHING,
9	84072736	1	PULLEY,
10	9706685	1	NUT, M12, Cl 8,
11	443434	8	WASHER,
12	84069802	1	LEVER, (13)
13	382974	2	BUSHING,
14	180039	1	SPRING,
15	370024	2	RING, SNAP, M20, Ext,
16	84069907	1	PULLEY,
17	84061465	1	BELTS, SET OF 2,
18	140042	1	WASHER, M10 x 34 x 3,
19	84071139	1	PULLEY,
19	84462175	1	PULLEY, , FOR HIGH FAN SPEED ONLY
20	9835816	1	BELTS, SET OF 2,
20	87337385	1	SET OF BELTS, , FOR HIGH FAN SPEED ONLY
21	360956	1	KEY, , BSN C379
21	170005	1	KEY, , ASN D380
22	374894	1	BOLT, CARRIAGE, Short NK, M10 x 70, Cl8.8, M10x70, BSN C479
22	86512447	1	BOLT, CARRIAGE, Short NK, M10 x 60, Cl8.8, , ASN D480
23	9514334	1	ROD,
24	754131	1	GUIDE,
25	84069771	1	LEVER, (26)
26	382974	2	BUSHING,
27	84071567	1	SHAFT,
28	84072747	1	PULLEY,
29	727874	1	BEARING ASSY,
30	300647	1	RING, SNAP, M47, Int,
31	449267	1	BUSHING,
32	140198	1	WASHER,
33	100016	1	NUT, M10, Cl 8,
34	442398	1	GUIDE,
35	913108	1	INDICATOR,
36	9817602	1	SPRING,
37	356728	1	PROTECTION CAP,
38	100037	1	NUT, M10 x 1.5, Cl 8,

02.08(01) ROTARY SCREEN : SHAFTS

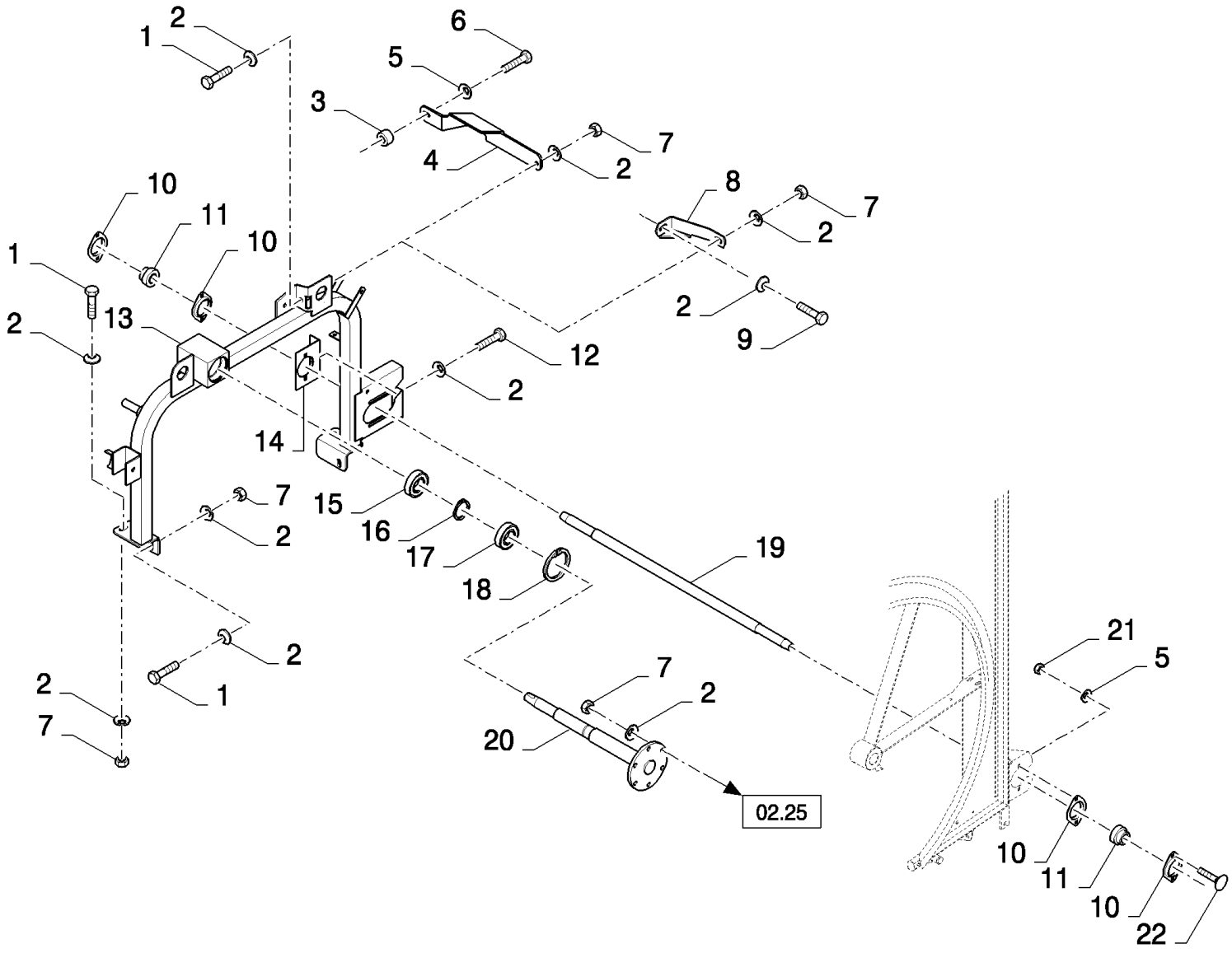

CX880 COMBINE - BASE UNIT (2/01-)

02.08(01) ROTARY SCREEN : SHAFTS

ссылка	Номер детали	Кол-во	Описание
1	43139	5	SCREW, Hex, M10 x 25, 8.8, Full Thd, M10x25
2	140045	AR	WASHER, SPRING, Belleville, M10,
3	9812123	1	RING, , FOR CX860 ONLY
4	84073603	1	SUPPORT, , FOR CX860 ONLY
4	84432302	1	SUPPORT, , FOR CX880 ONLY
5	322358	5	WASHER, SPRING, Belleville, M8,
6	120106	1	BOLT, Hex, M8 x 40, 8.8, Full Thd, , FOR CX860 ONLY
6	120104	1	SCREW, Hex, M8 x 20, 8.8, , FOR CX880 ONLY
7	100016	AR	NUT, M10, Cl 8,
8	84069928	1	SUPPORT, , FOR CX820, CX840 ONLY, FOR CX720, CX740, CX760, CX780 ONLY
9	88206	1	BOLT, Hex, 3/8"-16 x 1", G5, Full Thd,
10	86548974	4	FLANGE,
11	325103	2	BEARING, BALL,
12	120115	1	SCREW, Hex, M10 x 70, 8.8, Full Thd,
13	84069889	1	SUPPORT, , FOR CX720, CX740, CX760, CX780 ONLY, FOR CX820, CX840 ONLY, FOR CX860 ONLY
13	84432290	1	SUPPORT, , FOR CX880 ONLY
14	84069925	1	PLATE,
15	210043	1	BEARING, BALL,
16	11068376	1	RING, SNAP, M35, Ext x 1.5 Thk,
17	84438926	1	BEARING ASSY,
18	370018	1	RING, SNAP,
19	84071334	1	SHAFT, , FOR CX860 ONLY
19	84072495	1	SHAFT, , FOR CX880 ONLY
19	84071010	1	SHAFT, , FOR CX820, CX840 ONLY
19	84071011	1	SHAFT, , FOR CX720, CX740, CX760, CX780 ONLY
20	84071833	1	SHAFT, , FOR CX860 ONLY
20	84072415	1	SHAFT, , FOR CX880 ONLY
20	84069769	1	SHAFT, , FOR CX820, CX840 ONLY
20	84069779	1	SHAFT, , FOR CX720, CX740, CX760, CX780 ONLY
21	89706690	4	NUT, M8, Cl 8,
22	86507486	4	BOLT, CARRIAGE, Short NK, M8 x 20, Cl8.8, Full Thd,

02.09(01) REVOLVING DUST SCREEN 38"

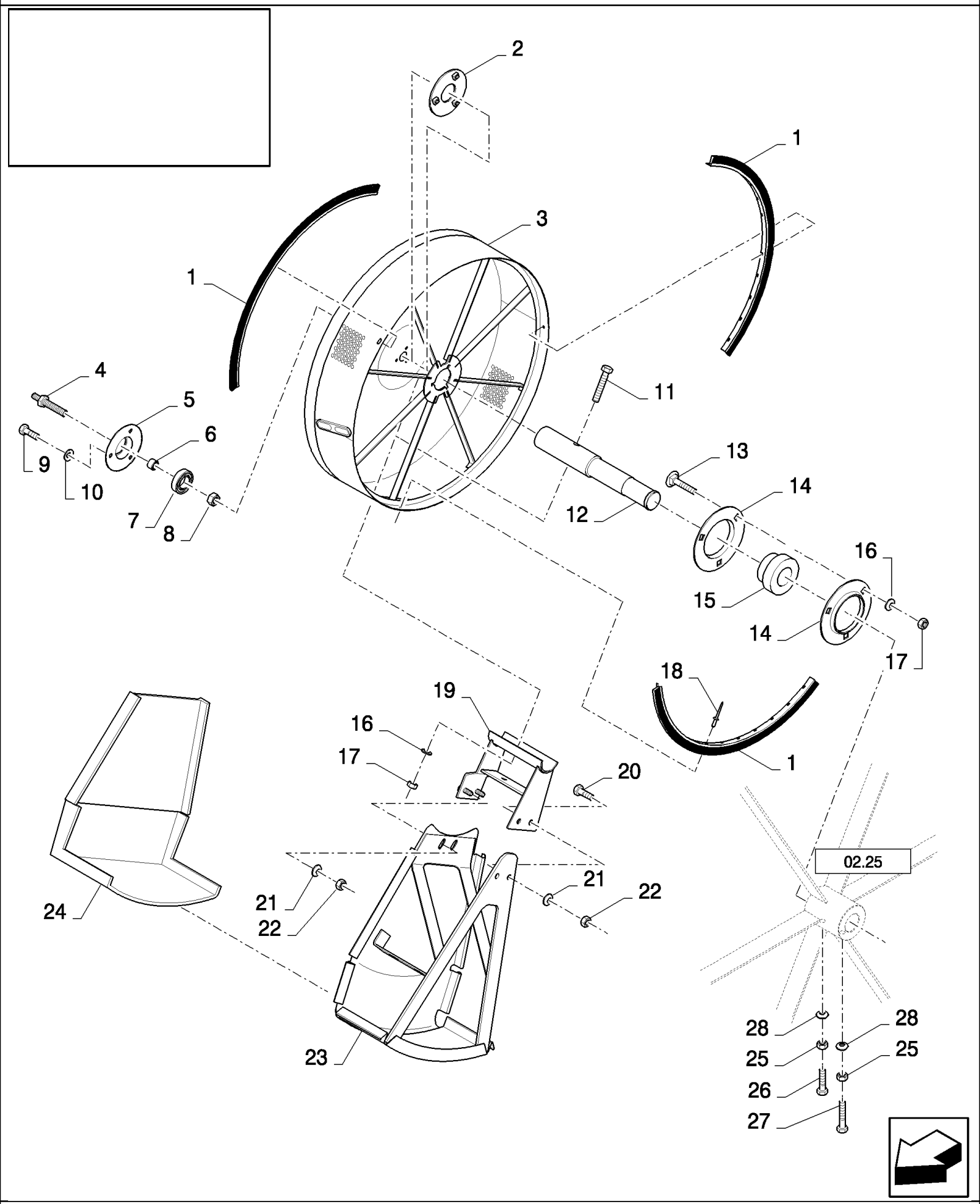

CX880 COMBINE - BASE UNIT (2/01-)

02.09(01) REVOLVING DUST SCREEN 38"

ссылка	Номер детали	Кол-во	Описание
1	84057430	3	BRUSH,
2	84071581	1	SUPPORT,
3	84069849	1	SCREEN, , BSN C407
3	84458357	1	SCREEN, , ASN D408
4	84032079	1	SCREW,
5	365018	1	FLANGE,
6	434182	1	BUSHING,
7	362804	1	BEARING ASSY,
8	9706685	1	NUT, M12, Cl 8,
9	86508568	3	SCREW, Hex, M6 x 16, 8.8,
10	322357	3	WASHER, SPRING, Belleville, M6,
11	120070	1	BOLT, Hex, M10 x 60, 8.8, , BSN C347
11	120070	2	BOLT, Hex, M10 x 60, 8.8, , ASN D348
12	84071876	1	SHAFT, , BSN C347
12	84448897	1	SHAFT, , ASN D348
13	V43471	3	BOLT, M10x20
14	36403	2	FLANGE,
15	322360	1	BEARING, BALL,
16	140045	4	WASHER, SPRING, Belleville, M10,
17	100016	4	NUT, M10, Cl 8,
17	100037	2	NUT, M10 x 1.5, Cl 8,
18	NS	AR	NOT SERVICED, Rivet
19	84069817	1	SUPPORT, , BSN C347
19	84448887	1	SUPPORT, , ASN D348
20	16043224	2	BOLT, Hex, M8 x 16, 8.8, Full Thd,
21	322358	4	WASHER, SPRING, Belleville, M8,
22	89706690	4	NUT, M8, Cl 8,
23	84069815	1	SCREEN,
24	84061170	1	INSULATOR,
25	320648	2	NUT, M10, Cl 8,
26	120112	1	BOLT, Hex, M10 x 40, 8.8, Full Thd,
27	84062222	1	BOLT, Hex, M10 x 45, 8.8, Full Thd, M10x45
28	86511323	2	WASHER, M10 x 20 x 2,

02.10(01) BRUSH IN DUST SCREEN

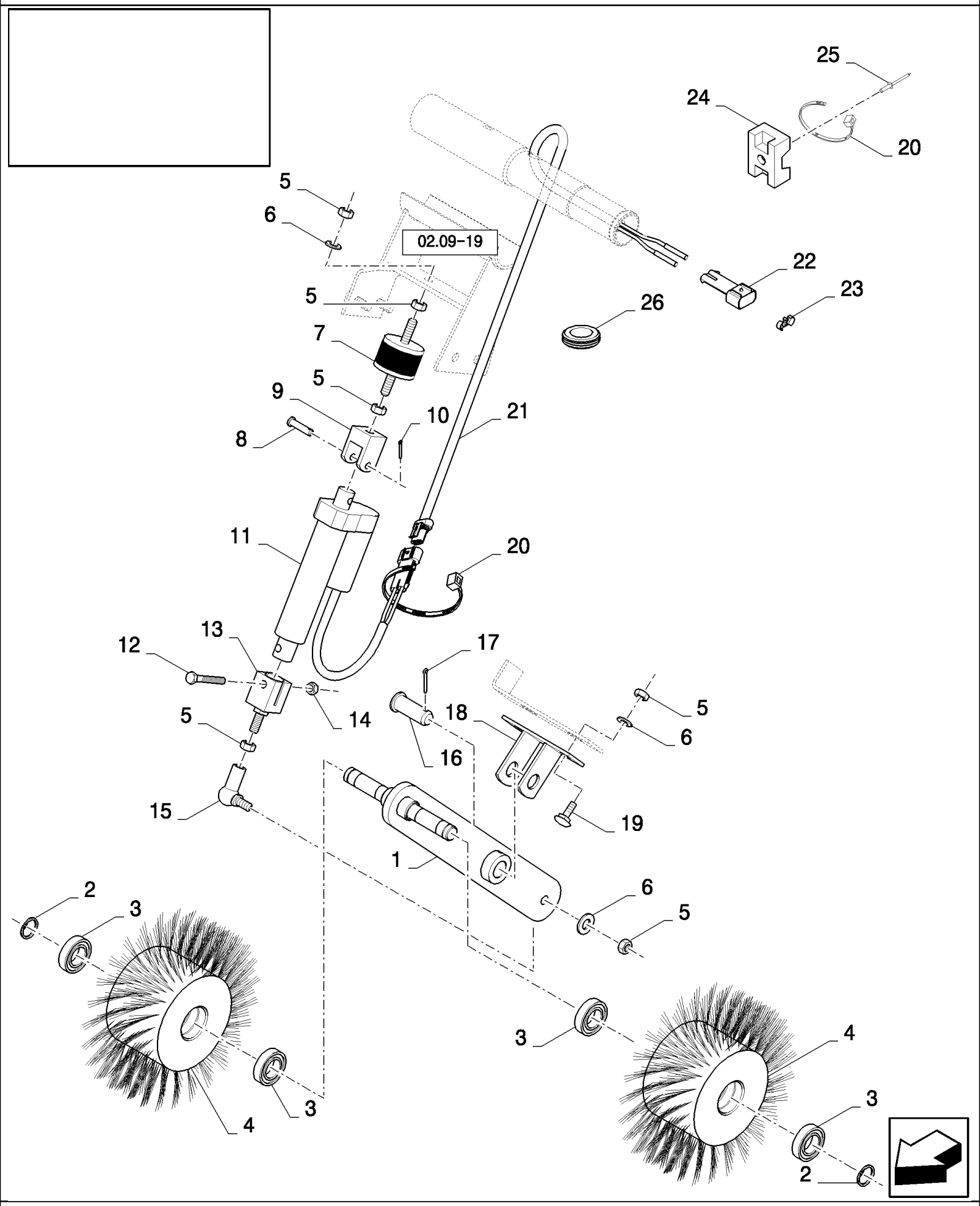

CX880 COMBINE - BASE UNIT (2/01-)

02.10(01) BRUSH IN DUST SCREEN

ссылка	Номер детали	Кол-во	Описание
1	84071704	1	LEVER, , BSN C347
1	84448930	1	LEVER, , ASN D348
2	301615	2	RING, SNAP,
3	9815813	4	BEARING ASSY,
4	84061045	2	BRUSH, , BSN C347
4	84448924	2	BRUSH, , ASN D348
5	89706690	7	NUT, M8, Cl 8,
6	322358	4	WASHER, SPRING, Belleville, M8,
7	393802	1	SHOCK ABSORBER,
8	376876	1	PIN, CLEVIS, M6 x 30,
9	84026054	1	SUPPORT,
10	300399	1	PIN, SPLIT (COTTER), , BSN C273
10	86977785	1	PIN, SPLIT (COTTER), M1.6 x 20, , ASN D274
11	84440048	1	ACTUATOR,
12	86977789	1	SCREW, Hex, M6 x 35, 8.8, , BSN C273
12	86977789	1	SCREW, Hex, M6 x 35, 8.8, , ASN D274
13	84071712	1	CLEVIS,
14	353308	1	NUT, M6 x 1, Cl 8,
15	412439	1	BALL JOINT,
16	84072127	1	PIN,
17	130007	1	PIN, SPLIT (COTTER), M4 x 25,
18	84071754	1	SUPPORT,
19	86507486	2	BOLT, CARRIAGE, Short NK, M8 x 20, Cl8.8, Full Thd,
20	323597	1	STRAP, CABLE, M9 x 165 or M5 x 197, , BSN C273
20	86566989	7	STRAP, CABLE, , ASN D274
21	86608490	1	HARNESS, WIRE,
22	86604176	1	CONNECTOR, WIRE,
23	86604177	1	PLUG,
24	86590413	2	CLAMP,
25	80445395	2	RIVET,
26	411809	1	GROMMET,

02.11(01) ENGINE, GEARBOX AND CLUTCH

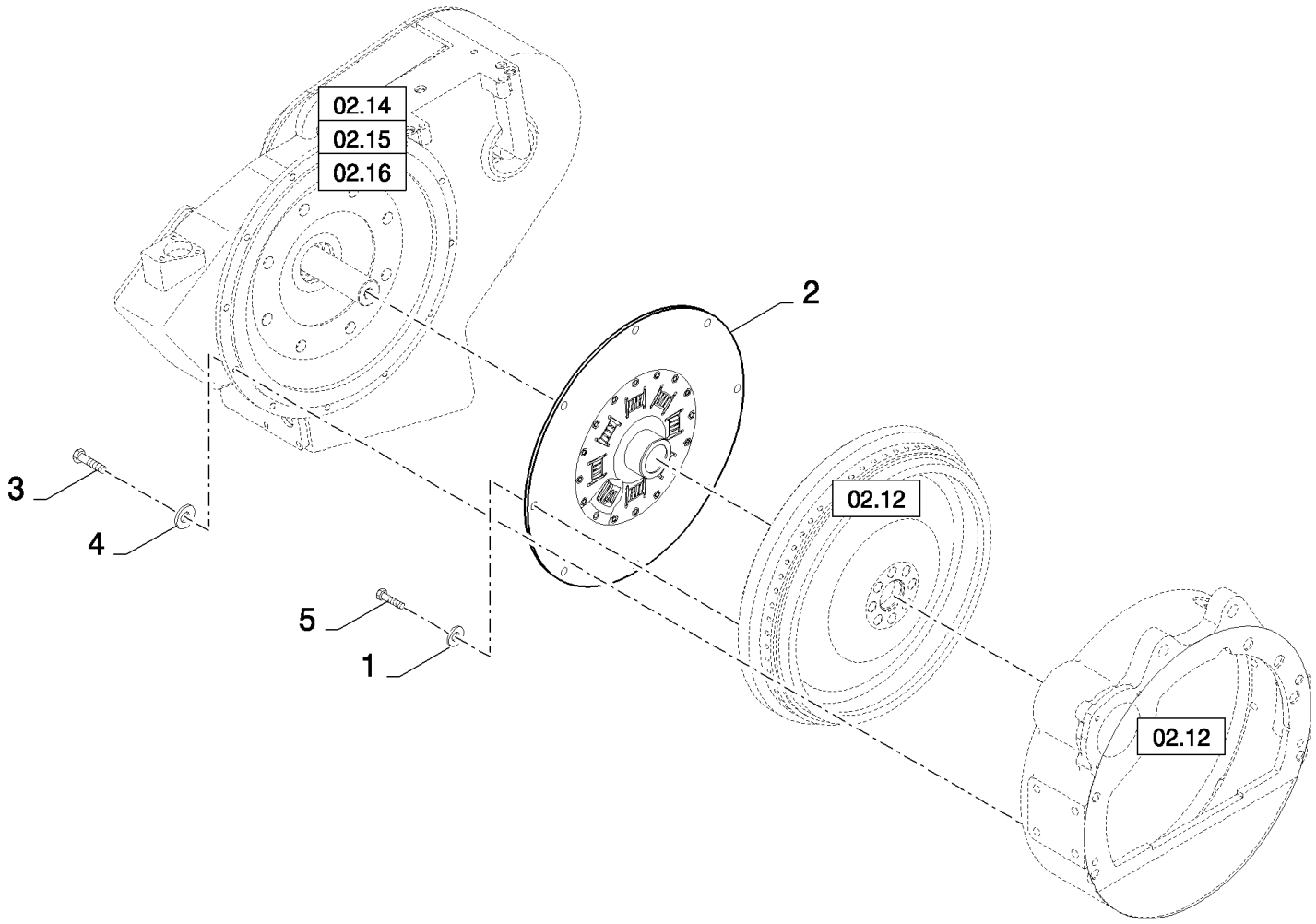

02.11(01) ENGINE, GEARBOX AND CLUTCH

ссылка	Номер детали	Кол-во	Описание
1	140045	AR	WASHER, SPRING, Belleville, M10, , FOR CX780, CX820, CX840 ONLY, FOR CX720, CX740, CX760 ONLY
1	140046	AR	WASHER, Belleville, M12, , FOR CX860, CX880 ONLY
2	86586980	1	CLUTCH, , FOR CX720, CX740, CX760 ONLY, FOR CX780, CX820, CX840 ONLY
2	86592448	1	CLUTCH, , FOR CX860, CX880 ONLY, BSN C371
2	87282102	1	CLUTCH, , FOR CX860, CX880 ONLY, ASN D372
3	43140	AR	BOLT, Hex, M10 x 30, 8.8, Full Thd,
4	140045	AR	WASHER, SPRING, Belleville, M10,
5	43138	8	SCREW, Hex, M10 x 20, 8.8, Full Thd, , FOR CX780, CX820, CX840 ONLY, FOR CX720, CX740, CX760 ONLY
5	300388	8	SCREW, Hex, M12 x 25, 8.8, , FOR CX860, CX880 ONLY

02.13(01) MAIN DRIVE

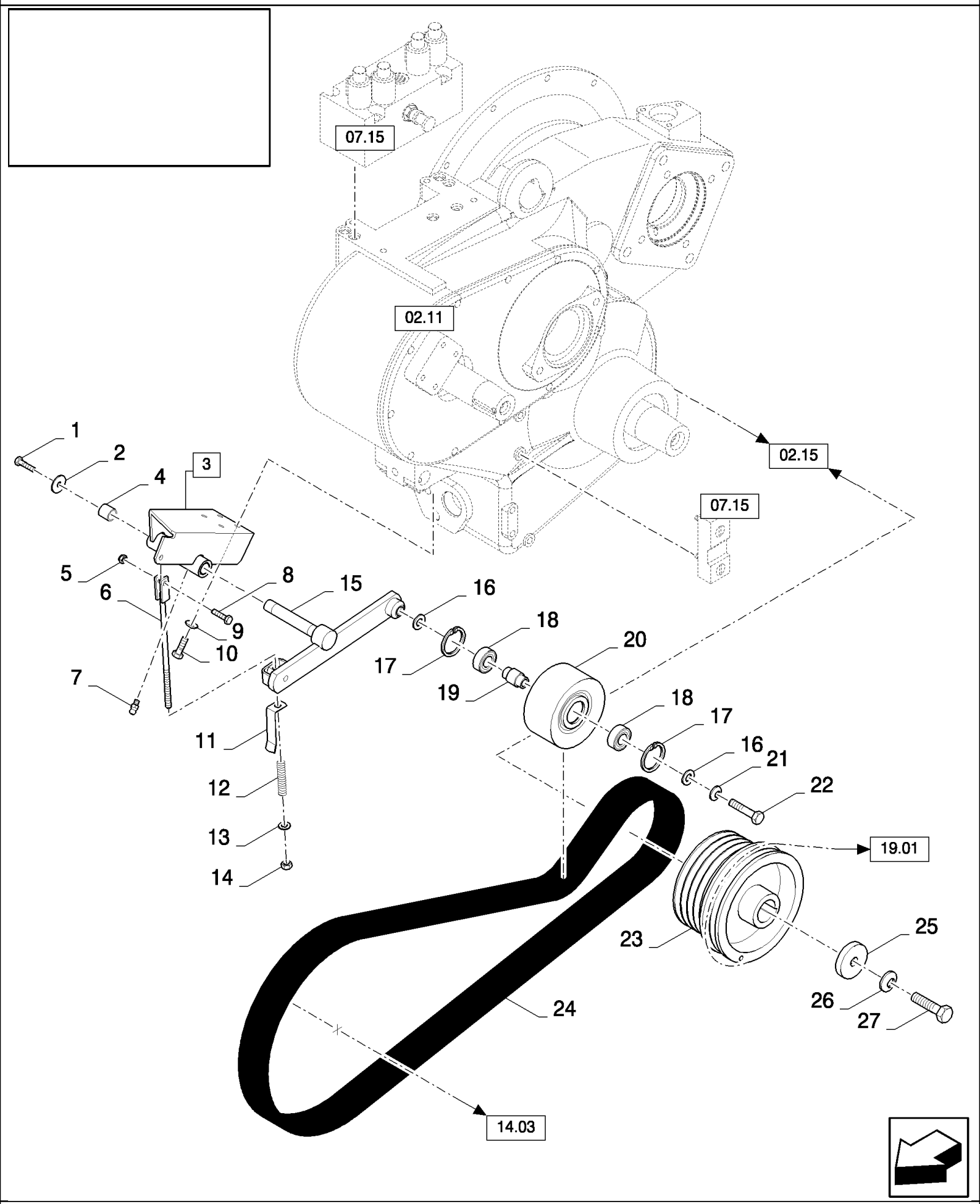

CX880 COMBINE - BASE UNIT (2/01-)

02.13(01) MAIN DRIVE

ссылка	Номер детали	Кол-во	Описание
1	43138	1	SCREW, Hex, M10 x 20, 8.8, Full Thd,
2	140082	1	WASHER,
3	84073177	1	SUPPORT, (4)
4	84057311	2	SLEEVE,
5	100037	1	NUT, M10 x 1.5, Cl 8,
6	84438843	1	TIE-ROD,
7	323713	1	NIPPLE, LUBE,
8	9706704	1	BOLT, Hex, M10 x 35, 8.8, Full Thd, , BSN C367
8	120112	1	BOLT, Hex, M10 x 40, 8.8, Full Thd, , ASN D368
9	140046	4	WASHER, Belleville, M12,
10	300388	4	SCREW, Hex, M12 x 25, 8.8,
11	84072876	1	INDICATOR,
12	84814905	1	SPRING,
13	378245	1	WASHER, M12,
14	412126	1	NUT, LOCK, M12 x 1.75, Cl 8,
15	84438854	1	LEVER,
16	378246	2	WASHER,
17	370011	2	RING, SNAP, M52, Int,
18	84057966	2	BEARING, BALL,
19	84057817	1	BUSHING,
20	84072825	1	WHEEL, IDLER,
21	140048	1	WASHER, SPRING, Belleville, M16,
22	350616	1	SCREW, Hex, M16 x 90, 8.8,
23	84069830	1	PULLEY,
24	84057914	1	BELT, TRANSMISSION,
25	84073278	1	WASHER,
26	322359	1	WASHER, SPRING, Belleville, M20,
27	394877	1	BOLT, Hex, M20 x 70, 8.8, M20x70

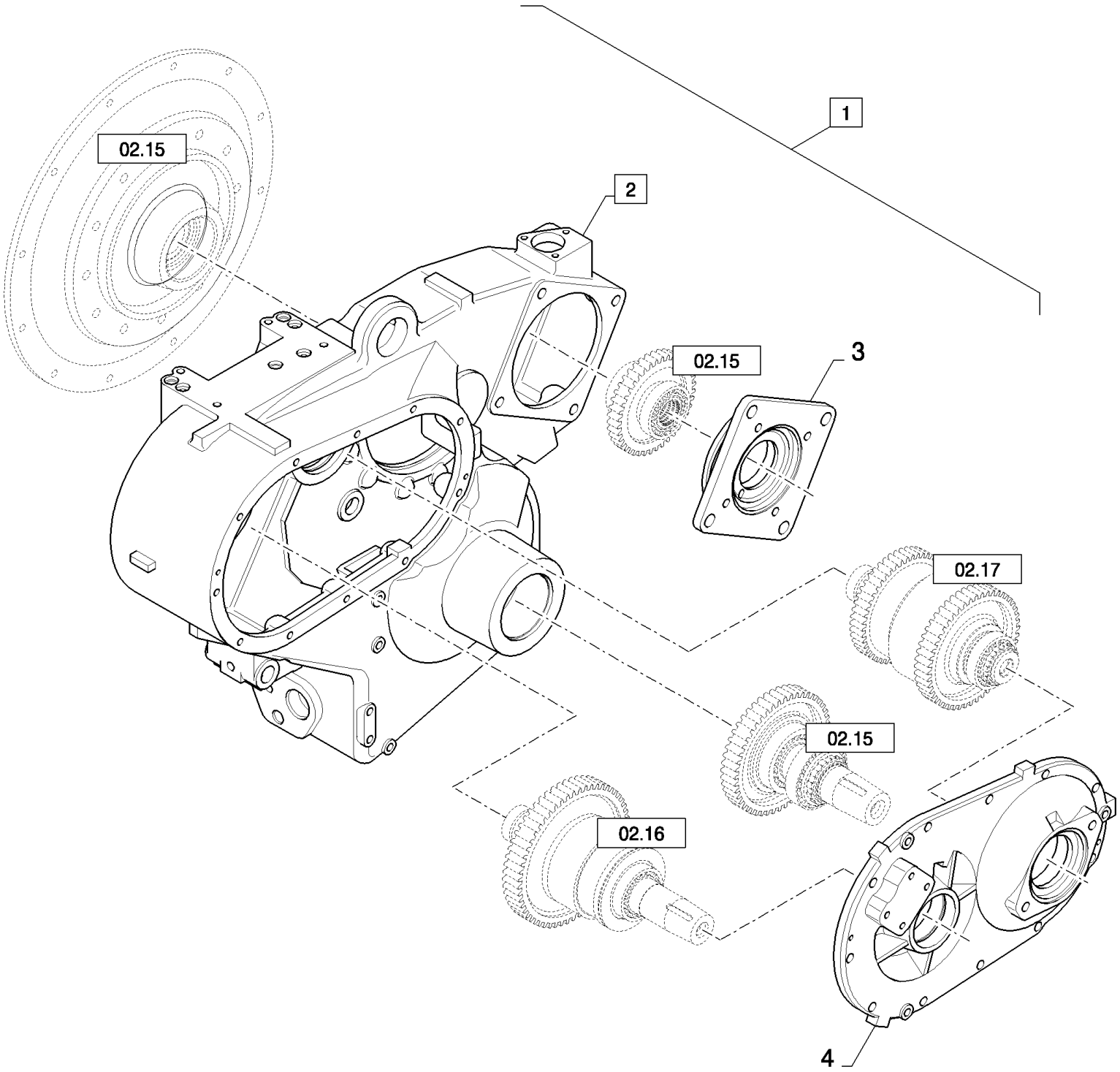
1
02.15
2
02.15
3
02.17
02.15
02.16
4

CX880 COMBINE - BASE UNIT (2/01-)

02.14(01) ENGINE, GEARBOX

ссылка	Номер детали	Кол-во	Описание
1	84320047	1	GEARBOX, (2 to 4), FOR CX720, CX740, CX760 ONLY, BSN C415
1	87283930	1	GEARBOX ASSY, (2 to 4), FOR CX720, CX740, CX760 ONLY, BSN F416479
1	87328023	1	GEARBOX ASSY, , FOR CX720, CX740, CX760 ONLY, ASN D480
1	84320048	1	GEARBOX, , FOR CX780, CX820, CX840 ONLY, Heavy duty version available - call Avatar Components, 1-800-453-3544, ext. 122., BSN C415
1	87283932	1	GEARBOX ASSY, , FOR CX780, CX820, CX840 ONLY, BSN F416479
1	87328025	1	GEARBOX ASSY, , FOR CX780, CX820, CX840 ONLY, ASN D480
1	84320049	1	GEARBOX, , FOR CX860, CX880 ONLY, BSN C415
1	87283934	1	GEARBOX ASSY, , FOR CX860, CX880 ONLY, BSN F416479
1	87328027	1	GEARBOX ASSY, , FOR CX860, CX880 ONLY, ASN D480
2	86623549	1	HOUSING, (4), BSN C415
2	87284718		HOUSING, (4), ASN D416
3	86623571	1	FLANGE, , FOR CX720, CX740, CX760 ONLY
3	86623551	1	FLANGE, , FOR CX780, CX820, CX840 ONLY, FOR CX860, CX880 ONLY
4	86623575	1	HOUSING, , BSN C415
4	NSS	1	NOT SERVICED SEPARATELY, , ASN D416

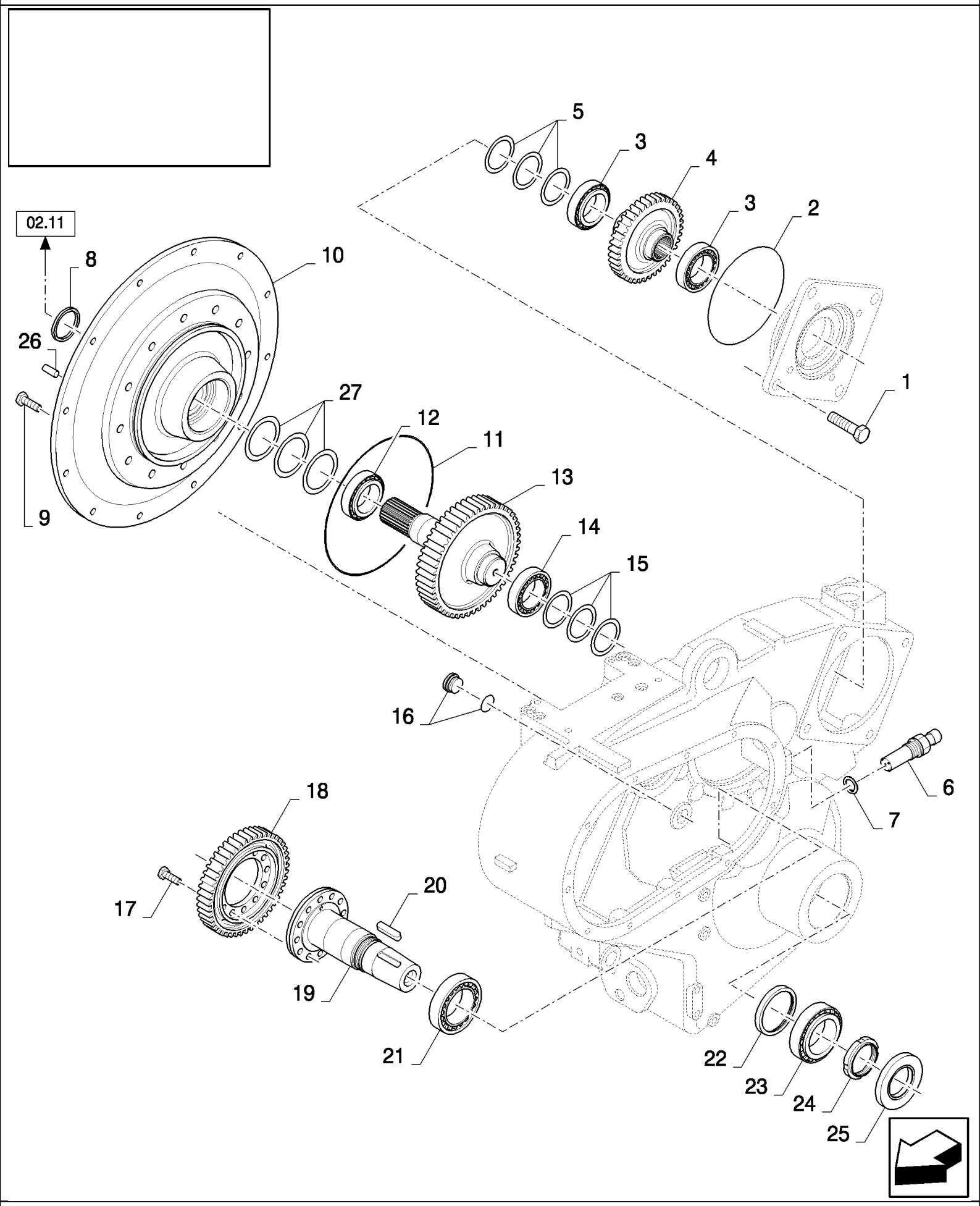
02.11
1
2
3
3
4
5
6
7
8
9
10
11
12
13
14
15
16
17
18
19
20
21
22
23
24
25
26
27

CX880 COMBINE - BASE UNIT (2/01-)

02.15(01) ENGINE, GEARBOX

ссылка	Номер детали	Кол-во	Описание
1	385922	4	SCREW, Hex, M16 x 45, 8.8,
2	86623597	1	O-RING,
3	86018151	2	BEARING, ROLLER, TAPERED,
4	86623555	1	GEAR,
5	86623723	1	KIT, SHIM,
6	86623600	1	SENDER, TEMPERATURE,
7	9511034	1	GASKET,
8	86623595	1	SEAL, RUBBER,
9	9706702	12	SCREW, Hex, M12 x 50, 8.8,
10	86623550	1	MOUNT, ENGINE, , FOR CX720, CX740, CX760, CX780, CX820, CX840 ONLY
10	86623581	1	MOUNT, ENGINE, , FOR CX860, CX880 ONLY
11	86623598	1	O-RING,
12	86623592	1	BEARING ASSY,
13	86623554	1	SHAFT,
14	561201	1	BEARING ASSY,
15	86623722	1	KIT, SHIM, , BSN C415
16	86623725	1	PLUG,
17	43260	6	BOLT, Hex, M12 x 30, 10.9,
18	86623558	1	GEAR,
19	86623562	1	SHAFT,
20	84061121	1	KEY,
21	86509786	1	BEARING, ROLLER,
22	86623560	1	SEAL, , FROM D416 PART OF GEARBOX HOUSING
23	86623593	1	BEARING ASSY,
24	86623588	1	NUT, LOCK,
25	86623596	1	SEAL, RUBBER,
26	378399	2	DOWEL,
27	87284727	1	SHIM, , ASN D416

02.16(01) ENGINE, GEARBOX - C415

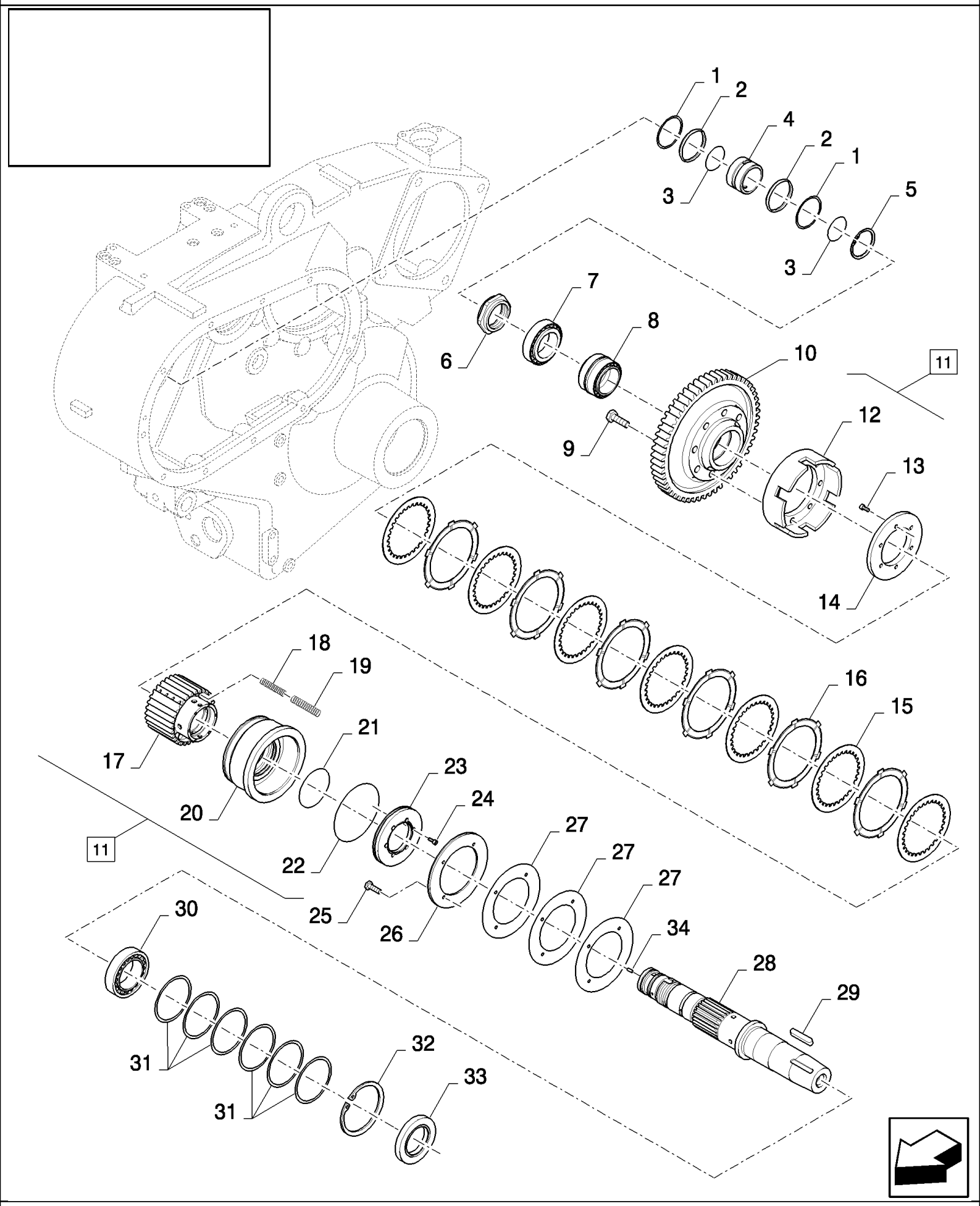

CX880 COMBINE - BASE UNIT (2/01-)

02.16(01) ENGINE, GEARBOX - C415

ссылка	Номер детали	Кол-во	Описание
1	86502705	2	WASHER,
2	217408	2	O-RING, -226, 70 Duro, 1.984" ID x .139" Thk,
3	86623599	2	SEAL,
4	86623553	1	BUSHING,
5	370011	1	RING, SNAP, M52, Int,
6	86623589	1	NUT, LOCK,
7	86018152	1	BEARING, ROLLER, TAPERED,
8	86623590	1	BEARING, ROLLER, TAPERED,
9	43140	8	BOLT, Hex, M10 x 30, 8.8, Full Thd,
10	86623559	1	GEAR,
11	86623602	1	CLUTCH, (12 to 24)
12	86623624	1	HOUSING,
13	86512134	6	SCREW, Hex Soc Hd, M6 x 16, 12.9,
14	86623629	1	PLATE, END,
15	86623630	7	CLUTCH, PLATE,
16	86623631	6	CLUTCH, PLATE,
17	86623623	1	HUB,
18	86623824	18	SPRING,
19	86623825	18	SPRING,
20	86623625	1	PISTON,
21	86623822	1	SEAL,
22	86623823	1	SEAL,
23	86623628	1	COVER,
24	86635439	6	SCREW, Hex Soc Hd, M6 x 10, 12.9,
25	86508568	4	SCREW, Hex, M6 x 16, 8.8,
26	86623603	1	BRAKE DISC,
27	86623724	1	KIT, SHIM,
28	86623561	1	SHAFT,
29	170066	1	KEY,
30	86570632	1	BEARING ASSY,
31	86623722	1	KIT, SHIM,
32	86623594	1	CIRCLIP,
33	84022860	1	SEAL, SHAFT,
34	88868	1	PIN, LOCK, 1/8" x 5/16", Slotted,

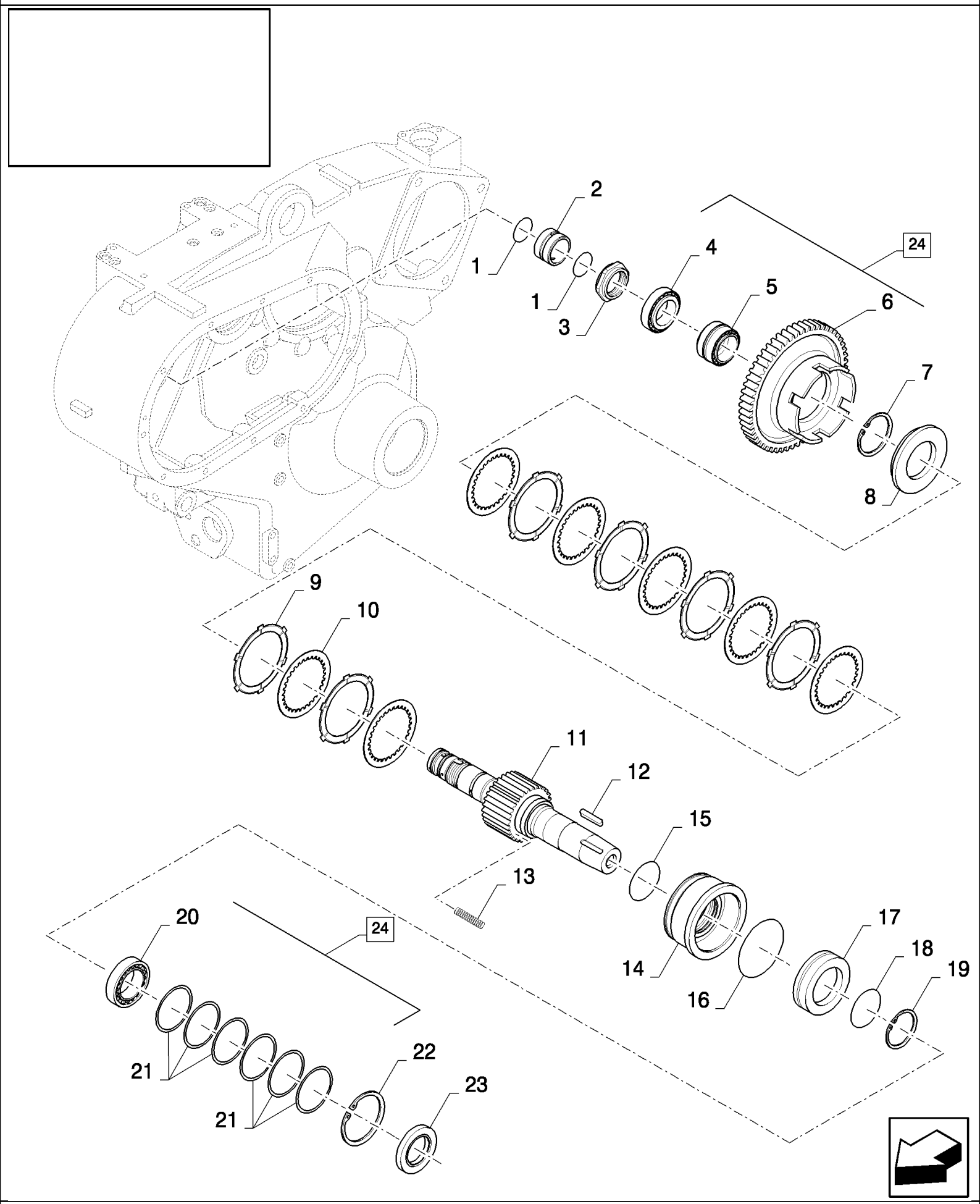
1
2
1
3
4
5
6
24
7
8
9
10
11
12
13
15
14
16
17
18
19
20
24
21
21
22
23

CX880 COMBINE - BASE UNIT (2/01-)

02.16(02) ENGINE, GEARBOX - D416

ссылка	Номер детали	Кол-во	Описание
1	87284622	2	SEALRING,
2	NSS	1	NOT SERVICED SEPARATELY, , FROM D416 PART OF GEARBOX HOUSING
3	86623589	1	NUT, LOCK,
4	86018152	1	BEARING, ROLLER, TAPERED,
5	86623590		BEARING, ROLLER, TAPERED,
6	87284725	1	GEAR,
7	300637	1	RING, SNAP, M75, Ext,
8	87284724	1	PLATE, BACK,
9	86623631	6	CLUTCH, PLATE,
10	86623630	7	CLUTCH, PLATE,
11	87284721	1	SHAFT,
12	170066	1	KEY,
13	87284726	18	SPRING, COMPRESSION,
14	87284722	1	PISTON,
15	86623822	1	SEAL,
16	86623823	1	SEAL,
17	87284723	1	CYLINDER,
18	241104	1	O-RING, -037, 70 Duro, 2.489" ID x .070" Thk,
19	300636	1	CIRCLIP, M70, Ext,
20	86570632	1	BEARING ASSY,
21	86623722	1	KIT, SHIM,
22	86623594	1	CIRCLIP,
23	84022860	1	SEAL, SHAFT,
24	87510594	1	SHAFT, KIT (3, 7 to 11, 13 to 19, 23)

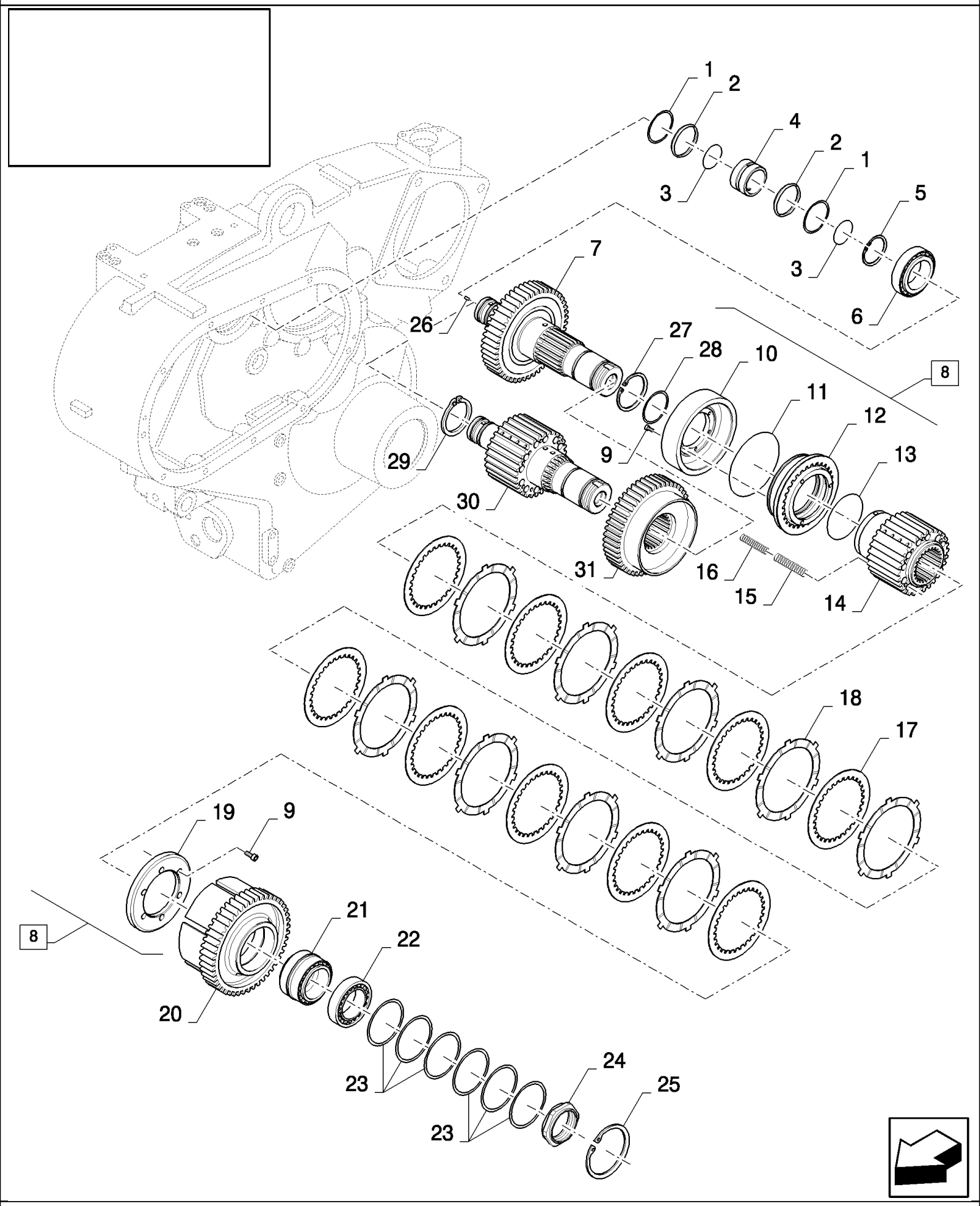
1
2
4
2
1
3
5
3
6
7
26
27
28
10
8
11
12
9
13
29
30
31
16
15
14
18
17
19
9
8
21
22
20
23
24
25
23

CX880 COMBINE - BASE UNIT (2/01-)

02.17(01) ENGINE, GEARBOX

ссылка	Номер детали	Кол-во	Описание
1	86502705	2	WASHER, , BSN C415
2	217408	2	O-RING, -226, 70 Duro, 1.984" ID x .139" Thk, , BSN C415
3	86623599	2	SEAL, , BSN C415
3	87284622	2	SEALRING, , ASN D416
4	86623553	1	BUSHING, , BSN C415
4	87284732	1	SLEEVE, , FROM D416 PART OF GEARBOX HOUSING, ASN D416
5	370011	1	RING, SNAP, M52, Int, , BSN C415
6	561201	1	BEARING ASSY,
7	86623556	1	GEAR, , BSN C415
7	87284719	1	DUCT, , BSN F416479
8	86623601	1	CLUTCH, (9 to 19), BSN C415
8	87284720	1	CLUTCH, (9 to 19, 27, 28), BSN F416479
8	87328039	1	CLUTCH, (9,11,12,13,15,17,18,19,23,24,29,30,31), ASN D480
9	86566099	12	SCREW, Hex Soc Hd, M8 x 16, 12.9, , BSN C415
9	86566099	6	SCREW, Hex Soc Hd, M8 x 16, 12.9, , BSN F416479
9	89706749	6	SCREW, M8x25, ASN D480
10	86623619	1	COVER, , BSN C415
10	87284731	1	CYLINDER, , BSN F416479
11	86623819	1	SEAL,
12	86623617	1	PISTON, , BSN C415
12	87284730	1	PISTON, , ASN D416
13	86623818	1	SEAL,
14	86623615	1	HUB, , BSN C415
14	87284729	1	HUB, , BSN F416479
15	86623820	12	SPRING, , BSN C479
15	87328036	12	SPRING, COMPRESSION, , ASN D480
16	86623821	12	SPRING, , BSN C479
17	86623621	10	CLUTCH, PLATE, , BSN C415
17	86623621	9	CLUTCH, PLATE, , BSN F416479
17	86623621	10	CLUTCH, PLATE, , ASN D480
18	86623622	9	CLUTCH, PLATE,
19	86623620	1	PLATE, END,
20	86623557	1	GEAR,
21	86623591	1	BEARING, ROLLER, TAPERED,
22	561201	1	BEARING ASSY,
23	86623722	1	KIT, SHIM,
24	86623580	1	NUT, LOCK,
25	86623594	1	CIRCLIP,
26	88868	1	PIN, LOCK, 1/8" x 5/16", Slotted, , BSN C415
27	87304174	1	RING, SNAP, , ASN D416
28	272310	1	O-RING, -042, 70 Duro, 3.239" ID x .070" Thk, , ASN D416
29	80370009	1	CIRCLIP, , ASN D480
30	87328035	1	GEAR, , ASN D480
31	87328034	1	SHAFT ASSY., , ASN D480

02.19(01) FUEL TANK, PIPE LINES

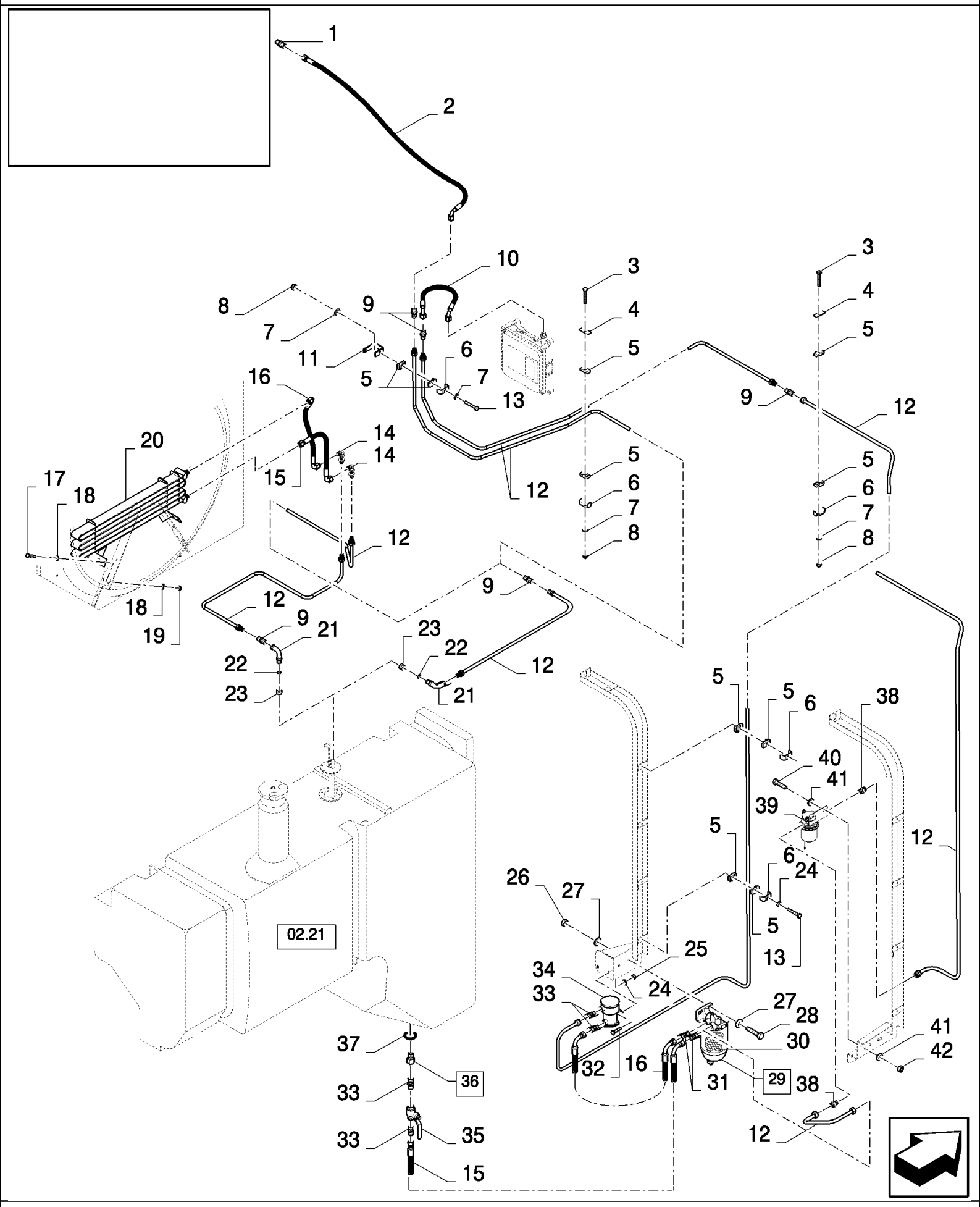

CX880 COMBINE - BASE UNIT (2/01-)

02.19(01) FUEL TANK, PIPE LINES

ссылка	Номер детали	Кол-во	Описание
1	84431916	1	FITTING,
2	84432373	1	HOSE, FLEXIBLE, , FOR CX880 ONLY, BSN C241
2	84437706	1	HOSE, FLEXIBLE, , FOR CX880 ONLY, ASN D242
2	84437706	1	HOSE, FLEXIBLE, , FOR CX860 ONLY
3	120056	3	SCREW, Hex, M6 x 50, 8.8,
4	434097	2	BRACKET,
5	430357	12	CLAMP,
6	431941	6	SUPPORT,
7	140015	5	WASHER, 6MM
8	353308	4	NUT, M6 x 1, Cl 8,
9	150018	4	CONNECTOR, HYD., , BSN C419
9	150018	5	CONNECTOR, HYD., , ASN D420
10	84432374	1	HOSE, FLEXIBLE, , FOR CX880 ONLY
10	84437705	1	HOSE, FLEXIBLE, , FOR CX860 ONLY
11	84432184	1	SUPPORT,
12	NS	AR	NOT SERVICED, DIA=12MM, SEE FIGURE 07.501
13	43118	3	BOLT, Hex, M6 x 40, 8.8,
14	84014046	2	ELBOW, , BSN C419
15	84334784	2	HOSE, FLEXIBLE, , BSN C419
15	84334784	1	HOSE, FLEXIBLE, , ASN D420
16	84069559	1	HOSE, FLEXIBLE, , BSN C387
16	84334784	1	HOSE, FLEXIBLE, , BSN F388419
17	120104	4	SCREW, Hex, M8 x 20, 8.8,
18	322358	8	WASHER, SPRING, Belleville, M8,
19	89706690	4	NUT, M8, Cl 8,
20	84064049	1	HEAT EXCHANGER, , BSN C363
20	84452415	1	COOLER, , BSN F364419
21	9508529	1	ELBOW,
22	150015	1	FERRULE,
23	86548976	1	NUT,
24	322357	4	WASHER, SPRING, Belleville, M6, , BSN C277
25	15896221	2	NUT, M6, Cl 10, , BSN C277
26	100016	2	NUT, M10, Cl 8,
27	140045	4	WASHER, SPRING, Belleville, M10,
28	43140	2	BOLT, Hex, M10 x 30, 8.8, Full Thd,
29	84989839	1	FILTER, FUEL, (30)
30	84989840	1	FILTER, ELEMENT,
31	9850317	2	CONNECTOR, HYD.,
32	120100	2	BOLT, Hex, M6 x 20, 8.8, , BSN C277
33	84069089	4	CONNECTOR, HYD., , BSN C277
33	84069089	2	CONNECTOR, HYD., , ASN D278
34	84334554	1	PUMP, FUEL, , BSN C277
35	84011517	1	DRAINCOCK/TAP, SUPPLY,
36	84989397	1	CONNECTOR, HYD., (37)

ссылка	Номер детали	Кол-во	Описание
37	86598101	1	O-RING, Cl 6, 15.3MM ID x 2.2 Thk,
38	521872	2	CONNECTOR, HYD., , ASN D278
39	84432306	1	PUMP, FUEL, , ASN D278
40	120104	2	SCREW, Hex, M8 x 20, 8.8, , ASN D278
41	322358	4	WASHER, SPRING, Belleville, M8, , ASN D278
42	89706690	2	NUT, M8, Cl 8, , ASN D278

02.21(01) FUEL TANK, SUPPORTS

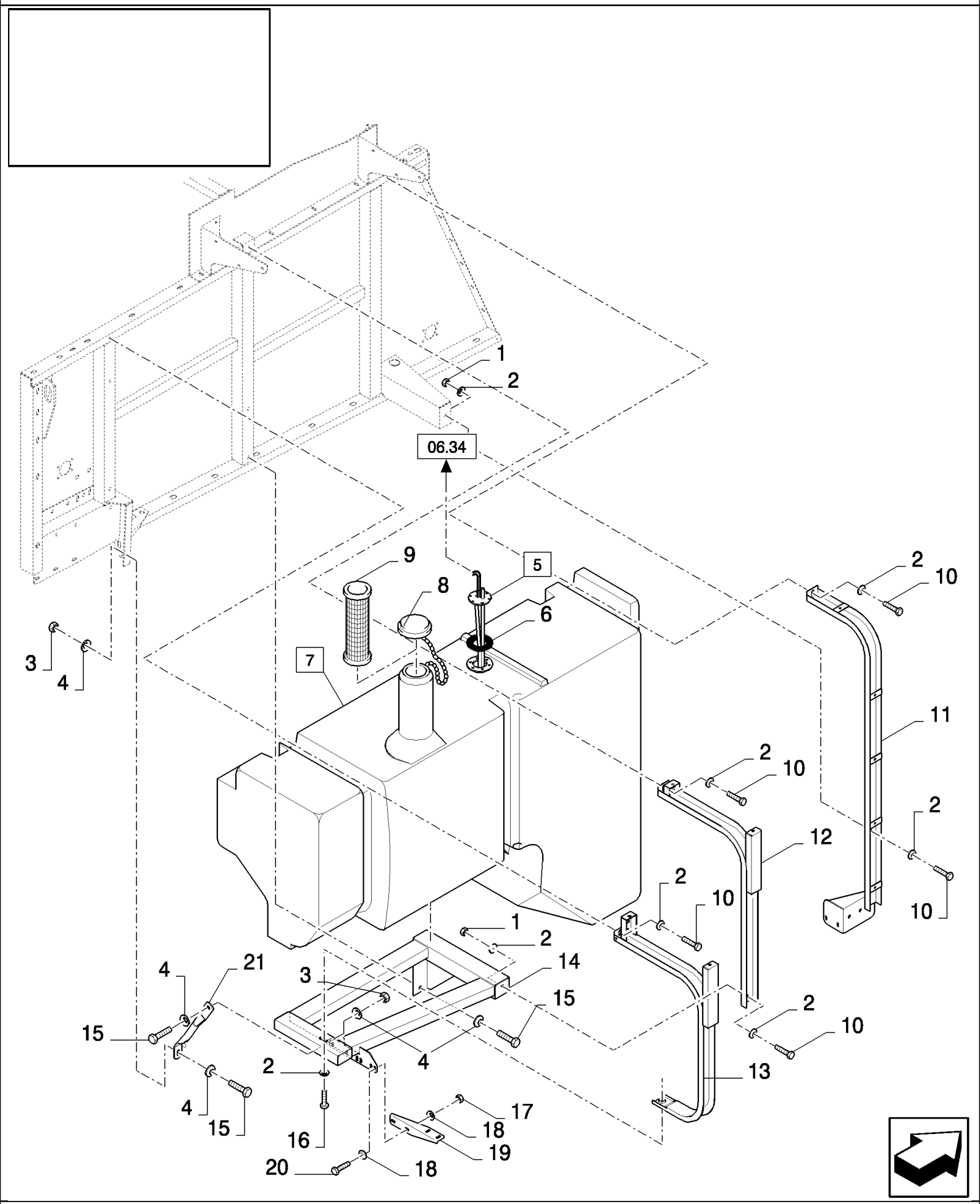

CX880 COMBINE - BASE UNIT (2/01-)

02.21(01) FUEL TANK, SUPPORTS

ссылка	Номер детали	Кол-во	Описание
1	100016	2	NUT, M10, Cl 8,
2	140045	8	WASHER, SPRING, Belleville, M10,
3	9706685	2	NUT, M12, Cl 8,
4	140046	7	WASHER, Belleville, M12,
5	84057962	1	INDICATOR, (6)
6	9832364	1	SEAL,
7	84057092	1	FUEL TANK, (8,9) 750L, FOR CX820, CX840, CX860, CX880 ONLY
7	84072259	1	FUEL TANK, (8,9) 750L, FOR CX780 ONLY
8	84041999	1	CAP,
9	9502050	1	FILTER, STRAINER, , BSN C391
9	9501200	1	FILTER, STRAINER, , ASN D392
10	43140	7	BOLT, Hex, M10 x 30, 8.8, Full Thd,
11	84071057	1	SUPPORT, , BSN C277
11	84442925	1	SUPPORT, , ASN D278
12	84434053	1	SUPPORT,
13	84071579	1	SUPPORT,
14	84069807	1	PLATE,
15	9706687	5	SCREW, Hex, M12 x 30, 8.8,
16	43138	1	SCREW, Hex, M10 x 20, 8.8, Full Thd,
17	89706690	2	NUT, M8, Cl 8,
18	322358	4	WASHER, SPRING, Belleville, M8,
19	86583281	1	SUPPORT,
20	120104	2	SCREW, Hex, M8 x 20, 8.8,
21	84071580	1	SUPPORT,

02.22(01) INTAKE, AIR FILTER - D348 FOR CX880

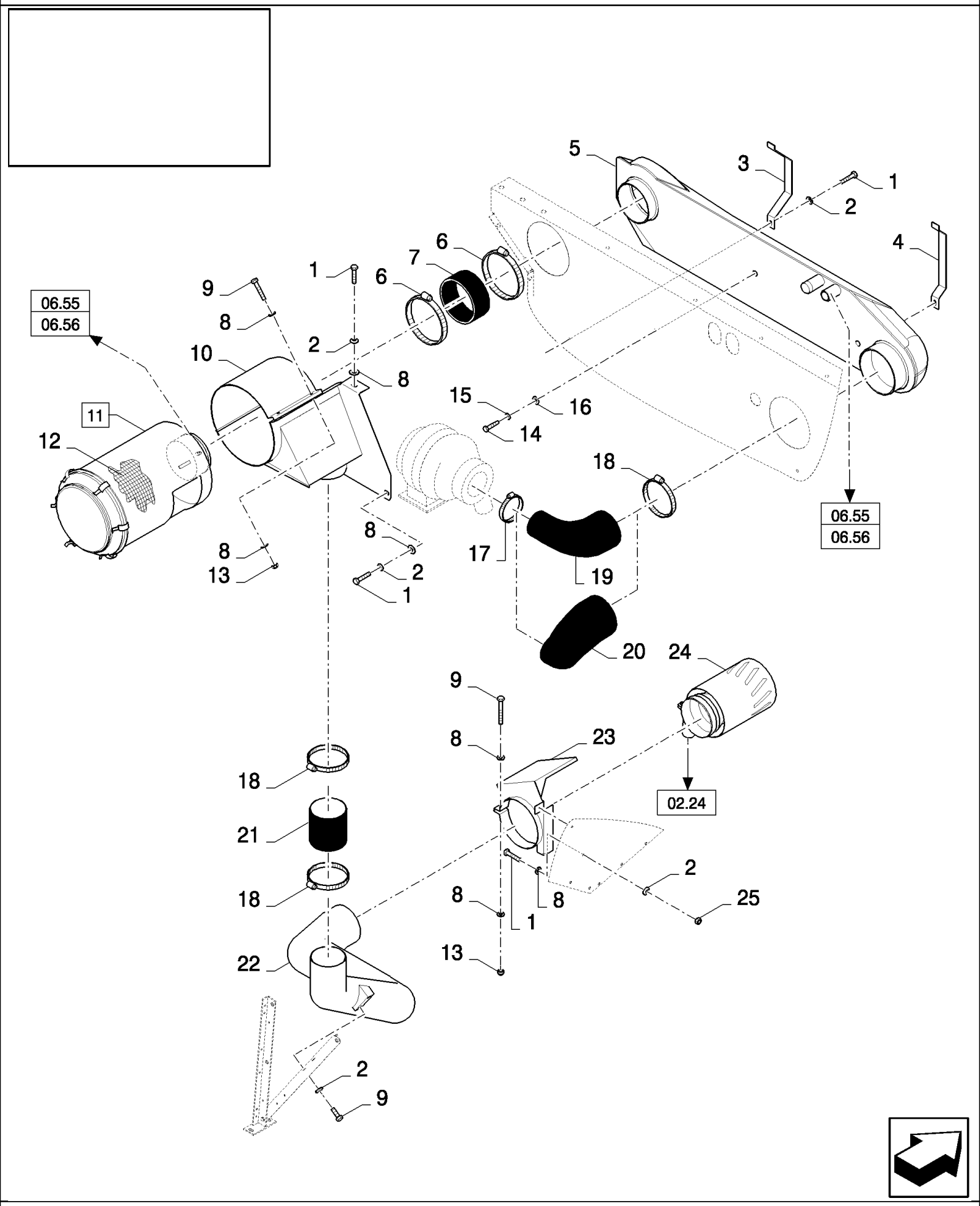

CX880 COMBINE - BASE UNIT (2/01-)

02.22(01) INTAKE, AIR FILTER - D348 FOR CX880

ссылка	Номер детали	Кол-во	Описание
1	120104	7	SCREW, Hex, M8 x 20, 8.8,
2	322358	9	WASHER, SPRING, Belleville, M8,
3	84077461	1	SUPPORT,
4	84077457	1	SUPPORT,
5	84434895	1	MANIFOLD, , FOR CX820, CX840, CX860 ONLY, BSN C277
5	84442819	1	MANIFOLD, , FOR CX820, CX840, CX860 ONLY, FOR CX880 ONLY, ASN D278
5	84434896	1	MANIFOLD, , FOR 3 M VERSION OF CX820, CX840, CX860 ONLY, FOR CX720, CX740, CX760, CX780 ONLY, BSN C277
5	84442820	1	MANIFOLD, , FOR CX720, CX740, CX760, CX780 ONLY, FOR 3 M VERSION OF CX820, CX840, CX860 ONLY, ASN D278
6	84012068	2	CLAMP, , FOR CX880 ONLY, FOR CX820, CX840, CX860 ONLY
6	337049	2	CLAMP, , FOR 3 M VERSION OF CX820, CX840, CX860 ONLY, FOR CX720, CX740, CX760, CX780 ONLY
7	84434106	1	HOSE, , FOR CX880 ONLY, FOR CX820, CX840, CX860 ONLY
7	84434161	1	HOSE, , FOR 3 M VERSION OF CX820, CX840, CX860 ONLY, FOR CX720, CX740, CX760, CX780 ONLY
8	378243	AR	WASHER, M8,
9	43129	3	BOLT, Hex, M8 x 40, 8.8,
10	84434274	1	SUPPORT, , FOR CX820, CX840, CX860 ONLY
10	84434364	1	SUPPORT, , FOR 3 M VERSION OF CX820, CX840, CX860 ONLY, FOR CX720, CX740, CX760, CX780 ONLY
10	84434274	1	SUPPORT, , FOR CX880 ONLY
11	84057280	1	AIR CLEANER, (12), FOR CX820, CX840, CX860 ONLY
11	84061430	1	AIR CLEANER, (12), FOR 3 M VERSION OF CX820, CX840, CX860 ONLY, FOR CX720, CX740, CX760, CX780 ONLY
11	84443946	1	FILTER, AIR, (12), FOR CX880 ONLY
12	84069018	1	FILTER, ELEMENT, inner, FOR CX820, CX840, CX860 ONLY
12	84069017	1	FILTER, ELEMENT, outer, FOR CX820, CX840, CX860 ONLY
12	84072430	1	FILTER, ELEMENT, inner, FOR 3 M VERSION OF CX820, CX840, CX860 ONLY, FOR CX720, CX740, CX760, CX780 ONLY
12	84443965	1	FILTER, ELEMENT, inner, FOR CX880 ONLY
12	84072431	1	FILTER, ELEMENT, outer, FOR 3 M VERSION OF CX820, CX840, CX860 ONLY, FOR CX720, CX740, CX760, CX780 ONLY
12	84443964	1	FILTER, ELEMENT, outer, FOR CX880 ONLY
13	86629542	3	NUT, LOCK, M8 x 1.25, Cl 8,
14	86977786	1	BOLT, Hex, M6 x 25, 8.8,
15	322357	1	WASHER, SPRING, Belleville, M6,
16	140040	1	WASHER, M6 x 22 x 2,
17	89706924	1	CLAMP,
18	84012068	3	CLAMP,
19	84064502	1	HOSE, , FOR CX720, CX740, CX760, CX780 ONLY, FOR CX820, CX840 ONLY
20	84061661	1	HOSE, , FOR CX880 ONLY, FOR CX860 ONLY
21	84072476	1	HOSE,
22	84072018	1	TUBE, , FOR CX880 ONLY, FOR CX820, CX840, CX860 ONLY

CX880 COMBINE - BASE UNIT (2/01-)

02.22(01) INTAKE, AIR FILTER - D348 FOR CX880

ссылка	Номер детали	Кол-во	Описание
22	84072125	1	TUBE, , FOR 3 M VERSION OF CX820, CX840, CX860 ONLY
22	84072166	1	TUBE, , FOR CX720, CX740, CX760, CX780 ONLY
23	84073051	1	SUPPORT, , BSN C277
23	84441498	1	SUPPORT, , ASN D278
24	84057282	1	PRE-CLEANER ASSY, AIR,
25	89706690	2	NUT, M8, Cl 8,

02.23(01) INTAKE, AIR FILTER - C347

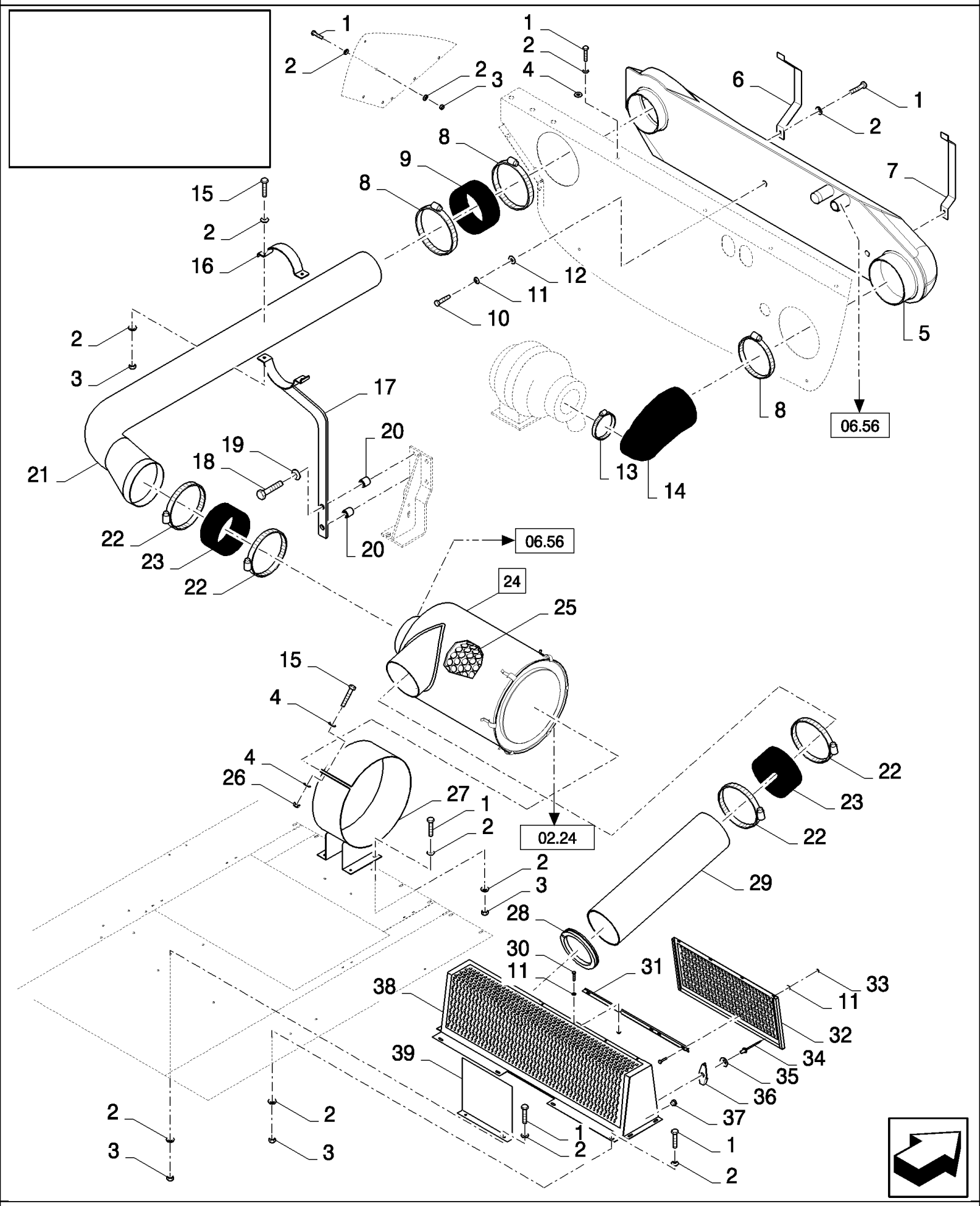

CX880 COMBINE - BASE UNIT (2/01-)

02.23(01) INTAKE, AIR FILTER - C347

ссылка	Номер детали	Кол-во	Описание
1	120104	AR	SCREW, Hex, M8 x 20, 8.8,
2	322358	AR	WASHER, SPRING, Belleville, M8,
3	89706690	AR	NUT, M8, Cl 8,
4	378243	5	WASHER, M8,
5	84434895	1	MANIFOLD,
6	84077461	1	SUPPORT,
7	84077457	1	SUPPORT,
8	84012068	3	CLAMP,
9	84434106	1	HOSE,
10	86977786	1	BOLT, Hex, M6 x 25, 8.8,
11	322357	9	WASHER, SPRING, Belleville, M6,
12	140040	1	WASHER, M6 x 22 x 2,
13	89706924	1	CLAMP,
14	84432610	1	ELBOW, , BSN C237
14	84440121	1	ELBOW, , ASN D238
15	43129	4	BOLT, Hex, M8 x 40, 8.8,
16	84438845	1	CLAMP,
17	84438839	1	SUPPORT,
18	355259	2	SCREW, Hex, M16 x 65, 8.8, M16x65
19	140048	2	WASHER, SPRING, Belleville, M16,
20	84437465	2	BUSHING,
21	84437680	1	TUBE,
22	80449815	4	CLAMP,
23	84437590	2	HOSE,
24	84072290	1	AIR CLEANER, (25)
25	84432504	1	FILTER, ELEMENT, INNER
25	84432503	1	FILTER, ELEMENT, OUTER
26	86629542	2	NUT, LOCK, M8 x 1.25, Cl 8,
27	84438666	1	SUPPORT,
28	80401310	1	PROFILE,
29	84443618	1	TUBE,
30	378056	8	BOLT, Hex, M6 x 10, 8.8, Full Thd,
31	9512708	1	HINGE,
32	84438701	1	DOOR,
33	15896221	8	NUT, M6, Cl 10,
34	NS	2	NOT SERVICED,
35	362785	2	WASHER,
36	362786	2	FASTENER,
37	331233	2	PLUG,
38	84438699	1	PRE-CLEANER ASSY, AIR,
39	84439598	1	PLATE,

02.24(01) EXHAUST AND AIR FILTER

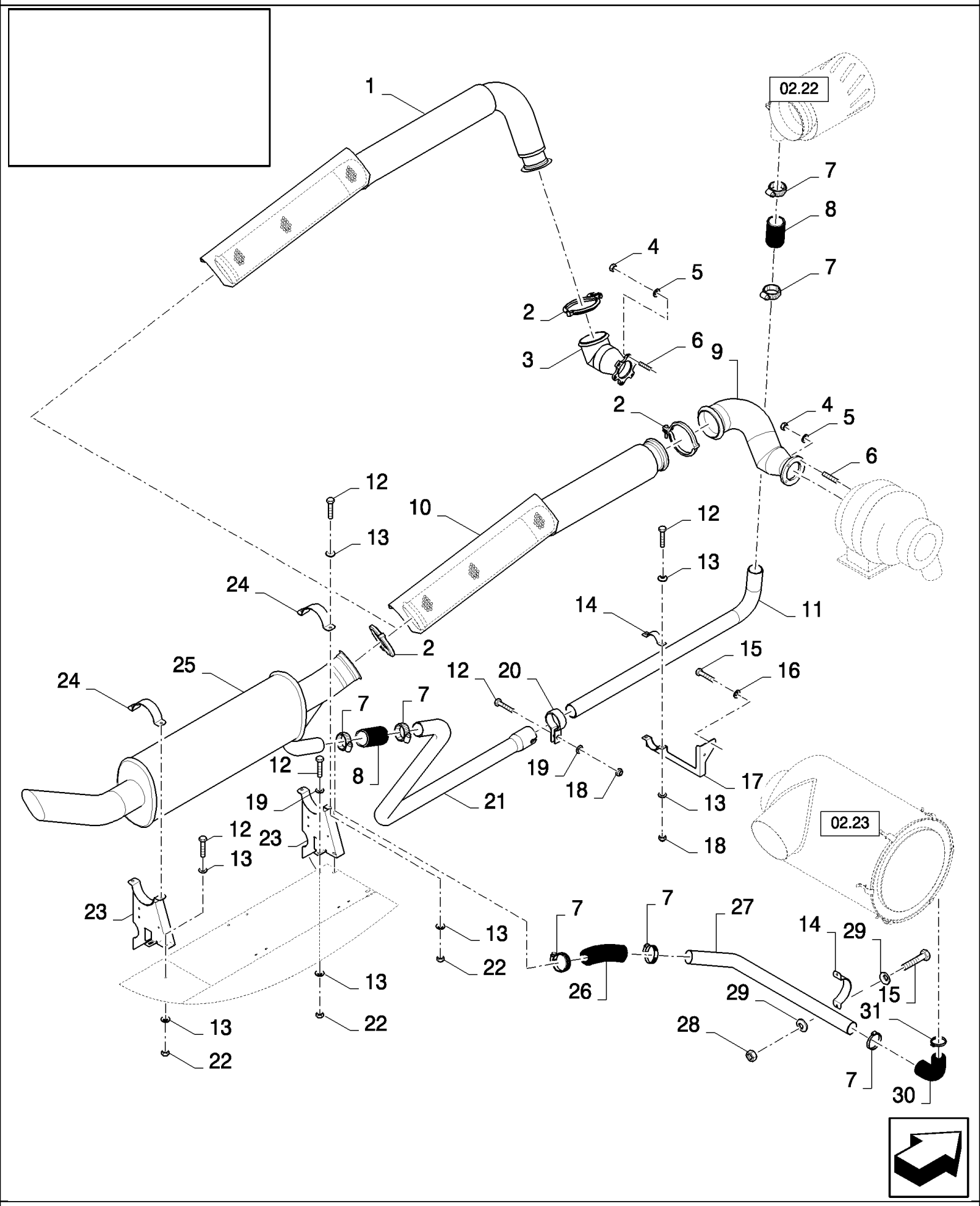

CX880 COMBINE - BASE UNIT (2/01-)

02.24(01) EXHAUST AND AIR FILTER

ссылка	Номер детали	Кол-во	Описание
1	84432493	1	TUBE, , FOR CX880 ONLY
2	84334240	2	ELASTIC STRAP,
3	84432468	1	ELBOW, , FOR CX880 ONLY
4	84041352	6	NUT, LOCK, M8 x 1.25, Cl8.8, , FOR CX880 ONLY
4	84041352	4	NUT, LOCK, M8 x 1.25, Cl8.8, , FOR 3.3 M VERSION OF CX820 ONLY, FOR CX780, CX840 ONLY
4	84041352	4	NUT, LOCK, M8 x 1.25, Cl8.8, , FOR 3 M VERSION OF CX820 ONLY, FOR CX720, CX740, CX760 ONLY, BSN C347
4	84442904	4	NUT, LOCK, M10 x 1.5, Cl 8.8, , FOR CX720, CX740, CX760 ONLY, FOR 3 M VERSION OF CX820 ONLY, ASN D348
5	322358	6	WASHER, SPRING, Belleville, M8, , FOR CX880 ONLY
5	322358	4	WASHER, SPRING, Belleville, M8, , FOR CX720, CX740, CX760, CX780, CX820, CX840 ONLY
6	84031344	6	STUD, , FOR CX880 ONLY
6	84031344	4	STUD, , FOR CX780, CX840 ONLY, FOR 3.3 M VERSION OF CX820 ONLY
6	84031344	4	STUD, , FOR 3 M VERSION OF CX820 ONLY, FOR CX720, CX740, CX760 ONLY, BSN C347
6	110020	4	STUD, , FOR CX720, CX740, CX760 ONLY, FOR 3 M VERSION OF CX820 ONLY, ASN D348
7	556701	AR	CLAMP,
8	84011850	2	HOSE,
8	84011850	2	HOSE, , FOR CX880 ONLY, BSN C237
8	84011850	2	HOSE, , FOR CX880 ONLY, ASN D348
9	84076820	1	TUBE, , FOR CX860 ONLY
9	84077433	1	TUBE, , FOR 3.3 M VERSION OF CX820 ONLY, FOR CX780, CX840 ONLY
9	84077433	1	TUBE, , FOR 3 M VERSION OF CX820 ONLY, FOR CX720, CX740, CX760 ONLY, BSN C347
9	84448615	1	TUBE, , FOR CX720, CX740, CX760 ONLY, FOR 3 M VERSION OF CX820 ONLY, ASN D348
10	84077450	1	TUBE, , FOR CX860 ONLY, FOR CX720, CX740, CX760, CX780, CX820, CX840 ONLY
11	84334960	1	TUBE,
11	84334960	1	TUBE, , FOR CX880 ONLY, BSN C237
11	84334960	1	TUBE, , FOR CX880 ONLY, ASN D348
12	120104	AR	SCREW, Hex, M8 x 20, 8.8,
13	322358	AR	WASHER, SPRING, Belleville, M8,
14	84037158	1	CLAMP,
15	43138	2	SCREW, Hex, M10 x 20, 8.8, Full Thd,
16	140045	2	WASHER, SPRING, Belleville, M10,
17	84077542	1	SUPPORT,
17	84077542	1	SUPPORT, , FOR CX880 ONLY, BSN C237
17	84077542	1	SUPPORT, , FOR CX880 ONLY, ASN D348
18	86629542	3	NUT, LOCK, M8 x 1.25, Cl 8,
19	378243	2	WASHER, M8,
20	84015625	1	CLAMP,
20	84015625	1	CLAMP, , FOR CX880 ONLY, BSN C237
20	84015625	1	CLAMP, , FOR CX880 ONLY, ASN D348
21	84071871	1	TUBE,
21	84071871	1	TUBE, , FOR CX880 ONLY, BSN C237
21	84071871	1	TUBE, , FOR CX880 ONLY, ASN D348
22	89706690	7	NUT, M8, Cl 8,

CX880 COMBINE - BASE UNIT (2/01-)

02.24(01) EXHAUST AND AIR FILTER

ссылка	Номер детали	Кол-во	Описание
23	84076616	2	SUPPORT,
24	84076615	2	CLAMP,
25	84433024	1	MUFFLER, , FOR CX880 ONLY
25	84052935	1	MUFFLER, , FOR CX860 ONLY, FOR CX720, CX740, CX760, CX820, CX840 ONLY
25	84052935	1	MUFFLER, , FOR CX780 ONLY, BSN C323
25	84061610	1	MUFFLER, , FOR CX780 ONLY, ASN D324
26	84334353	1	HOSE, , FOR CX880 ONLY, BSN F238347
27	84438797	1	TUBE, , FOR CX880 ONLY, BSN F238347
28	100037	2	NUT, M10 x 1.5, Cl 8, , FOR CX880 ONLY, BSN F238347
29	140042	4	WASHER, M10 x 34 x 3, , FOR CX880 ONLY, BSN F238347
30	84438805	1	HOSE, , FOR CX880 ONLY, BSN F238347
31	360747	1	CLAMP, , FOR CX880 ONLY, BSN F238347

02.25(01) ROTARY SCREEN : FRAME AND FAN

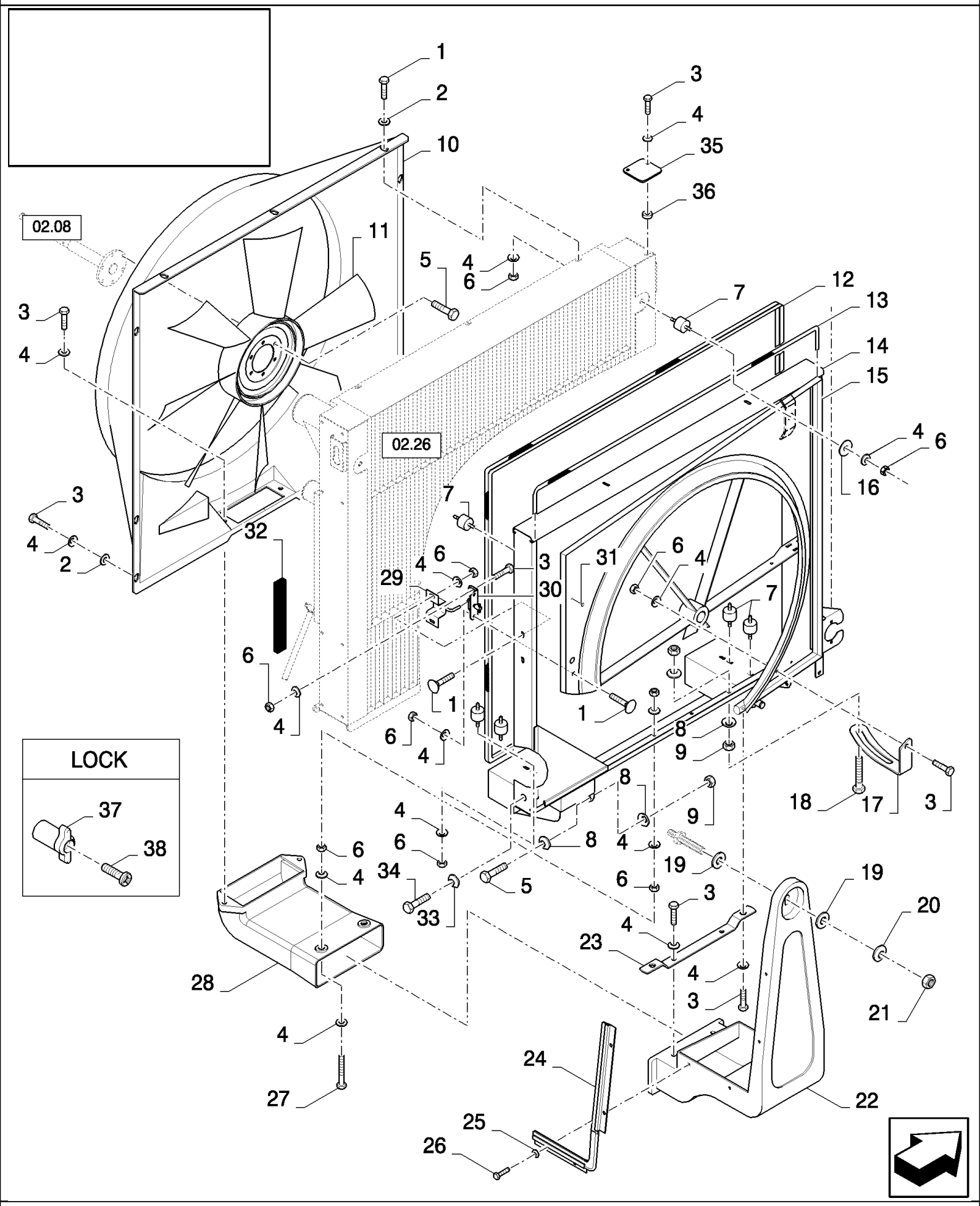

CX880 COMBINE - BASE UNIT (2/01-)

02.25(01) ROTARY SCREEN : FRAME AND FAN

ссылка	Номер детали	Кол-во	Описание
1	86507486	AR	BOLT, CARRIAGE, Short NK, M8 x 20, Cl8.8, Full Thd,
2	140041	9	WASHER, M8 x 28 x 3,
3	16043224	AR	BOLT, Hex, M8 x 16, 8.8, Full Thd,
3	120104	AR	SCREW, Hex, M8 x 20, 8.8,
3	43127	AR	BOLT, Hex, M8 x 25, 8.8,
3	43128	AR	BOLT, Hex, M8 x 30, 8.8,
4	322358	AR	WASHER, SPRING, Belleville, M8,
5	43139	AR	SCREW, Hex, M10 x 25, 8.8, Full Thd, M10x25
6	89706690	AR	NUT, M8, Cl 8,
7	84057804	6	DAMPER, , BSN C375
8	140045	AR	WASHER, SPRING, Belleville, M10,
9	100016	AR	NUT, M10, Cl 8,
10	84057062	1	HOUSING, FAN,
11	84057048	1	FAN,
11	87329017	1	FAN, , FOR HIGH FAN SPEED ONLY
12	80401209	AR	SEAL PROTECTION, SEAL, BSN C375
13	84056063	1	SEAL PROTECTION, L: 6M
14	84069707	1	SUPPORT, , BSN C375
15	84069710	1	SUPPORT, , BSN C237
15	84439854	1	SUPPORT, , ASN D238
16	140075	2	WASHER, 8MM, BSN C375
17	84075332	1	SUPPORT,
18	120117	1	BOLT, Hex, M10 x 110, 8.8, Full Thd,
18	120074	1	BOLT, Hex, M10 x 90, 8.8,
19	378245	2	WASHER, M12, , BSN C237
19	543043	2	WASHER, , ASN D238
20	140046	1	WASHER, Belleville, M12,
21	9706685	1	NUT, M12, Cl 8,
22	84064227	1	DUCT, AIR,
23	84077748	1	SUPPORT,
24	84057946	1	BRUSH,
25	322355	4	WASHER, Belleville, M4,
26	86585706	4	SCREW, Cross Pan Hd, M4 x 10,
27	120061	2	BOLT, Hex, M8 x 60, 8.8, , BSN C237
27	300382	2	BOLT, Hex, M8 x 60, 8.8, Full Thd, , BSN F238273
27	86977784	2	SCREW, , ASN D274
28	84064228	1	CHANNEL, , FOR CX860 ONLY, FOR CX880 ONLY
28	84064229	1	DUCT, AIR, , FOR CX720, CX740, CX760, CX780, CX820, CX840 ONLY
29	84057181	1	SUPPORT,
30	84431232	1	LOCK,
31	331233	3	PLUG,
32	84017379	AR	ELEMENT, SEALING,
33	412649	1	WASHER, SPRING, Belleville, M6, , BSN C375
34	120100	1	BOLT, Hex, M6 x 20, 8.8, , BSN C375

02.25(01) ROTARY SCREEN : FRAME AND FAN

ссылка	Номер детали	Кол-во	Описание
35	84454091	1	PLATE, , ASN D376
36	9812123	1	RING, , ASN D376
37	87031838	1	KNOB,
38	86511831	1	SCREW, Cross Pan Hd, M6 x 25, M6x25

02.26(01) COOLERS - C375

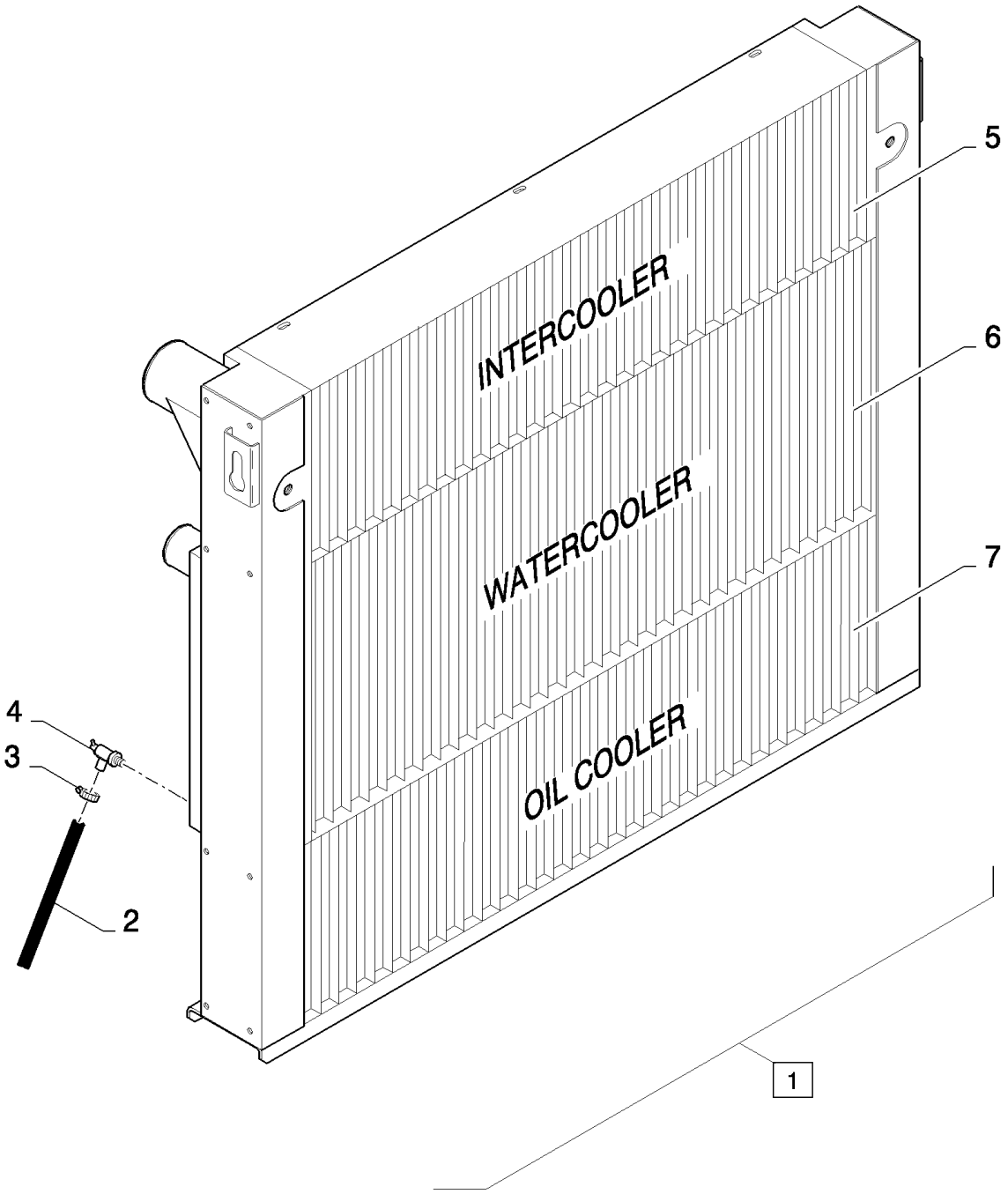

CX880 COMBINE - BASE UNIT (2/01-)

02.26(01) COOLERS - C375

ссылка	Номер детали	Кол-во	Описание
1	NS	1	NOT SERVICED, COOLER
2	398094	1	HOSE, HYDRAULIC,
3	913888	1	CLAMP, HOSE,
4	441031	1	DRAINCOCK/TAP, SUPPLY,
5	84061750	1	INTERCOOLER, , FOR CX860, CX880 ONLY
5	84053847	1	INTERCOOLER, , FOR CX720, CX740, CX760, CX780, CX820, CX840 ONLY
6	84061751	1	RADIATOR, , FOR CX860, CX880 ONLY
6	84053848	1	RADIATOR, , FOR CX720, CX740, CX760, CX780, CX820, CX840 ONLY
7	84061752	1	COOLER, OIL, , FOR CX860, CX880 ONLY
7	84053846	1	COOLER, OIL, , FOR CX720, CX740, CX760, CX780, CX820, CX840 ONLY

02.26(02) COOLERS - D376

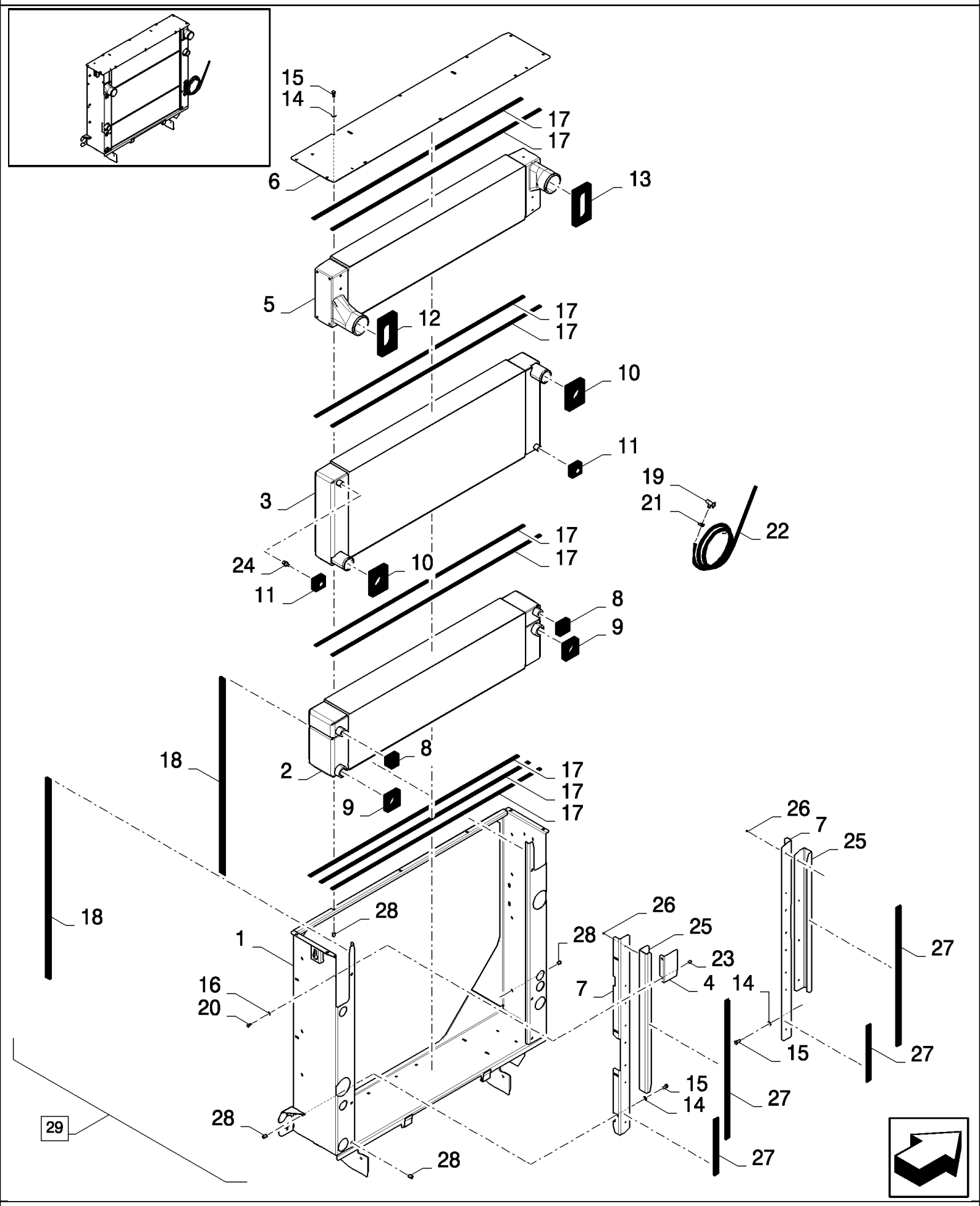

CX880 COMBINE - BASE UNIT (2/01-)

02.26(02) COOLERS - D376

ссылка	Номер детали	Кол-во	Описание
1	87324821	1	FRAME, , FOR CX860, CX880 ONLY
1	87325295	1	FRAME ASSY, , FOR CX720, CX740, CX760, CX780, CX820, CX840 ONLY
2	84452798	1	COOLER, OIL, , FOR CX860, CX880 ONLY
2	84452785	1	COOLER, OIL, , FOR CX720, CX740, CX760, CX780, CX820, CX840 ONLY
3	84452784	1	RADIATOR, , FOR CX860 ONLY
3	84452800	1	RADIATOR, , FOR CX880 ONLY
3	84452846	1	RADIATOR, , FOR CX720, CX740, CX760, CX820 ONLY
3	84452784	1	RADIATOR, , FOR CX780, CX840 ONLY
4	87316857	1	PLATE,
5	84452783	1	INTERCOOLER, , FOR CX860 ONLY
5	84452799	1	INTERCOOLER, , FOR CX880 ONLY
5	84452845	1	INTERCOOLER, , FOR CX720, CX740, CX760, CX820 ONLY
5	84452783	1	INTERCOOLER, , FOR CX780, CX840 ONLY
6	87324852	1	PLATE, , FOR CX860, CX880 ONLY
6	87325316	1	PLATE ASSY., , FOR CX720, CX740, CX760, CX780, CX820, CX840 ONLY
7	87325425	2	PLATE,
8	87326785	2	RUBBER,
9	87318582	2	RUBBER,
10	87318587	2	RUBBER,
11	87318590	2	RUBBER,
12	87318589	1	RUBBER,
13	87318588	1	RUBBER,
14	80322358	14	WASHER,
15	120104	14	SCREW, Hex, M8 x 20, 8.8,
16	80322357	2	WASHER, SPRING, Belleville, M6, 6MM
17	80400987	AR	SEAL,
18	87324720	AR	SEAL PROTECTION,
19	80441031	1	DRAINCOCK/TAP, SUPPLY,
20	86508568	2	SCREW, Hex, M6 x 16, 8.8,
21	80913888	1	CLAMP,
22	80400813	AR	HOSE,
23	84983191	5	RIVET,
24	80395779	1	
25	87327128	2	PLATE, , FOR CX860 ONLY
25	87327271	2	PLATE, , FOR CX720, CX740, CX760, CX820 ONLY
26	80455959	8	, FOR CX720, CX740, CX760, CX820 ONLY, FOR CX860 ONLY
27	80401278	AR	SEAL, , FOR CX860 ONLY, FOR CX880 ONLY, FOR CX780, CX840 ONLY
28	84983188	24	RIVET,
29	84447296	1	RADIATOR, (1 to 28), FOR CX860 ONLY
29	84447290	1	RADIATOR, (1 to 28), FOR CX880 ONLY
29	84452414	1	RADIATOR, (1 to 28), FOR CX720, CX740, CX760, CX820 ONLY
29	84447294	1	RADIATOR, (1 to 28), FOR CX780, CX840 ONLY

02.27(01) WATER CIRCUIT, SHUNT TANK

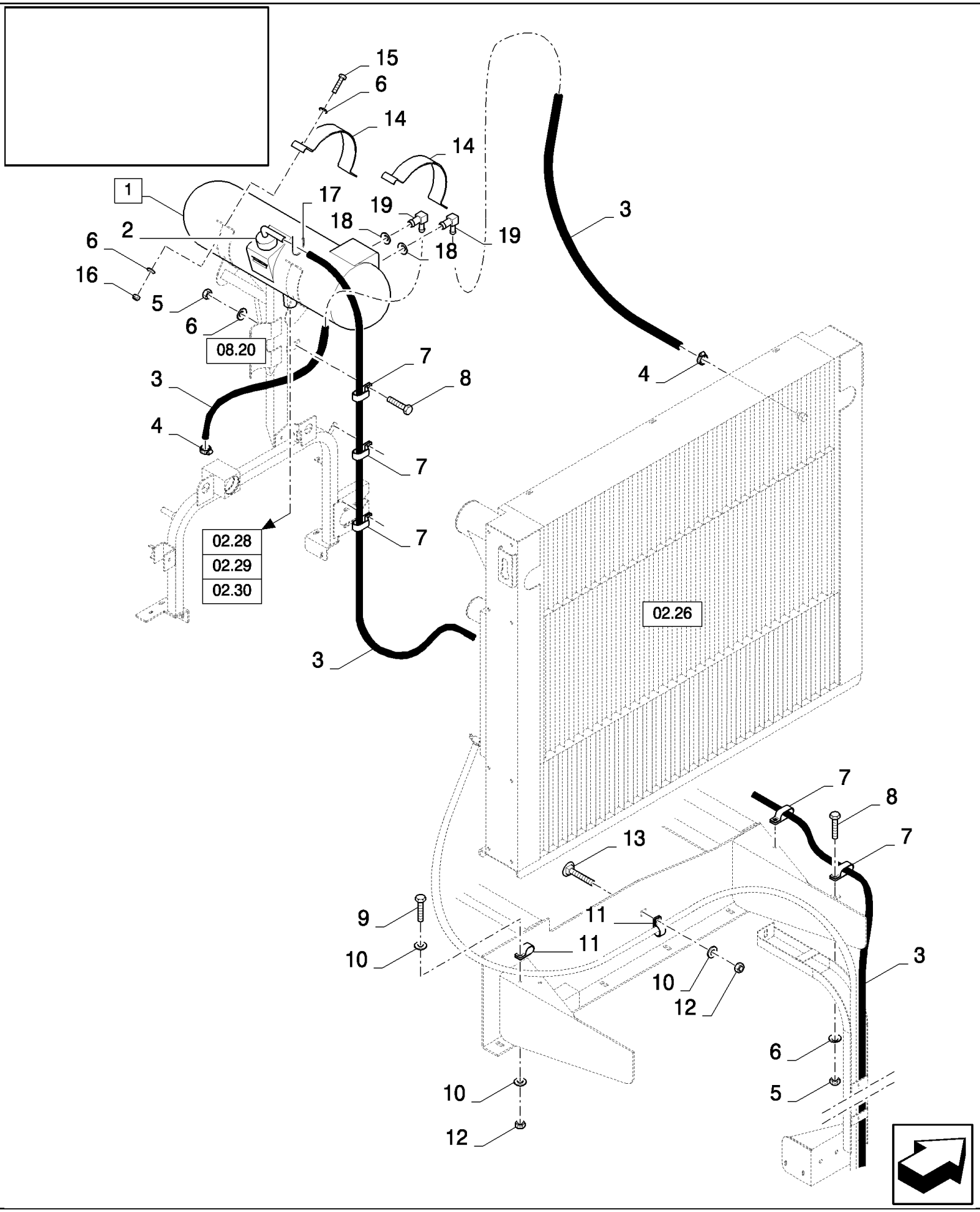

CX880 COMBINE - BASE UNIT (2/01-)

02.27(01) WATER CIRCUIT, SHUNT TANK

ссылка	Номер детали	Кол-во	Описание
1	84057073	1	TANK, (2), FOR CX720, CX740, CX760, CX780, CX820, CX840 ONLY, BSN C285
1	84442802	1	TANK, (2,18,19), FOR CX720, CX740, CX760, CX780, CX820, CX840 ONLY, ASN D286
1	84069936	1	TANK, (2), FOR CX860, CX880 ONLY, BSN C285
1	84442803	1	TANK, (2,18,19), FOR CX860, CX880 ONLY, ASN D286
2	84072957	1	CAP,
3	NS	AR	NOT SERVICED, Hose
4	913888	2	CLAMP, HOSE,
5	89706690	5	NUT, M8, Cl 8,
6	322358	13	WASHER, SPRING, Belleville, M8,
7	417412	5	CLAMP,
8	43127	5	BOLT, Hex, M8 x 25, 8.8,
9	120100	1	BOLT, Hex, M6 x 20, 8.8,
10	412649	3	WASHER, SPRING, Belleville, M6,
11	431351	2	CLAMP,
12	15896221	2	NUT, M6, Cl 10,
13	9706703	1	BOLT, CARRIAGE, Short NK, M6 x 20, Cl8.8, Full Thd, , BSN C225
14	84076174	2	CLAMP,
15	43129	4	BOLT, Hex, M8 x 40, 8.8,
16	86629542	4	NUT, LOCK, M8 x 1.25, Cl 8, , BSN C225
16	86629542	4	NUT, LOCK, M8 x 1.25, Cl 8, , ASN D226
17	913888	1	CLAMP, HOSE, , BSN C265
17	86566989	1	STRAP, CABLE, , ASN D266
18	86532842	AR	BUSHING,
19	87050320	AR	ELBOW,

02.30(01) WATER CIRCUIT

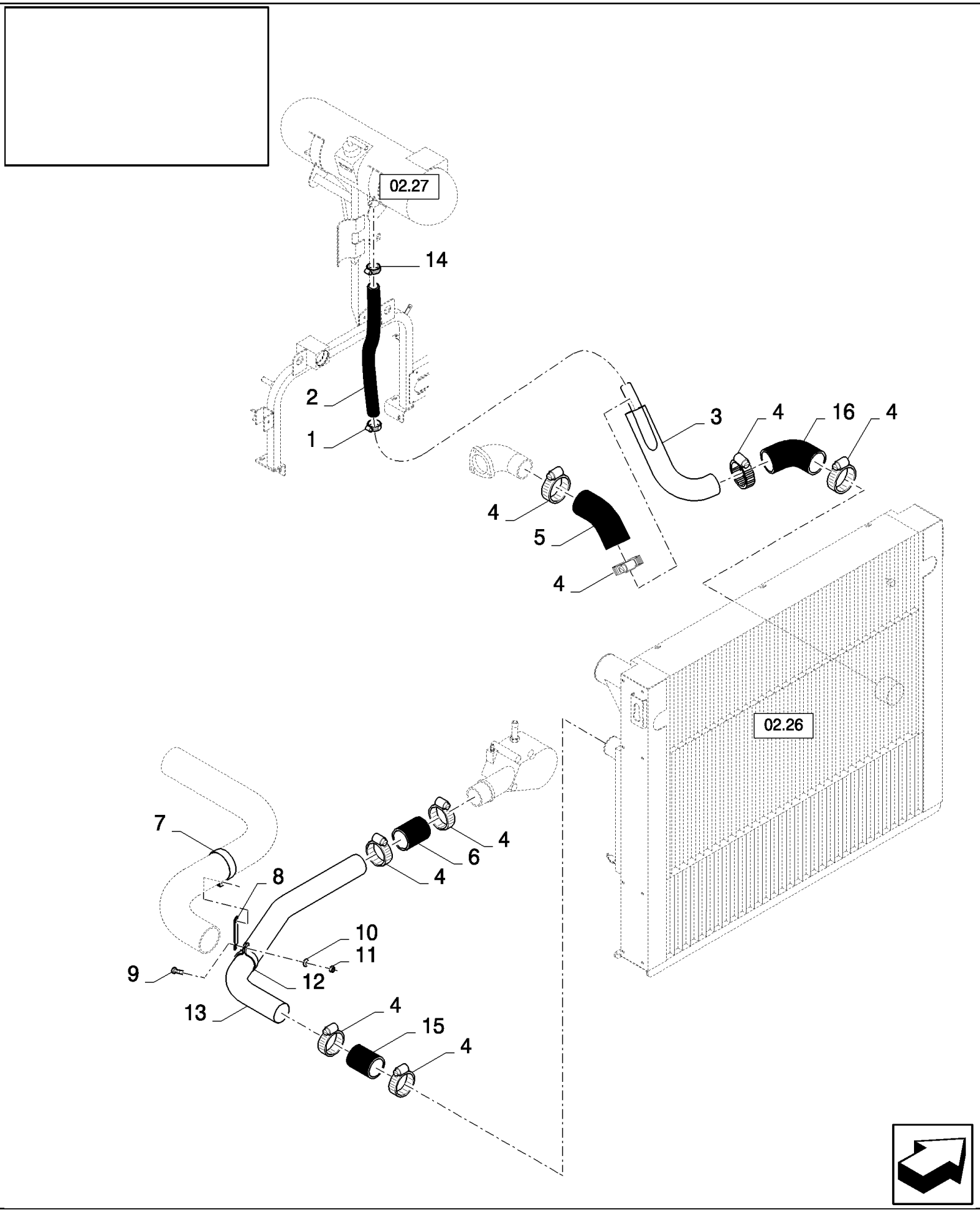

CX880 COMBINE - BASE UNIT (2/01-)

02.30(01) WATER CIRCUIT

ссылка	Номер детали	Кол-во	Описание
1	382527	2	CLAMP, HOSE,
2	84057739	1	HOSE,
3	84432312	1	TUBE,
4	556701	8	CLAMP,
5	84012945	1	HOSE,
6	89833673	1	HOSE,
7	84038691	1	CLAMP,
8	84071569	1	BRACKET,
9	43128	2	BOLT, Hex, M8 x 30, 8.8,
10	322358	2	WASHER, SPRING, Belleville, M8,
11	89706690	2	NUT, M8, Cl 8,
12	84015625	1	CLAMP,
13	84432307	1	TUBE,
14	382527	1	CLAMP, HOSE, , BSN C225
14	382528	1	CLAMP, , ASN D226
15	89833673	1	HOSE, , BSN C375
15	84432641	1	HOSE, , ASN D376
16	84012945	1	HOSE, , BSN C375
16	84448807	1	HOSE, , BSN F376479
16	84012945	1	HOSE, , ASN D480

02.31(01) AIR CIRCUIT

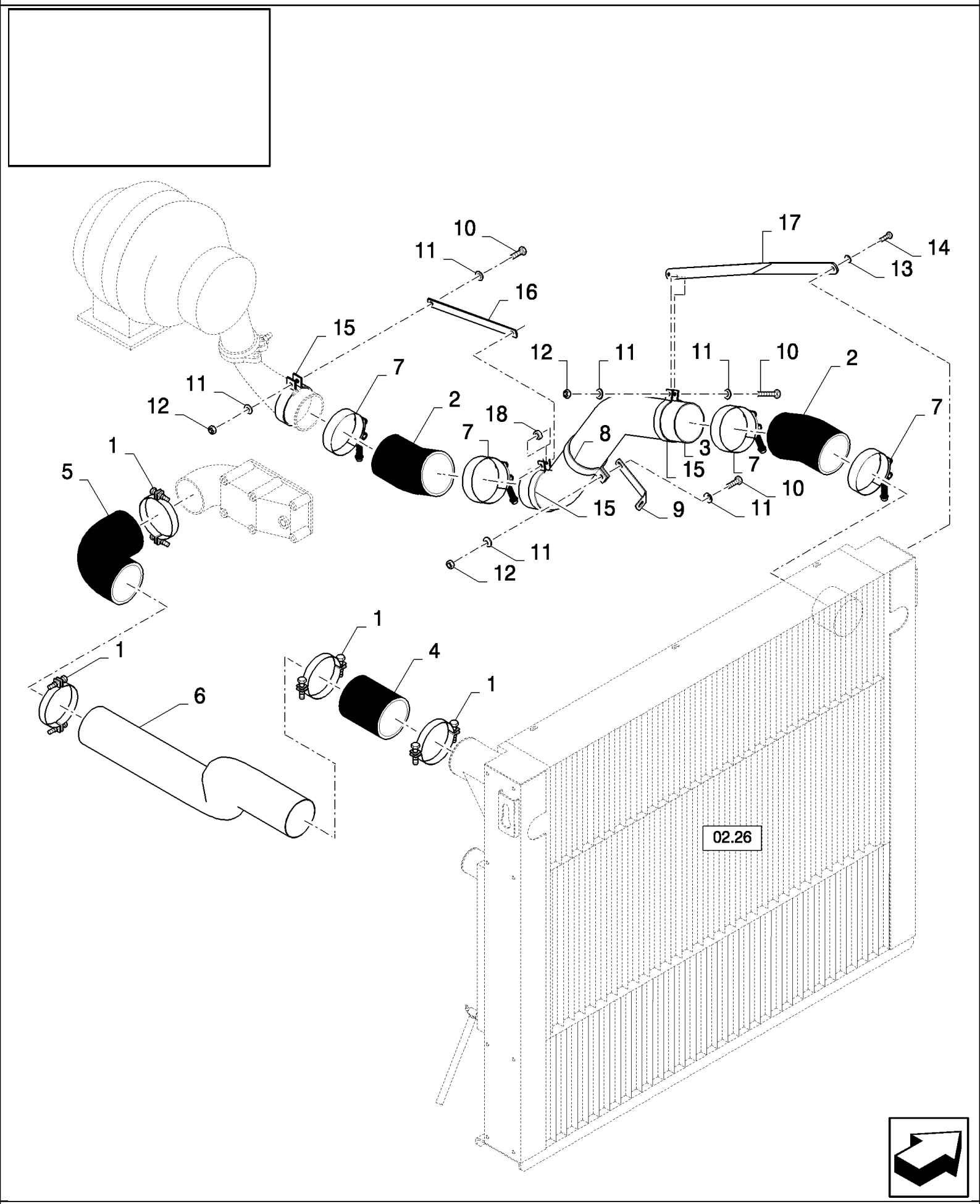

CX880 COMBINE - BASE UNIT (2/01-)

02.31(01) AIR CIRCUIT

ссылка	Номер детали	Кол-во	Описание
1	84021019	4	CLAMP,
2	84077562	2	ELBOW, , FOR CX860 ONLY
2	84015286	2	TUBE, , FOR CX880 ONLY
3	84433218	1	TUBE, , FOR CX860 ONLY, BSN C379
3	84453310	1	TUBE, , FOR CX860 ONLY, ASN D380
3	84432799	1	TUBE, , FOR CX880 ONLY, BSN C379
3	84453321	1	TUBE, , FOR CX880 ONLY, ASN D380
4	84015286	1	TUBE,
5	84061537	1	HOSE,
6	84071873	1	TUBE, , FOR CX860 ONLY, BSN C379
6	84453309	1	TUBE, , FOR CX860 ONLY, ASN D380
6	84432782	1	TUBE, , FOR CX880 ONLY, BSN C379
6	84453325	1	TUBE, , FOR CX880 ONLY, ASN D380
7	84021019	4	CLAMP, , BSN C265
7	84075957	4	CLAMP, , BSN F266351
7	84057504	4	CLAMP, , ASN D352
8	84038691	1	CLAMP, , BSN C375
9	84446340	1	SUPPORT, , FOR CX860 ONLY, BSN C375
9	84446349	1	SUPPORT, , FOR CX880 ONLY, BSN C375
10	43127	AR	BOLT, Hex, M8 x 25, 8.8,
11	322358	AR	WASHER, SPRING, Belleville, M8,
12	89706690	AR	NUT, M8, Cl 8,
13	412649	1	WASHER, SPRING, Belleville, M6, , ASN D376
14	86977786	1	BOLT, Hex, M6 x 25, 8.8, , ASN D376
15	84455404	3	CLAMP, , ASN D376
16	84454895	1	BRACKET, , ASN D376
17	84455352	1	BRACKET, , FOR CX860 ONLY, ASN D376
17	84455353	1	BRACKET, , FOR CX880 ONLY, ASN D376
18	9812123	1	RING, , ASN D388

02.35(01) BLOW-OFF SYSTEM, AIR GUN

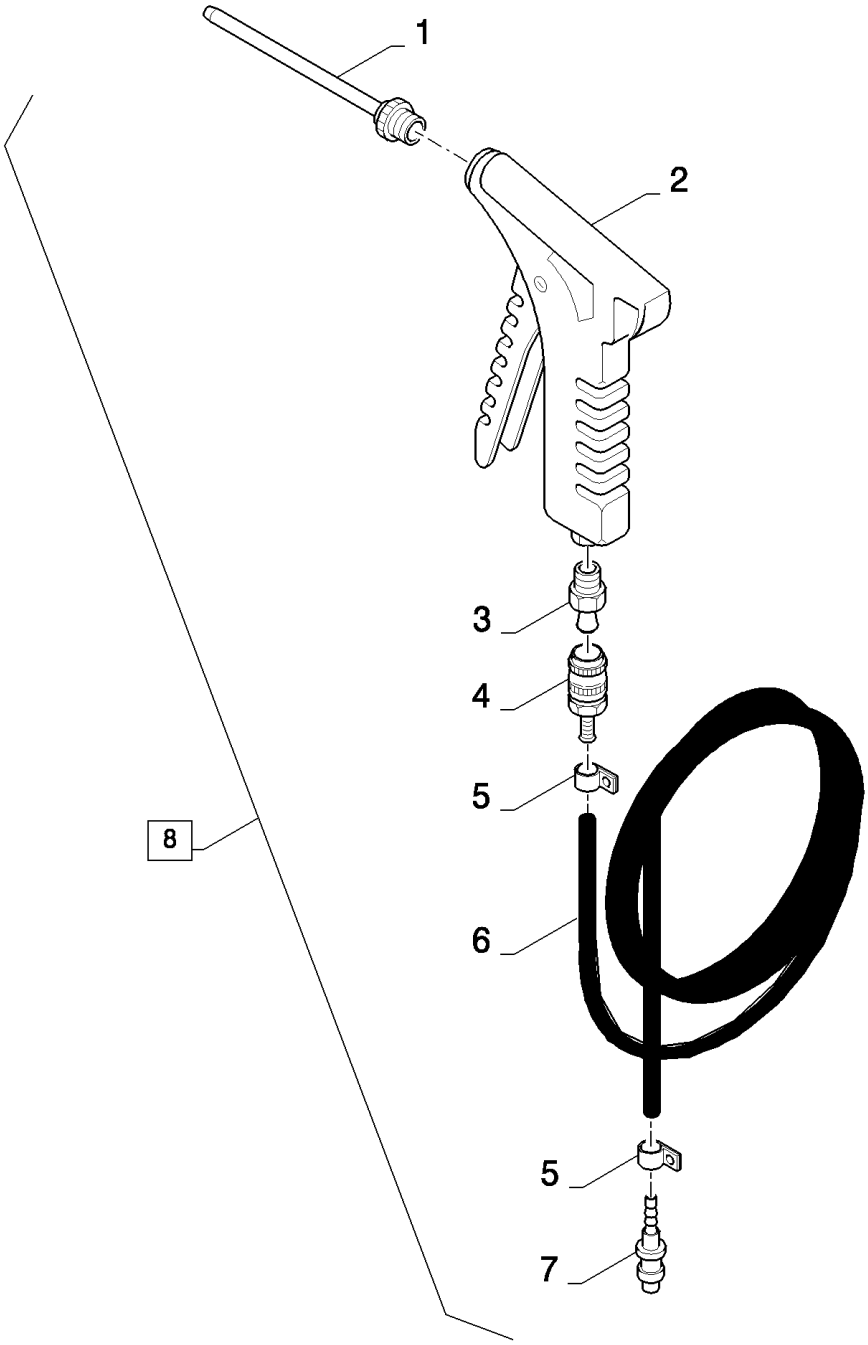

CX880 COMBINE - BASE UNIT (2/01-)

02.35(01) BLOW-OFF SYSTEM, AIR GUN

ссылка	Номер детали	Кол-во	Описание
1	84043496	1	TUBE,
2	84043495	1	AIR GUN,
3	84043494	1	FITTING,
4	84043493	1	COUPLING, QUICK, MALE,
5	80150064	2	CLAMP,
6	84045058	1	HOSE, L:25M
7	84043492	1	FITTING,
8	84045084	1	HOSE, FLEXIBLE, (1 to 7)

02.36(01) BLOW-OFF SYSTEM, AIR COMPRESSOR

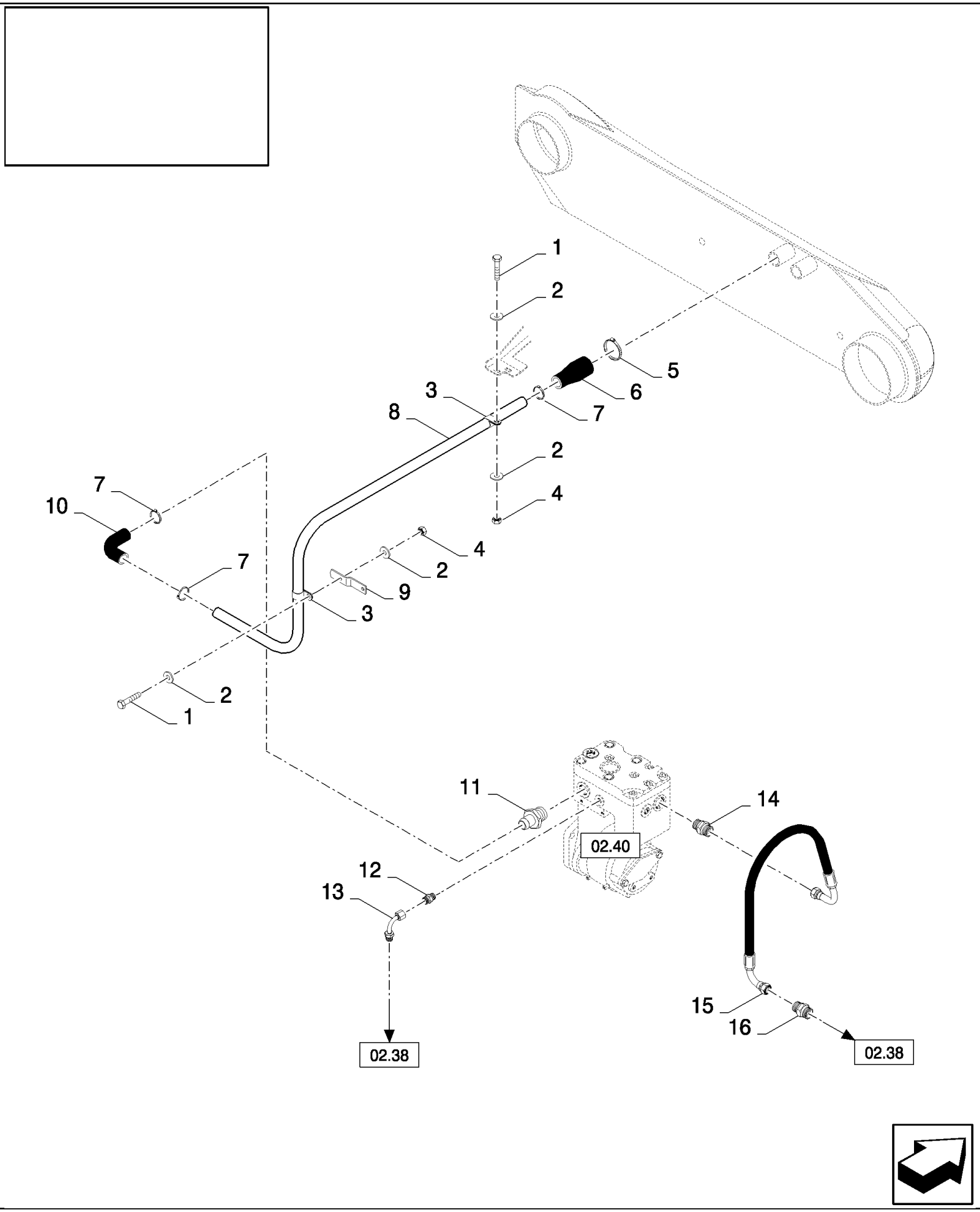

CX880 COMBINE - BASE UNIT (2/01-)

02.36(01) BLOW-OFF SYSTEM, AIR COMPRESSOR

ссылка	Номер детали	Кол-во	Описание
1	120104	2	SCREW, Hex, M8 x 20, 8.8,
2	322358	4	WASHER, SPRING, Belleville, M8,
3	9827902	2	CLAMP, 1", Insul, 3/8" Bolt,
4	89706690	2	NUT, M8, Cl 8,
5	382528	1	CLAMP,
6	84073303	1	HOSE,
7	382527	3	CLAMP, HOSE,
8	84439273	1	TUBE,
9	84441195	1	SUPPORT,
10	84334134	1	HOSE,
11	84036669	1	CONNECTOR, HYD.,
12	89513082	1	CONNECTOR, HYD.,
13	418283	1	ELBOW,
14	84435826	1	CONNECTOR, HYD.,
15	84038319	1	HOSE, FLEXIBLE,
16	335174	1	CONNECTOR, HYD.,

02.38(01) BLOW OFF SYSTEM, TUBES

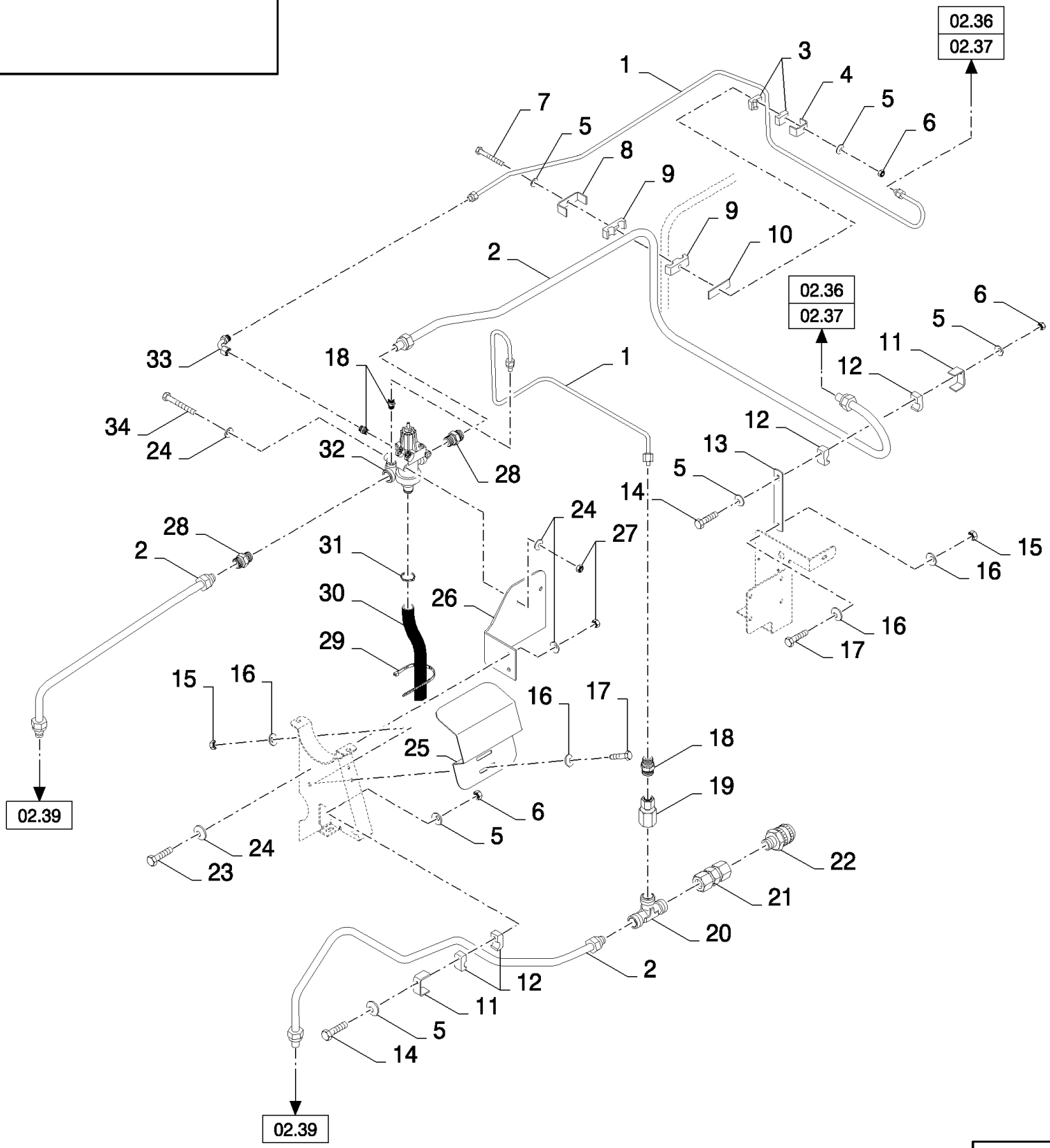

CX880 COMBINE - BASE UNIT (2/01-)

02.38(01) BLOW OFF SYSTEM, TUBES

ссылка	Номер детали	Кол-во	Описание
1	371540	AR	TUBE, RIGID, DIA:8MM, L:2M
2	371536	AR	TUBE, RIGID, DIA:16MM, L:2M
3	433008	2	CLAMP,
4	433101	1	SUPPORT,
5	140015	8	WASHER, 6MM
6	353308	2	NUT, M6 x 1, Cl 8,
7	86508570	1	SCREW, Hex, M6 x 80, 8.8,
8	431942	1	SUPPORT, Hex Hd, #10-32 x 1/2",
9	430356	2	CLAMP,
10	434103	1	PLATE,
11	433100	2	SUPPORT,
12	433007	4	CLAMP,
13	84440828	1	SUPPORT,
14	120056	2	SCREW, Hex, M6 x 50, 8.8,
15	15896221	3	NUT, M6, Cl 10,
16	322357	6	WASHER, SPRING, Belleville, M6,
17	120100	3	BOLT, Hex, M6 x 20, 8.8,
18	89513082	3	CONNECTOR, HYD.,
19	9838275	1	CONNECTOR, HYD.,
20	444325	1	CONNECTION, 3 WAY,
21	84433625	1	CONNECTOR, HYD.,
22	84043491	1	COUPLING, QUICK, MALE,
23	120104	2	SCREW, Hex, M8 x 20, 8.8,
24	322358	8	WASHER, SPRING, Belleville, M8,
25	84440904	1	SUPPORT,
26	84077604	1	SUPPORT,
27	89706690	4	NUT, M8, Cl 8,
28	9516263	2	CONNECTOR, HYD.,
29	89993154	2	CLAMP,
30	NS	AR	NOT SERVICED, , BSN C301
30	84446186	AR	HOSE, , ASN D302
31	382527	1	CLAMP, HOSE,
32	84440618	1	VALVE, PRESSURE RELIEF,
33	418283	1	ELBOW,
34	43133	2	SCREW, Hex, M8 x 80, 8.8,

02.39(01) BLOW-OFF SYSTEM, AIR RESERVOIR

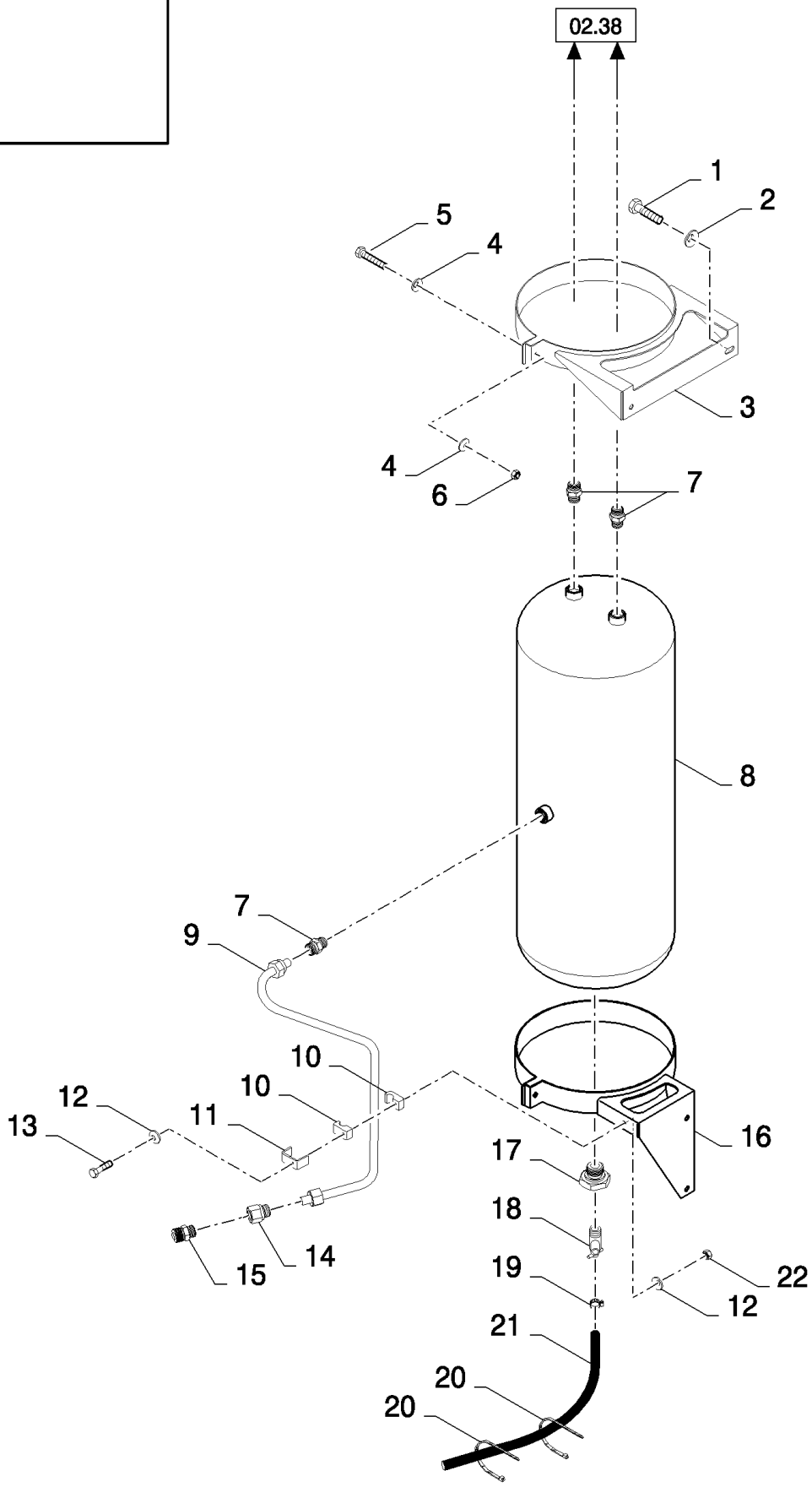

CX880 COMBINE - BASE UNIT (2/01-)

02.39(01) BLOW-OFF SYSTEM, AIR RESERVOIR

ссылка	Номер детали	Кол-во	Описание
1	43138	2	SCREW, Hex, M10 x 20, 8.8, Full Thd,
2	140045	2	WASHER, SPRING, Belleville, M10,
3	84076648	1	SUPPORT,
4	322358	4	WASHER, SPRING, Belleville, M8,
5	43129	2	BOLT, Hex, M8 x 40, 8.8,
6	86629542	2	NUT, LOCK, M8 x 1.25, Cl 8,
7	9516263	3	CONNECTOR, HYD.,
8	84036945	1	RESERVOIR, AIR,
9	371536	AR	TUBE, RIGID, DIA:16MM, L:2M
10	433007	2	CLAMP,
11	433100	1	SUPPORT,
12	140015	2	WASHER, 6MM
13	120056	1	SCREW, Hex, M6 x 50, 8.8,
14	84334928	1	CONNECTOR, HYD.,
15	84043491	1	COUPLING, QUICK, MALE,
16	84076635	1	SUPPORT,
17	84019122	1	CONNECTOR, HYD.,
18	441031	1	DRAINCOCK/TAP, SUPPLY,
19	913888	1	CLAMP, HOSE,
20	86566989	2	STRAP, CABLE,
21	80400813	AR	HOSE,
22	353308	1	NUT, M6 x 1, Cl 8,

02.40(01) BLOW-OFF SYSTEM, AIR COMPRESSOR

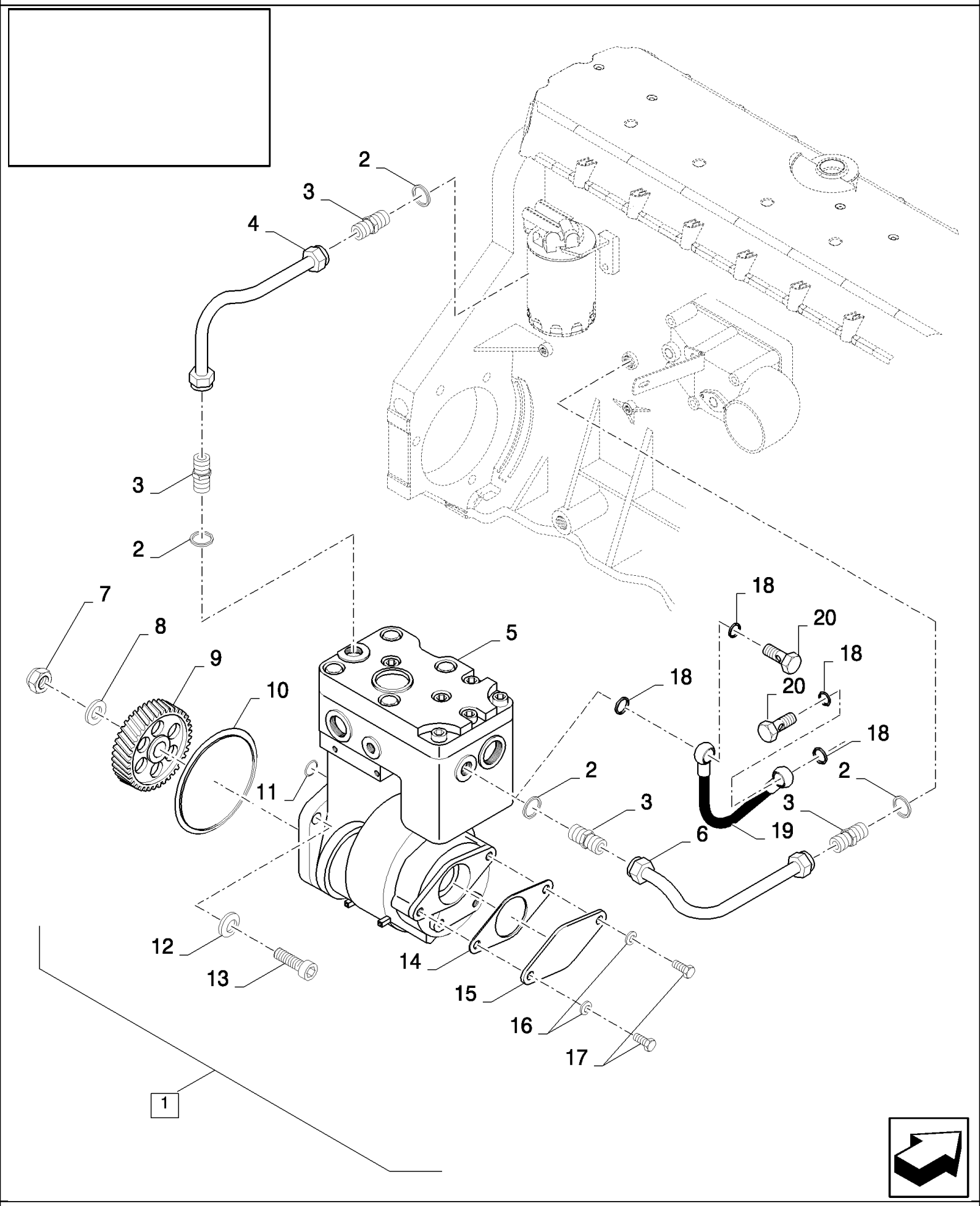

CX880 COMBINE - BASE UNIT (2/01-)

02.40(01) BLOW-OFF SYSTEM, AIR COMPRESSOR

ссылка	Номер детали	Кол-во	Описание
1	84441030	1	COMPRESSOR, AIR, (2 to 17)
2	84441041	4	WASHER, SEALING, , BSN C363
2	84441041	2	WASHER, SEALING, , ASN D364
3	84441042	4	CONNECTOR, HYD., , BSN C363
3	84441042	2	CONNECTOR, HYD., , ASN D364
4	84441043	1	TUBE,
5	NSS	1	NOT SERVICED SEPARATELY,
6	84441045	1	TUBE, , BSN C363
7	84441029	1	WASHER,
8	84441028	1	WASHER,
9	84441046	1	GEAR,
10	84441025	1	O-RING,
11	84441024	1	O-RING,
12	140046	3	WASHER, Belleville, M12,
13	84441027	3	BOLT,
14	84441023	1	WASHER, LOCK,
15	84441022	1	COVER,
16	140045	2	WASHER, SPRING, Belleville, M10,
17	43138	2	SCREW, Hex, M10 x 20, 8.8, Full Thd,
18	84441019	4	O-RING, , ASN D364
19	84819770	1	HOSE, FLEXIBLE, , ASN D364
20	84441021	2	SCREW, HOLLOW, , ASN D364

02.43(01) OIL SEPARATOR

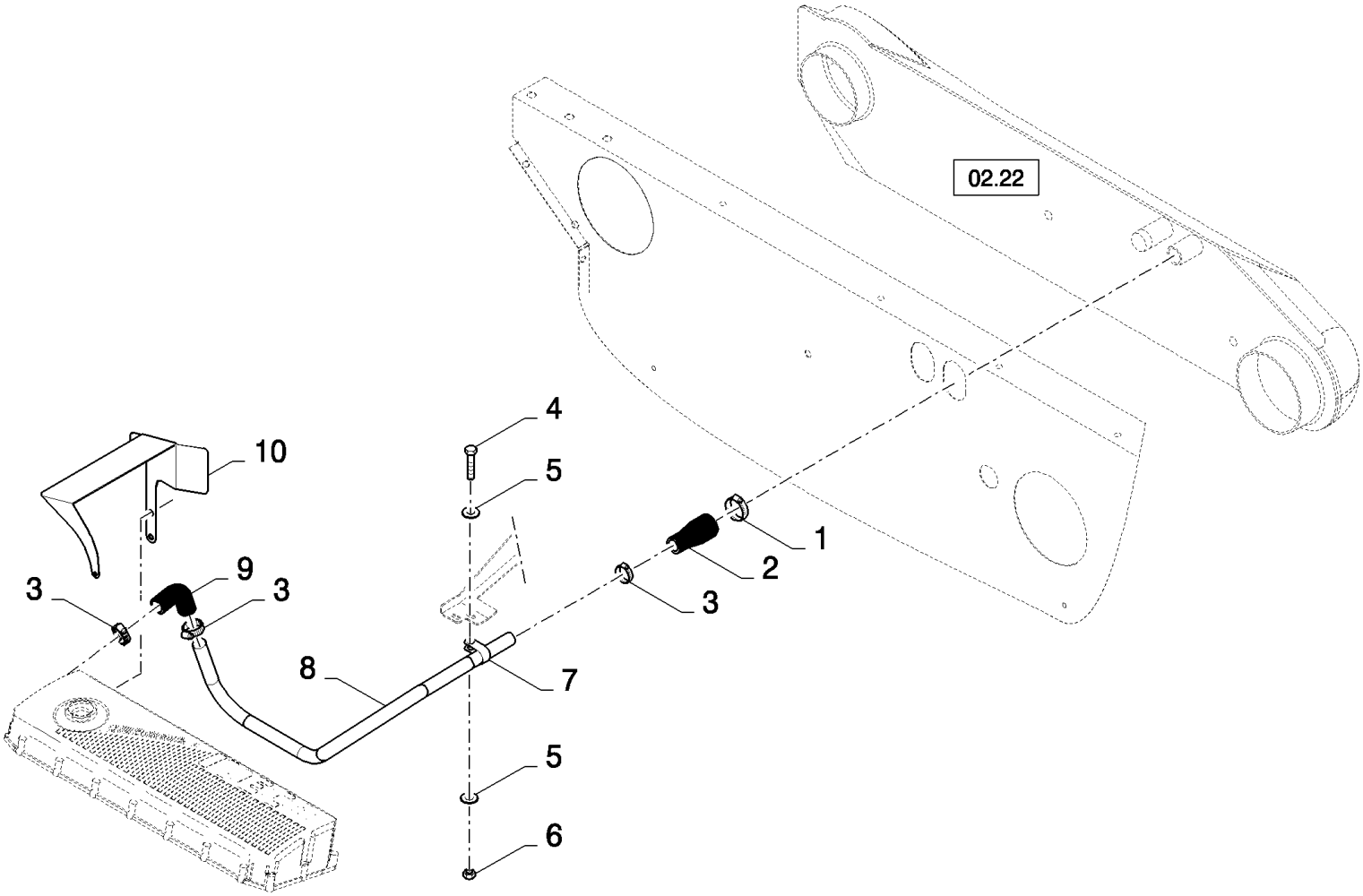

CX880 COMBINE - BASE UNIT (2/01-)

02.43(01) OIL SEPARATOR

ссылка	Номер детали	Кол-во	Описание
1	382528	1	CLAMP,
2	84073303	1	HOSE,
3	382527	3	CLAMP, HOSE,
4	120104	1	SCREW, Hex, M8 x 20, 8.8,
5	378243	2	WASHER, M8,
6	86629542	1	NUT, LOCK, M8 x 1.25, Cl 8,
7	9827902	1	CLAMP, 1", Insul, 3/8" Bolt,
8	84434410	1	TUBE, , FOR CX880 ONLY
8	84334053	1	TUBE, , FOR CX860 ONLY
9	84334134	1	HOSE,
10	84437734	1	PLATE, , FOR CX860 ONLY

02.44(01) OIL EXHAUST

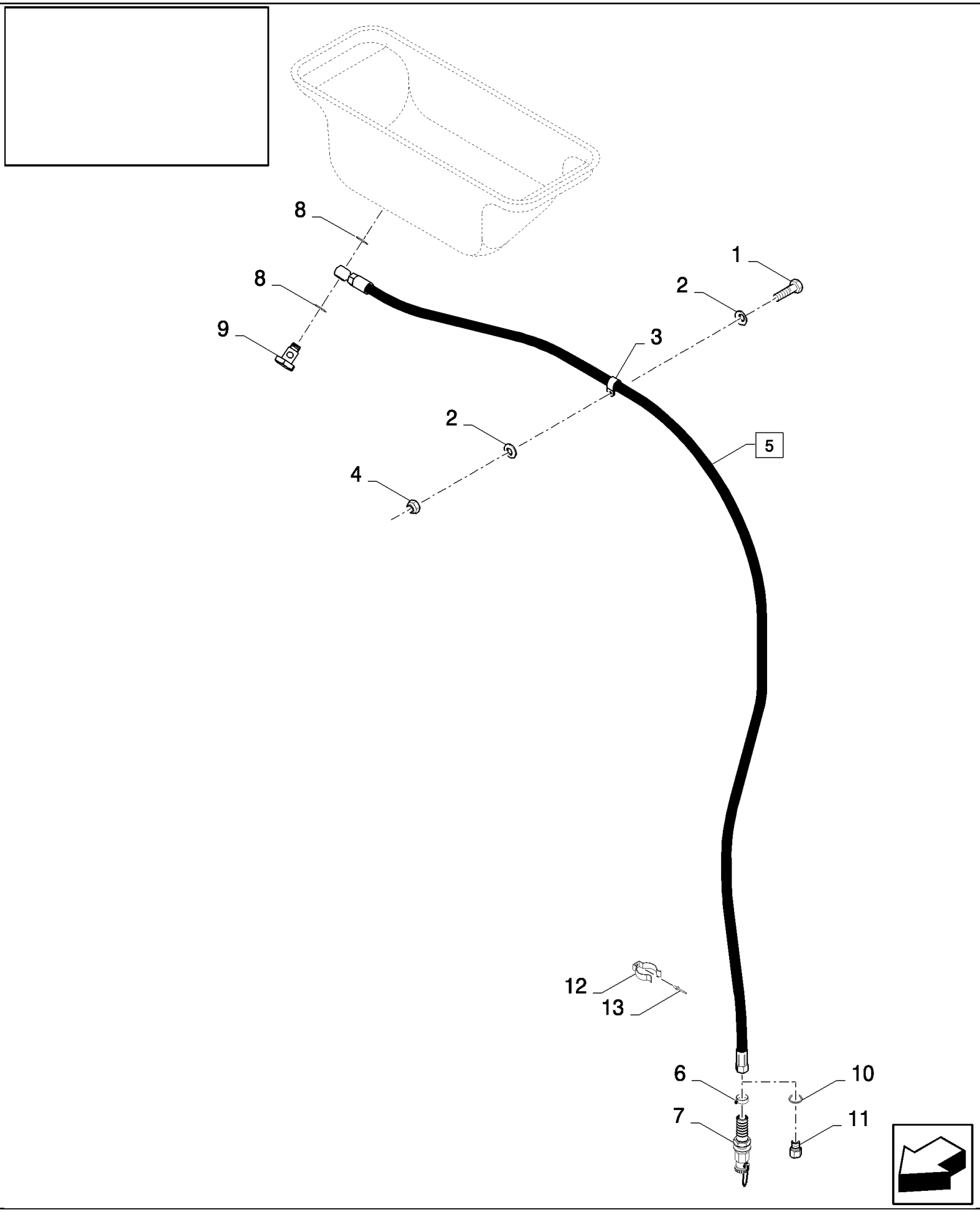

CX880 COMBINE - BASE UNIT (2/01-)

02.44(01) OIL EXHAUST

ссылка	Номер детали	Кол-во	Описание
1	120104	1	SCREW, Hex, M8 x 20, 8.8,
2	322358	2	WASHER, SPRING, Belleville, M8,
3	418407	1	CLAMP,
4	89706690	1	NUT, M8, Cl 8,
5	84431144	1	HOSE, (6to9), FOR CX860, CX880 ONLY, BSN C257
5	84440909	1	HOSE, HYDRAULIC, (6,7,10,11), FOR CX860, CX880 ONLY, ASN D258
5	84435764	1	HOSE, (6to9), FOR CX720, CX740, CX760, CX780, CX820, CX840 ONLY, BSN C257
5	84440870	1	HOSE, HYDRAULIC, (6to9), FOR CX720, CX740, CX760, CX780, CX820, CX840 ONLY, ASN D258
6	458683	1	CLAMP,
7	86583739	1	DRAINCOCK/TAP, SUPPLY,
8	220022	2	SEALRING, , FOR CX860, CX880 ONLY
8	220022	2	SEALRING, , FOR CX720, CX740, CX760, CX780, CX820, CX840 ONLY, BSN C257
8	220122	2	SEAL, , FOR CX720, CX740, CX760, CX780, CX820, CX840 ONLY, ASN D258
9	412156	1	SCREW, HOLLOW, , FOR CX860, CX880 ONLY
9	374955	1	SCREW, HOLLOW, , FOR CX720, CX740, CX760, CX780, CX820, CX840 ONLY
10	9511034	1	GASKET,
11	150060	1	PLUG,
12	9511662	3	CLAMP,
13	304972	3	RIVET,

02.45(01) AIR CONDITIONER UNIT : MOUNTING GROUP

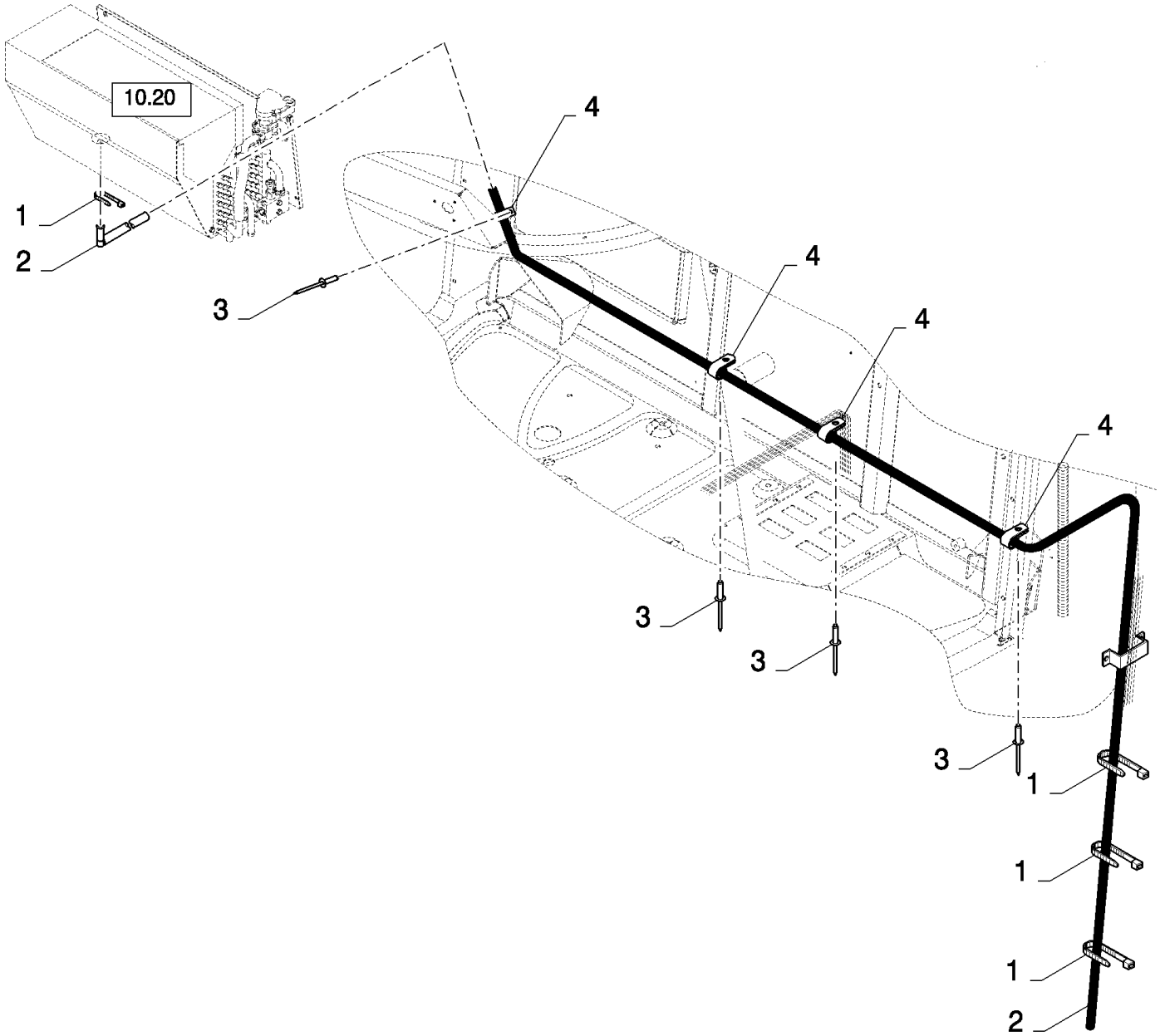

CX880 COMBINE - BASE UNIT (2/01-)

02.45(01) AIR CONDITIONER UNIT : MOUNTING GROUP

ссылка	Номер детали	Кол-во	Описание
1	86566989	4	STRAP, CABLE,
2	84067978	1	HOSE,
3	NSS	4	NOT SERVICED SEPARATELY,
4	418407	4	CLAMP,

02.46(01) AIR CONDITIONER UNIT : MOUNTING GROUP

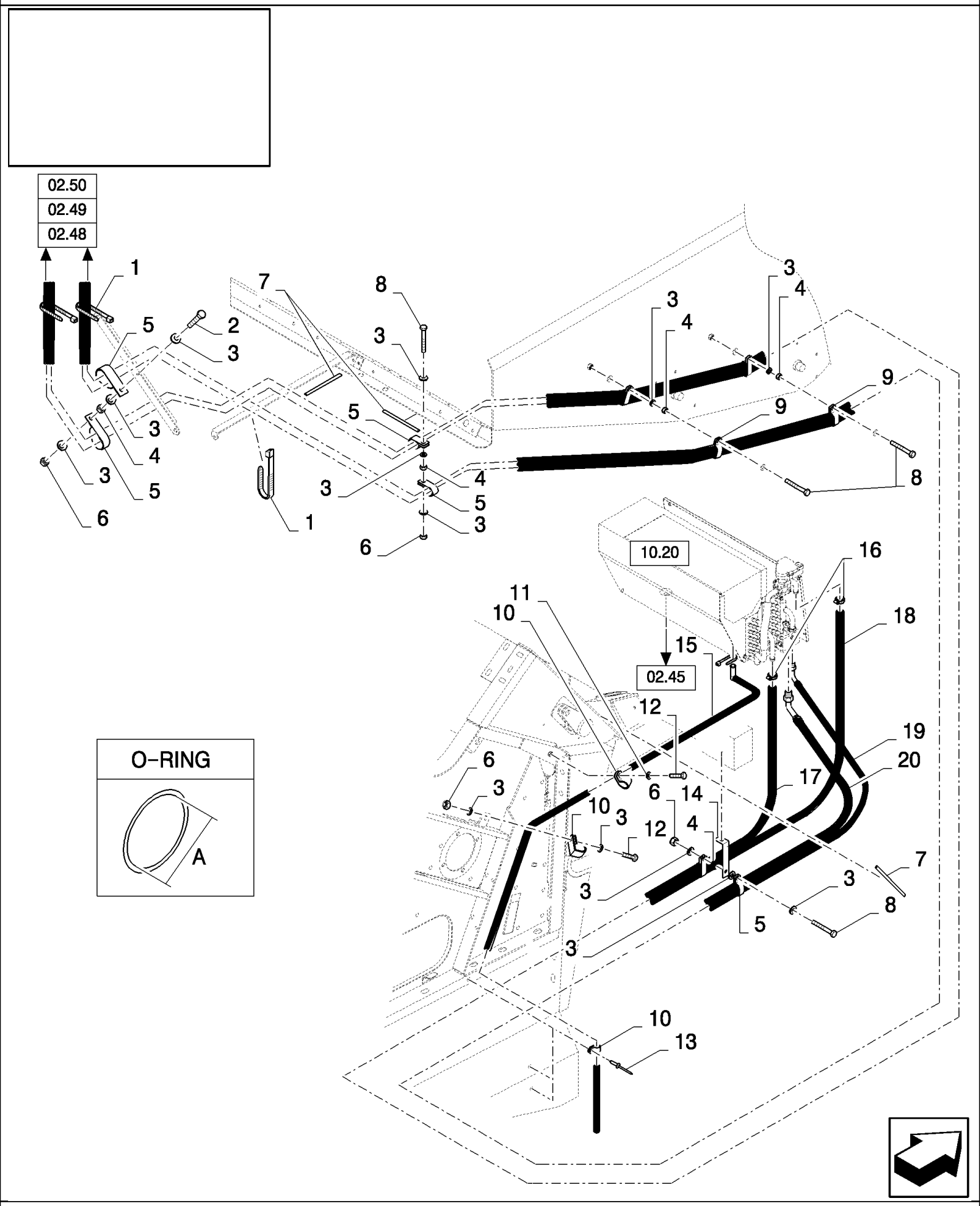

CX880 COMBINE - BASE UNIT (2/01-)

02.46(01) AIR CONDITIONER UNIT : MOUNTING GROUP

ссылка	Номер детали	Кол-во	Описание
1	86566989	AR	STRAP, CABLE,
2	43129	1	BOLT, Hex, M8 x 40, 8.8,
3	378243	AR	WASHER, M8,
4	89706690	AR	NUT, M8, Cl 8,
5	9513271	6	CLAMP,
6	86629542	6	NUT, LOCK, M8 x 1.25, Cl 8,
7	80401223	AR	PROFILE, , BSN C301
7	291186	AR	PROTECTION, , ASN D302
8	43130	4	BOLT, Hex, M8 x 50, 8.8,
9	9513271	4	CLAMP,
10	418407	7	CLAMP,
11	322358	1	WASHER, SPRING, Belleville, M8,
12	120104	4	SCREW, Hex, M8 x 20, 8.8,
13	NSS	3	NOT SERVICED SEPARATELY,
14	84431320	1	SUPPORT,
15	84067979	1	HOSE, HYDRAULIC,
16	326082	2	CLAMP,
17	84607280	1	HOSE,
18	84607279	1	HOSE,
19	84440218	1	HOSE, FLEXIBLE, DRYER-UNIT, BSN C281
19	84443695	1	HOSE, FLEXIBLE, DRYER-UNIT, ASN D282
20	84439931	1	HOSE, FLEXIBLE, UNIT-COMPRESSOR, FOR CX720, CX740, CX760, CX780, CX820, CX840 ONLY, BSN C281
20	84443696	1	HOSE, FLEXIBLE, UNIT-COMPRESSOR, FOR CX720, CX740, CX760, CX780, CX820, CX840 ONLY, ASN D282
20	84807595	1	HOSE, FLEXIBLE, UNIT-COMPRESSOR, FOR CX860 ONLY, BSN C281
20	84443700	1	HOSE, FLEXIBLE, UNIT-COMPRESSOR, FOR CX860 ONLY, BSN F282347
20	84448936	1	HOSE, FLEXIBLE, , FOR CX860 ONLY, ASN D348
20	84439934	1	HOSE, FLEXIBLE, UNIT-COMPRESSOR, FOR CX880 ONLY, BSN C281
20	84443701	1	HOSE, FLEXIBLE, UNIT-COMPRESSOR, FOR CX880 ONLY, BSN F282347
20	84448938	1	HOSE, FLEXIBLE, , FOR CX880 ONLY, ASN D348
21	9827058	AR	O-RING, A=11MM
21	89827059	AR	O-RING, A=14MM

02.47(01) AIR CONDITIONER UNIT : CONDENSATOR

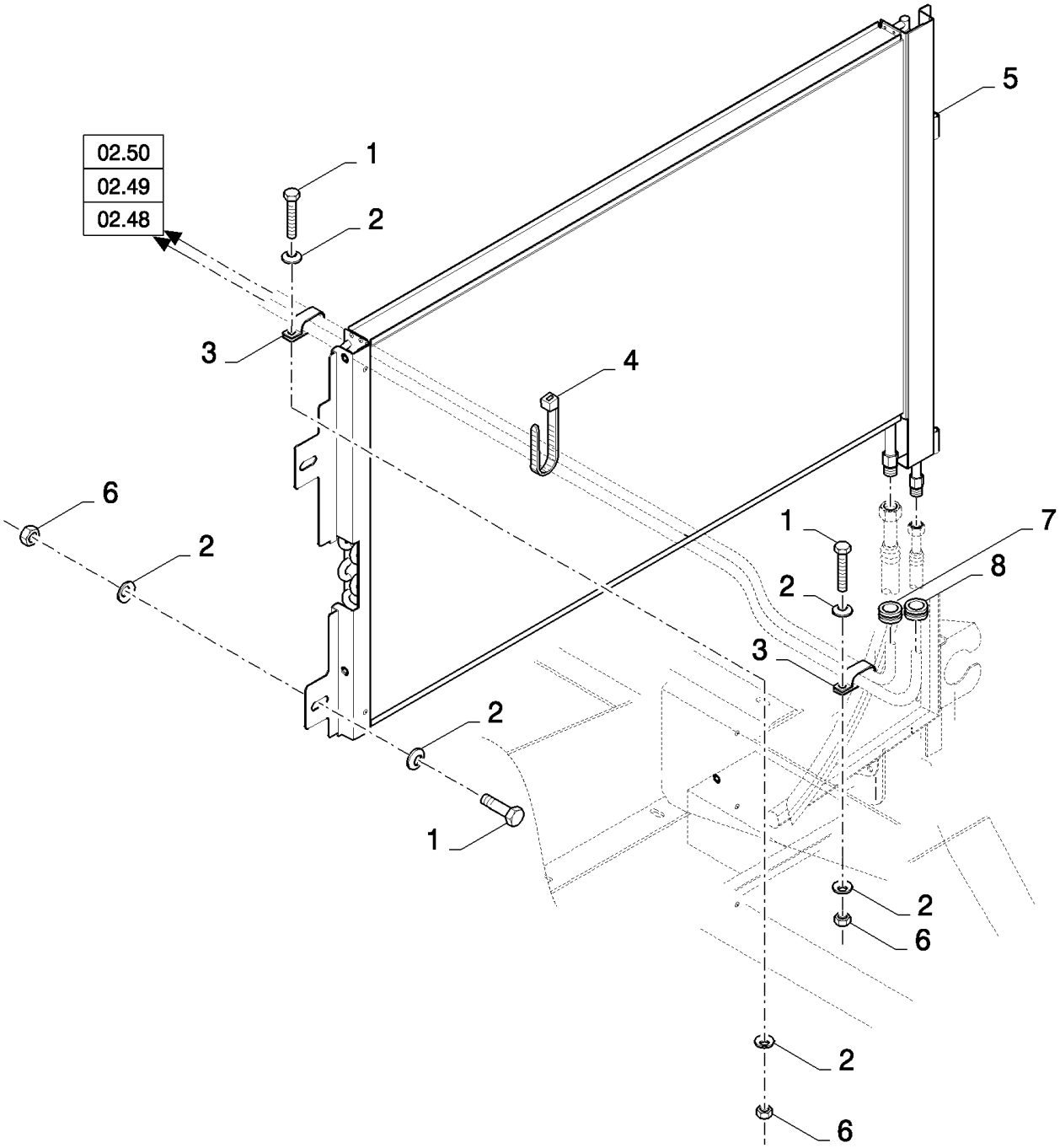

CX880 COMBINE - BASE UNIT (2/01-)

02.47(01) AIR CONDITIONER UNIT : CONDENSATOR

ссылка	Номер детали	Кол-во	Описание
1	43128	4	BOLT, Hex, M8 x 30, 8.8,
2	322358	8	WASHER, SPRING, Belleville, M8,
3	9513271	2	CLAMP,
4	86566989	1	STRAP, CABLE,
5	84439890	1	CONDENSER, , BSN C431
5	87317242	1	CONDENSER, , ASN D432
6	89706690	1	NUT, M8, Cl 8,
7	84011186	1	GROMMET, , BSN C301
7	331242	1	GROMMET, , ASN D302
8	102043	1	GROMMET,

02.50(01) AIR CONDITIONER UNIT : COMPRESSOR, DRYER

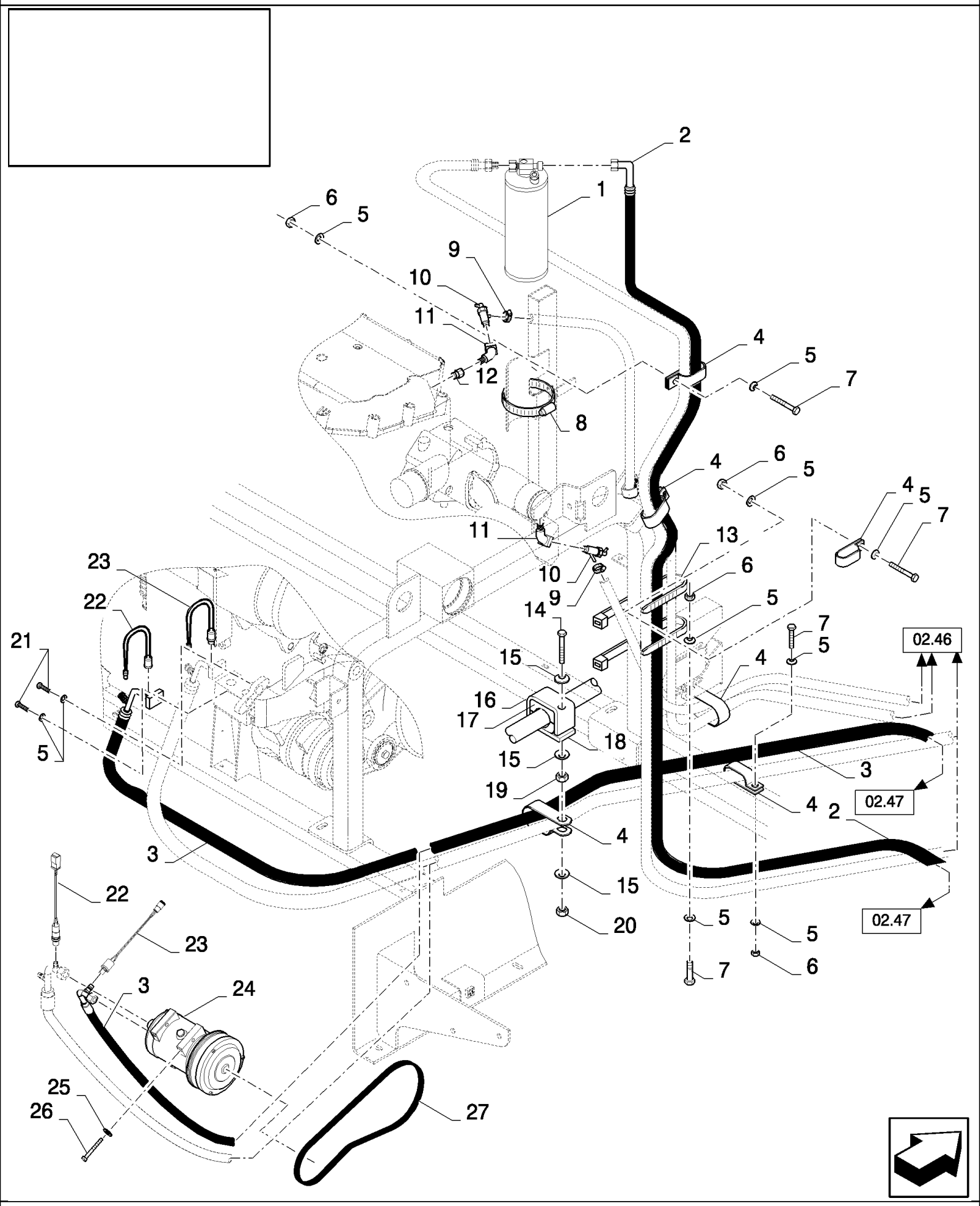

CX880 COMBINE - BASE UNIT (2/01-)

02.50(01) AIR CONDITIONER UNIT : COMPRESSOR, DRYER

ссылка	Номер детали	Кол-во	Описание
1	84058791	1	RECEIVER-DRYER,
1	84078487	1	RECEIVER-DRYER, , FOR SWEDEN ONLY
2	84440215	1	HOSE, FLEXIBLE, CONDITIONER-DRYER, BSN C281
2	84443693	1	HOSE, FLEXIBLE, CONDITIONER-DRYER, ASN D282
3	84440213	1	HOSE, FLEXIBLE, COMPRESSOR-CONDITIONER, BSN C281
3	84443692	1	HOSE, FLEXIBLE, COMPRESSOR-CONDITIONER, BSN F282347
3	84448939	1	HOSE, FLEXIBLE, , ASN D348
4	9513271	5	CLAMP,
5	322358	AR	WASHER, SPRING, Belleville, M8,
6	89706690	AR	NUT, M8, Cl 8,
7	43128	AR	BOLT, Hex, M8 x 30, 8.8,
8	556701	1	CLAMP,
9	326082	2	CLAMP,
10	83961305	2	VALVE, SHUT-OFF,
11	353779S	2	ELBOW,
12	918688	1	CONNECTOR, HYD.,
13	86566989	2	STRAP, CABLE,
14	412499	1	BOLT, Hex, M6 x 100, 8.8, Full Thd, M6x100
15	86588450	3	WASHER, M6,
16	743318	1	SUPPORT,
17	457546	2	CLAMP,
18	417043	1	SUPPORT,
19	15896221	1	NUT, M6, Cl 10,
20	353308	1	NUT, M6 x 1, Cl 8,
21	86531614	2	SCREW, Hex Soc Hd, M8 x 35, 12.9, M8x35, BSN C347
22	84334495	1	SWITCH, A/C LOW PRESSURE, LOW PRESSURE, BSN C479
23	84334498	1	SWITCH, A/C HIGH PRESSURE, HIGH PRESSURE, BSN C515
23	87366051	1	SWITCH, PRESSURE, , ASN D516
24	84448669	1	COMPRESSOR, AIRCOND., , ASN D348
25	322358	4	WASHER, SPRING, Belleville, M8, , ASN D348
26	395851	4	BOLT, Hex, M8 x 90, 8.8, Full Thd, M8x90, ASN D348
27	84818008	1	BELT, TRANSMISSION, , ASN D348

TRANSMISSION	**TRANSMISSION**	**TRANSMISION**	**TRANSMISSION**
TRANSMISSION	**TRANSMISSION**	**TRANSMISSÃO**	**TRANSMISSIE**

SEC. 3

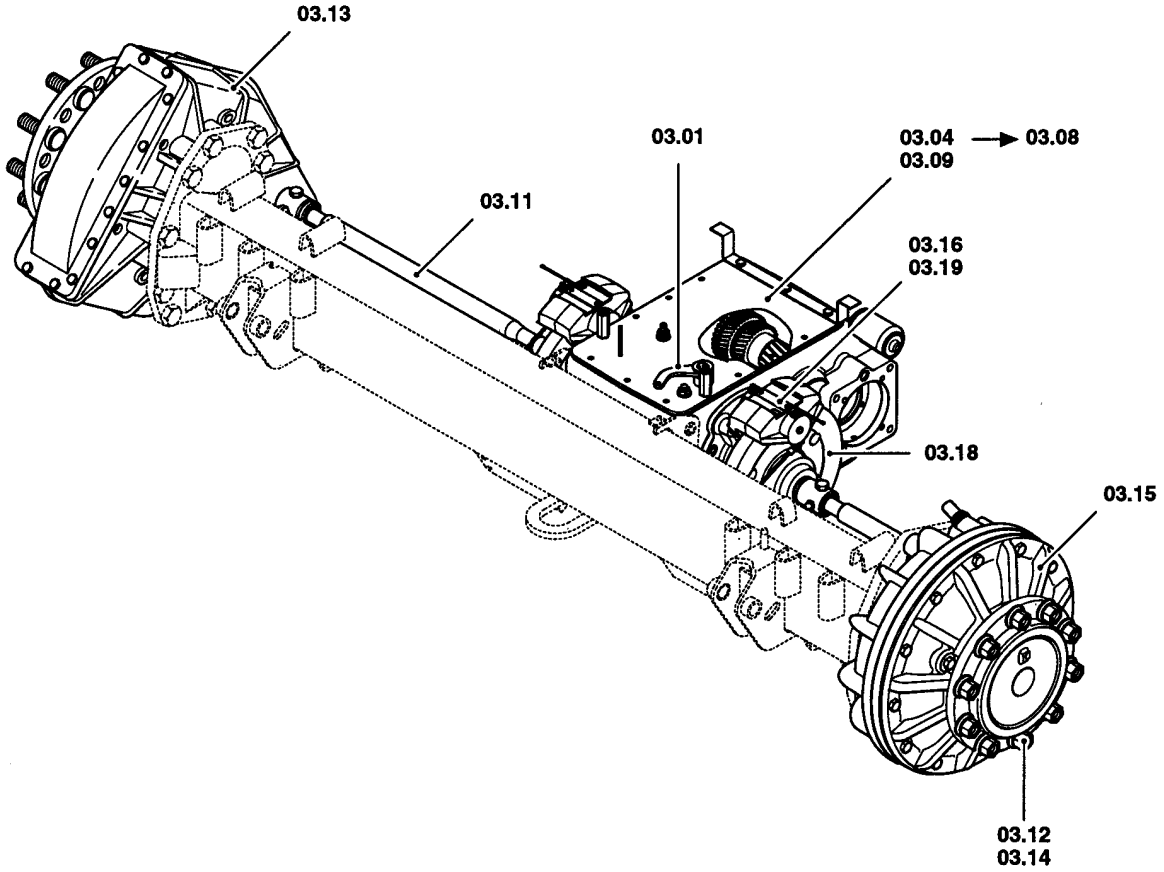

ссылка	Номер детали	Кол-во	Описание

03.01(01) DIFFERENTIAL LOCK CONTROL

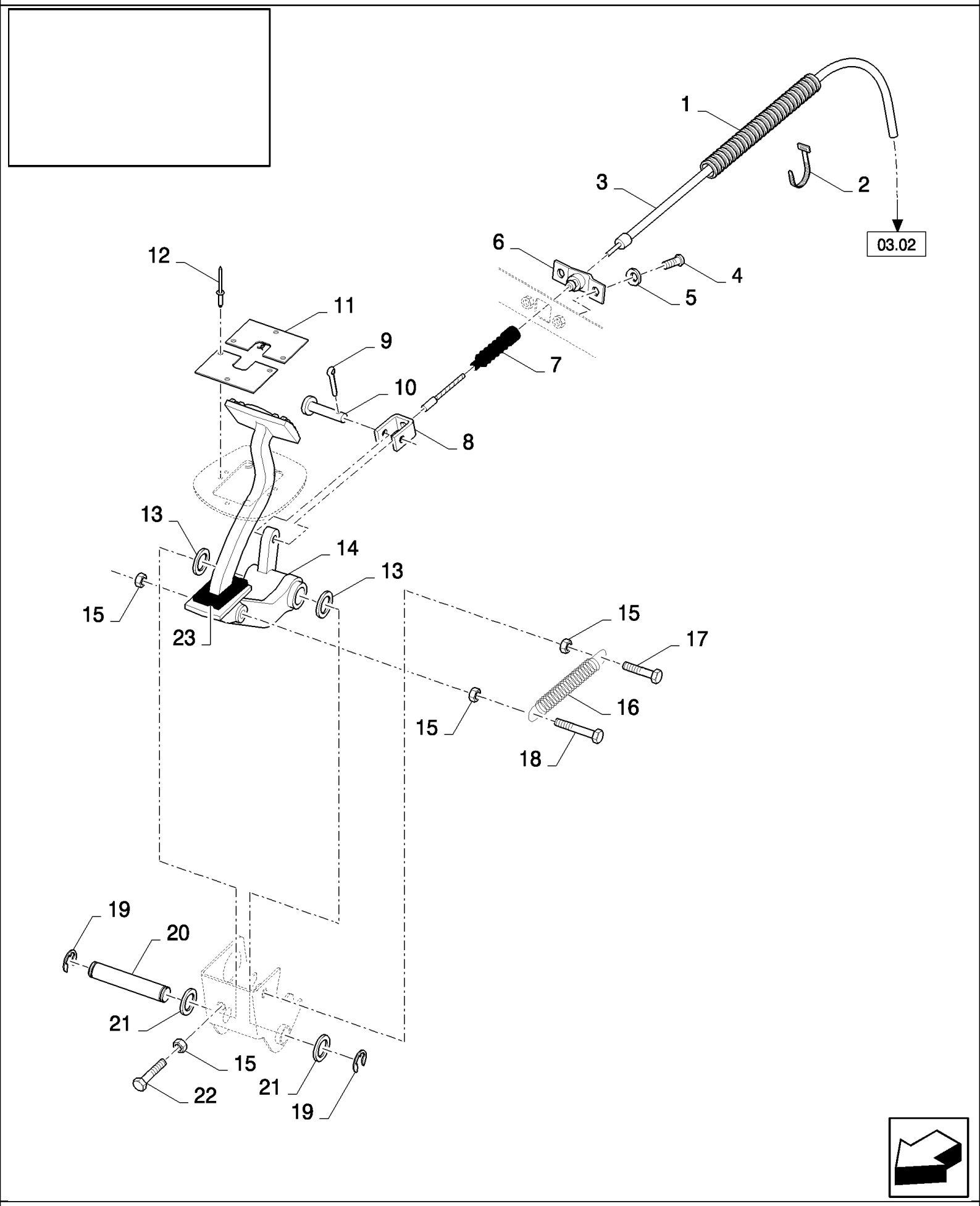

CX880 COMBINE - BASE UNIT (2/01-)

03.01(01) DIFFERENTIAL LOCK CONTROL

ссылка	Номер детали	Кол-во	Описание
1	NS	AR	NOT SERVICED, Protection
2	431352	1	CLAMP, , BSN C335
2	323597	1	STRAP, CABLE, M9 x 165 or M5 x 197, , ASN D336
3	9508257	1	CABLE,
4	86511830	2	SCREW, Cross Pan Hd, M6 x 20, , BSN C335
4	120100	2	BOLT, Hex, M6 x 20, 8.8, , ASN D336
5	322357	2	WASHER, SPRING, Belleville, M6,
6	84064224	1	BRACKET,
7	427705	1	COVER,
8	388340	1	YOKE,
9	300399	1	PIN, SPLIT (COTTER), , BSN C335
9	86977785	1	PIN, SPLIT (COTTER), M1.6 x 20, , ASN D336
10	376876	1	PIN, CLEVIS, M6 x 30,
11	84064130	2	PLATE,
12	NS	6	NOT SERVICED, Rivet
13	393062	2	WASHER,
14	84334950	1	PEDAL,
15	89706690	4	NUT, M8, Cl 8,
16	354039	1	SPRING,
17	43128	1	BOLT, Hex, M8 x 30, 8.8,
18	43130	1	BOLT, Hex, M8 x 50, 8.8, , BSN C335
18	87015731	1	SCREW, Hex, M8 x 50, 8.8, Full Thd, , ASN D336
19	84062118	2	CIRCLIP, M13,
20	84064170	1	PIN,
21	9513615	2	WASHER,
22	43129	1	BOLT, Hex, M8 x 40, 8.8,
23	9819826	1	SEAL,

03.02(01) DIFFERENTIAL LOCK CONTROL

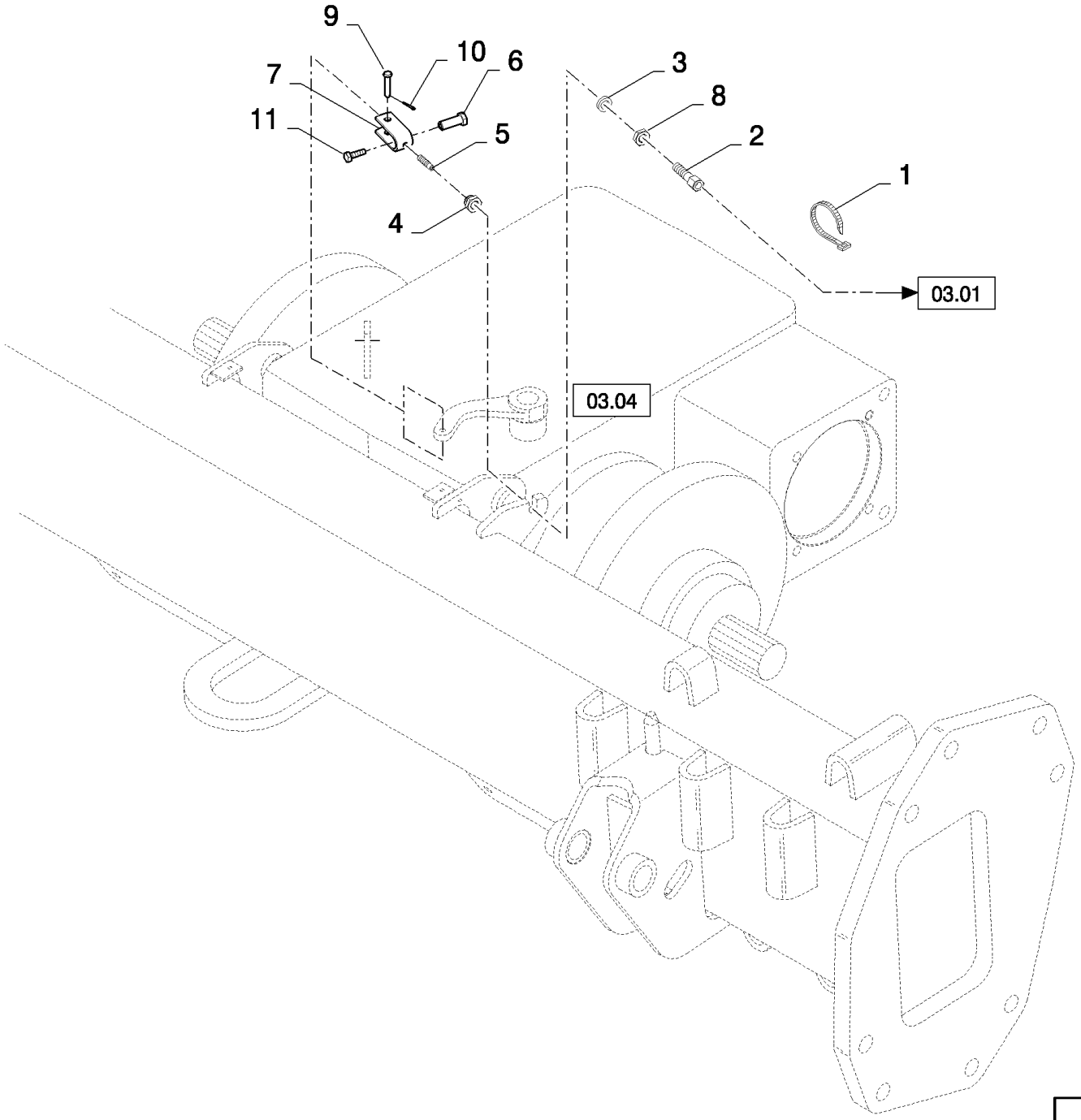

03.02(01) DIFFERENTIAL LOCK CONTROL

ссылка	Номер детали	Кол-во	Описание
1	9818147	3	CLAMP,
2	449469	1	SCREW,
3	394629	2	WASHER, LOCK,
4	449470	1	NUT,
5	9818291	1	BELLOWS,
6	381140	1	CLAMP,
7	388340	1	YOKE,
8	100016	1	NUT, M10, Cl 8,
9	376876	1	PIN, CLEVIS, M6 x 30,
10	86977785	1	PIN, SPLIT (COTTER), M1.6 x 20,
11	120100	1	BOLT, Hex, M6 x 20, 8.8,

03.03(01) COMPLETE TRACTION GEARBOX

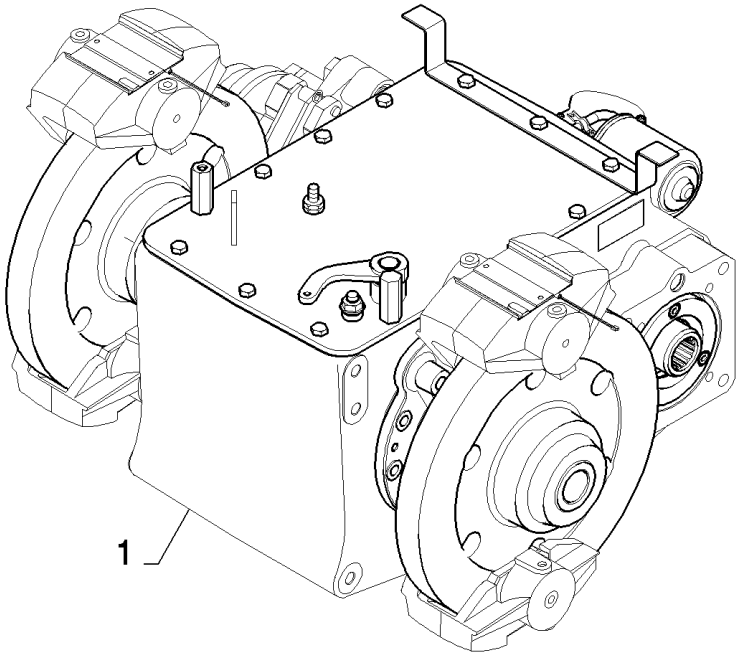

CX880 COMBINE - BASE UNIT (2/01-)

03.03(01) COMPLETE TRACTION GEARBOX

ссылка	Номер детали	Кол-во	Описание
1	84050619	1	TRANSMISSION, 20/61, WITH DIFF. LOCK, FOR CX860, CX880 ONLY
1	84050618	1	TRANSMISSION, 20/61, FOR CX860, CX880 ONLY
1	84050376	1	TRANSMISSION, 18/71, WITH DIFF. LOCK, FOR CX720, CX740, CX760 ONLY
1	84050375	1	TRANSMISSION, 18/71, FOR CX720, CX740, CX760 ONLY
1	84070137	1	TRANSMISSION, 16/71, FOR CX780, CX820, CX840 ONLY, WITH DIFF. LOCK
1	84060999	1	TRANSMISSION, 16/71, FOR CX780, CX820, CX840 ONLY

03.04(01) GEARBOX

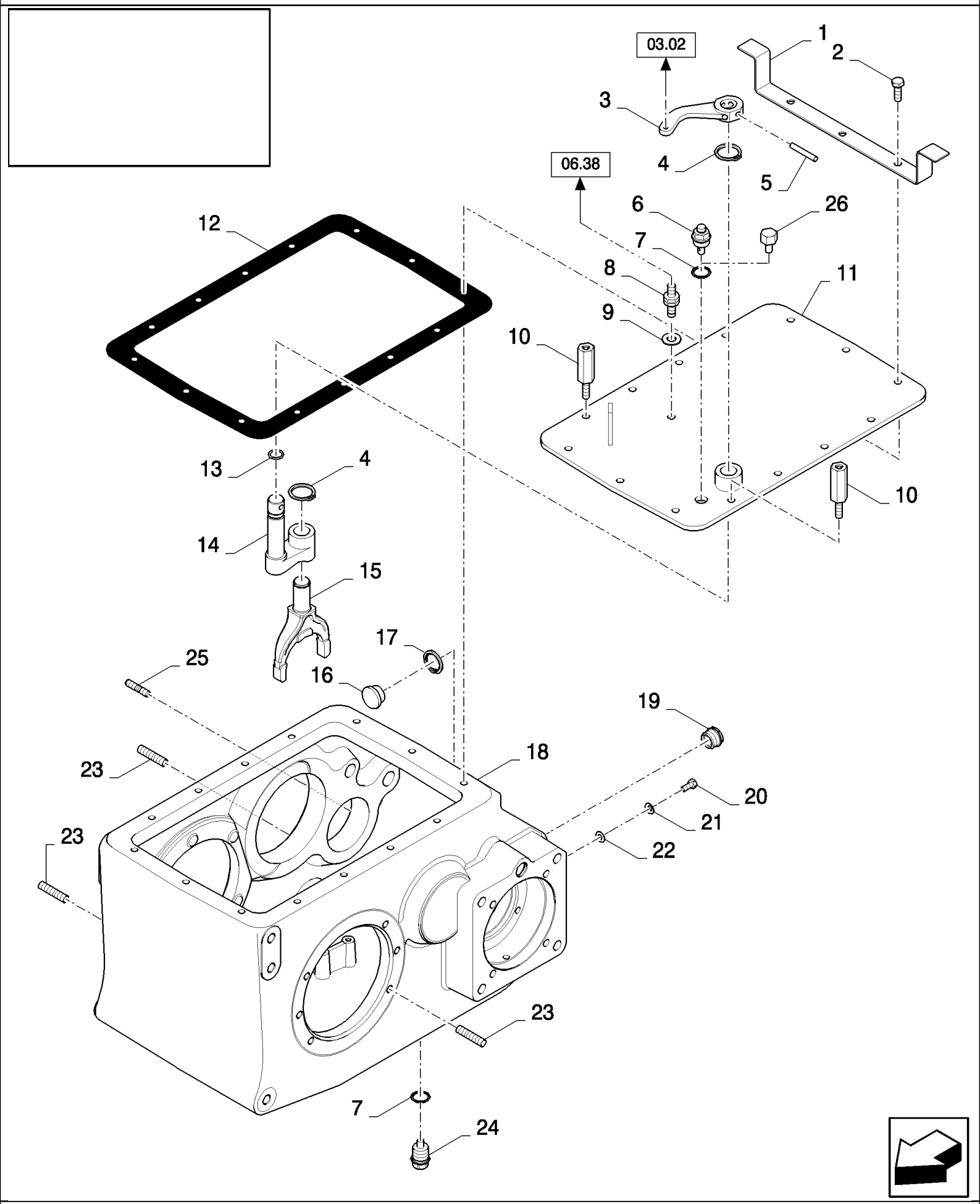

CX880 COMBINE - BASE UNIT (2/01-)

03.04(01) GEARBOX

ссылка	Номер детали	Кол-во	Описание
1	84075330	1	BRACKET,
2	412621	12	BOLT, Hex Lock, M10 x 30, 8.8,
3	84334005	1	LEVER, , WITH DIFF. LOCK
4	370002	2	RING, SNAP, M25, Ext, , WITH DIFF. LOCK
5	9506888	1	PIN, , WITH DIFF. LOCK
6	398136	1	BREATHER,
7	220025	2	SEALRING,
8	84058860	1	SENSOR,
9	355607	1	SEALRING,
10	84075338	2	SCREW,
11	84072053	1	COVER, , WITH DIFF. LOCK
11	84072051	1	COVER, , STANDARD
12	84071961	1	GASKET,
13	89818942	1	O-RING, , WITH DIFF. LOCK
14	89818945	1	ARM, , WITH DIFF. LOCK
15	89818947	1	YOKE, , WITH DIFF. LOCK
16	84431471	2	PLUG, , BSN C237
17	84989575	2	WASHER, SEALING, , BSN C237
18	84071605	1	HOUSING, , BSN C237
18	84439588	1	HOUSING, , ASN D238
19	84071596	1	LEVEL GAUGE CONTROL,
21	322358	2	WASHER, SPRING, Belleville, M8, , BSN C237
22	9839259	2	WASHER, , BSN C237
23	350341	15	STUD,
24	336897	1	PLUG,
25	110019	5	STUD,
26	150006	1	PLUG,
20	16043224	2	BOLT, Hex, M8 x 16, 8.8, Full Thd, , BSN C237

03.05(01) GEARBOX, GEARSHIFT CONTROL

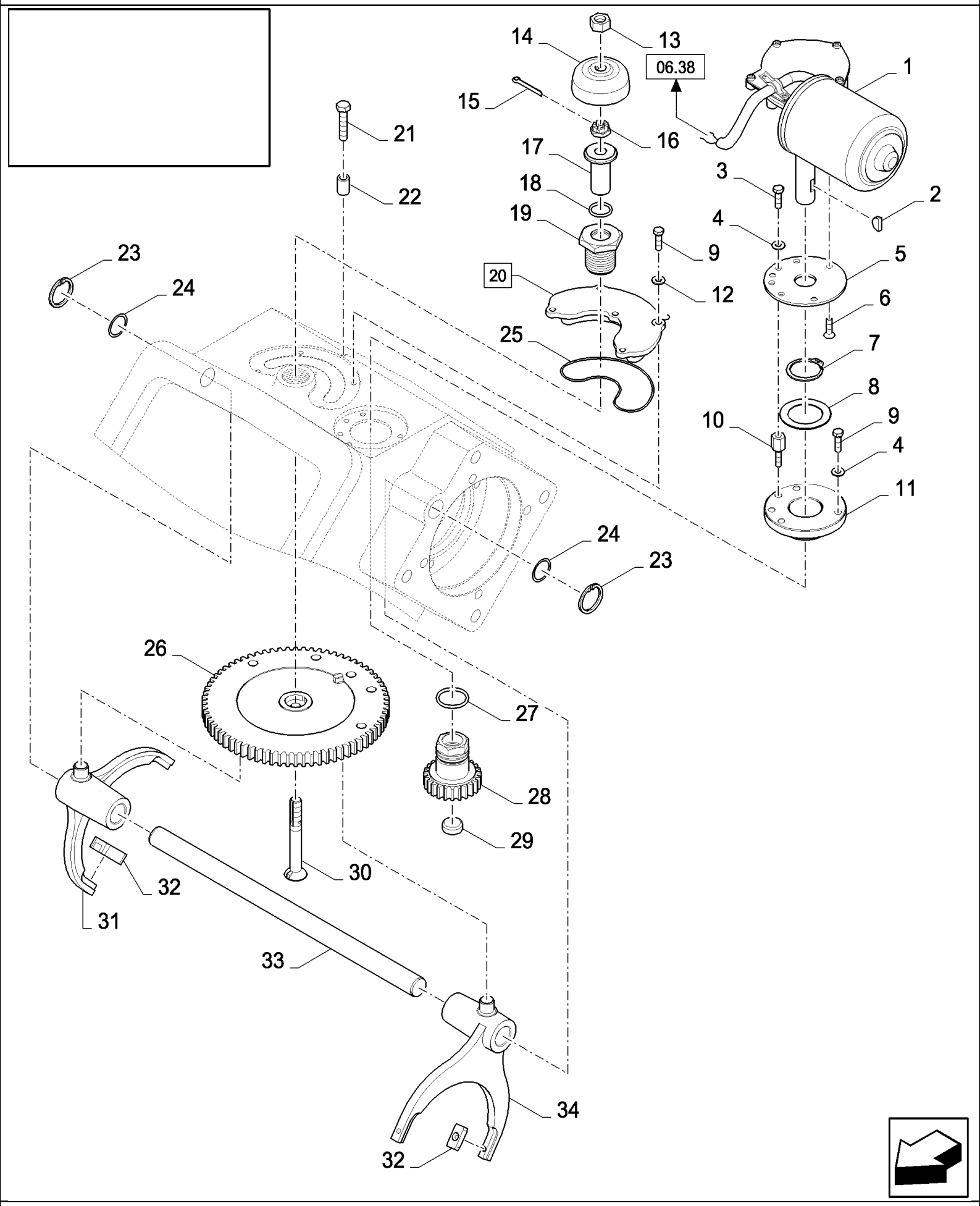

CX880 COMBINE - BASE UNIT (2/01-)

03.05(01) GEARBOX, GEARSHIFT CONTROL

ссылка	Номер детали	Кол-во	Описание
1	84807563	1	MOTOR, ELECTRIC,
2	84041731	1	KEY, WOODRUFF,
3	378056	4	BOLT, Hex, M6 x 10, 8.8, Full Thd,
4	322357	5	WASHER, SPRING, Belleville, M6,
5	84071166	1	DISC,
6	300497	3	SCREW, Hex Soc Flat Hd, M6 x 16, 8.8,
7	11068376	1	RING, SNAP, M35, Ext x 1.5 Thk,
8	442245	1	WASHER, FRICTION,
9	86508568	6	SCREW, Hex, M6 x 16, 8.8,
10	84071865	4	SCREW,
11	84071825	1	SPACER,
12	140015	5	WASHER, 6MM
13	9706685	1	NUT, M12, Cl 8,
14	84072087	1	LID,
15	130004	1	PIN, SPLIT (COTTER), M3.2 x 25,
16	84334523	1	NUT, SLOTTED, M14 x 1.5, Cl 8,
17	84334799	1	BUSHING,
18	304967	1	O-RING,
19	84071821	1	INSERT, THREADED,
20	84072805	1	SENSOR, (25), BSN C415
20	84457942	1	SENSOR, (25), ASN D416
21	120106	1	BOLT, Hex, M8 x 40, 8.8, Full Thd,
22	84038824	1	BUSHING,
23	84078050	2	RING, SNAP, M22, Int,
24	86629585	2	O-RING, -118, 70 Duro, .862" ID x .103" Thk,
25	84042797	1	O-RING,
26	84607593	1	GEAR,
27	84021955	1	O-RING,
28	84071856	1	GEAR,
29	396661	1	PLUG,
30	84334394	1	SCREW,
31	84071587	1	FORK, SHIFTER,
32	84432249	4	GUIDE,
33	84071538	1	SHAFT,
34	84071378	1	FORK, SHIFTER,

03.06(01) GEARBOX, INPUT SHAFT

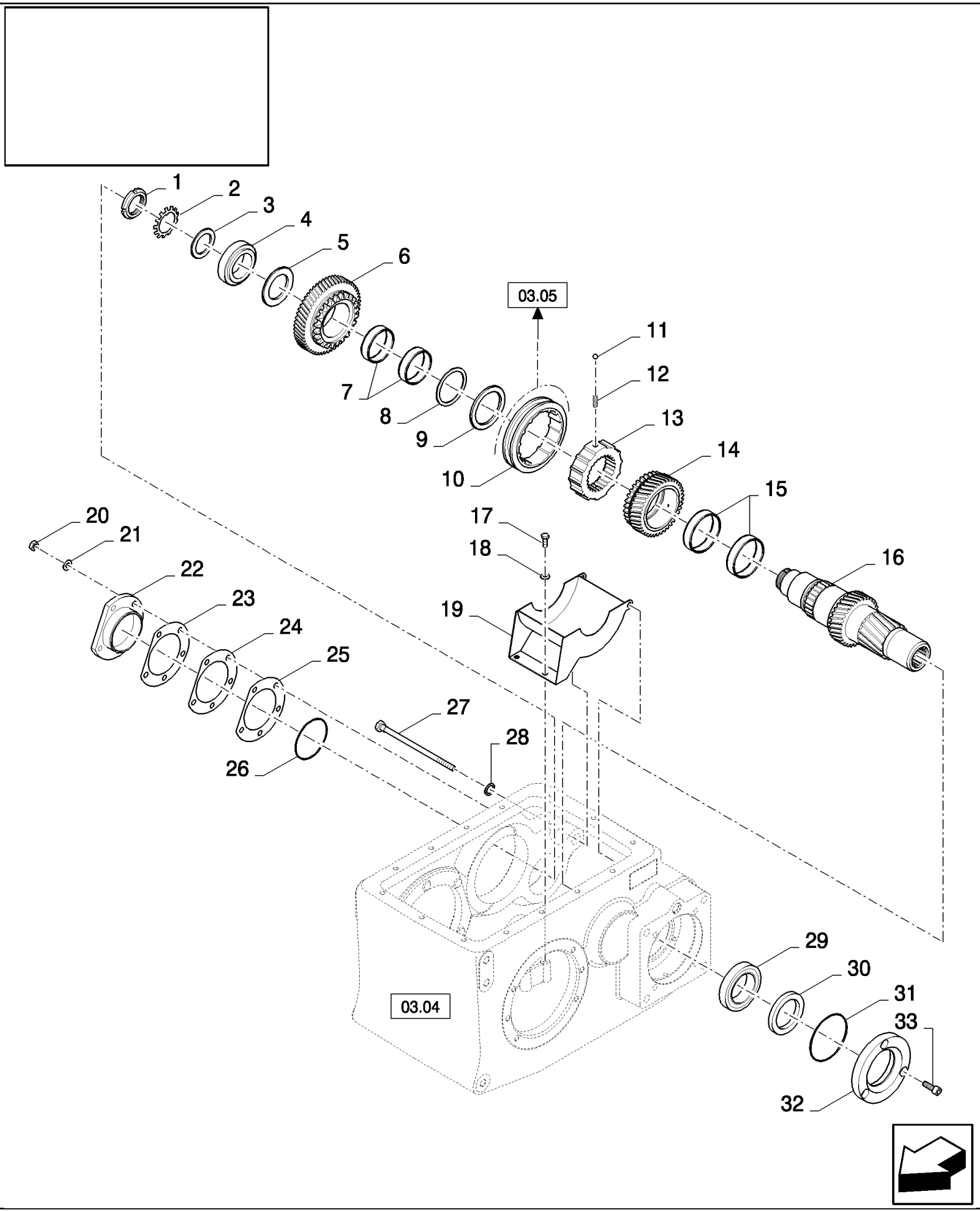

CX880 COMBINE - BASE UNIT (2/01-)

03.06(01) GEARBOX, INPUT SHAFT

ссылка	Номер детали	Кол-во	Описание
1	9615771	1	NUT, LOCK, M45 x 1.5, Bearing,
2	80410880	1	RING, LOCKING,
3	84071395	1	WASHER, THRUST,
4	853116	1	BEARING ASSY,
5	84071394	1	WASHER, THRUST,
6	84433273	1	GEAR,
6	84433273	1	GEAR, , FOR NA ONLY, BSN C347
6	84435944	1	GEAR, , FOR NA ONLY, ASN D348
7	84043299	1	BEARING, NEEDLE, Set of 2, BSN C435
7	87317816	1	BEARING SET, Set of 2, ASN D436
8	84078051	1	RING, SNAP, M72, Ext,
9	84072052	1	WASHER, THRUST,
10	84433358	1	GEAR,
11	84041521	2	BALL,
12	84041522	2	SPRING,
13	84433352	1	GEAR,
14	84433269	1	GEAR,
15	84071622	1	BEARING SET, Set of 2
16	84071392	1	SHAFT,
18	322358	2	WASHER, SPRING, Belleville, M8,
19	84435240	1	SHIELD,
20	100016	5	NUT, M10, Cl 8,
21	140045	5	WASHER, SPRING, Belleville, M10,
22	84071116	1	HOUSING, BEARING,
23	84072114	4	SHIM, Thk.: 0.05MM
24	84072113	2	SHIM, Thk.: 0.2MM
25	84072110	1	SHIM, Thk.: 0.5MM
26	84078053	1	O-RING,
27	84334964	1	SET SCREW, Hex Soc, M12 x 205,
28	84011379	1	SEALRING,
29	750347	1	BEARING, ROLLER,
30	84045429	1	SEALRING,
31	84032297	1	O-RING,
32	84071648	1	HOUSING, BEARING,
33	300442	3	SCREW, Hex Soc Hd, M10 x 30, 8.8,
17	16043224	2	BOLT, Hex, M8 x 16, 8.8, Full Thd,

03.07(01) GEARBOX, DRIVE SHAFT

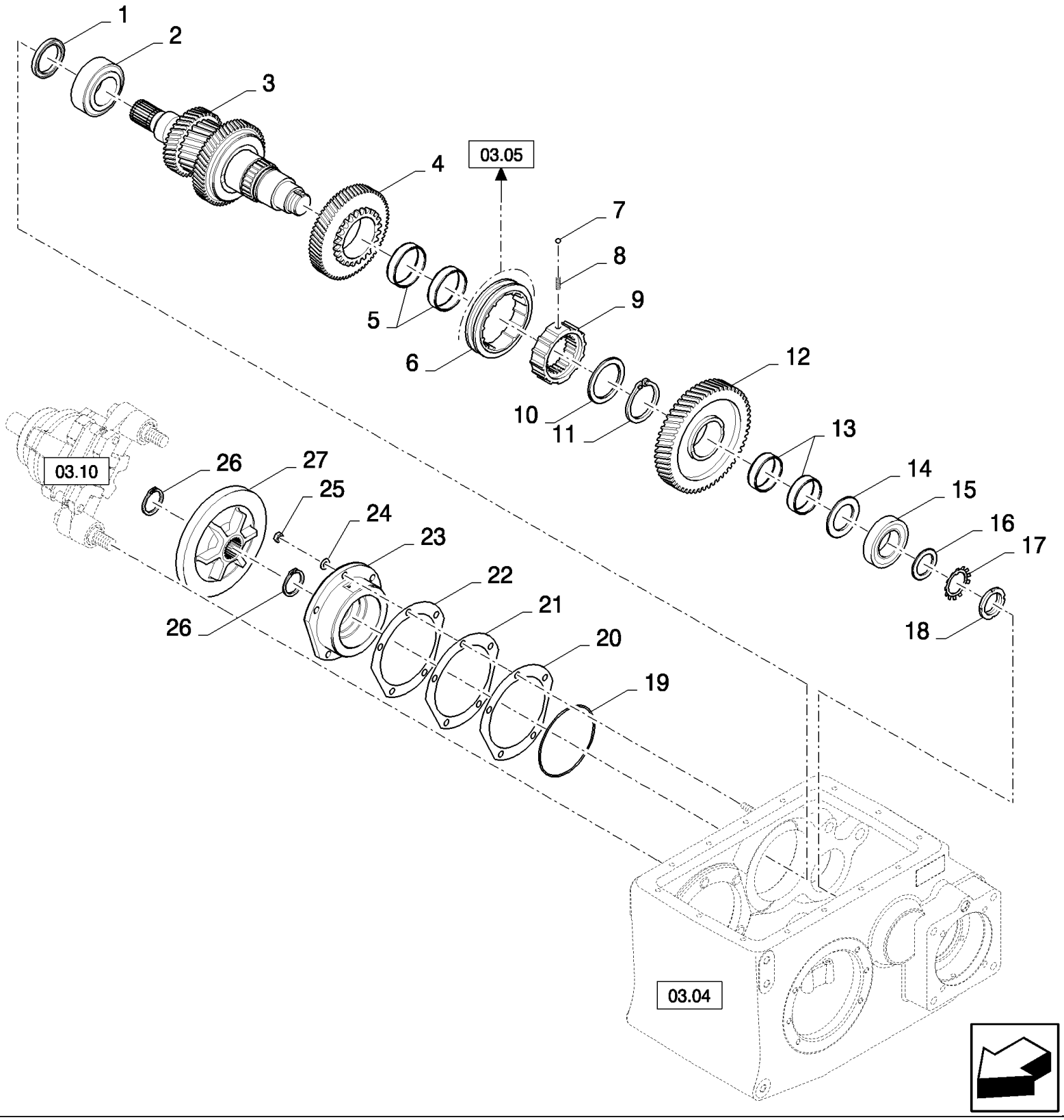

CX880 COMBINE - BASE UNIT (2/01-)

03.07(01) GEARBOX, DRIVE SHAFT

ссылка	Номер детали	Кол-во	Описание
1	84017986	1	SEALRING,
2	84074759	1	BEARING, ROLLER, TAPERED,
3	84072124	1	SHAFT, 20T, FOR CX860, CX880 ONLY
3	84072124	1	SHAFT, 20T, FOR CX860, CX880 ONLY, FOR NA ONLY, BSN C347
3	84433499	1	SHAFT, 20T, FOR NA ONLY, FOR CX860, CX880 ONLY, ASN D348
3	84072941	1	SHAFT, 16T, FOR CX780, CX820, CX840 ONLY
3	84072941	1	SHAFT, 16T, FOR NA ONLY, FOR CX840 ONLY, BSN C347
3	84433515	1	SHAFT, 16T, FOR CX840 ONLY, FOR NA ONLY, ASN D348
3	84072123	1	SHAFT, 18T, FOR CX720, CX740, CX760 ONLY
4	84433264	1	GEAR,
5	84071622	1	BEARING SET, Set of 2
6	84433358	1	GEAR,
7	84041521	2	BALL,
8	84041522	2	SPRING,
9	84433352	1	GEAR,
10	84072052	1	WASHER, THRUST,
11	84078051	1	RING, SNAP, M72, Ext,
12	84433278	1	GEAR, , BSN C395
12	84459182	1	GEAR, , ASN D396
13	84043299	1	BEARING, NEEDLE,
14	84071394	1	WASHER, THRUST,
15	84320593	1	BEARING, ROLLER, TAPERED,
16	84071395	1	WASHER, THRUST,
17	80410880	1	RING, LOCKING,
18	9615771	1	NUT, LOCK, M45 x 1.5, Bearing, M45
19	84078052	1	O-RING,
20	84072115	1	SHIM, Thk.: 0.5MM
21	84072116	2	SHIM, Thk.: 0.2MM
22	84072118	4	SHIM, Thk.: 0.05MM
23	84071119	1	HOUSING, BEARING,
24	140046	5	WASHER, Belleville, M12,
25	9706685	5	NUT, M12, Cl 8,
26	370007	2	RING, SNAP, M45, Ext,
27	84071123	1	BRAKE DISC,

03.08(01) GEARBOX, DRIVEN SHAFT

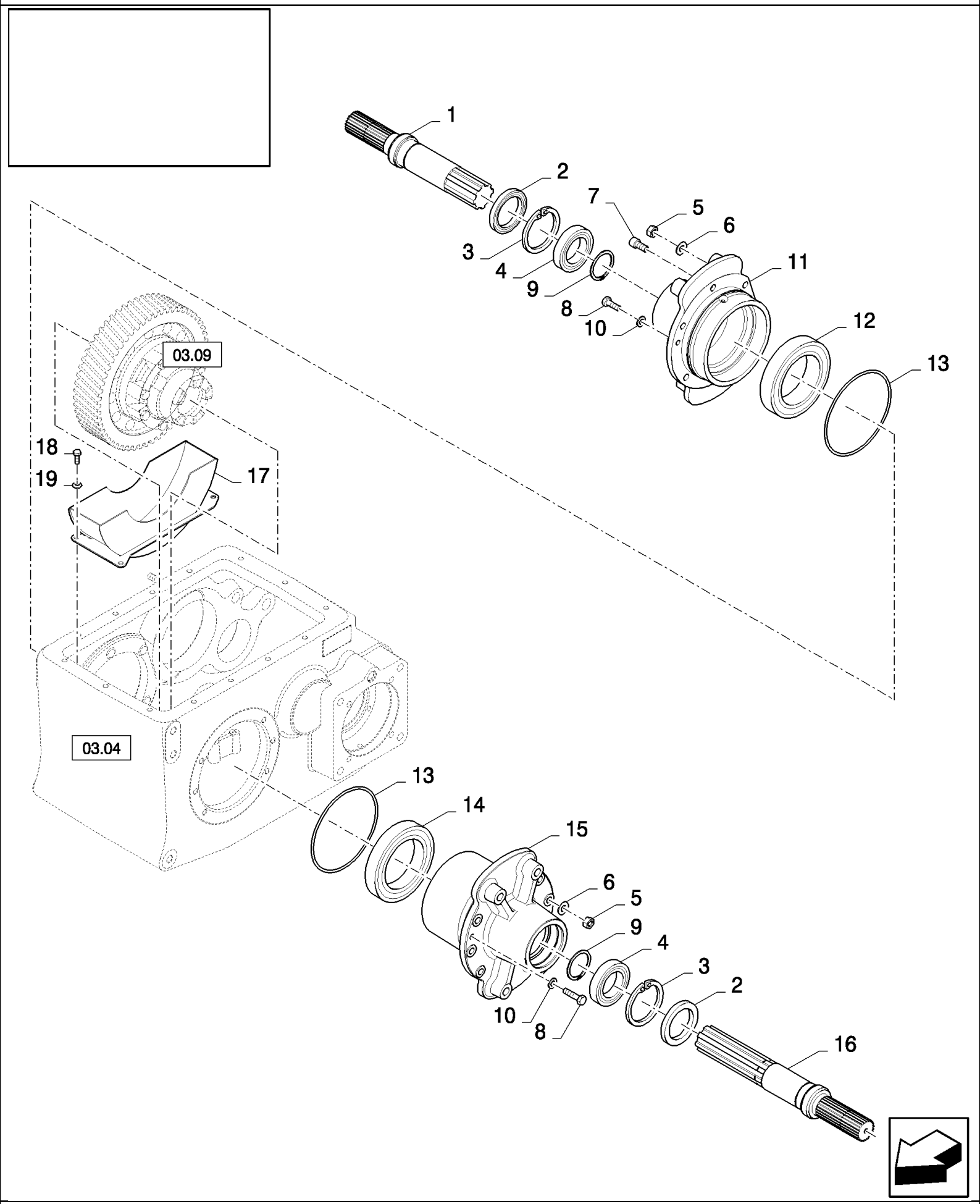

CX880 COMBINE - BASE UNIT (2/01-)

03.08(01) GEARBOX, DRIVEN SHAFT

ссылка	Номер детали	Кол-во	Описание
1	84069687	1	SHAFT,
2	84045429	2	SEALRING,
3	370013	2	RING, SNAP, M90, Int,
4	9825886	2	BEARING ASSY,
5	9706685	10	NUT, M12, Cl 8,
6	140046	10	WASHER, Belleville, M12,
7	9837786	2	SCREW, Hex Soc Hd, M12 x 20, 8.8, M12x20
8	86512298	4	BOLT, Hex, M10 x 12, 8.8, Full Thd,
9	327911	2	CIRCLIP,
10	140045	4	WASHER, SPRING, Belleville, M10,
11	84071156	1	FLANGE, , FOR CX860, CX880 ONLY
11	84071109	1	FLANGE, , FOR CX720, CX740, CX760, CX780, CX820, CX840 ONLY
12	210046	1	BEARING, BALL,
13	9815655	2	O-RING,
14	418831	1	BEARING ASSY,
15	84071210	1	FLANGE, , FOR CX860, CX880 ONLY
15	84071206	1	FLANGE, , FOR CX720, CX740, CX760, CX780, CX820, CX840 ONLY
16	84069688	1	SHAFT, , WITH DIFF. LOCK
16	84069822	1	SHAFT, , STANDARD
17	84435233	1	SHIELD, , FOR CX860, CX880 ONLY
17	84435237	1	SHIELD, , FOR CX720, CX740, CX760, CX780, CX820, CX840 ONLY
19	322358	4	WASHER, SPRING, Belleville, M8,
18	16043224	4	BOLT, Hex, M8 x 16, 8.8, Full Thd,

03.09(01) DIFFERENTIAL

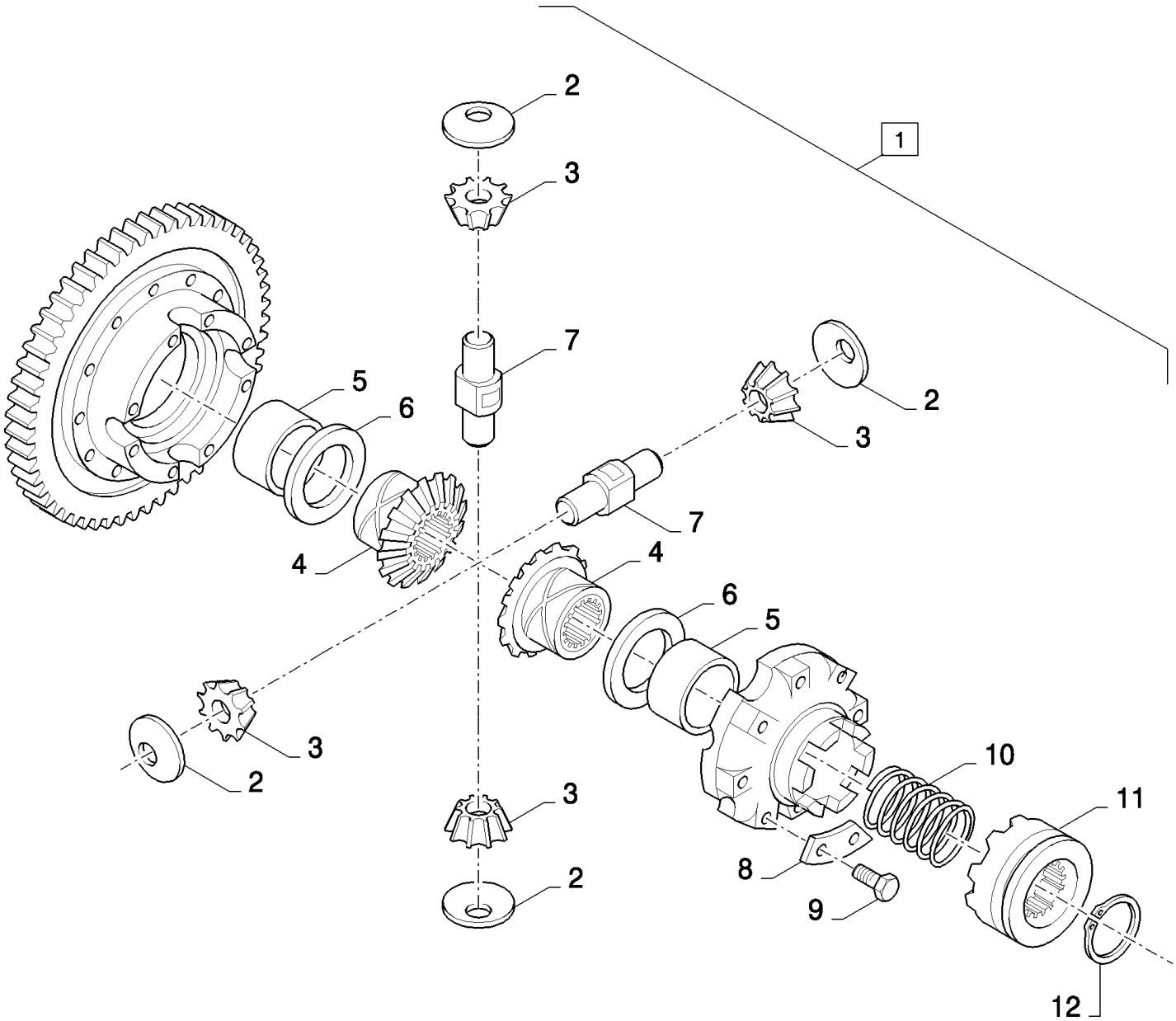

CX880 COMBINE - BASE UNIT (2/01-)

03.09(01) DIFFERENTIAL

ссылка	Номер детали	Кол-во	Описание
1	84071415	1	DIFFERENTIAL, (2 to 9), WITH DIFF. LOCK, RATIO 20/61
1	84071413	1	DIFFERENTIAL, (2 to 9), WITH DIFF. LOCK, RATIO 18/71
1	84071437	1	DIFFERENTIAL, (2 to 9), WITH DIFF. LOCK, RATIO 16/71
1	84071412	1	DIFFERENTIAL, (2 to 9), RATIO 20/61, STANDARD
1	84071409	1	DIFFERENTIAL, (2 to 9), STANDARD, RATIO 18/71
1	84071411	1	DIFFERENTIAL, (2 to 9), STANDARD, RATIO 16/71
2	210014	4	WASHER,
3	9850394	4	GEAR,
4	9514042	2	SPROCKET, DRIVEN,
5	9514039	2	SLEEVE,
6	210013	2	WASHER, THRUST,
7	9514041	2	SHAFT,
8	331649	4	PLATE, LOCKING,
9	120073	8	BOLT, Hex, M10 x 80, 8.8,
10	455097	1	SPRING, , WITH DIFF. LOCK
11	455094	1	RING, COUPLING, , WITH DIFF. LOCK
12	327911	1	CIRCLIP, , WITH DIFF. LOCK

03.10(01) GEARBOX : BRAKE

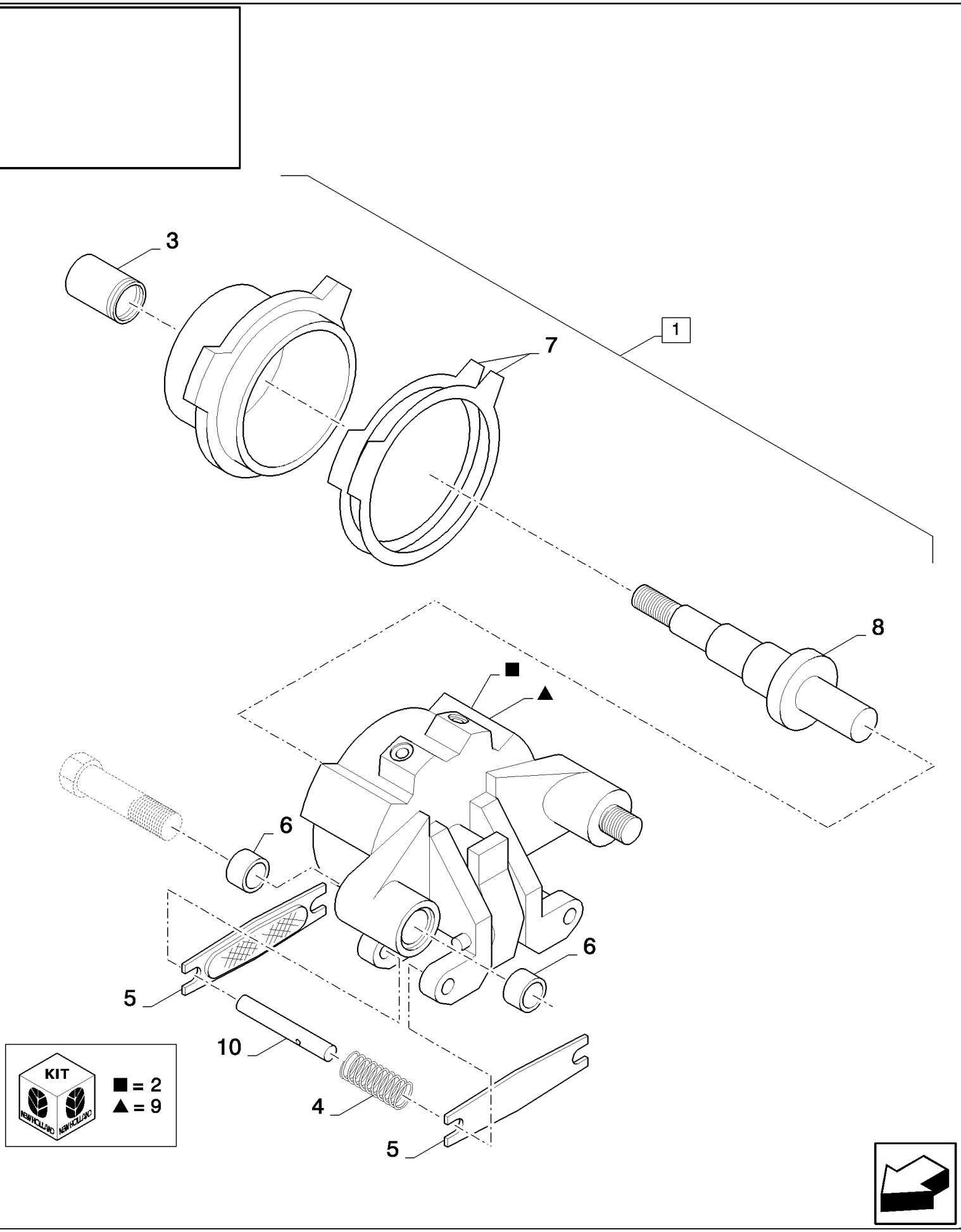

CX880 COMBINE - BASE UNIT (2/01-)

03.10(01) GEARBOX : BRAKE

ссылка	Номер детали	Кол-во	Описание
1	84433904	1	BRAKE CALIPER, (2 to 8), BSN C323
1	84818665	1	BRAKE, HAND, (2 to 9), ASN D324
2	84607357	1	KIT, SEALS, , BSN C323
2	84819189	1	KIT, SEALS, , ASN D324
3	84607351	1	CAP,
4	84607345	2	SPRING, , BSN C323
4	84447501	2	PIN, , ASN D324
5	84607353	2	BRAKE, PAD, , BSN C323
5	84817132	2	BRAKE, PAD, , ASN D324
6	84607354	4	SLEEVE,
7	84607355	15	SHIM,
8	84607356	1	PISTON, , BSN C323
8	84817131	1	PISTON, , ASN D324
9	84817135	1	COVER, , ASN D324
10	84818136	2	SHAFT,

03.11(01) DRIVE SHAFTS WTHOUT EXTENSIONS

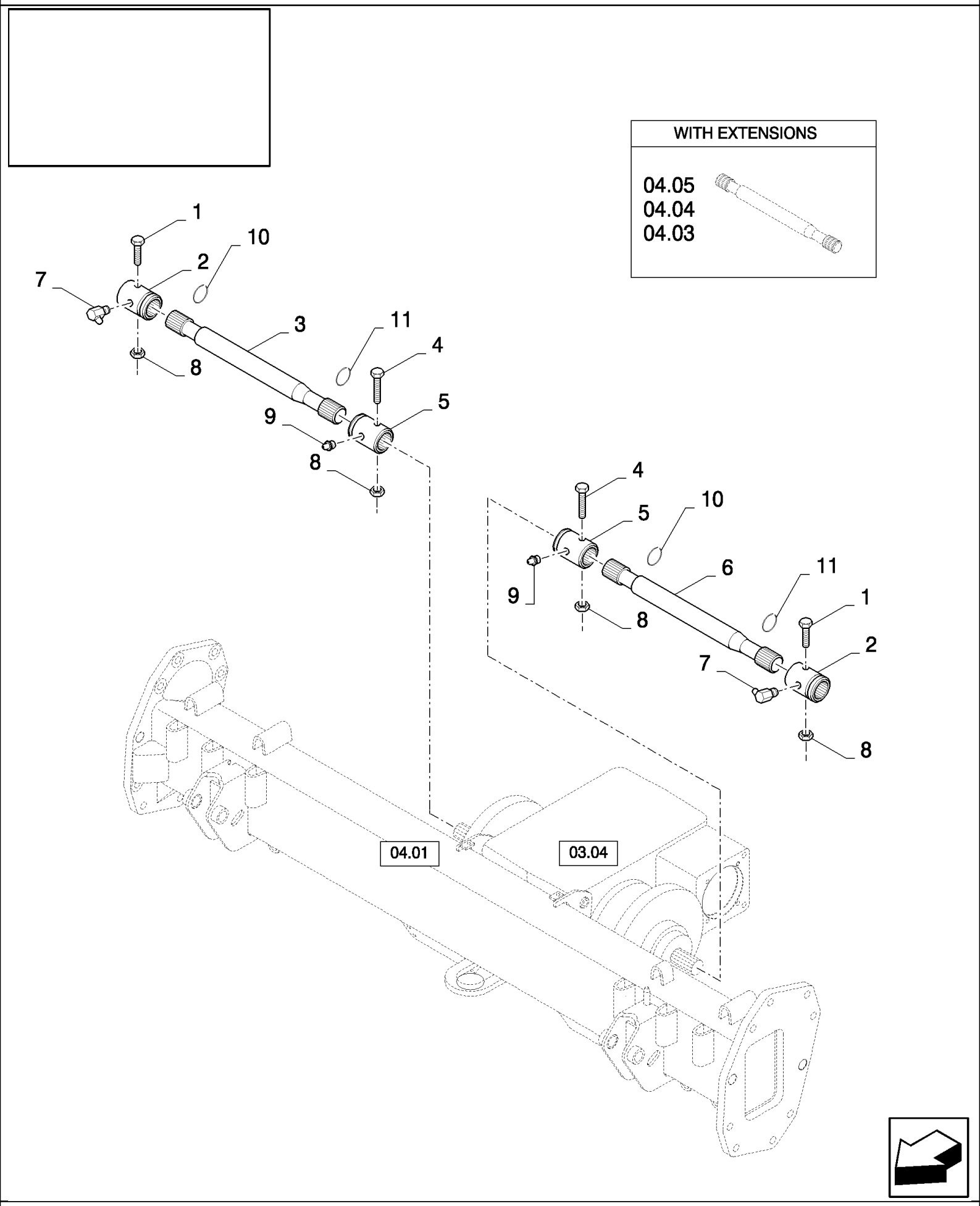

CX880 COMBINE - BASE UNIT (2/01-)

03.11(01) DRIVE SHAFTS WTHOUT EXTENSIONS

ссылка	Номер детали	Кол-во	Описание
1	43144	2	SCREW, Hex, M10 x 70, 8.8,
1	120073	2	BOLT, Hex, M10 x 80, 8.8,
2	84077843	2	BUSHING, SPLINED,
2	84077843	2	BUSHING, SPLINED, , FOR NA ONLY, FOR CX840 ONLY, NOT WITH EXTENSIONS, BSN C411
2	84439077	2	BUSHING, SPLINED, , NOT WITH EXTENSIONS, FOR CX840 ONLY, FOR NA ONLY, ASN D412
2	84077841	2	BUSHING, SPLINED, , FOR PLANETAIR FINAL DRIVES ONLY
2	84077841	2	BUSHING, SPLINED, , FOR NA ONLY, FOR CX860, CX880 ONLY, NOT WITH EXTENSIONS, BSN C347
2	84438982	2	COUPLING, SPLINED, , NOT WITH EXTENSIONS, FOR CX860, CX880 ONLY, FOR NA ONLY, ASN D348
2	84439077	2	BUSHING, SPLINED, , SOUTH AFRICA, FOR CX760 ONLY
3	84075221	1	SHAFT, CONTROL, RH, FOR CX720, CX740, CX760 ONLY, NOT WITH EXTENSIONS
3	84076611	1	SHAFT, CONTROL, RH, NOT WITH EXTENSIONS, FOR CX780 ONLY
3	84072598	1	SHAFT, CONTROL, RH, NOT WITH EXTENSIONS, FOR CX820, CX840 ONLY, BSN C415
3	84459346	1	SHAFT, CONTROL, RH, FOR CX820, CX840 ONLY, NOT WITH EXTENSIONS, ASN D416
3	84072581	1	SHAFT, CONTROL, RH, NOT WITH EXTENSIONS, FOR CX860, CX880 ONLY, BSN C415
3	84459333	1	SHAFT, CONTROL, RH, FOR CX860, CX880 ONLY, NOT WITH EXTENSIONS, ASN D416
3	84075365	1	SHAFT, CONTROL, RH, NOT WITH EXTENSIONS, FOR NA ONLY, FOR CX840 ONLY, BSN C411
3	84801021	1	SHAFT, RH, FOR CX840 ONLY, FOR NA ONLY, NOT WITH EXTENSIONS, ASN D412
3	84072580	1	SHAFT, CONTROL, RH, NOT WITH EXTENSIONS, FOR NA ONLY, FOR CX860, CX880 ONLY, BSN C347
3	84440165	1	SHAFT, DRIVE, RH, FOR CX860, CX880 ONLY, FOR NA ONLY, NOT WITH EXTENSIONS, ASN D348
3	84454802	1	SHAFT, RH, SOUTH AFRICA, FOR CX760 ONLY
4	120073	2	BOLT, Hex, M10 x 80, 8.8,
5	84077841	2	BUSHING, SPLINED,
5	84077841	2	BUSHING, SPLINED, , FOR NA ONLY, FOR CX840 ONLY, NOT WITH EXTENSIONS, BSN C411
5	84438982	2	COUPLING, SPLINED, , NOT WITH EXTENSIONS, FOR CX840 ONLY, FOR NA ONLY, ASN D412
5	84077841	2	BUSHING, SPLINED, , FOR NA ONLY, FOR CX860, CX880 ONLY, NOT WITH EXTENSIONS, BSN C347
5	84438982	2	COUPLING, SPLINED, , NOT WITH EXTENSIONS, FOR CX860, CX880 ONLY, FOR NA ONLY, ASN D348
5	84438982	2	COUPLING, SPLINED, , SOUTH AFRICA, FOR CX760 ONLY
6	84075221	1	SHAFT, CONTROL, LH, FOR CX720, CX740, CX760 ONLY, NOT WITH EXTENSIONS
6	84076611	1	SHAFT, CONTROL, LH, NOT WITH EXTENSIONS, FOR CX780 ONLY
6	84334434	1	SHAFT, CONTROL, LH, NOT WITH EXTENSIONS, FOR CX820, CX840 ONLY, BSN C415
6	84459176	1	SHAFT, CONTROL, LH, FOR CX820, CX840 ONLY, NOT WITH EXTENSIONS, ASN D416
6	84072589	1	SHAFT, CONTROL, LH, NOT WITH EXTENSIONS, FOR CX860, CX880 ONLY, BSN C415
6	84459334	1	SHAFT, CONTROL, LH, FOR CX860, CX880 ONLY, NOT WITH EXTENSIONS, ASN D416
6	84334443	1	SHAFT, CONTROL, LH, NOT WITH EXTENSIONS, FOR NA ONLY, FOR CX840 ONLY, BSN C411
6	84801020	1	SHAFT, LH, FOR CX840 ONLY, FOR NA ONLY, NOT WITH EXTENSIONS, ASN D412
6	84072583	1	SHAFT, CONTROL, LH, NOT WITH EXTENSIONS, FOR NA ONLY, FOR CX860, CX880 ONLY, BSN C347
6	84440162	1	SHAFT, DRIVE, , FOR CX860, CX880 ONLY, FOR NA ONLY, NOT WITH EXTENSIONS, ASN D348

03.11(01) DRIVE SHAFTS WTHOUT EXTENSIONS

ссылка	Номер детали	Кол-во	Описание
6	84454802	1	SHAFT, , SOUTH AFRICA, FOR CX760 ONLY
7	323713	2	NIPPLE, LUBE,
8	100037	4	NUT, M10 x 1.5, Cl 8,
9	321204	2	NIPPLE, LUBE, M6 x 1, 16mm lg,
10	84807658	2	CIRCLIP, , FOR NA ONLY, FOR CX860, CX880 ONLY, NOT WITH EXTENSIONS, ASN D348
10	84446910	2	CIRCLIP, , SOUTH AFRICA, FOR CX760 ONLY
10	84446910	2	CIRCLIP, , FOR NA ONLY, FOR CX840 ONLY, NOT WITH EXTENSIONS, ASN D412
11	84807658	2	CIRCLIP, , NOT WITH EXTENSIONS, FOR CX860, CX880 ONLY, FOR NA ONLY, ASN D348
11	84446911	2	CIRCLIP, , SOUTH AFRICA, FOR CX760 ONLY
11	84446911	2	CIRCLIP, , FOR NA ONLY, FOR CX840 ONLY, NOT WITH EXTENSIONS, ASN D412

03.14(01) END REDUCTION, PLANETARY

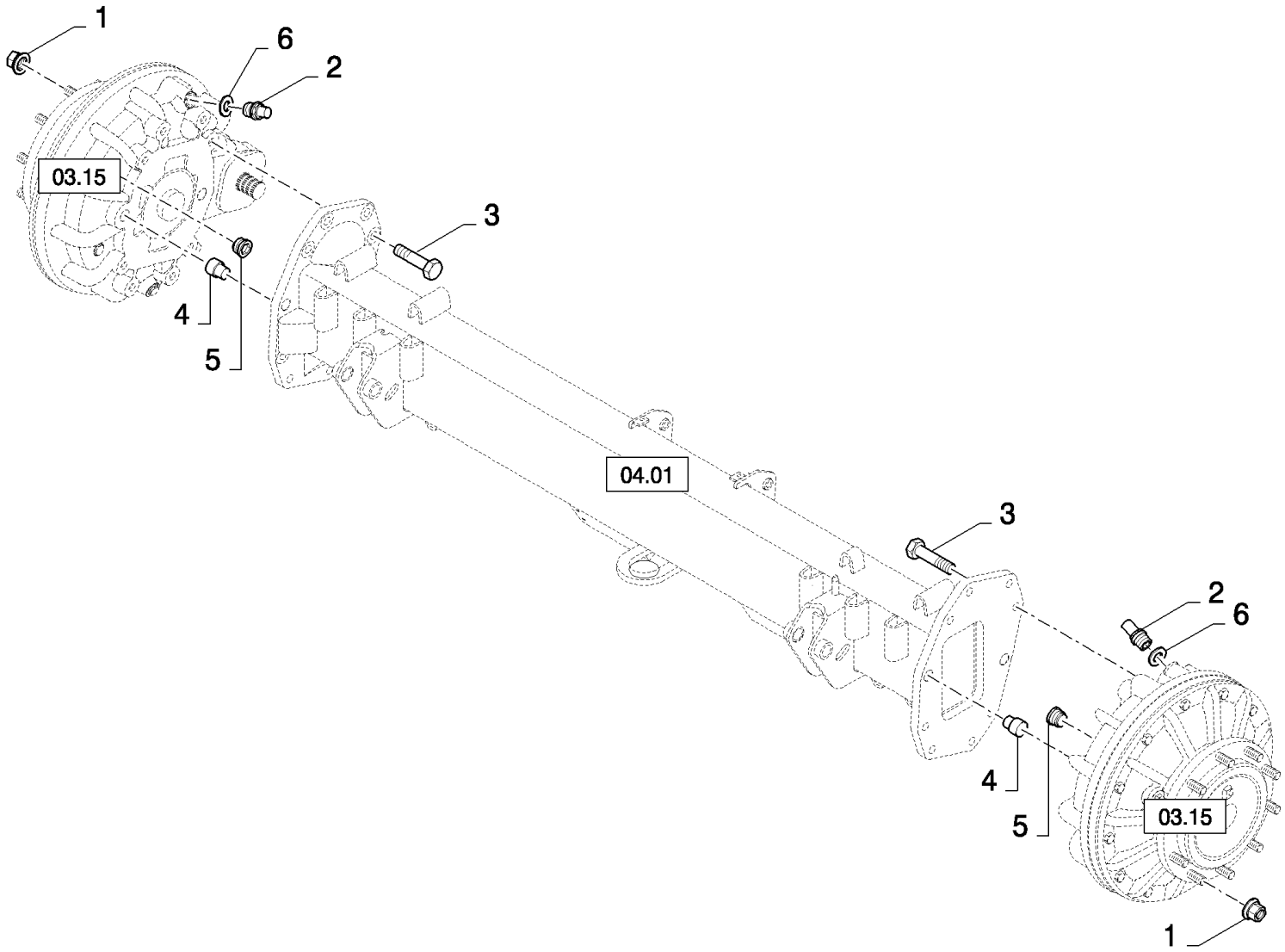

CX880 COMBINE - BASE UNIT (2/01-)

03.14(01) END REDUCTION, PLANETARY

ссылка	Номер детали	Кол-во	Описание
1	748961	20	NUT,
2	386287	2	BREATHER, , BSN C481
2	84068655	2	BREATHER, , ASN D482
3	9843495	16	SCREW, Hex, M20 x 60, 10.9,
3	9843590	16	BOLT, Hex, M20 x 50, 10.9,
4	626826	4	PIN,
5	84817215	2	PLUG,
6	220025	2	SEALRING, , BSN C481
6	84439102	2	WASHER, SEALING, , ASN D482

03.15(01) END REDUCTION, PLANETARY - C481

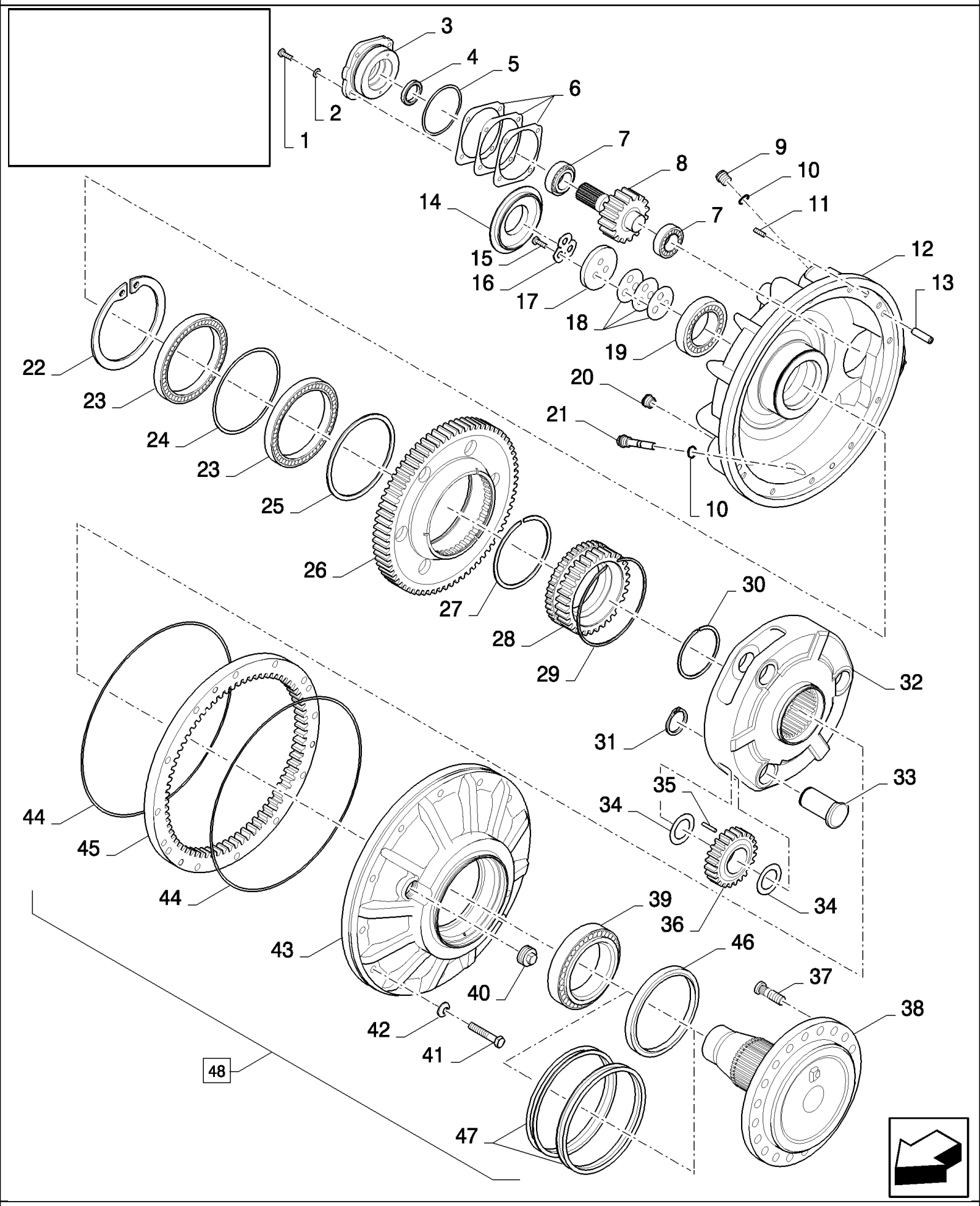

CX880 COMBINE - BASE UNIT (2/01-)

03.15(01) END REDUCTION, PLANETARY - C481

ссылка	Номер детали	Кол-во	Описание
1	43140	4	BOLT, Hex, M10 x 30, 8.8, Full Thd,
2	140045	4	WASHER, SPRING, Belleville, M10,
3	84074714	1	COVER,
4	84074392	1	WASHER,
5	84074393	1	O-RING,
6	84074713	AR	SHIM, THK.: 0.5MM
6	84074712	AR	SHIM, THK.: 0.2MM
6	84074711	AR	SHIM, THK.: 0.05MM
7	84074701	2	BEARING, ROLLER, TAPERED,
8	84074717	1	GEAR,
9	150006	1	PLUG,
10	220025	2	SEALRING,
11	84074543	3	SET SCREW, Hex Soc, M16 x 30,
12	84074832	1	HOUSING,
13	84074391	2	DOWEL,
14	84074709	1	COVER,
15	84056523	3	BOLT, Hex, M16 x 45, 10.9,
16	84075204	1	PLATE, LOCKING,
17	84074710	1	PLATE, MOUNTING,
18	84074706	AR	SHIM, THK.: 0.5MM
18	84074707	AR	SHIM, THK.: 0.2MM
18	84074708	AR	SHIM, THK.: 0.05MM
19	84074719	1	BEARING, ROLLER, TAPERED,
20	84071596	2	LEVEL GAUGE CONTROL,
21	84074519	1	PLUG, MAGNETIC,
22	84074401	1	RING, SNAP,
23	84074402	2	BEARING, BALL,
24	84074705	1	RING,
25	84074725	1	RING,
26	84074704	1	GEAR,
27	84074403	1	RING, SNAP,
28	84074724	1	GEAR,
29	84074405	1	RING, SNAP,
30	84074395	1	RING, SNAP,
31	80370008	3	RING, SNAP,
32	84078324	1	RETAINER,
33	84072219	3	PIN,
34	84074023	6	RING,
35	84074703	69	NEEDLE,
36	84074702	3	GEAR, PLANETARY,
37	330291	10	BOLT,
38	84071633	1	FLANGE, , STANDARD
38	84071634	1	FLANGE, , FOR MUDDY CONDITIONS ONLY
38	84071703	1	FLANGE, , STANDARD, FOR NA ONLY

03.15(01) END REDUCTION, PLANETARY - C481

ссылка	Номер детали	Кол-во	Описание
38	84073413	1	FLANGE, , FOR NA ONLY, FOR MUDDY CONDITIONS ONLY
39	84074720	1	BEARING, ROLLER, TAPERED,
40	84074399	1	PLUG,
41	86521733	12	BOLT, Hex, M16 x 90, 10.9,
42	140048	12	WASHER, SPRING, Belleville, M16,
43	84074833	1	HOUSING, , FOR MUDDY CONDITIONS ONLY
43	84074831	1	HOUSING,
44	84074400	2	O-RING,
45	84074723	1	RING, SPLINED,
46	9832264	1	SEAL, , STANDARD
47	84074404	1	SET OF RINGS, , FOR MUDDY CONDITIONS ONLY
48	84074595	1	GEAR REDUCTION UNIT, (1 to 46), STANDARD
48	84074596	1	GEAR REDUCTION UNIT, (1 to 45,47), FOR MUDDY CONDITIONS ONLY
48	84074594	1	GEARBOX, FINAL REDUCTION, (1 to 46), STANDARD, FOR NA ONLY
48	84100909	1	GEARBOX, FINAL REDUCTION, (1 to 45,47), FOR NA ONLY, FOR MUDDY CONDITIONS ONLY

03.15(02) END REDUCTION, PLANETARY - D482

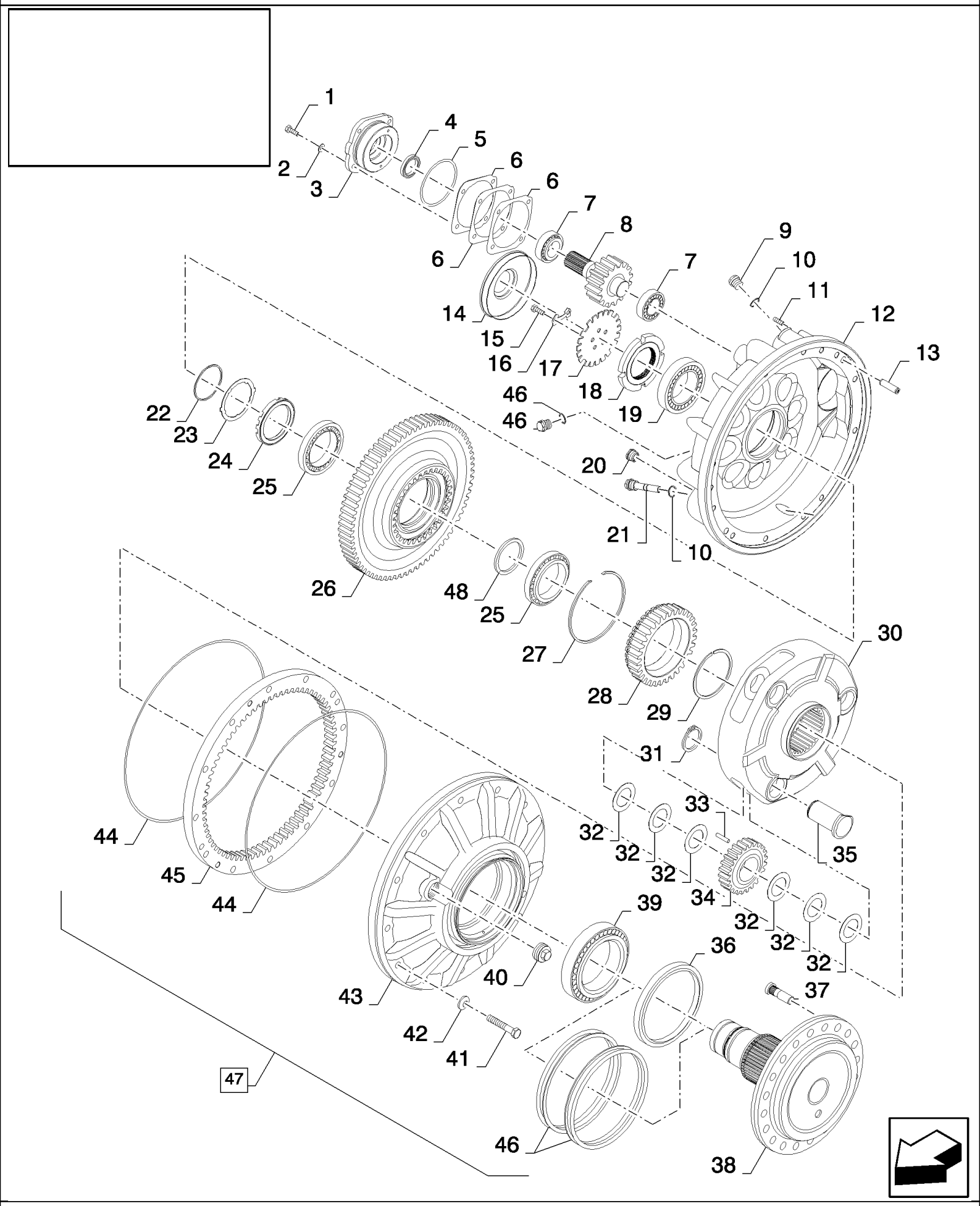

CX880 COMBINE - BASE UNIT (2/01-)

03.15(02) END REDUCTION, PLANETARY - D482

ссылка	Номер детали	Кол-во	Описание
1	43140	4	BOLT, Hex, M10 x 30, 8.8, Full Thd,
2	140045	4	WASHER, SPRING, Belleville, M10,
3	84449197	1	COVER,
4	5183845	1	SEAL,
5	84074393	1	O-RING,
6	84074713	AR	SHIM, THK.: 0.5MM
6	84074712	AR	SHIM, THK.: 0.2MM
6	84074711	AR	SHIM, THK.: 0.05MM
7	84074701	2	BEARING, ROLLER, TAPERED,
8	84449593	1	GEAR,
9	150006	1	PLUG,
10	220025	2	SEALRING,
11	84074543	3	SET SCREW, Hex Soc, M16 x 30,
12	84819478	1	COVER,
13	84074391	2	DOWEL,
14	84448749	1	COVER,
15	43138	3	SCREW, Hex, M10 x 20, 8.8, Full Thd,
16	84448750	1	PLATE, LOCKING,
17	84448751	1	PLATE, LOCKING,
18	84818180	1	NUT, LOCK,
19	84074719	1	BEARING, ROLLER, TAPERED,
20	84071596	2	LEVEL GAUGE CONTROL,
21	84074519	1	PLUG, MAGNETIC,
22	84449172	1	CIRCLIP,
23	84449597	1	PLATE, LOCKING,
24	84449598	1	NUT, LOCK,
25	84449190	2	BEARING, ROLLER, TAPERED,
26	84806528	1	GEAR,
27	84449173	1	CIRCLIP,
28	84806529	1	GEAR,
29	84074395	1	RING, SNAP,
30	84449594	1	RETAINER,
31	80370008	3	RING, SNAP,
32	84074023	6	RING,
33	84074703	69	NEEDLE,
34	84074702	3	GEAR, PLANETARY,
35	84072219	3	PIN,
36	9832264	1	SEAL, , STANDARD
37	330291	10	BOLT,
37	87282493	10	STUD, , FOR NA ONLY
38	84449573	1	AXLE, , STANDARD
38	84449320	1	SHAFT, DRIVEN, , STANDARD, FOR NA ONLY
38	84449575	1	AXLE, , FOR MUDDY CONDITIONS ONLY
38	84449574	1	AXLE, , FOR MUDDY CONDITIONS ONLY, FOR NA ONLY

ссылка	Номер детали	Кол-во	Описание
39	84074720	1	BEARING, ROLLER, TAPERED,
40	84074399	1	PLUG,
41	86521733	12	BOLT, Hex, M16 x 90, 10.9,
42	140048	12	WASHER, SPRING, Belleville, M16,
43	84448821	1	HOUSING, , STANDARD
43	84074834	1	HOUSING, , FOR MUDDY CONDITIONS ONLY
44	84074400	2	O-RING,
45	84074723	1	RING, SPLINED,
46	84074404	1	SET OF RINGS, , FOR MUDDY CONDITIONS ONLY
47	84453962	1	GEARBOX, FINAL REDUCTION, (1 to 45), STANDARD
47	84453963	1	GEARBOX, FINAL REDUCTION, , STANDARD, FOR NA ONLY
47	84453964	1	GEARBOX, FINAL REDUCTION, (1 to 33, 37 to 46), FOR MUDDY CONDITIONS ONLY
47	84453965	1	GEARBOX, FINAL REDUCTION, , FOR MUDDY CONDITIONS ONLY, FOR NA ONLY
48	87357936	1	RING, THK:4.5MM
48	87357937	1	RING, THK:4.55MM
48	87357938	1	SHIM, THK:4.65MM
48	87357939	1	SHIM, THK:4.75MM
48	87357940	1	RING, THK:4.8MM

03.16(01) CIRCUIT FOR HYDRAULIC BRAKES

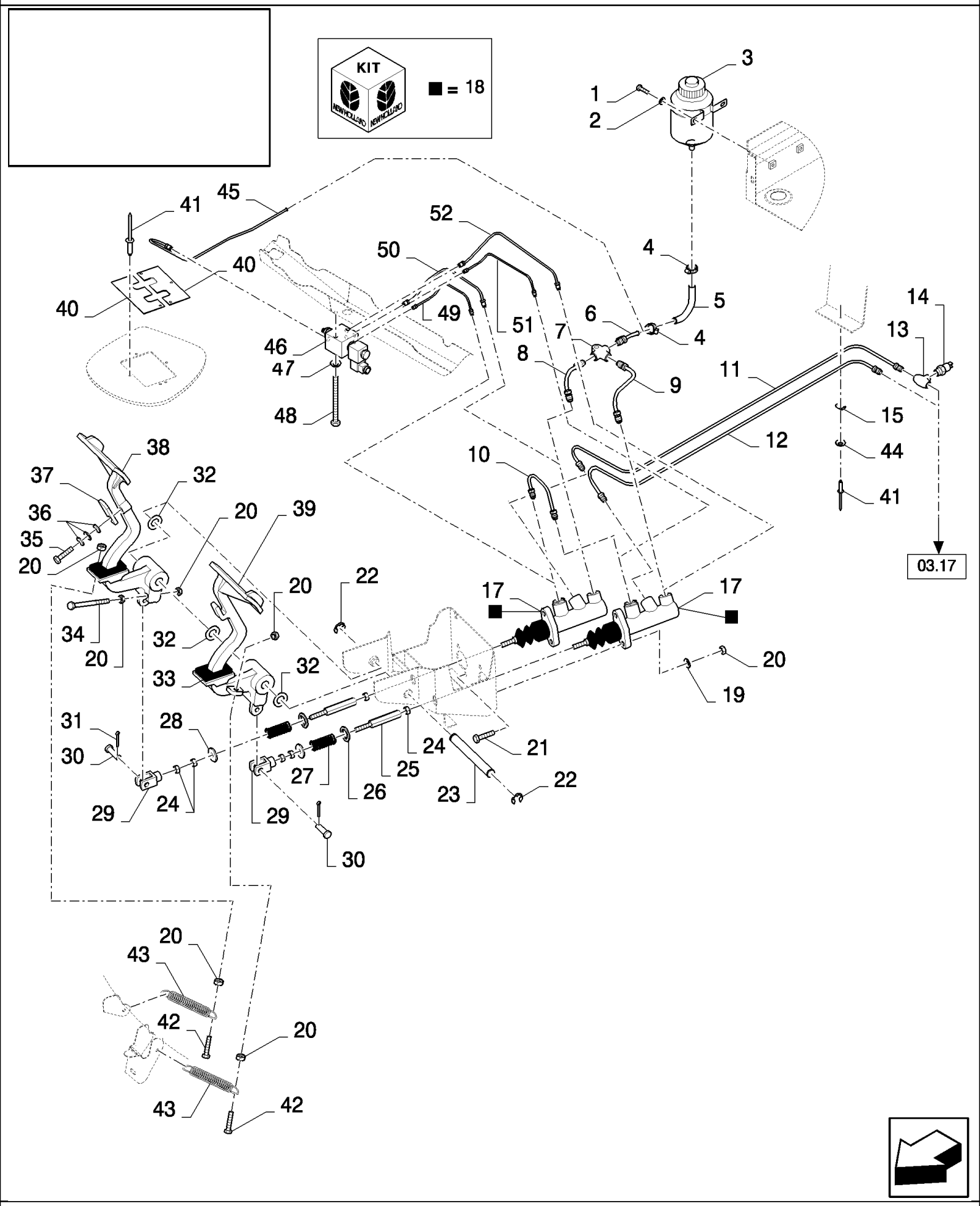

CX880 COMBINE - BASE UNIT (2/01-)

03.16(01) CIRCUIT FOR HYDRAULIC BRAKES

ссылка	Номер детали	Кол-во	Описание
1	86508568	2	SCREW, Hex, M6 x 16, 8.8,
2	322357	2	WASHER, SPRING, Belleville, M6,
3	84026053	1	RESERVOIR, BRAKE FLUID, , BSN C237
3	9819520	1	RESERVOIR, BRAKE FLUID, , ASN D238
4	913888	2	CLAMP, HOSE,
5	84100427	1	HOSE,
6	84989891	1	TUBE,
7	919855	1	TEE,
8	84989893	1	TUBE,
9	84989866	1	TUBE,
10	84989919	1	TUBE,
11	84431184	1	TUBE,
12	84431096	1	TUBE,
13	9505391	1	TEE,
14	354372	1	SWITCH, PRESSURE,
15	336760	1	CLAMP,
16	80445395	1	RIVET,
17	84062326	2	MASTER CYLINDER, (18)
17	84435867	2	MASTER CYLINDER, (18), FOR GERMANY ONLY, BSN C237
17	84062326	2	MASTER CYLINDER, (18), FOR GERMANY ONLY, ASN D238
18	84429169	2	KIT, REPAIR,
18	9817544	2	KIT, REPAIR, , FOR GERMANY ONLY, BSN C237
18	84429169	2	KIT, REPAIR, , FOR GERMANY ONLY, ASN D238
19	322358	4	WASHER, SPRING, Belleville, M8,
20	89706690	12	NUT, M8, Cl 8,
21	43127	4	BOLT, Hex, M8 x 25, 8.8,
22	84062118	2	CIRCLIP, M13,
23	84061893	1	SHAFT,
24	100097	6	NUT, Thin, M8 x 1.25, Cl 04,
25	84334737	2	COUPLING,
26	378246	2	WASHER, 16MM
27	395710	2	SPRING,
28	140041	2	WASHER, M8 x 28 x 3,
29	916433	2	CLEVIS,
30	374834	2	PIN, CLEVIS, M8 x 22,
31	9512667	2	PIN, SPLIT (COTTER), M2 x 20,
32	393062	AR	WASHER,
33	84069558	2	SEAL,
34	300382	2	BOLT, Hex, M8 x 60, 8.8, Full Thd, M8x60
34	86639028	2	BOLT, Hex, M8 x 65, 8.8, Full Thd,
35	84989606	1	BOLT, Hex, M8 x 25, 8.8,
36	397881	3	WASHER, SPRING,
37	84334941	1	PLATE,
38	84071203	1	PEDAL, RH

03.16(01) CIRCUIT FOR HYDRAULIC BRAKES

ссылка	Номер детали	Кол-во	Описание
39	84071204	1	PEDAL, LH
40	84061895	2	PLATE,
41	NS	AR	NOT SERVICED,
42	120107	2	BOLT, Hex, M8 x 50, 8.8, Full Thd,
43	9811656	2	SPRING,
44	89824840	1	WASHER, 4MM
45	84444595	1	TUBE, HYD,
46	84607499	1	VALVE, HYDRAULIC,
47	322357	1	WASHER, SPRING, Belleville, M6,
48	86508569	1	BOLT, Hex, M6 x 70, 8.8, M6x70
49	84439849	1	TUBE,
50	84444597	1	TUBE, HYD,
51	84439851	1	TUBE,
52	84444599	1	TUBE, HYD,

03.17(01) CIRCUIT FOR HYDRAULIC BRAKES

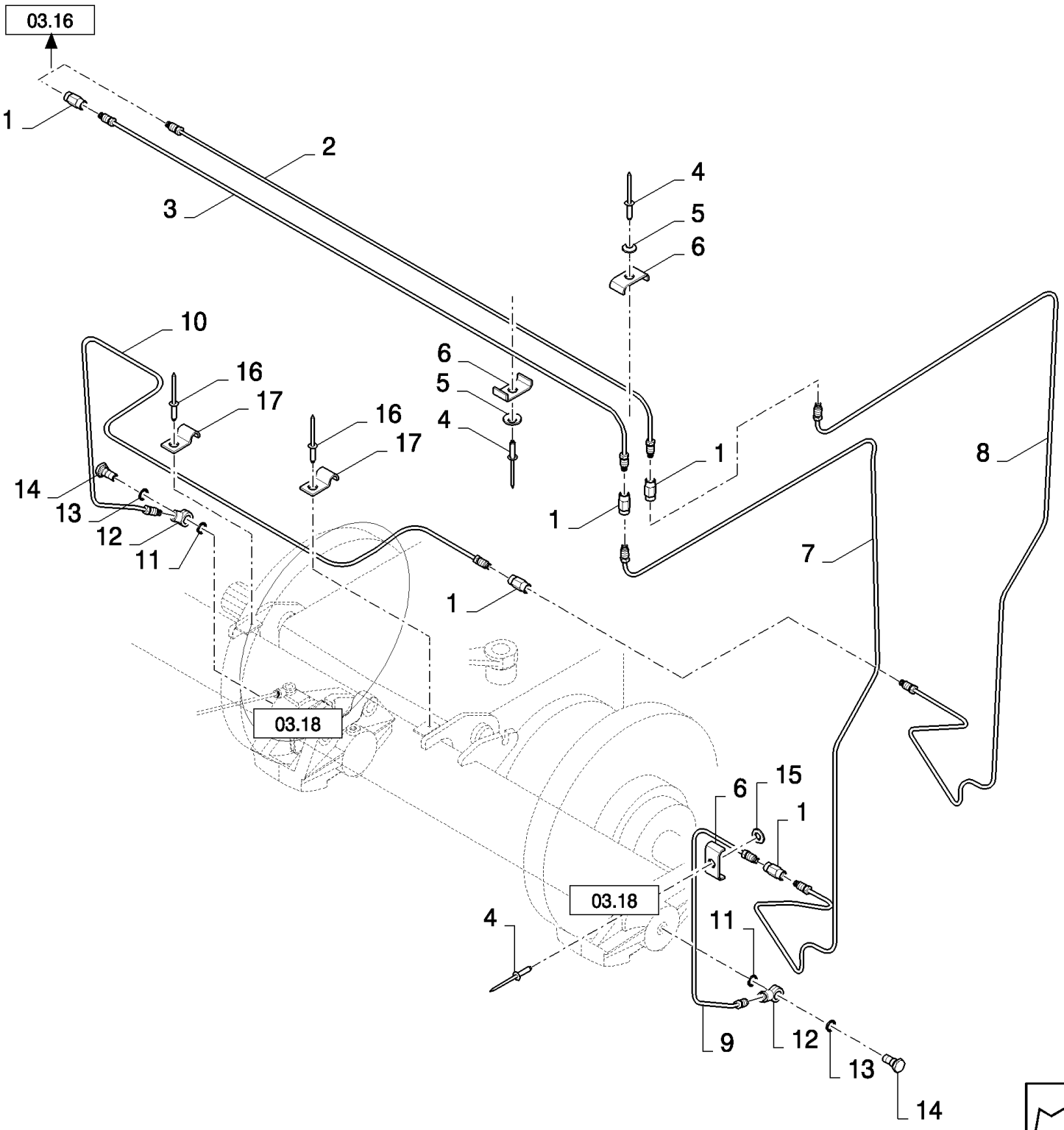

CX880 COMBINE - BASE UNIT (2/01-)

03.17(01) CIRCUIT FOR HYDRAULIC BRAKES

ссылка	Номер детали	Кол-во	Описание
1	84062540	5	CONNECTOR, HYD.,
2	84432278	1	TUBE, , FOR CX720, CX740, CX760, CX780 ONLY
2	84431259	1	TUBE, , FOR CX820, CX840 ONLY, FOR CX860, CX880 ONLY
3	84432295	1	TUBE, , FOR CX720, CX740, CX760, CX780 ONLY
3	84431238	1	TUBE, , FOR CX820, CX840 ONLY, FOR CX860, CX880 ONLY
4	NS	AR	NOT SERVICED,
5	89824840	6	WASHER, 4MM
6	336760	7	CLAMP,
7	84989956	1	TUBE,
8	84431564	1	TUBE,
9	84431312	1	TUBE, , FOR CX820, CX840 ONLY, FOR CX720, CX740, CX760, CX780 ONLY
9	84432004	1	TUBE, , FOR CX860, CX880 ONLY
10	84431544	1	TUBE, , FOR CX720, CX740, CX760, CX780 ONLY, FOR CX820, CX840 ONLY
10	84432083	1	TUBE, , FOR CX860, CX880 ONLY
11	84439102	2	WASHER, SEALING,
12	9832303	2	FITTING,
13	355607	2	SEALRING,
14	9832304	2	BOLT, BANJO,
15	140182	1	WASHER, M5 x 18 x 2,
16	425520	2	RIVET,
17	336748	2	CLAMP,

03.18(01) BRAKE DISCS

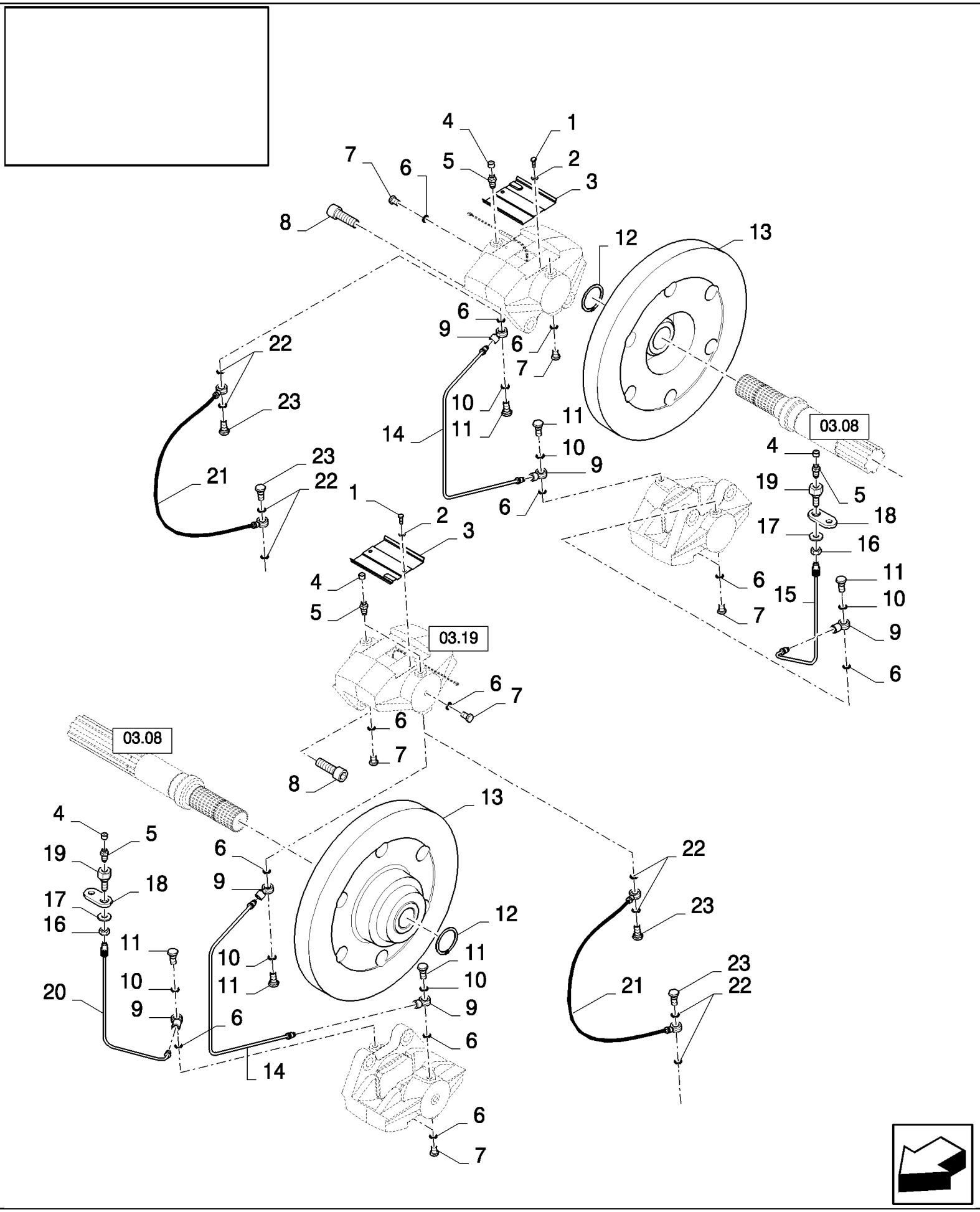

CX880 COMBINE - BASE UNIT (2/01-)

03.18(01) BRAKE DISCS

ссылка	Номер детали	Кол-во	Описание
1	300806	4	SCREW, Hex, M5 x 10, 8.8, Full Thd,
2	322356	4	WASHER, 5MM
3	84004317	2	COVER,
4	9835349	6	CAP,
5	9832308	6	PLUG,
6	9832305	14	WASHER, , BSN C225
6	84439102	14	WASHER, SEALING, , BSN F226359
6	84439102	10	WASHER, SEALING, , ASN D360
7	9832307	8	PLUG,
8	9817243	8	SCREW, Hex Soc Hd, M16 x 50, 12.9, Cap, HS, CL 12.9, M16 x 2 x 50
9	9832303	6	FITTING, , BSN C359
9	9832303	2	FITTING, , ASN D360
10	355607	6	SEALRING, , BSN C359
10	355607	2	SEALRING, , ASN D360
11	9832304	6	BOLT, BANJO, , BSN C359
11	9832304	2	BOLT, BANJO, , ASN D360
12	370007	2	RING, SNAP, M45, Ext,
13	84071125	2	BRAKE DISC, , FOR CX860, CX880 ONLY
13	84071143	2	BRAKE DISC, , FOR CX720, CX740, CX760, CX780, CX820, CX840 ONLY
14	84073447	2	TUBE, , FOR CX860, CX880 ONLY, BSN C359
14	9835995	2	TUBE, , FOR CX720, CX740, CX760, CX780, CX820, CX840 ONLY, BSN C237
14	84441718	2	TUBE, , FOR CX720, CX740, CX760, CX780, CX820, CX840 ONLY, BSN F238359
15	84431163	1	TUBE, , FOR CX860, CX880 ONLY
15	84989927	1	TUBE, , FOR CX720, CX740, CX760, CX780, CX820, CX840 ONLY
16	84022934	2	NUT, M10 x 1, Cl 8,
17	394629	2	WASHER, LOCK,
18	84075471	2	PLATE,
19	84062542	2	CONNECTOR, HYD.,
20	84431161	1	TUBE, , FOR CX860, CX880 ONLY
20	84989946	1	TUBE, , FOR CX720, CX740, CX760, CX780, CX820, CX840 ONLY
21	84447450	2	HOSE, FLEXIBLE, , ASN D360
22	84449206	8	RING, , ASN D360
23	84449205	4	SCREW, HOLLOW, , ASN D360

03.19(01) BRAKE CALIBER

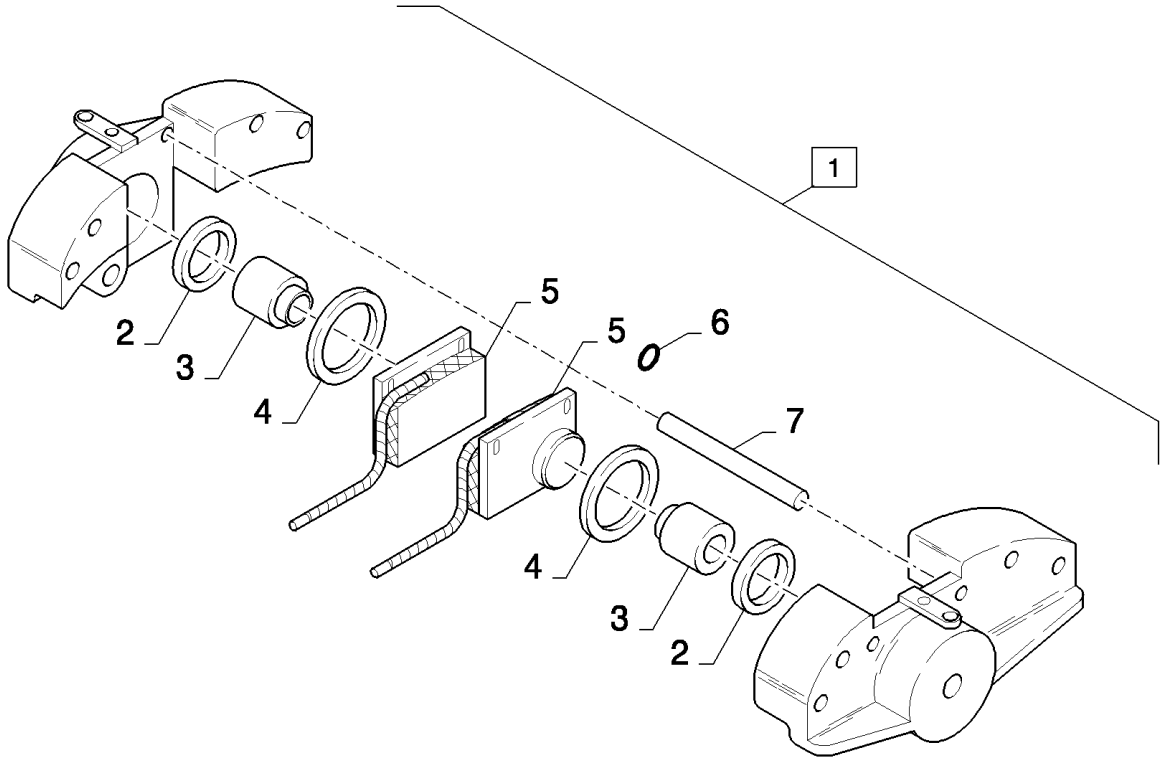

CX880 COMBINE - BASE UNIT (2/01-)

03.19(01) BRAKE CALIBER

ссылка	Номер детали	Кол-во	Описание
1	84989455	1	BRAKE CALIPER, (2 to 7)
2	9835351	2	GASKET,
3	9850149	2	PISTON,
4	9835350	2	GASKET,
5	9832306	2	BRAKE, PAD,
6	9835353	1	O-RING,
7	9850148	2	PIN,

FRONT AXLE	**ESSIEU AVANT**	**EJE DELANTERO**	**FORAKSEL**
ASSALE ANTERIORE	**VORDERACHSE**	**EIXO DIANTIERO**	**VOORAS**

SEC. 4

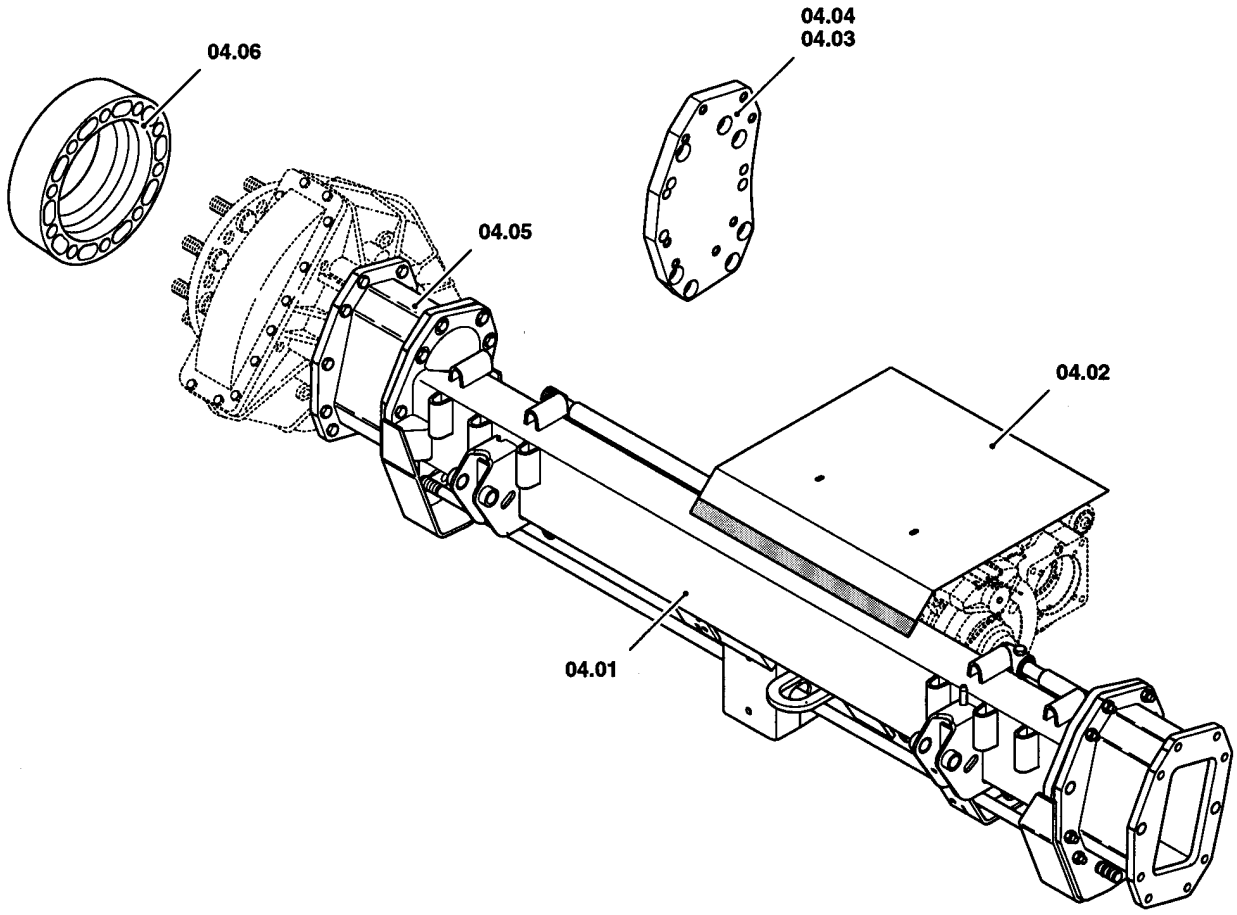

ссылка	Номер детали	Кол-во	Описание

04.01(01) FRONT AXLE

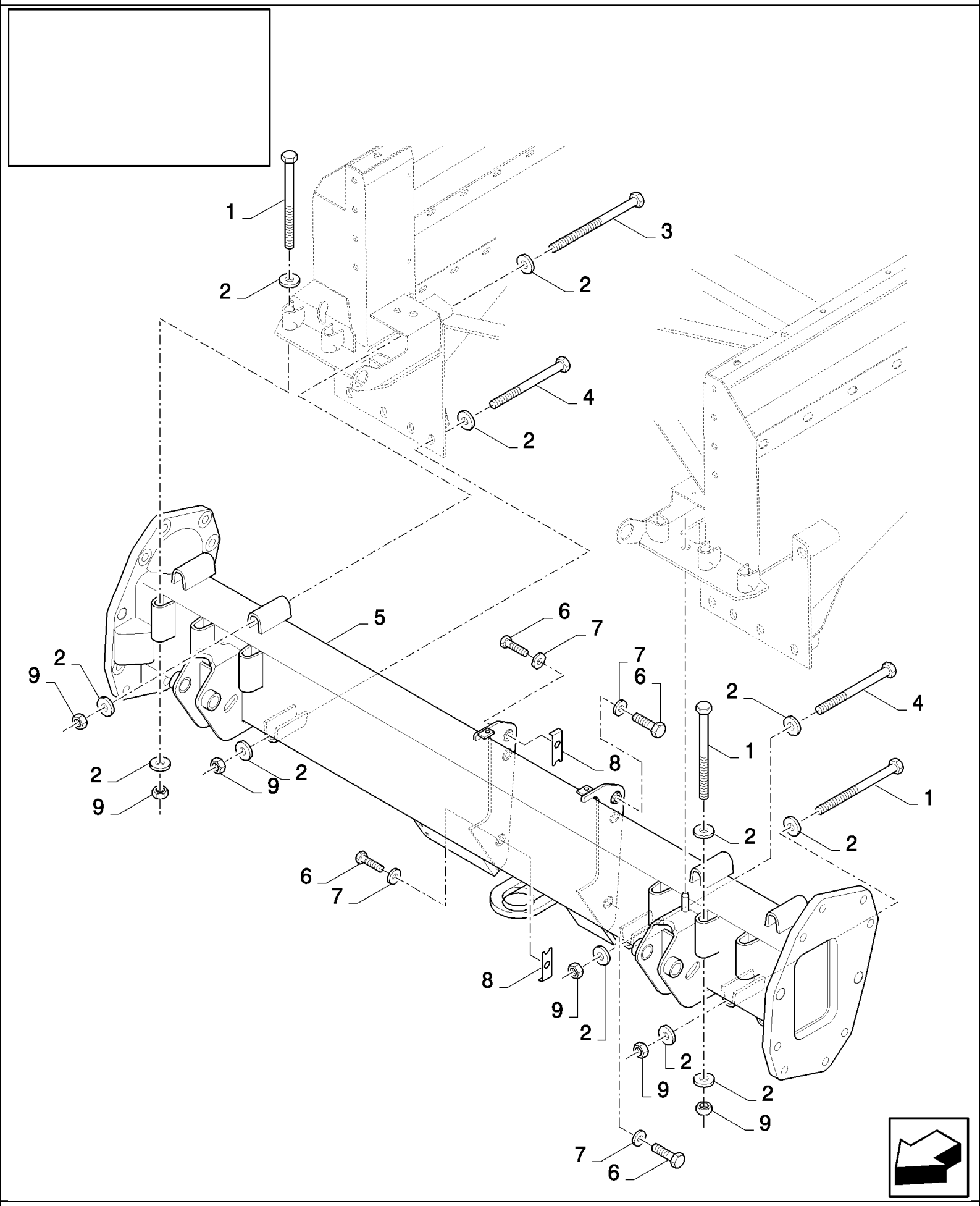

CX880 COMBINE - BASE UNIT (2/01-)

04.01(01) FRONT AXLE

ссылка	Номер детали	Кол-во	Описание
1	381523	10	BOLT, Hex, M20 x 210, 8.8,
2	84057627	32	WASHER, , BSN C225
2	84439733	32	WASHER, , ASN D226
3	84037083	4	BOLT, Hex, M20 x 260, 8.8,
4	384197	2	BOLT, Hex, M20 x 150, 8.8,
5	84073849	1	AXLE, FRONT, , FOR CX720, CX740, CX760, CX780 ONLY
5	84073192	1	AXLE, FRONT, , FOR CX820, CX840, CX860, CX880 ONLY, BSN C415
5	84457334	1	BEAM, , FOR CX820, CX840, CX860, CX880 ONLY, ASN D416
5	84073486	1	AXLE, FRONT, , FOR CX840, CX860, CX880 ONLY, FOR NA ONLY
5	84454721	1	CROSSRAIL, , FOR CX760, CX780 ONLY, SOUTH AFRICA
6	120090	6	SCREW, Hex, M16 x 50, 8.8,
7	394631	6	WASHER, 16MM
8	84073986	2	SHIM,
9	9706694	16	NUT, M20, Cl 8,

04.02(01) GEARBOX AND BRAKE PROTECTIONS

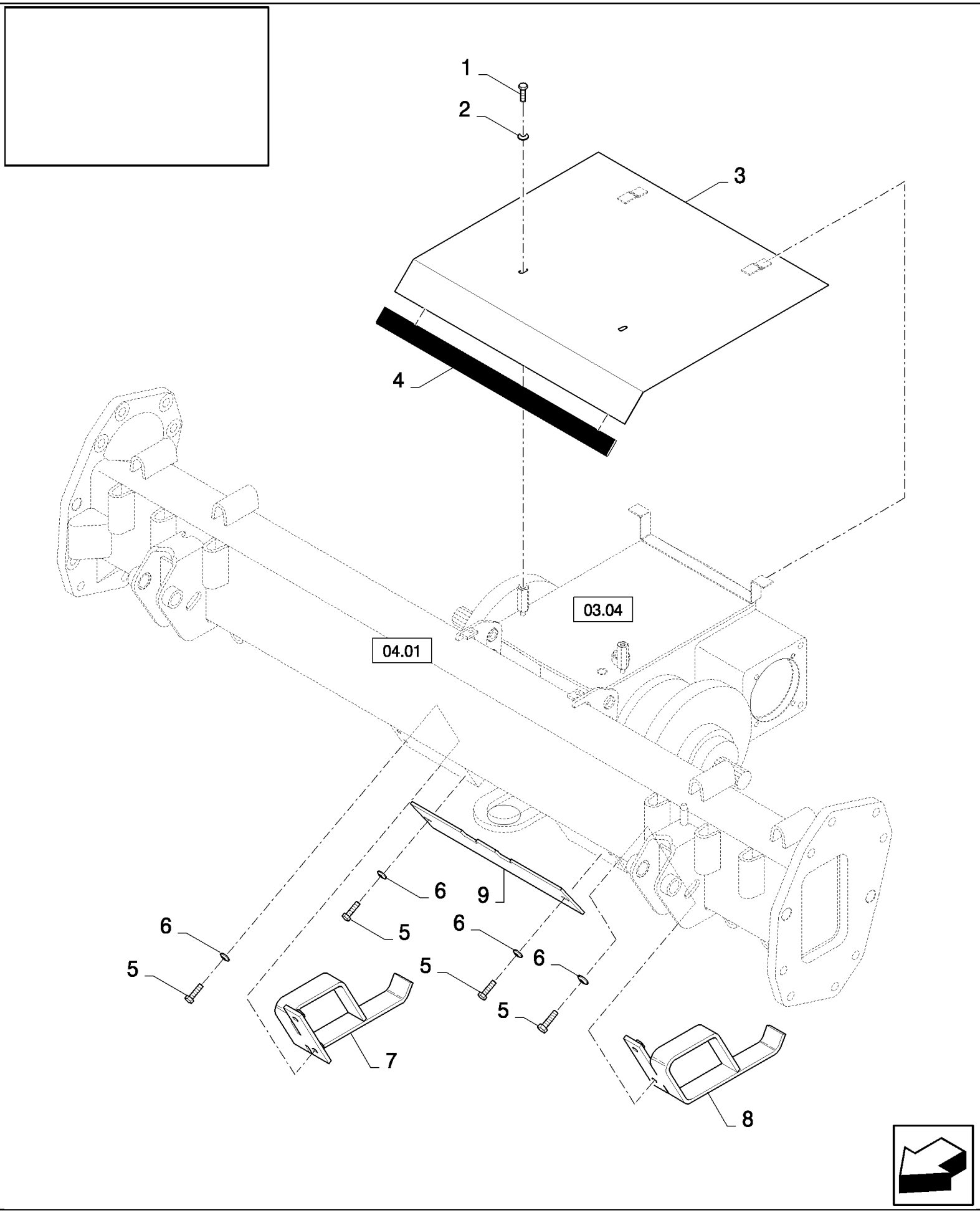

CX880 COMBINE - BASE UNIT (2/01-)

04.02(01) GEARBOX AND BRAKE PROTECTIONS

ссылка	Номер детали	Кол-во	Описание
2	412650	2	WASHER, Belleville, M8,
3	84075412	1	COVER,
4	NS	AR	NOT SERVICED, Protection strip
5	43140	6	BOLT, Hex, M10 x 30, 8.8, Full Thd,
6	140045	6	WASHER, SPRING, Belleville, M10,
7	84334570	1	SUPPORT,
8	84334556	1	SUPPORT,
9	84435587	1	PLATE,
1	16043224	2	BOLT, Hex, M8 x 16, 8.8, Full Thd,

04.03(01) PIVOT PLATES - 80-

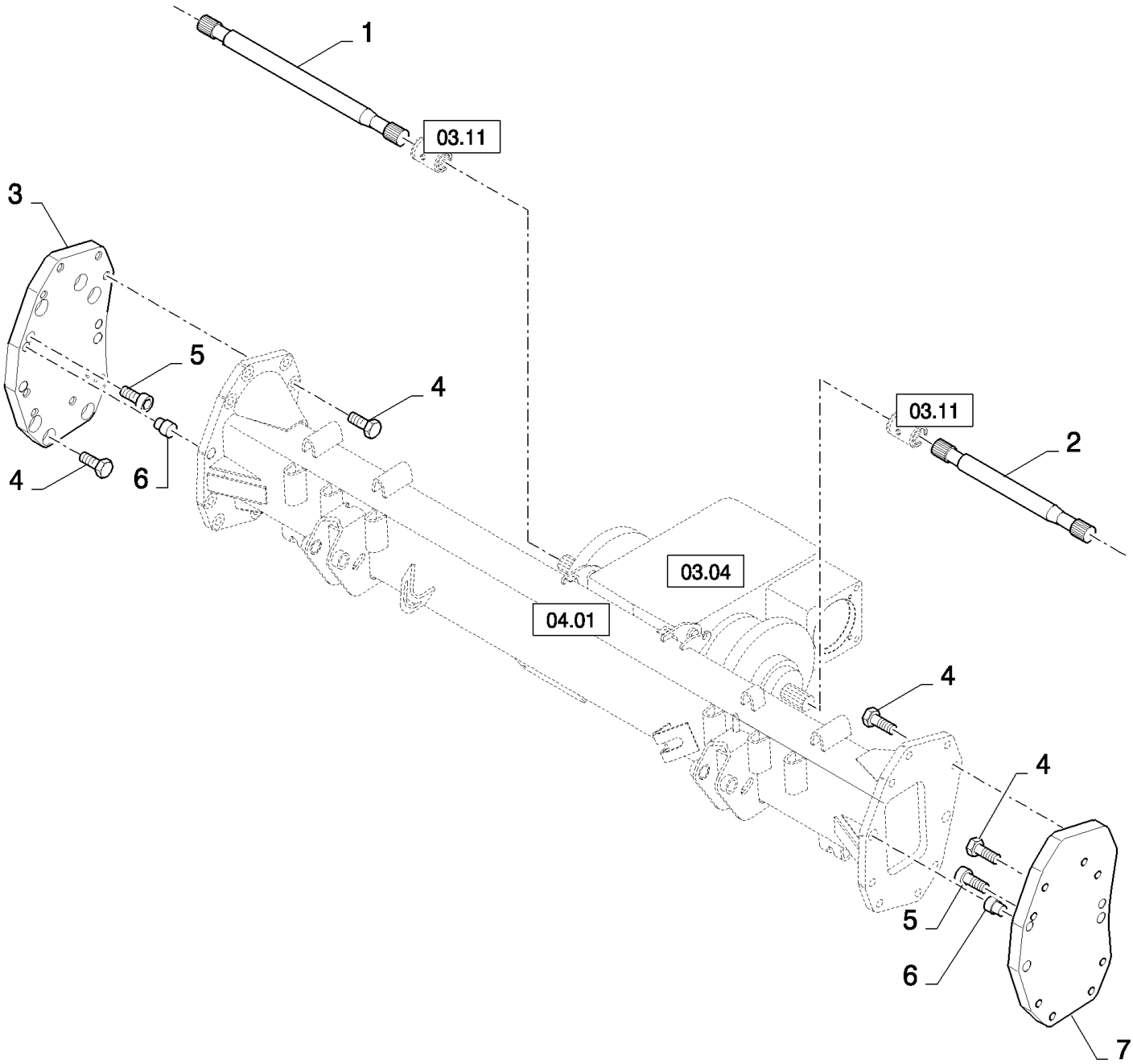

CX880 COMBINE - BASE UNIT (2/01-)

04.03(01) PIVOT PLATES - 80-

ссылка	Номер детали	Кол-во	Описание
1	84075190	1	SHAFT, CONTROL, , FOR CX860, CX880 ONLY
1	84075201	1	SHAFT, CONTROL, , FOR CX840 ONLY
2	84075188	1	SHAFT, CONTROL, , FOR CX860, CX880 ONLY
2	84075199	1	SHAFT, CONTROL, , FOR CX840 ONLY
3	84075237	1	PLATE,
4	9843590	30	BOLT, Hex, M20 x 50, 10.9,
5	84007969	2	SCREW, M20x40
6	84061975	4	PIN,
7	84075240	1	PLATE,

04.04(01) PIVOT PLATES - 127+

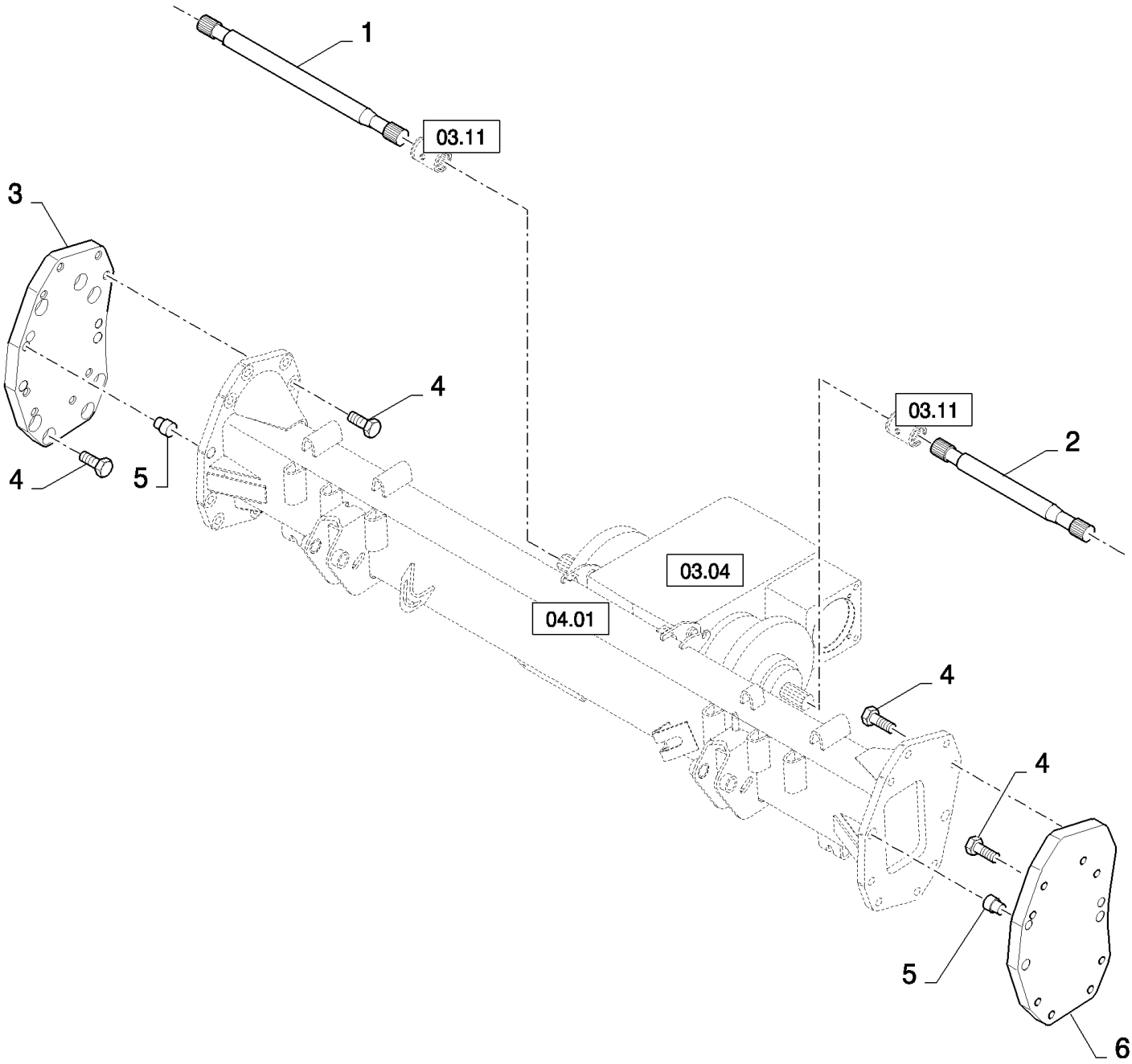

CX880 COMBINE - BASE UNIT (2/01-)

04.04(01) PIVOT PLATES - 127+

ссылка	Номер детали	Кол-во	Описание
1	84075042	1	SHAFT, CONTROL, RH, FOR CX820, CX840 ONLY, BSN C499
1	84459344	1	SHAFT, , FOR CX820, CX840 ONLY, ASN D500
1	84075186	1	SHAFT, CONTROL, RH, FOR CX860, CX880 ONLY, BSN C499
1	84459324	1	SHAFT, , FOR CX860, CX880 ONLY, ASN D500
1	84075201	1	SHAFT, CONTROL, RH, FOR NA ONLY, FOR CX840 ONLY, BSN C411
1	84801029	1	SHAFT, RH, FOR CX840 ONLY, FOR NA ONLY, ASN D412
1	84075190	1	SHAFT, CONTROL, RH, FOR NA ONLY, FOR CX860, CX880 ONLY, BSN C347
1	84440176	1	SHAFT, CONTROL, , FOR CX860, CX880 ONLY, FOR NA ONLY, ASN D348
1	84075197	1	SHAFT, CONTROL, RH, FOR CX780 ONLY
1	84075192	1	SHAFT, CONTROL, RH, FOR CX720, CX740, CX760 ONLY
1	84454704	1	SHAFT, RH, FOR SOUTH AFRICA ONLY, FOR CX760 ONLY
2	84077104	1	SHAFT, CONTROL, LH, FOR CX820, CX840 ONLY, BSN C499
2	84459345	1	SHAFT, , FOR CX820, CX840 ONLY, ASN D500
2	84075184	1	SHAFT, CONTROL, LH, FOR CX860, CX880 ONLY, BSN C499
2	84459329	1	SHAFT, , FOR CX860, CX880 ONLY, ASN D500
2	84075199	1	SHAFT, CONTROL, LH, FOR NA ONLY, FOR CX840 ONLY, BSN C411
2	84801028	1	SHAFT, LH, FOR CX840 ONLY, FOR NA ONLY, ASN D412
2	84075188	1	SHAFT, CONTROL, LH, FOR NA ONLY, FOR CX860, CX880 ONLY, BSN C347
2	84440175	1	SHAFT, CONTROL, , FOR CX860, CX880 ONLY, FOR NA ONLY, ASN D348
2	84075197	1	SHAFT, CONTROL, LH, FOR CX780 ONLY
2	84075192	1	SHAFT, CONTROL, LH, FOR CX720, CX740, CX760 ONLY
2	84454704	1	SHAFT, LH, FOR SOUTH AFRICA ONLY, FOR CX760 ONLY
3	84989726	1	PLATE, RH
4	9843590	32	BOLT, Hex, M20 x 50, 10.9,
5	626826	4	PIN,
6	84989729	1	PLATE, LH

04.05(01) EXTENSIONS - FOR NA ONLY - FOR SOUTH AFRICA

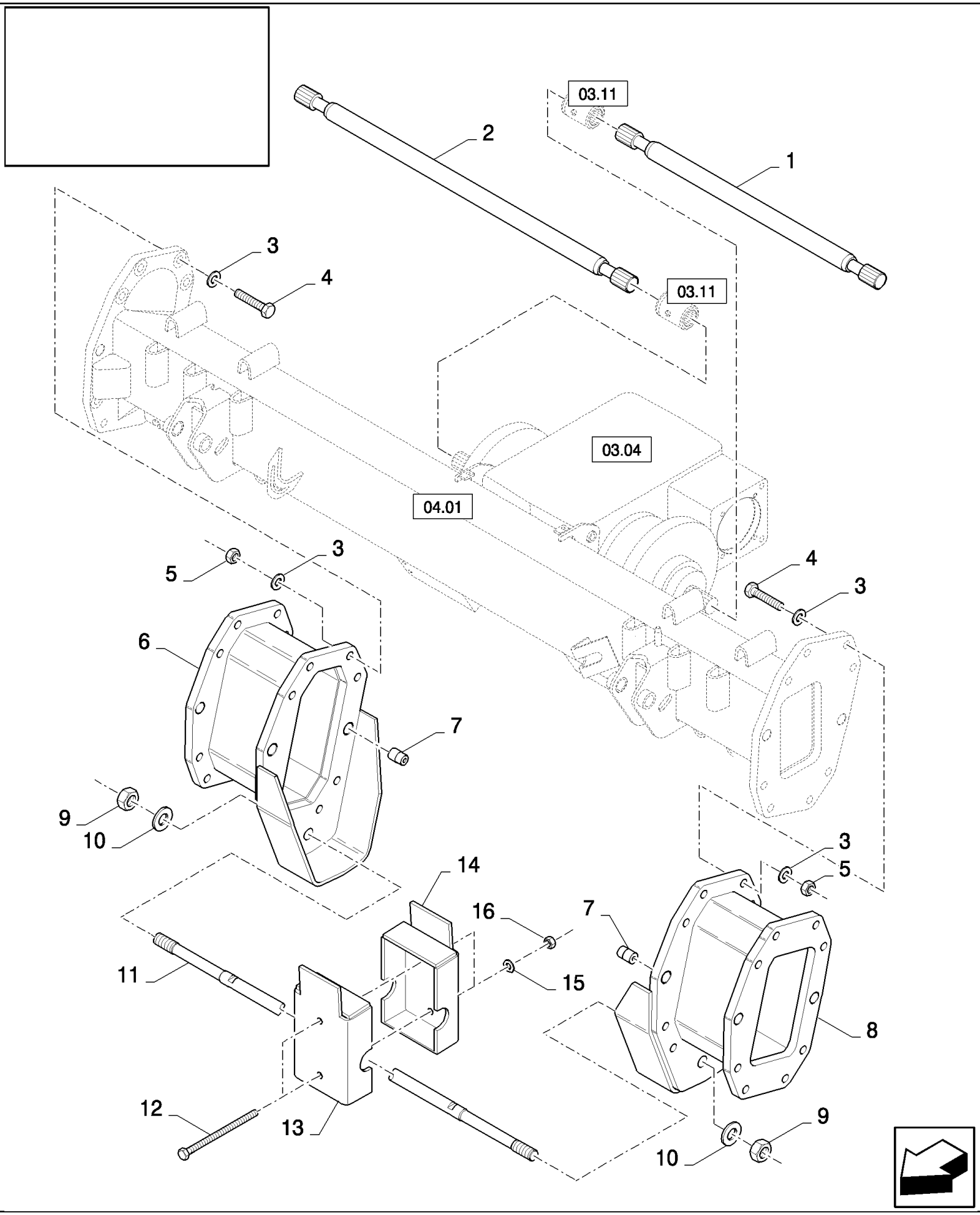

CX880 COMBINE - BASE UNIT (2/01-)

04.05(01) EXTENSIONS - FOR NA ONLY - FOR SOUTH AFRICA

ссылка	Номер детали	Кол-во	Описание
1	84440949	1	SHAFT, CONTROL, , FOR CX860, CX880 ONLY, FOR 316MM ONLY, EndYear: 11/15/2002
1	84440943	1	SHAFT, CONTROL, , FOR 316MM ONLY, FOR CX860, CX880 ONLY, Start Year: 11/15/2002, BSN C347
1	84440957	1	SHAFT, DRIVE, , FOR CX860, CX880 ONLY, FOR 316MM ONLY, ASN D348
1	84440947	1	SHAFT, CONTROL, , FOR 316MM ONLY, FOR CX840 ONLY, EndYear: 11/15/2002
1	87011353	1	SHAFT, CONTROL, , FOR CX840 ONLY, FOR 316MM ONLY, Start Year: 11/15/2002
1	84440965	1	SHAFT, CONTROL, , FOR 265MM ONLY, FOR CX860, CX880 ONLY, EndYear: 11/15/2002
1	84440967	1	SHAFT, DRIVE, , FOR CX860, CX880 ONLY, FOR 265MM ONLY, Start Year: 11/15/2002
1	84440963	1	SHAFT, CONTROL, , FOR 265MM ONLY, FOR CX840 ONLY, EndYear: 11/15/2002
1	87011357	1	SHAFT, CONTROL, , FOR CX840 ONLY, FOR 265MM ONLY, Start Year: 11/15/2002
1	84440982	1	SHAFT, CONTROL, , FOR 138MM ONLY, FOR CX860, CX880 ONLY, EndYear: 11/15/2002
1	84440985	1	SHAFT, DRIVE, , FOR CX860, CX880 ONLY, FOR 138MM ONLY, Start Year: 11/15/2002
1	84440980	1	SHAFT, CONTROL, , FOR 138MM ONLY, FOR CX840 ONLY, EndYear: 11/15/2002
1	87011361	1	SHAFT, CONTROL, , FOR CX840 ONLY, FOR 138MM ONLY, Start Year: 11/15/2002
1	84454807	1	SHAFT, , SOUTH AFRICA, FOR CX760 ONLY
2	84440955	1	SHAFT, CONTROL, , FOR CX860, CX880 ONLY, FOR 316MM ONLY, EndYear: 11/15/2002
2	84440943	1	SHAFT, CONTROL, , FOR 316MM ONLY, FOR CX860, CX880 ONLY, Start Year: 11/15/2002, BSN C347
2	84440951	1	SHAFT, DRIVE, , FOR CX860, CX880 ONLY, FOR 316MM ONLY, ASN D348
2	84440953	1	SHAFT, CONTROL, , FOR 316MM ONLY, FOR CX840 ONLY, EndYear: 11/15/2002
2	87011355	1	SHAFT, CONTROL, , FOR CX840 ONLY, FOR 316MM ONLY, Start Year: 11/15/2002
2	84440972	1	SHAFT, CONTROL, , FOR 265MM ONLY, FOR CX860, CX880 ONLY, EndYear: 11/15/2002
2	84440974	1	SHAFT, DRIVE, , FOR CX860, CX880 ONLY, FOR 265MM ONLY, Start Year: 11/15/2002
2	84440970	1	SHAFT, CONTROL, , FOR 265MM ONLY, FOR CX840 ONLY, EndYear: 11/15/2002
2	87011359	1	SHAFT, CONTROL, , FOR CX840 ONLY, FOR 265MM ONLY, Start Year: 11/15/2002
2	84440989	1	SHAFT, CONTROL, , FOR 138MM ONLY, FOR CX860, CX880 ONLY, EndYear: 11/15/2002
2	84440991	1	SHAFT, DRIVE, , FOR CX860, CX880 ONLY, FOR 138MM ONLY, Start Year: 11/15/2002
2	84440987	1	SHAFT, CONTROL, , FOR 138MM ONLY, FOR CX840 ONLY, EndYear: 11/15/2002
2	87011363	1	SHAFT, CONTROL, , FOR CX840 ONLY, FOR 138MM ONLY, Start Year: 11/15/2002
2	84454807	1	SHAFT, , SOUTH AFRICA, FOR CX760 ONLY
3	394632	32	WASHER, M20 x 40 x 4, HT,
4	87024335	16	BOLT, Hex, M20 x 80, 10.9, Full Thd, M20x80
5	87024336	16	NUT, M20
6	84440931	1	EXTENSION, , FOR 316MM ONLY, EndYear: 11/15/2002
6	87108166	1	EXTENSION, , FOR 316MM ONLY, Start Year: 11/15/2002
6	84440935	1	EXTENSION, , FOR 265MM ONLY, EndYear: 11/15/2002
6	87108187	1	EXTENSION, , FOR 265MM ONLY, Start Year: 11/15/2002
6	84440939	1	EXTENSION, , FOR 138MM ONLY, EndYear: 11/15/2002
6	87108362	1	EXTENSION, , FOR 138MM ONLY, Start Year: 11/15/2002
7	626826	4	PIN,
8	84440929	1	EXTENSION, , FOR 316MM ONLY, EndYear: 11/15/2002
8	87108164	1	EXTENSION, , FOR 316MM ONLY, Start Year: 11/15/2002
8	84440933	1	EXTENSION, , FOR 265MM ONLY, EndYear: 11/15/2002
8	87108189	1	EXTENSION, , FOR 265MM ONLY, Start Year: 11/15/2002

CX880 COMBINE - BASE UNIT (2/01-)

04.05(01) EXTENSIONS - FOR NA ONLY - FOR SOUTH AFRICA

ссылка	Номер детали	Кол-во	Описание
8	84440937	1	EXTENSION, , FOR 138MM ONLY, EndYear: 11/15/2002
8	87108364	1	EXTENSION, , FOR 138MM ONLY, Start Year: 11/15/2002
9	300852	2	NUT, M30 x 1.5, Cl 8, M30
10	140184	2	WASHER,
11	84989399	1	ROD,
12	382358	2	BOLT, Hex, M16 x 200, 8.8, , EndYear: 11/15/2002
13	84075648	1	CLAMP, , EndYear: 11/15/2002
14	84075650	1	CLAMP, , EndYear: 11/15/2002
15	140048	2	WASHER, SPRING, Belleville, M16, , EndYear: 11/15/2002
16	100020	2	NUT, M16, Cl 8, , EndYear: 11/15/2002

04.06(01) WHEEL, SPACERS - FOR NA ONLY

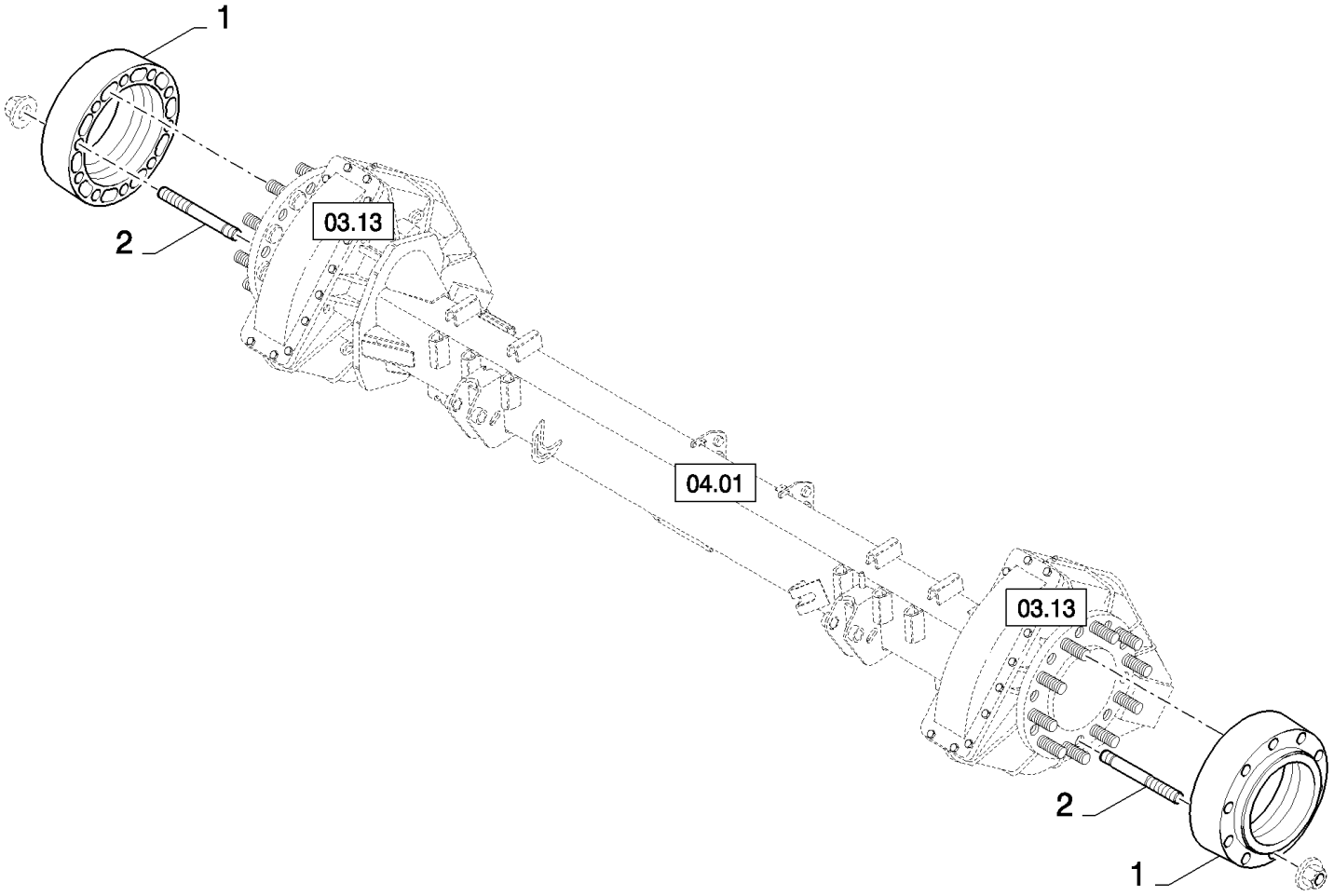

CX880 COMBINE - BASE UNIT (2/01-)

04.06(01) WHEEL, SPACERS - FOR NA ONLY

ссылка	Номер детали	Кол-во	Описание
1	84989374	2	SPACER,
2	84989380	20	STUD,

REAR AXLE	**ESSIEU POSTÉRIEUR**	**EJE POSTERIOR**	**MANCANTE**
ASSALE POSTERIORE	**HINTERACHSE**	**PONTE TRASEIRO**	**ACHTERAS**

SEC. 5

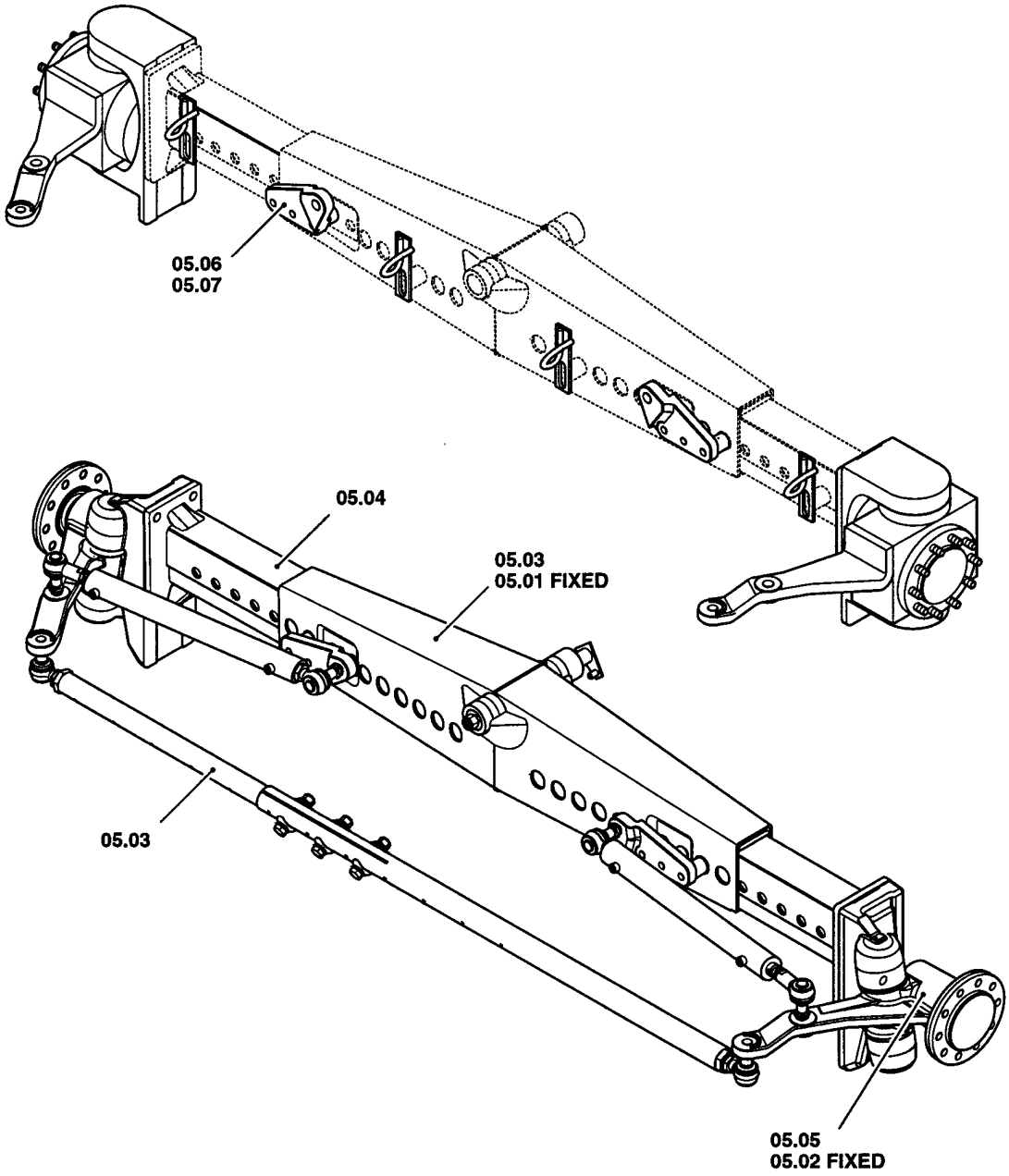

ссылка	Номер детали	Кол-во	Описание

05.01(01) AXLE, FIXED, LOW CENTER

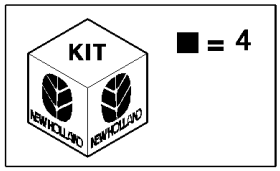

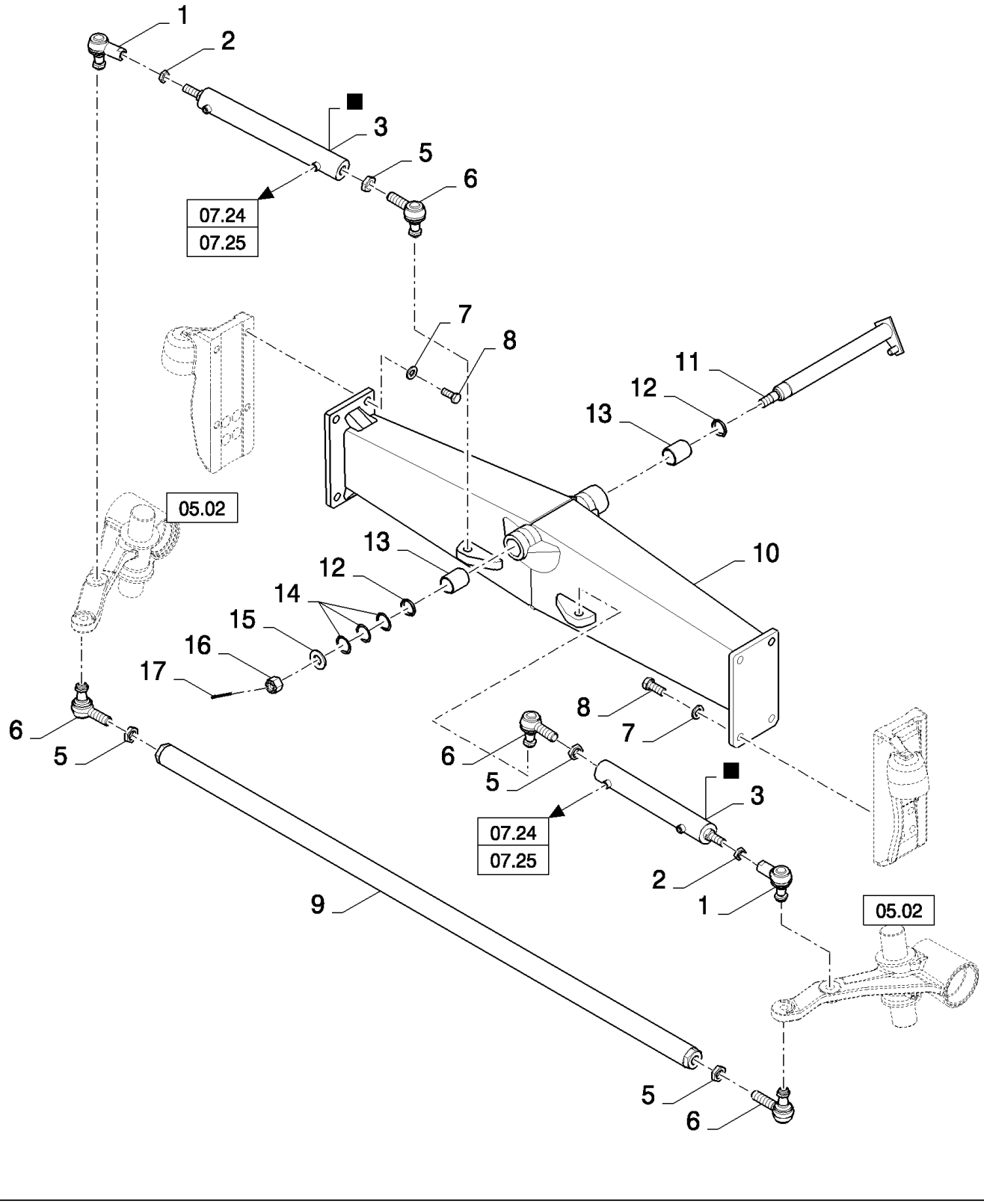

CX880 COMBINE - BASE UNIT (2/01-)

05.01(01) AXLE, FIXED, LOW CENTER

ссылка	Номер детали	Кол-во	Описание
1	429456	2	BALL JOINT,
2	100033	2	NUT, Thin, M24 x 1.5, Cl 04,
3	84435500	2	HYDRAULIC CYLINDER, (4)
4	84023925	1	KIT, REPAIR,
5	100034	4	NUT, M30 x 1.5, Cl 8,
6	84607015	4	BALL JOINT,
7	84015771	8	WASHER,
8	84075037	8	BOLT, Hex, M24 x 60, 12.9, M24x60
9	84435791	1	ROD, , FOR CX720, CX740, CX760, CX780 ONLY
9	84435401	1	ROD, , FOR CX820, CX840, CX860, CX880 ONLY
10	84435473	1	AXLE, STEERING, , FOR CX720, CX740, CX760, CX780 ONLY
10	84435231	1	AXLE, STEERING, , FOR CX820, CX840, CX860, CX880 ONLY
11	84074397	1	SHAFT,
12	84069736	2	SEAL,
13	84334438	2	BUSHING,
14	539450	3	SHIM, 0.5mm Thk,
15	327802	1	WASHER,
16	390822	1	NUT, SLOTTED, M30 x 1.5, Cl 8,
17	130016	1	PIN, SPLIT (COTTER), M6.3 x 63,

05.02(01) WHEEL HUBS, FIXED, LOW CENTER

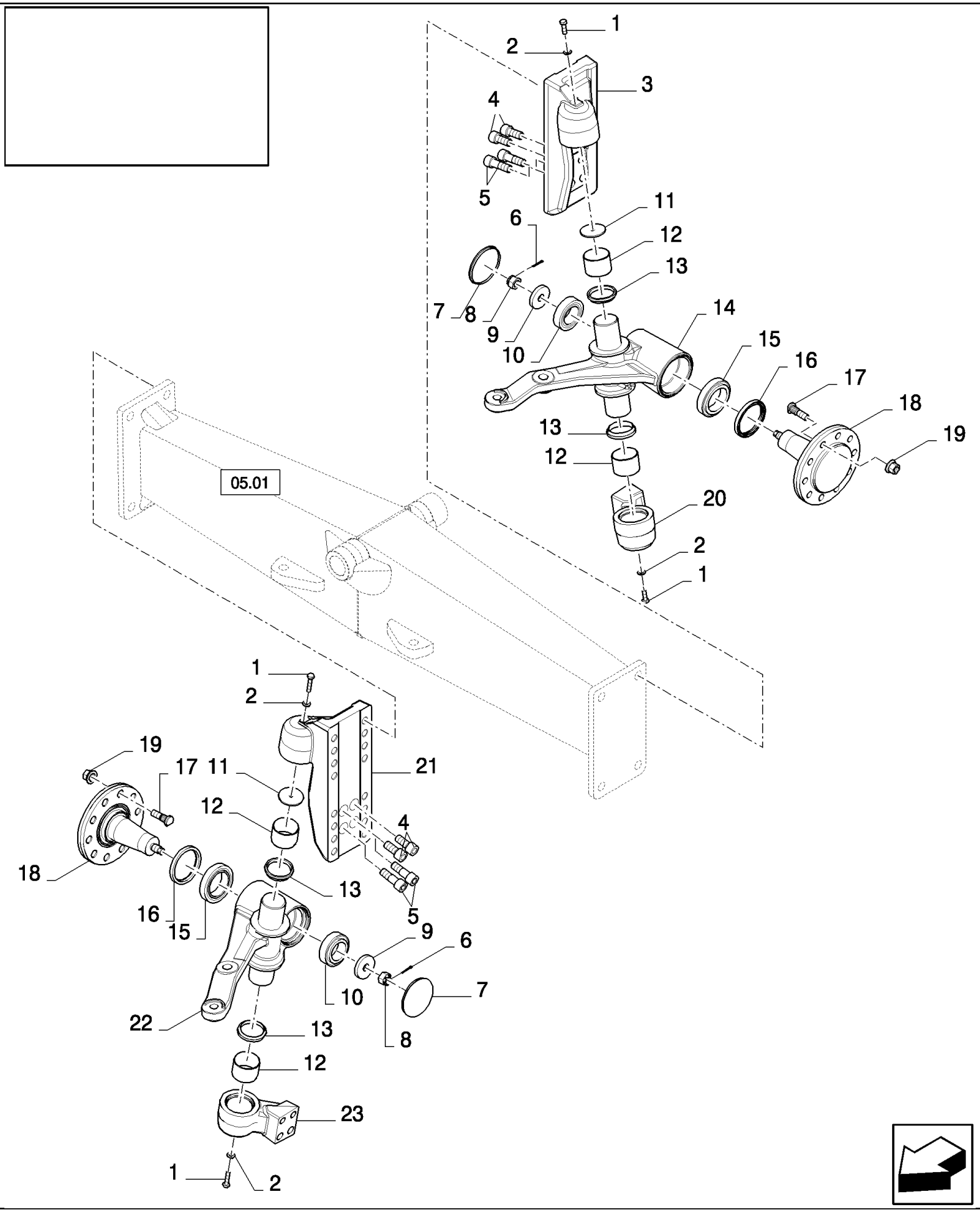

CX880 COMBINE - BASE UNIT (2/01-)

05.02(01) WHEEL HUBS, FIXED, LOW CENTER

ссылка	Номер детали	Кол-во	Описание
1	378056	4	BOLT, Hex, M6 x 10, 8.8, Full Thd,
2	446307	4	SEALRING,
3	84435428	1	SUPPORT, , BSN C363
3	84447019	1	SUPPORT, , ASN D364
4	84069447	4	SCREW, M24x50
5	84069505	4	SCREW, M24x70
6	130011	2	PIN, SPLIT (COTTER), M5 x 40,
7	84431059	2	COVER,
8	309090	2	NUT, SLOTTED, M24 x 1.5, Cl 8,
9	84064952	2	WASHER,
10	84068653	2	BEARING, ROLLER, TAPERED,
11	84074068	2	DISC,
12	84074214	4	BUSHING, , BSN C363
12	84064163	4	BUSHING, , ASN D364
13	84069731	4	SEAL,
14	84435680	1	SPINDLE, , BSN C363
14	84448543	1	SPINDLE, , ASN D364
15	84068654	2	BEARING ASSY,
16	84068674	2	SEAL, , BSN C363
16	84448802	2	SEAL, , BSN F364385
16	84454949	2	SEAL, , ASN D386
17	84062510	20	BOLT, M20
18	84074076	2	FLANGE, , BSN C363
18	84448564	2	FLANGE, , ASN D364
19	84062511	20	NUT, M20
20	84074071	1	SUPPORT, , BSN C363
20	84446948	1	SUPPORT, , ASN D364
21	84435405	1	SUPPORT, , BSN C363
21	84447020	1	SUPPORT, , ASN D364
22	84435669	1	SPINDLE, , BSN C363
22	84448542	1	SPINDLE, , ASN D364
23	84074072	1	SUPPORT, , BSN C363
23	84446949	1	SUPPORT, , ASN D364

05.03(01) AXLE, POWERED AND HEAVY DUTY (HD)

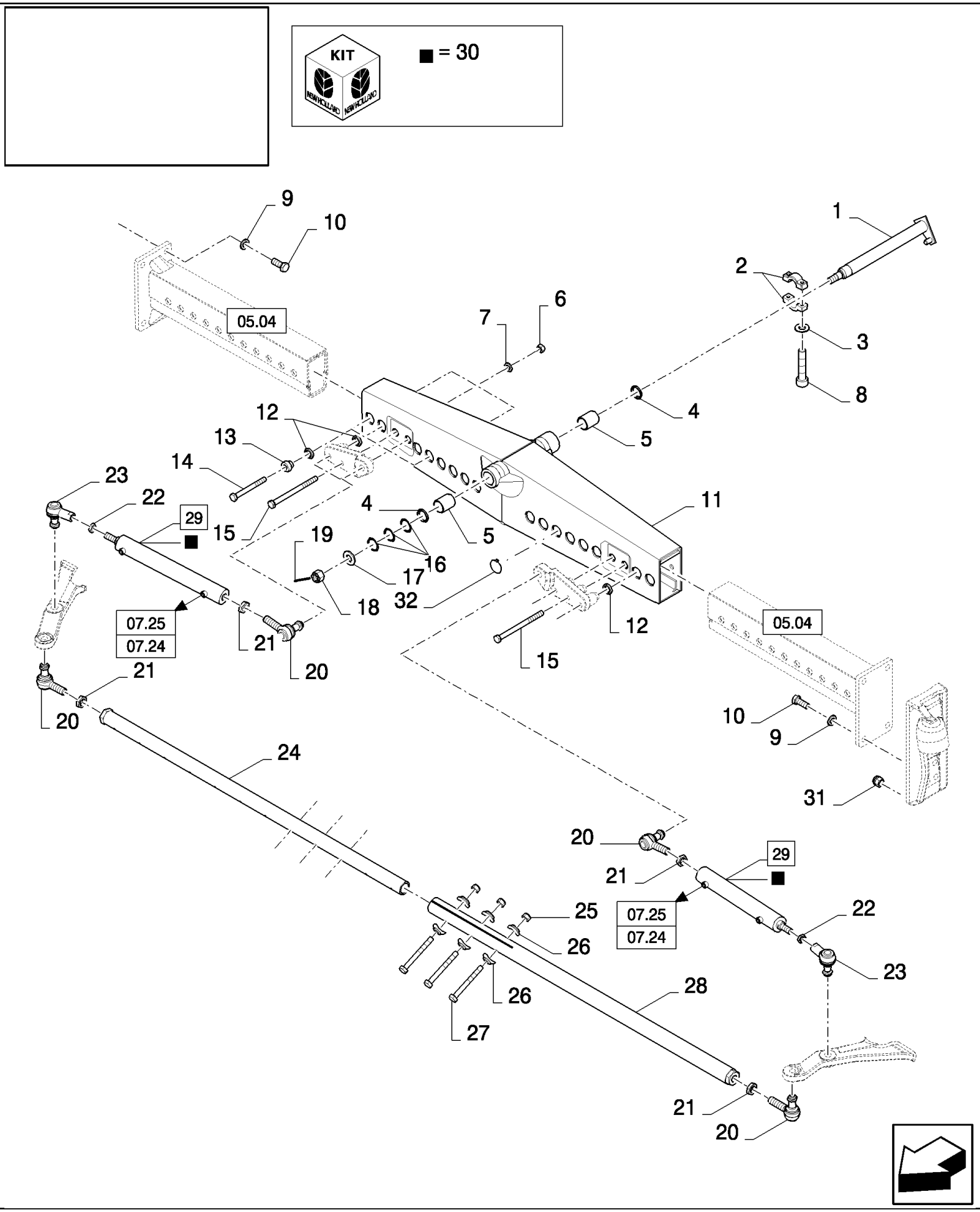

CX880 COMBINE - BASE UNIT (2/01-)

05.03(01) AXLE, POWERED AND HEAVY DUTY (HD)

ссылка	Номер детали	Кол-во	Описание
1	84074397	1	SHAFT,
2	84077496	2	CLAMP,
3	140045	2	WASHER, SPRING, Belleville, M10,
4	84069736	2	SEAL,
5	84334438	2	BUSHING,
6	84100564	10	NUT, LOCK, M20, GC, M20
7	9850384	10	WASHER,
8	84015950	2	SCREW, M10x50
9	84015771	8	WASHER,
10	84075037	8	BOLT, Hex, M24 x 60, 12.9,
11	84074066	1	AXLE, REAR,
12	84334526	6	WASHER,
13	84334525	4	BUSHING,
14	84334022	4	SCREW, Hex, M20 x 180, 10.9, M20x180, BSN C237
14	412290	4	BOLT, Hex, M20 x 180, 8.8, , ASN D238
15	86518700	6	BOLT, Hex, M20 x 260, 10.9, M20x260, BSN C237
15	84037083	6	BOLT, Hex, M20 x 260, 8.8, , ASN D238
16	539450	3	SHIM, 0.5mm Thk,
17	327802	1	WASHER,
18	390822	1	NUT, SLOTTED, M30 x 1.5, Cl 8,
19	130016	1	PIN, SPLIT (COTTER), M6.3 x 63,
20	84073399	4	BALL JOINT,
21	100034	4	NUT, M30 x 1.5, Cl 8,
22	100033	2	NUT, Thin, M24 x 1.5, Cl 04, , BSN C241
22	412321	2	NUT, M26 x 1.5, Cl 8, , ASN D242
23	84073754	2	BALL JOINT, , BSN C241
23	84814042	2	BALL JOINT, , ASN D242
24	84074074	1	TRACK ROD ASSY,
25	86514720	3	NUT, LOCK, M10
26	379401	6	CLAMP,
27	120074	3	BOLT, Hex, M10 x 90, 8.8,
28	84074075	1	TRACK ROD ASSY,
29	84071959	2	HYDRAULIC CYLINDER, (30), BSN C241
29	84814043	2	CYLINDER STEERING, (30), FOR SMART STEER AUTO-GUIDANCE, SEE FIGURE 07.40, ASN D24
30	84334447	1	KIT, SEALS, , SV ENGRAVED IN CYLINDER
30	86590994	1	KIT, SEALS,
31	84439474	12	PLUG,
32	84440667	12	PLUG,

05.04(01) EXTENSIONS, POWERED AND HEAVY DUTY

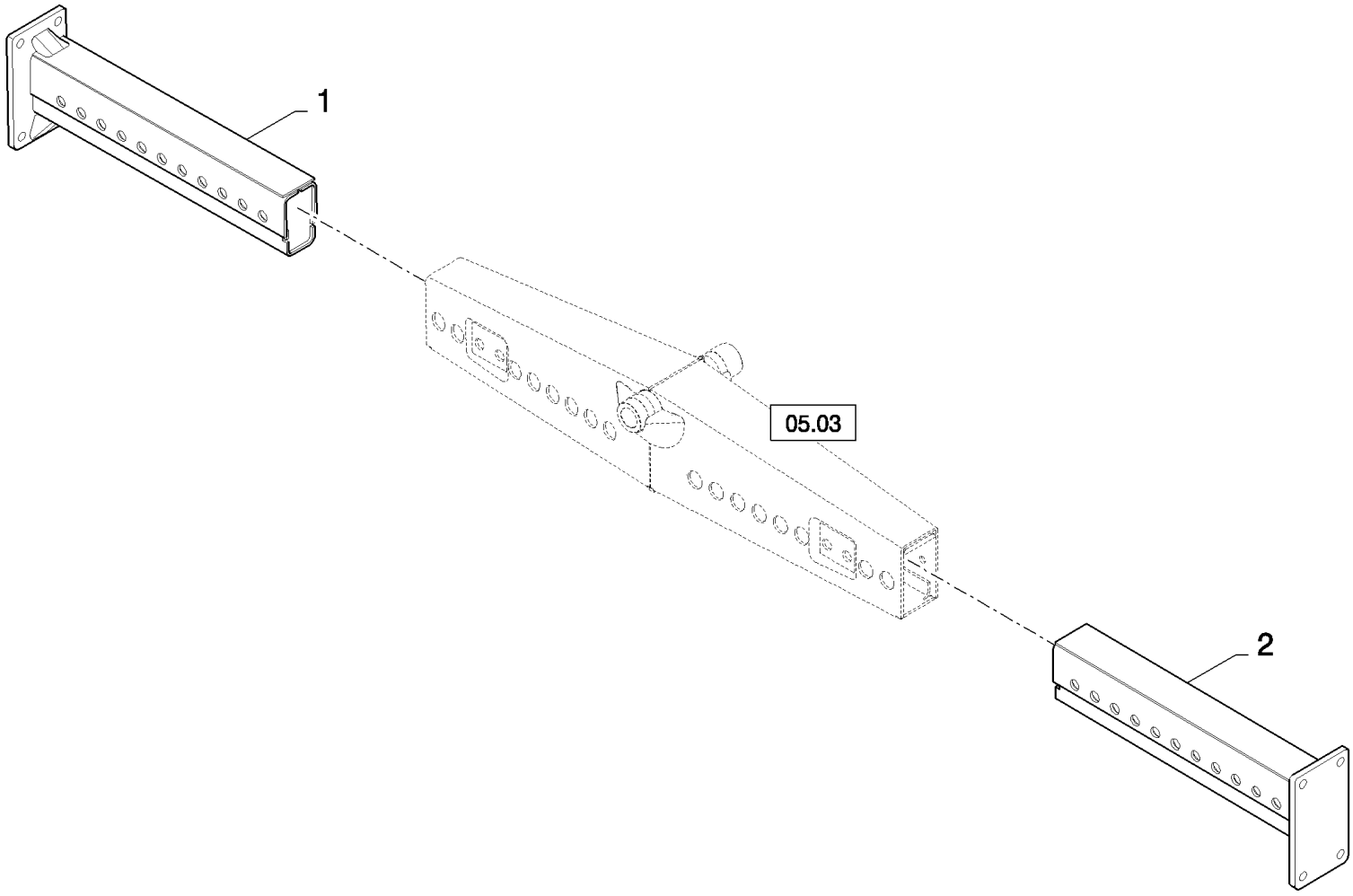

05.04(01) EXTENSIONS, POWERED AND HEAVY DUTY

ссылка	Номер детали	Кол-во	Описание
1	84334790	1	EXTENSION, , FOR CX840, CX860, CX880 ONLY, FOR NA ONLY, BSN C301
1	84074073	1	EXTENSION, , FOR NA ONLY, FOR CX840, CX860, CX880 ONLY, ASN D302
1	84074073	1	EXTENSION,
2	84334786	1	EXTENSION, , FOR CX840, CX860, CX880 ONLY, FOR NA ONLY, BSN C301
2	84074067	1	EXTENSION, , FOR NA ONLY, FOR CX840, CX860, CX880 ONLY, ASN D302
2	84074067	1	EXTENSION,

05.05(01) WHEEL HUBS, HEAVY DUTY

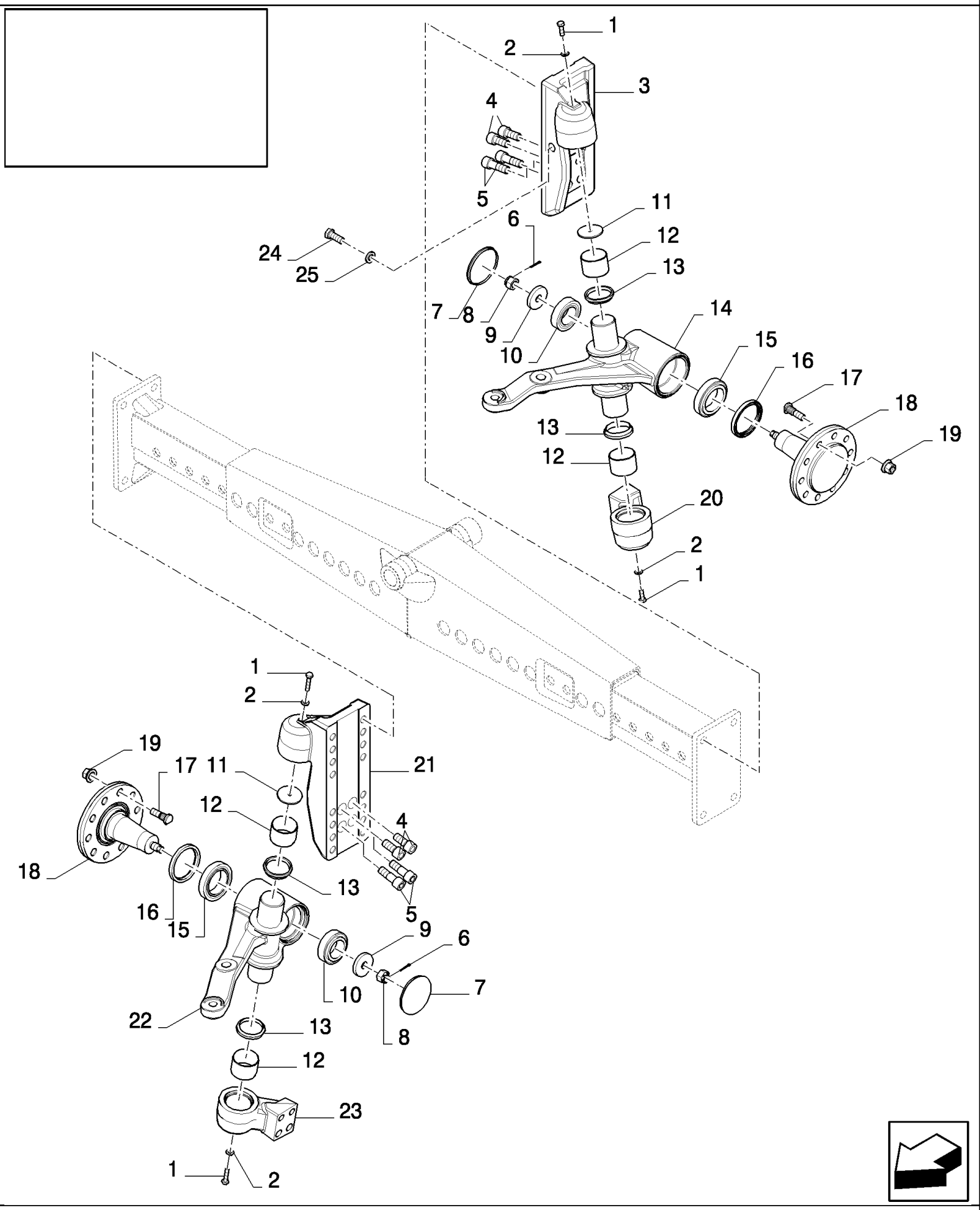

CX880 COMBINE - BASE UNIT (2/01-)

05.05(01) WHEEL HUBS, HEAVY DUTY

ссылка	Номер детали	Кол-во	Описание
1	378056	4	BOLT, Hex, M6 x 10, 8.8, Full Thd,
2	446307	4	SEALRING,
3	84074069	1	SUPPORT, , BSN C363
3	84446945	1	SUPPORT, , ASN D364
4	84069447	4	SCREW, M24x50
5	84069505	4	SCREW, M24x70
6	130011	2	PIN, SPLIT (COTTER), M5 x 40,
7	84431059	2	COVER,
8	309090	2	NUT, SLOTTED, M24 x 1.5, Cl 8,
9	84064952	2	WASHER,
10	84068653	2	BEARING, ROLLER, TAPERED,
11	84074068	2	DISC,
12	84074214	4	BUSHING, , BSN C363
12	84064163	4	BUSHING, , ASN D364
13	84069731	4	SEAL,
14	84074065	1	KNUCKLE, STEERING, , BSN C363
14	84448541	1	KNUCKLE, STEERING, , ASN D364
15	84068654	2	BEARING ASSY,
16	84068674	2	SEAL, , BSN C363
16	84448802	2	SEAL, , BSN F364385
16	84454949	2	SEAL, , ASN D386
17	84062510	20	BOLT,
17	84443588	20	BOLT, , FOR NA ONLY
18	84074076	2	FLANGE, , BSN C363
18	84448564	2	FLANGE, , ASN D364
19	84062511	20	NUT,
20	84074071	1	SUPPORT, , BSN C363
20	84446948	1	SUPPORT, , ASN D364
21	84074070	1	SUPPORT, , BSN C363
21	84446947	1	SUPPORT, , ASN D364
22	84074064	1	KNUCKLE, STEERING, , BSN C363
22	84448540	1	KNUCKLE, STEERING, , ASN D364
23	84074072	1	SUPPORT, , BSN C363
23	84446949	1	SUPPORT, , ASN D364
24	84075037	2	BOLT, Hex, M24 x 60, 12.9, M24x60
25	9848973	2	NUT, M24, Cl 10,

05.06(01) ADDITIONAL PARTS, HEAVY DUTY

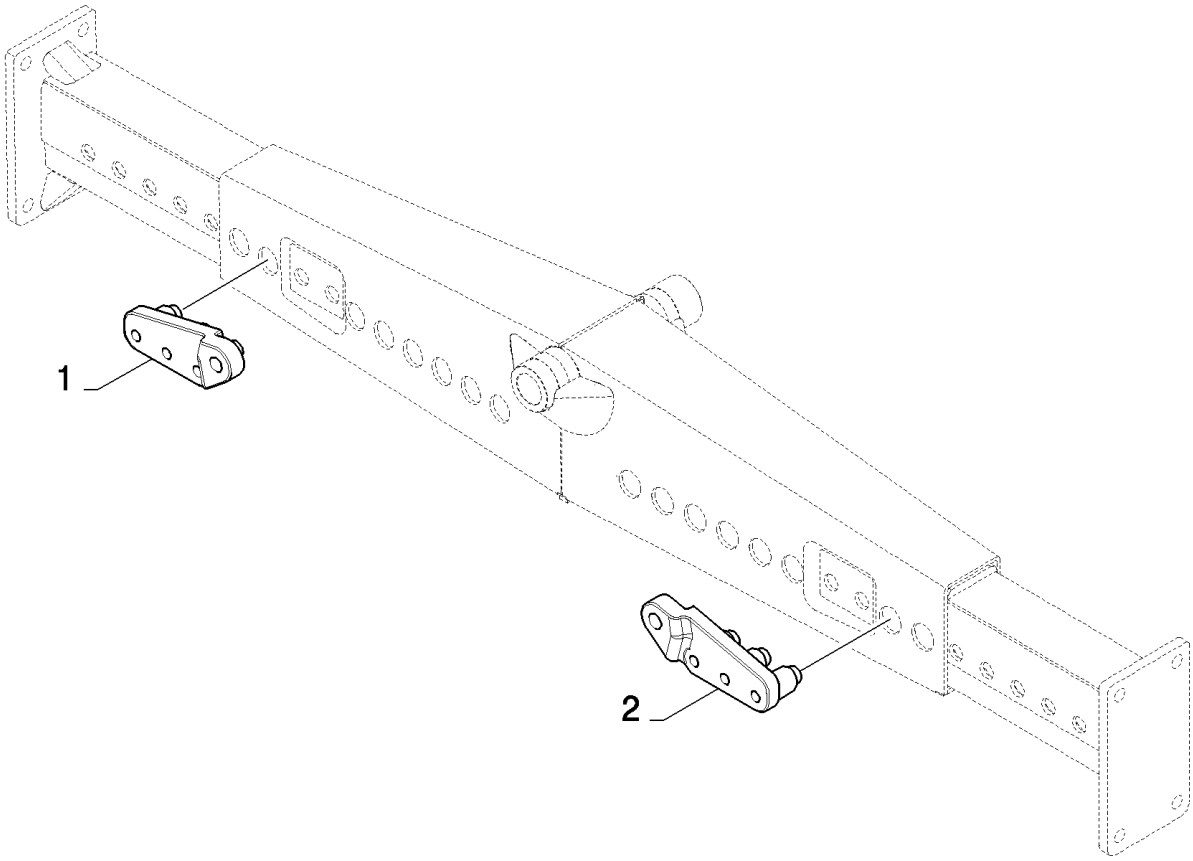

CX880 COMBINE - BASE UNIT (2/01-)

05.06(01) ADDITIONAL PARTS, HEAVY DUTY

ссылка	Номер детали	Кол-во	Описание
1	84435034	1	SUPPORT,
2	84435031	1	SUPPORT,

05.07(01) ADDITIONAL PARTS, POWERED

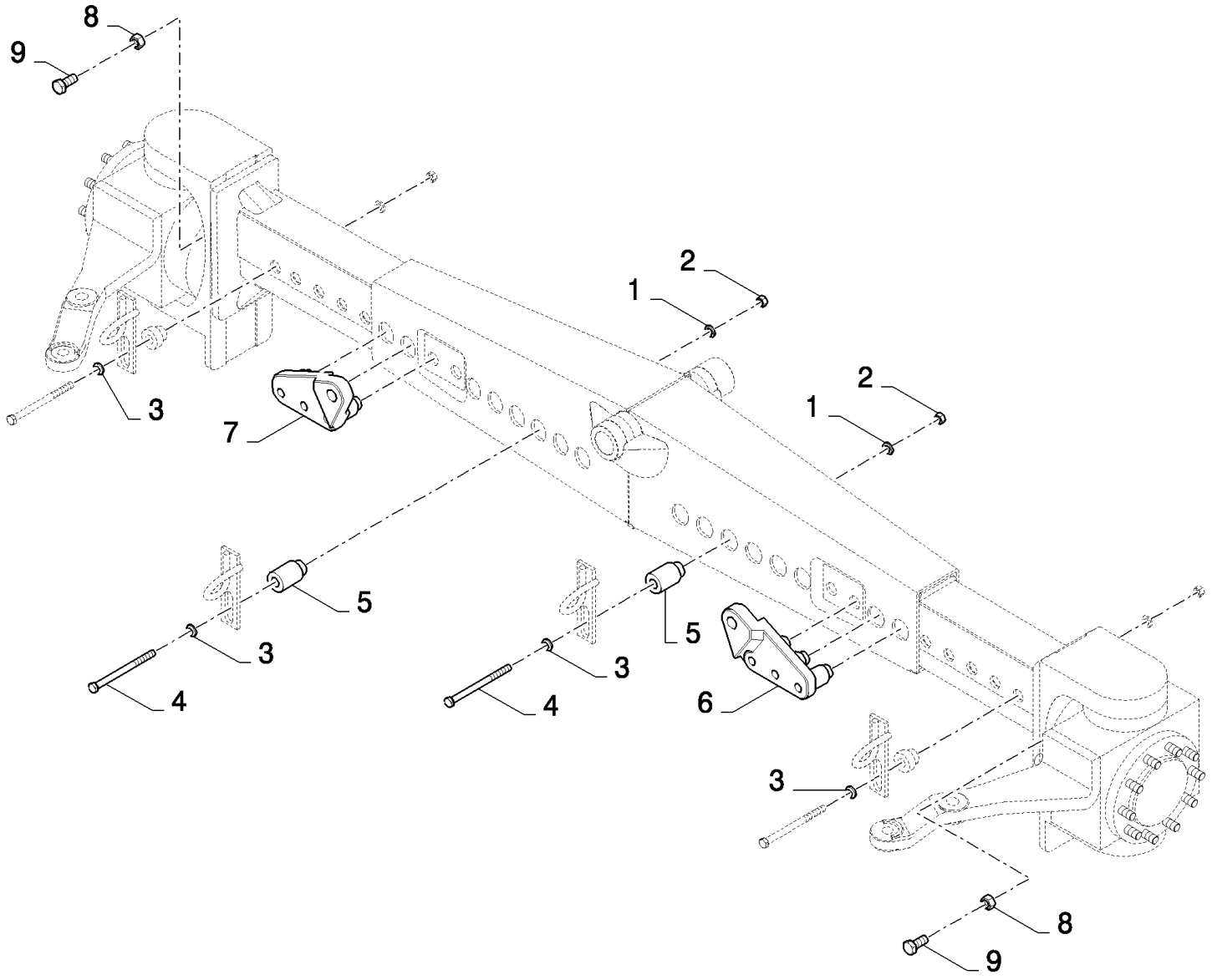

CX880 COMBINE - BASE UNIT (2/01-)

05.07(01) ADDITIONAL PARTS, POWERED

ссылка	Номер детали	Кол-во	Описание
1	9850384	2	WASHER,
2	84100564	2	NUT, LOCK, M20, GC, M20
3	322359	4	WASHER, SPRING, Belleville, M20, , BSN C363
4	86520433	2	BOLT, Hex, M20 x 240, 10.9, M20x240
5	84334527	2	BUSHING,
6	84435038	1	SUPPORT, , BSN C363
6	84435031	1	SUPPORT, , ASN D364
7	84435041	1	SUPPORT, , BSN C363
7	84435034	1	SUPPORT, , ASN D364
8	9848973	2	NUT, M24, Cl 10, M24, BSN C363
9	84075037	2	BOLT, Hex, M24 x 60, 12.9, M24x60, BSN C363

05.08(01) POWERED REAR AXLE, PRA1 - C363

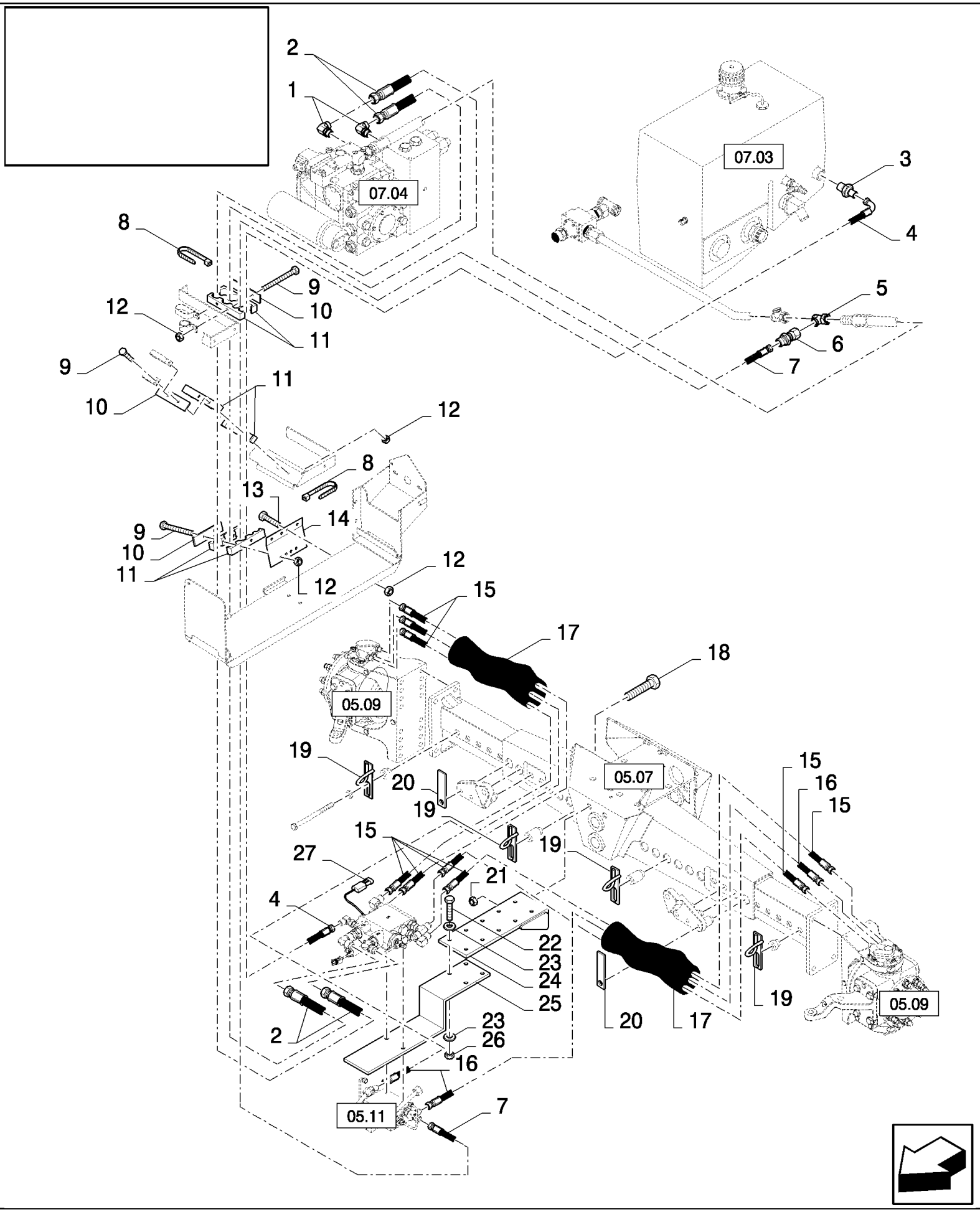

CX880 COMBINE - BASE UNIT (2/01-)

05.08(01) POWERED REAR AXLE, PRA1 - C363

ссылка	Номер детали	Кол-во	Описание
1	322894	2	ELBOW, 90є, 1 1/16"-12, 37є x 1 1/16"-12, O-Ring,
2	84807872	2	HOSE, FLEXIBLE,
3	84807113	1	CONNECTOR, HYD.,
4	84434124	1	HOSE, HYDRAULIC,
5	9507672	1	CONNECTION, 3 WAY,
6	84807863	1	CONNECTOR, HYD.,
7	84807873	1	HOSE, HYDRAULIC,
8	NS	28	NOT SERVICED,
9	84807864	6	SCREW,
10	84807571	3	BRACKET,
11	84807572	6	CLAMP,
12	412152	8	NUT, LOCK, M6 x 1, Cl 8.8,
13	86977786	2	BOLT, Hex, M6 x 25, 8.8,
14	84433892	1	BRACKET,
15	84320506	4	HOSE, HYDRAULIC,
16	84320704	2	HOSE, HYDRAULIC,
17	84320703	2	SHEATH, FLEXIBLE,
18	281074	2	BOLT, Hex, 3/4"-10 x 2 1/2", G8,
19	84807868	4	GUIDE,
20	84807875	2	BRACKET,
21	280375	2	NUT, LOCK, 3/4"-10, GC,
22	86514369	4	BOLT, Hex, 5/16"-18 x 1 1/2", G8,
23	86588450	8	WASHER, M6,
24	9512254	1	BRACKET,
25	9512209	1	BRACKET,
26	86629544	4	NUT, LOCK, 5/16"-18, GB,
27	84807867	1	HARNESS, WIRE,

05.09(01) POWERED REAR AXLE : WHEEL DRIVE, PRA1 - C363

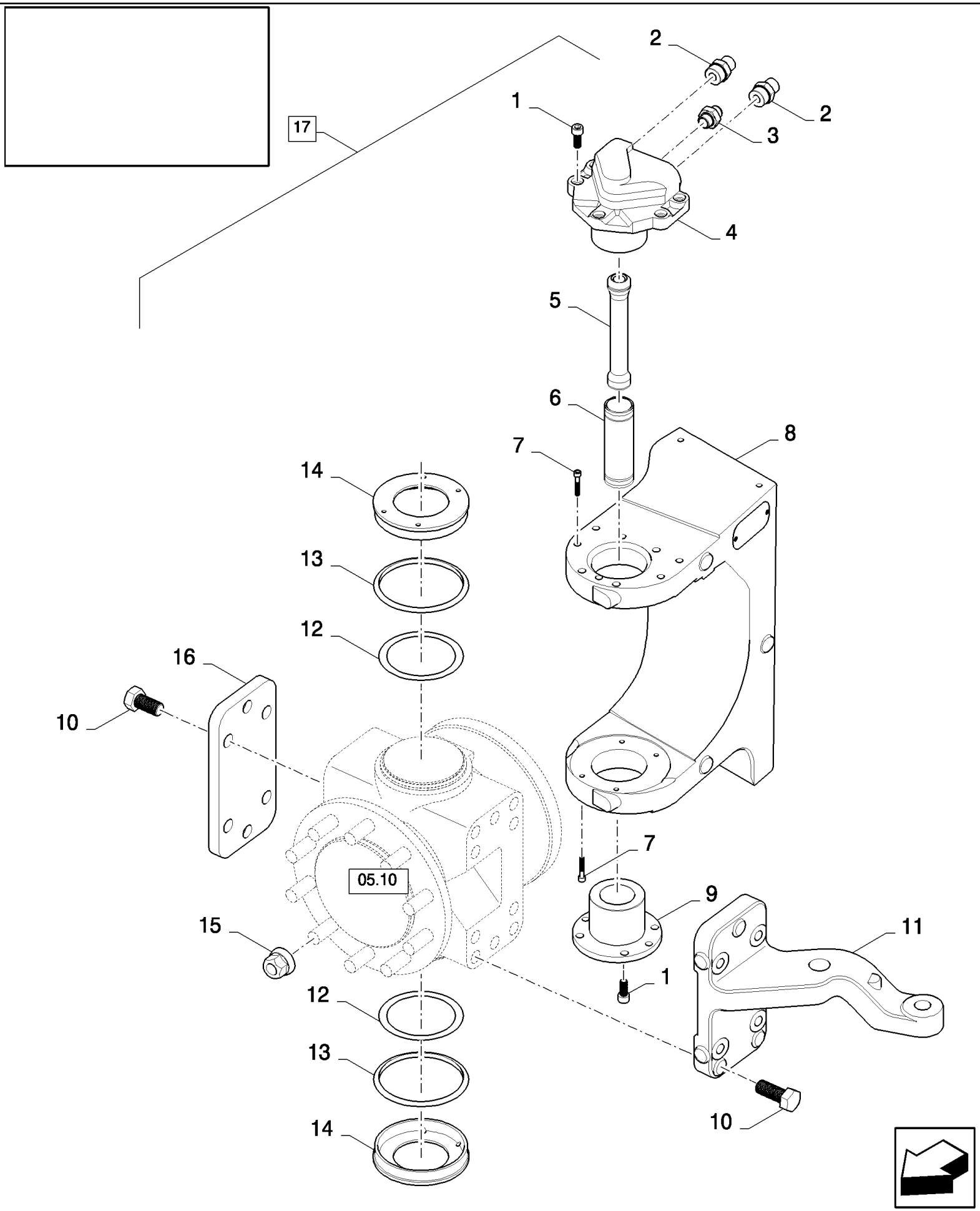

05.09(01) POWERED REAR AXLE : WHEEL DRIVE, PRA1 - C363

ссылка	Номер детали	Кол-во	Описание
1	86508097	9	SCREW, Hex Soc Hd, M10 x 25, 12.9,
2	86507102	2	CONNECTOR, HYD., 7/8"-14, 37є x 1 1/16"-12, O-Ring,
3	84018587	1	CONNECTOR, HYD.,
4	84817895	1	HUB,
5	84817898	1	TUBE, WITH O-RINGS
6	84817899	1	TUBE, WITH O-RINGS
7	9515561	8	SCREW, Hex Soc Hd, M6 x 35, 12.9,
8	84817922	1	FRAME, RH
8	84817927	1	FRAME, LH
9	84817896	1	HUB,
10	9843590	4	BOLT, Hex, M20 x 50, 10.9,
11	84817925	1	HUB, RH
11	87346790	1	HUB, RH, WITH SERVICE CAMPAIGN
11	84817928	1	HUB, LH
11	87346789	1	HUB, LH, WITH SERVICE CAMPAIGN
12	84817900	2	WASHER, THRUST,
13	84817926	2	SEALRING,
14	84817924	2	COVER,
15	9512180	10	NUT,
16	84817897	1	PLATE,
17	84320501	1	DRIVE, RH, (1 to 16)
17	84320500	1	DRIVE, LH, (1 to 16)

05.10(01) POWERED REAR AXLE : WHEEL MOTOR, PRA1 - C363

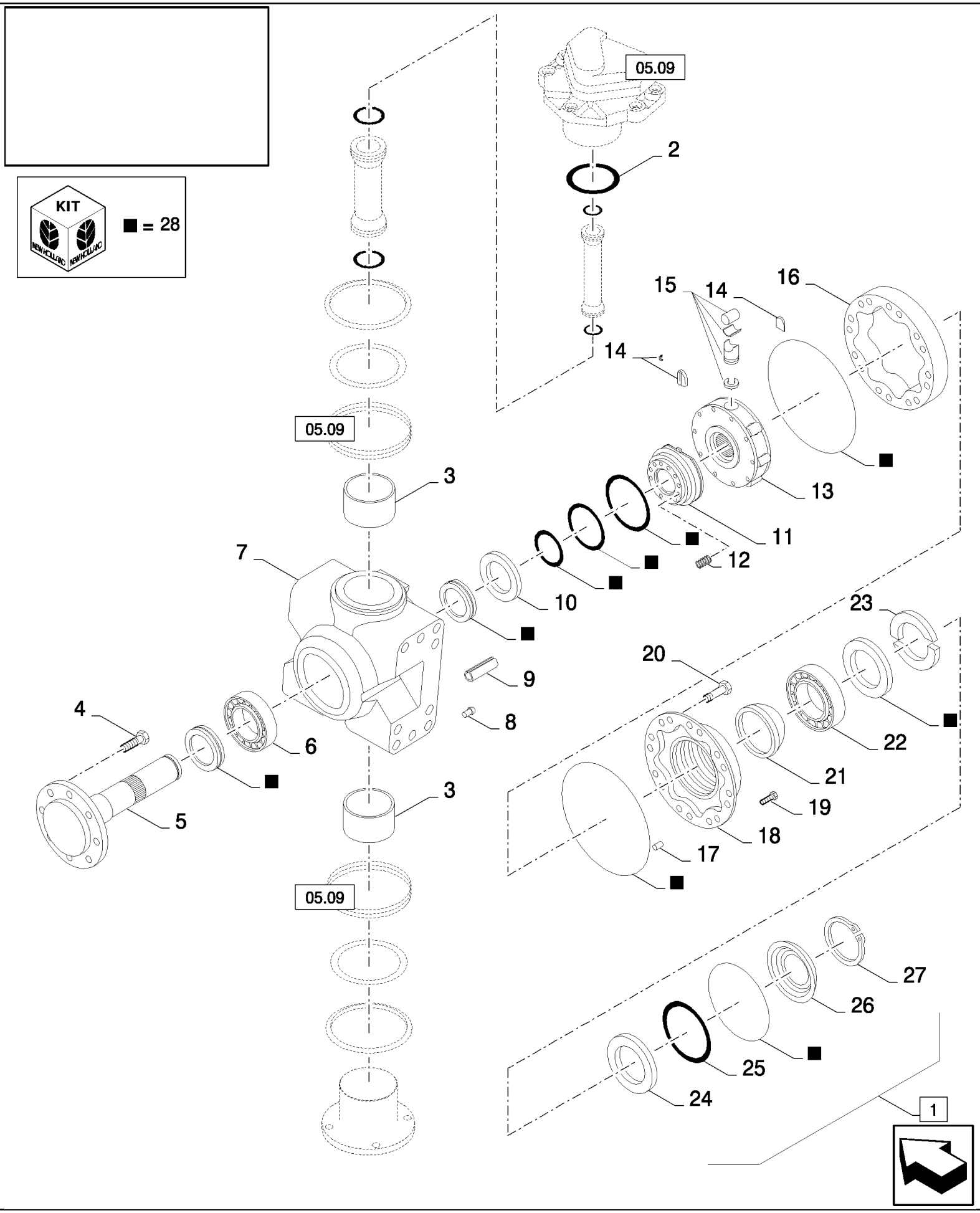

05.10(01) POWERED REAR AXLE : WHEEL MOTOR, PRA1 - C363

ссылка	Номер детали	Кол-во	Описание
1	84817923	1	MOTOR, HYDRAULIC, (2 to 28)
2	84817917	1	SEALRING,
3	84817916	2	BUSHING,
4	9512182	10	STUD,
5	84817918	1	HUB,
6	84018637	1	BEARING, ROLLER,
7	84817919	1	HOUSING,
8	84817929	4	NIPPLE, LUBE,
9	84817902	2	PIN,
10	84817903	1	SPACER,
11	9512193	1	DISTRIBUTOR,
12	9512195	8	SPRING,
13	84817904	1	ROTOR,
14	84018631	1	KIT,
15	9512215	1	KIT,
16	84817905	1	CAM,
17	84817906	2	PIN,
18	84817907	1	HOUSING,
19	84817908	2	PLUG,
20	84817887	14	SCREW,
21	84817909	1	SPACER,
22	84817910	1	BEARING ASSY,
23	84817911	2	HALF-RING,
24	84817912	1	RING,
25	84817913	1	RING,
26	84817914	1	COVER,
27	84817915	1	CIRCLIP,
28	84817901	1	KIT, SEALS,

05.11(01) POWERED REAR AXLE : VALVE, PRA1 - C363

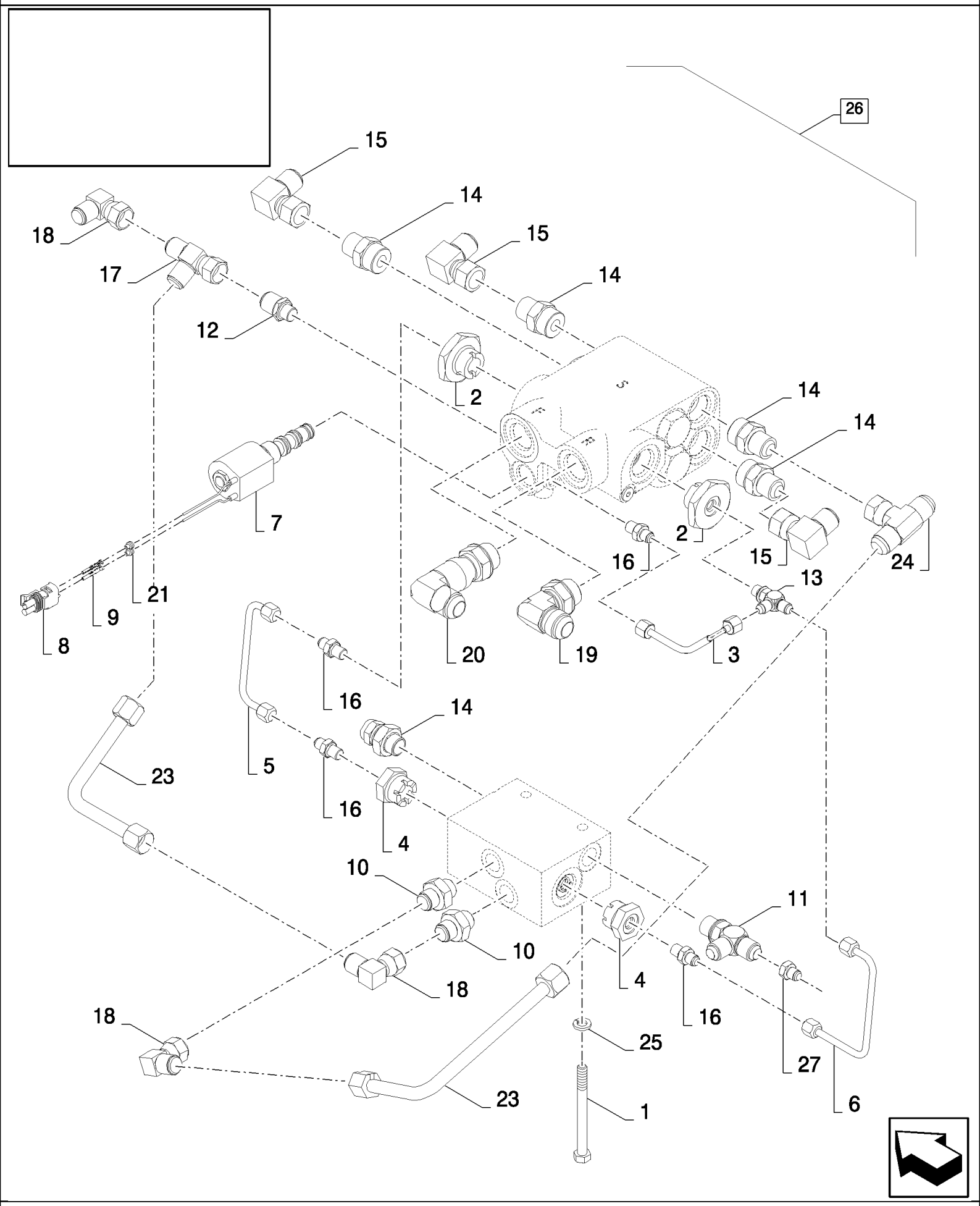

CX880 COMBINE - BASE UNIT (2/01-)

05.11(01) POWERED REAR AXLE : VALVE, PRA1 - C363

ссылка	Номер детали	Кол-во	Описание
1	280109	2	BOLT, Hex, 3/8"-16 x 4", G8,
2	9512150	2	CONNECTOR, HYD.,
3	9512171	1	TUBE,
4	84817888	2	CONNECTOR, HYD.,
5	84817889	1	TUBE,
6	84817890	1	TUBE,
7	84817891	1	VALVE, SOLENOID,
8	84817893	1	CONNECTOR, WIRE,
9	84817894	2	TERMINAL,
10	84018587	3	CONNECTOR, HYD.,
11	265808	1	TEE, 3/4"-16, 37є x 3/4"-18, O-Ring Run,
12	9512223	1	CONNECTOR, HYD.,
13	9512226	1	CONNECTION, 3 WAY,
14	86507102	4	CONNECTOR, HYD., 7/8"-14, 37є x 1 1/16"-12, O-Ring,
15	182977	3	ELBOW, 90є, 7/8"-14, 37є x 7/8"-14, 37є Fem Sw,
16	265235	4	CONNECTOR, HYD., 7/16"-20, 37є x 7/16"-20, O-Ring,
17	86511870	1	TEE, 37є, 3/4"-16 x 3/4"-16, Fem Sw Run,
18	248974	3	ELBOW, 90є, 3/4"-16, 37є x 3/4"-16, 37є Fem Sw, , BSN C319
18	248974	4	ELBOW, 90є, 3/4"-16, 37є x 3/4"-16, 37є Fem Sw, , ASN D320
19	322894	1	ELBOW, 90є, 1 1/16"-12, 37є x 1 1/16"-12, O-Ring,
20	9512237	1	ELBOW,
21	84817892	2	SEAL,
22	84817920	1	TUBE,
23	84817921	1	TUBE,
24	86513016	1	TEE, 37є, 7/8"-14 x 7/8"-14, Fem Sw Br,
25	140045	2	WASHER, SPRING, Belleville, M10,
26	84807874	1	VALVE, HYDRAULIC, (1 to 25,27)
27	84818550	1	CONNECTOR, HYD., , ASN D320

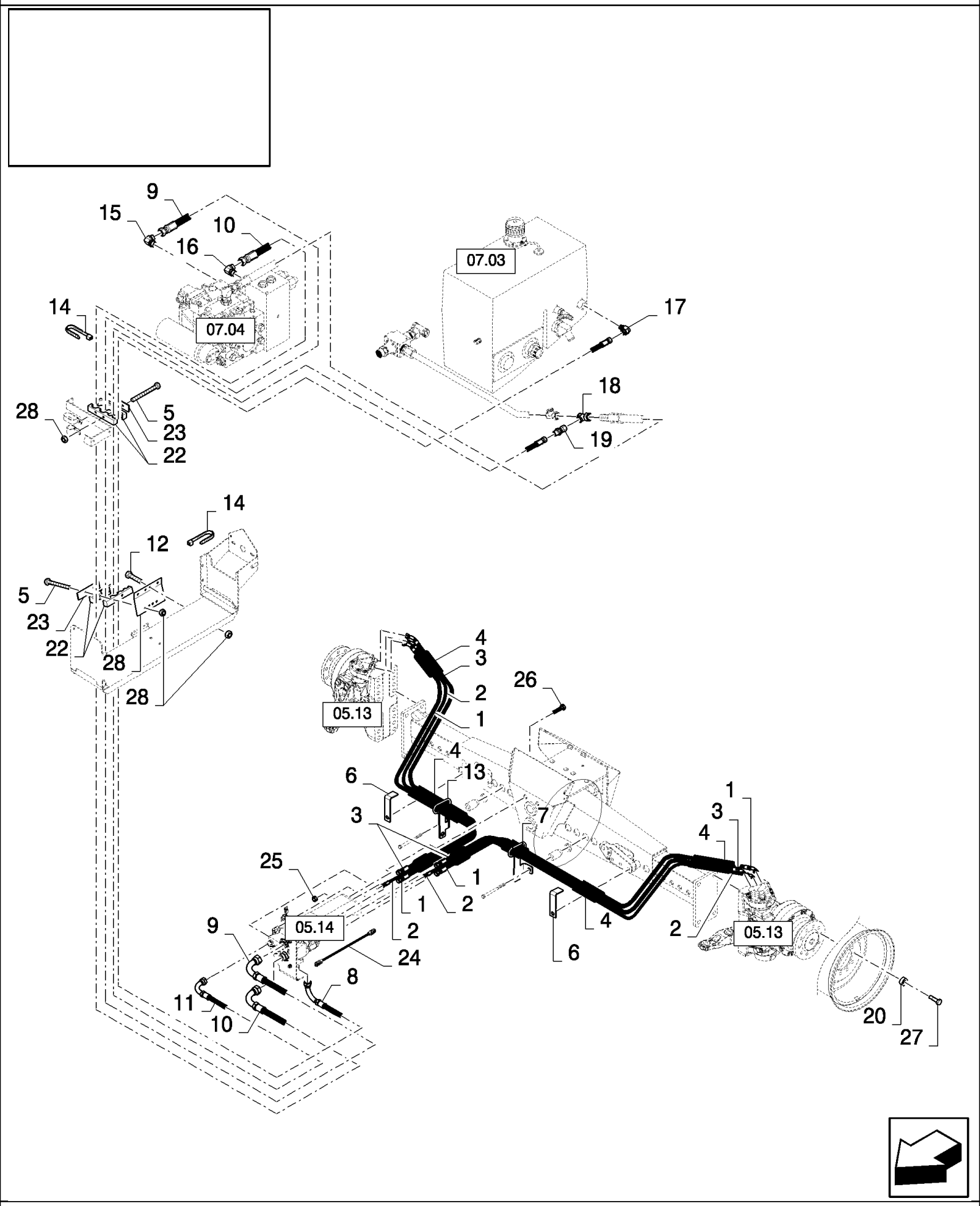
9
15
10
16
07.03
14
07.04
17
18
28
5
23
22
19
14
12
5
23
22
28
28
4
3
2
26
05.13
1
4
13
6
1
3
7
3
4
25
1
1
2
9
05.14
2
4
2
05.13
24
6
8
11
10
20
27

CX880 COMBINE - BASE UNIT (2/01-)

05.12(01) POWERED REAR AXLE, PRA2 - D364

ссылка	Номер детали	Кол-во	Описание
1	87281008	2	HOSE, FLEXIBLE,
2	87281009	2	HOSE, FLEXIBLE,
3	87281007	2	HOSE, FLEXIBLE,
4	84800193	2	BEARING, NYLON,
5	86508569	4	BOLT, Hex, M6 x 70, 8.8, M6x70
6	87281646	2	BRACKET,
7	87281645	1	GUIDE, LH
8	87031127	1	HOSE, LARGE,
9	87011476	1	HOSE ASSY.,
10	87031128	1	HOSE, LARGE,
11	87031126	1	HOSE, LARGE,
12	86977786	2	BOLT, Hex, M6 x 25, 8.8,
13	87283481	1	GUIDE,
14	86566990	28	STRAP, CABLE,
15	9846848	1	ELBOW,
16	9846956	1	ELBOW, 90є, 1 7/16"-12 x 1 1/16"-12, Adj, ORFS,
17	86579697	1	ELBOW, 90є, 1 3/16"-12 ORFS x M27 x 2 ORB,
18	9507672	1	CONNECTION, 3 WAY,
19	84449720	1	FITTING,
20	87281709	20	SPACER,
21	84433892	1	BRACKET,
22	87031121	4	CLAMP, HOSE,
23	84807572	2	CLAMP,
24	84807867	1	HARNESS, WIRE,
25	280375	2	NUT, LOCK, 3/4"-10, GC,
26	281074	2	BOLT, Hex, 3/4"-10 x 2 1/2", G8,
27	87035472	20	BOLT, SPECIAL, M20
28	412152	6	NUT, LOCK, M6 x 1, Cl 8.8,

05.13(01) POWERED REAR AXLE : WHEEL DRIVE, PRA2 - D364

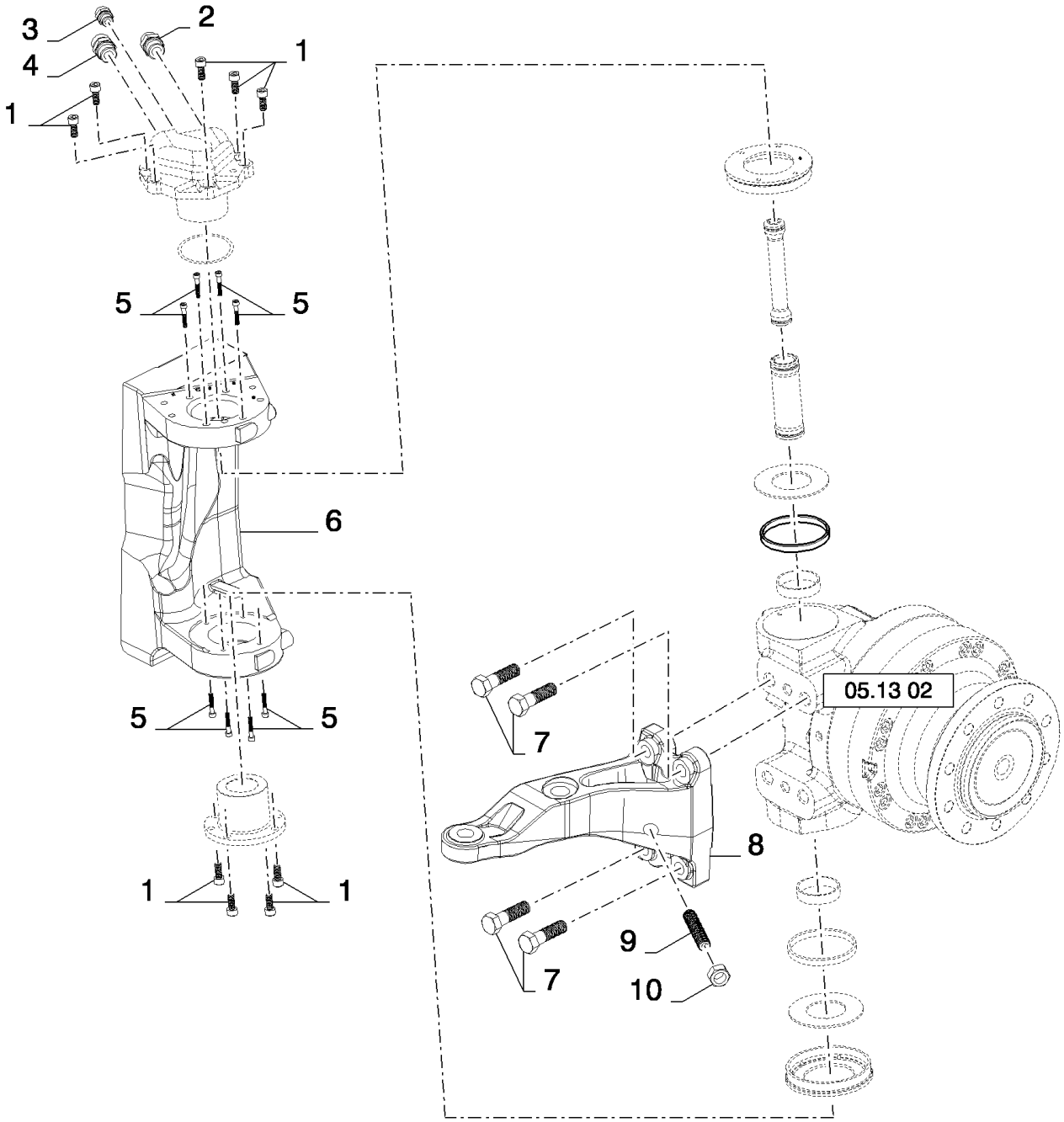

CX880 COMBINE - BASE UNIT (2/01-)

05.13(01) POWERED REAR AXLE : WHEEL DRIVE, PRA2 - D364

ссылка	Номер детали	Кол-во	Описание
1	86508097	18	SCREW, Hex Soc Hd, M10 x 25, 12.9,
2	86579682	2	CONNECTOR, HYD., 1 3/16"-12 ORFS x M27 x 2 ORB,
3	86579676	2	CONNECTOR, HYD., 13/16"-16 ORFS x M18 x 1.5 ORB,
4	86597760	2	CONNECTOR, HYD., 1"-14 ORFS x M27 x 2 ORB,
5	9515561	16	SCREW, Hex Soc Hd, M6 x 35, 12.9,
6	87281647	1	FRAME, LH
6	87281648	1	FRAME, RH
7	412641	8	BOLT, Hex, M20 x 70, 10.9,
8	87281649	1	BRACKET, LH
8	87281650	1	BRACKET, RH
9	87035487	2	SET SCREW, Hex Soc, M20 x 100, Flat Pt,
10	9847024	2	NUT, M20, Cl 10,

05.13(02) POWERED REAR AXLE : WHEEL MOTOR

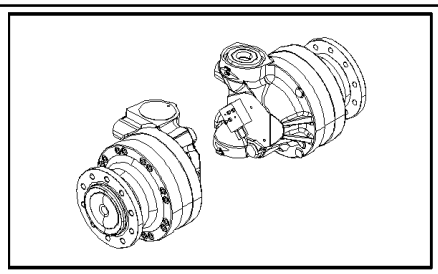

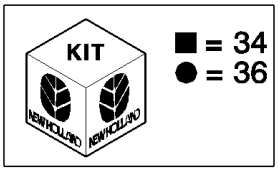

■ = 34
● = 36

32
31
30
29
05.13
28
27
26
25
24
23
22
21
20
19
18
17
16
15
14
13
12
11
10
9
8
7
6
5
4
3
2
1
39
37
35
38
33
05.13

CX880 COMBINE - BASE UNIT (2/01-)

05.13(02) POWERED REAR AXLE : WHEEL MOTOR

ссылка	Номер детали	Кол-во	Описание
1	NSS	1	NOT SERVICED SEPARATELY,
2	NSS	1	NOT SERVICED SEPARATELY,
3	NSS	1	NOT SERVICED SEPARATELY,
4	NSS	1	NOT SERVICED SEPARATELY,
5	NSS	16	NOT SERVICED SEPARATELY,
6	NSS	1	NOT SERVICED SEPARATELY,
7	NSS	1	NOT SERVICED SEPARATELY,
8	NSS	1	NOT SERVICED SEPARATELY,
9	NSS	1	NOT SERVICED SEPARATELY,
10	NSS	8	NOT SERVICED SEPARATELY,
11	NSS	1	NOT SERVICED SEPARATELY,
12	NSS	1	NOT SERVICED SEPARATELY,
13	NSS	1	NOT SERVICED SEPARATELY,
14	NSS	12	NOT SERVICED SEPARATELY,
15	NSS	1	NOT SERVICED SEPARATELY,
16	87281727	3	WASHER,
17	87035490	3	SCREW, Hex Soc Hd, M8 x 10, 8.8,
18	87415	2	NIPPLE, LUBE, 90є, 1/4" NPT x .75" lg, Drive,
19	NSS	1	NOT SERVICED SEPARATELY,
20	NSS	1	NOT SERVICED SEPARATELY,
21	NSS	1	NOT SERVICED SEPARATELY,
22	NSS	1	NOT SERVICED SEPARATELY,
23	NSS	1	NOT SERVICED SEPARATELY,
24	84817916	2	BUSHING,
25	84817926	2	SEALRING,
26	84817900	2	WASHER, THRUST,
27	84800212	1	KIT, SEALS,
28	84800213	1	KIT, SEALS,
29	84817924	2	COVER,
30	84817917	1	SEALRING,
31	87281730	1	PIN,
32	NSS	1	NOT SERVICED SEPARATELY,
33	84800194	1	PIN,
34	87360505	1	KIT, SEALS,
35	87281713	1	HYDRAULIC CYLINDER, (36,37)
36	NSS	1	NOT SERVICED SEPARATELY,
37	NSS	1	NOT SERVICED SEPARATELY,
38	87281652	1	MOTOR, HYDRAULIC, LH (1 to 37, 39)
38	87281653	1	MOTOR, HYDRAULIC, RH (1 to 37, 39)
39	87552816	1	KIT, REPAIR,

05.14(01) POWERED REAR AXLE : VALVE, PRA2 - D364

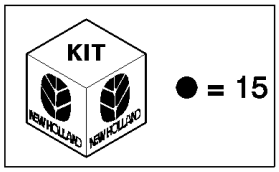

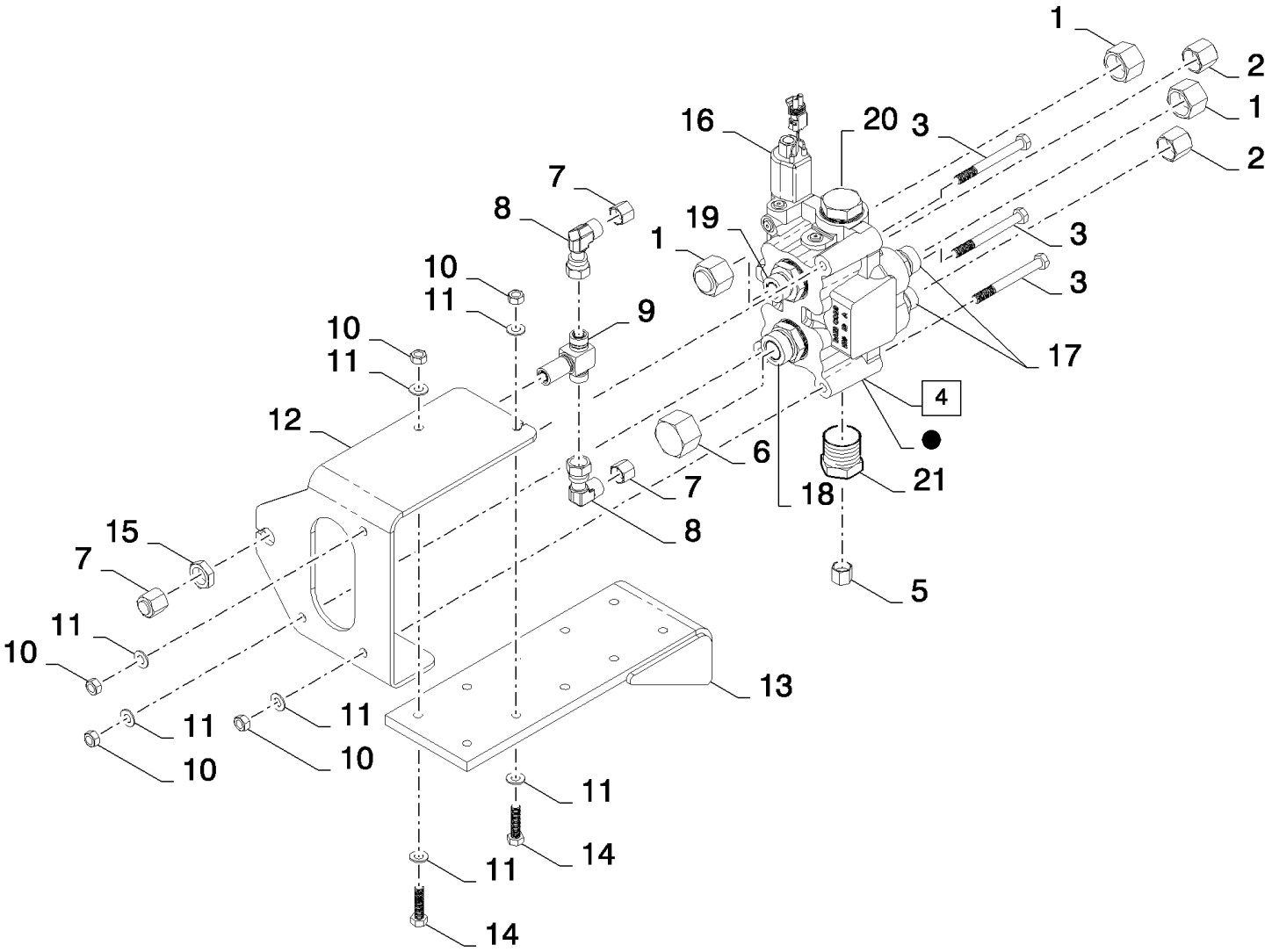

CX880 COMBINE - BASE UNIT (2/01-)

05.14(01) POWERED REAR AXLE : VALVE, PRA2 - D364

ссылка	Номер детали	Кол-во	Описание
1	NS	3	NOT SERVICED,
2	NS	2	NOT SERVICED,
3	43253	3	BOLT, Hex, M10 x 100, 10.9,
4	84800289	1	VALVE, (15 to 21)
5	NS	1	NOT SERVICED,
6	NS	1	NOT SERVICED,
7	NS	3	NOT SERVICED,
8	84989383	2	ELBOW, 90є, 13/16"-16 ORFS x 13/16"-16 Fem Sw,
9	86639082	1	TEE, 13/16"-16 ORFS, Blkhd Br,
10	412141	5	NUT, LOCK, M10 x 1.5, Cl 8,
11	140017	7	WASHER, M10 x 20 x 2,
12	87281651	1	BRACKET,
13	87283402	1	VALVE, BRAKE,
14	43248	2	BOLT, Hex, M10 x 40, 10.9, Full Thd,
15	86509023	1	KIT, SEALS,
16	87283663	1	SOLENOID,
16	87281710	1	VALVE, SOLENOID,
17	87283482	2	REGULATOR, REV
17	87283385	2	REGULATOR, FWD
18	86580179	1	CONNECTOR, HYD., 1 7/16"-12 ORFS x M22 x 2 ORB,
19	86579683	1	CONNECTOR, HYD., 1 3/16"-12 ORFS x M33 x 2 ORB,
20	87013333	1	PLUG, M33 x 2, ORB,
21	87281712	1	CONNECTOR, HYD.,

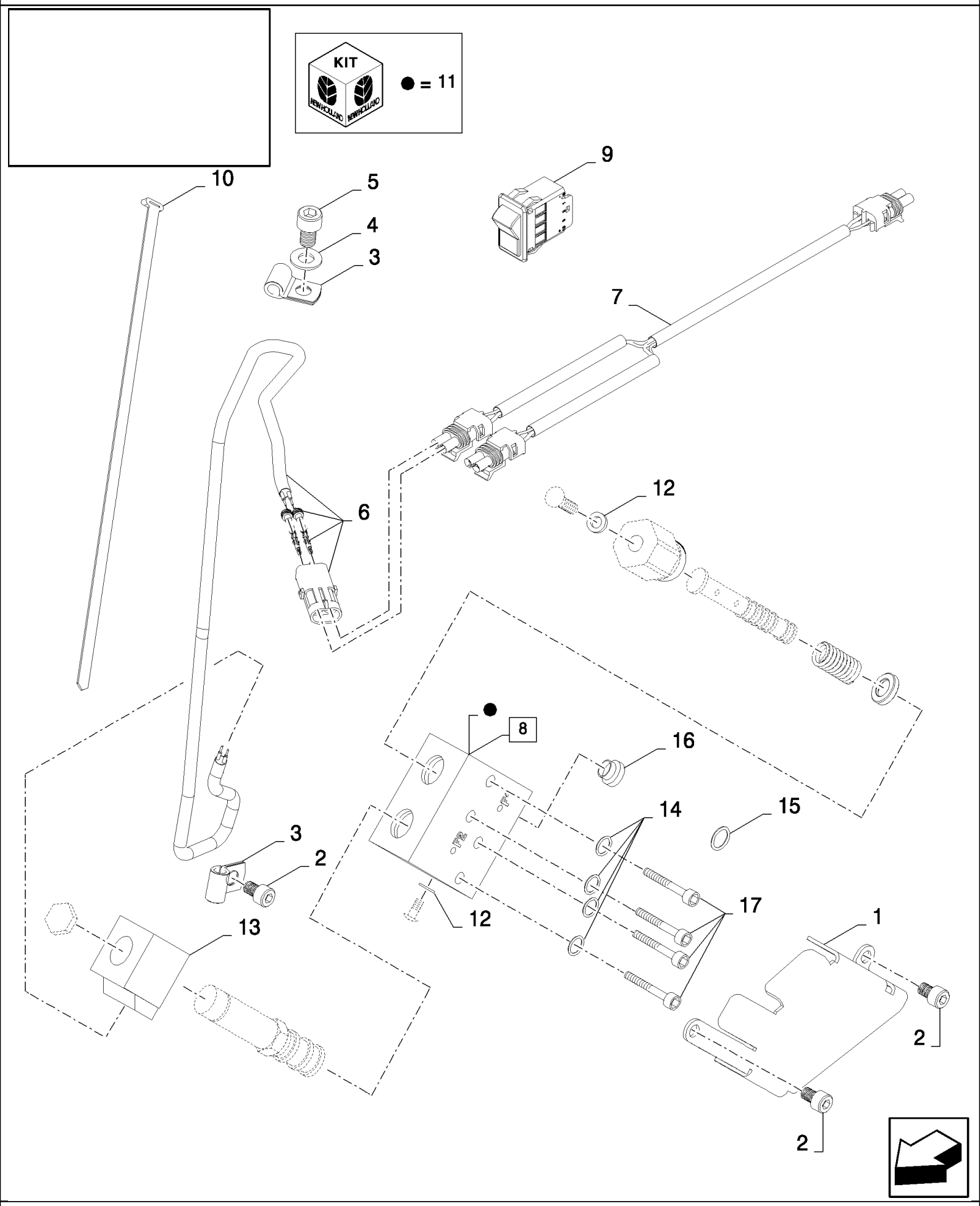
KIT
NEW HOLLAND
NEW HOLLAND
● = 11
10
5
4
3
9
7
6
12
8
16
14
15
3
2
13
12
17
1
2
2

CX880 COMBINE - BASE UNIT (2/01-)

05.15(01) DUAL SPEED, PRA2 - D364

ссылка	Номер детали	Кол-во	Описание
1	87283381	2	SHIELD,
2	2168745	6	SCREW,
3	515-2348	4	CLAMP, 3/16", Insul, 3/8" Bolt,
4	140017	2	WASHER, M10 x 20 x 2,
5	87301307	2	SCREW, Hex Soc Hd, M10 x 16, 12.9,
6	NSS	1	NOT SERVICED SEPARATELY,
7	87283382	1	HARNESS, WIRE,
8	87283383	2	VALVE, (11 to 17)
9	84320238	1	SWITCH,
10	86566989	6	STRAP, CABLE,
11	86509023	1	KIT, SEALS,
12	165212	1	O-RING, -015, 90 Duro, .551" ID x .070" Thk,
13	87283881	1	SOLENOID,
15	87283880	1	CARTRIDGE,
16	590907	1	NUT,
17	87016478	2	SCREW, Hex Soc Hd, M6 x 10, 12.9,
14	9993141	1	O-RING, -012, 90 Duro, .364" ID x .070" Thk,

05.16(01) FIXED STEERING AXLE, HIGH CENTER

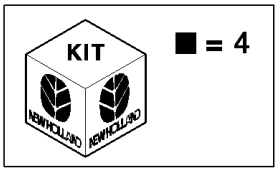

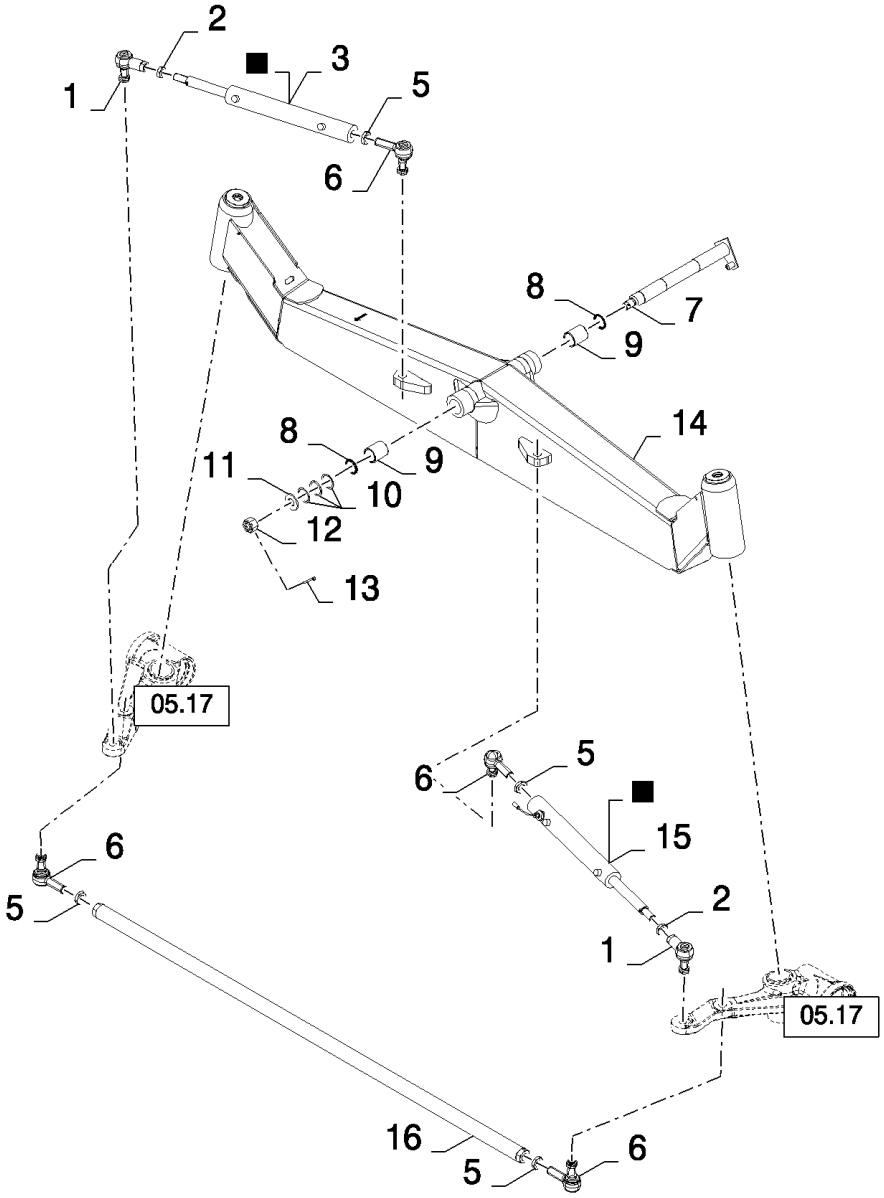

CX880 COMBINE - BASE UNIT (2/01-)

05.16(01) FIXED STEERING AXLE, HIGH CENTER

ссылка	Номер детали	Кол-во	Описание
1	84814042	2	BALL JOINT,
2	80412321	2	NUT, M26x1.5
3	84814043	1	CYLINDER STEERING, (4)
4	84334447	1	KIT, SEALS,
4	84455606	1	KIT, SEALS, , FOR SMART STEER AUTO-GUIDANCE ONLY
5	80100034	4	NUT, M30x1.5
6	84073399	4	BALL JOINT,
7	84074397	1	SHAFT,
8	84069736	2	SEAL,
9	84334438	2	BUSHING,
10	80539450	3	SHIM,
11	80327802	1	WASHER,
12	80390822	1	NUT, M30x1.5
13	80130016	1	PIN, SPLIT (COTTER),
14	84461649	1	AXLE, STEERING, , FOR CX720, CX740, CX760, CX780 ONLY
14	84461651	1	AXLE, STEERING, , FOR CX820, CX840, CX860, CX880 ONLY
15	84814043	1	CYLINDER STEERING, (4)
15	84448270	1	HYDRAULIC CYLINDER, (4), FOR SMART STEER AUTO-GUIDANCE ONLY
16	84461467	1	TUBE, RIGID, , FOR CX720, CX740, CX760, CX780 ONLY
16	84461471	1	TUBE, RIGID, , FOR CX820, CX840, CX860, CX880 ONLY

05.17(01) FIXED STEERING AXLE, HIGH CENTER

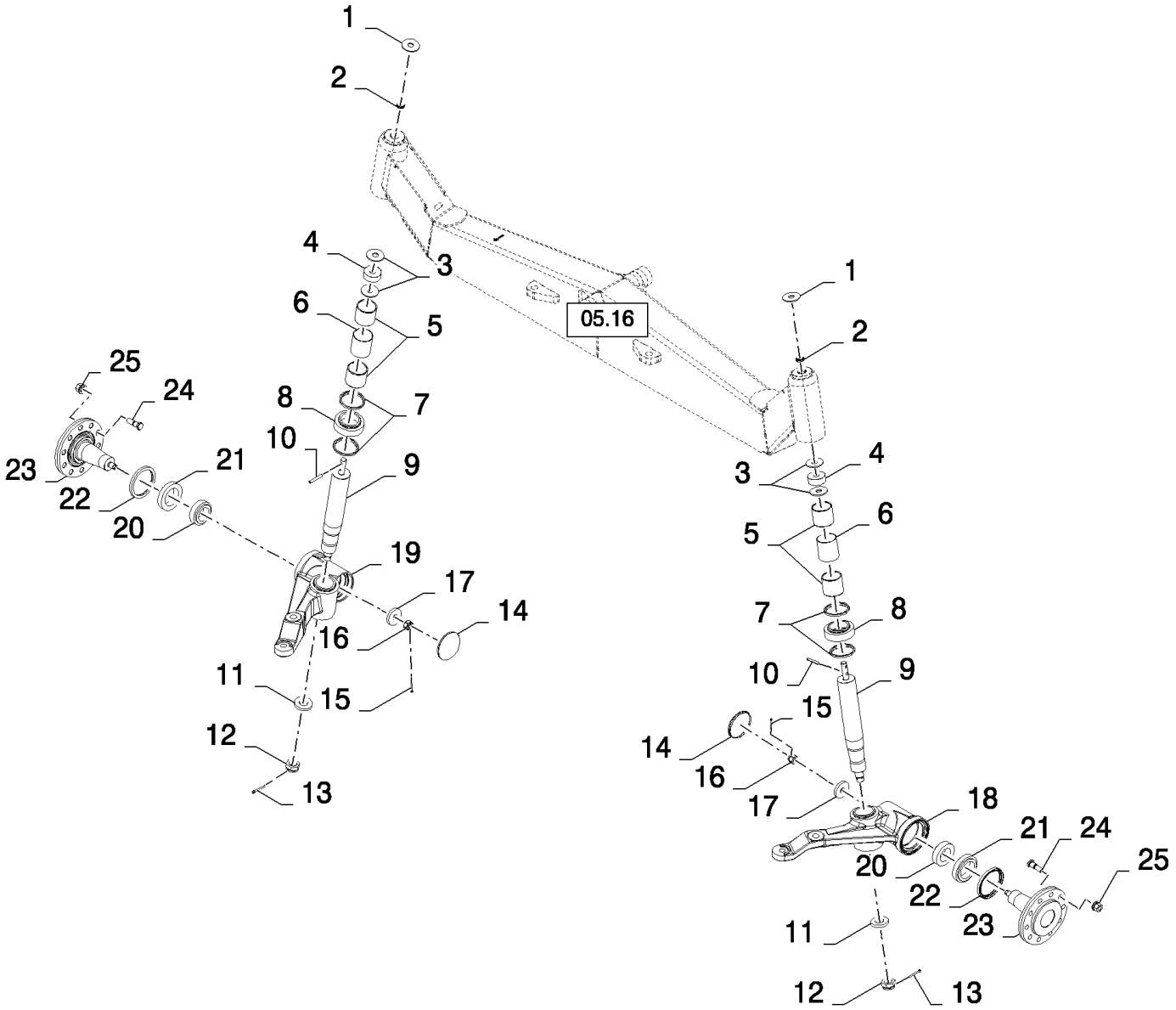

CX880 COMBINE - BASE UNIT (2/01-)

05.17(01) FIXED STEERING AXLE, HIGH CENTER

ссылка	Номер детали	Кол-во	Описание
1	80397068	2	REINFORCEMENT,
2	84801314	2	SEAL, HYD-CYLINDER,
3	84459149	4	DISC,
4	84801317	2	SPACER,
5	84064163	4	BUSHING,
6	87347384	2	INSERT,
7	84801315	4	SEAL, HYD-CYLINDER,
8	84801318	2	SPACER,
9	84801305	2	SHAFT,
10	80062218	2	PIN, SPLIT (COTTER),
11	84462353	2	DISC,
12	80454146	2	NUT, M36x1.5
13	80130016	2	PIN, SPLIT (COTTER),
14	84431059	2	COVER,
15	80130011	2	PIN, SPLIT (COTTER),
16	80309090	2	NUT, SLOTTED, M24x1.5
17	84064952	2	WASHER,
18	84458951	1	SHAFT,
19	84458949	1	SHAFT,
20	84068653	2	BEARING, ROLLER, TAPERED,
21	84068654	2	BEARING ASSY,
22	84454949	2	SEAL,
23	84448564	2	FLANGE,
24	84062510	20	BOLT, M20
25	84062511	20	NUT, M20

ELECTRICAL SYSTEM	**SYSTÈME ELECTRIQUE**	**SISTEMA ELÉCTRICO**	**ELECTRISK SYSTEM**
SISTEMA DI ELETTRICO	**ELEKTRISCHES SYSTEME**	**SISTEMA ELÉCTRICA**	**ELEKTRISCH SYSTEEM**

SEC. 6

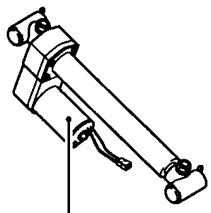

06.39

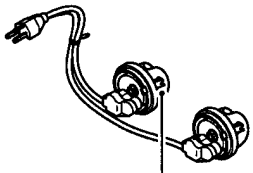

06.49
06.50

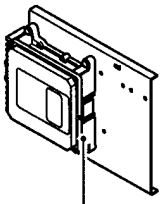

06.51

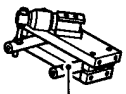

06.13

06.02

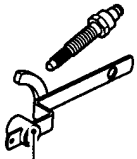

06.31

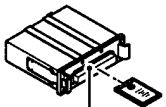

06.09
06.12

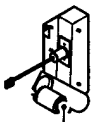

06.14

06.45
06.46

06.17
06.18
06.20
06.21
06.22
06.23
06.24
06.25
06.26
06.28
06.29

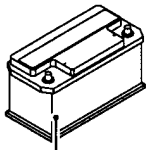

06.52
06.53

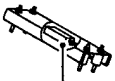

06.43
06.44

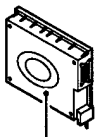

06.11

06.06

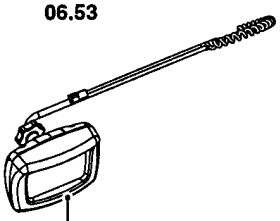

06.05

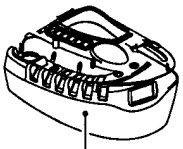

06.03
06.04

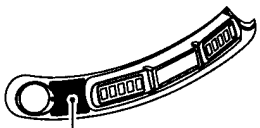

06.07

06.01
06.08
06.19
06.30
06.33
06.37
06.42
06.48
06.54
06.55
06.56

06.36
06.40
06.47

06.32

ссылка	Номер детали	Кол-во	Описание

06.01(01) CAB, MAIN WIRING HARNESS

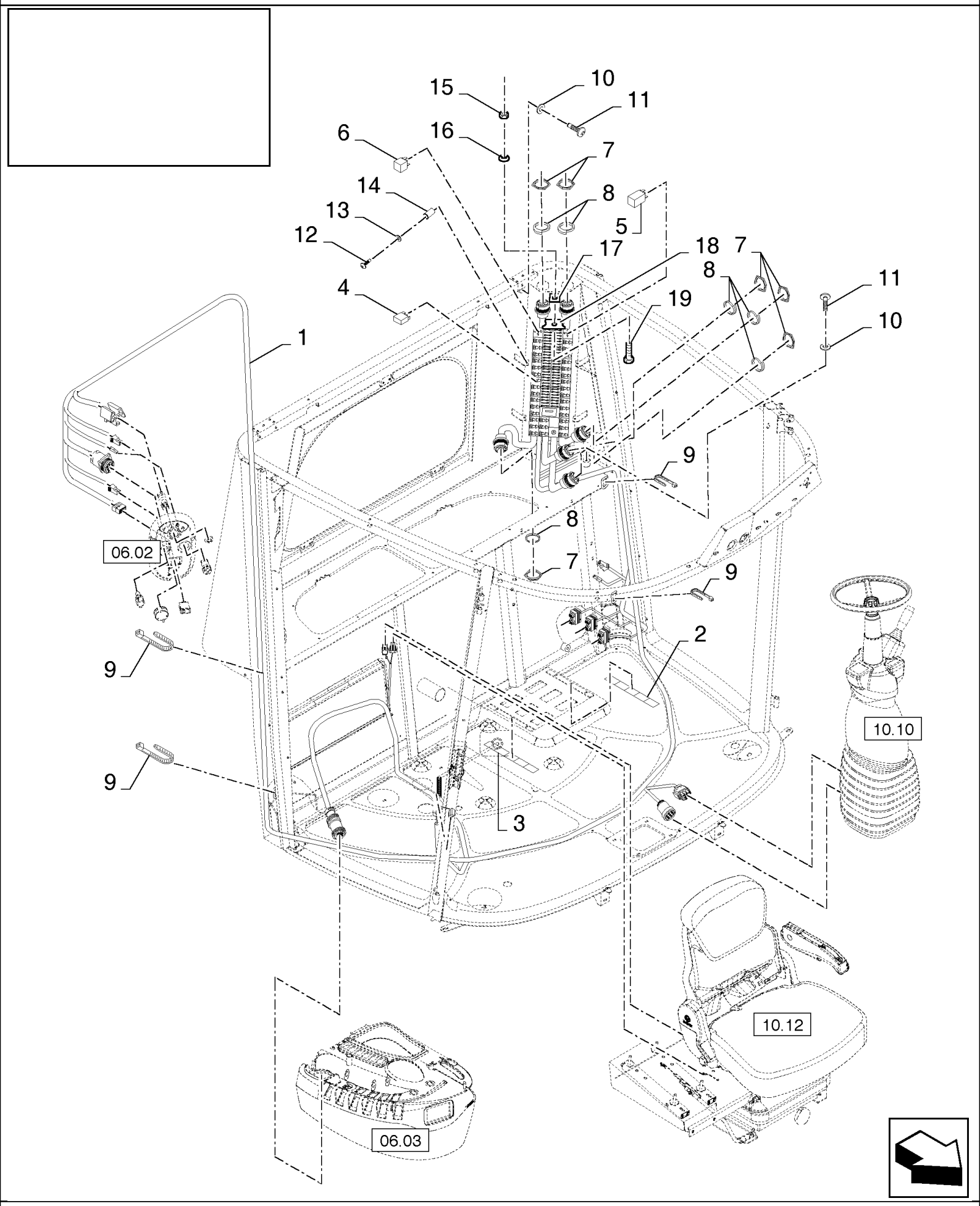

CX880 COMBINE - BASE UNIT (2/01-)

06.01(01) CAB, MAIN WIRING HARNESS

ссылка	Номер детали	Кол-во	Описание
1	86639890	1	HARNESS, WIRE, , BSN C281
1	86900856	1	HARNESS, WIRE, , BSN F282335
1	87019319	1	HARNESS, WIRE, , BSN F336359
1	87032330	1	HARNESS, WIRE, , BSN F360419
1	87045780	1	HARNESS, WIRE, , ASN D420
1	87332649	1	HARNESS, WIRE, , FOR SMART STEER AUTO-GUIDANCE ONLY, ASN D482
2	86611340	1	DECAL,
3	86611339	1	DECAL,
4	86509590	32	RELAY,
5	86633776	1	TIMER,
6	86529089	1	RELAY,
7	86619907	6	NUT,
8	636665	6	WASHER, LOCK,
9	323597	4	STRAP, CABLE, M9 x 165 or M5 x 197,
10	140016	2	WASHER, M8 x 16 x 1.6,
11	120104	2	SCREW, Hex, M8 x 20, 8.8,
12	86511042	4	SCREW, Cross Pan Hd, M4 x 16,
13	89824840	4	WASHER, 4MM
14	84438912	4	INSERT, THREADED,
15	15896221	1	NUT, M6, Cl 10,
16	322357	1	WASHER, SPRING, Belleville, M6,
17	87013665	1	PLATE,
18	87010225	1	PLATE,
19	120100	1	BOLT, Hex, M6 x 20, 8.8,

06.02(01) DASHBOARD

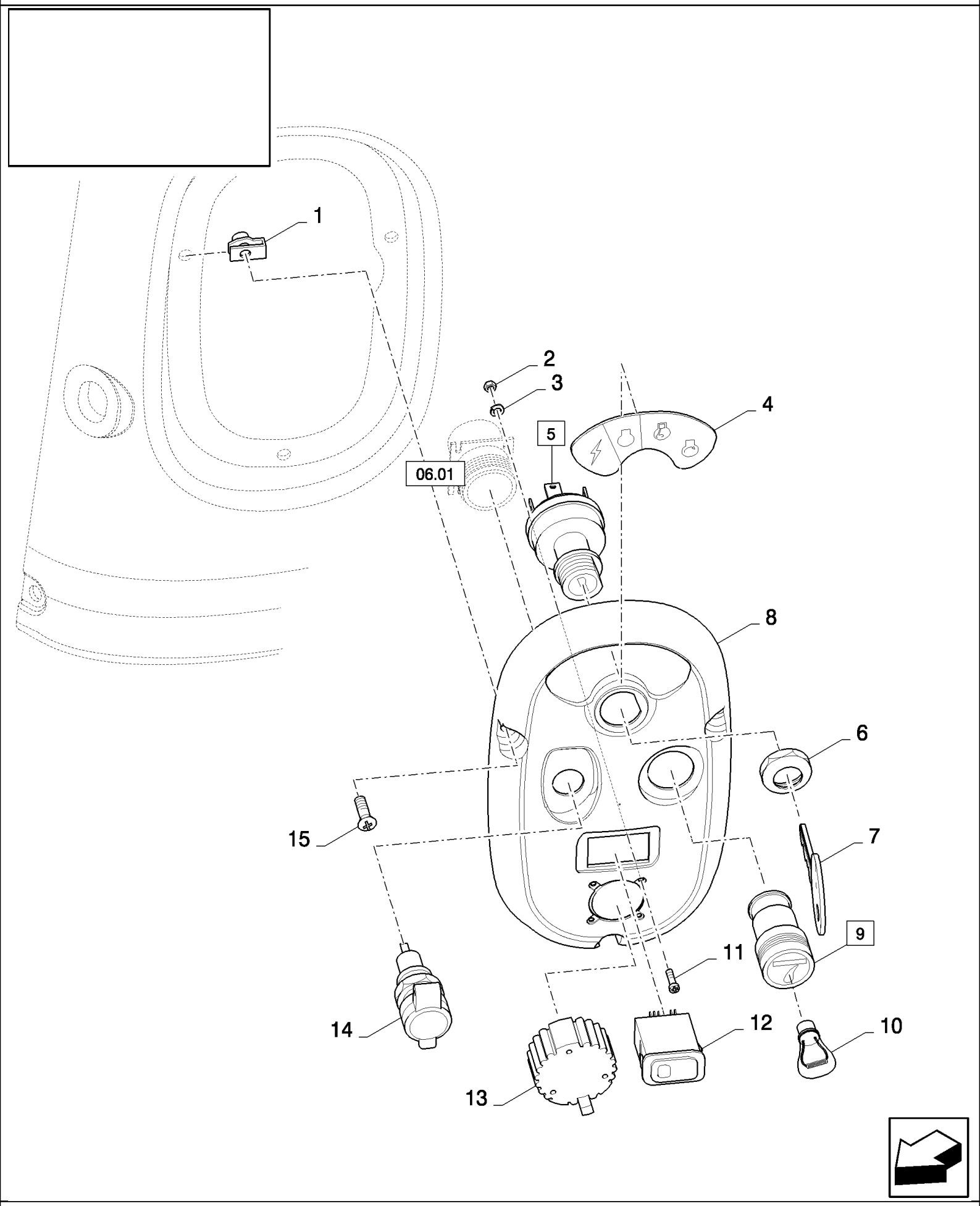

CX880 COMBINE - BASE UNIT (2/01-)

06.02(01) DASHBOARD

ссылка	Номер детали	Кол-во	Описание
1	86014250	3	NUT,
2	86508812	4	NUT, M3, Cl 8,
3	86509827	4	WASHER, LOCK, M3,
4	86533664	1	DECAL, , BSN C407
4	87023988	1	DECAL, , ASN D408
5	86500903	1	SWITCH, IGNITION, (6,7), BSN C407
5	87281750	1	SWITCH, IGNITION, , ASN D408
6	86502200	1	NUT, RING,
7	86502201	1	SET OF 2 KEYS,
8	86528783	1	PANEL, DASH,
9	5148077	1	LIGHTER, CIGARETTE, (10)
10	5148133	1	LIGHTER, CIGARETTE,
11	86511816	4	SCREW, Cross Pan Hd, M3 x 16,
12	84320258	1	LIGHT, INDICATER, COLD START
13	84074633	1	COVER,
14	82002966	1	SOCKET, POWER,
15	86502680	3	SCREW, Cross Oval Hd, M6 x 20,

06.03(01) RIGHT HAND CONSOLE

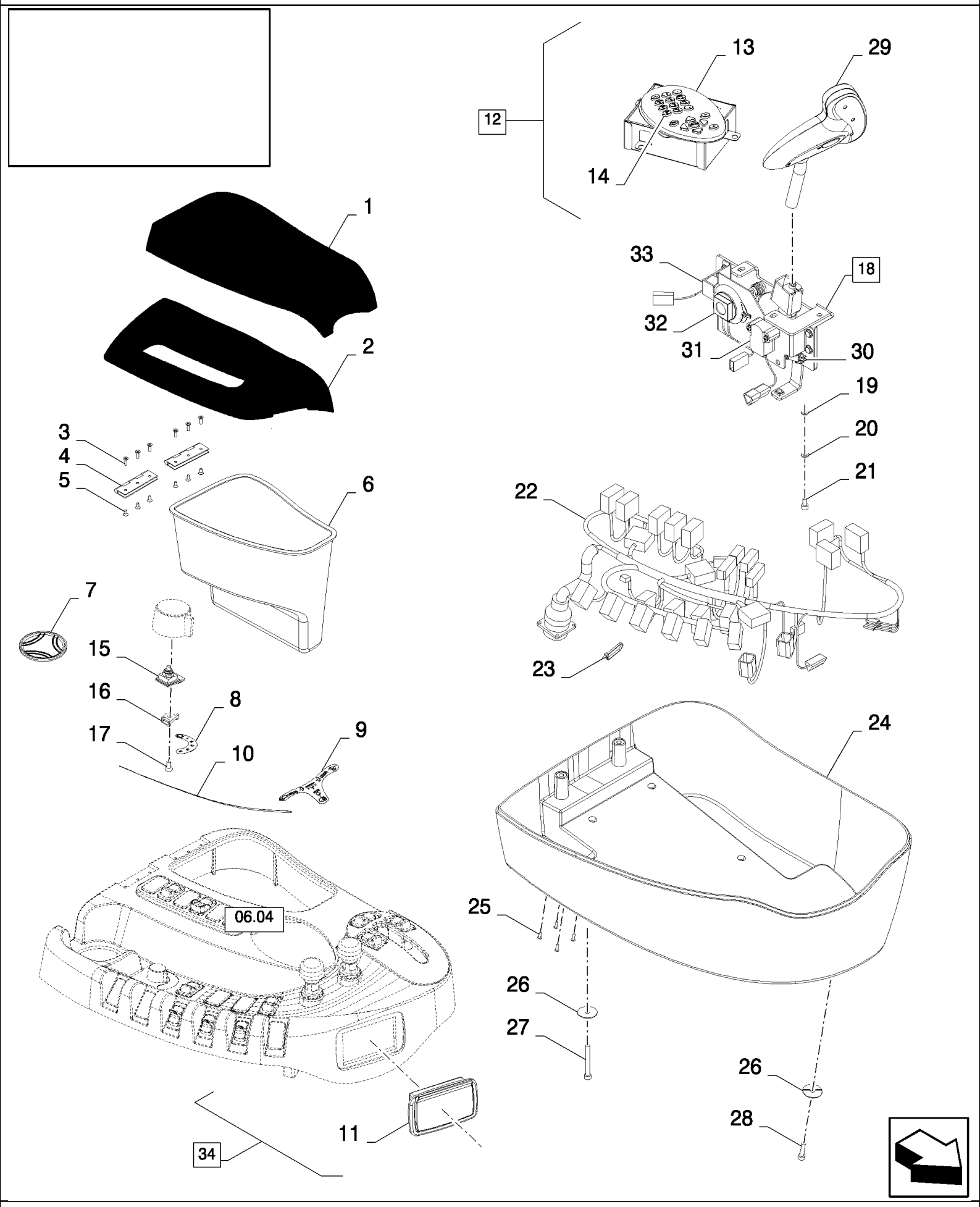

CX880 COMBINE - BASE UNIT (2/01-)

06.03(01) RIGHT HAND CONSOLE

ссылка	Номер детали	Кол-во	Описание
1	84059803	1	ARMREST,
2	84059802	1	ARMREST,
3	NS	6	NOT SERVICED,
4	84069249	2	HINGE,
5	NS	6	NOT SERVICED,
6	86556249	1	BOX,
7	84067900	1	SOFT TRIM,
8	86542092	1	DECAL,
9	86531949	1	DECAL,
10	86552249	1	DECAL,
11	9824826	1	ASH TRAY,
12	86837472	1	ELECTRONIC UNIT, CONTROL, (13, 14), BSN C481
12	87332639	1	ELECTRONIC UNIT, CONTROL, , ASN D482
13	84067908	1	COVER,
14	86606225	1	Keyboard,
15	86525096	1	SWITCH,
16	NS	2	NOT SERVICED,
17	NS	2	NOT SERVICED,
18	86542066	1	HANDLE, (30 to 33), BSN C481
18	87338093	1	HANDLE, (30 to 33), ASN D482
19	NS	6	NOT SERVICED,
20	NS	6	NOT SERVICED,
21	NS	6	NOT SERVICED,
22	86610689	1	HARNESS, WIRE, , BSN C481
22	87332679	1	HARNESS, WIRE, , ASN D482
23	NS	2	NOT SERVICED,
24	84059801	1	HOUSING,
25	NS	4	NOT SERVICED,
26	NS	3	NOT SERVICED,
27	NS	2	NOT SERVICED,
28	NS	1	NOT SERVICED,
29	86528061	1	HANDLE,
30	86643756	1	SWITCH,
31	86590416	1	SENSOR, Potentiometer, BSN C481
31	87045052	1	SENSOR, Potentiometer, ASN D482
32	86998255	1	SPEAKER,
33	87034049	1	SOLENOID,
34	86520835	1	CONSOLE, (1 to 33, 06.04), BSN C481
34	87338303	1	CONSOLE, (1 to 33, 06.04), ASN D482

06.04(01) RIGHT HAND CONSOLE, SWITCHES

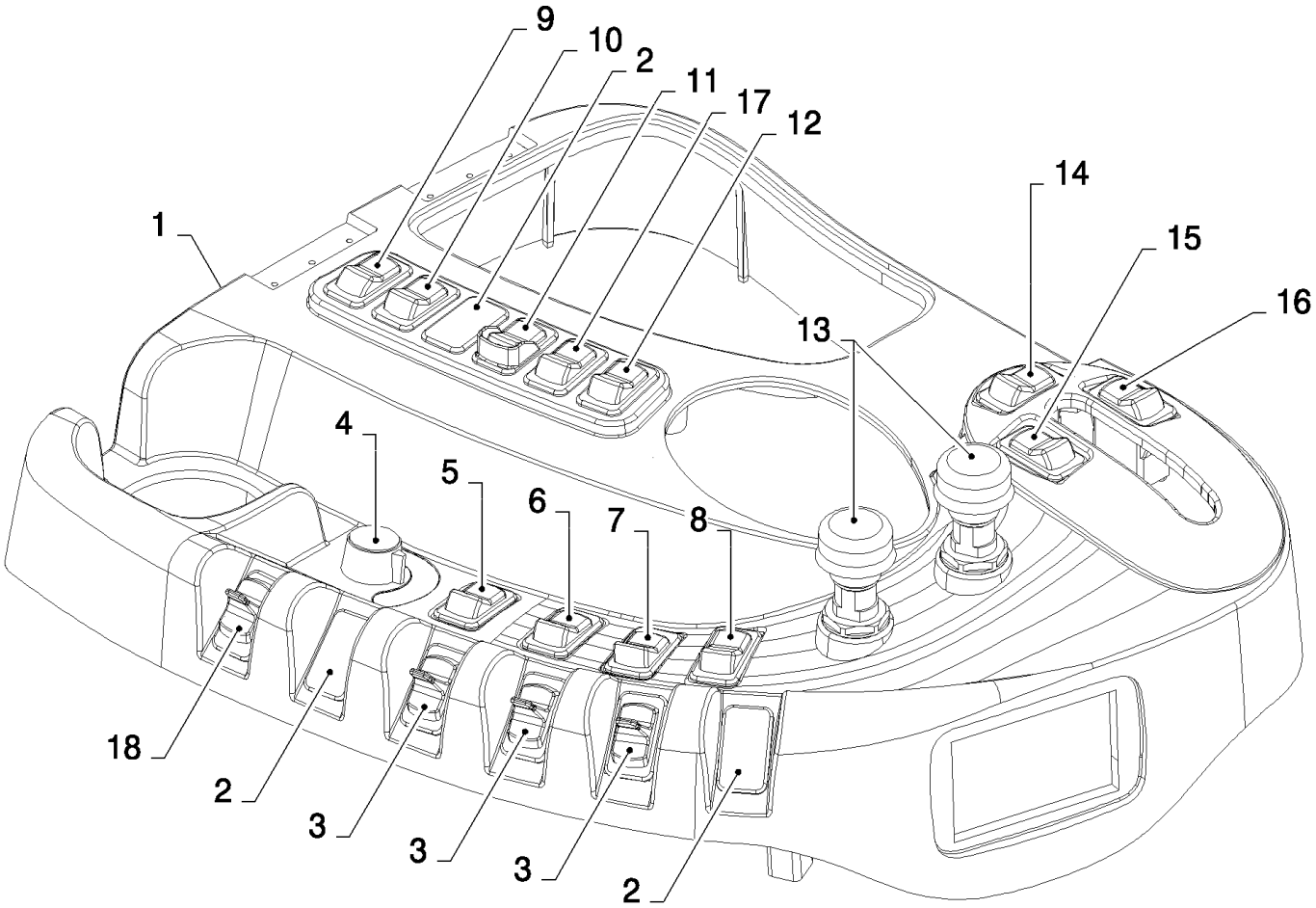

CX880 COMBINE - BASE UNIT (2/01-)

06.04(01) RIGHT HAND CONSOLE, SWITCHES

ссылка	Номер детали	Кол-во	Описание
1	84059800	1	HOUSING,
2	84320263	AR	PLUG,
3	84320233	3	SWITCH,
4	86622310	1	KNOB, GEARSHIFT
5	84320249	1	SWITCH, ON THE ROAD
6	84320238	1	SWITCH, DUAL RANGE SPEED
7	84320236	1	SWITCH, 4 WHEEL DRIVE
8	84320267	1	SWITCH, PARK BRAKE, PARKING BRAKE
9	84320242	1	SWITCH, SPREADERHOOD
10	84320240	1	SWITCH, ALTERNATE SETTINGS
11	84320239	1	SWITCH, REVERSER
12	84320235	1	SWITCH, REEL
13	82014977	2	SWITCH, , BSN C415
13	82027013	2	SWITCH, , ASN D416
14	86643197	1	SWITCH, HEADER WIDTH
15	84320255	1	SWITCH, ENGINE THROTTLE
16	86643196	1	SWITCH, HEADER MEMORY
17	84320251	1	SWITCH, VERTICAL KNIVES
18	84320233	1	SWITCH, LOWER SIEVES

06.05(01) INFO VIEW MONITOR

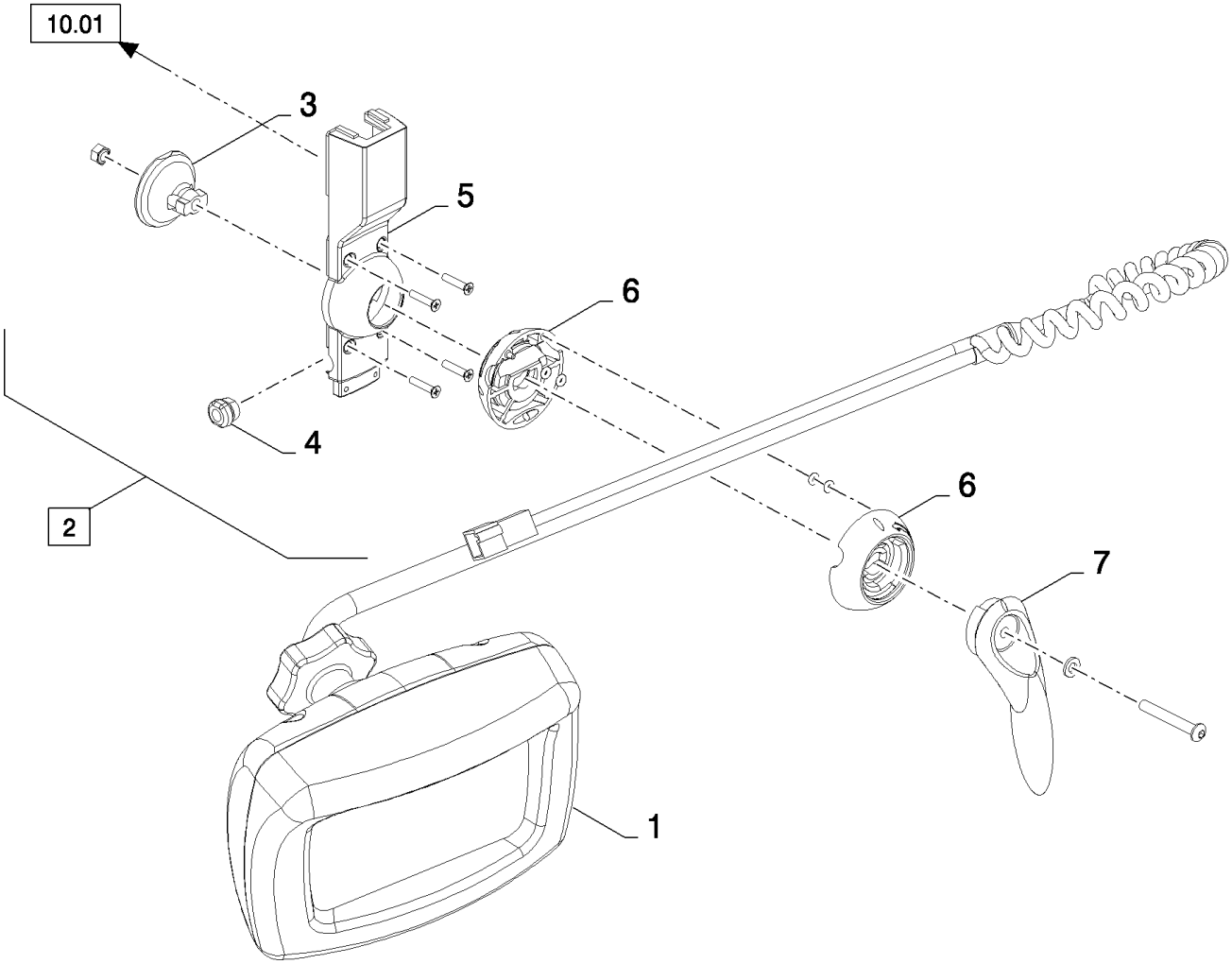

06.05(01) INFO VIEW MONITOR

ссылка	Номер детали	Кол-во	Описание
1	84814886	1	MONITOR, CONTROL, , NO SOFTWARE INSTALLED
2	86606224	1	SWING CARRIAGE, (3 to 7)
3	86606219	1	BRACKET,
4	86626232	1	GROMMET,
5	84061202	1	COVER,
6	86606220	1	BRACKET,
7	86606223	1	HANDLE GRIP,

06.06(01) SHAFT SPEED MONITOR

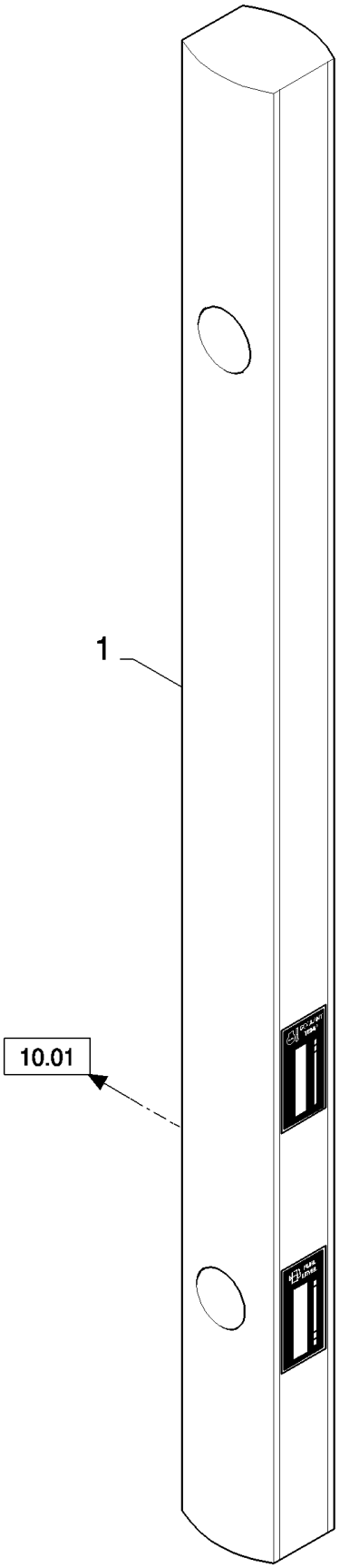

CX880 COMBINE - BASE UNIT (2/01-)

06.06(01) SHAFT SPEED MONITOR

ссылка	Номер детали	Кол-во	Описание
1	86521874	1	MONITOR, CONTROL, , BSN C323
1	87023985	1	MONITOR, CONTROL, , ASN D324

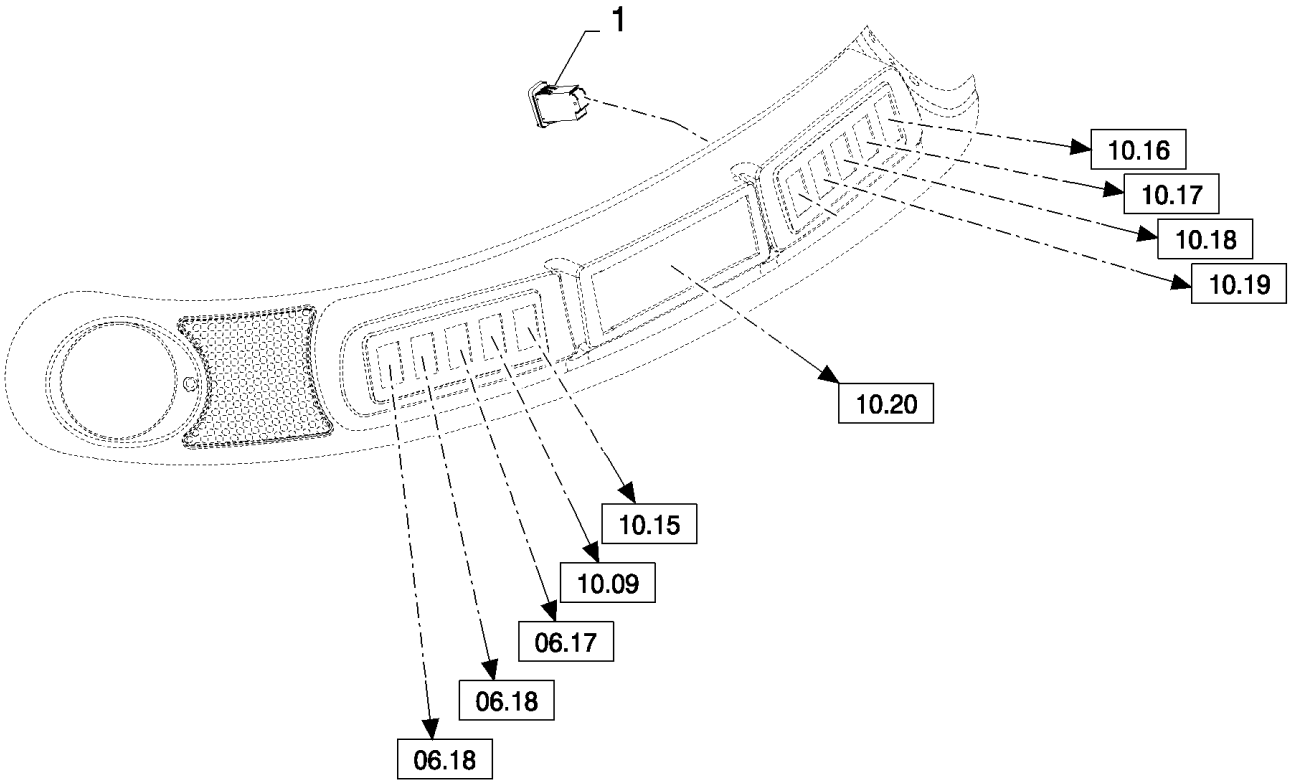
1
10.16
10.17
10.18
10.19
10.20
10.15
10.09
06.17
06.18
06.18

CX880 COMBINE - BASE UNIT (2/01-)

06.07(01) CAB ROOF CONTROLS

ссылка	Номер детали	Кол-во	Описание
1	84320250	1	SWITCH, GRAIN TANK COVERS

06.08(01) CAB ROOF WIRING HARNESS

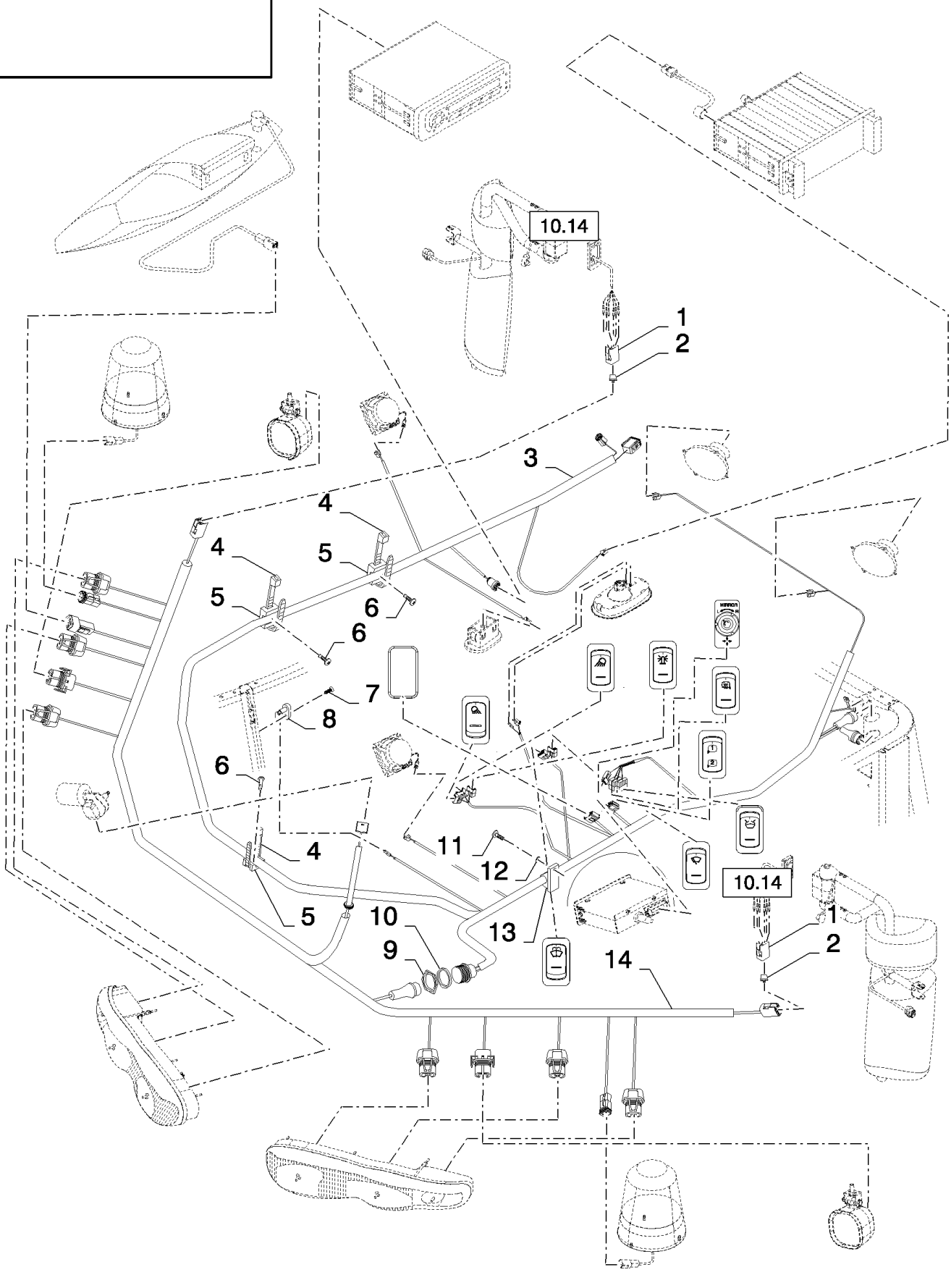

CX880 COMBINE - BASE UNIT (2/01-)

06.08(01) CAB ROOF WIRING HARNESS

ссылка	Номер детали	Кол-во	Описание
1	84074642	2	CONNECTOR, WIRE,
2	89861378	2	PLUG,
3	86639899	1	HARNESS, WIRE, , BSN C281
3	86900857	1	HARNESS, WIRE, , BSN F282357
3	87032331	1	HARNESS, WIRE, , ASN D360
3	87332650	1	HARNESS, WIRE, , FOR SMART STEER AUTO-GUIDANCE ONLY, ASN D482
4	86566989	3	STRAP, CABLE,
5	86590413	3	CLAMP,
6	412475	3	SCREW, M4x16
7	9835804	1	SCREW,
8	83961521	1	SWITCH,
9	86619907	1	NUT,
10	636665	1	WASHER, LOCK,
11	84073086	1	SCREW, M6x20
12	84007539	1	WASHER,
13	701318	1	CLAMP,
14	86639900	1	HARNESS, WIRE, , BSN C281
14	86900863	1	HARNESS, WIRE, , BSN F282357
14	87032333	1	HARNESS, WIRE, , ASN D360

06.09(01) DATA LOGGER

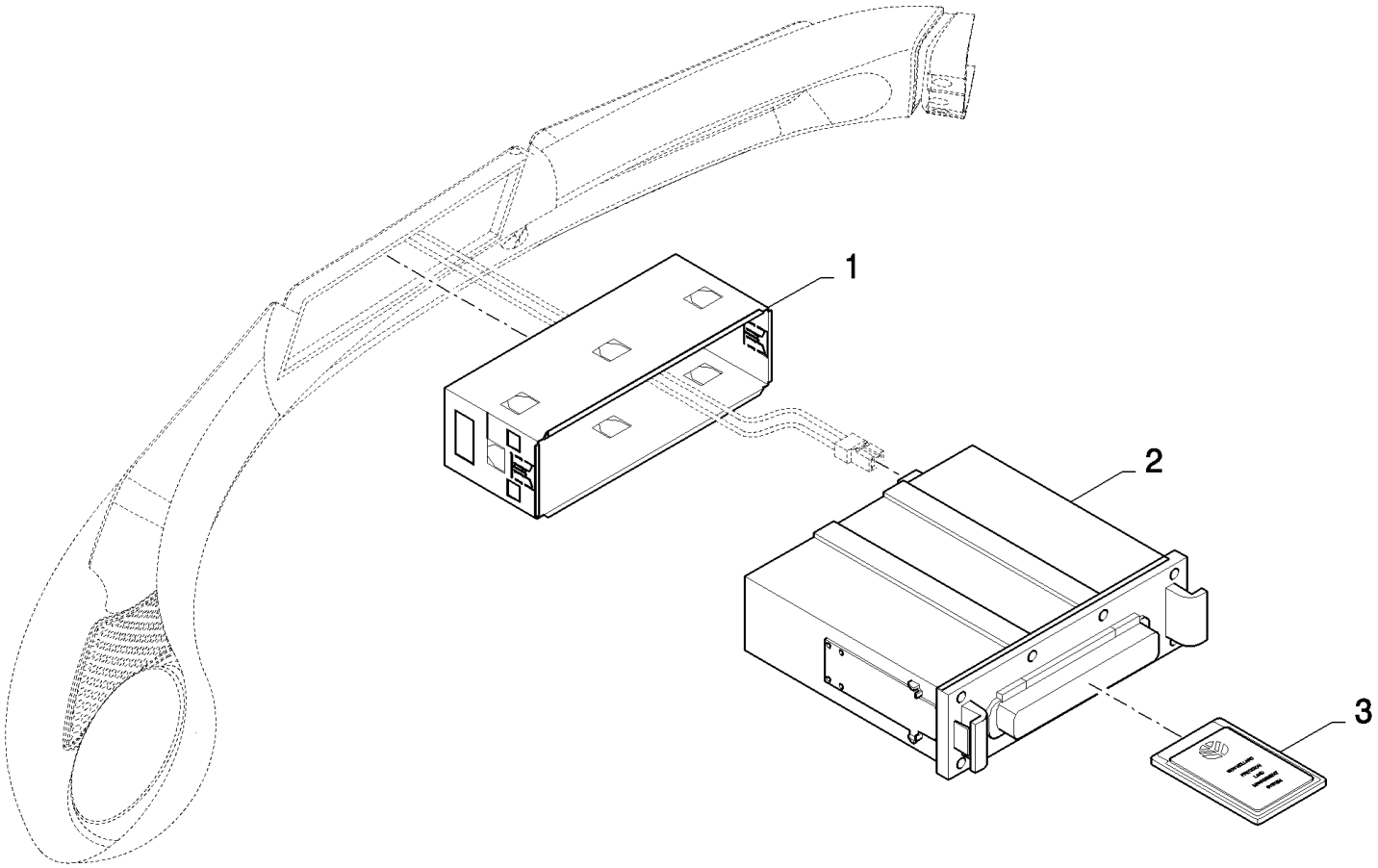

CX880 COMBINE - BASE UNIT (2/01-)

06.09(01) DATA LOGGER

ссылка	Номер детали	Кол-во	Описание
1	84100357	1	CAPPING, , BSN C257
1	84334445	1	SLEEVE, , ASN D258
2	84070332	1	ELECTRONIC UNIT, CONTROL, , BSN C481
2	87359290	1	ELECTRONIC UNIT, CONTROL, , ASN D482
3	86624645	1	ELECTRONIC UNIT, CONTROL, , BSN C407
3	86976851	1	SOFTWARE, 32MB, ASN D408
3	87341265	1	SOFTWARE, 128MB

06.10(01) WIRING HARNESS (PRECISION FARMING)

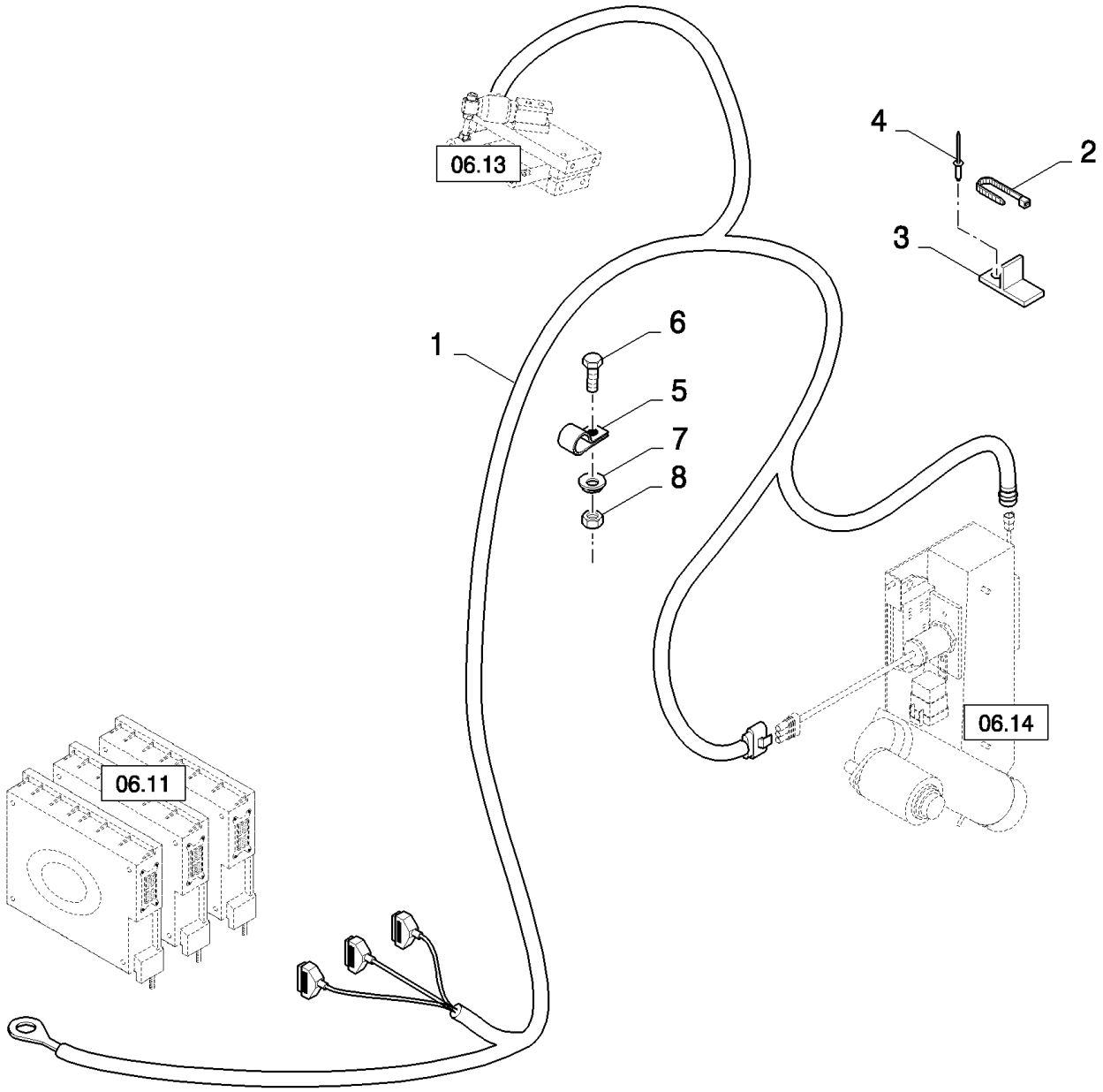

CX880 COMBINE - BASE UNIT (2/01-)

06.10(01) WIRING HARNESS (PRECISION FARMING)

ссылка	Номер детали	Кол-во	Описание
1	86610699	1	HARNESS, WIRE,
1	87332651	1	HARNESS, WIRE, , FOR SMART STEER AUTO-GUIDANCE ONLY
2	86566990	3	STRAP, CABLE,
2	86566989	18	STRAP, CABLE,
3	86590413	4	CLAMP,
4	445394	4	RIVET, Pop, M4.8 x 12.7,
5	9827902	12	CLAMP, 1", Insul, 3/8" Bolt,
6	120101	1	BOLT, Hex, M6 x 30, 8.8, Full Thd,
7	322357	2	WASHER, SPRING, Belleville, M6,
8	15896221	1	NUT, M6, Cl 10,

06.11(01) CCM CONTROL MODULE

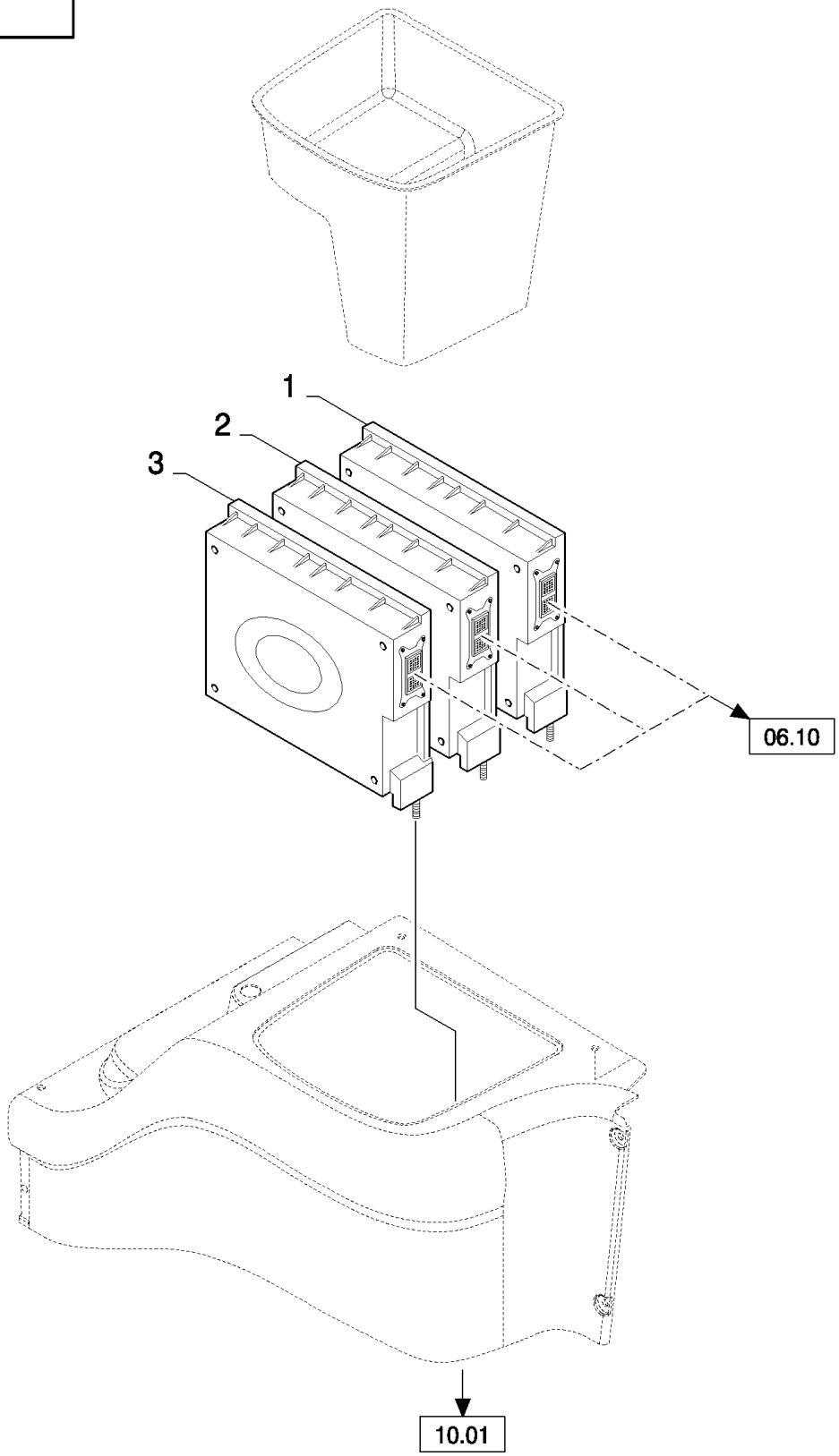

CX880 COMBINE - BASE UNIT (2/01-)

06.11(01) CCM CONTROL MODULE

ссылка	Номер детали	Кол-во	Описание
1	87014401	1	ELECTRONIC UNIT, CONTROL, CCM1, NO SOFTWARE INSTALLED
2	87014401	1	ELECTRONIC UNIT, CONTROL, CCM2, NO SOFTWARE INSTALLED
3	87014401	1	ELECTRONIC UNIT, CONTROL, CCM3, NO SOFTWARE INSTALLED

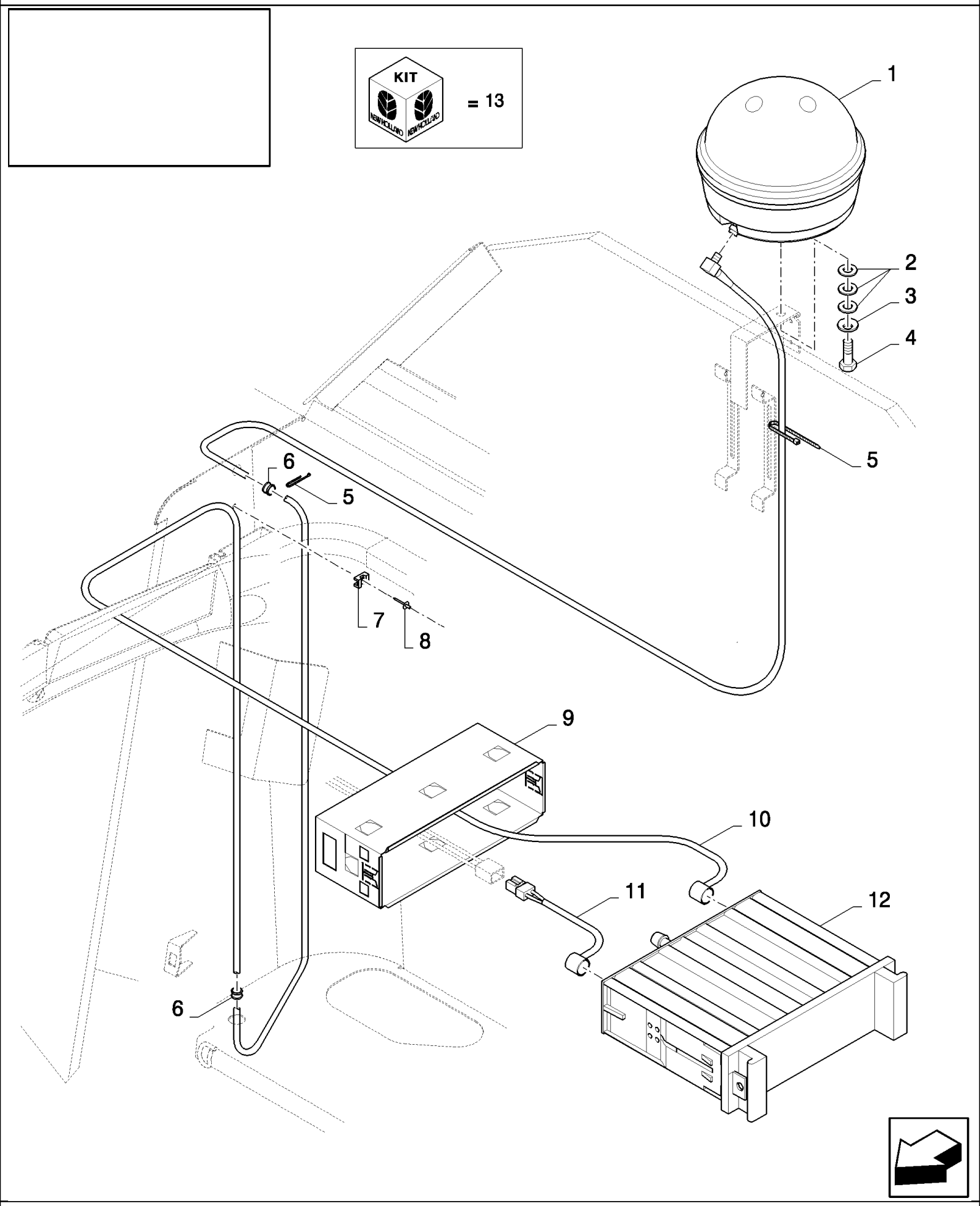
KIT
NEW HOLLAND
NEW HOLLAND
= 13
1
2
3
4
5
6
5
7
8
9
10
11
12
6

CX880 COMBINE - BASE UNIT (2/01-)

06.12(01) GPS

ссылка	Номер детали	Кол-во	Описание
1	84100355	1	ANTENNA, 134
1	87281320	1	ANTENNA, 100, BSN C487
1	87350397	1	ANTENNA, 100, ASN D488
1	87283830	1	ANTENNA, 110, BSN C487
1	87350399	1	ANTENNA, 110, ASN D488
2	140020	3	WASHER, M16 x 30 x 3, , BSN C319
3	140048	1	WASHER, SPRING, Belleville, M16,
4	280319	1	BOLT, Hex, 5/8"-11 x 1 1/4", G5, Full Thd, , BSN C319
4	87106351	1	SCREW, , ASN D320
5	86566989	11	STRAP, CABLE,
6	410963	2	PLUG,
7	86590413	1	CLAMP,
8	445394	1	RIVET, Pop, M4.8 x 12.7,
9	84100357	1	CAPPING, , BSN C335
9	84334445	1	SLEEVE, , ASN D336
10	84432592	1	HARNESS, WIRE,
11	84100358	1	HARNESS, WIRE,
12	84100356	1	ELECTRONIC UNIT, CONTROL,
13	84083275	1	ANTENNA, WAAS/EGNOS, NO SUBCOMPONENTS YET AVAILABLE

06.13(01) GRAIN FLOW YIELD SENSOR

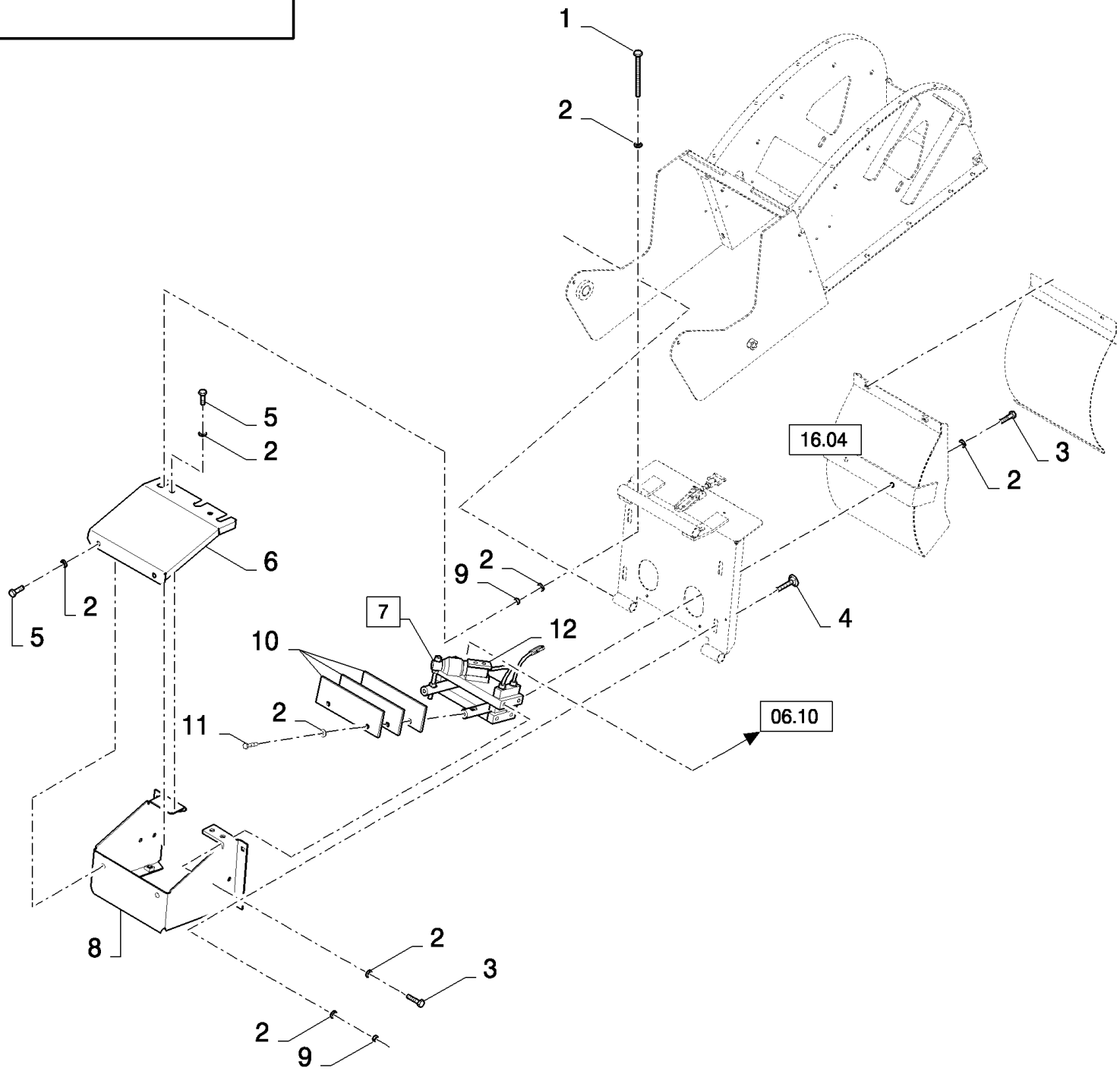

CX880 COMBINE - BASE UNIT (2/01-)

06.13(01) GRAIN FLOW YIELD SENSOR

ссылка	Номер детали	Кол-во	Описание
1	120108	2	BOLT, Hex, M8 x 80, 8.8, Full Thd,
2	322358	18	WASHER, SPRING, Belleville, M8,
3	120104	6	SCREW, Hex, M8 x 20, 8.8,
4	86507486	4	BOLT, CARRIAGE, Short NK, M8 x 20, Cl8.8, Full Thd,
6	84989230	1	COVER, , BSN C347
6	84441669	1	COVER, , ASN D348
7	84989459	1	SENSOR, , BSN C241
7	84444901	1	SENSOR, (12), ASN D242
8	84440842	1	SUPPORT, , BSN C347
8	84441479	1	SUPPORT, , ASN D348
9	89706690	6	NUT, M8, Cl 8,
10	84441678	4	WEIGHT, COUNTER, , BSN C277
10	84442360	3	WEIGHT, COUNTER, , ASN D278
11	386045	2	BOLT, Hex, M8 x 45, 8.8,
12	84448859	1	CONTROL UNIT, , ASN D242
5	16043224	4	BOLT, Hex, M8 x 16, 8.8, Full Thd,

06.14(01) MOISTURE SENSOR

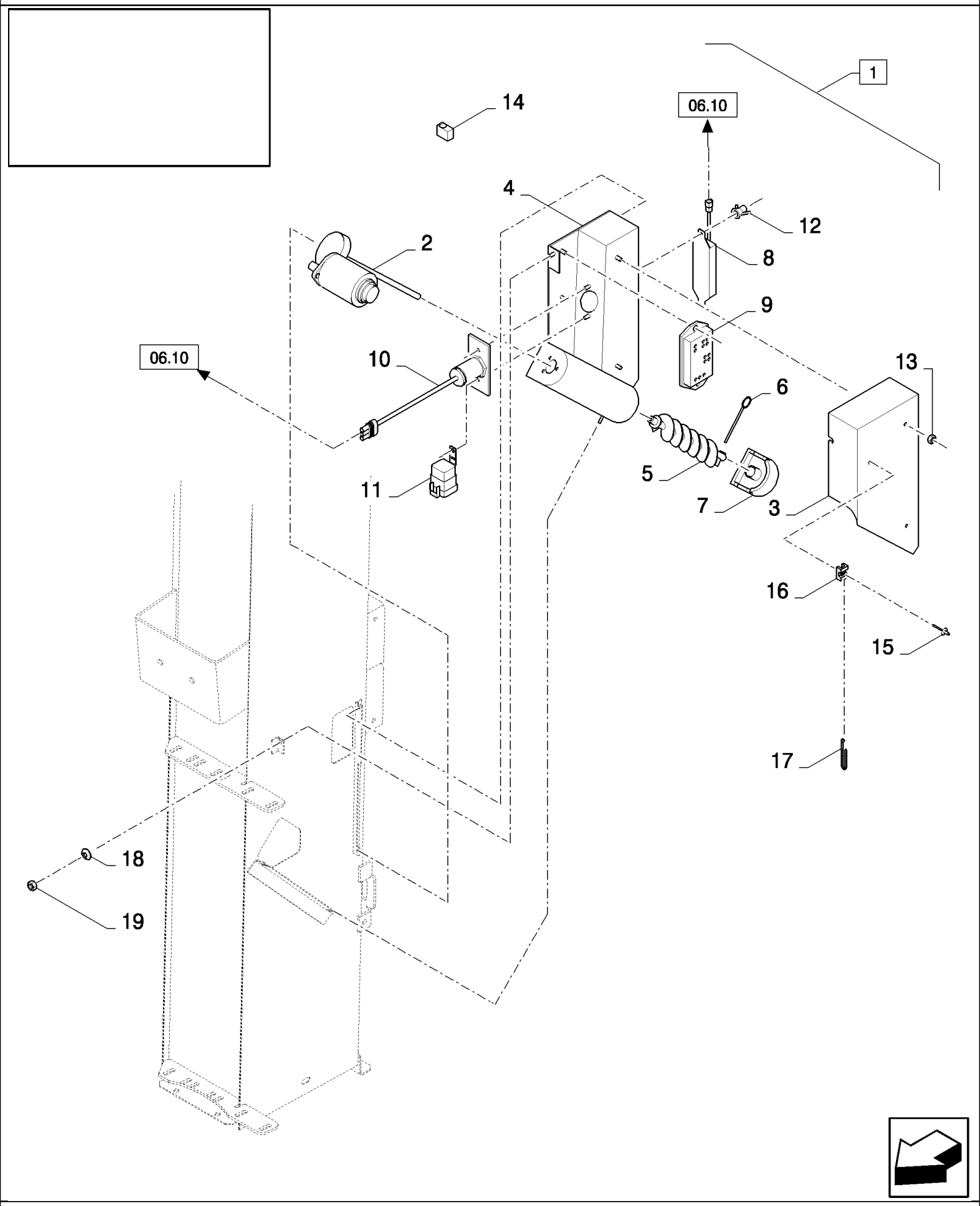

CX880 COMBINE - BASE UNIT (2/01-)

06.14(01) MOISTURE SENSOR

ссылка	Номер детали	Кол-во	Описание
1	84435210	1	SENSOR, (2 to 14)
2	84435827	1	MOTOR, ELECTRIC,
3	84435834	1	COVER,
4	84435325	1	HOUSING,
5	84435828	1	AUGER,
6	84435829	2	PIN,
7	84435830	1	BLOCK,
8	84435324	1	METER, MOISTURE,
9	84435831	1	PRINTED CIRCUIT BOARD,
10	84435833	1	SENSOR,
11	84435874	1	RELAY,
12	84814892	2	NUT, WING, M6 x 1,
13	86512440	7	NUT, LOCK, M6
14	84320044	1	FUSE, 5A
15	445394	1	RIVET, Pop, M4.8 x 12.7,
16	86590413	1	CLAMP,
17	86566989	1	STRAP, CABLE,
18	322357	5	WASHER, SPRING, Belleville, M6,
19	15896221	5	NUT, M6, Cl 10,

06.15(01) ANTENNA - C319

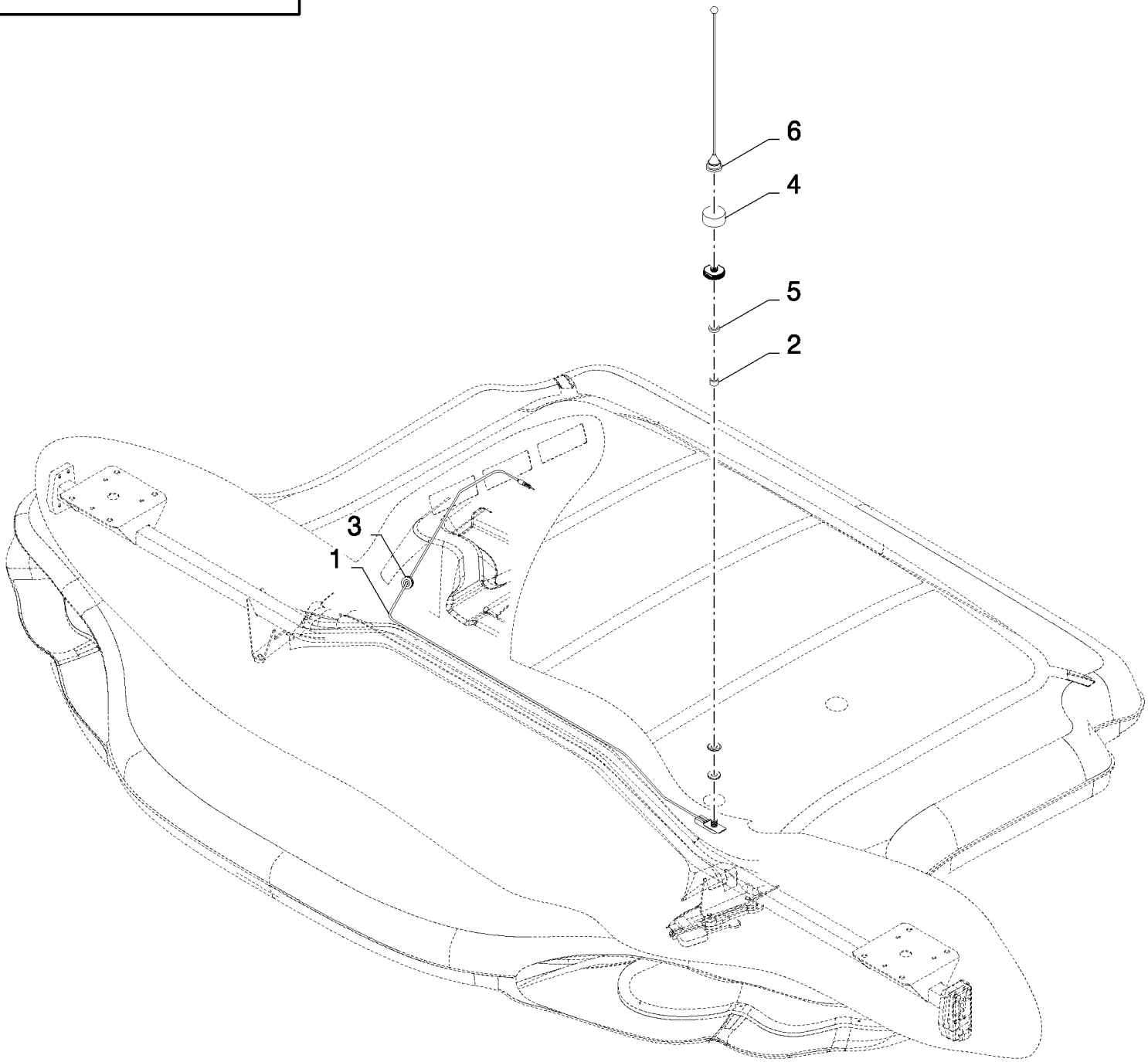

CX880 COMBINE - BASE UNIT (2/01-)

06.15(01) ANTENNA - C319

ссылка	Номер детали	Кол-во	Описание
1	86591733	1	CABLE, ELECTRIC,
2	84076700	1	BUSHING,
3	84607475	1	GROMMET,
4	86591730	1	DUST CAP,
5	86531234	1	WASHER, RUBBER,
6	86591726	1	ANTENNA,

06.16(01) CB CABLE

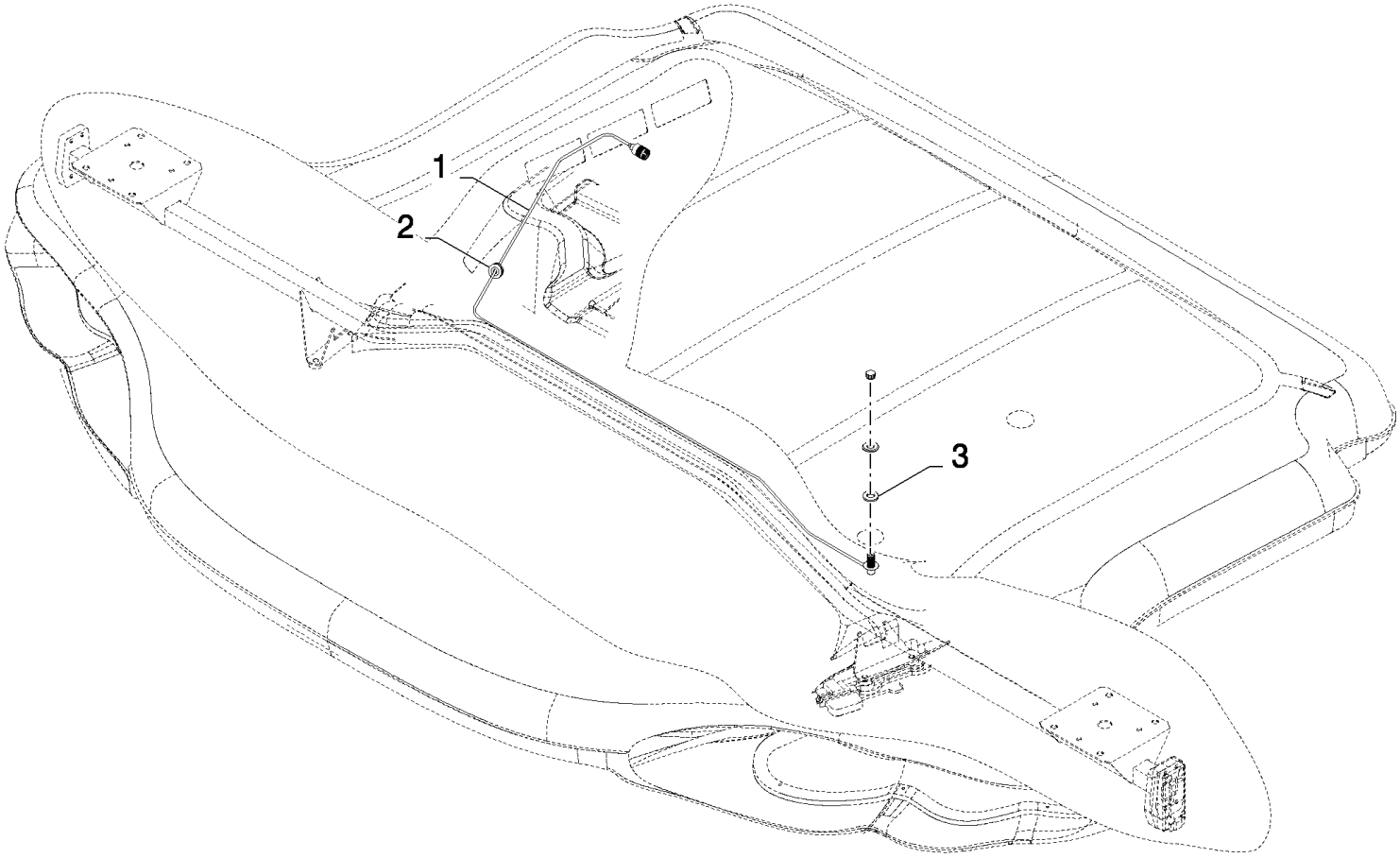

CX880 COMBINE - BASE UNIT (2/01-)

06.16(01) CB CABLE

ссылка	Номер детали	Кол-во	Описание
1	84017502	1	CABLE,
2	84607475	1	GROMMET,
3	86531234	1	WASHER, RUBBER,

06.17(01) BUZZER AND REAR BEACON LIGHT

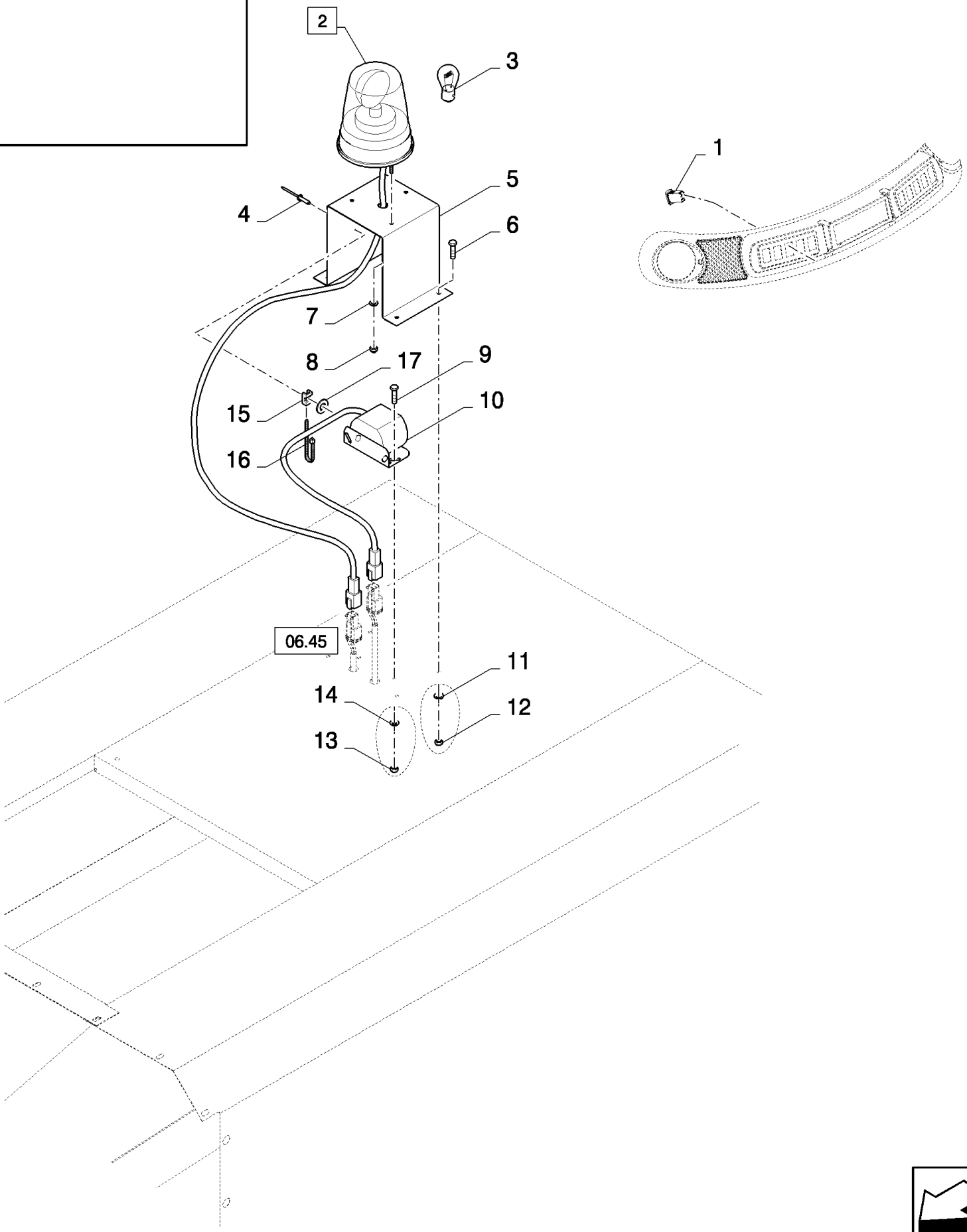

CX880 COMBINE - BASE UNIT (2/01-)

06.17(01) BUZZER AND REAR BEACON LIGHT

ссылка	Номер детали	Кол-во	Описание
1	84320234	1	SWITCH, BEACON, FLASHLIGHT
2	84067911	1	BEACON, (3), BSN C435
2	87050694	1	BEACON, (3), ASN D436
3	86616248	1	BULB, #HI, 55w,
4	445394	1	RIVET, Pop, M4.8 x 12.7,
5	86611337	1	SUPPORT,
6	86508568	4	SCREW, Hex, M6 x 16, 8.8,
7	86588450	3	WASHER, M6,
8	353308	3	NUT, M6 x 1, Cl 8,
9	16043224	2	BOLT, Hex, M8 x 16, 8.8, Full Thd,
10	87010223	1	BUZZER,
11	322357	4	WASHER, SPRING, Belleville, M6,
12	15896221	4	NUT, M6, Cl 10,
13	86629542	2	NUT, LOCK, M8 x 1.25, Cl 8,
14	140016	2	WASHER, M8 x 16 x 1.6,
15	86590413	1	CLAMP,
16	86566989	1	STRAP, CABLE,
17	140014	1	WASHER, M5 x 10 x 1,

06.18(01) CAB ROOF LIGHTS AND ANTENNA

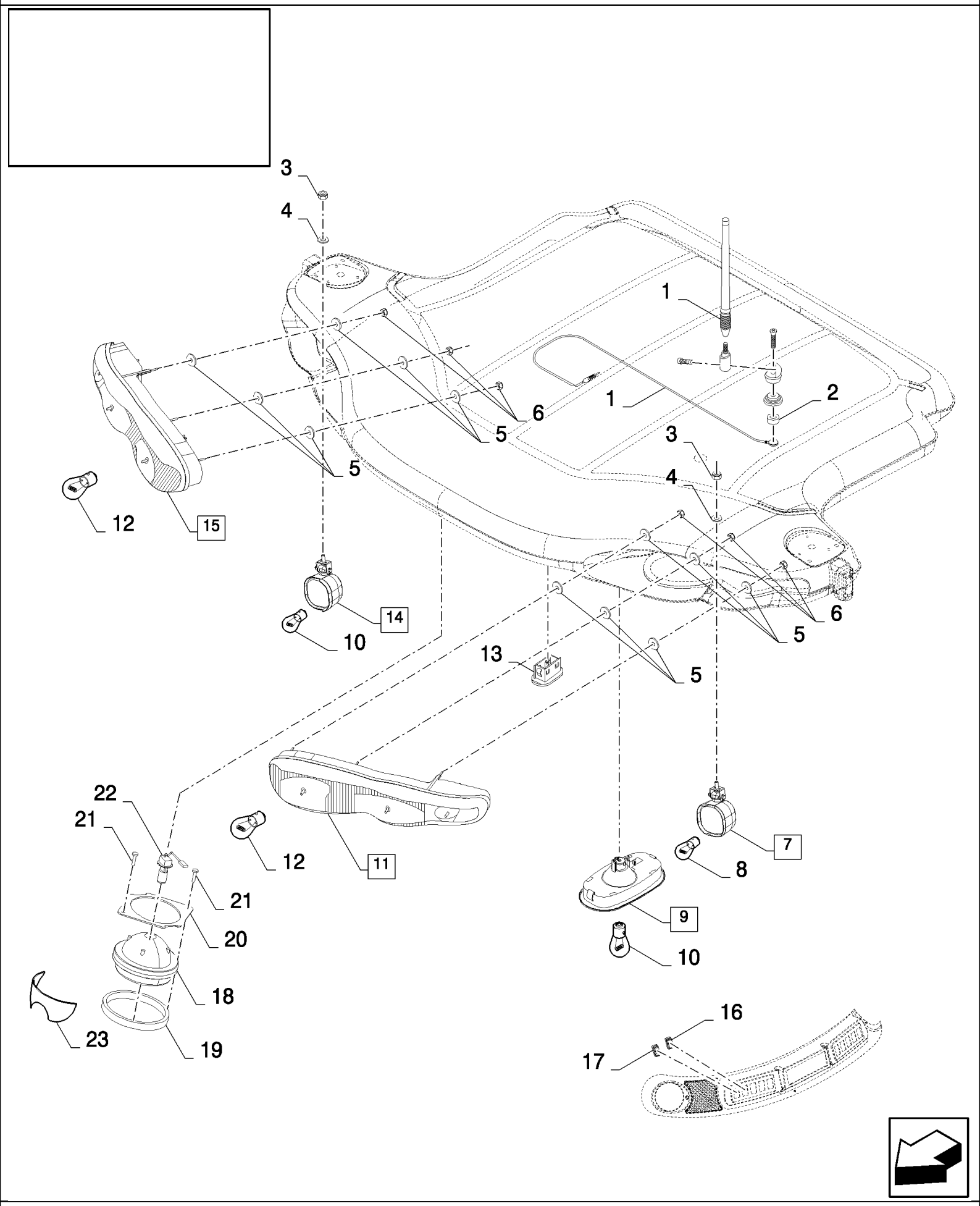

CX880 COMBINE - BASE UNIT (2/01-)

06.18(01) CAB ROOF LIGHTS AND ANTENNA

ссылка	Номер детали	Кол-во	Описание
1	9846820	1	ANTENNA,
2	86600857	1	BUSHING,
3	100037	2	NUT, M10 x 1.5, Cl 8,
4	140042	2	WASHER, M10 x 34 x 3,
5	84072877	12	WASHER, 6MM
6	353308	6	NUT, M6 x 1, Cl 8,
7	84607386	1	LAMP, (8)
8	9847313	1	BULB, #894, 12V, 37.5W, 12V-37.5W
9	86622305	1	LAMP, CEILING, (10)
10	86616249	1	BULB, 12V-10W
11	84059807	1	LAMP, FRONT, (12), BSN C281
11	84443575	1	LAMP, FRONT, , ASN D282
12	84429836	1	BULB, 12V-65W
13	84067961	1	LAMP, CEILING,
14	84607387	1	LAMP,
15	84059808	1	LAMP, FRONT, (12), BSN C281
15	84443576	1	LAMP, FRONT, , ASN D282
16	84320248	1	SWITCH, LIGHTS, WORK LIGHTS REAR
17	84320268	1	SWITCH, LIGHTS, WORK LIGHTS FRONT
18	84320764	1	LAMP,
19	84814420	1	SEAL,
20	84431845	1	PLATE,
21	86511042	2	SCREW, Cross Pan Hd, M4 x 16,
22	417720	1	BULB,
23	84448301	1	DECAL,

06.19(01) CAB FRAME, ELECTRICAL COMPONENTS

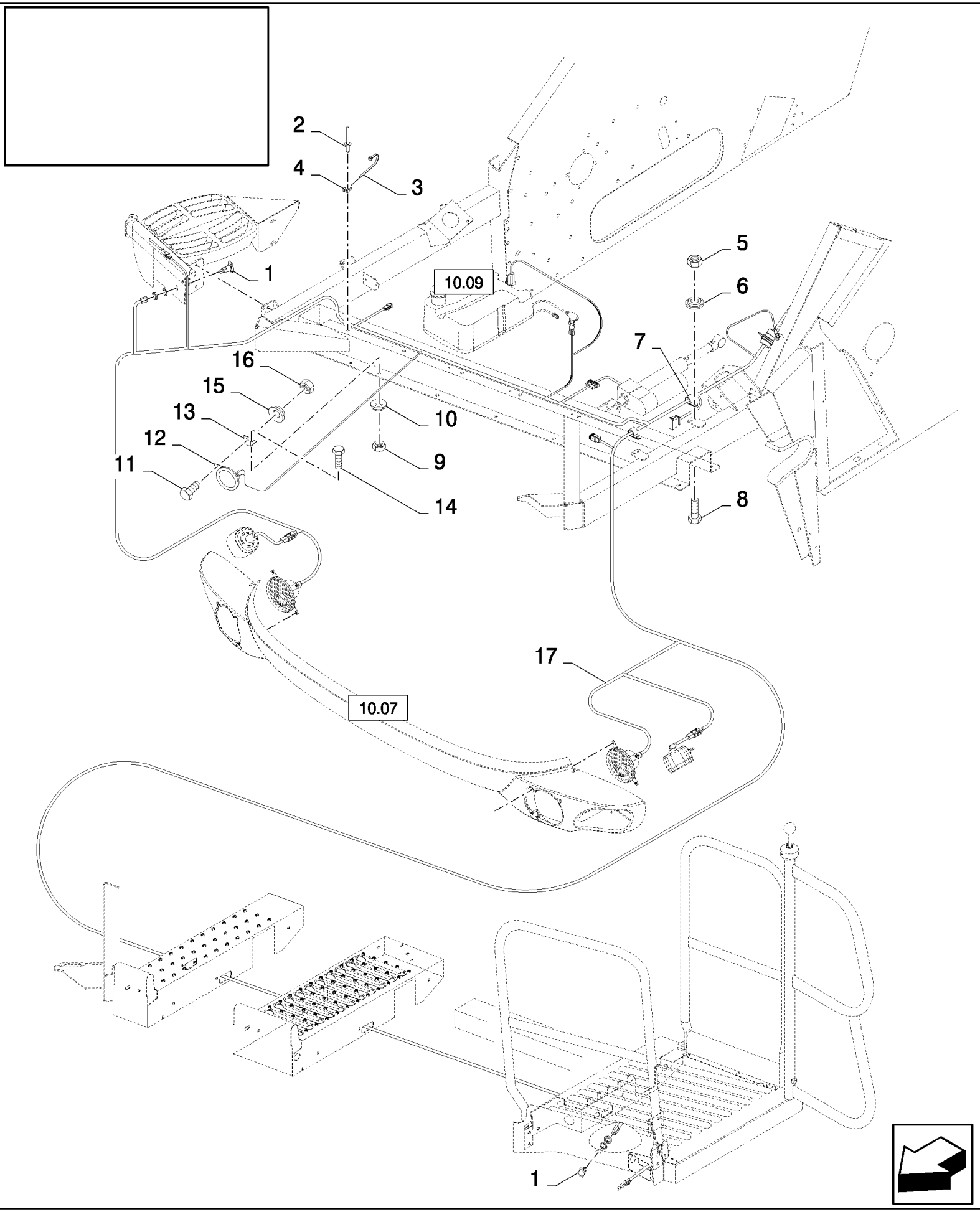

CX880 COMBINE - BASE UNIT (2/01-)

06.19(01) CAB FRAME, ELECTRICAL COMPONENTS

ссылка	Номер детали	Кол-во	Описание
1	82002966	2	SOCKET, POWER, , BSN C419
1	82002966	1	SOCKET, POWER, , ASN D420
2	445394	5	RIVET, Pop, M4.8 x 12.7,
3	86566989	5	STRAP, CABLE,
4	86590413	5	CLAMP,
5	15896221	2	NUT, M6, Cl 10,
6	322357	2	WASHER, SPRING, Belleville, M6,
7	9827902	2	CLAMP, 1", Insul, 3/8" Bolt,
8	120100	2	BOLT, Hex, M6 x 20, 8.8,
9	100016	1	NUT, M10, Cl 8,
10	140045	1	WASHER, SPRING, Belleville, M10,
11	120104	1	SCREW, Hex, M8 x 20, 8.8,
12	9821300	1	HORN,
13	84435605	1	SUPPORT,
14	43138	1	SCREW, Hex, M10 x 20, 8.8, Full Thd,
15	322358	1	WASHER, SPRING, Belleville, M8,
16	89706690	1	NUT, M8, Cl 8,
17	86639897	1	HARNESS, WIRE, , BSN C281
17	87015665	1	HARNESS, WIRE, , BSN F282419
17	84457623	1	HARNESS, WIRE, , ASN D420

06.20(01) STANDARD LIGHTS, FRONT - NOT FOR NA ONLY

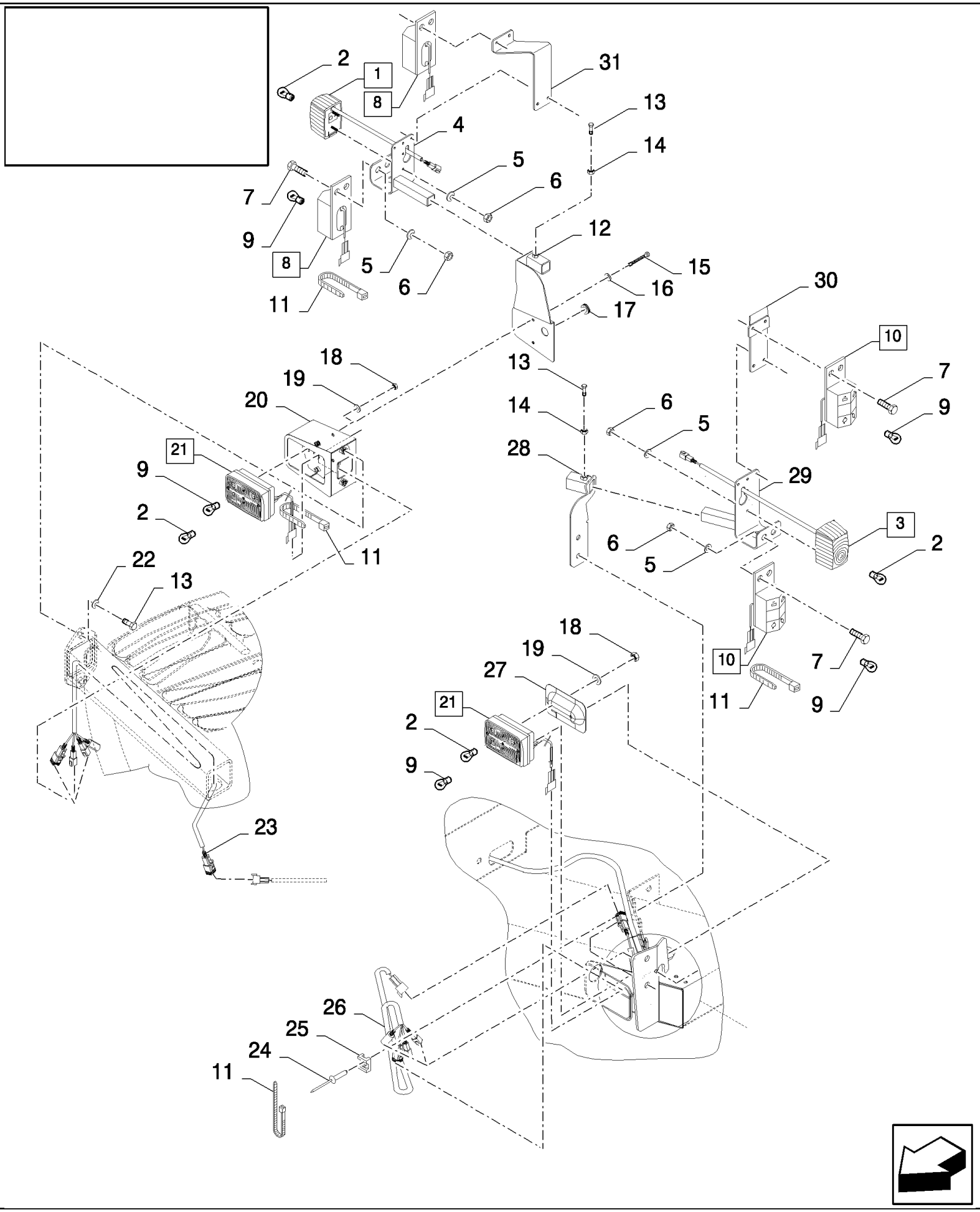

CX880 COMBINE - BASE UNIT (2/01-)

06.20(01) STANDARD LIGHTS, FRONT - NOT FOR NA ONLY

ссылка	Номер детали	Кол-во	Описание
1	84067995	1	LAMP ASSY, SIDE, (2)
2	398877	1	BULB, 12V-21W
3	84067994	1	LAMP ASSY, SIDE, (2)
4	84437441	1	SUPPORT, , BSN C281
4	84441699	1	SUPPORT, , ASN D282
5	322355	8	WASHER, Belleville, M4,
6	100012	8	NUT, M4, Cl 8,
7	86511042	4	SCREW, Cross Pan Hd, M4 x 16,
8	84437311	1	LAMP, (9)
9	89626322	1	BULB, #R5W, 5w,
10	84437310	1	LAMP, (9)
11	86566989	5	STRAP, CABLE,
12	84437591	1	PLATE, MOUNTING, , BSN C315
12	87106695	1	PLATE, MOUNTING, , ASN D316
13	120104	4	SCREW, Hex, M8 x 20, 8.8,
14	89706690	2	NUT, M8, Cl 8,
15	338413	2	SCREW, Hex, M6 x 60, 8.8,
16	322357	2	WASHER, SPRING, Belleville, M6,
17	103258	1	GROMMET, 5/8" ID x 7/8" Groove Dia, , BSN C323
17	102043	1	GROMMET, , ASN D324
18	86508813	4	NUT, M5, Cl 8,
19	322356	4	WASHER,
20	84607394	1	HOUSING,
21	84067986	2	LAMP, (2,9)
22	322358	2	WASHER, SPRING, Belleville, M8,
23	86616172	1	HARNESS, WIRE,
24	325911	2	RIVET, Pop, M4.8 x 7.4,
25	86590413	2	CLAMP,
26	86616173	1	HARNESS, WIRE,
27	84077902	1	COVER,
28	84437440	1	SUPPORT,
29	84437610	1	SUPPORT, , BSN C281
29	84441698	1	SUPPORT, , ASN D282
30	84441700	1	BRACKET, , ASN D282
31	84441701	1	SUPPORT, , ASN D282

06.21(01) STANDARD LIGHTS, FRONT - FOR NA ONLY

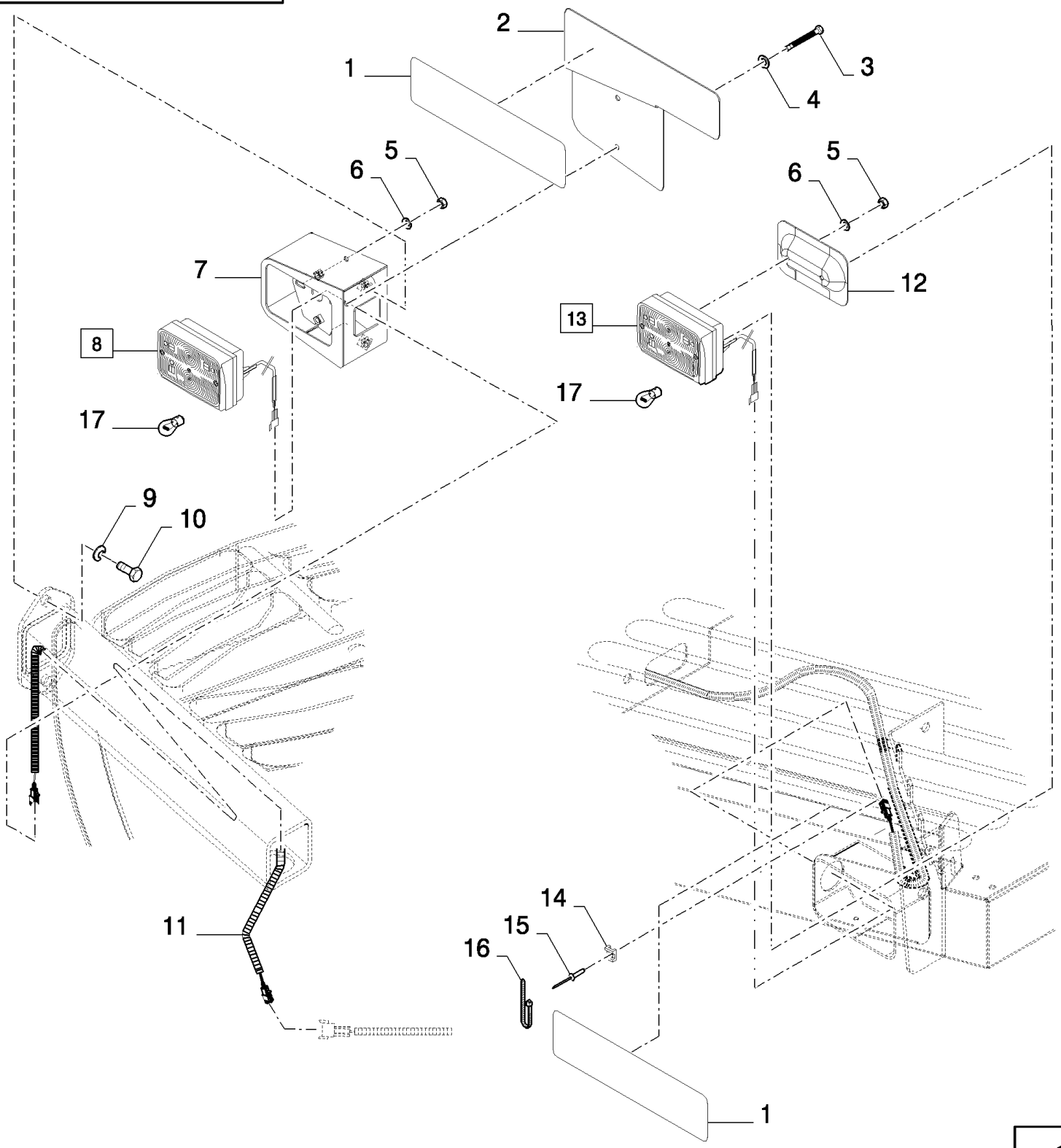

CX880 COMBINE - BASE UNIT (2/01-)

06.21(01) STANDARD LIGHTS, FRONT - FOR NA ONLY

ссылка	Номер детали	Кол-во	Описание
1	84607267	2	DECAL,
2	84607392	1	COVER, , BSN C315
2	87106476	1	BRACKET, , ASN D316
3	338413	2	SCREW, Hex, M6 x 60, 8.8,
4	322357	2	WASHER, SPRING, Belleville, M6,
5	86508813	4	NUT, M5, Cl 8,
6	322356	4	WASHER, 5MM
7	84607394	1	HOUSING,
8	84067997	1	LAMP, (17)
9	322358	2	WASHER, SPRING, Belleville, M8,
10	120104	2	SCREW, Hex, M8 x 20, 8.8,
11	86616167	1	HARNESS, WIRE,
12	84077902	1	COVER,
13	84067987	1	LAMP, (17)
14	86590413	2	CLAMP,
15	325911	2	RIVET, Pop, M4.8 x 7.4,
16	86566989	2	STRAP, CABLE,
17	398877	2	BULB, 12V-21W

06.22(01) ADDITIONAL FRONT LIGHTS

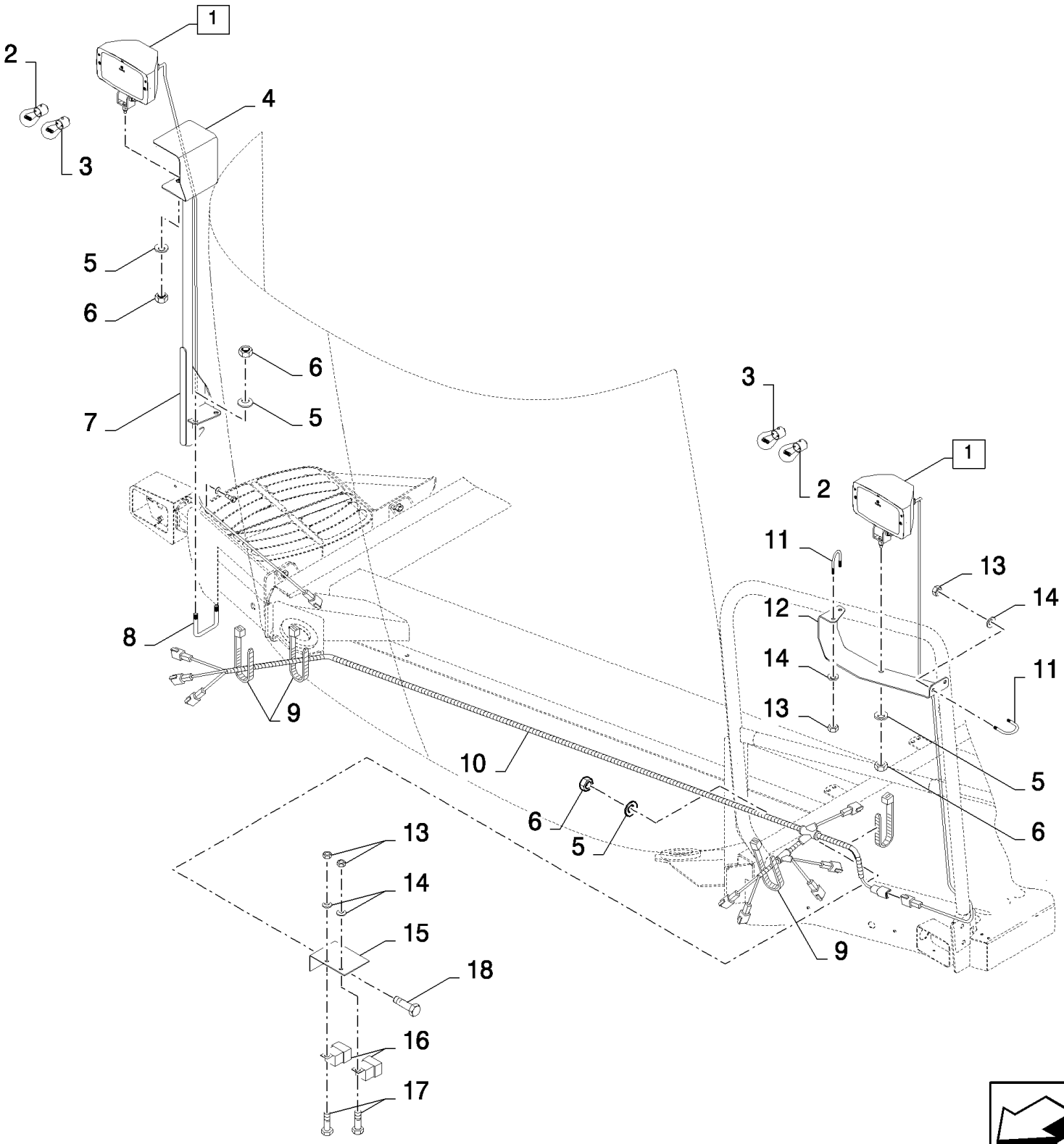

CX880 COMBINE - BASE UNIT (2/01-)

06.22(01) ADDITIONAL FRONT LIGHTS

ссылка	Номер детали	Кол-во	Описание
1	86613046	2	LAMP, (2,3)
2	353078	1	BULB,
3	446592	1	BULB,
4	84433636	1	SHIELD,
5	140045	5	WASHER, SPRING, Belleville, M10,
6	100016	5	NUT, M10, Cl 8,
7	84077941	1	SUPPORT, , BSN C281
7	84442456	1	SUPPORT, , ASN D282
8	84334056	1	U-BOLT,
9	86566990	17	STRAP, CABLE,
10	86616161	1	HARNESS, WIRE,
11	799339	2	U-BOLT,
12	84433635	1	BRACKET, , BSN C281
12	84442455	1	BRACKET, , BSN F282347
12	87106686	1	BRACKET, , ASN D348
13	15896221	6	NUT, M6, Cl 10,
14	322357	6	WASHER, SPRING, Belleville, M6,
15	86643195	1	BRACKET,
16	86606352	2	RELAY,
17	86508568	2	SCREW, Hex, M6 x 16, 8.8,
18	43138	1	SCREW, Hex, M10 x 20, 8.8, Full Thd,

CX880 COMBINE - BASE UNIT (2/01-)

06.23(01) STANDARD LIGHTS, REAR - NOT FOR NA ONLY

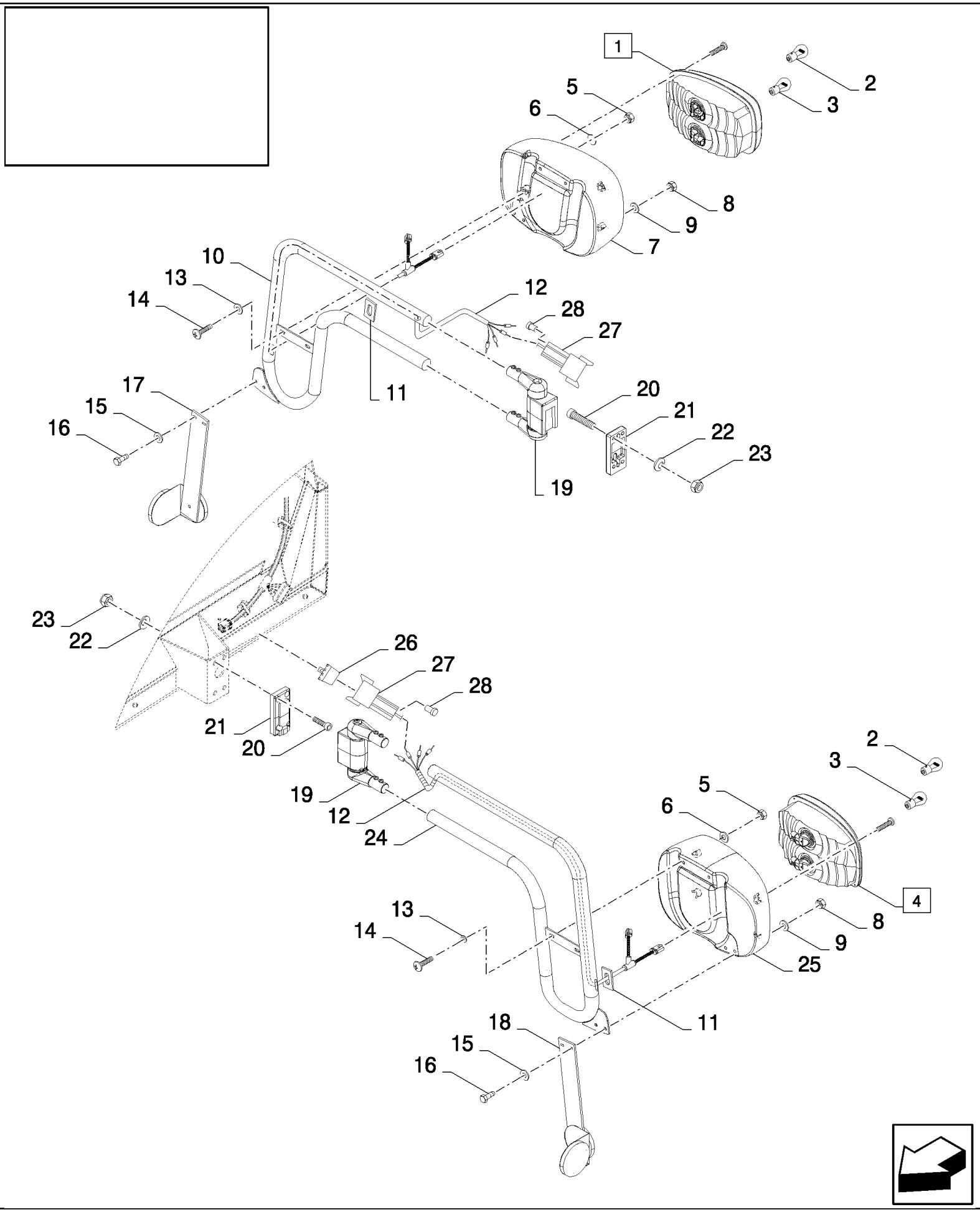

CX880 COMBINE - BASE UNIT (2/01-)

06.23(01) STANDARD LIGHTS, REAR - NOT FOR NA ONLY

ссылка	Номер детали	Кол-во	Описание
1	84429841	1	LAMP, (2,3)
2	398877	1	BULB, 12V-21W
3	86616247	1	BULB, 12V-21/5W
4	84429840	1	LAMP, (2,3)
5	353308	4	NUT, M6 x 1, Cl 8,
6	140040	4	WASHER, M6 x 22 x 2,
7	84433417	1	HOUSING,
8	80043440	4	NUT, LOCK, M5 x .8, Cl 8, M5
9	140182	4	WASHER, M5 x 18 x 2,
10	86623414	1	ARM,
11	84433705	2	GASKET,
12	86616165	2	HARNESS, WIRE,
13	448889	4	WASHER,
14	86511830	4	SCREW, Cross Pan Hd, M6 x 20,
15	140014	4	WASHER, M5 x 10 x 1,
16	86585710	4	SCREW, Cross Pan Hd, M5 x 25, M5x25
17	84434646	1	ARM, , BSN C281
17	84442353	1	ARM, SUPPORTING, , ASN D282
18	84433152	1	ARM, , BSN C281
18	84442352	1	ARM, SUPPORTING, , ASN D282
19	84433428	2	BLOCK, COUPLING,
20	120228	8	SCREW, Hex Soc Hd, M8 x 20, 8.8,
21	84433427	2	PLATE,
22	322358	8	WASHER, SPRING, Belleville, M8,
23	89706690	8	NUT, M8, Cl 8,
24	86623416	1	ARM,
25	84433416	1	HOUSING,
26	89861378	2	PLUG,
27	89861351	2	CONNECTOR, WIRE,
28	84068583	2	PLUG,

06.24(01) STANDARD LIGHTS, REAR - FOR NA ONLY

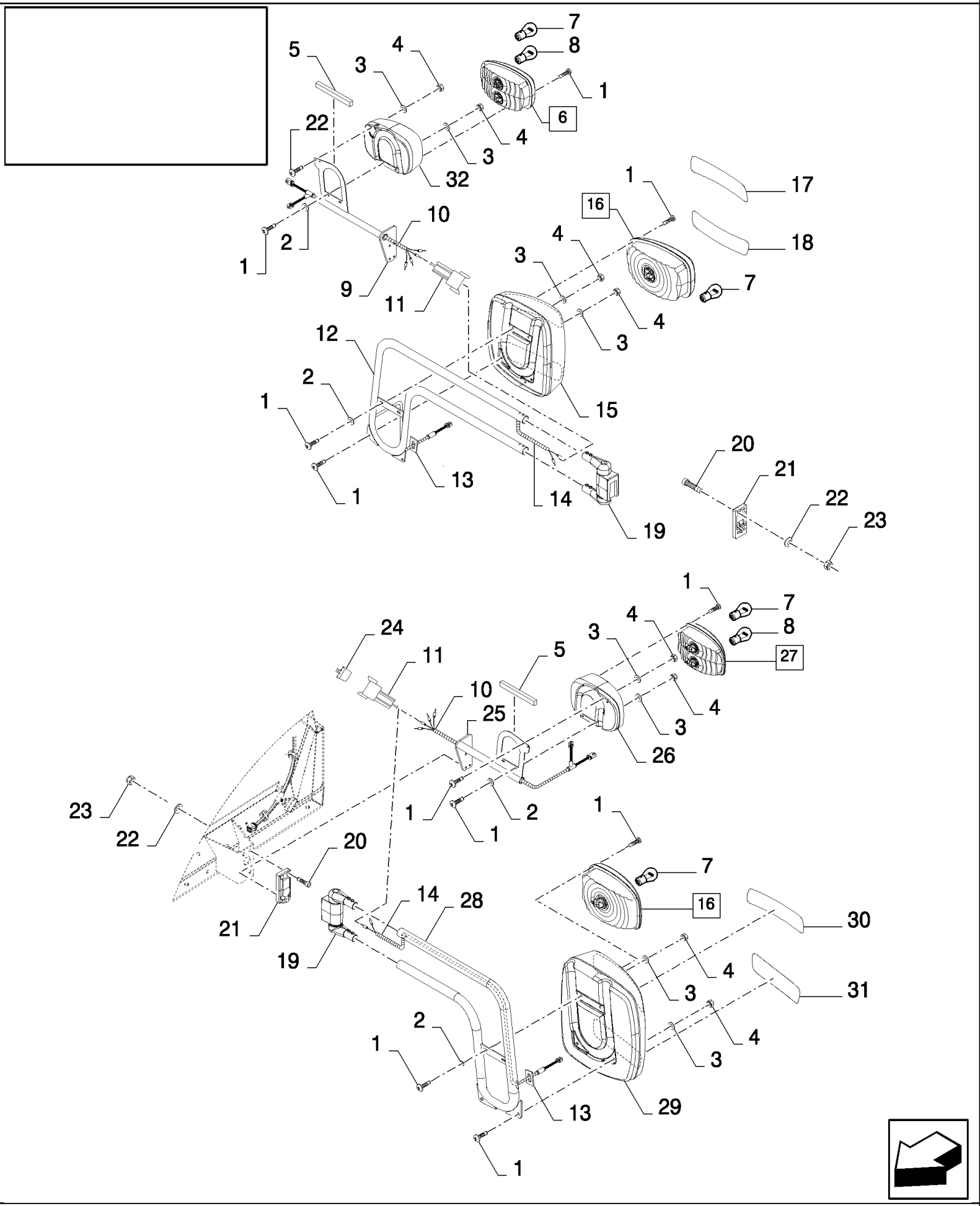

CX880 COMBINE - BASE UNIT (2/01-)

06.24(01) STANDARD LIGHTS, REAR - FOR NA ONLY

ссылка	Номер детали	Кол-во	Описание
1	86511830	16	SCREW, Cross Pan Hd, M6 x 20,
2	448889	8	WASHER,
3	140040	16	WASHER, M6 x 22 x 2,
4	353308	16	NUT, M6 x 1, Cl 8,
5	84429840	2	LAMP,
6	84429841	1	LAMP, (7,8)
7	398877	4	BULB, 12V-21W
8	86616247	2	BULB, 12V-21/5W
9	86623336	1	ARM,
10	86616166	2	HARNESS, WIRE,
11	89861351	2	CONNECTOR, WIRE,
12	86623353	1	ARM,
13	84433705	2	GASKET,
14	86616176	2	HARNESS, WIRE,
15	84433419	1	HOUSING,
16	84429839	2	LAMP, (7)
17	84607389	1	DECAL,
18	84433767	1	DECAL,
19	84433428	1	BLOCK, COUPLING,
20	84000811	8	SCREW, M8x35
21	84433427	2	PLATE,
22	322358	8	WASHER, SPRING, Belleville, M8,
23	89706690	8	NUT, M8, Cl 8,
24	89861378	2	PLUG,
25	86623338	1	ARM,
26	84607391	1	HOUSING,
27	84429840	1	LAMP, (7,8)
28	86623351	1	ARM,
29	84433418	1	HOUSING,
30	84607388	1	DECAL,
31	84433766	1	DECAL,
32	84607390	1	HOUSING,

06.25(01) SPECIFIC LIGHTS FOR AUSTRIA

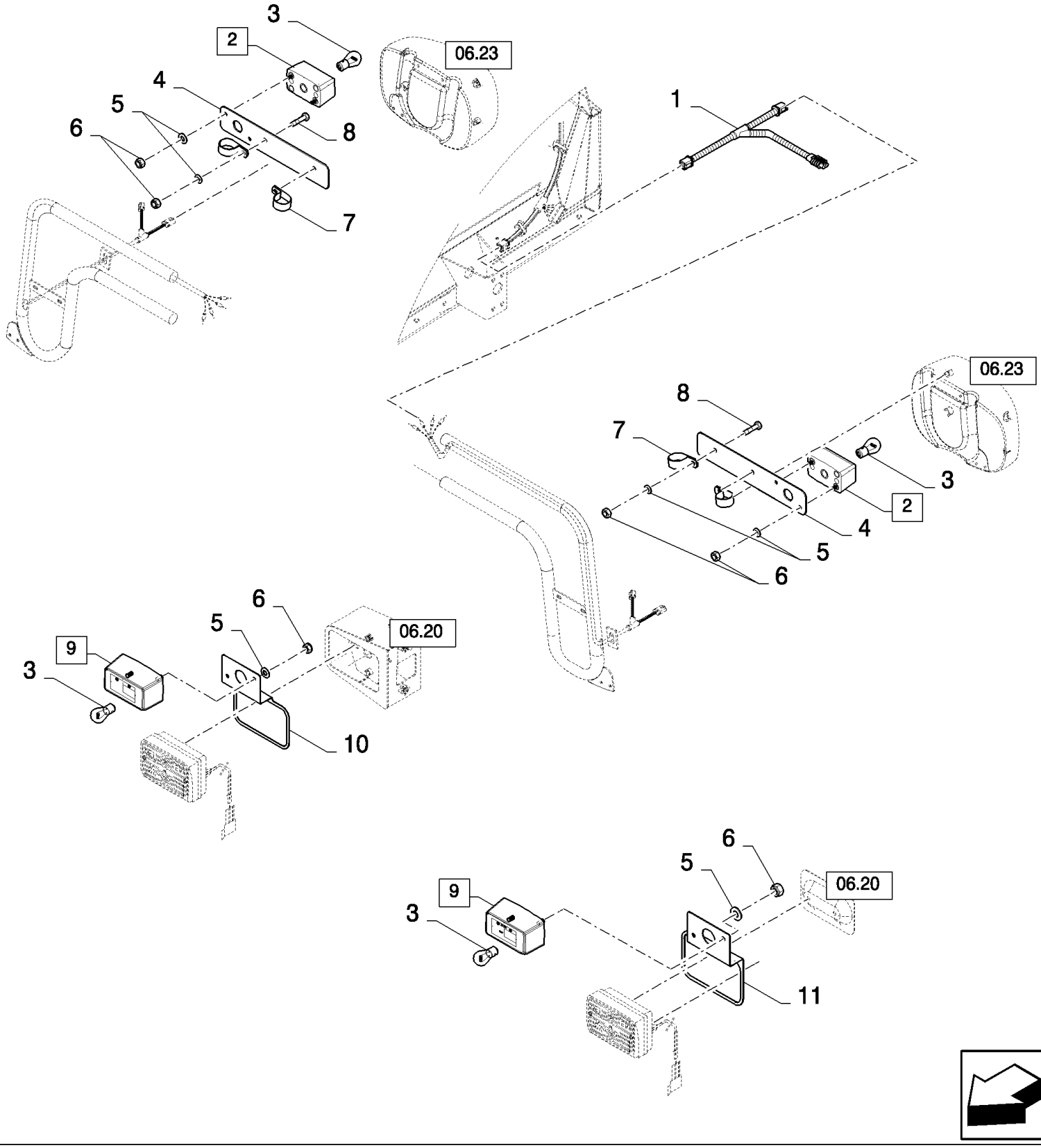

CX880 COMBINE - BASE UNIT (2/01-)

06.25(01) SPECIFIC LIGHTS FOR AUSTRIA

ссылка	Номер детали	Кол-во	Описание
1	86616175	2	HARNESS, WIRE, , BSN C347
1	87030365	2	HARNESS, WIRE, , ASN D348
2	84429842	1	LAMP, (3)
3	86616250	1	BULB, #W5W, 5w, 12V-5W
4	84438858	2	BRACKET,
5	140014	AR	WASHER, M5 x 10 x 1,
6	80043440	AR	NUT, LOCK, M5 x .8, Cl 8, M5
7	84433319	4	CLAMP,
8	86585710	4	SCREW, Cross Pan Hd, M5 x 25, M5x25
9	84067992	2	LAMP,
10	84431478	1	BRACKET,
11	86596662	1	BRACKET,

06.26(01) NUMBER PLATE AND LIGHT FOR SWITZERLAND AND AUSTRIA ONLY

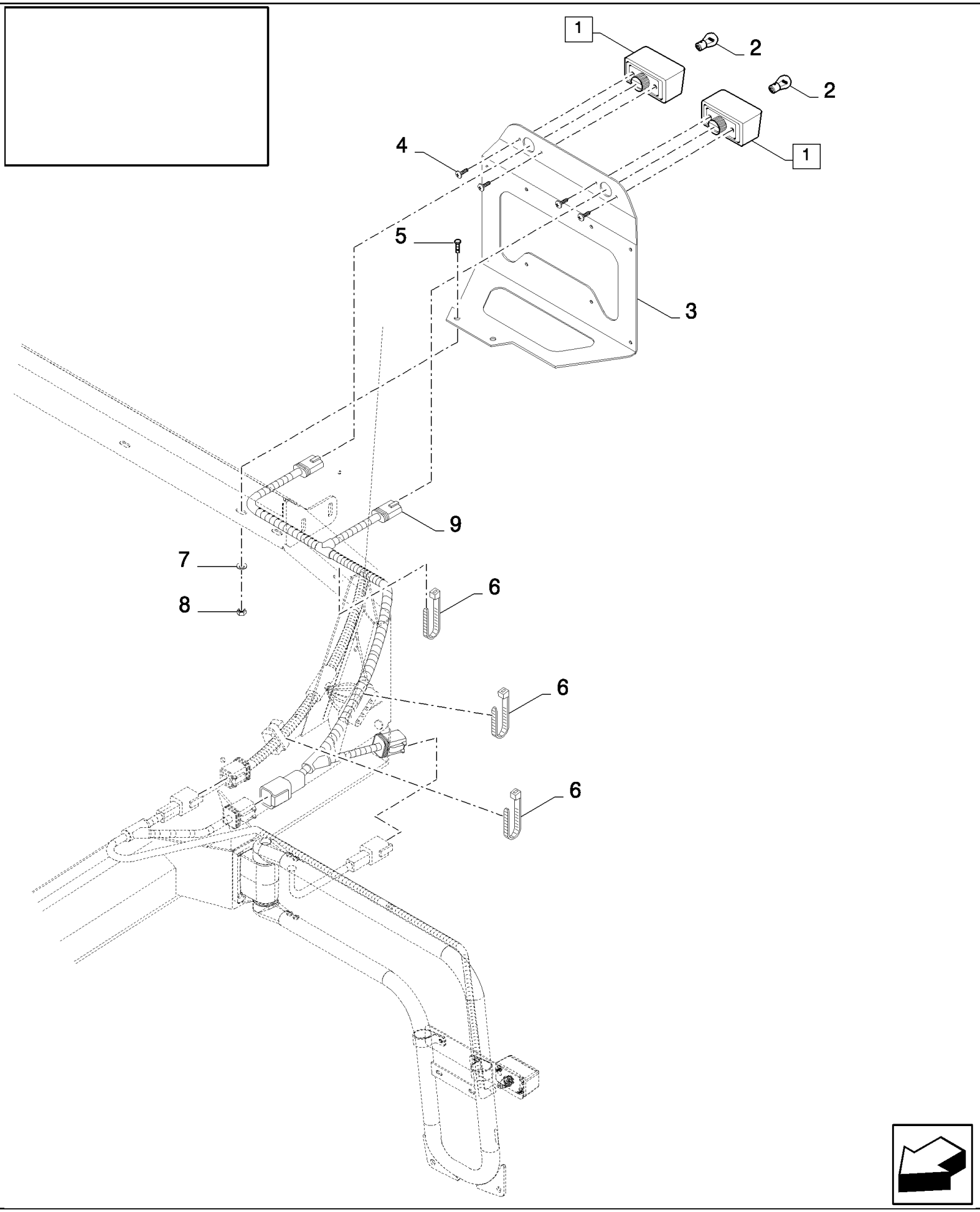

CX880 COMBINE - BASE UNIT (2/01-)

06.26(01) NUMBER PLATE AND LIGHT FOR SWITZERLAND AND AUSTRIA ONLY

ссылка	Номер детали	Кол-во	Описание
1	84067964	2	LAMP, NUMBER PLATE, (2)
2	86616250	1	BULB, #W5W, 5w, 12V-5W
3	84439954	1	PLATE,
4	9835804	4	SCREW,
5	120104	2	SCREW, Hex, M8 x 20, 8.8,
6	86566989	3	STRAP, CABLE,
7	322358	2	WASHER, SPRING, Belleville, M8,
8	89706690	2	NUT, M8, Cl 8,
9	86616163	1	HARNESS, WIRE, , BSN C347
9	87030364	1	HARNESS, WIRE, , ASN D348

06.27(01) REAR LIGHTS EXTENSIONS

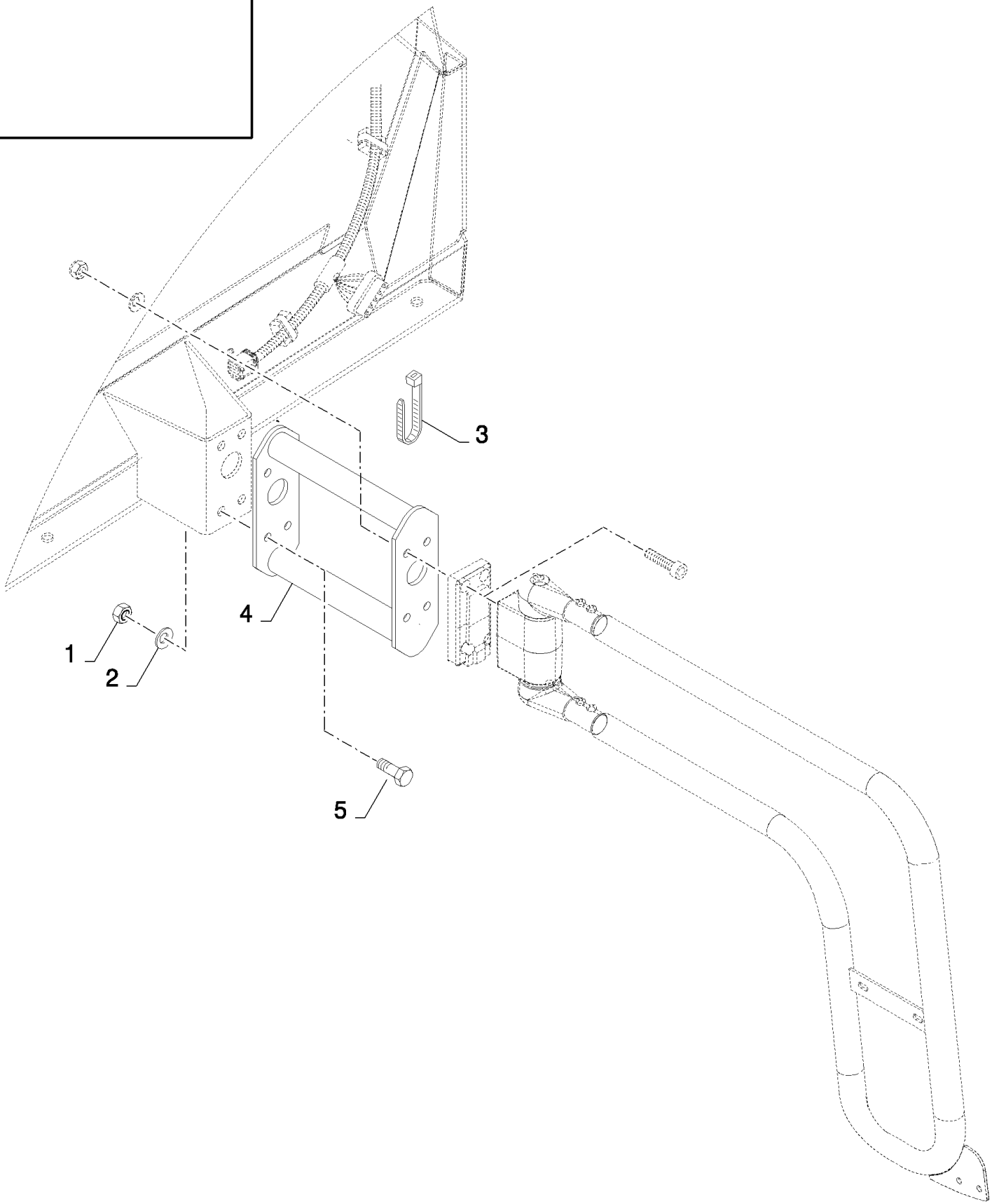

CX880 COMBINE - BASE UNIT (2/01-)

06.27(01) REAR LIGHTS EXTENSIONS

ссылка	Номер детали	Кол-во	Описание
1	89706690	8	NUT, M8, Cl 8,
2	322358	8	WASHER, SPRING, Belleville, M8,
3	86566989	8	STRAP, CABLE,
4	84433703	2	EXTENSION,
4	84433787	2	EXTENSION, , FOR NA ONLY
5	43127	8	BOLT, Hex, M8 x 25, 8.8,

06.28(01) NUMBER PLATE AND LIGHT

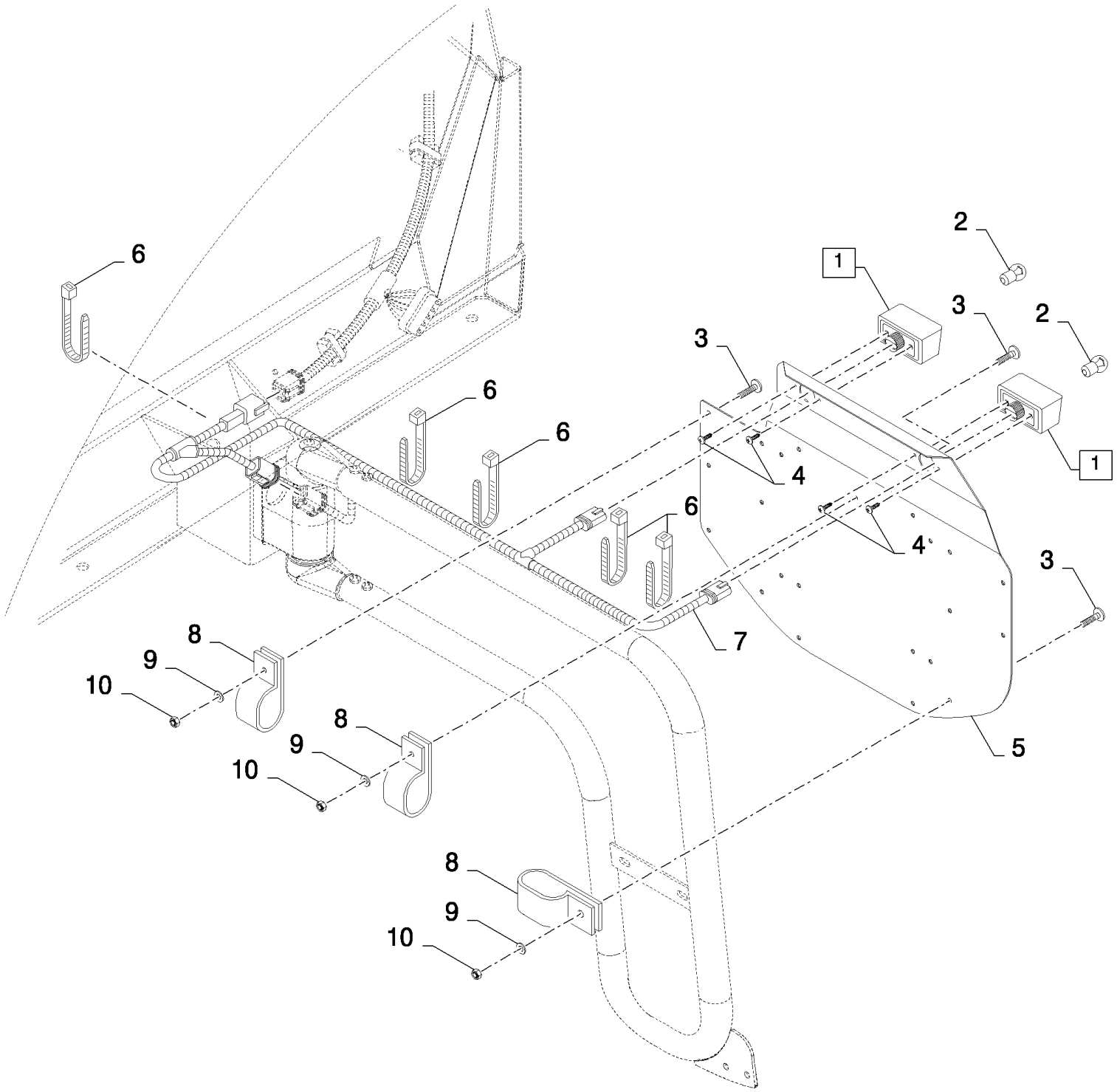

CX880 COMBINE - BASE UNIT (2/01-)

06.28(01) NUMBER PLATE AND LIGHT

ссылка	Номер детали	Кол-во	Описание
1	84067964	2	LAMP, NUMBER PLATE, (2)
2	86616250	1	BULB, #W5W, 5w, 12V-5W
3	86050276	3	BOLT, Hex, M5 x 16, 8.8, Full Thd,
4	9835804	4	SCREW,
5	84433973	1	PLATE,
6	86566989	4	STRAP, CABLE,
7	86616163	1	HARNESS, WIRE, , BSN C347
7	87030364	1	HARNESS, WIRE, , ASN D348
8	84433319	3	CLAMP,
9	140015	3	WASHER, 6MM
10	86508813	3	NUT, M5, Cl 8,

06.29(01) INSPECTION LAMP

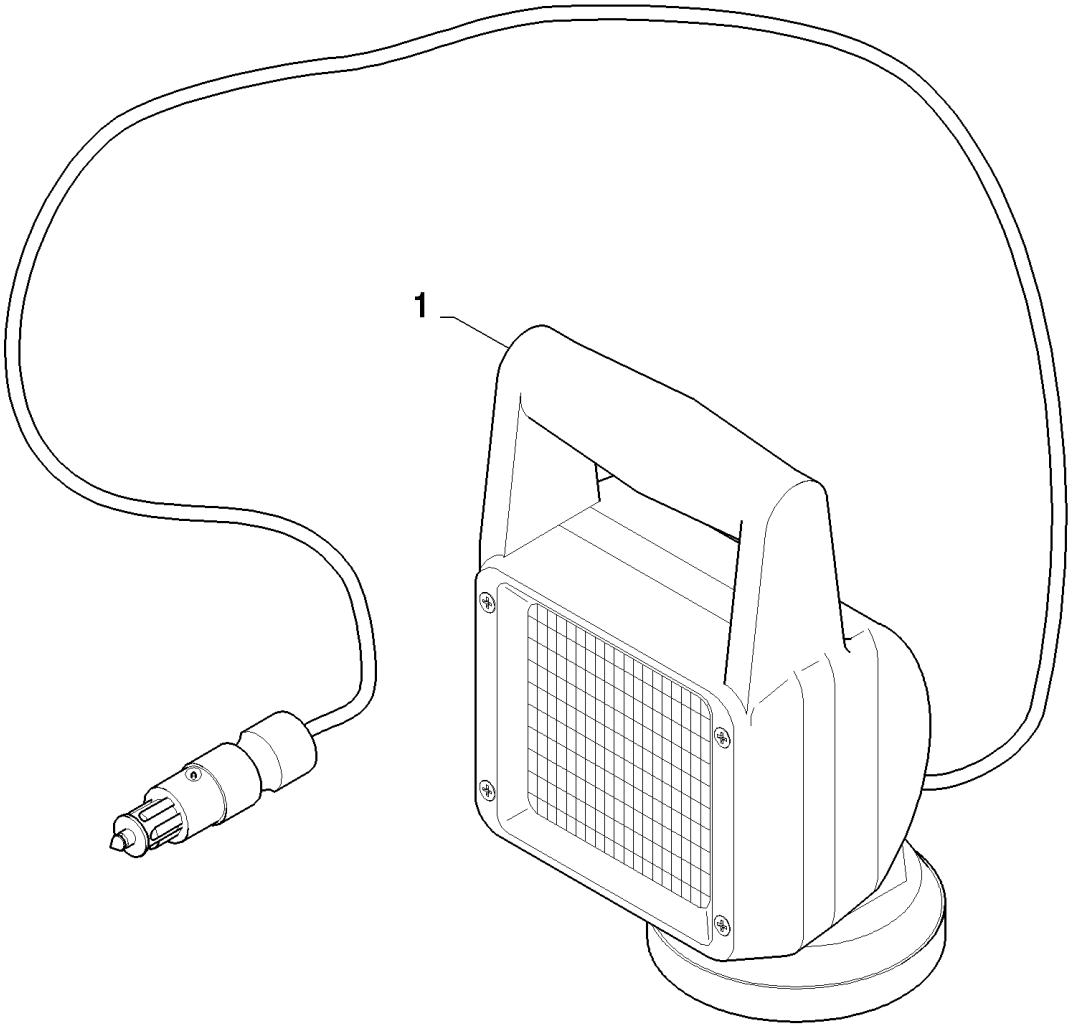

CX880 COMBINE - BASE UNIT (2/01-)

06.29(01) INSPECTION LAMP

ссылка	Номер детали	Кол-во	Описание
1	84059809	1	LAMP, PORTABLE,
1	86508819	1	CONNECTOR, ELEC, Male
1	9703399	1	BULB, 12V 55W

06.30(01) STRAW ELEVATOR, ELECTRICAL COMPONENTS

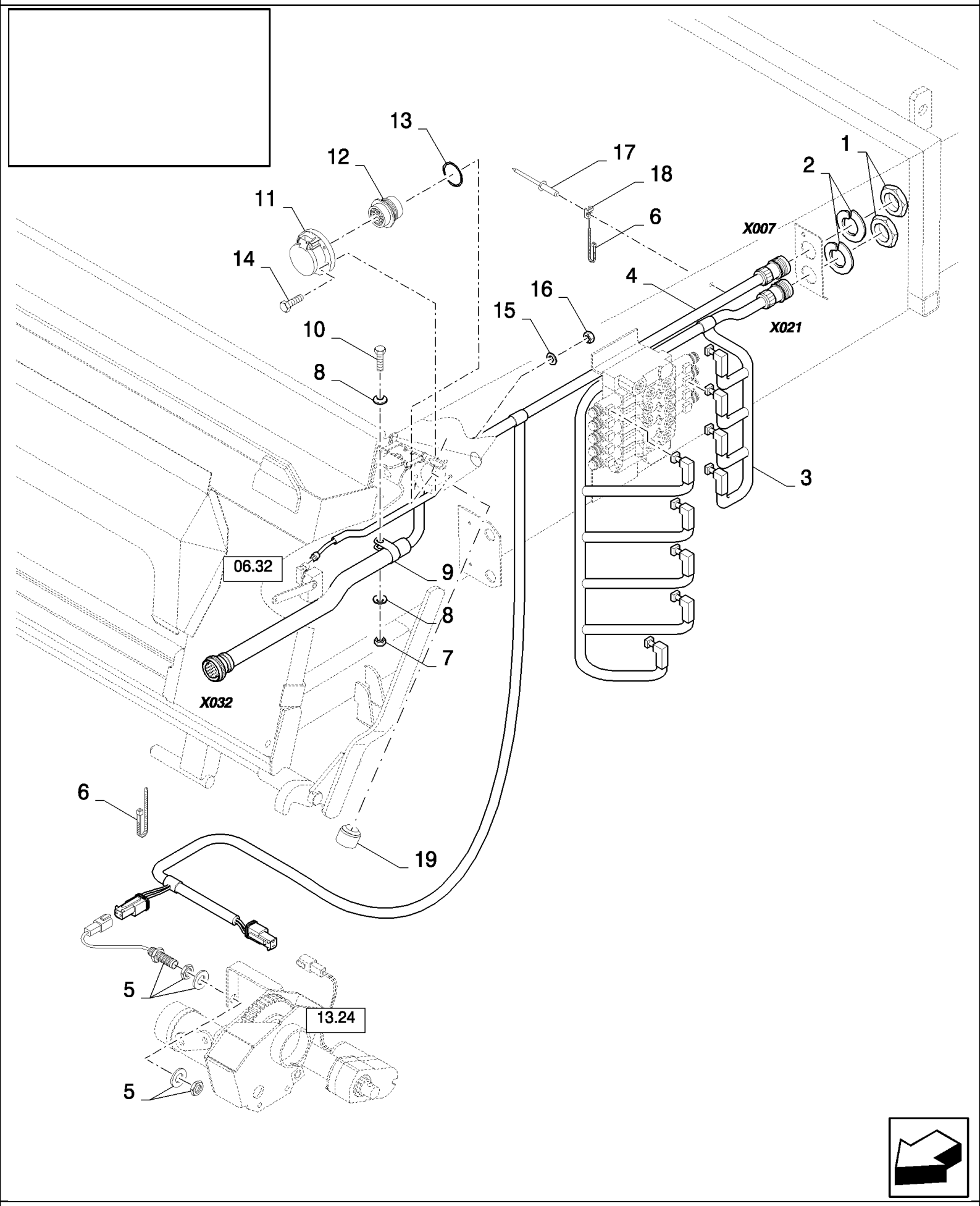

CX880 COMBINE - BASE UNIT (2/01-)

06.30(01) STRAW ELEVATOR, ELECTRICAL COMPONENTS

ссылка	Номер детали	Кол-во	Описание
1	86619907	2	NUT,
2	636665	2	WASHER, LOCK,
3	86594056	1	HARNESS, WIRE,
4	87015653	1	HARNESS, WIRE, , BSN C347
4	87030689	1	HARNESS, WIRE, , ASN D348
5	84058863	1	SENSOR,
6	86566989	8	STRAP, CABLE,
7	15896221	1	NUT, M6, Cl 10,
8	322357	2	WASHER, SPRING, Belleville, M6,
9	9837625	1	CLAMP,
10	120100	1	BOLT, Hex, M6 x 20, 8.8,
11	86606228	1	COVER, , BSN C415
12	767455	1	DUST CAP, , BSN C415
13	84037188	1	O-RING, , BSN C415
14	86585710	3	SCREW, Cross Pan Hd, M5 x 25, M5x25, BSN C415
15	140014	3	WASHER, M5 x 10 x 1, , BSN C415
16	80043440	3	NUT, LOCK, M5 x .8, Cl 8, M5, BSN C415
17	80445395	6	RIVET,
18	86590413	6	CLAMP,
19	87105683	1	CAP, , ASN D416

06.31(01) FEEDER ANGLE SENSOR

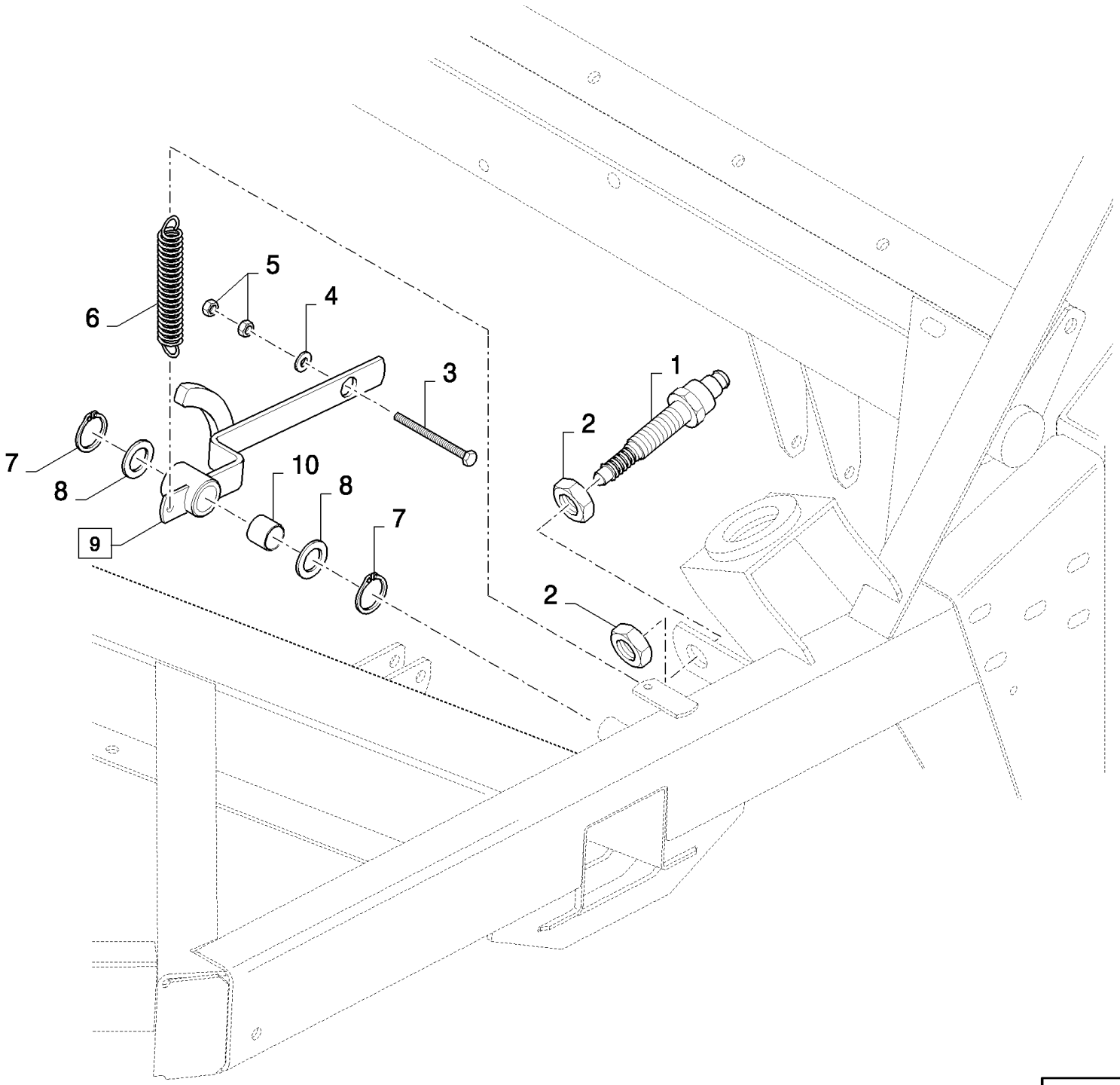

CX880 COMBINE - BASE UNIT (2/01-)

06.31(01) FEEDER ANGLE SENSOR

ссылка	Номер детали	Кол-во	Описание
1	9513732	1	SENSOR,
2	100033	2	NUT, Thin, M24 x 1.5, Cl 04,
3	397985	1	BOLT, Hex, M6 x 70, 8.8, Full Thd,
4	86505666	1	WASHER, LOCK, 6MM
5	15896221	2	NUT, M6, Cl 10,
6	180071	1	SPRING,
7	370002	2	RING, SNAP, M25, Ext,
8	140104	2	WASHER,
9	84073282	1	LEVER, (10)
10	84057311	2	SLEEVE,

06.32(01) LATERAL FLOTATION SENSOR

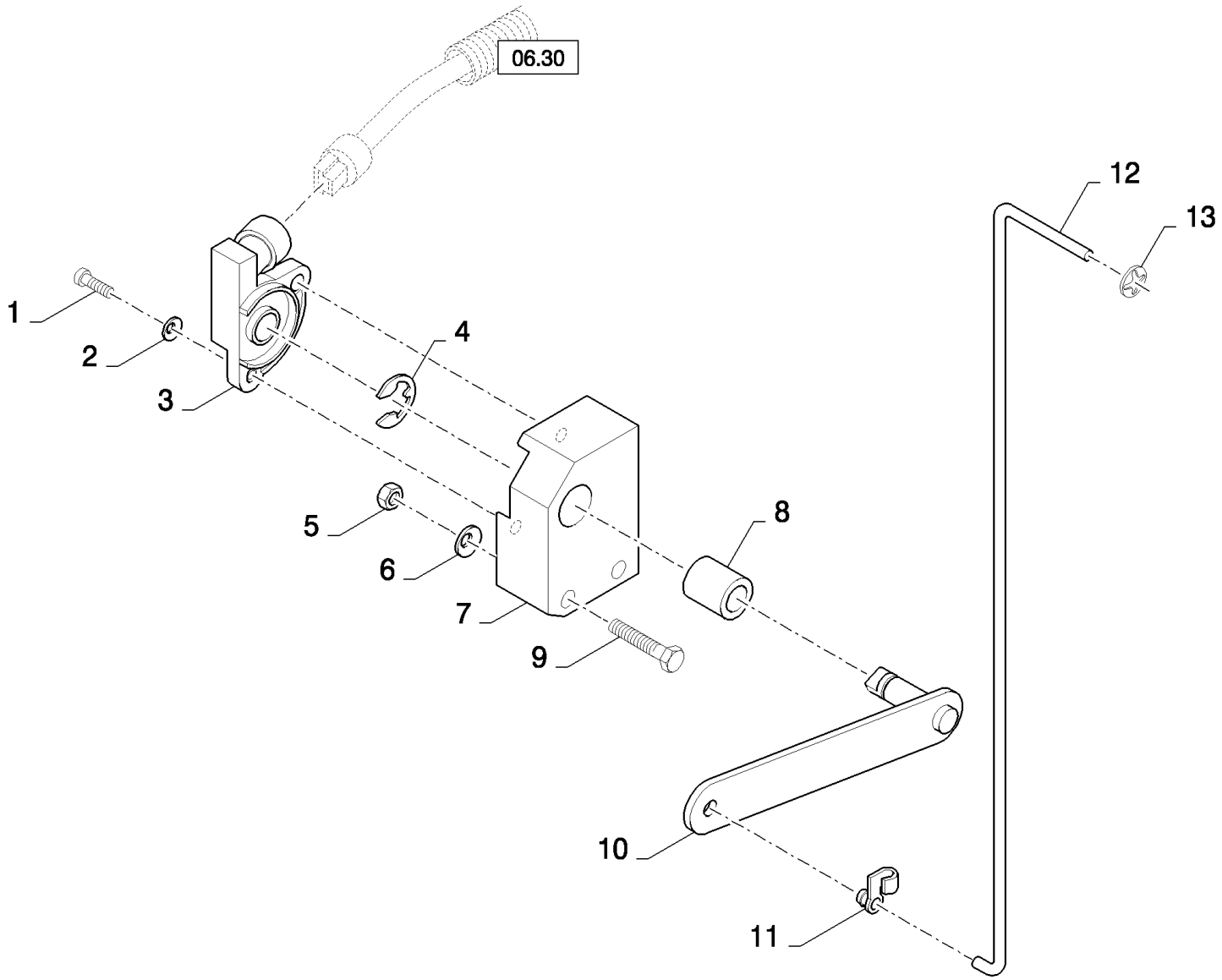

CX880 COMBINE - BASE UNIT (2/01-)

06.32(01) LATERAL FLOTATION SENSOR

ссылка	Номер детали	Кол-во	Описание
1	86511042	2	SCREW, Cross Pan Hd, M4 x 16,
2	322355	2	WASHER, Belleville, M4,
3	86977396	1	POTENTIOMETER,
4	86000439	1	RING, SNAP, #37, Ext,
5	15896221	2	NUT, M6, Cl 10,
6	322357	2	WASHER, SPRING, Belleville, M6,
7	86011325	1	BRACKET, , BSN C763
7	84457806	1	BRACKET, , ASN D764
8	86516740	1	BUSHING,
9	43118	2	BOLT, Hex, M6 x 40, 8.8,
10	84076645	1	LEVER,
11	9821714	1	CLIP,
12	84076424	1	ROD, , FOR FRONT FACE ADJUSTMENT WITH LF ONLY
12	84437606	1	ROD, , FOR LATERAL FLOTATION ONLY
13	398561	1	CLIP,

06.33(01) THRESHING FRAME, ELECTRICS

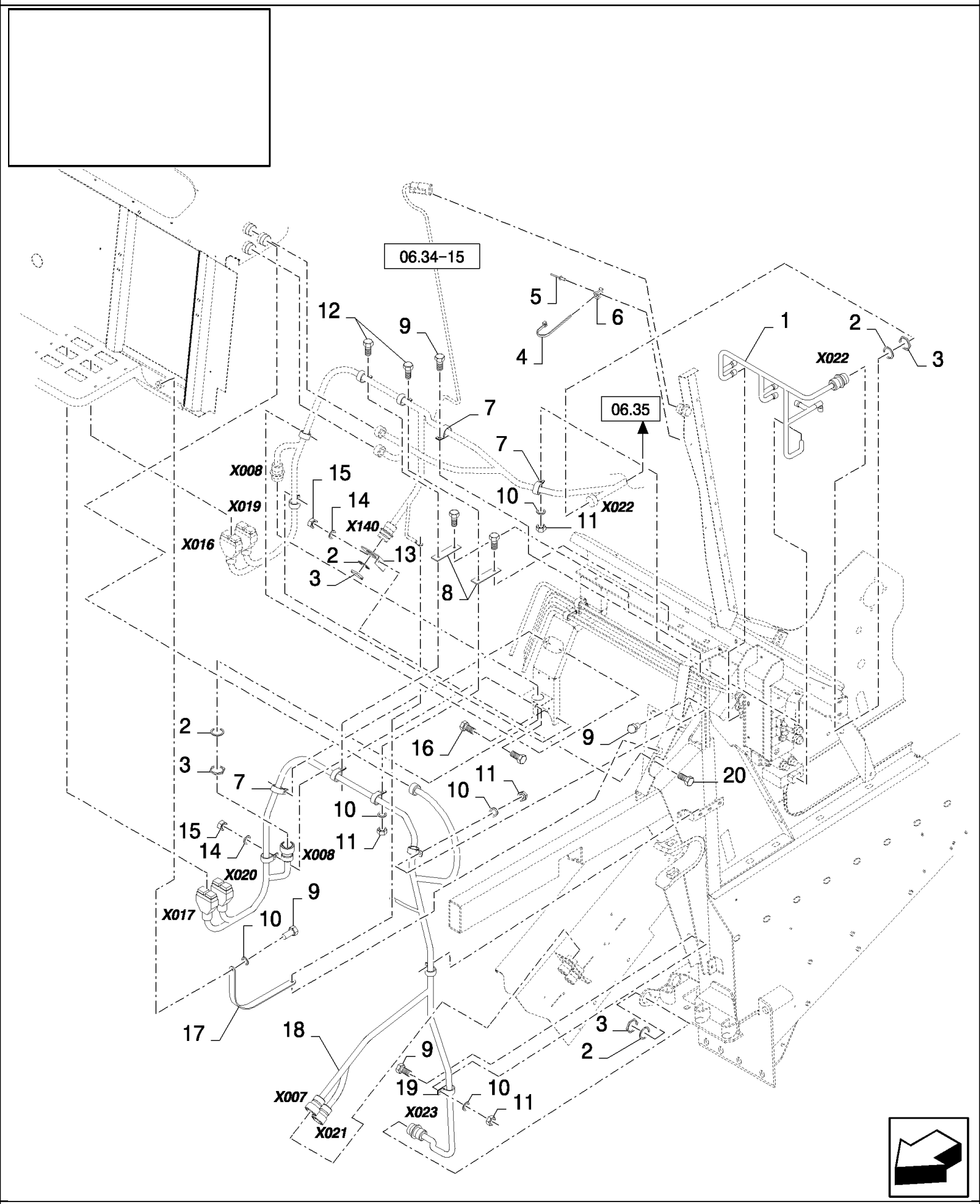

CX880 COMBINE - BASE UNIT (2/01-)

06.33(01) THRESHING FRAME, ELECTRICS

ссылка	Номер детали	Кол-во	Описание
1	86594057	1	HARNESS, WIRE, , BSN C481
2	636665	4	WASHER, LOCK,
3	86619907	4	NUT,
4	86566989	3	STRAP, CABLE,
5	445394	3	RIVET, Pop, M4.8 x 12.7,
6	86590413	3	CLAMP,
7	84053873	11	CLAMP,
8	84435333	2	SUPPORT,
9	120104	6	SCREW, Hex, M8 x 20, 8.8,
10	322358	11	WASHER, SPRING, Belleville, M8,
11	89706690	9	NUT, M8, Cl 8,
12	43128	4	BOLT, Hex, M8 x 30, 8.8,
13	86633773	1	BRACKET,
14	322357	6	WASHER, SPRING, Belleville, M6,
15	15896221	6	NUT, M6, Cl 10,
16	43117	4	BOLT, Hex, M6 x 30, 8.8,
17	86534915	1	CABLE, GROUND,
18	86639898	1	HARNESS, WIRE, , BSN C281
18	87015666	1	HARNESS, WIRE, , BSN F282347
18	87030687	1	HARNESS, WIRE, , ASN D348
19	9827902	2	CLAMP, 1", Insul, 3/8" Bolt,
20	120100	2	BOLT, Hex, M6 x 20, 8.8,

06.34(01) FUEL TANK ELECTRICS AND BEATER SENSOR

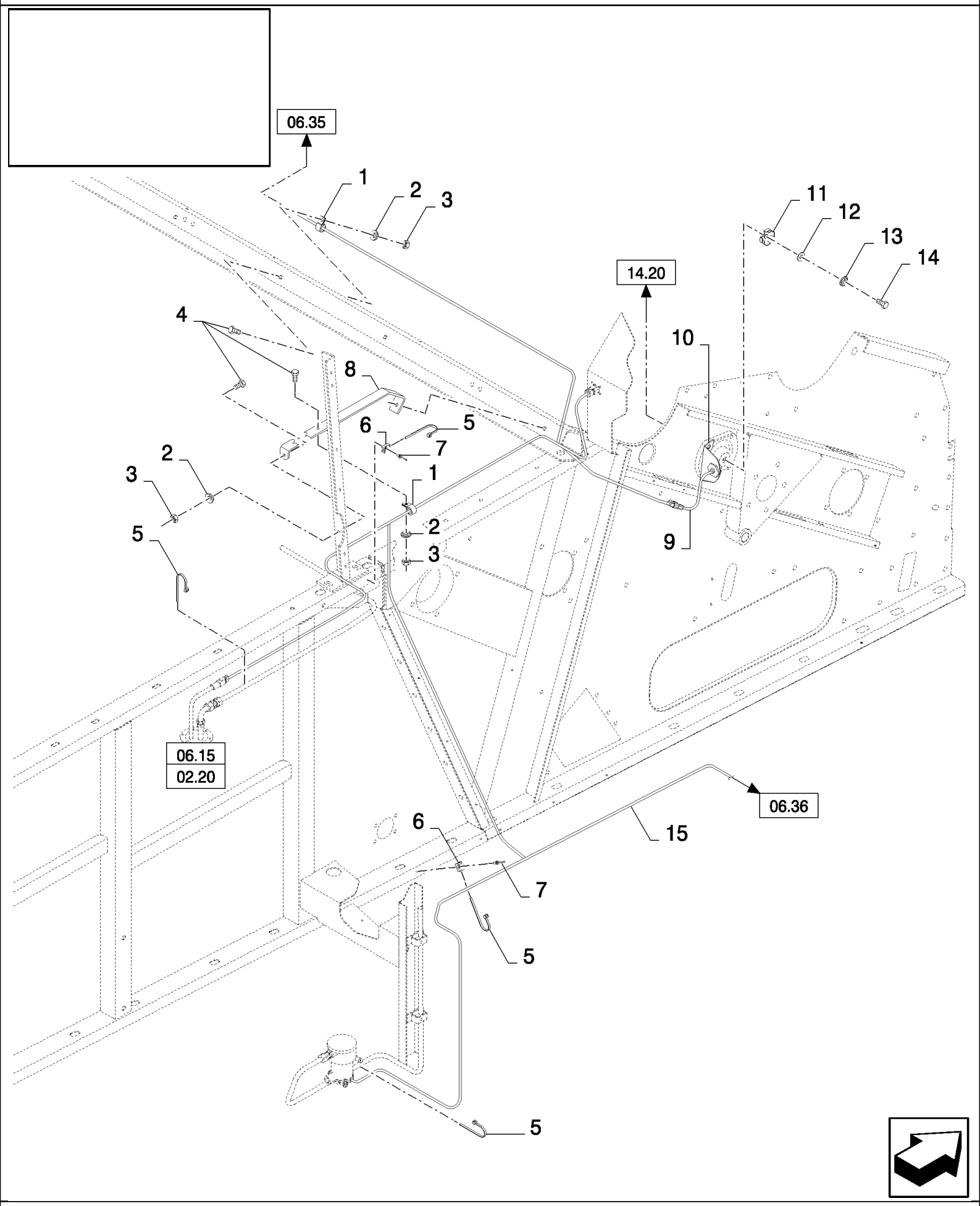

CX880 COMBINE - BASE UNIT (2/01-)

06.34(01) FUEL TANK ELECTRICS AND BEATER SENSOR

ссылка	Номер детали	Кол-во	Описание
1	9837692	6	CLAMP,
2	322358	7	WASHER, SPRING, Belleville, M8,
3	89706690	7	NUT, M8, Cl 8,
4	120104	7	SCREW, Hex, M8 x 20, 8.8,
5	86566989	AR	STRAP, CABLE,
6	86590413	14	CLAMP,
7	445394	14	RIVET, Pop, M4.8 x 12.7,
8	84435787	1	SUPPORT,
9	84058861	1	SENSOR,
10	84073180	1	SUPPORT,
11	84071027	1	DISC,
12	337522	1	WASHER, M16 x 56 x 5,
13	140048	1	WASHER, SPRING, Belleville, M16,
14	86585947	1	BOLT, Hex, M16 x 20, 8.8, Full Thd,
15	86639896	1	HARNESS, WIRE, , BSN C281
15	87015663	1	HARNESS, WIRE, , BSN F282347
15	87030360	1	HARNESS, WIRE, , BSN F348419
15	87045784	1	HARNESS, WIRE, , BSN F420481
15	87326652	1	HARNESS, WIRE, , ASN D482

06.35(01) THRESHING FRAME, ELECTRICS - LH

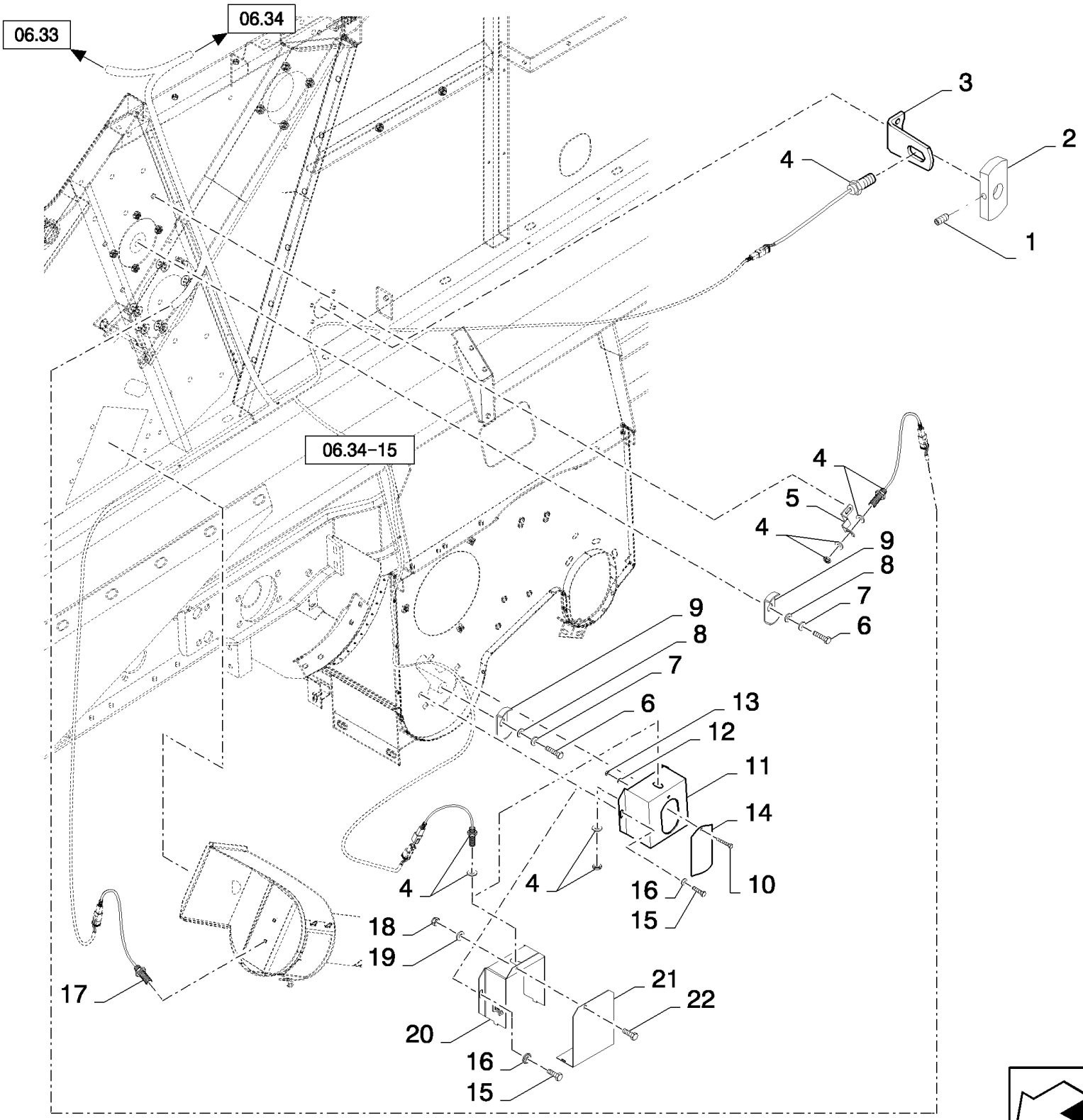

CX880 COMBINE - BASE UNIT (2/01-)

06.35(01) THRESHING FRAME, ELECTRICS - LH

ссылка	Номер детали	Кол-во	Описание
1	120242	1	SET SCREW, Hex Soc, M6 x 10, Cup Pt,
2	84071097	1	DISC,
3	84073182	1	BRACKET,
4	84058861	3	SENSOR,
5	84073179	1	BRACKET,
6	86050286	2	BOLT, Hex Flg, M10 x 20, 8.8,
7	140045	2	WASHER, SPRING, Belleville, M10,
8	140042	2	WASHER, M10 x 34 x 3,
9	84071095	2	DISC,
10	86508568	1	SCREW, Hex, M6 x 16, 8.8, , BSN C387
11	84073636	1	GUARD, , BSN C387
12	9824259	1	WASHER, M6 x 12 x 1.6, , BSN C387
13	353308	1	NUT, M6 x 1, Cl 8, , BSN C387
14	395187	1	COVER, , BSN C387
16	322358	2	WASHER, SPRING, Belleville, M8,
17	84058862	1	SENSOR,
18	15896221	1	NUT, M6, Cl 10, , ASN D388
19	322357	1	WASHER, SPRING, Belleville, M6, , ASN D388
20	87036570	1	COVER, , ASN D388
21	87036591	1	COVER, , ASN D388
22	86508568	1	SCREW, Hex, M6 x 16, 8.8, , ASN D388
15	16043224	2	BOLT, Hex, M8 x 16, 8.8, Full Thd,

06.36(01) RETURN AUGER SENSOR, RH

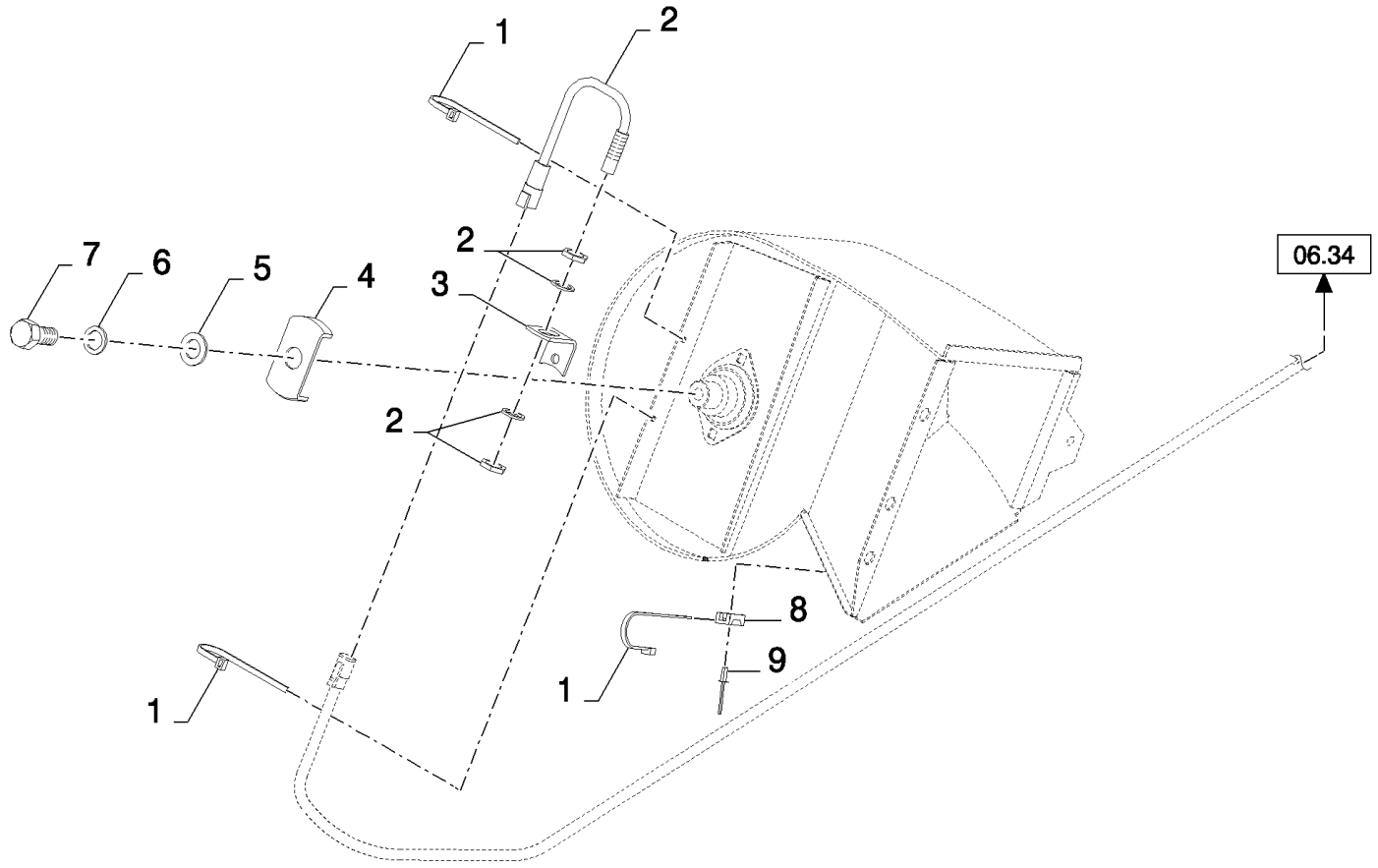

CX880 COMBINE - BASE UNIT (2/01-)

06.36(01) RETURN AUGER SENSOR, RH

ссылка	Номер детали	Кол-во	Описание
1	86566989	3	STRAP, CABLE,
2	84058861	1	SENSOR,
3	84073219	1	BRACKET,
4	84071095	1	DISC,
5	140042	1	WASHER, M10 x 34 x 3,
6	140045	1	WASHER, SPRING, Belleville, M10,
7	86050286	1	BOLT, Hex Flg, M10 x 20, 8.8,
8	86590413	1	CLAMP,
9	445394	1	RIVET, Pop, M4.8 x 12.7,

06.37(01) STRAW WALKER FRAME, ELECTRICAL COMPONENTS

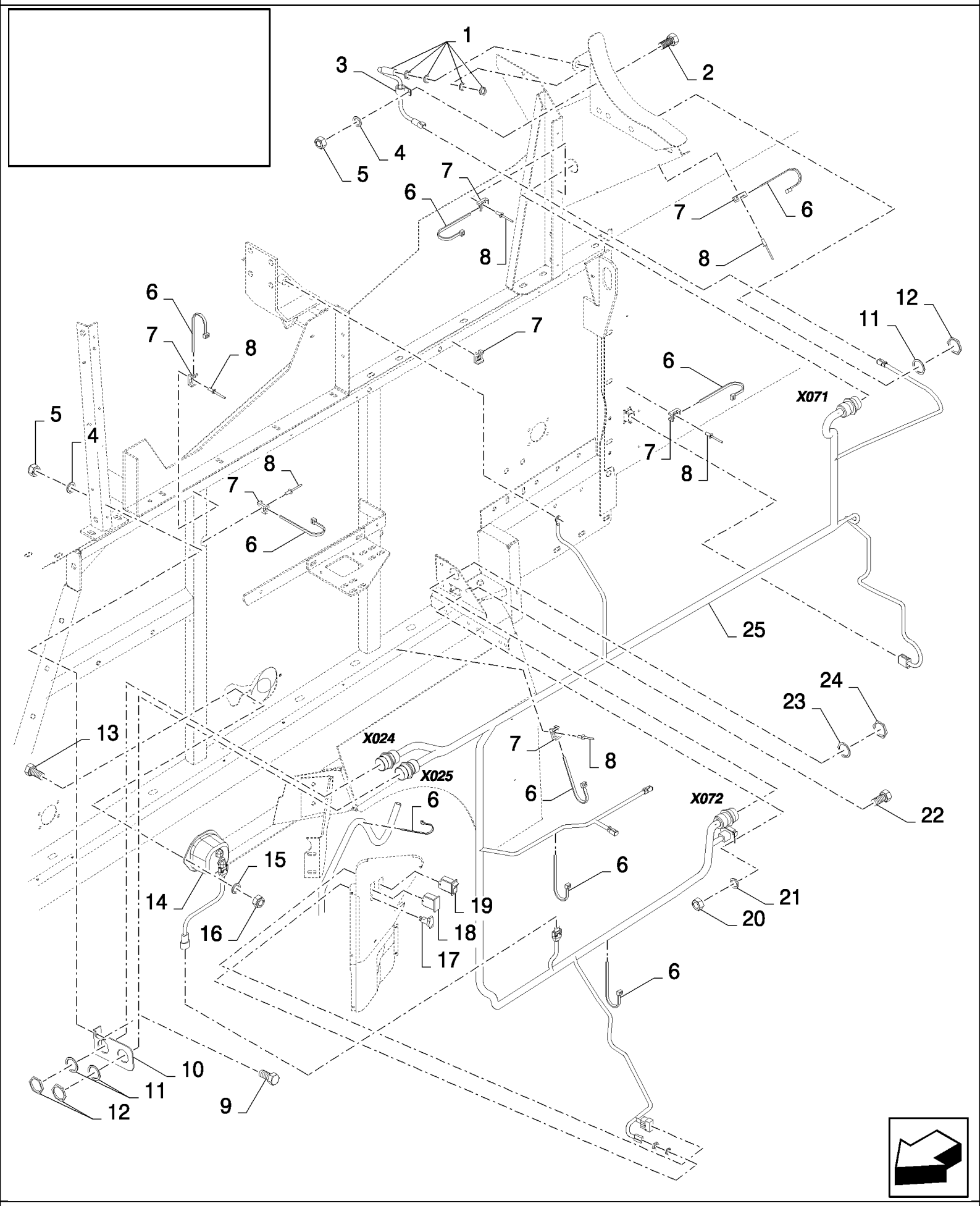

CX880 COMBINE - BASE UNIT (2/01-)

06.37(01) STRAW WALKER FRAME, ELECTRICAL COMPONENTS

ссылка	Номер детали	Кол-во	Описание
1	84058863	1	SENSOR,
2	86508568	1	SCREW, Hex, M6 x 16, 8.8,
3	9837759	1	CLAMP,
4	322357	3	WASHER, SPRING, Belleville, M6,
5	15896221	3	NUT, M6, Cl 10,
6	86566989	AR	STRAP, CABLE,
7	86590413	AR	CLAMP,
8	445394	AR	RIVET, Pop, M4.8 x 12.7,
9	120100	2	BOLT, Hex, M6 x 20, 8.8,
10	84435780	1	SUPPORT,
11	636665	3	WASHER, LOCK,
12	86619907	3	NUT,
13	9706703	2	BOLT, CARRIAGE, Short NK, M6 x 20, Cl8.8, Full Thd,
14	86590412	1	LAMP,
15	86588450	2	WASHER, M6,
16	353308	2	NUT, M6 x 1, Cl 8,
17	82002966	1	SOCKET, POWER,
18	84320263	1	PLUG,
19	84320248	1	SWITCH, LIGHTS, CLEANING SHOE LIGHT
20	385681	4	NUT, LOCK, M4 x .7, Cl 8, M4
21	89824840	4	WASHER, 4MM
22	412255	4	BOLT, Hex, M4 x 20, 8.8, Full Thd,
23	9861349	1	WASHER, LOCK,
24	9861348	1	NUT,
25	86610692	1	HARNESS, WIRE, , BSN C347
25	87030688	1	HARNESS, WIRE, , BSN F348419
25	84457647	1	HARNESS, WIRE, , ASN D420

06.38(01) LOWER FRAME, ELECTRICS

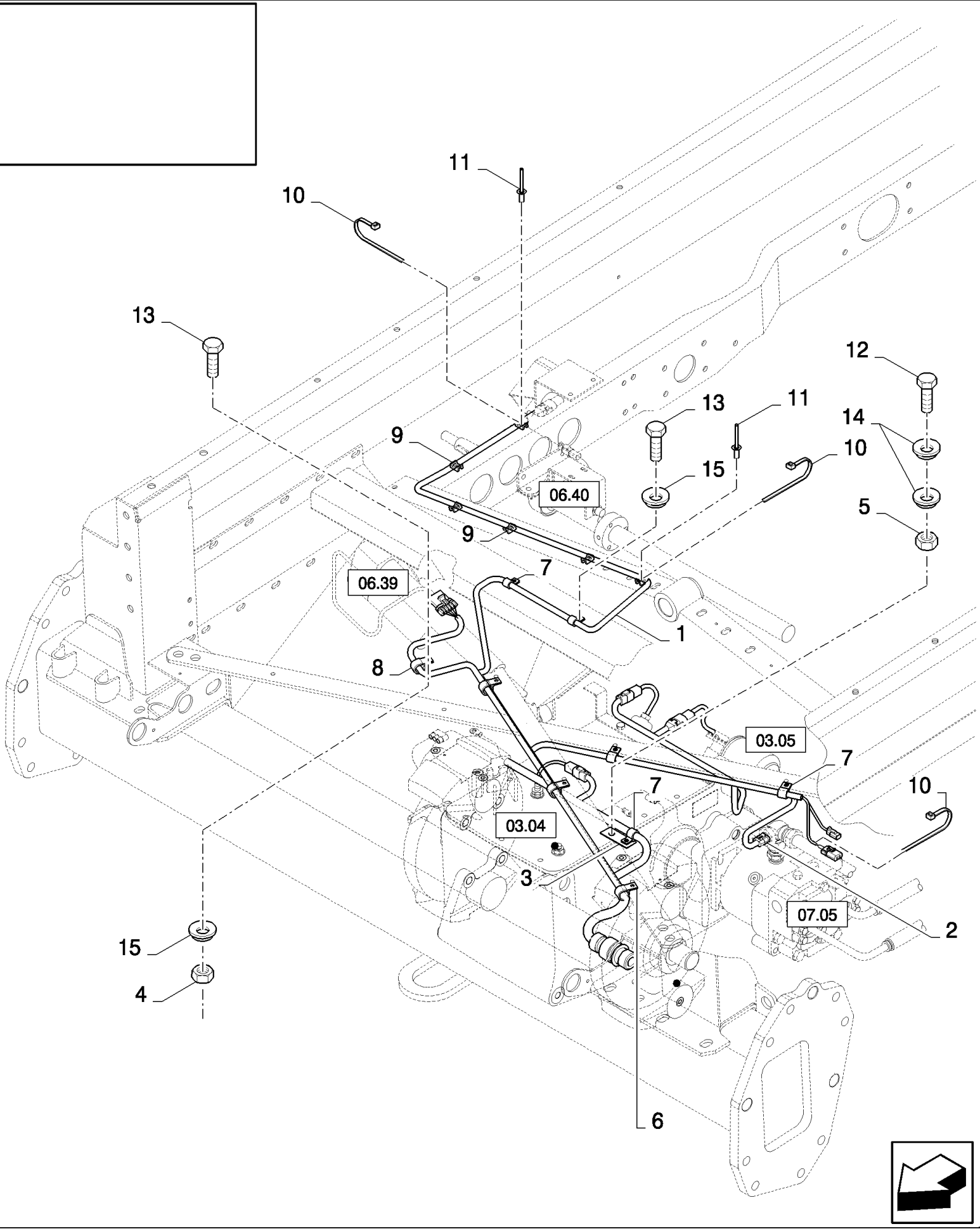

CX880 COMBINE - BASE UNIT (2/01-)

06.38(01) LOWER FRAME, ELECTRICS

ссылка	Номер детали	Кол-во	Описание
1	87015629	1	HARNESS, WIRE,
2	86597586	1	SENSOR,
3	84435328	1	BRACKET,
4	89706690	6	NUT, M8, Cl 8,
5	15896221	1	NUT, M6, Cl 10,
6	9827902	2	CLAMP, 1", Insul, 3/8" Bolt,
7	9706748	3	CLAMP, 5/8", Insul, 5/16" Bolt,
8	619284	3	CLAMP, 15/16", Insul, 3/8" Bolt,
9	86590413	6	CLAMP,
10	86566989	7	STRAP, CABLE,
11	80445395	6	RIVET,
12	86508568	1	SCREW, Hex, M6 x 16, 8.8,
14	322357	2	WASHER, SPRING, Belleville, M6,
15	322358	8	WASHER, SPRING, Belleville, M8,
13	16043224	8	BOLT, Hex, M8 x 16, 8.8, Full Thd,

06.39(01) SELF LEVELLING, ACTUATOR AND SENSOR

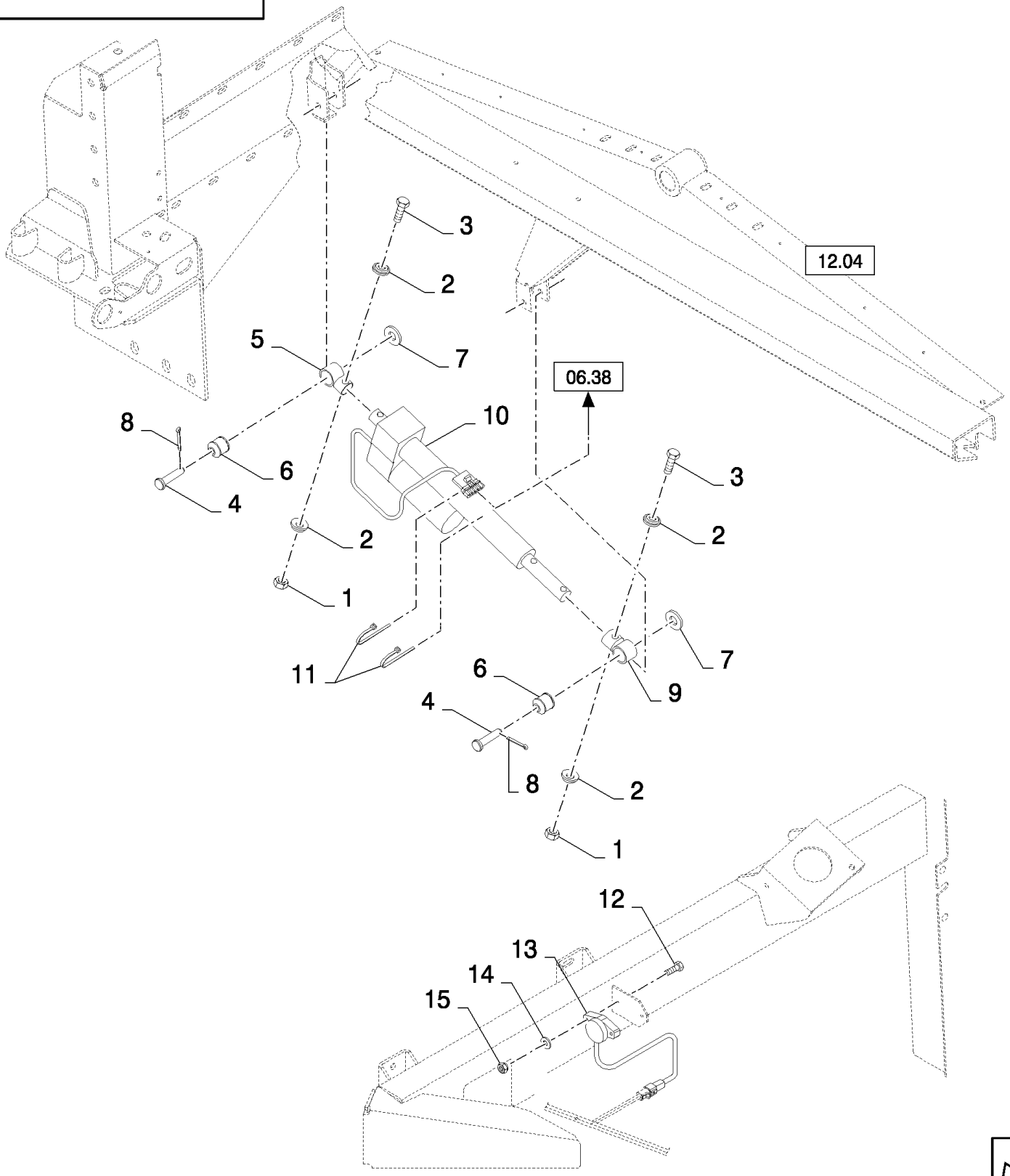

CX880 COMBINE - BASE UNIT (2/01-)

06.39(01) SELF LEVELLING, ACTUATOR AND SENSOR

ссылка	Номер детали	Кол-во	Описание
1	100038	2	NUT, M12 x 1.75, Cl 8,
2	140046	4	WASHER, Belleville, M12,
3	300512	2	SCREW, Hex, M12 x 55, 8.8,
4	412118	2	PIN, CLEVIS, M12 x 65,
5	753565	1	CLAMP,
6	445913	2	BUSHING, RUBBER,
7	378245	4	WASHER, M12,
8	130004	2	PIN, SPLIT (COTTER), M3.2 x 25,
9	921250	1	CLAMP,
10	84058067	1	ACTUATOR, , BSN C503
10	87522008	1	ACTUATOR, , ASN D504
11	86566990	2	STRAP, CABLE,
12	385682	2	BOLT, Hex, M4 x 30, 8.8, , BSN C335
12	43117	2	BOLT, Hex, M6 x 30, 8.8, , ASN D336
13	86556530	1	SENSOR, INCLINATION, BSN C335
13	87026294	1	SENSOR, , ASN D336
14	89824840	2	WASHER, 4MM, BSN C335
14	86588450	2	WASHER, M6, , ASN D336
15	385681	2	NUT, LOCK, M4 x .7, Cl 8, M4, BSN C335
15	353308	2	NUT, M6 x 1, Cl 8, , ASN D336

06.40(01) BLOWER SPEED SENSOR

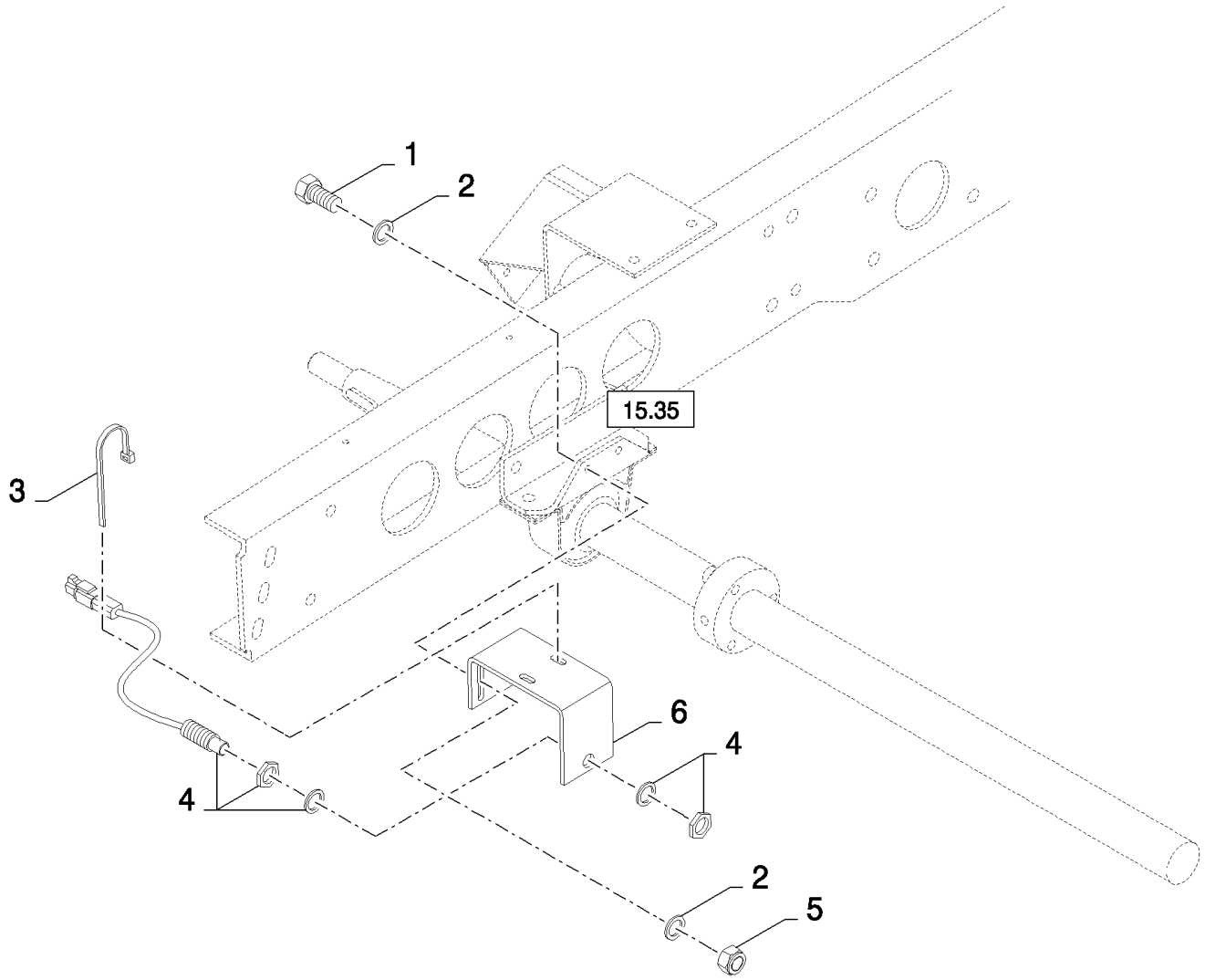

CX880 COMBINE - BASE UNIT (2/01-)

06.40(01) BLOWER SPEED SENSOR

ссылка	Номер детали	Кол-во	Описание
1	86508568	2	SCREW, Hex, M6 x 16, 8.8,
2	322357	4	WASHER, SPRING, Belleville, M6,
3	86566989	1	STRAP, CABLE,
4	84058861	1	SENSOR,
5	15896221	2	NUT, M6, Cl 10,
6	84989682	1	SUPPORT, , FOR CX720, CX740, CX760, CX780 ONLY
6	84989334	1	SUPPORT, , FOR CX820, CX840, CX860, CX880 ONLY

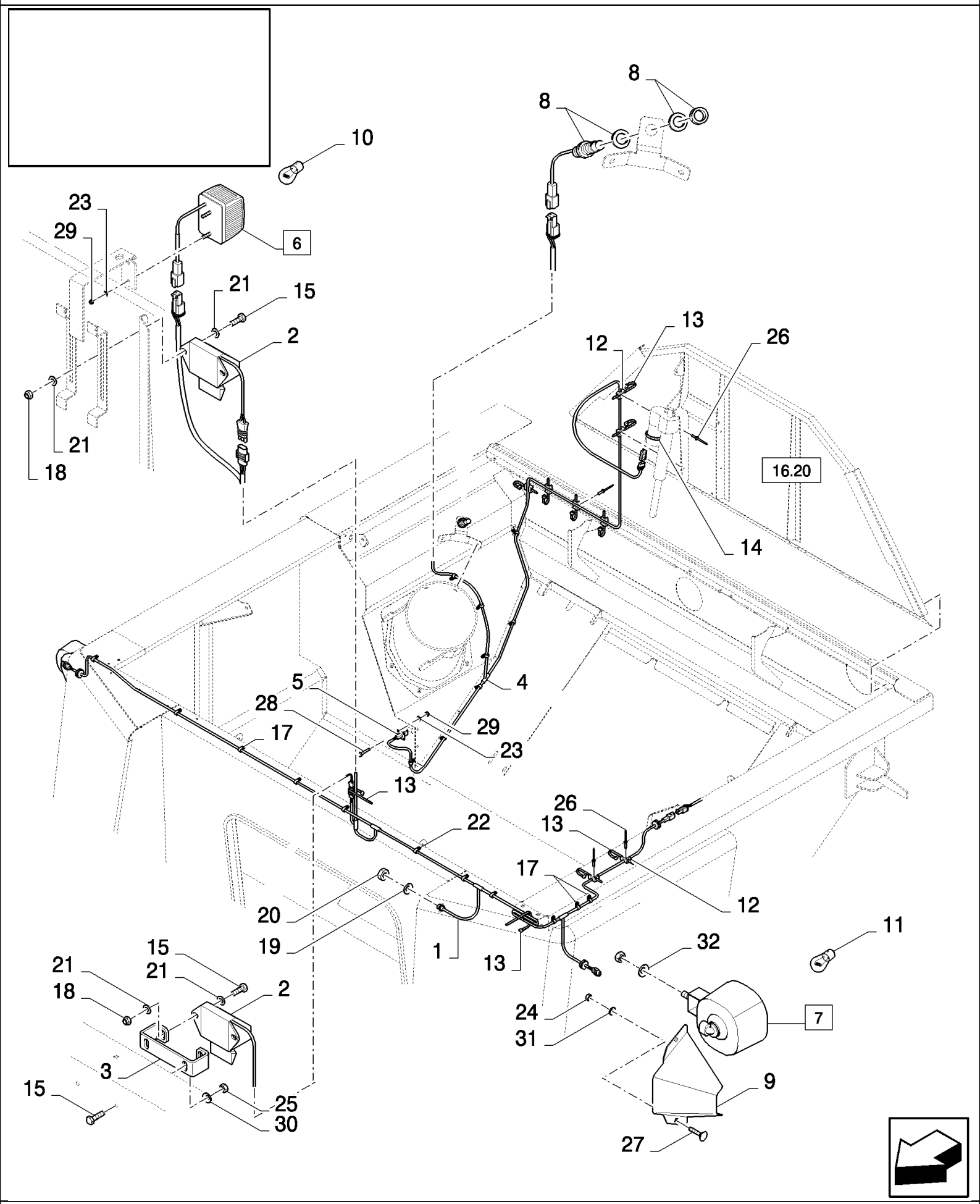
8
8
10
23
29
6
21
15
2
13
12
26
21
18
16.20
14
5
28
4
29
17
23
13
26
22
13
17
12
20
19
1
13
11
32
15
21
21
18
2
24
7
31
3
9
15
25
30
27

CX880 COMBINE - BASE UNIT (2/01-)

06.41(01) GRAINTANK, ELECTRICITY

ссылка	Номер детали	Кол-во	Описание
1	86900853	1	HARNESS, WIRE,
2	86626239	2	SWITCH,
3	84439472	1	SUPPORT,
4	86616162	1	HARNESS, WIRE, , WITH GRAINTANK COVERS ONLY
5	86837473	1	CONNECTOR, WIRE, , WITH GRAINTANK EXTENSIONS ONLY
6	86525547	1	LAMP, (10), BSN C495
6	87350858	1	LAMP, (10), ASN D496
7	86525513	2	LAMP, (11)
8	84058863	1	SENSOR, , WITH GRAINTANK COVERS ONLY
9	84442474	2	SHIELD,
10	398877	1	BULB, , BSN C495
10	87350857	1	LAMP, , ASN D496
11	9847312	1	BULB,
12	86590413	11	CLAMP,
13	86566989	14	STRAP, CABLE,
14	86566990	1	STRAP, CABLE,
16	100016	2	NUT, M10, Cl 8,
17	86010402	16	CLAMP, 1/2", Insul, 3/8" Bolt,
18	86629542	4	NUT, LOCK, M8 x 1.25, Cl 8,
19	9861349	1	WASHER, LOCK,
20	9861348	1	NUT,
21	140016	8	WASHER, M8 x 16 x 1.6,
22	9837692	3	CLAMP,
23	89824840	6	WASHER, 4MM
24	15896221	4	NUT, M6, Cl 10,
25	89706690	2	NUT, M8, Cl 8,
26	445394	11	RIVET, Pop, M4.8 x 12.7,
27	412298	4	BOLT, CARRIAGE, Short NK, M6 x 16, Cl8.8, Full Thd,
28	412255	4	BOLT, Hex, M4 x 20, 8.8, Full Thd,
29	385681	6	NUT, LOCK, M4 x .7, Cl 8, M4
30	322358	2	WASHER, SPRING, Belleville, M8,
31	322357	4	WASHER, SPRING, Belleville, M6,
32	140045	2	WASHER, SPRING, Belleville, M10,
15	16043224	6	BOLT, Hex, M8 x 16, 8.8, Full Thd,

06.42(01) SIGNAL PLATES FOR UNLOADING TUBE

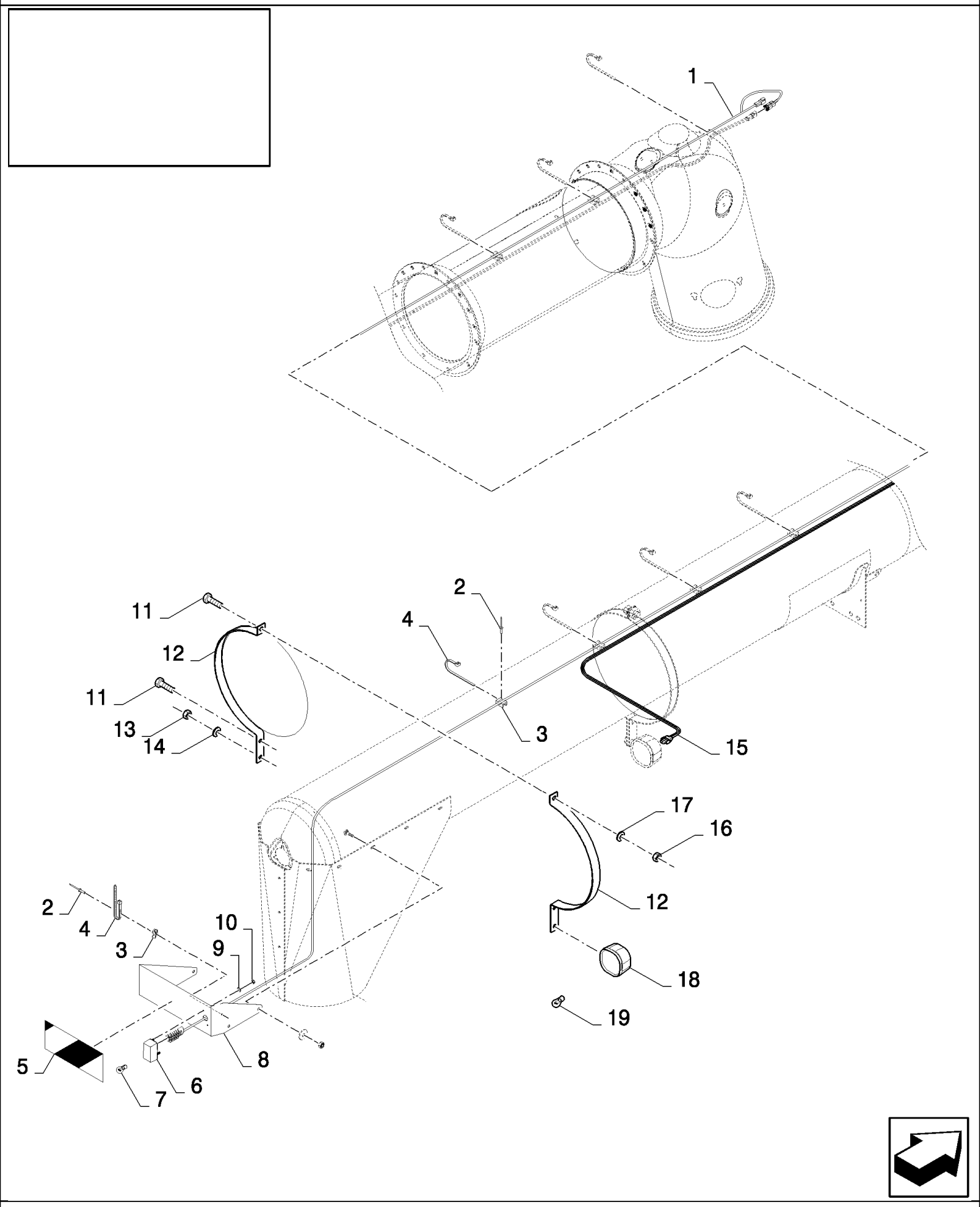

CX880 COMBINE - BASE UNIT (2/01-)

06.42(01) SIGNAL PLATES FOR UNLOADING TUBE

ссылка	Номер детали	Кол-во	Описание
1	86610718	1	HARNESS, WIRE,
2	325911	2	RIVET, Pop, M4.8 x 7.4,
3	86590413	AR	CLAMP,
4	86566989	2	STRAP, CABLE,
5	84441358	1	DECAL, , BSN C371
5	84441358	3	DECAL, , ASN D372
6	84429842	1	LAMP, (7)
7	86616250	1	BULB, #W5W, 5w, 12V-5W
8	84441194	1	SUPPORT, , BSN C371
8	84452652	1	SUPPORT, , ASN D372
9	140014	2	WASHER, M5 x 10 x 1,
10	80043440	2	NUT, LOCK, M5 x .8, Cl 8, M5
11	43139	2	SCREW, Hex, M10 x 25, 8.8, Full Thd, M10x25
12	84072630	2	SUPPORT,
13	89706690	1	NUT, M8, Cl 8,
14	322358	1	WASHER, SPRING, Belleville, M8,
15	86521782	1	HARNESS, WIRE, , BSN C281
15	86900852	1	HARNESS, WIRE, , ASN D282
16	100016	2	NUT, M10, Cl 8,
17	140045	2	WASHER, SPRING, Belleville, M10,
18	84067907	1	LAMP, WORK, (19)
19	9847313	1	BULB, #894, 12V, 37.5W,

06.43(01) STRAW WALKER DETECTOR

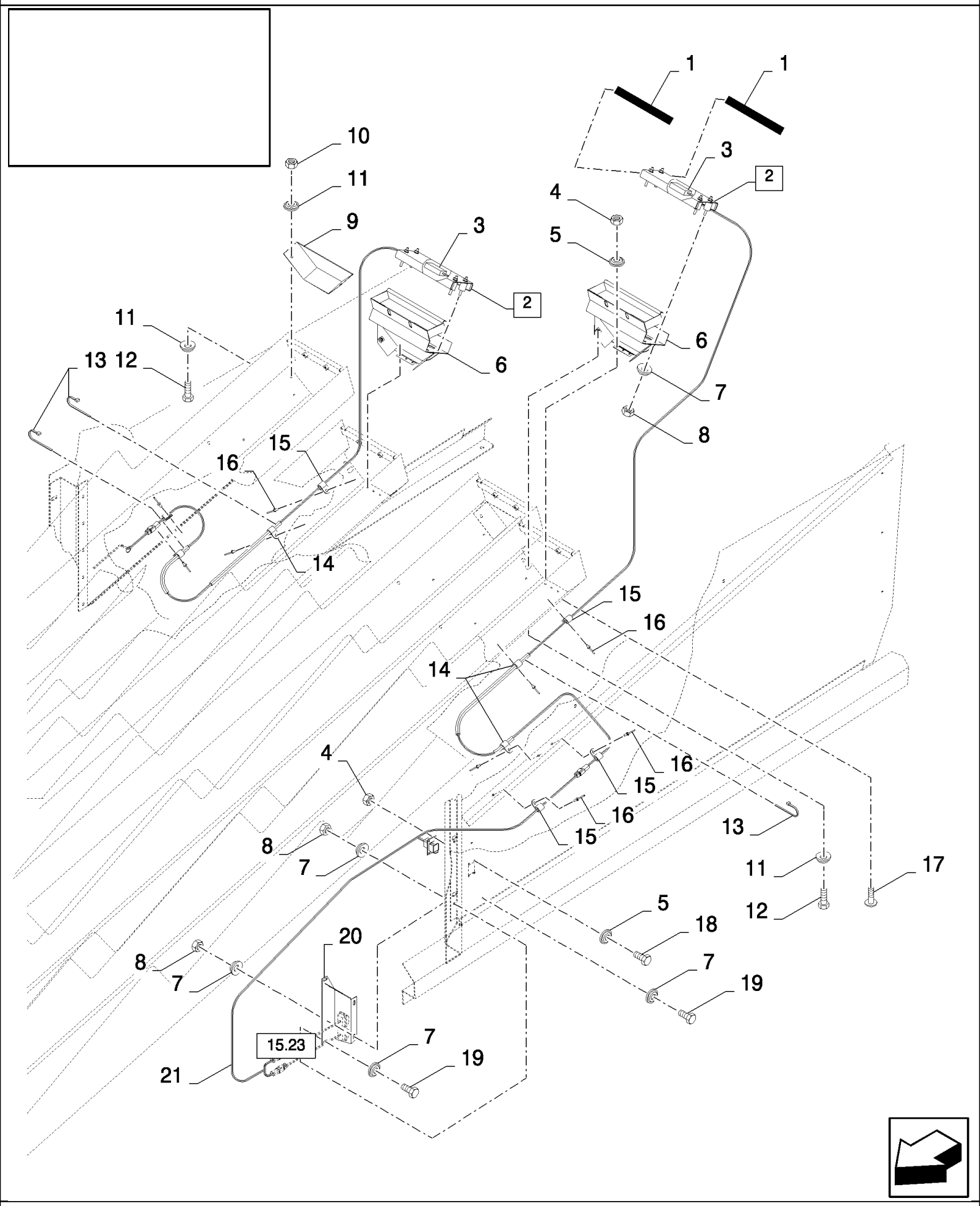

CX880 COMBINE - BASE UNIT (2/01-)

06.43(01) STRAW WALKER DETECTOR

ссылка	Номер детали	Кол-во	Описание
1	80401278	AR	SEAL,
2	86579531	2	DETECTOR, (3)
3	84000257	1	SENSOR,
4	100012	10	NUT, M4, Cl 8,
5	322355	10	WASHER, Belleville, M4,
6	84017737	2	HOLDER,
7	322357	16	WASHER, SPRING, Belleville, M6,
8	15896221	12	NUT, M6, Cl 10,
9	84042926	3	PLATE, COVER, , FOR CX720, CX740, CX760, CX780 ONLY
9	84042926	4	PLATE, COVER, , FOR CX820, CX840, CX860, CX880 ONLY
10	89706690	AR	NUT, M8, Cl 8,
11	322358	AR	WASHER, SPRING, Belleville, M8,
13	86566989	4	STRAP, CABLE,
14	9706748	4	CLAMP, 5/8", Insul, 5/16" Bolt,
15	431352	5	CLAMP,
16	9512290	9	RIVET,
17	86511042	6	SCREW, Cross Pan Hd, M4 x 16,
18	412255	4	BOLT, Hex, M4 x 20, 8.8, Full Thd,
19	86508568	4	SCREW, Hex, M6 x 16, 8.8,
20	86977954	1	SUPPORT, , BSN C347
20	84452006	1	SUPPORT, , ASN D348
21	86616168	1	HARNESS, WIRE,
12	16043224	AR	BOLT, Hex, M8 x 16, 8.8, Full Thd,

06.44(01) PERFORMANCE DETECTOR ON SHAKER SHOE

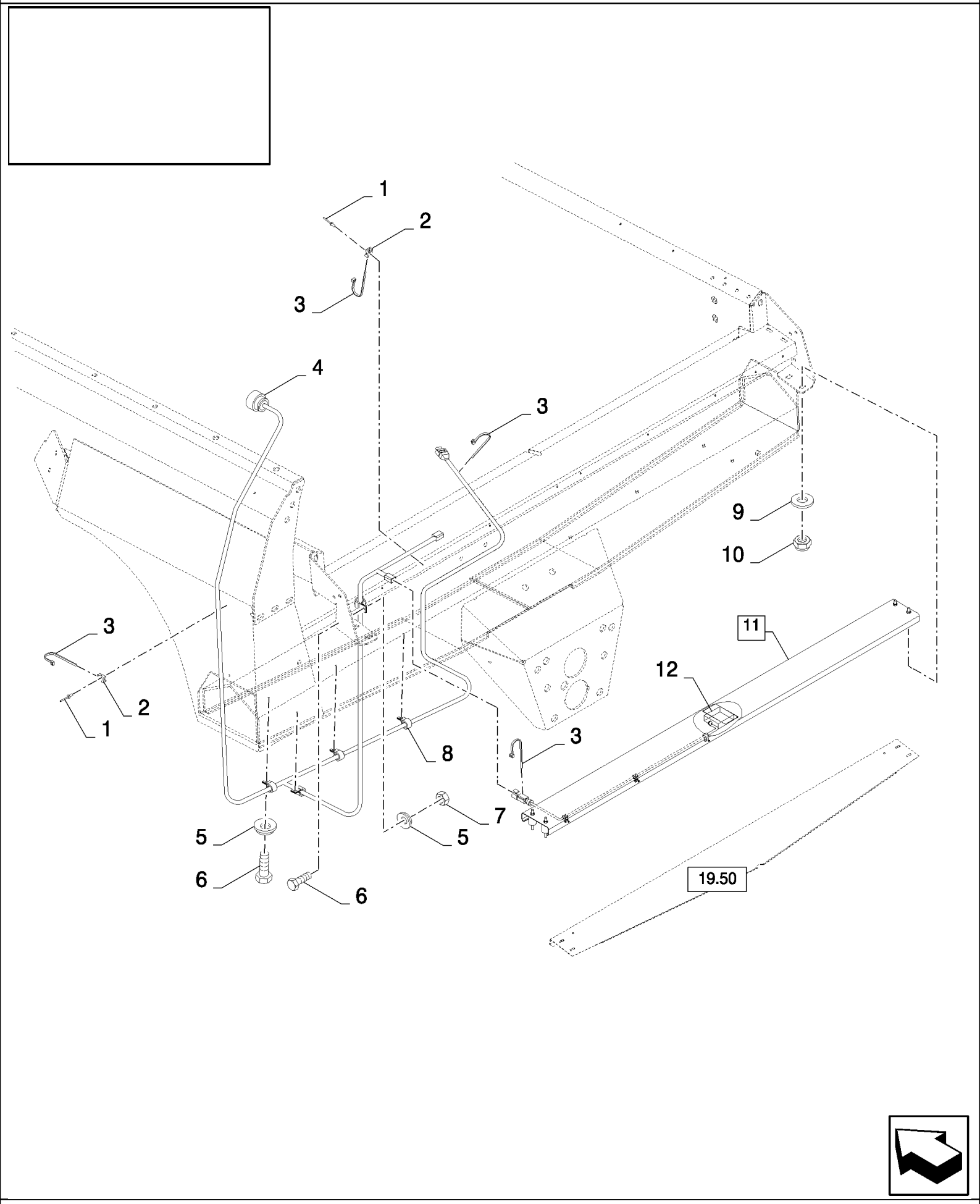

CX880 COMBINE - BASE UNIT (2/01-)

06.44(01) PERFORMANCE DETECTOR ON SHAKER SHOE

ссылка	Номер детали	Кол-во	Описание
1	445394	AR	RIVET, Pop, M4.8 x 12.7,
2	86590413	AR	CLAMP,
3	86566989	AR	STRAP, CABLE,
4	86900861	1	HARNESS, WIRE, , FOR CX720, CX740, CX760, CX780 ONLY
4	86900862	1	HARNESS, WIRE, , FOR CX820, CX840, CX860, CX880 ONLY
5	322357	5	WASHER, SPRING, Belleville, M6,
6	86508568	5	SCREW, Hex, M6 x 16, 8.8,
7	15896221	1	NUT, M6, Cl 10,
8	619284	5	CLAMP, 15/16", Insul, 3/8" Bolt,
9	9824259	4	WASHER, M6 x 12 x 1.6,
10	353308	4	NUT, M6 x 1, Cl 8,
11	86579535	1	DETECTOR, (12), FOR CX720, CX740, CX760, CX780 ONLY
11	86579534	1	DETECTOR, (12), FOR CX820, CX840, CX860, CX880 ONLY
12	84000257	1	SENSOR,

06.45(01) STRAW WALKER : PROTECTION

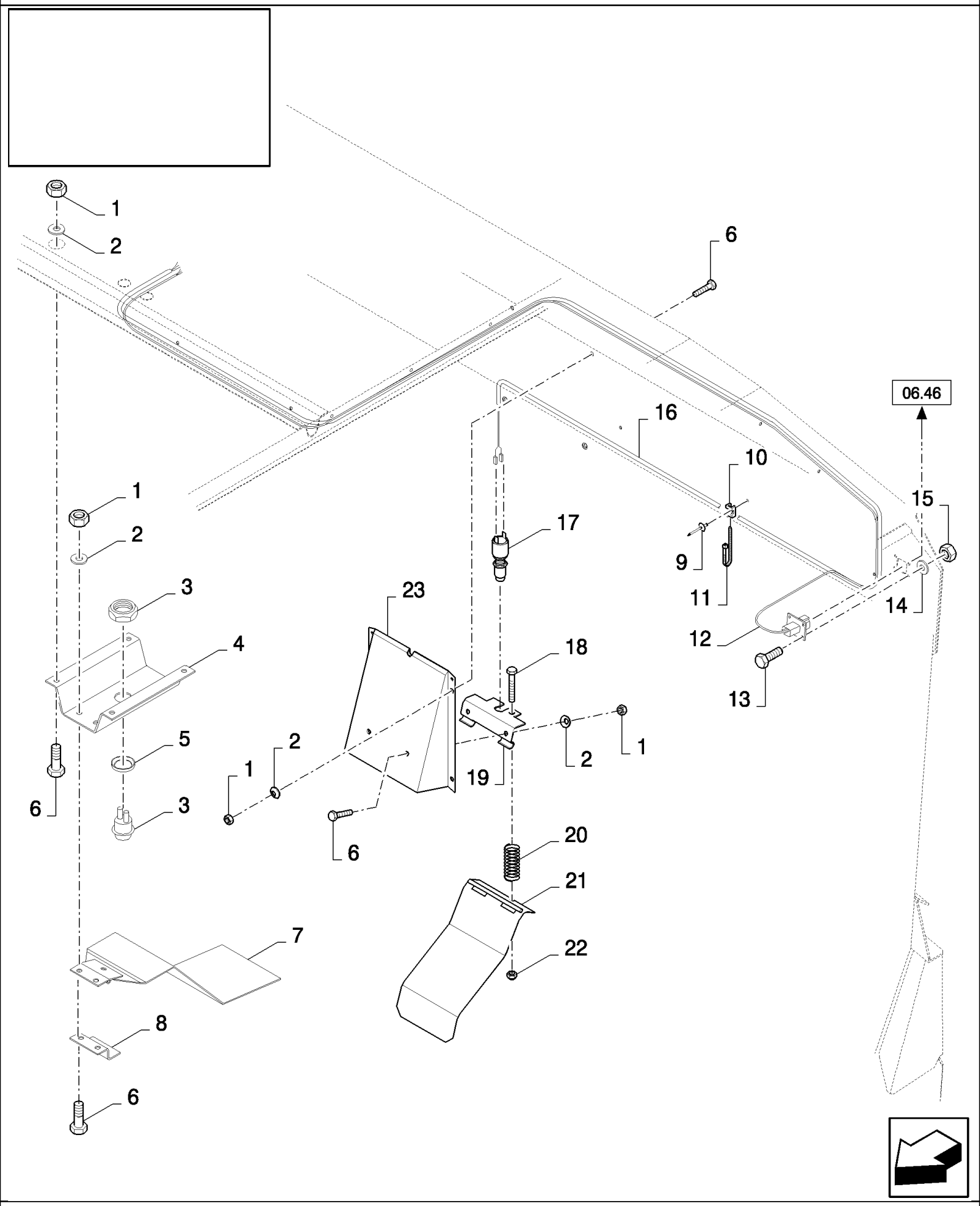

CX880 COMBINE - BASE UNIT (2/01-)

06.45(01) STRAW WALKER : PROTECTION

ссылка	Номер детали	Кол-во	Описание
1	15896221	12	NUT, M6, Cl 10,
2	322357	12	WASHER, SPRING, Belleville, M6,
3	335378	1	SWITCH,
4	417792	1	SUPPORT,
5	397986	1	CUP,
6	86508568	12	SCREW, Hex, M6 x 16, 8.8,
7	417790	1	SUPPORT,
8	417793	1	SUPPORT,
9	445394	12	RIVET, Pop, M4.8 x 12.7,
10	86590413	12	CLAMP,
11	86566989	20	STRAP, CABLE,
12	86610694	1	HARNESS, WIRE, , FOR CX820, CX840, CX860, CX880 ONLY, BSN C281
12	86900855	1	HARNESS, WIRE, , FOR CX820, CX840, CX860, CX880 ONLY, ASN D282
12	86610694	1	HARNESS, WIRE, , FOR CX720, CX740, CX760, CX780 ONLY, BSN C285
12	86900855	1	HARNESS, WIRE, , FOR CX720, CX740, CX760, CX780 ONLY, ASN D286
13	412255	4	BOLT, Hex, M4 x 20, 8.8, Full Thd,
14	322355	4	WASHER, Belleville, M4,
15	100012	4	NUT, M4, Cl 8,
16	86610715	1	HARNESS, WIRE,
17	89818685	1	SWITCH,
18	120056	1	SCREW, Hex, M6 x 50, 8.8,
19	84015986	1	HINGE,
20	84005450	1	SPRING,
21	84015983	1	PLATE, COVER,
22	353308	1	NUT, M6 x 1, Cl 8,
23	84015987	1	SUPPORT,

06.46(01) CABLE HARNESS, STRAWHOOD

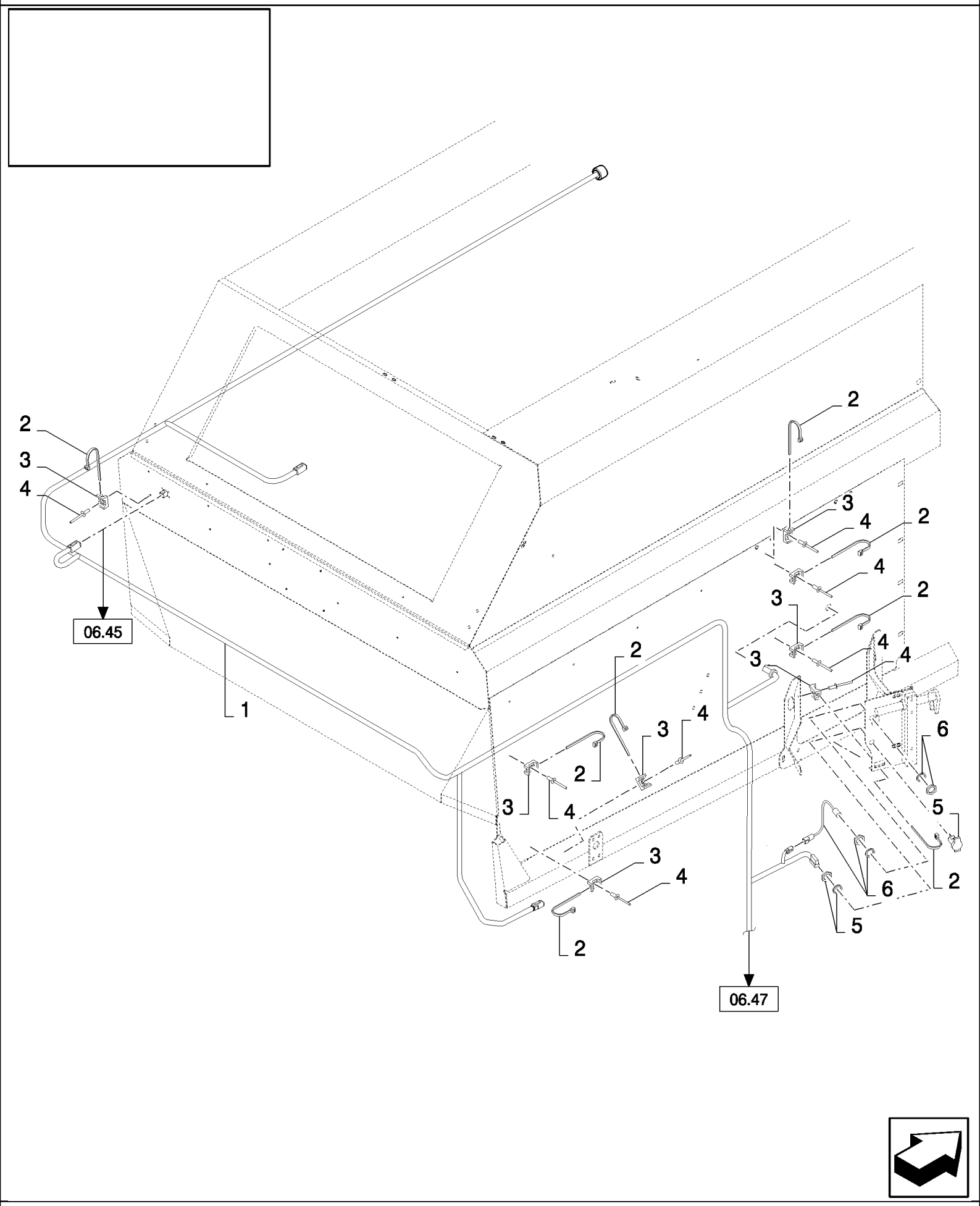

CX880 COMBINE - BASE UNIT (2/01-)

06.46(01) CABLE HARNESS, STRAWHOOD

ссылка	Номер детали	Кол-во	Описание
1	86610693	1	HARNESS, WIRE, , BSN C347
1	87030363	1	HARNESS, WIRE, , BSN F348419
1	84457635	1	HARNESS, WIRE, , BSN F420507
1	87528638	1	HARNESS, WIRE, , ASN D508
2	86566989	AR	STRAP, CABLE,
3	86590413	AR	CLAMP,
4	445394	AR	RIVET, Pop, M4.8 x 12.7,
5	82002966	1	SOCKET, POWER, 12V, BSN C419
6	84058863	1	SENSOR, SERVICE STEP

06.47(01) STRAW CHOPPER, ELECTRICAL COMPONENTS

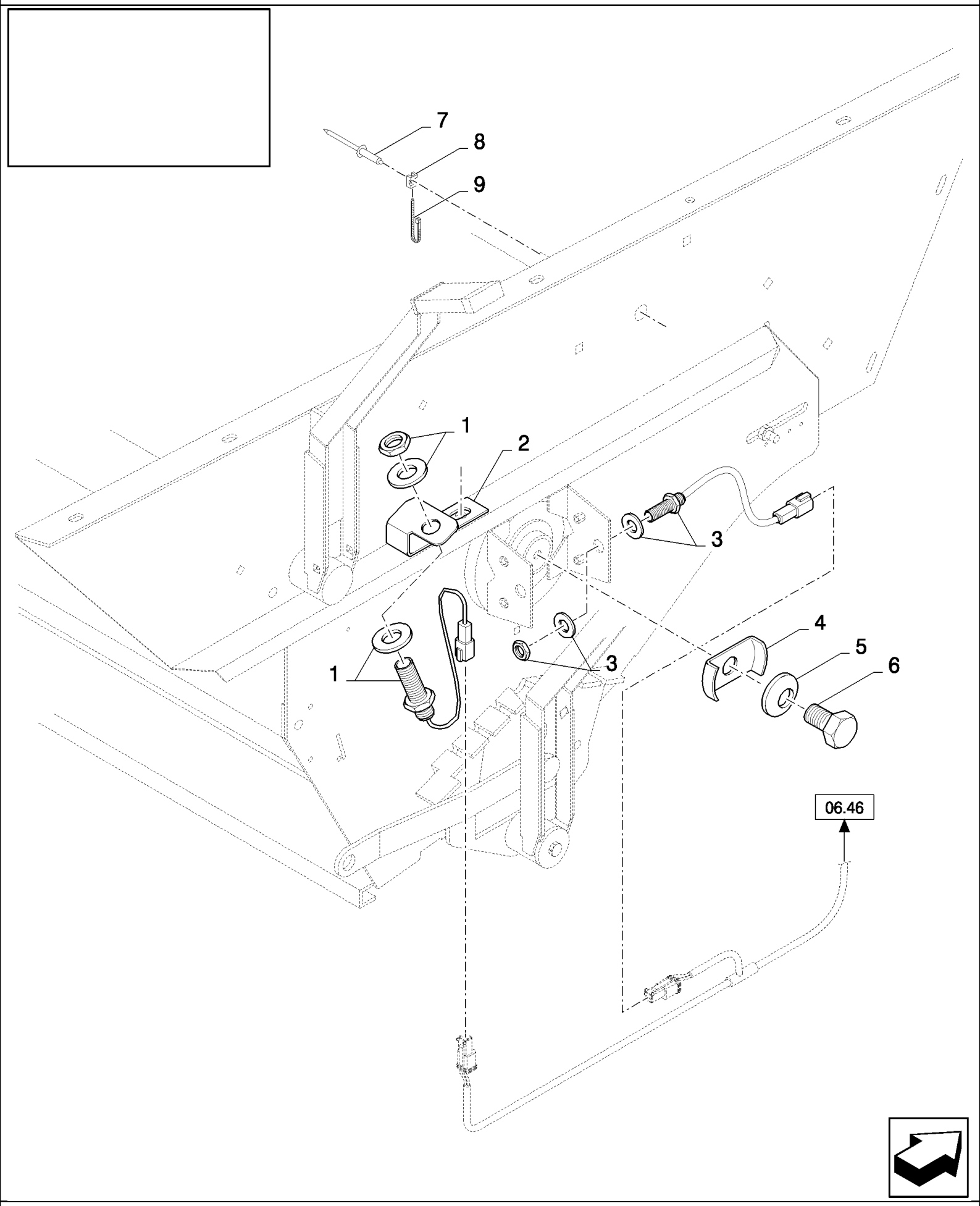

CX880 COMBINE - BASE UNIT (2/01-)

06.47(01) STRAW CHOPPER, ELECTRICAL COMPONENTS

ссылка	Номер детали	Кол-во	Описание
1	84058863	1	SENSOR,
2	84435621	1	BRACKET,
3	84058861	1	SENSOR,
4	84071095	1	DISC,
5	140045	1	WASHER, SPRING, Belleville, M10,
6	86050286	1	BOLT, Hex Flg, M10 x 20, 8.8,
7	445394	5	RIVET, Pop, M4.8 x 12.7,
8	86590413	5	CLAMP,
9	86566989	5	STRAP, CABLE,

06.48(01) ELECTRICS ON HITCH

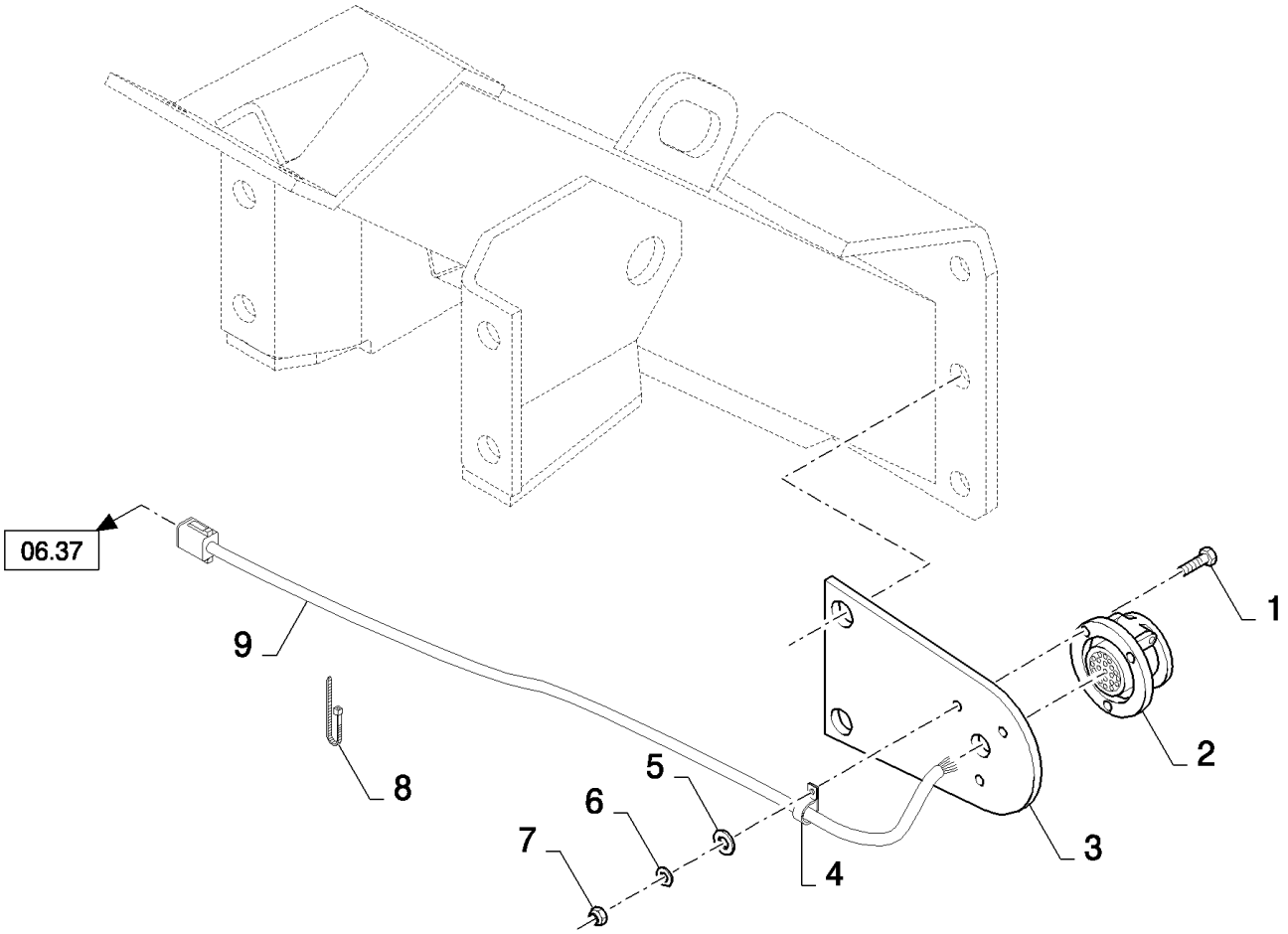

CX880 COMBINE - BASE UNIT (2/01-)

06.48(01) ELECTRICS ON HITCH

ссылка	Номер детали	Кол-во	Описание
1	86585708	3	SCREW, Cross Pan Hd, M4 x 40,
2	398224	1	SOCKET, POWER,
2	265927	1	SOCKET, POWER, , FOR NA ONLY
3	84432533	1	BRACKET,
3	86837475	1	BRACKET, , FOR NA ONLY
4	9706748	2	CLAMP, 5/8", Insul, 5/16" Bolt,
5	86588450	1	WASHER, M6,
6	89824840	3	WASHER, 4MM
7	385681	3	NUT, LOCK, M4 x .7, Cl 8, M4
8	86566989	7	STRAP, CABLE,
9	86604178	1	HARNESS, WIRE,

06.49(01) COOLANT HEATER

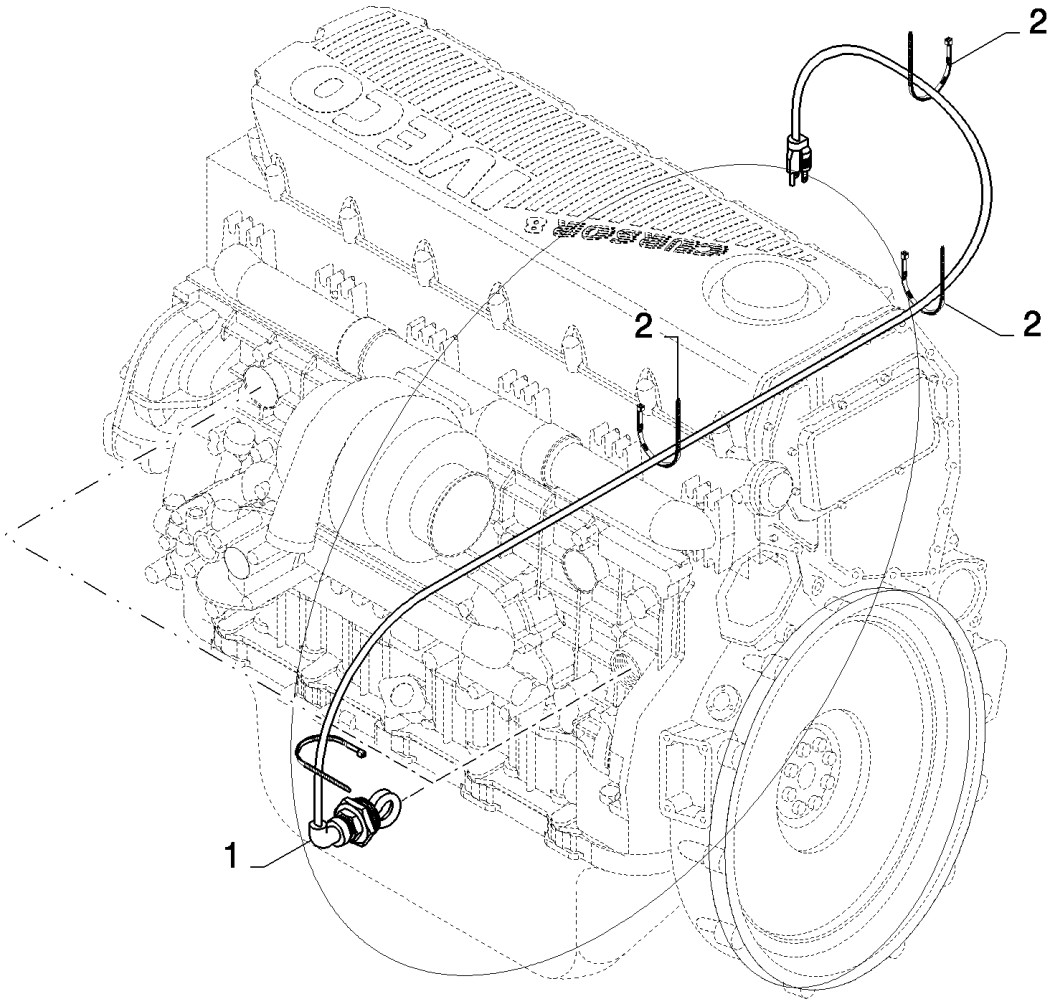

CX880 COMBINE - BASE UNIT (2/01-)

06.49(01) COOLANT HEATER

ссылка	Номер детали	Кол-во	Описание
1	84438887	1	HEATER, , FOR CX860 ONLY
1	84438888	1	HEATER, , FOR CX880 ONLY
2	86566989	4	STRAP, CABLE,

06.53(01) BATTERY, TRAY AND CABLES

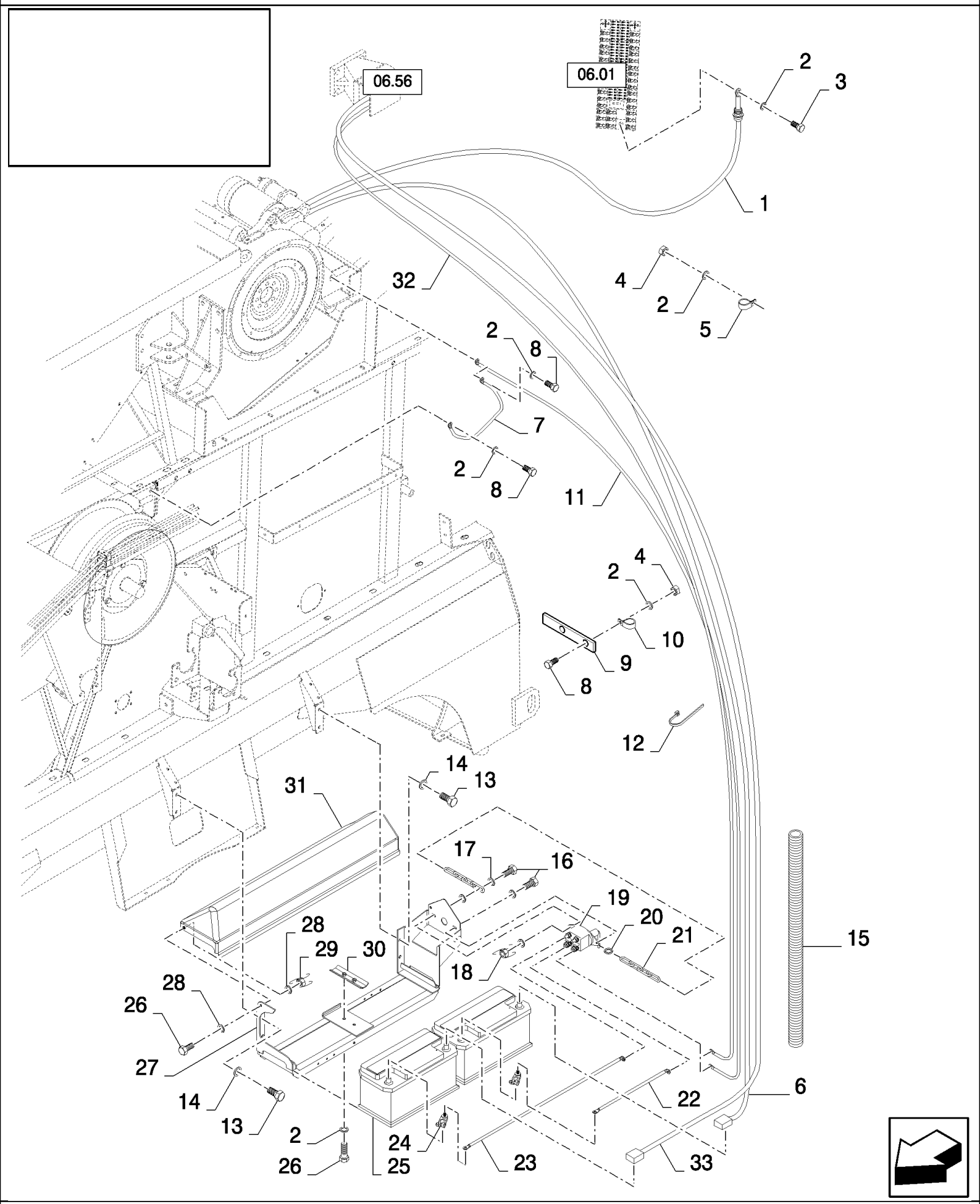

CX880 COMBINE - BASE UNIT (2/01-)

06.53(01) BATTERY, TRAY AND CABLES

ссылка	Номер детали	Кол-во	Описание
1	84435752	1	CABLE, , FOR 3 M VERSION OF CX860 ONLY, BSN C419
1	84449410	1	CABLE, , FOR 3 M VERSION OF CX860 ONLY, ASN D420
1	84437620	1	CABLE, , BSN C419
1	84449411	1	CABLE, , ASN D420
2	322358	AR	WASHER, SPRING, Belleville, M8,
4	89706690	AR	NUT, M8, Cl 8,
5	619284	AR	CLAMP, 15/16", Insul, 3/8" Bolt,
6	84435748	1	CABLE, , BSN C419
6	84449406	1	CABLE, , ASN D420
7	84435753	1	CABLE,
8	120104	4	SCREW, Hex, M8 x 20, 8.8,
8	43128	1	BOLT, Hex, M8 x 30, 8.8,
9	84435608	1	BRACKET,
10	86628564	3	CLAMP, 1 1/4", Insul, 3/8" Bolt,
11	84435754	1	CABLE,
12	86566990	AR	STRAP, CABLE,
13	43139	4	SCREW, Hex, M10 x 25, 8.8, Full Thd, M10x25
14	140045	4	WASHER, SPRING, Belleville, M10,
15	NS	AR	NOT SERVICED, HOSE
16	120100	2	BOLT, Hex, M6 x 20, 8.8,
17	322357	5	WASHER, SPRING, Belleville, M6,
18	15896221	2	NUT, M6, Cl 10,
19	84005283	1	BATTERY CUT-OUT, , BSN C419
19	84004375	1	SWITCH, , ASN D420
20	NSS	1	NOT SERVICED SEPARATELY,
21	539289	1	CHAIN,
22	84435751	1	CABLE,
23	84435750	1	CABLE, , BSN C419
23	84457708	1	CABLE, , ASN D420
24	86606349	2	CONNECTOR, WIRE,
25	NS	2	NOT SERVICED, BATTERY
26	43129	4	BOLT, Hex, M8 x 40, 8.8,
27	84434219	1	SUPPORT,
28	140016	4	WASHER, M8 x 16 x 1.6,
29	86629542	2	NUT, LOCK, M8 x 1.25, Cl 8,
30	84989749	1	PLATE, RETAINING,
31	84989467	1	COVER,
32	84435749	1	CABLE, , BSN C419
32	84449425	1	CABLE, , ASN D420
33	84435747	1	CABLE, , BSN C419
33	84449408	1	CABLE, , ASN D420
3	16043224	1	BOLT, Hex, M8 x 16, 8.8, Full Thd,

06.54(01) GEARBOX HARNESS

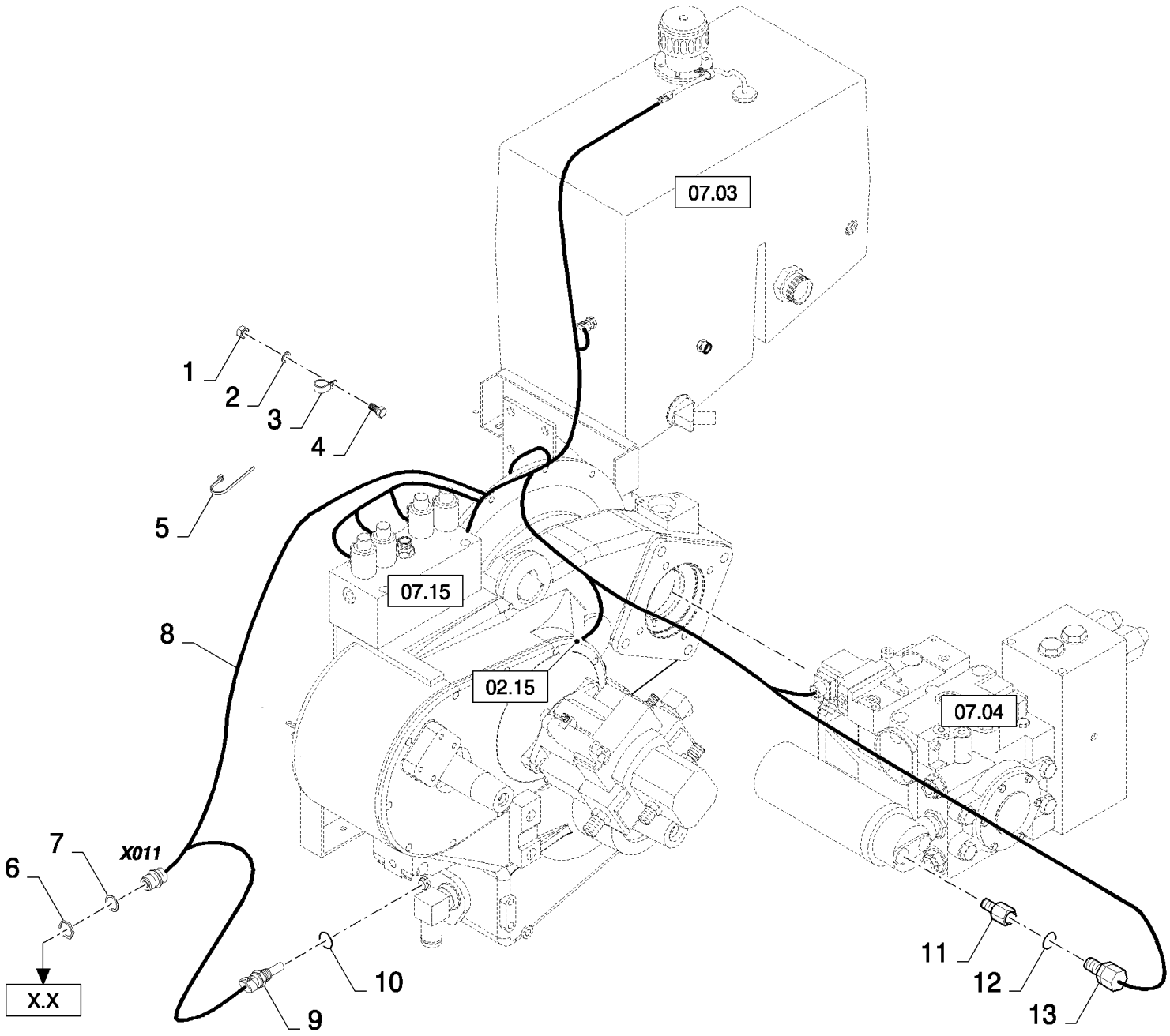

CX880 COMBINE - BASE UNIT (2/01-)

06.54(01) GEARBOX HARNESS

ссылка	Номер детали	Кол-во	Описание
1	15896221	AR	NUT, M6, Cl 10,
2	322357	AR	WASHER, SPRING, Belleville, M6,
3	9827902	AR	CLAMP, 1", Insul, 3/8" Bolt,
4	120100	1	BOLT, Hex, M6 x 20, 8.8,
5	86566989	AR	STRAP, CABLE,
6	86619907	1	NUT,
7	636665	1	WASHER, LOCK,
8	86544428	1	HARNESS, WIRE, , FOR CX780, CX820, CX840, CX860, CX880 ONLY, BSN C347
8	86900860	1	HARNESS, WIRE, , FOR CX780, CX820, CX840, CX860, CX880 ONLY, ASN D348
8	86544428	1	HARNESS, WIRE, , FOR CX720, CX740, CX760 ONLY, BSN C315
8	86900860	1	HARNESS, WIRE, , FOR CX720, CX740, CX760 ONLY, ASN D316
9	86571273	1	SENSOR, Temperature, Hydro Motor
10	86598099	1	O-RING, Cl 6, 11.3MM ID x 2.2 Thk,
11	9811374	1	CONNECTOR, HYD.,
12	220049	1	WASHER, SEALING,
13	434529	1	SENDER UNIT, Charge Pressure

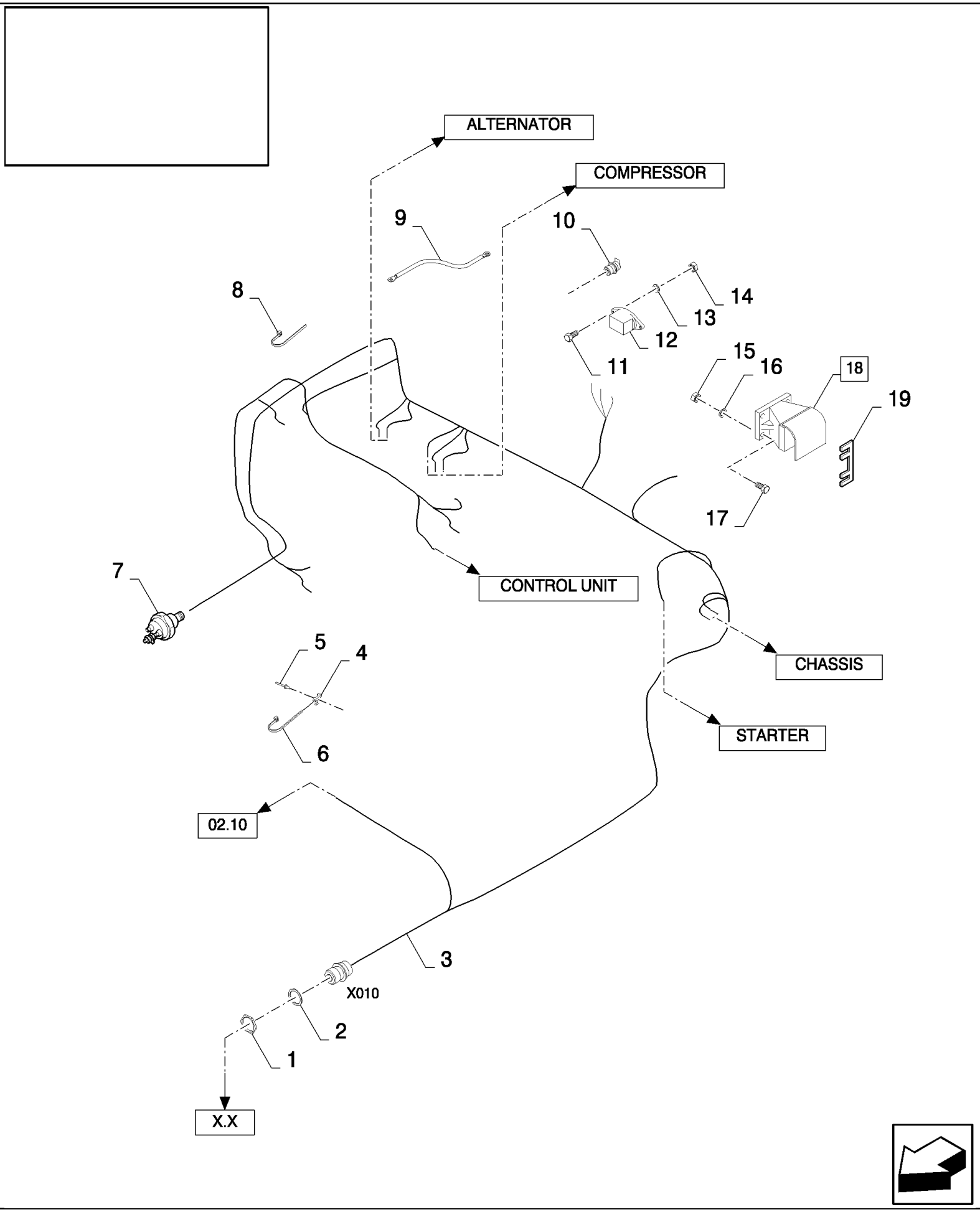
ALTERNATOR
COMPRESSOR
9
10
8
14
13
12
11
15
16
18
19
17
7
CONTROL UNIT
5
4
CHASSIS
STARTER
6
02.10
3
X010
2
1
X.X

CX880 COMBINE - BASE UNIT (2/01-)

06.56(01) ENGINE ELECTRICITY

ссылка	Номер детали	Кол-во	Описание
1	86619907	1	NUT,
2	636665	1	WASHER, LOCK,
3	86900275	1	HARNESS, WIRE, , BSN C347
3	87030358	1	HARNESS, WIRE, , BSN F348419
3	87032214	1	HARNESS, WIRE, , BSN F420482
3	87371019	1	HARNESS, WIRE, , ASN D483
4	86590413	AR	CLAMP,
5	80445395	AR	RIVET,
6	86566989	AR	STRAP, CABLE,
7	86604175	1	SENSOR, , IN AIR MANIFOLD, BSN C281
7	87013666	1	SWITCH, RESTRICTION, , IN AIR FILTER, ASN D282
8	86566990	AR	STRAP, CABLE,
9	86611285	1	WIRE, WHITE
9	86611286	1	WIRE, RED
9	86611287	1	WIRE, BLACK
10	82002966	1	SOCKET, POWER,
11	9804255	2	BOLT, Hex Flg, M6 x 16, 8.8,
12	9843767	1	RELAY,
13	86588450	2	WASHER, M6,
14	353308	2	NUT, M6 x 1, Cl 8,
15	89706690	4	NUT, M8, Cl 8,
16	322358	4	WASHER, SPRING, Belleville, M8,
17	43127	4	BOLT, Hex, M8 x 25, 8.8,
18	389120	1	RELAY, (19)
19	420580	2	PLATE, Fuse - 80 Amp

06.57(01) PRINTER

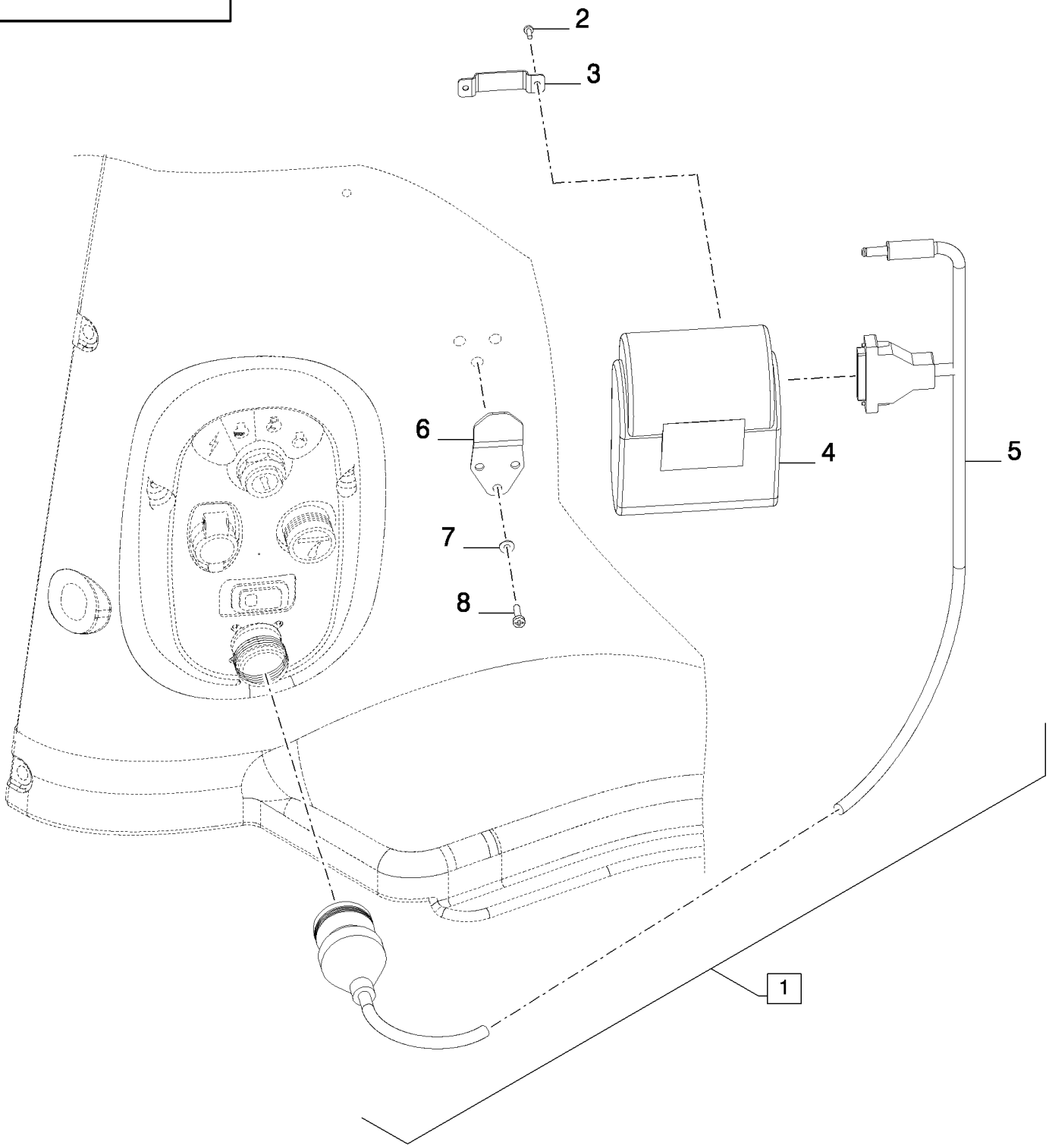

CX880 COMBINE - BASE UNIT (2/01-)

06.57(01) PRINTER

ссылка	Номер детали	Кол-во	Описание
1	84095875	1	PRINTER IN CAB, (2 to 8)
2	86511815	2	SCREW, Cross Pan Hd, M3 x 8, M3x8
3	84444485	1	SUPPORT,
4	84442607	1	Printer,
5	87023084	1	HARNESS, WIRE,
6	84448373	1	HOOK,
7	89824840	3	WASHER,
8	80412475	3	SCREW, M4x16

06.58(01) SMART STEER AUTO-GUIDANCE KIT - EDGE DETECTION SENSOR

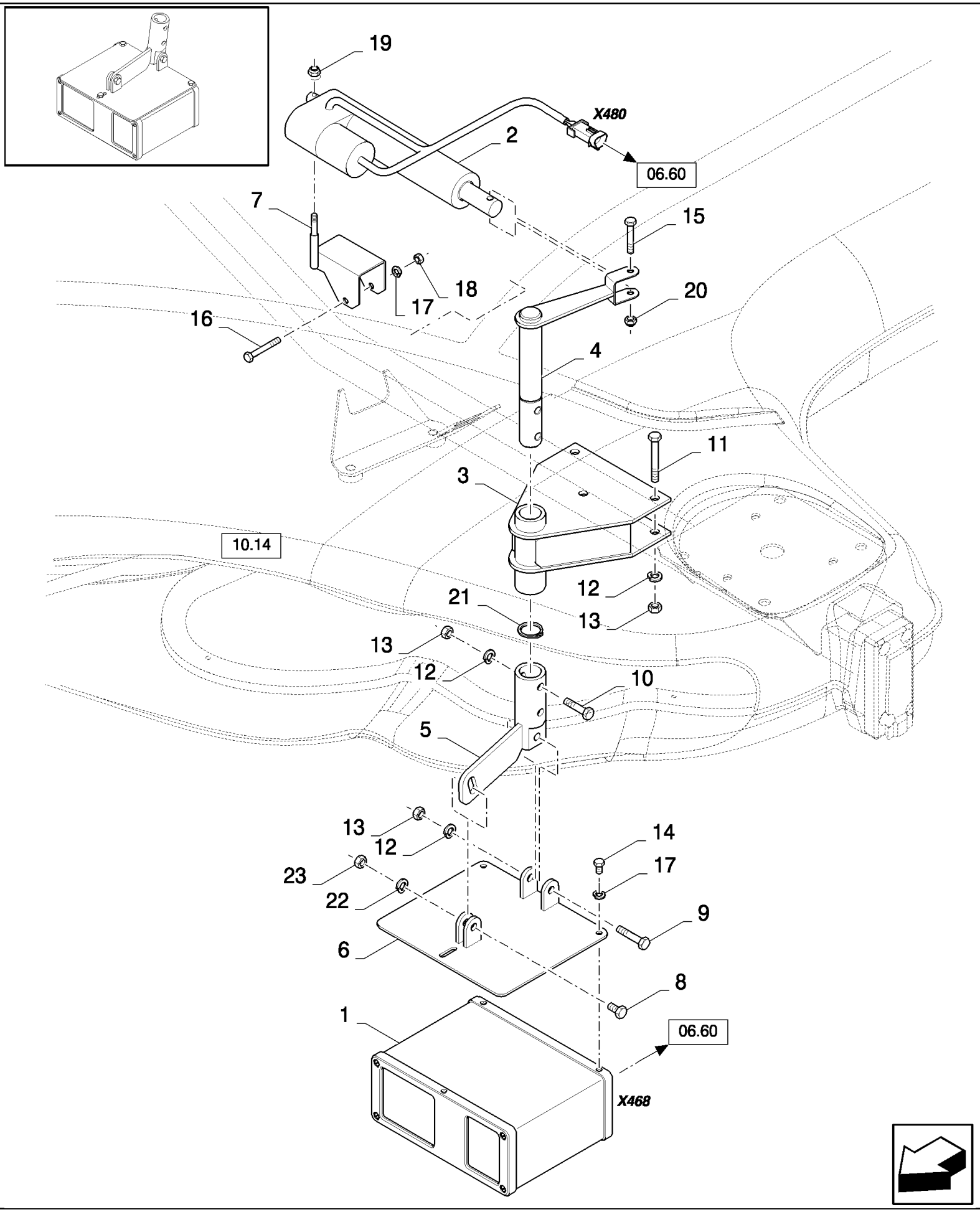

CX880 COMBINE - BASE UNIT (2/01-)

06.58(01) SMART STEER AUTO-GUIDANCE KIT - EDGE DETECTION SENSOR

ссылка	Номер детали	Кол-во	Описание
1	84452151	1	MODULE,
2	84053684	1	ACTUATOR, , FOR FIELD INSTALLED ONLY
2	87347281	1	ACTUATOR, , FOR FACTORY FITTED ONLY
3	84455077	1	SUPPORT, , FOR FIELD INSTALLED ONLY
3	87378786	1	BRACKET, , FOR FACTORY FITTED ONLY
4	84455075	1	SHAFT, , FOR FIELD INSTALLED ONLY
4	87378799	1	PIVOT ASSY., , FOR FACTORY FITTED ONLY
5	84455082	1	SUPPORT, , FOR FIELD INSTALLED ONLY
5	87378788	1	BRACKET, , FOR FACTORY FITTED ONLY
6	84455269	1	SUPPORT, , FOR FIELD INSTALLED ONLY
6	87378791	1	BRACKET, , FOR FACTORY FITTED ONLY
7	84455084	1	SUPPORT, , FOR FIELD INSTALLED ONLY
7	87378797	1	BRACKET, , FOR FACTORY FITTED ONLY
8	43127	1	BOLT, Hex, M8 x 25, 8.8,
9	43129	1	BOLT, Hex, M8 x 40, 8.8,
10	300381	2	BOLT, Hex, M8 x 35, 8.8, M8x35
11	120061	3	BOLT, Hex, M8 x 60, 8.8,
12	322358	7	WASHER, SPRING, Belleville, M8,
13	89706690	7	NUT, M8, Cl 8,
14	86977726	3	BOLT, Hex, M6 x 12, 8.8,
15	87716	1	BOLT, Hex, 1/4"-20 x 1 1/4", G5,
16	120056	1	SCREW, Hex, M6 x 50, 8.8,
17	322357	4	WASHER, SPRING, Belleville, M6,
18	15896221	1	NUT, M6, Cl 10,
19	353308	1	NUT, M6 x 1, Cl 8,
20	280129	1	NUT, LOCK, 1/4"-20, GC,
21	370002	1	RING, SNAP, M25, Ext,

06.59(01) SMART STEER AUTO-GUIDANCE KIT - ELECTRICAL WIRING LOOM

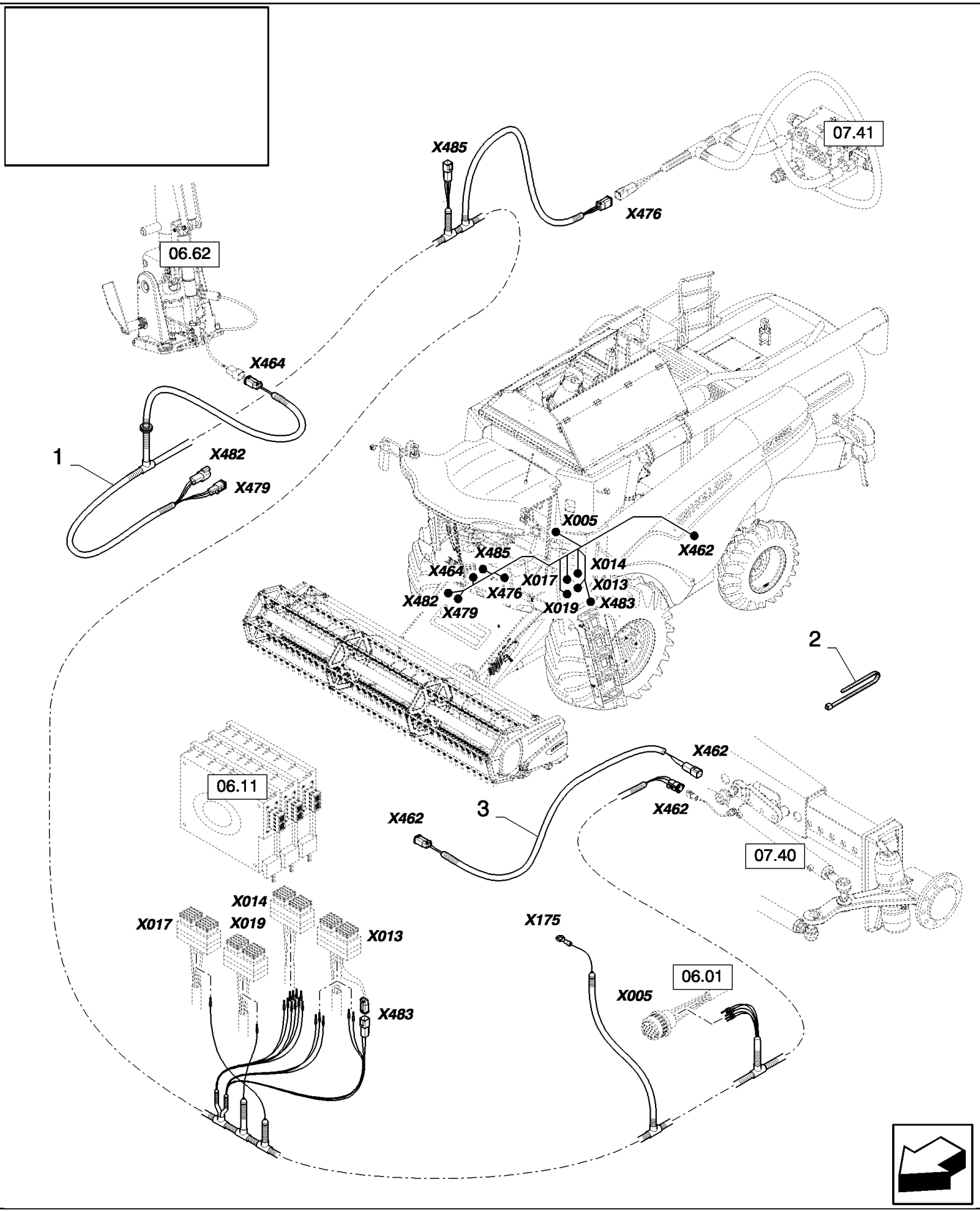

CX880 COMBINE - BASE UNIT (2/01-)

06.59(01) SMART STEER AUTO-GUIDANCE KIT - ELECTRICAL WIRING LOOM

ссылка	Номер детали	Кол-во	Описание
1	84454986	1	HARNESS, WIRE,
2	89993154	AR	CLAMP,
3	87371032	1	HARNESS, WIRE,

06.60(01) SMART STEER AUTO-GUIDANCE KIT - ELECTRICAL WIRING LOOM

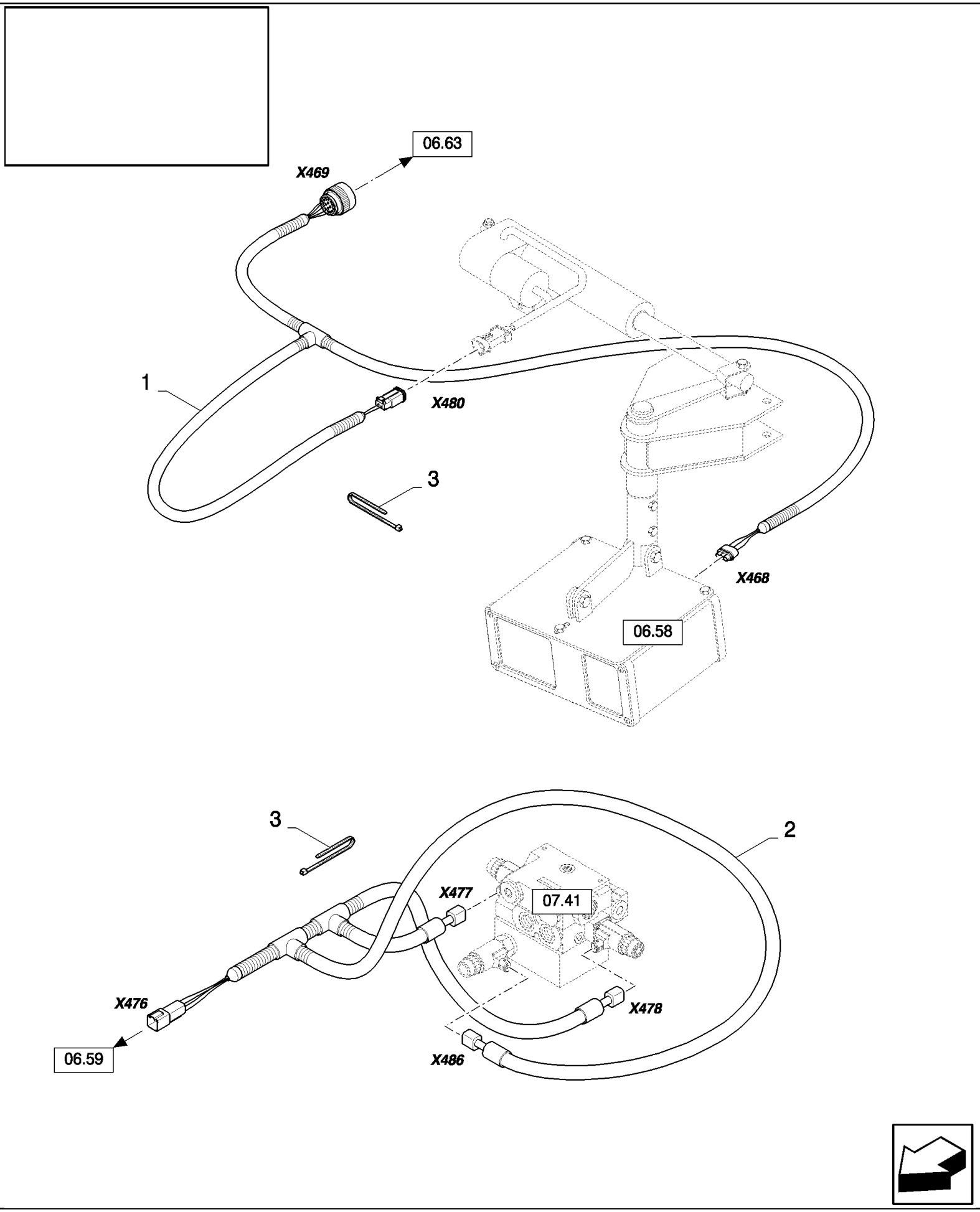

CX880 COMBINE - BASE UNIT (2/01-)

06.60(01) SMART STEER AUTO-GUIDANCE KIT - ELECTRICAL WIRING LOOM

ссылка	Номер детали	Кол-во	Описание
1	84454985	1	HARNESS, WIRE,
2	84455109	1	HARNESS, WIRE,
3	89993154	AR	CLAMP,

06.61(01) SMART STEER AUTO-GUIDANCE KIT - ELECTRICAL WIRING LOOM

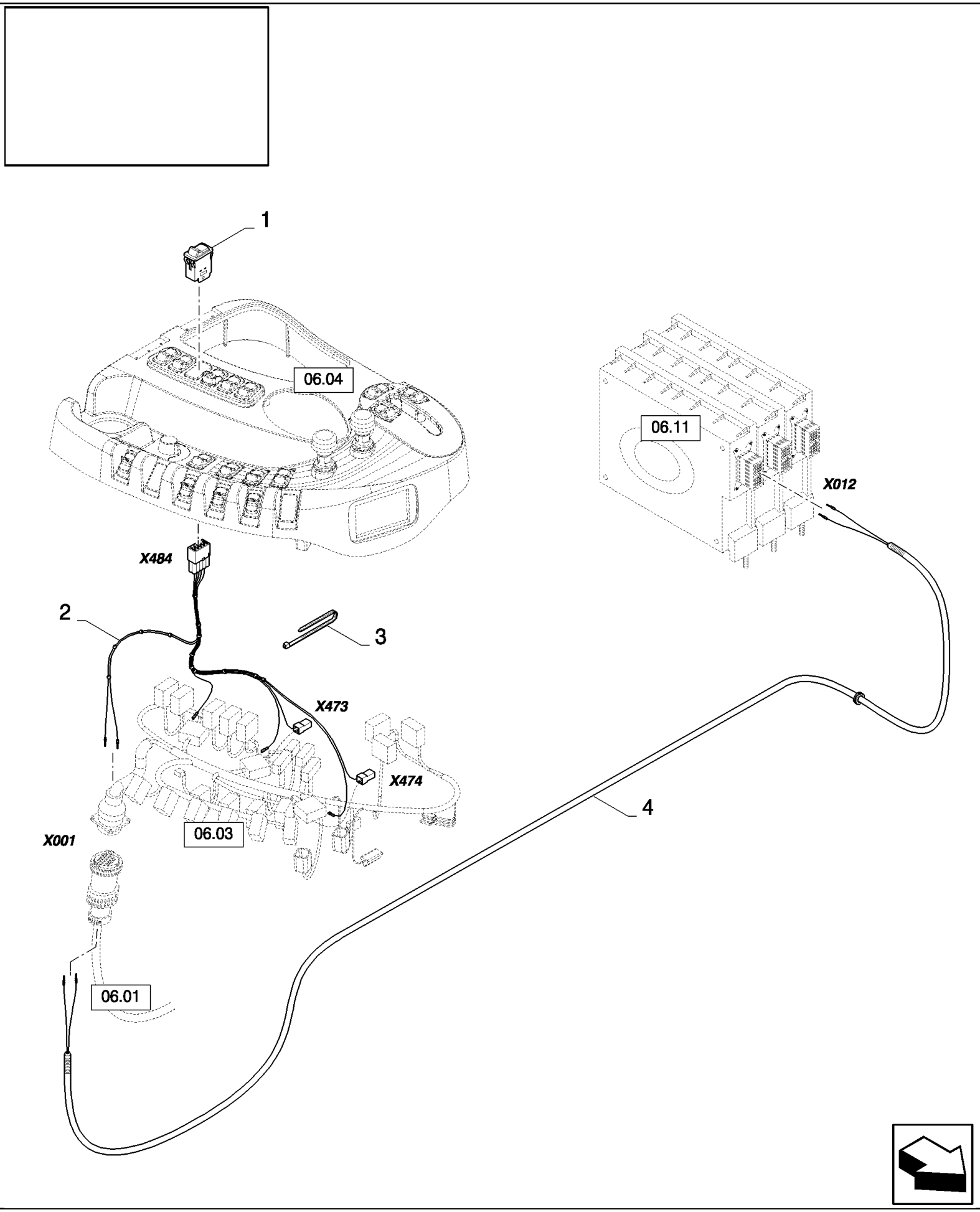

CX880 COMBINE - BASE UNIT (2/01-)

06.61(01) SMART STEER AUTO-GUIDANCE KIT - ELECTRICAL WIRING LOOM

ссылка	Номер детали	Кол-во	Описание
1	84454794	1	SWITCH,
2	84454885	1	HARNESS, WIRE,
3	89993154	AR	CLAMP,
4	84454927	1	HARNESS, WIRE,

06.62(01) SMART STEER AUTO-GUIDANCE KIT - STEERING WHEEL, SENSOR

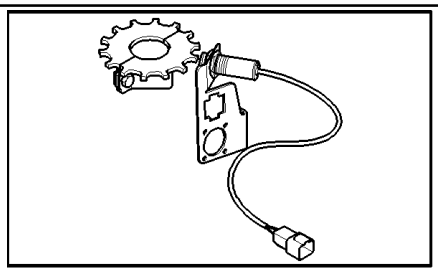

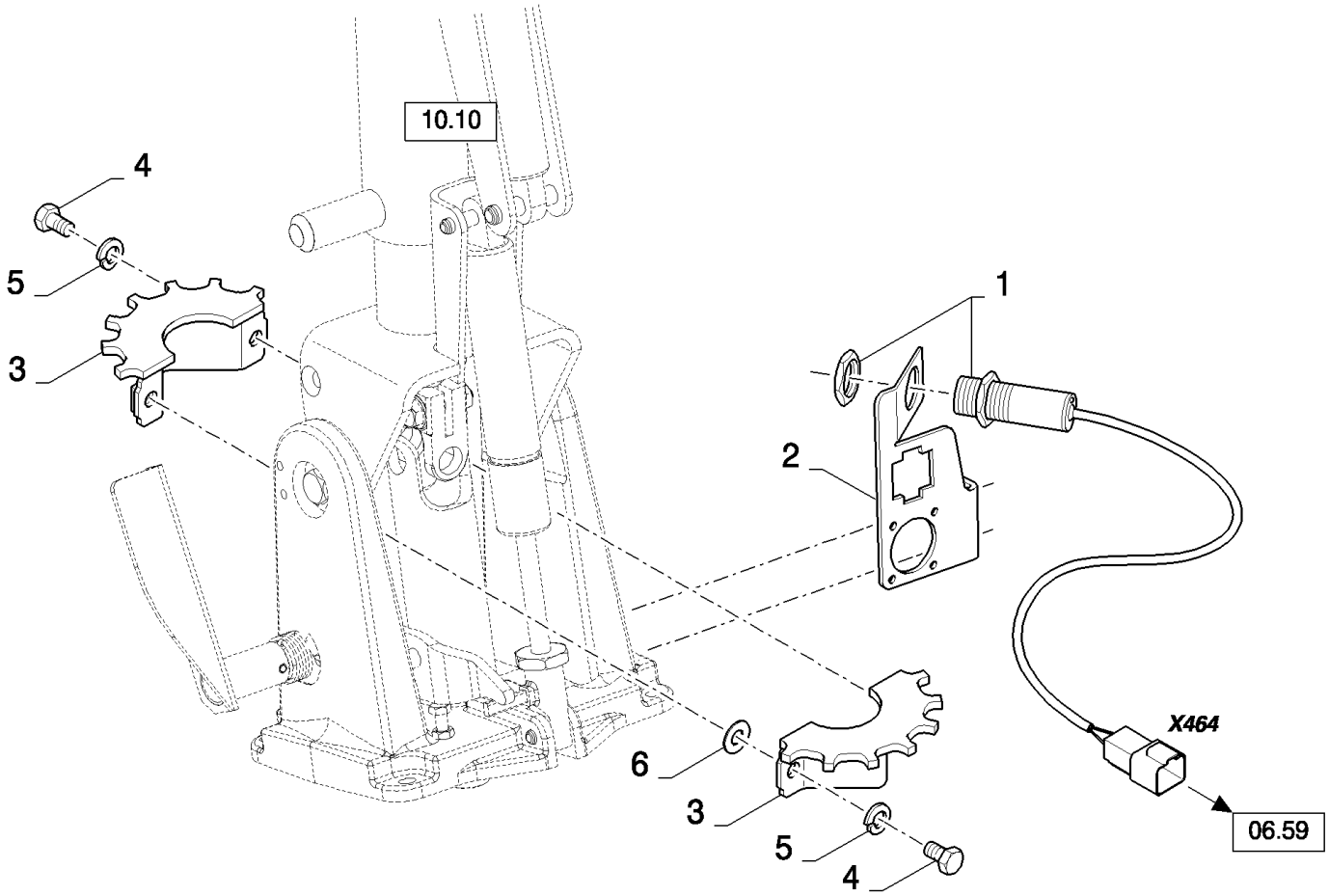

CX880 COMBINE - BASE UNIT (2/01-)

06.62(01) SMART STEER AUTO-GUIDANCE KIT - STEERING WHEEL, SENSOR

ссылка	Номер детали	Кол-во	Описание
1	84058862	1	SENSOR,
2	84455232	1	SUPPORT,
3	84452411	2	RING, SPLINED,
4	86508568	2	SCREW, Hex, M6 x 16, 8.8,
5	322357	2	WASHER, SPRING, Belleville, M6,
6	399544	1	WASHER, 6MM

06.63(01) SMART STEER AUTO-GUIDANCE KIT - ELECTRICAL WIRING LOOM

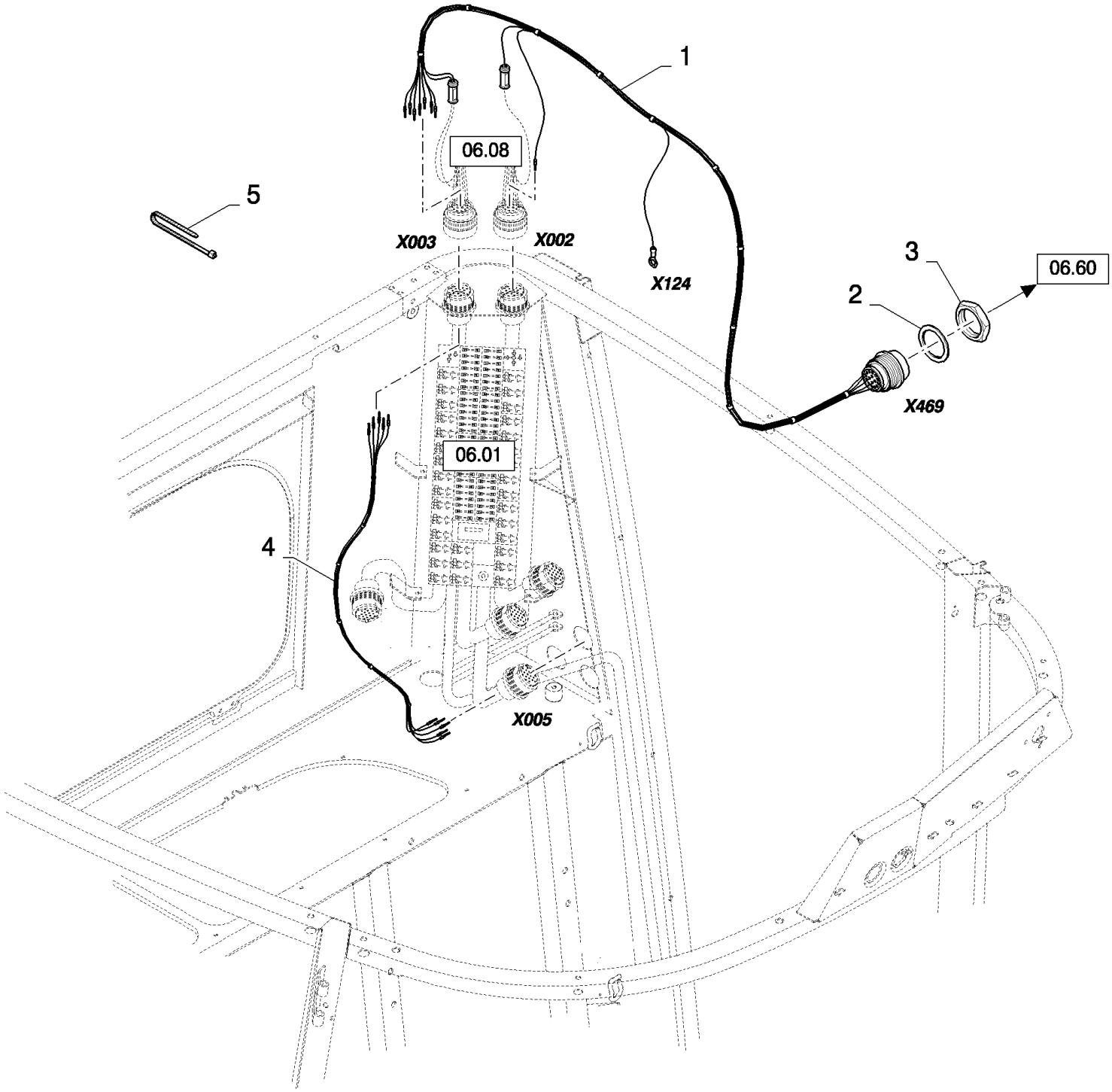

CX880 COMBINE - BASE UNIT (2/01-)

06.63(01) SMART STEER AUTO-GUIDANCE KIT - ELECTRICAL WIRING LOOM

ссылка	Номер детали	Кол-во	Описание
1	84454966	1	HARNESS, WIRE,
2	636665	1	WASHER, LOCK,
3	636666	1	NUT,
4	84454929	1	HARNESS, WIRE,
5	89993154	AR	CLAMP,

06.64(01) VERTICAL KNIFE

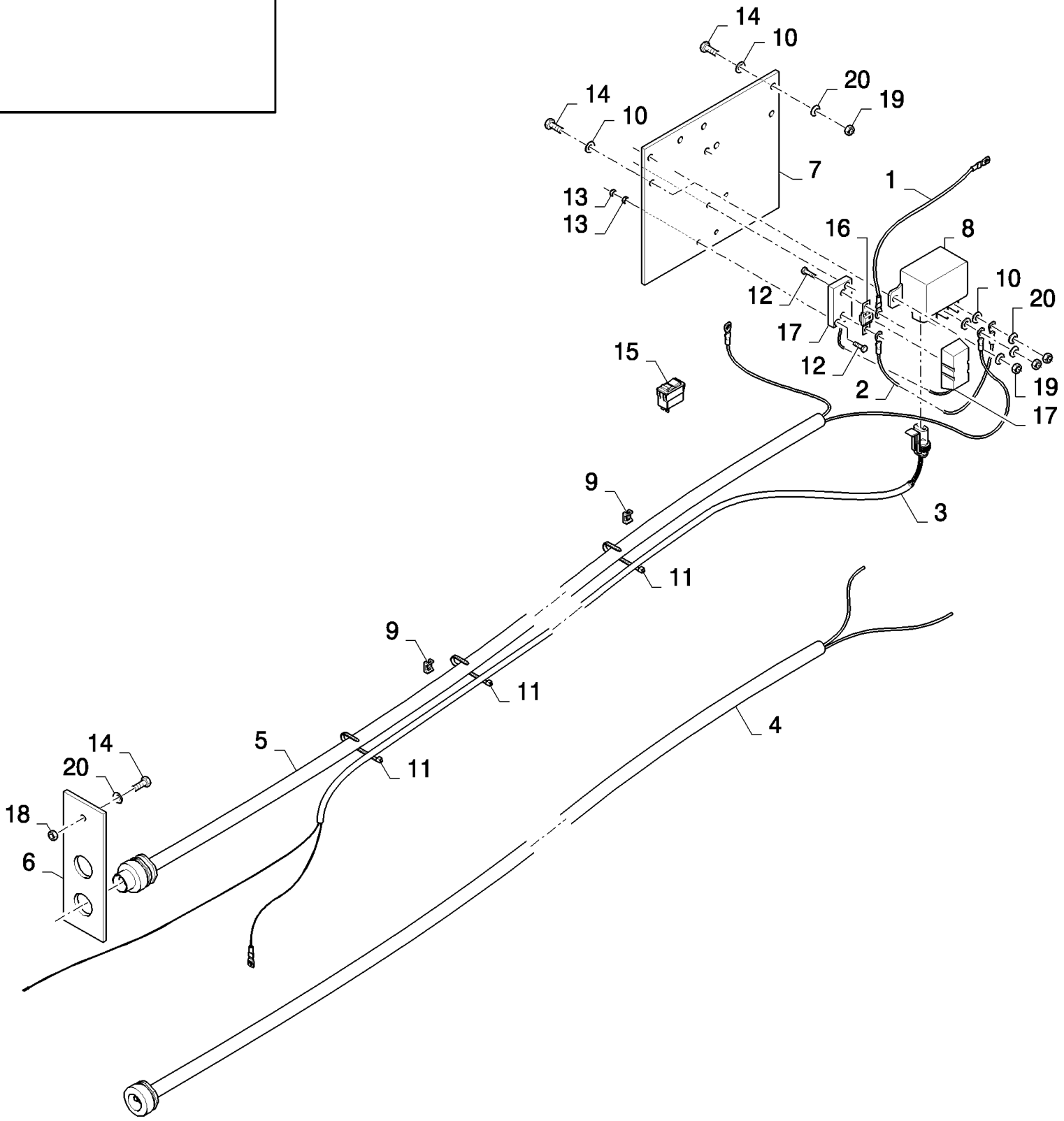

CX880 COMBINE - BASE UNIT (2/01-)

06.64(01) VERTICAL KNIFE

ссылка	Номер детали	Кол-во	Описание
1	86979559	1	HARNESS, WIRE,
2	86979558	1	HARNESS, WIRE,
3	86979557	1	HARNESS, WIRE,
4	86979556	1	HARNESS, WIRE,
5	86979555	1	HARNESS, WIRE,
6	86979554	1	CLAMP,
7	86979552	1	BRACKET,
8	86619908	1	RELAY,
9	86590413	5	CLAMP,
10	86588450	7	WASHER, M6,
11	86566989	15	STRAP, CABLE,
12	86511816	2	SCREW, Cross Pan Hd, M3 x 16,
13	86508812	2	NUT, M3, Cl 8,
14	86508568	7	SCREW, Hex, M6 x 16, 8.8,
15	84320251	1	SWITCH,
16	84320118	1	FUSE, 40A
17	84078784	1	FUSE HOLDER,
18	89706755	7	NUT, M6
19	80353308	2	NUT, M6
20	80322357	7	WASHER, SPRING, Belleville, M6, 6MM

CX880 COMBINE - BASE UNIT (2/01-)

06.801(01) CONNECTORS - FROM 80334588 TO 80445521

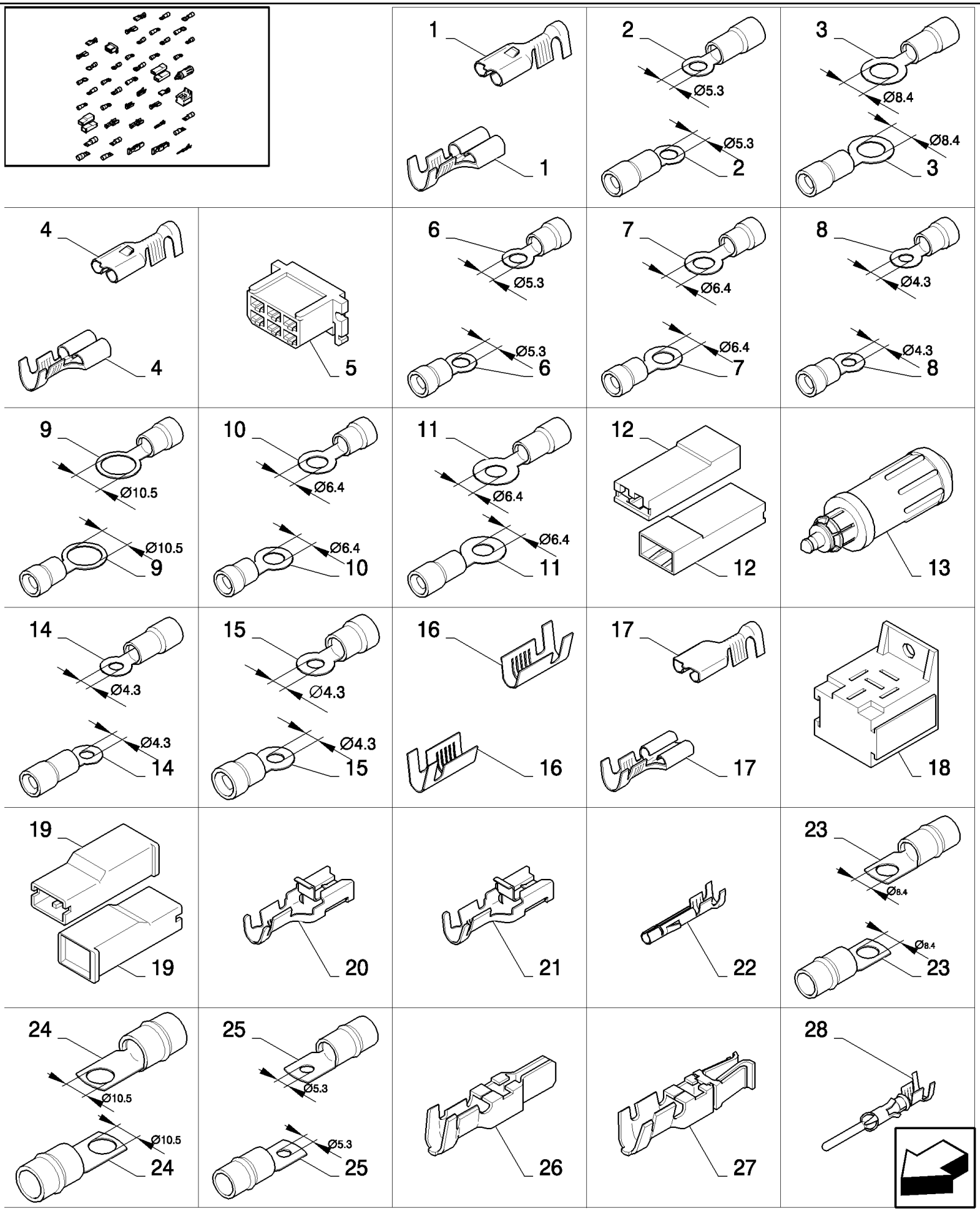

CX880 COMBINE - BASE UNIT (2/01-)

06.801(01) CONNECTORS - FROM 80334588 TO 80445521

ссылка	Номер детали	Кол-во	Описание
1	334588	AR	TERMINAL, 1-2.5MMI
2	80334591	AR	TERMINAL, 4-6MMI
3	80334592	AR	TERMINAL CONNECTOR, 4-6MMI
4	334594	AR	TERMINAL, 4-6MMI
5	334595	AR	TERMINAL,
6	334787	AR	CABLE TERMINAL, 1.5-2.5MMI
7	335316	AR	TERMINAL, 0.3-1.3MMI
8	80335480	AR	TERMINAL, 1.5-2.5MMI
9	335481	AR	TERMINAL, 1.5-2.5MMI
10	335482	AR	TERMINAL, 1.5-2.5MMI
11	335483	AR	TERMINAL, 4-6MMI
12	350674	AR	CONNECTOR, WIRE,
13	353969	AR	CONNECTOR, ELEC,
14	80354118	AR	TERMINAL, 4-6MMI
15	80357472	AR	TERMINAL, 0.3-1.3MMI
16	426199	AR	TERMINAL, 1.5-2.5MMI
17	430026	AR	TERMINAL, 1.5-2.5MMI
18	439588	AR	SUPPORT,
19	441159	AR	CONNECTOR, WIRE,
20	441166	AR	TERMINAL, 0.7-2MMI
21	441167	AR	TERMINAL, 2.5-4MMI
22	442243	AR	CONNECTOR, ELEC, 0.5-2.1MMI
23	80444851	AR	TERMINAL, 16-20MMI
24	80444852	AR	TERMINAL, 16-20MMI
25	80444853	AR	CABLE TERMINAL, 16-20MMI
26	445517	AR	TERMINAL, 1.5-4MMI
27	445518	AR	TERMINAL, 5-8MMI
28	445521	AR	TERMINAL, 1-2.5MMI

06.801(02) CONNECTORS - FROM 80445522 TO 84058194

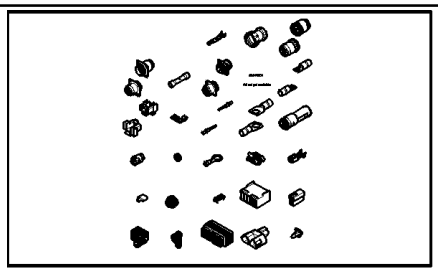

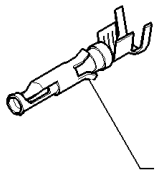

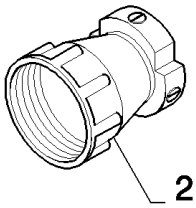

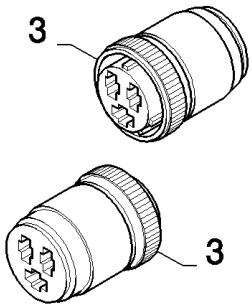

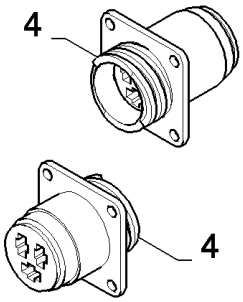

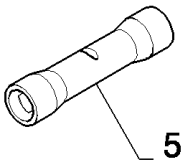

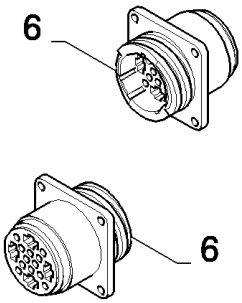

80447904
Art not yet available

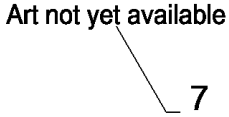

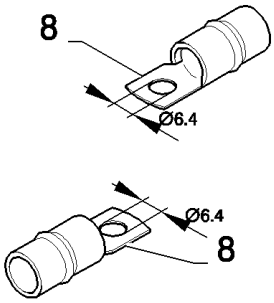

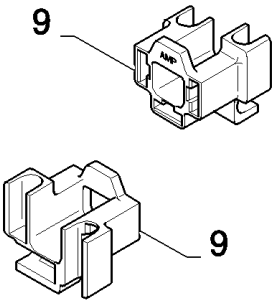

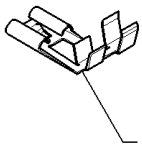

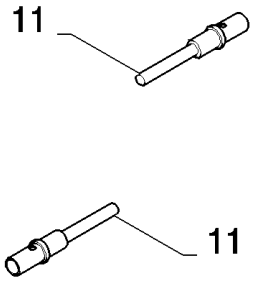

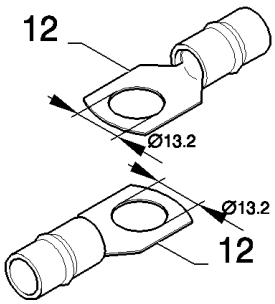

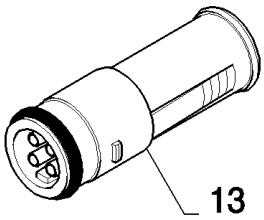

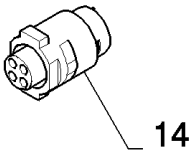

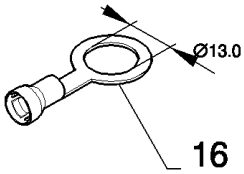

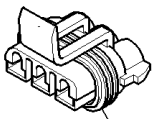

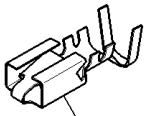

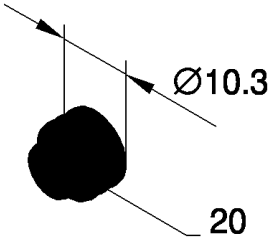

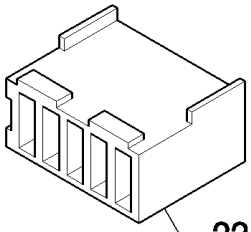

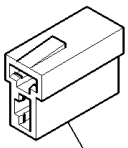

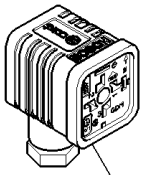

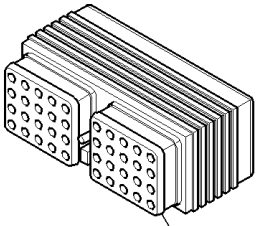

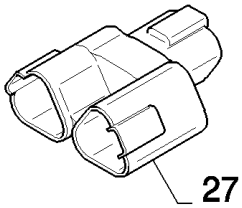

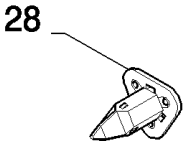

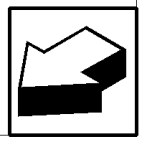

CX880 COMBINE - BASE UNIT (2/01-)

06.801(02) CONNECTORS - FROM 80445522 TO 84058194

ссылка	Номер детали	Кол-во	Описание
1	445522	AR	TERMINAL, 1-2.5MMI
2	80445526	AR	COLLAR,
3	80445745	AR	CONNECTOR, WIRE,
4	445746	AR	CONNECTOR, WIRE,
5	80446236	AR	CABLE TERMINAL, 0.5-1.5MMI
6	447569	AR	CONNECTOR, WIRE,
7	80447904	AR	CONNECTOR, WIRE,
8	455780	AR	TERMINAL, 16-20MMI
9	751307	AR	TERMINAL,
10	751308	AR	TERMINAL,
11	900363	AR	TERMINAL, 0.8-1MMI
12	80916171	AR	CABLE TERMINAL, 16-20MMI
13	916790	AR	CONNECTOR, WIRE, 4P-M
14	916791	AR	CONNECTOR, WIRE, 4P-V
15	916797	AR	GASKET,
16	80919749	AR	CABLE TERMINAL, 2.5-6MMI
17	84000181	AR	TERMINAL,
18	84000182	AR	TERMINAL, 1-2MMI
19	84004134	AR	TERMINAL,
20	84004255	AR	SEAL, 2.81-3.75MMI
21	84004256	AR	CLAMP,
22	84007631	AR	TERMINAL,
23	84015523	AR	CONNECTOR, ELEC,
24	84019407	AR	CONNECTOR, HYD.,
25	84038072	AR	CABLE,
26	84058011	AR	CONNECTOR, WIRE,
27	84058188	AR	CONNECTOR, WIRE,
28	84058194	AR	PLUG,

06.801(03) CONNECTORS - FROM 84068583 TO 84400774

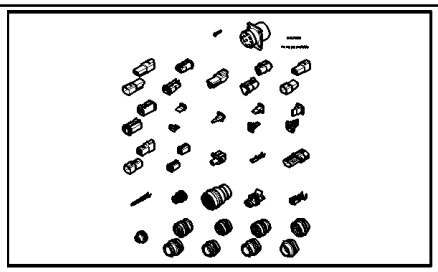

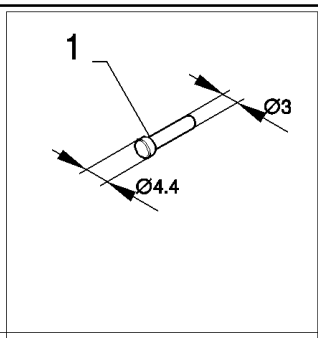

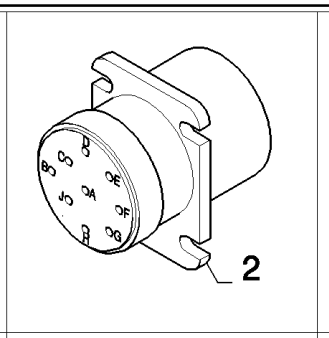

84074628
Art not yet available
3

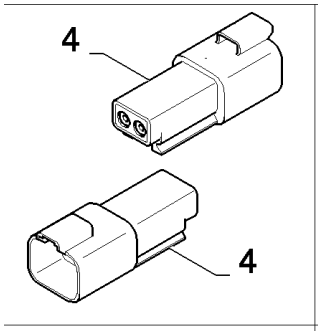

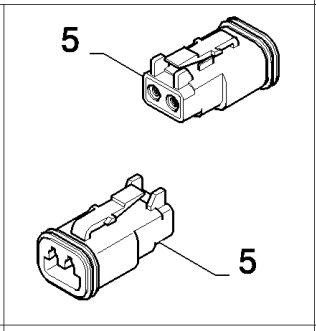

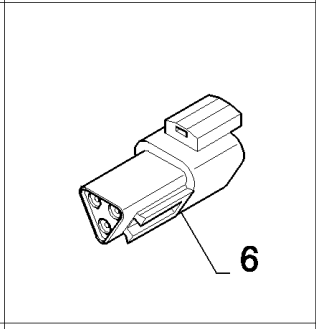

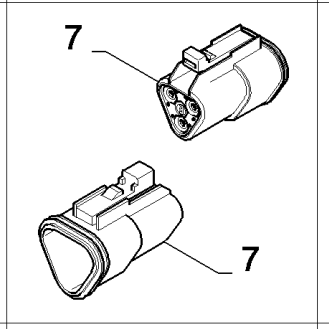

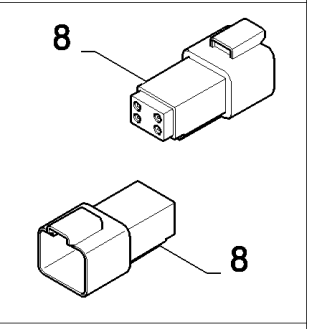

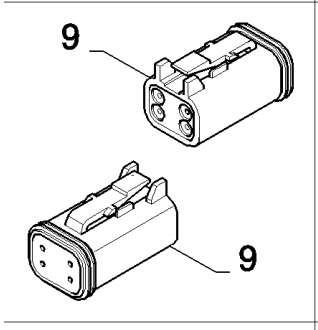

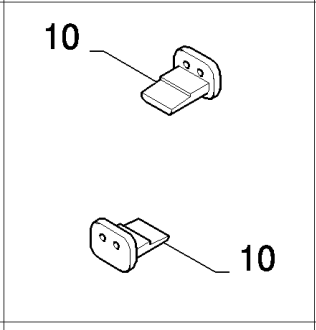

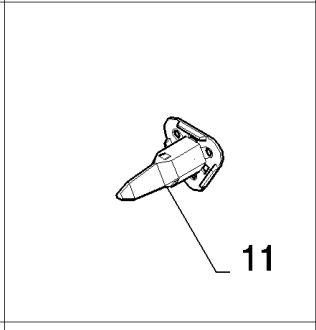

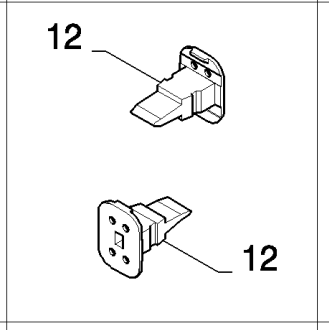

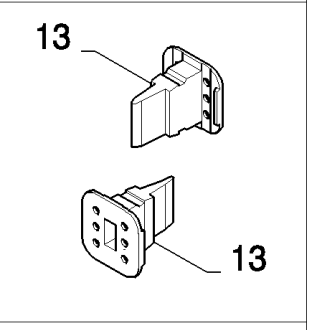

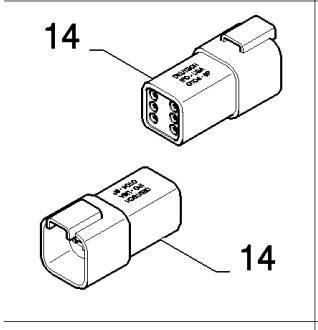

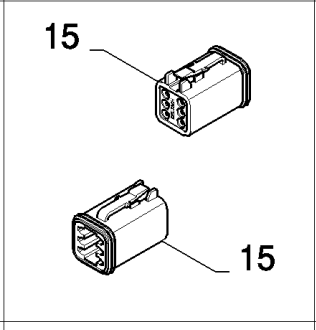

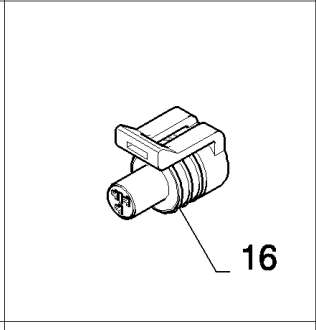

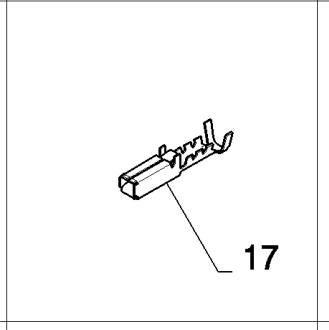

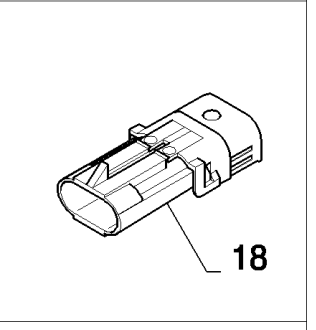

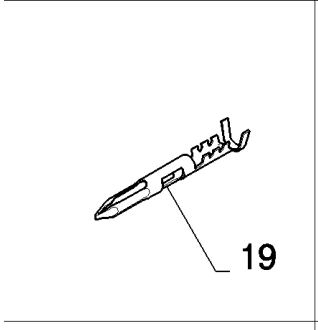

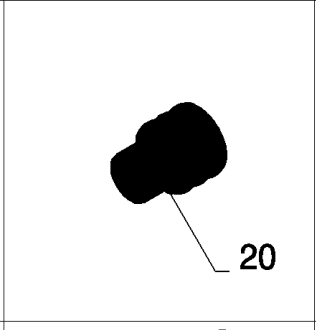

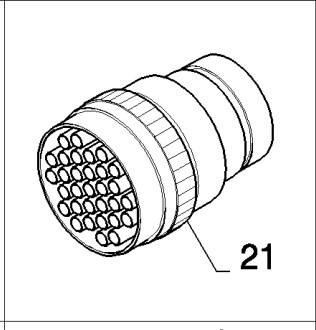

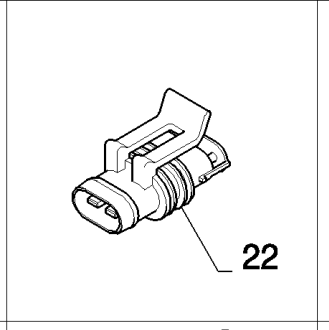

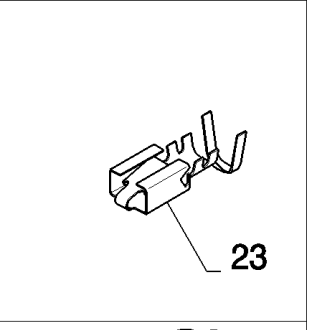

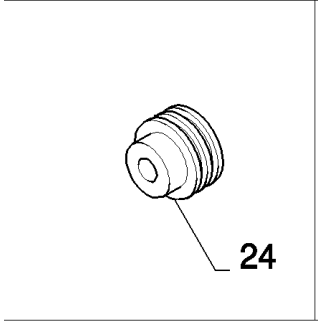

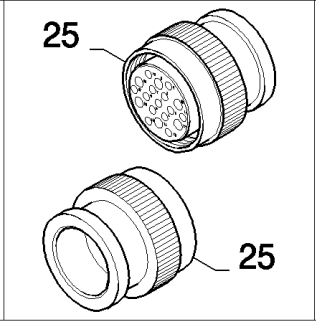

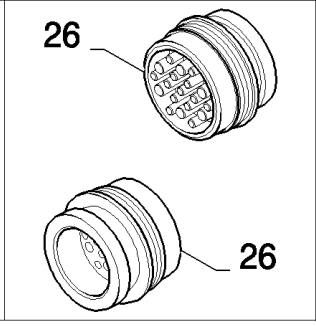

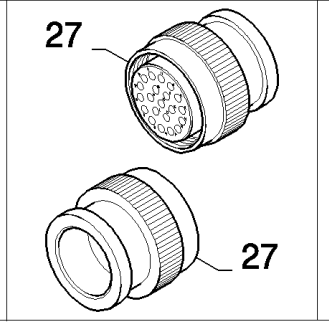

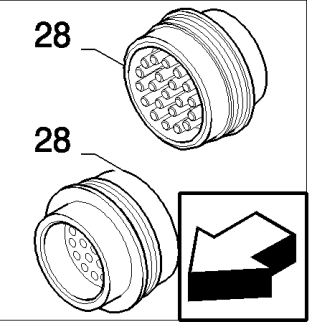

CX880 COMBINE - BASE UNIT (2/01-)

06.801(03) CONNECTORS - FROM 84068583 TO 84400774

ссылка	Номер детали	Кол-во	Описание
1	84068583	AR	PLUG,
2	84074254	AR	CONNECTOR, WIRE,
3	84074628	AR	CABLE TERMINAL,
4	84074630	AR	CONNECTOR, WIRE, 0.82-1.31MMI
5	84074631	AR	CONNECTOR, WIRE,
6	84074632	AR	CONNECTOR, WIRE,
7	84074635	AR	CONNECTOR, WIRE,
8	84074636	AR	CONNECTOR, WIRE,
9	84074637	AR	CONNECTOR, WIRE,
10	84074638	AR	PLUG,
11	84074639	AR	CONNECTOR, WIRE,
12	84074640	AR	PLUG,
13	84074641	AR	PLUG,
14	84074642	AR	CONNECTOR, WIRE,
15	84074643	AR	CONNECTOR, WIRE,
16	84078681	AR	CONNECTOR, WIRE, 2.03-2.4MMI
17	84078682	AR	TERMINAL, 0.8-1MMI
18	84100536	AR	CONNECTOR, WIRE,
19	84100537	AR	TERMINAL, 1-2MMI
20	84100538	AR	CONNECTOR, WIRE, 3.49-2.81MMI
21	84320884	AR	CONNECTOR, ELEC,
22	84400439	AR	CONNECTOR, WIRE,
23	84400440	AR	CONNECTOR, WIRE,
24	84400441	AR	PLUG,
25	84400771	AR	CONNECTOR, WIRE,
26	84400772	AR	CONNECTOR, WIRE,
27	84400773	AR	CONNECTOR, WIRE,
28	84400774	AR	CONNECTOR, WIRE,

06.801(04) CONNECTORS - FROM 84400775 TO 84806918

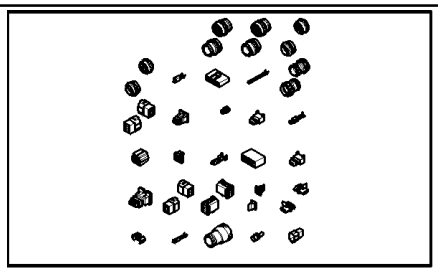

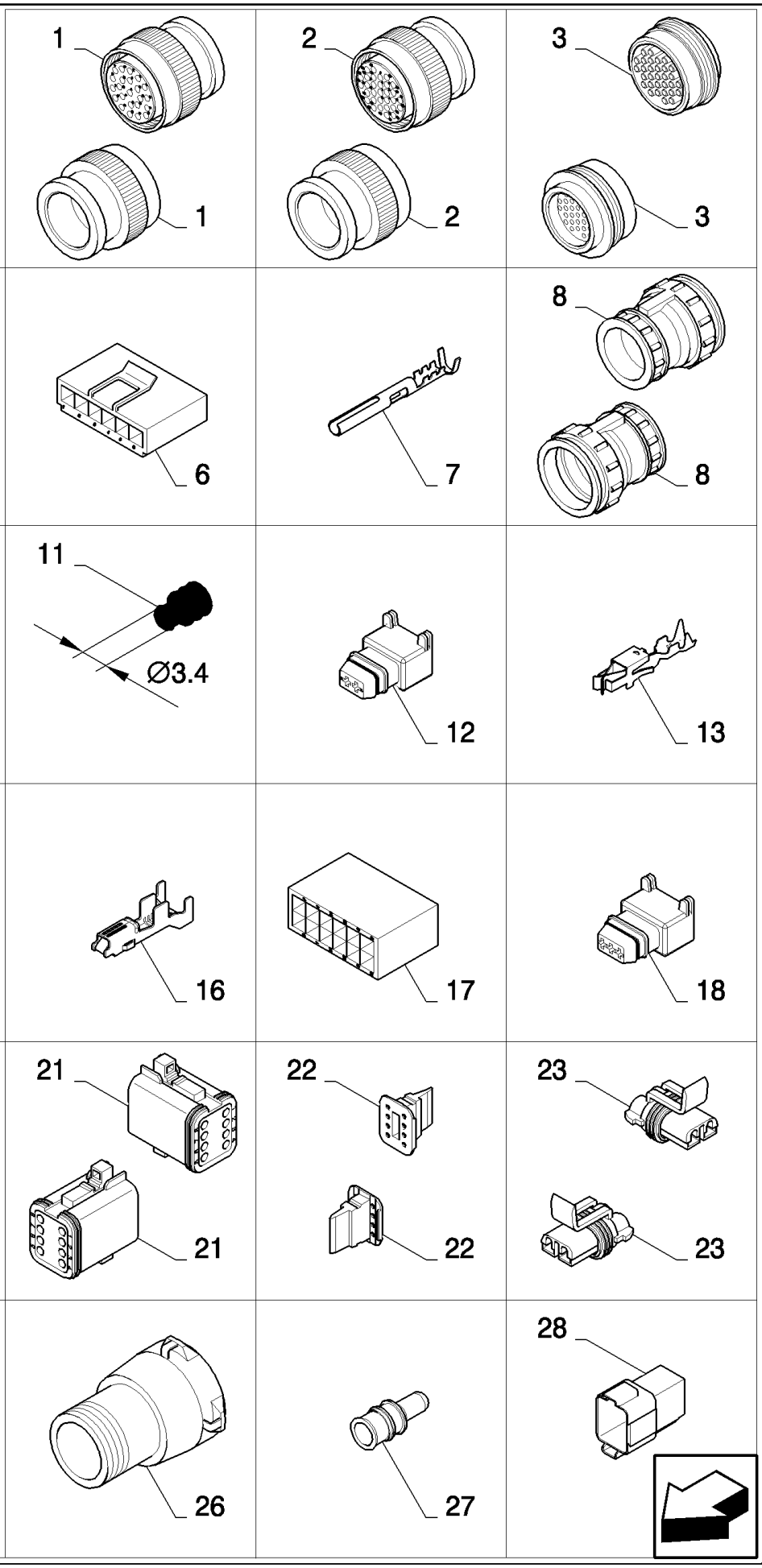

CX880 COMBINE - BASE UNIT (2/01-)

06.801(04) CONNECTORS - FROM 84400775 TO 84806918

ссылка	Номер детали	Кол-во	Описание
1	84400775	AR	CONNECTOR, WIRE,
2	84400776	AR	CONNECTOR, WIRE,
3	84400777	AR	TAB, LOCKING,
4	84400780	AR	CONNECTOR, WIRE,
5	84439475	AR	CONNECTOR, WIRE,
6	84439476	AR	CONNECTOR, WIRE,
7	84441696	AR	CONNECTOR, WIRE, 1-2MMI
8	84441874	AR	CONNECTOR, WIRE,
9	84449647	AR	CONNECTOR, WIRE,
10	84607213	AR	CONNECTOR, WIRE,
11	84607242	AR	SEAL,
12	84607243	AR	CONNECTOR, WIRE,
13	84607244	AR	TERMINAL,
14	84607372	AR	CONNECTOR, WIRE,
15	84607373	AR	STOP DEVICE,
16	84607374	AR	CONNECTOR, WIRE,
17	84607379	AR	CONNECTOR, WIRE,
18	84806090	AR	CONNECTOR, WIRE,
19	84806091	AR	CONNECTOR, WIRE,
20	84806208	AR	CONNECTOR, WIRE,
21	84806311	AR	CONNECTOR, WIRE,
22	84806312	AR	CONNECTOR, WIRE,
23	84806457	AR	CONNECTOR, WIRE,
24	84806458	AR	CONNECTOR, WIRE,
25	84806460	AR	CABLE TERMINAL, 2-3MMI
26	84806654	AR	CONNECTOR, WIRE,
27	84806656	AR	CABLE TERMINAL,
28	84806918	AR	CONNECTOR, WIRE,

06.801(05) CONNECTORS - FROM 84806919 TO 84814865

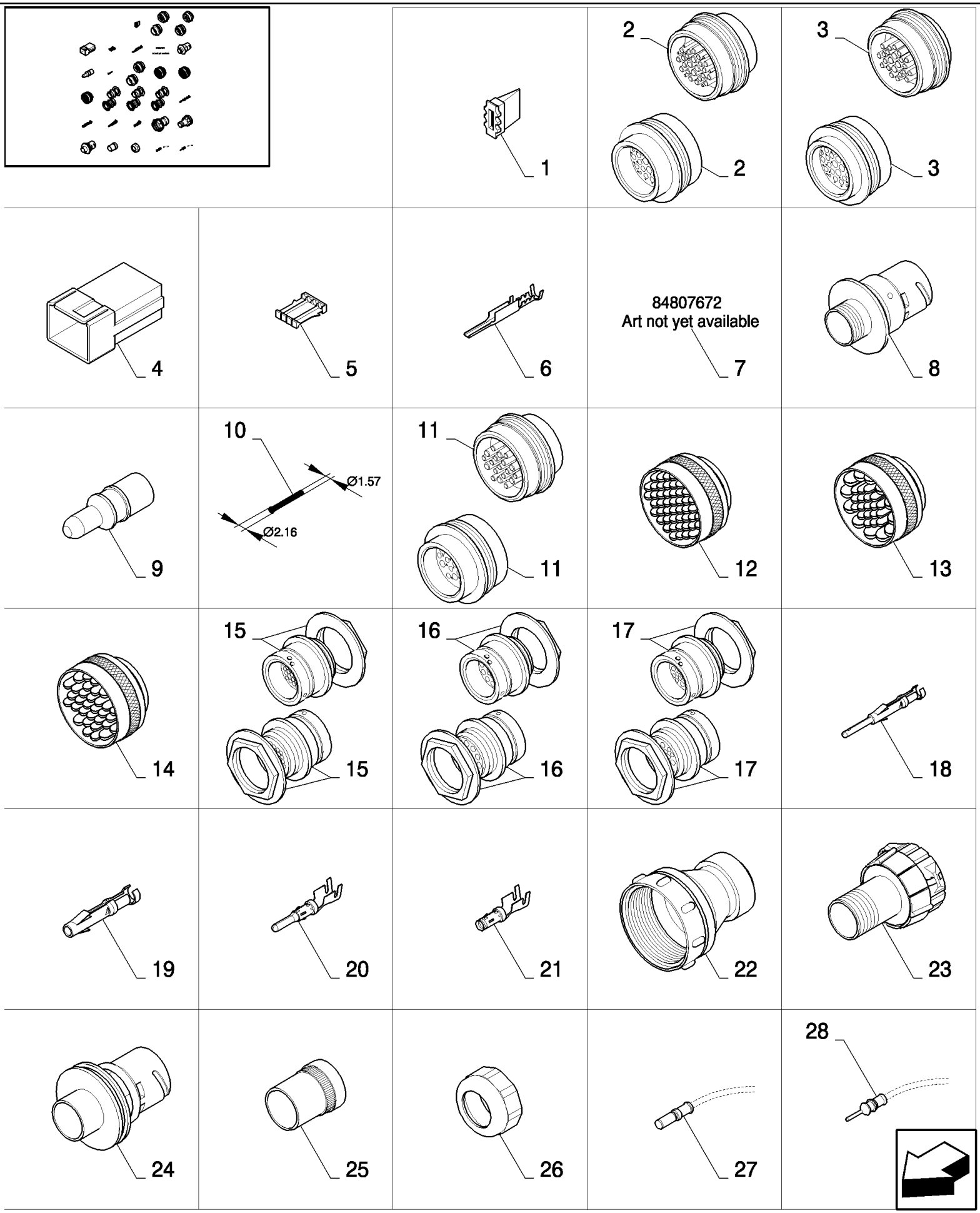

CX880 COMBINE - BASE UNIT (2/01-)

06.801(05) CONNECTORS - FROM 84806919 TO 84814865

ссылка	Номер детали	Кол-во	Описание
1	84806919	AR	PLUG,
2	84807216	AR	CONNECTOR, WIRE,
3	84807217	AR	CONNECTOR, WIRE,
4	84807268	AR	CONNECTOR, WIRE,
5	84807269	AR	CONNECTOR, WIRE,
6	84807270	AR	CABLE TERMINAL, 0.8-1MMI
7	84807672	AR	CABLE TERMINAL,
8	84807676	AR	CONNECTOR, WIRE,
9	84807678	AR	CABLE TERMINAL,
10	84807680	AR	TAB, LOCKING,
11	84814753	AR	CONNECTOR, WIRE,
12	84814754	AR	CONNECTOR, WIRE,
13	84814755	AR	CONNECTOR, WIRE,
14	84814756	AR	CONNECTOR, WIRE,
15	84814757	AR	CONNECTOR, WIRE,
16	84814758	AR	CONNECTOR, WIRE,
17	84814759	AR	CONNECTOR, WIRE,
18	84814761	AR	CABLE TERMINAL,
19	84814762	AR	CABLE TERMINAL,
20	84814763	AR	CABLE TERMINAL, 1.5-2.5MMI
21	84814764	AR	CABLE TERMINAL,
22	84814765	AR	ADAPTER,
23	84814773	AR	CONNECTOR, WIRE,
24	84814774	AR	CONNECTOR, WIRE,
25	84814862	AR	CONNECTOR, WIRE,
26	84814863	AR	CONNECTOR, WIRE,
27	84814864	AR	CABLE TERMINAL,
28	84814865	AR	CABLE TERMINAL,

06.801(06) CONNECTORS - FROM 84814866 TO 89818033

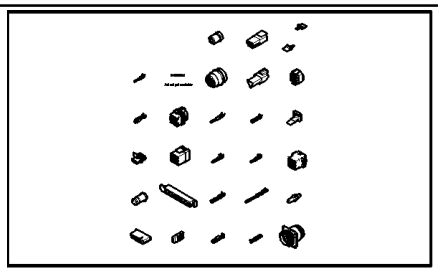

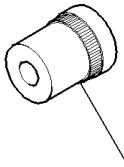

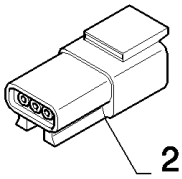

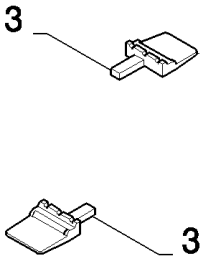

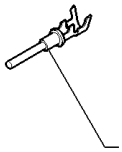

84818184
Art not yet available

5

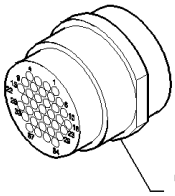

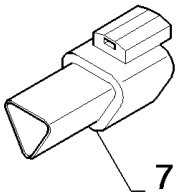

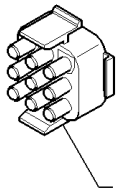

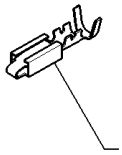

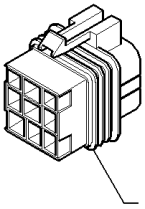

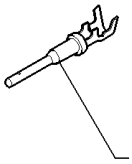

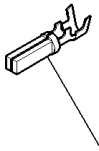

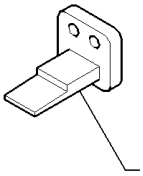

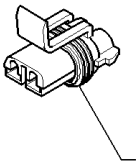

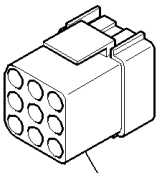

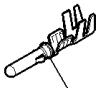

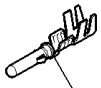

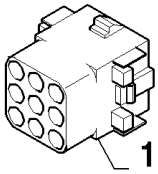

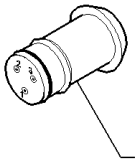

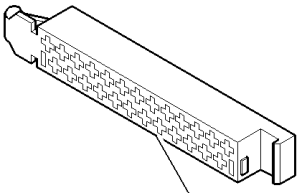

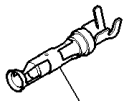

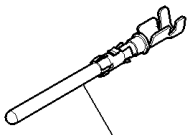

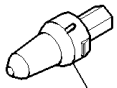

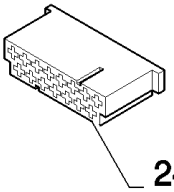

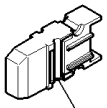

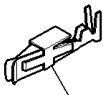

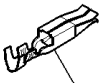

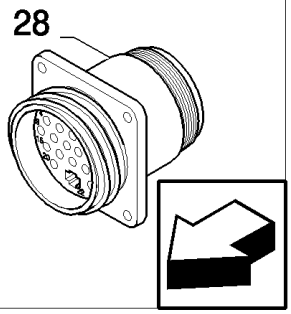

CX880 COMBINE - BASE UNIT (2/01-)

06.801(06) CONNECTORS - FROM 84814866 TO 89818033

ссылка	Номер детали	Кол-во	Описание
1	84814866	AR	CONNECTOR, WIRE,
2	84817101	AR	CONNECTOR, WIRE,
3	84817102	AR	TAB, LOCKING,
4	84817103	AR	CABLE TERMINAL, 0.8-1MMI
5	84818184	AR	CABLE TERMINAL,
6	84818192	AR	CONNECTOR, ELEC,
7	84818205	AR	CONNECTOR, WIRE,
8	84818419	AR	CONNECTOR, WIRE,
9	84819793	AR	CABLE TERMINAL, 1-2MMI
10	84819794	AR	CONNECTOR, WIRE,
11	86500035	AR	TERMINAL, 0.82-1.31MMI
12	86500036	AR	PIN, ELECT TERMINAL, 0.8-1MMI
13	86500166	AR	PLUG,
14	86611284	AR	CONNECTOR, WIRE,
15	89505300	AR	CONNECTOR, ELEC,
16	89506052	AR	CABLE, 0.5-2MMI
17	89506053	AR	TERMINAL, 2.1-4MMI
18	9509740	AR	CONNECTOR, ELEC,
19	9510662	AR	CONNECTOR, WIRE, 2.3-3MMI
20	9510666	AR	CONNECTOR, WIRE,
21	9513123	AR	TERMINAL, 0.5-1.5MMI
22	9516242	AR	TERMINAL, 0.5-1.5MMI
23	9611173	AR	PLUG,
24	9811261	AR	CONNECTOR, ELEC,
25	9811772	AR	FUSE HOLDER,
26	9813989	AR	TERMINAL, 1-2.5MMI
27	9815256	AR	CONNECTOR, ELEC, 0.5-1.5MMI
28	9818033	AR	CONNECTOR, WIRE,

06.801(07) CONNECTORS - FROM 89818548 TO 89861378

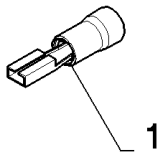

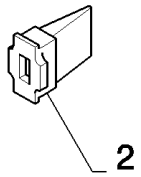

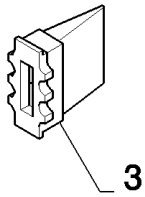

CX880 COMBINE - BASE UNIT (2/01-)

06.801(07) CONNECTORS - FROM 89818548 TO 89861378

ссылка	Номер детали	Кол-во	Описание
1	9818548	AR	TERMINAL, 0.3-1.5MMI
2	9861376	AR	CONNECTOR, WIRE,
3	89861378	AR	PLUG,

HYDRAULIC SYSTEMS | **INSTALLATION HYDRAULIQUE** | **INSTALACIÓN HIDRÁULICA** | **HYDRAULIKANLÆG**

IMPIANTO IDRAULICA | **HYDRAULISCHE ANLAGE** | **INSTÁLAÇION HIDRÁULICA** | **HYDRAULISCH SYSTEEM**

SEC. 7

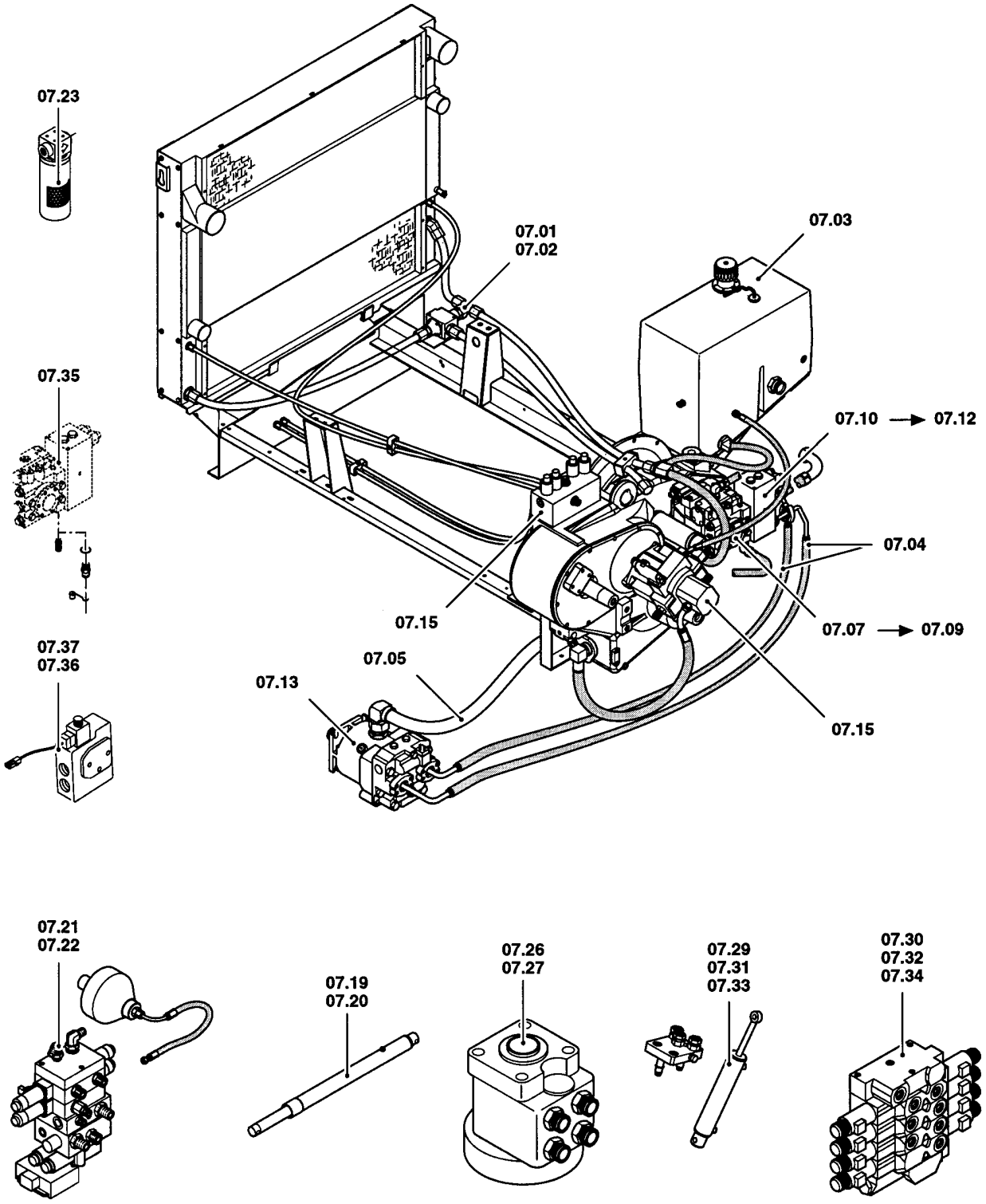

ссылка	Номер детали	Кол-во	Описание

07.01(01) HYDRAULICS FOR IVECO ENGINE

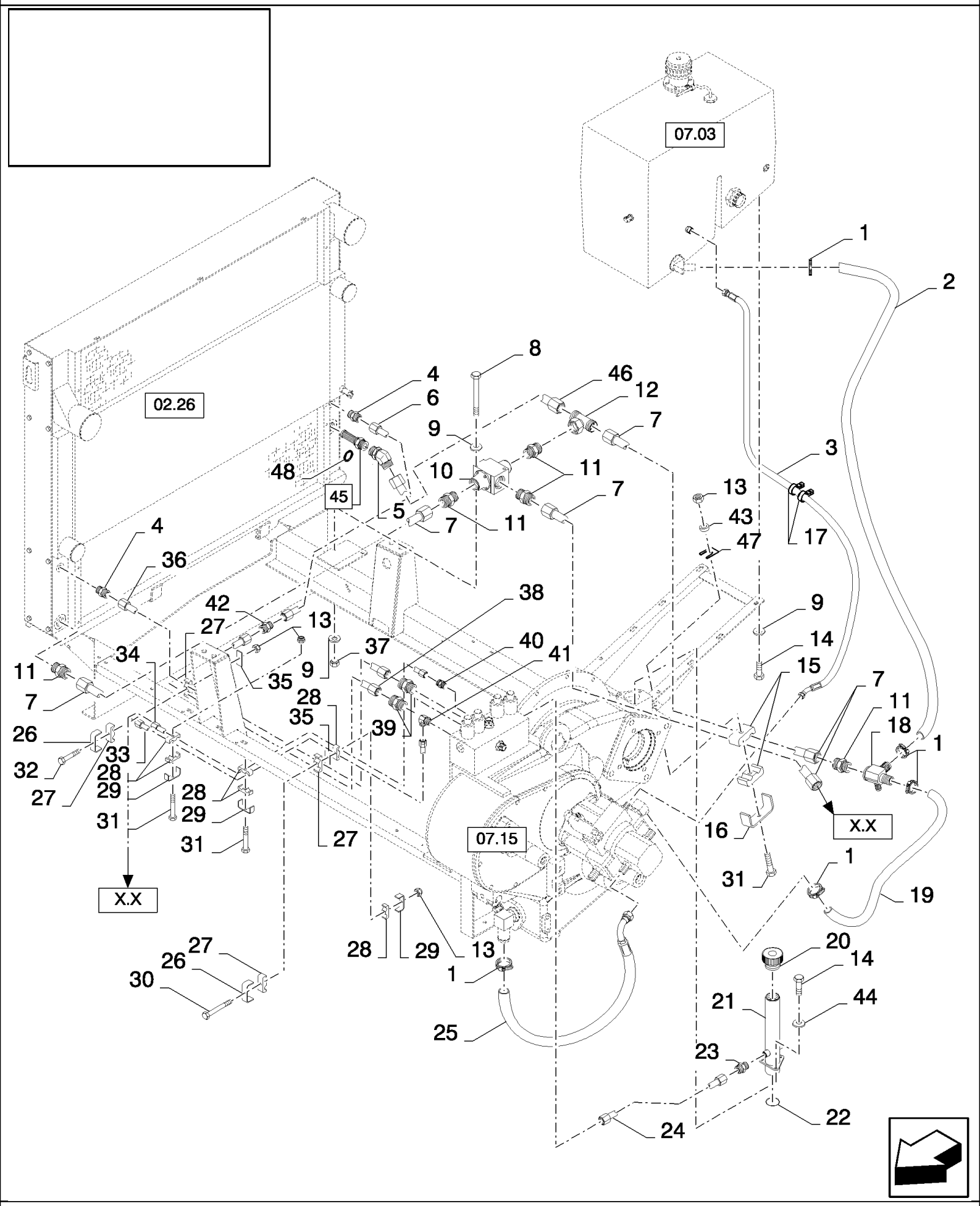

CX880 COMBINE - BASE UNIT (2/01-)

07.01(01) HYDRAULICS FOR IVECO ENGINE

ссылка	Номер детали	Кол-во	Описание
1	513309	5	CLAMP, HOSE, #24, 1.06/2.00 Type F Worm,
2	86596909	1	HOSE,
3	84064050	1	HOSE, FLEXIBLE,
4	86579679	2	CONNECTOR, HYD., 1"-14 ORFS x M18 x 1.5 ORB, , SEE FIGURE 07.502
5	84100179	1	CONNECTOR, HYD., , BSN C375
6	84431225	1	TUBE, HYD, , BSN C375
6	84449543	1	TUBE, HYD, , FOR CX860 ONLY, ASN D376
6	84452036	1	TUBE, HYD, , FOR CX880 ONLY, ASN D376
7	NS	AR	NOT SERVICED, Pipe, DIA=28MM, SEE FIGURE 07.501
8	412215	2	BOLT, Hex, M8 x 100, 8.8,
8	86508571	2	SCREW, Hex, M8 x 90, 8.8, Cap, HH, CL8.8, M8 x 1.25 x 90
9	322358	14	WASHER, SPRING, Belleville, M8,
9	87325611	4	WASHER, LOCK,
9	87325609	4	WASHER, LOCK,
10	84074158	1	THERMOSTAT,
11	84074173	5	CONNECTOR, HYD., , BSN C347
11	84074173	4	CONNECTOR, HYD., , ASN D348
12	84041626	1	CONNECTION, 3 WAY,
13	412152	4	NUT, LOCK, M6 x 1, Cl 8.8,
14	120104	AR	SCREW, Hex, M8 x 20, 8.8,
14	80043140	AR	BOLT, Hex, M10 x 30, 8.8, M8x30
15	457547	2	CLAMP,
16	743320	1	SUPPORT,
17	86566990	2	STRAP, CABLE,
18	84100211	1	CONNECTOR, HYD., , BSN C347
18	84441410	1	CONNECTOR, HYD., , ASN D348
19	84064006	1	HOSE,
20	86570754	1	CAP,
21	86583340	1	TUBE, , FOR CX860 ONLY, BSN C383
21	87031223	1	TUBE, , FOR CX860 ONLY, ASN D384
21	86583340	1	TUBE, , FOR CX880 ONLY, BSN C347
21	84448134	1	TUBE, , FOR CX880 ONLY, BSN F348383
21	84455978	1	TUBE, , FOR CX880 ONLY, ASN D384
22	272470	1	O-RING, -129, 70 Duro, 1.549" ID x .103" Thk,
23	86580177	1	CONNECTOR, HYD., 11/16"-16 ORFS x M12 x 1.5 ORB, , SEE FIGURE 07.502
24	86589925	1	TUBE, HYD,
25	84068157	1	HOSE, FLEXIBLE,
26	431942	2	SUPPORT, Hex Hd, #10-32 x 1/2",
27	430356	4	CLAMP,
28	430357	6	CLAMP,
29	431941	3	SUPPORT,
30	86508570	1	SCREW, Hex, M6 x 80, 8.8,
31	86508569	3	BOLT, Hex, M6 x 70, 8.8,
32	120056	1	SCREW, Hex, M6 x 50, 8.8,

ссылка	Номер детали	Кол-во	Описание
33	84431257	1	TUBE, HYD,
34	86596212	1	TUBE, HYD,
35	434103	2	PLATE,
36	84431234	1	TUBE, HYD, , BSN C375
36	84449548	1	TUBE, HYD, , ASN D376
37	89706690	2	NUT, M8, Cl 8,
38	84431206	1	TUBE, HYD,
39	86579680	2	CONNECTOR, HYD., 1"-14 ORFS x M22 x 1.5 ORB, , SEE FIGURE 07.502
40	86579674	1	CONNECTOR, HYD., 13/16"-16 ORFS x M14 x 1.5 ORB, , SEE FIGURE 07.502
41	86579689	1	ELBOW, 90є, 13/16"-18 ORFS x M14 x 1.5 ORB, , SEE FIGURE 07.502
42	84431473	1	CONNECTOR, HYD., , SEE FIGURE 07.502
43	322357	1	WASHER, SPRING, Belleville, M6, , ASN D226
44	322358	1	WASHER, SPRING, Belleville, M8, , BSN C225
44	80681	1	WASHER, LOCK, 5/16", , ASN D226
45	84453604	1	FILTER, OIL COOLER, (48), ASN D376
46	NS	AR	NOT SERVICED, DIA.=28MM, SEE FIGURE 07.502, BSN C375
46	84449643	1	HOSE, FLEXIBLE, , FOR CX860 ONLY, ASN D376
46	84452037	1	HOSE, HYDRAULIC, , FOR CX880 ONLY, ASN D376
47	481489	AR	PLATE, ADJUSTING, , ASN D376
48	86598104	1	O-RING, Cl 6, 26.6MM ID x 2.9 Thk, , ASN D376

07.03(01) HYDRAULIC TANK - C495

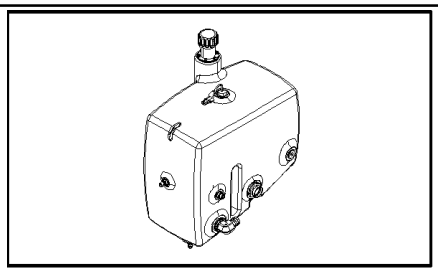

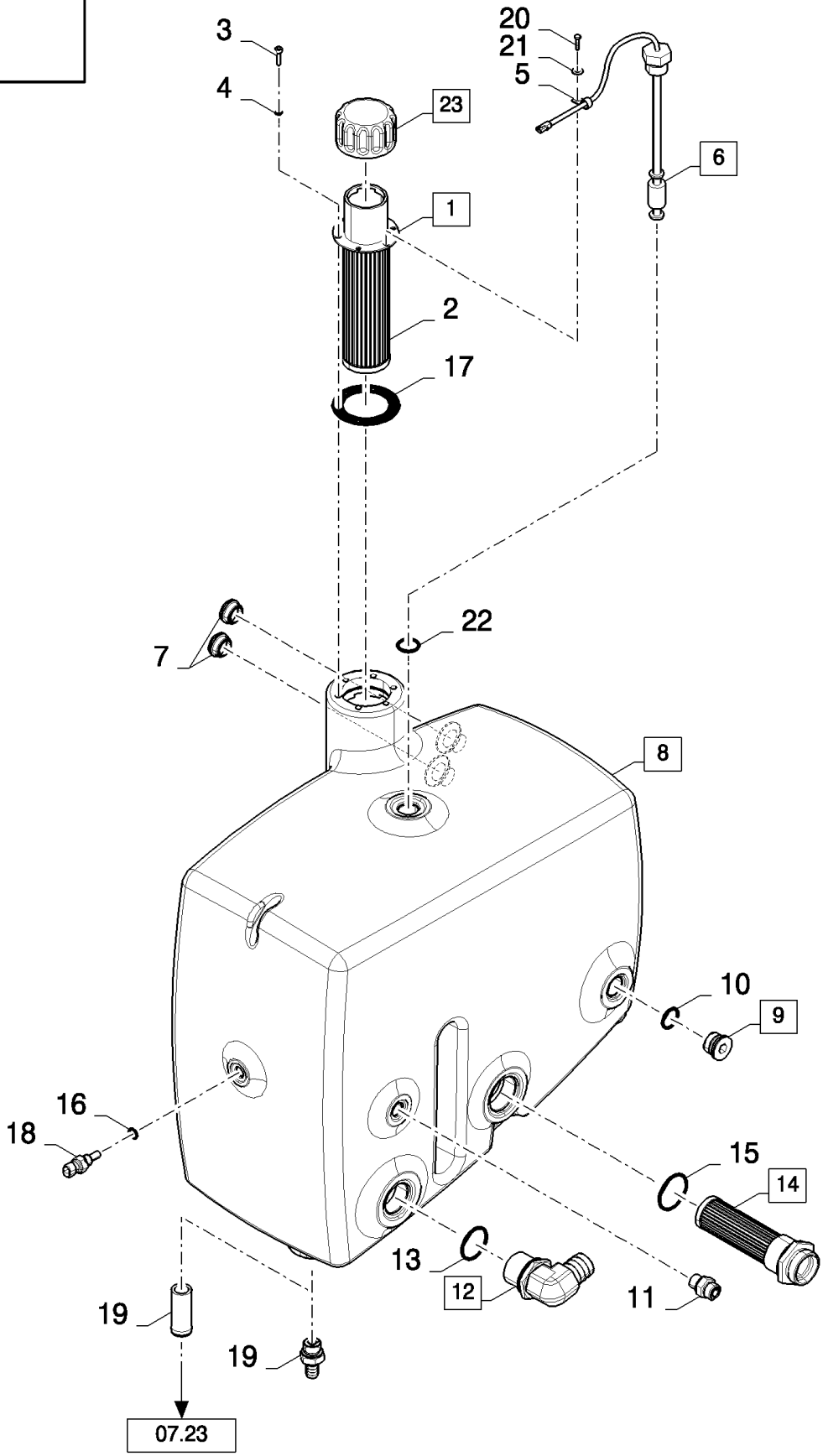

CX880 COMBINE - BASE UNIT (2/01-)

07.03(01) HYDRAULIC TANK - C495

ссылка	Номер детали	Кол-во	Описание
1	9508294	1	CAP, FILLER, (2,17,23)
2	9811443	1	FILTER, ELEMENT, UCC, BSN C411
2	87054105	1	KIT, , ASN D412
3	86050276	6	BOLT, Hex, M5 x 16, 8.8, Full Thd,
3	14304321	6	SCREW, Hex Soc Hd, M5 x 20, 8.8, M5x20
4	140014	6	WASHER, M5 x 10 x 1,
5	853764	1	CLAMP, 5/16", Insul, 5/16" Bolt, , BSN C225
5	9839372	1	CLAMP, , ASN D226
6	86619910	1	SENSOR, (22)
7	84071596	2	LEVEL GAUGE CONTROL,
8	86596900	1	RESERVOIR, HYDRAULIC OIL, (19), BSN C435
8	84452702	1	RESERVOIR, HYDRAULIC OIL, , ASN D436
9	86598048	1	PLUG, Hex Soc, M27 x 2, ORB, (10)
10	86598103	1	O-RING, Cl 6, 23.6MM ID x 2.9 Thk,
11	86579676	1	CONNECTOR, HYD., 13/16"-16 ORFS x M18 x 1.5 ORB, , SEE FIGURE 07.502
12	86597766	1	CONNECTOR, HYD., (13), BSN C225
12	86597763	1	CONNECTOR, HYD., (13), ASN D226
13	9991976	1	O-RING, -018, 90 Duro, .739" ID x .070" Thk, , BSN C225
13	86598105	1	O-RING, Cl 6, 38.6MM ID x 2.9 Thk, , ASN D226
14	84100813	1	FILTER, STRAINER, (15)
15	86583917	1	O-RING, Cl 6, 44.6MM ID x 2.9 Thk,
16	86598099	1	O-RING, Cl 6, 11.3MM ID x 2.2 Thk, , ASN D226
17	84037210	1	KIT, SEALS, UCC, BSN C411
17	87054107	1	KIT, SEALS, , ASN D412
18	86571273	1	SENSOR,
19	86596829	1	CONNECTOR, HYD., , BSN C435
19	84454544	1	NIPPLE, LUBE, , ASN D436
20	322358	1	WASHER, SPRING, Belleville, M8,
21	120104	1	SCREW, Hex, M8 x 20, 8.8,
22	9991976	1	O-RING, -018, 90 Duro, .739" ID x .070" Thk, , BSN C383
22	167266	1	O-RING, 12-1, 90 Duro, .924 ID x .116" Thk, , ASN D384
23	87054106	1	CAP, FILLER, (17), ASN D412

07.03(02) HYDRAULIC TANK - D496

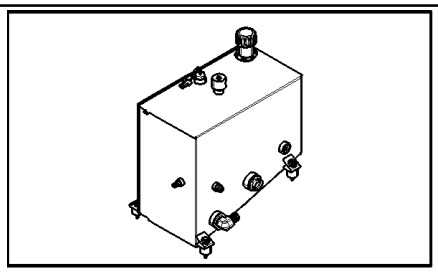

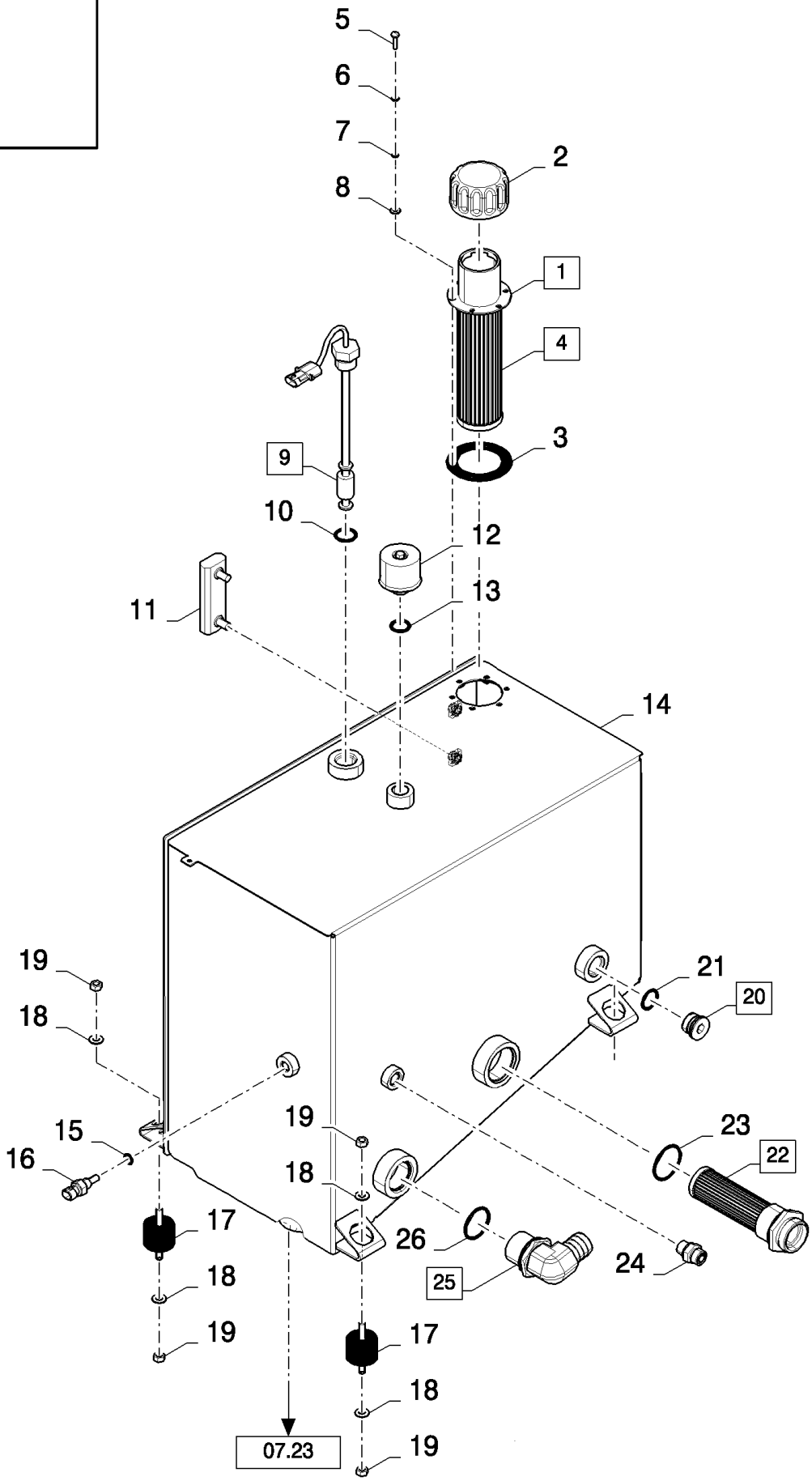

CX880 COMBINE - BASE UNIT (2/01-)

07.03(02) HYDRAULIC TANK - D496

ссылка	Номер детали	Кол-во	Описание
1	87394395	1	FILTER, HYDRAULIC OIL, (2 to 3)
2	87394398	1	CAP, FILLER,
3	87054107	1	KIT, SEALS,
4	87054105	1	KIT, (3)
5	86511827	6	SCREW, Cross Pan Hd, M5 x 20,
6	140014	6	WASHER, M5 x 10 x 1,
7	373817	6	ELEMENT, SEALING,
8	446307	6	SEALRING,
9	86619910	1	SENSOR, (10)
10	167266	1	O-RING, 12-1, 90 Duro, .924 ID x .116" Thk,
11	923011	1	INDICATOR,
12	84457330	1	BREATHER,
13	220022	1	SEALRING,
14	87387619	1	RESERVOIR, HYDRAULIC OIL,
15	86598099	1	O-RING, Cl 6, 11.3MM ID x 2.2 Thk,
16	86571273	1	SENSOR,
17	393802	4	SHOCK ABSORBER,
18	322358	8	WASHER, SPRING, Belleville, M8,
19	9706690	8	NUT, M8, Cl 8,
20	86598048	1	PLUG, Hex Soc, M27 x 2, ORB, (21)
21	86598103	1	O-RING, Cl 6, 23.6MM ID x 2.9 Thk,
22	84100813	1	FILTER, STRAINER, (23)
23	86583917	1	O-RING, Cl 6, 44.6MM ID x 2.9 Thk,
24	86579676	1	CONNECTOR, HYD., 13/16"-16 ORFS x M18 x 1.5 ORB,
25	86597763	1	CONNECTOR, HYD., (26)
26	9991976	1	O-RING, -018, 90 Duro, .739" ID x .070" Thk,

07.04(01) HYDROSTATIC LINES

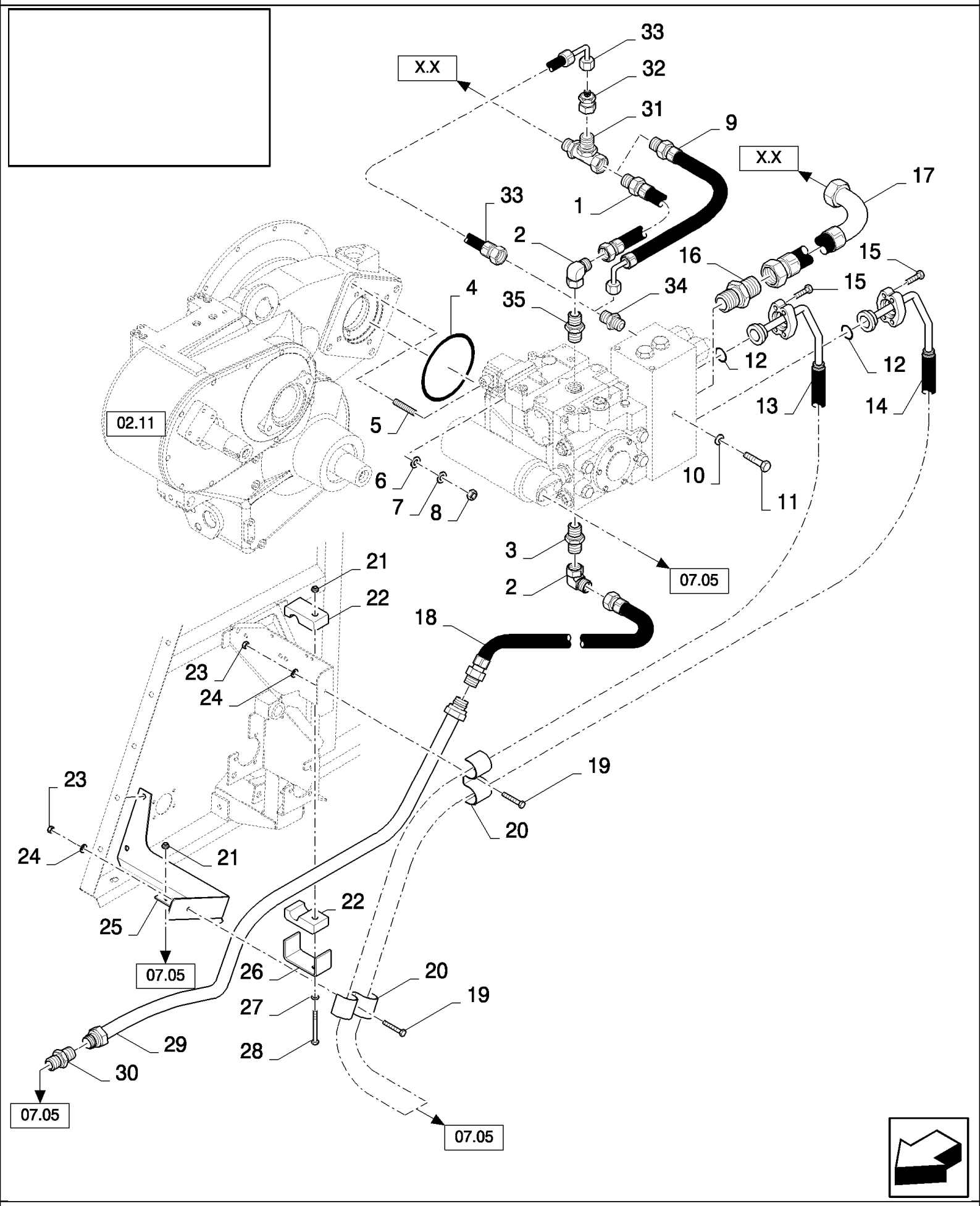

CX880 COMBINE - BASE UNIT (2/01-)

07.04(01) HYDROSTATIC LINES

ссылка	Номер детали	Кол-во	Описание
1	84068003	1	HOSE, FLEXIBLE,
2	457573	AR	ELBOW,
3	9818287	1	CONNECTOR, HYD., , FOR CX880 ONLY, FOR CX860 ONLY, FOR CX780, CX820, CX840 ONLY
3	9511910	1	CONNECTOR, HYD., , FOR CX720, CX740, CX760 ONLY
4	84817130	1	O-RING, , FOR CX780, CX820, CX840 ONLY, FOR CX860 ONLY, FOR CX880 ONLY
4	84062674	1	O-RING, , FOR CX720, CX740, CX760 ONLY
5	412599	4	STUD, , FOR CX780, CX820, CX840 ONLY, FOR CX880 ONLY, FOR CX860 ONLY
5	9501647	4	STUD, , FOR CX720, CX740, CX760 ONLY
6	84058945	4	WASHER, , FOR CX780, CX820, CX840 ONLY, FOR CX860 ONLY, FOR CX880 ONLY
6	140086	4	WASHER, , FOR CX720, CX740, CX760 ONLY
7	140046	2	WASHER, Belleville, M12, , FOR CX720, CX740, CX760 ONLY
8	100020	4	NUT, M16, Cl 8, , FOR CX780, CX820, CX840 ONLY
8	9706685	4	NUT, M12, Cl 8, , FOR CX720, CX740, CX760 ONLY
9	84807332	1	HOSE, FLEXIBLE,
10	140046	1	WASHER, Belleville, M12,
11	43151	1	SCREW, Hex, M12 x 20, 8.8, Full Thd,
12	14464080	2	O-RING, -222, 70 Duro, 1.484" ID x .139" Thk, , FOR CX780, CX820, CX840 ONLY, FOR CX880 ONLY, FOR CX860 ONLY
12	353108	2	O-RING, -219, 70 Duro, 1.296" ID x .139" Thk, , FOR CX720, CX740, CX760 ONLY
13	84100047	1	HOSE, FLEXIBLE, , FOR CX780, CX820, CX840 ONLY, BSN C385
13	84819601	1	HOSE, HYDRAULIC, , FOR CX780, CX820, CX840 ONLY, ASN D386
13	84100045	1	HOSE, FLEXIBLE, , FOR CX720, CX740, CX760 ONLY, BSN C385
13	84819599	1	HOSE, HYDRAULIC, , FOR CX720, CX740, CX760 ONLY, ASN D386
13	84100049	1	HOSE, FLEXIBLE, , FOR CX860 ONLY, FOR CX880 ONLY, BSN C385
13	84817620	1	HOSE, HYDRAULIC, , FOR CX860 ONLY, FOR CX880 ONLY, ASN D386
14	84100046	1	HOSE, FLEXIBLE, , FOR CX780, CX820, CX840 ONLY, BSN C385
14	84819600	1	HOSE, HYDRAULIC, , FOR CX780, CX820, CX840 ONLY, ASN D386
14	84100044	1	HOSE, FLEXIBLE, , FOR CX720, CX740, CX760 ONLY, BSN C385
14	84819598	1	HOSE, HYDRAULIC, , FOR CX720, CX740, CX760 ONLY, ASN D386
14	84100048	1	HOSE, FLEXIBLE, , FOR CX860 ONLY, FOR CX880 ONLY, BSN C385
14	84817619	1	HOSE, HYDRAULIC, , FOR CX860 ONLY, FOR CX880 ONLY, ASN D386
15	84015554	8	BOLT, Hex, 1/2"-13 x 1 3/4", 12.9, , FOR CX860 ONLY, FOR CX880 ONLY, FOR CX780, CX820, CX840 ONLY
15	84015552	8	BOLT, Hex, 7/16"-14 x 1/2", 12.9, , FOR CX720, CX740, CX760 ONLY
16	84100797	1	CONNECTOR, HYD.,
17	84807130	1	HOSE, HYDRAULIC, , FOR CX780, CX820, CX840 ONLY, FOR CX880 ONLY, FOR CX860 ONLY
17	84807130	1	HOSE, HYDRAULIC, , FOR CX720, CX740, CX760 ONLY, BSN C315
17	84818035	1	HOSE, FLEXIBLE, , FOR CX720, CX740, CX760 ONLY, ASN D316
18	9511017	1	HOSE,
19	300382	2	BOLT, Hex, M8 x 60, 8.8, Full Thd, M8x60
20	84053483	2	CLAMP, , BSN C385
20	84444101	2	CLAMP, , ASN D386
21	353308	2	NUT, M6 x 1, Cl 8,
22	457546	2	CLAMP,

ссылка	Номер детали	Кол-во	Описание
23	89706690	2	NUT, M8, Cl 8,
24	322358	2	WASHER, SPRING, Belleville, M8,
25	84989668	1	SUPPORT, , BSN C237
25	84440491	1	SUPPORT, , BSN F238439
25	84453720	1	SUPPORT, , ASN D440
26	743318	1	SUPPORT,
27	140015	1	WASHER, 6MM
28	86508569	1	BOLT, Hex, M6 x 70, 8.8, M6x70
29	NS	AR	NOT SERVICED, PIPE, DIA=28MM, SEE FIGURE 07.501
30	457545	1	CONNECTOR, HYD.,
31	9507672	1	CONNECTION, 3 WAY, , FOR CX720, CX740, CX760 ONLY, BSN C315
32	84015503	1	CONNECTOR, HYD., , FOR CX720, CX740, CX760 ONLY, BSN C315
33	9839226	1	HOSE, , FOR CX720, CX740, CX760 ONLY, BSN C315
34	84077400	1	CONNECTOR, HYD., , FOR CX720, CX740, CX760 ONLY, BSN C315
35	9818287	1	CONNECTOR, HYD., , FOR CX780, CX820, CX840, CX860, CX880 ONLY, BSN C281
35	84443963	1	CONNECTOR, HYD., , FOR CX780, CX820, CX840, CX860, CX880 ONLY, ASN D282
35	9511910	1	CONNECTOR, HYD., , FOR CX720, CX740, CX760 ONLY

07.05(01) HYDROSTATIC LINES

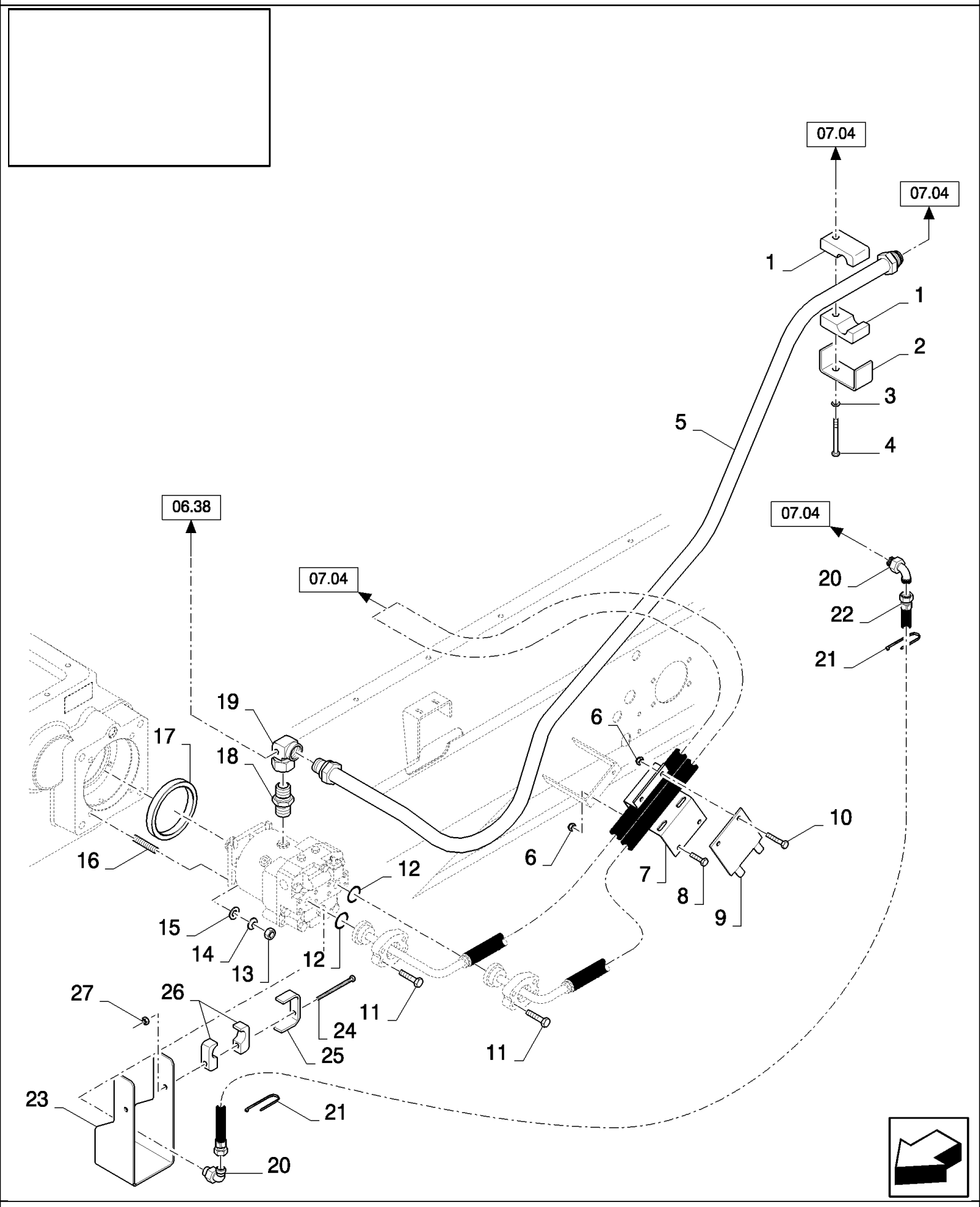

CX880 COMBINE - BASE UNIT (2/01-)

07.05(01) HYDROSTATIC LINES

ссылка	Номер детали	Кол-во	Описание
1	457546	2	CLAMP,
2	743318	1	SUPPORT,
3	140015	1	WASHER, 6MM
4	86508569	1	BOLT, Hex, M6 x 70, 8.8, M6x70
5	NS	AR	NOT SERVICED, PIPE , DIA=28MM, SEE FIGURE 07.501
6	86629542	4	NUT, LOCK, M8 x 1.25, Cl 8,
7	84069548	1	PLATE,
8	43127	2	BOLT, Hex, M8 x 25, 8.8,
9	84069549	1	PLATE,
10	120106	2	BOLT, Hex, M8 x 40, 8.8, Full Thd,
11	84015552	8	BOLT, Hex, 7/16"-14 x 1/2", 12.9, , FOR CX720, CX740, CX760 ONLY, FOR CX780, CX820, CX840 ONLY
11	84015554	8	BOLT, Hex, 1/2"-13 x 1 3/4", 12.9, , FOR CX860 ONLY, FOR CX880 ONLY
12	353108	2	O-RING, -219, 70 Duro, 1.296" ID x .139" Thk, , FOR CX780, CX820, CX840 ONLY, FOR CX720, CX740, CX760 ONLY
12	14464080	2	O-RING, -222, 70 Duro, 1.484" ID x .139" Thk, , FOR CX880 ONLY, FOR CX860 ONLY
13	9706685	4	NUT, M12, Cl 8, , FOR CX720, CX740, CX760 ONLY, FOR CX780, CX820, CX840 ONLY
13	100020	4	NUT, M16, Cl 8, , FOR CX860 ONLY, FOR CX880 ONLY
14	140046	4	WASHER, Belleville, M12, , FOR CX780, CX820, CX840 ONLY, FOR CX720, CX740, CX760 ONLY
14	84058945	4	WASHER, , FOR CX880 ONLY, FOR CX860 ONLY
15	140086	4	WASHER, , FOR CX720, CX740, CX760 ONLY, FOR CX780, CX820, CX840 ONLY, BSN C439
15	86592701	4	WASHER, M12 x 35 x 5, HT, , FOR CX780, CX820, CX840 ONLY, FOR CX720, CX740, CX760 ONLY, ASN D440
16	9501647	4	STUD, , FOR CX720, CX740, CX760 ONLY, FOR CX780, CX820, CX840 ONLY
16	110030	4	STUD, , FOR CX860 ONLY, FOR CX880 ONLY
17	84071765	1	RING, , FOR CX780, CX820, CX840 ONLY, FOR CX720, CX740, CX760 ONLY
18	9511910	1	CONNECTOR, HYD., , FOR CX720, CX740, CX760 ONLY, FOR CX780, CX820, CX840 ONLY
18	9818287	1	CONNECTOR, HYD., , FOR CX880 ONLY, FOR CX860 ONLY
19	84320920	1	ELBOW,
20	84018535	2	ELBOW, , ASN D348
21	396718	AR	STRAP, , ASN D348
22	84819549	1	HOSE, HYDRAULIC, , ASN D348
23	84449216	1	PROTECTING COVER, , ASN D348
24	397985	2	BOLT, Hex, M6 x 70, 8.8, Full Thd, , ASN D348
25	743318	2	SUPPORT, , ASN D348
26	457546	4	CLAMP, , ASN D348
27	353308	2	NUT, M6 x 1, Cl 8, , ASN D348

07.06(01) HYDROSTATIC PUMP WITH BRAKE MANIFOLD

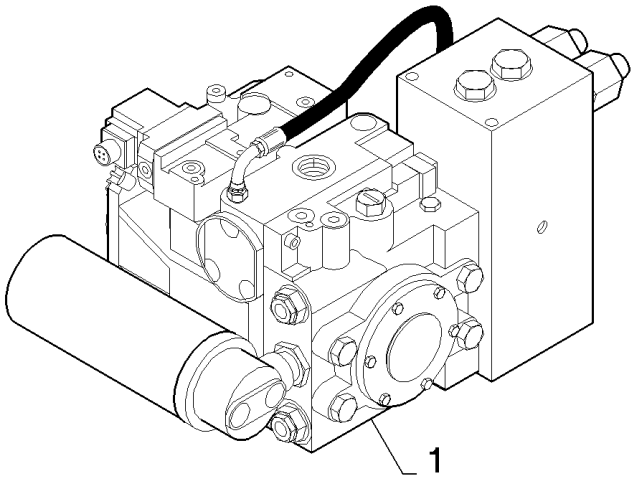

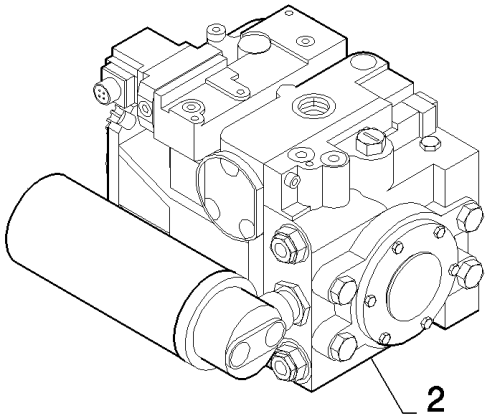

CX880 COMBINE - BASE UNIT (2/01-)

07.06(01) HYDROSTATIC PUMP WITH BRAKE MANIFOLD

ссылка	Номер детали	Кол-во	Описание
1	84320573	1	PUMP, HYDROSTATIC, 100cc / 210 bar, FOR CX720, CX740, CX760 ONLY, BSN C315
1	84320574	1	PUMP, HYDROSTATIC, 110cc / 180 bar, FOR CX780, CX820, CX840 ONLY, BSN C347
1	84320575	1	PUMP, HYDROSTATIC, 130cc / 180 bar, FOR CX860 ONLY, BSN C347
1	84400417	1	PUMP, HYDROSTATIC, 130cc / 280 bar, FOR CX880 ONLY, BSN C347
2	84817313	1	PUMP, HYDROSTATIC, 100cc / 175 bar, NO COMPONENTS YET AVAILABLE, FOR CX720, CX740, CX760 ONLY, ASN D316
2	84819215	1	PUMP, HYDROSTATIC, 100cc / 140 bar, FOR CX780, CX820, CX840 ONLY, NO COMPONENTS YET AVAILABLE, ASN D348
2	84817315	1	PUMP, HYDROSTATIC, 130cc / 140 bar, NO COMPONENTS YET AVAILABLE, FOR CX860 ONLY, ASN D348
2	84819216	1	PUMP, HYDROSTATIC, 130cc / 250 bar, FOR CX880 ONLY, NO COMPONENTS YET AVAILABLE, ASN D348

07.09(01) HYDROSTATIC PUMP, 130CC - C347

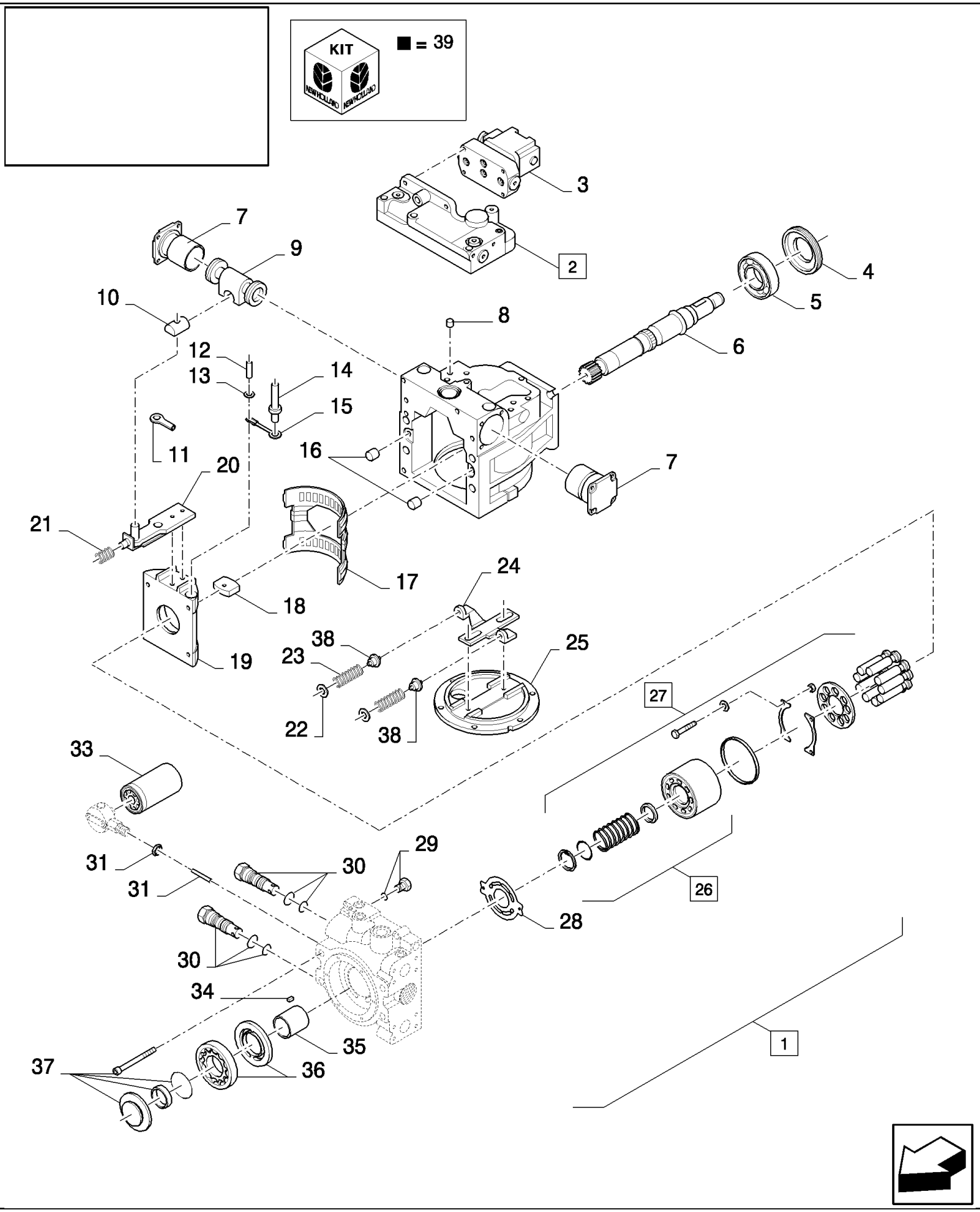

CX880 COMBINE - BASE UNIT (2/01-)

07.09(01) HYDROSTATIC PUMP, 130CC - C347

ссылка	Номер детали	Кол-во	Описание
1	84074827	1	PUMP, HYDROSTATIC, (2 to 39)
2	84041315	1	BRAKE SERVO, (3)
3	84806695	1	ELECTROMAGNET,
4	84042108	1	RING,
5	84042107	1	BEARING ASSY,
6	84806849	1	SHAFT,
7	84042102	2	SERVO STEERING CYL.,
8	9813069	3	FILTER,
9	84806847	1	SHAFT,
10	84042101	1	GUIDE,
11	84042109	1	LEVER,
12	84042089	1	PIN,
13	140013	1	WASHER, M4,
14	84042091	1	PIN,
15	84042090	1	CLIP,
16	165179	2	PIN,
17	84042083	1	BEARING ASSY,
18	84042088	1	GUIDE,
19	84806842	1	SUPPORT,
20	84042086	1	LEVER,
21	84042092	1	SPRING,
22	84042096	2	WASHER,
23	84806846	2	SPRING,
24	84806844	1	LEVER,
25	84806843	1	COVER,
26	84042084	1	KIT,
27	84806852	1	KIT, (26)
28	84806841	1	PLATE,
29	9813059	2	VALVE, HYDRAULIC,
30	84806850	2	VALVE, HYDRAULIC,
31	84041317	1	TUBE, RIGID,
32	84037209	1	NUT,
33	84031880	1	FILTER, ELEMENT,
34	84042105	1	SPRING,
35	84806848	1	SHAFT,
36	84042103	1	KIT,
37	84042106	1	KIT,
38	84806845	2	RETAINER,
39	84019068	1	KIT, SEALS,

07.12(01) BRAKE MANIFOLD 280 BAR, FOR 130CC PUMP - C347

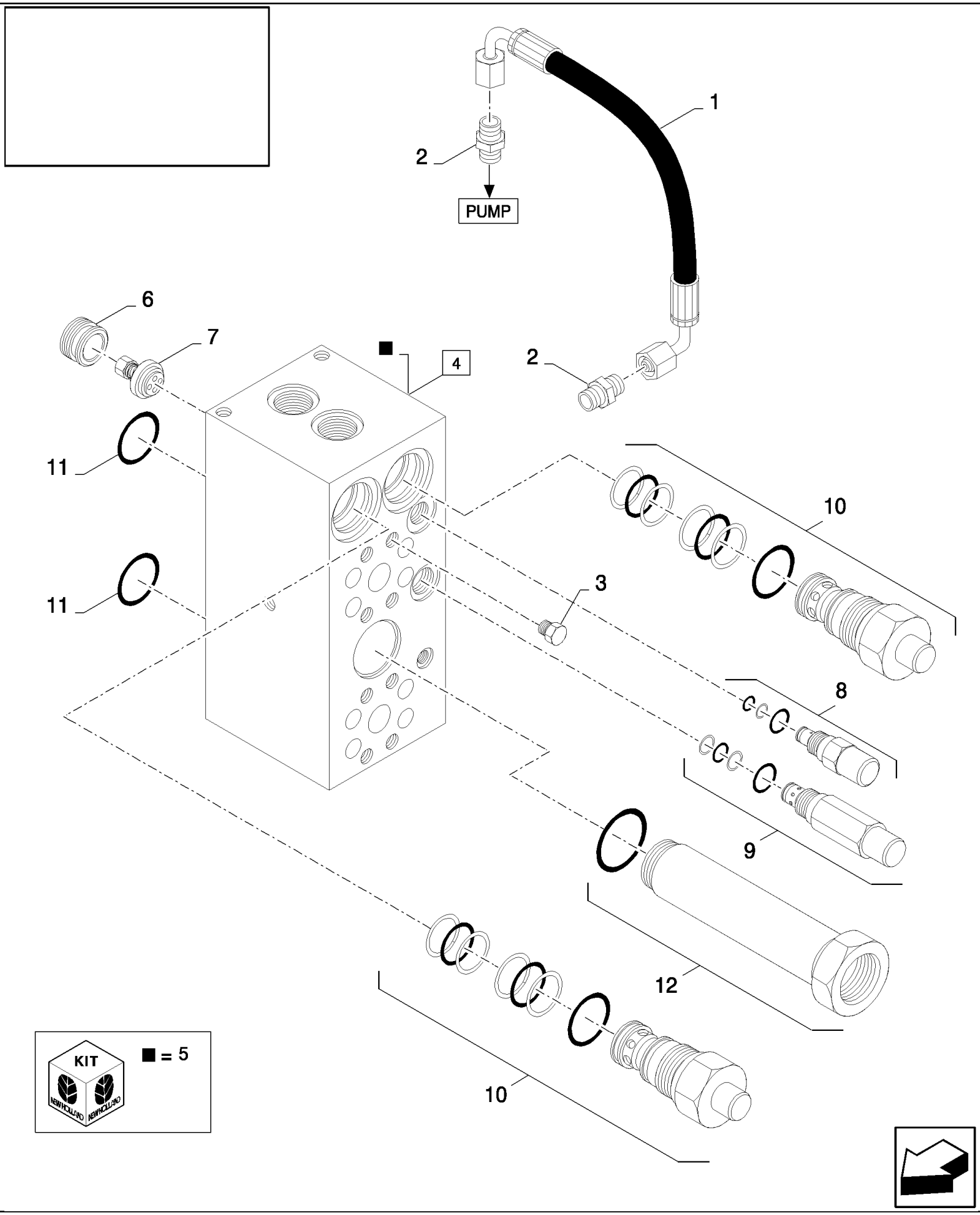

CX880 COMBINE - BASE UNIT (2/01-)

07.12(01) BRAKE MANIFOLD 280 BAR, FOR 130CC PUMP - C347

ссылка	Номер детали	Кол-во	Описание
1	84100826	1	HOSE, FLEXIBLE,
2	84400358	2	CONNECTOR, HYD.,
3	84100402	8	SCREW,
4	84320503	1	MANIFOLD, (5 to 10)
5	84806890	1	KIT, SEALS,
6	84806165	1	RETAINER,
7	84806164	1	VALVE, CHECK,
8	84806168	1	VALVE, HYDRAULIC,
9	84806167	1	VALVE, HYDRAULIC,
10	84806166	2	VALVE, HYDRAULIC,
11	84806893	2	O-RING,
12	84806894	1	O-RING,

07.14(01) HYDROSTATIC MOTOR, 130CC

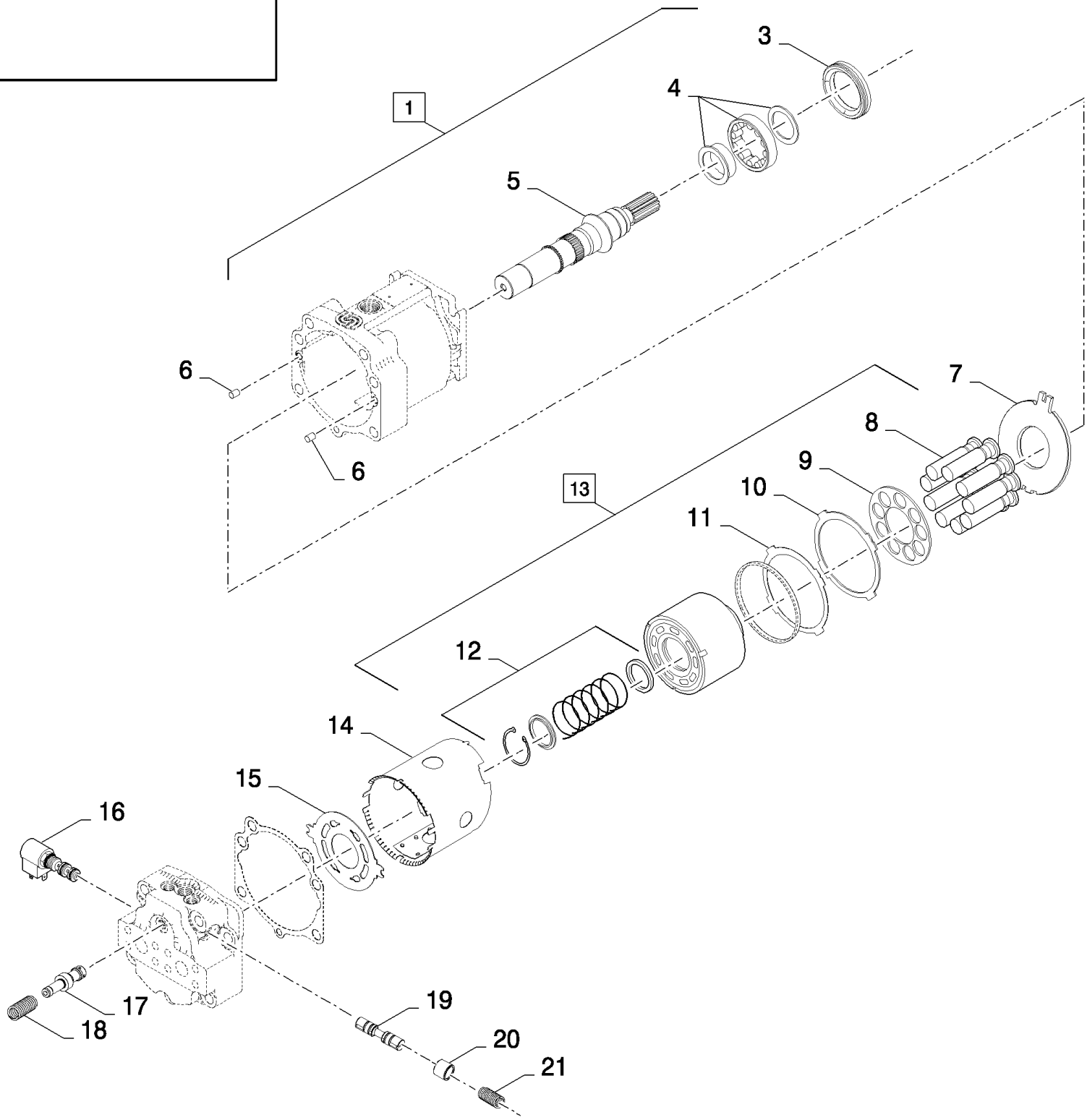

KIT ■ = 2

CX880 COMBINE - BASE UNIT (2/01-)

07.14(01) HYDROSTATIC MOTOR, 130CC

ссылка	Номер детали	Кол-во	Описание
1	84074828	1	MOTOR, HYDROSTATIC, (2 to 21), BSN C347
1	84819681	1	MOTOR, HYDROSTATIC, , ASN D348
2	84806869	1	KIT, SEALS,
3	84042108	1	RING,
4	84042107	1	BEARING ASSY,
5	84806882	1	SHAFT,
6	165179	2	PIN,
7	84806876	1	PLATE, THRUST,
8	84806870	9	PISTON,
9	84806871	1	RETAINER,
10	84806872	1	RING,
11	84806873	1	RING,
12	84042084	1	KIT,
13	84806883	1	KIT, (8 to 12)
14	84806874	1	COVER,
15	84806875	1	PLATE,
16	84807022	1	VALVE, SOLENOID,
17	84806881	1	CONE,
18	84806880	1	SPRING,
19	84806877	1	VALVE, HYDRAULIC, , BSN C347
19	84449301	1	SPOOL, , ASN D348
20	84806878	2	RING,
21	84806879	2	SPRING,

07.15(01) HYDRAULICS FOR ENGINE, PUMP AND DIVIDER

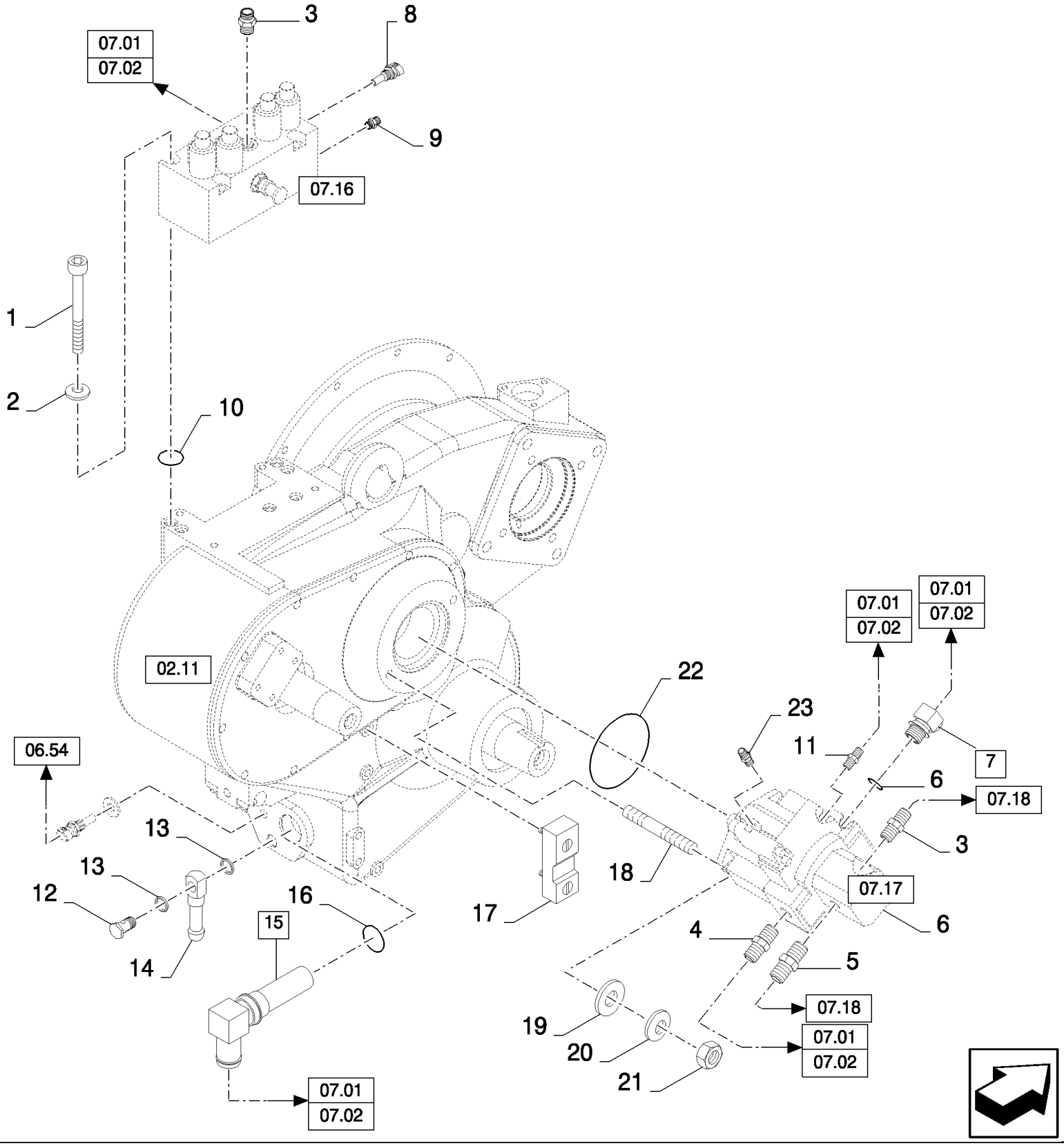

CX880 COMBINE - BASE UNIT (2/01-)

07.15(01) HYDRAULICS FOR ENGINE, PUMP AND DIVIDER

ссылка	Номер детали	Кол-во	Описание
1	84062671	4	SCREW, M10x100
2	140028	4	WASHER, M10,
3	86579680	2	CONNECTOR, HYD., 1"-14 ORFS x M22 x 1.5 ORB, , SEE FIGURE 07.502
4	86579682	1	CONNECTOR, HYD., 1 3/16"-12 ORFS x M27 x 2 ORB, , SEE FIGURE 07.502, BSN C482
4	86579683	1	CONNECTOR, HYD., 1 3/16"-12 ORFS x M33 x 2 ORB, , SEE FIGURE 07.502, ASN D483
5	86579684	1	CONNECTOR, HYD., 1 11/16"-12 ORFS x M33 x 2 ORB, , SEE FIGURE 07.502
6	86598105	1	O-RING, Cl 6, 38.6MM ID x 2.9 Thk, , BSN C482
6	86583917	1	O-RING, Cl 6, 44.6MM ID x 2.9 Thk, , ASN D483
7	86597763	1	CONNECTOR, HYD., (6), BSN C482
7	87356239	1	CONNECTOR, HYD., (6), ASN D483
8	86597585	1	SENSOR,
9	86580177	1	CONNECTOR, HYD., 11/16"-16 ORFS x M12 x 1.5 ORB, , SEE FIGURE 07.502
10	128359	6	O-RING, -016, 70 Duro, .614" ID x .070" Thk,
11	86597761	1	CONNECTOR, HYD., 13/16"-16 ORFS x M27 x 2 ORB, , BSN C482
11	86579692	1	ELBOW, 90є, 13/16"-18 ORFS x M22 x 1.5 ORB, , ASN D483
12	84100235	1	SCREW, HOLLOW,
13	220122	2	SEAL,
14	80326078	1	CONNECTOR, HYD.,
15	86525505	1	FILTER, STRAINER, (16), BSN C363
15	84452576	1	FILTER, STRAINER, (16), ASN D364
16	86598105	1	O-RING, Cl 6, 38.6MM ID x 2.9 Thk,
17	923011	1	INDICATOR,
18	321665	2	STUD,
19	394630	2	WASHER,
20	140046	2	WASHER, Belleville, M12,
21	86000021	2	NUT, M12, Cl 8, M12, BSN C363
21	9706685	2	NUT, M12, Cl 8, , ASN D364
22	9706914	1	O-RING, -045, 70 Duro, 3.989" ID x .070" Thk,
23	86596907	1	CONNECTOR, HYD., , SEE FIGURE 07.502

07.16(01) HYDRAULIC DIVIDER

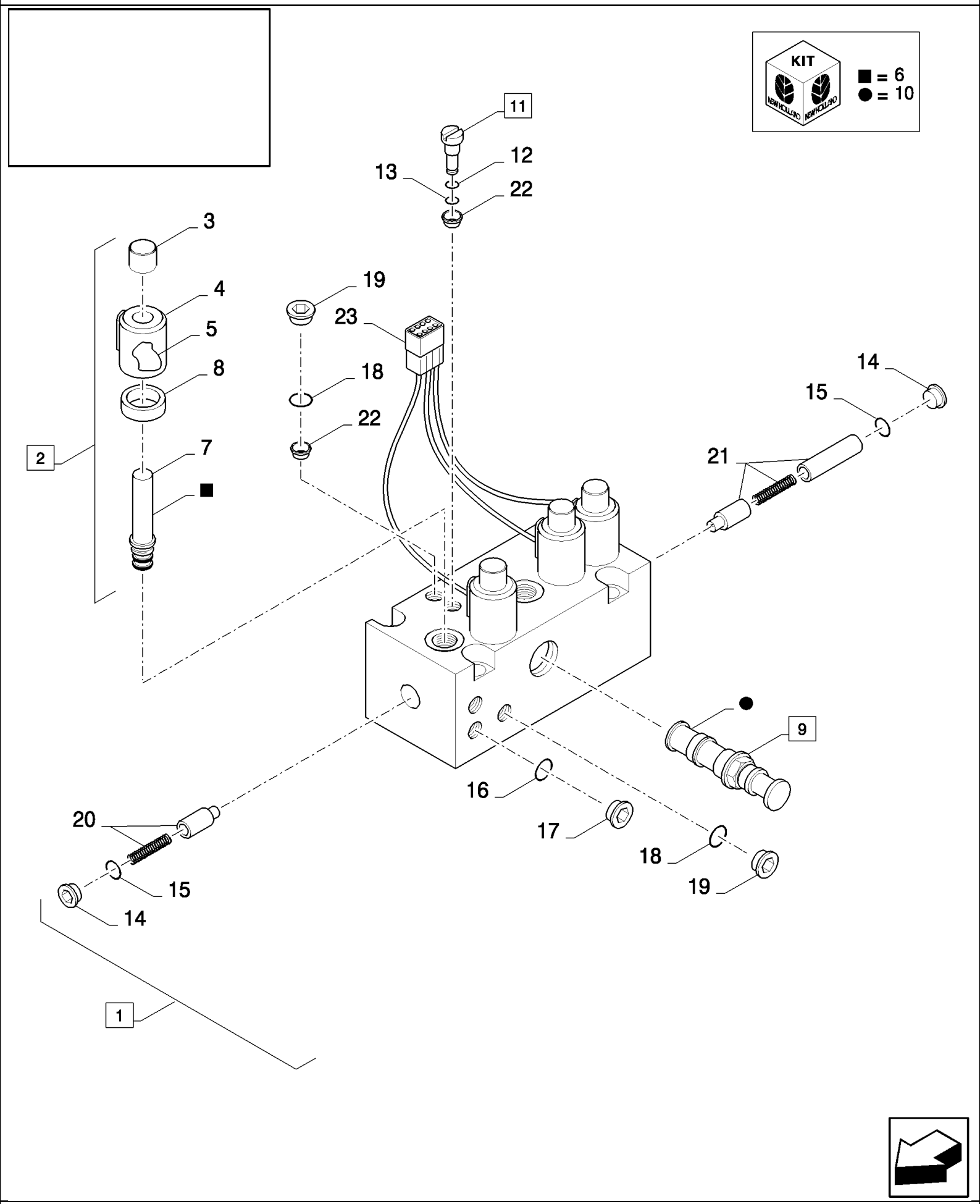

CX880 COMBINE - BASE UNIT (2/01-)

07.16(01) HYDRAULIC DIVIDER

ссылка	Номер детали	Кол-во	Описание
1	86596899	1	VALVE, HYDRAULIC, (2 to 23), BSN C479
1	87340186	1	VALVE, HYDRAULIC, , NO SUBCOMPONENTS YET AVAILABLE, IF INSTALLED ON UNITS C479 YOU HAVE TO DOWNLOAD EST SOFTWARE VERSION 4.3.0.0. AND CHOOSE THE FFL (FARM FIELD LOAD) SOFTWARE TO PREVENT SEVERE DAMAGE, ASN D480
2	86638973	4	VALVE, HYDRAULIC, (3 to 8)
3	86638982	1	NUT,
4	86638981	1	COVER,
5	86638979	1	COIL,
6	86638983	1	KIT, SEALS,
7	86638980	1	VALVE, HYDRAULIC,
8	86974012	1	SPACER,
9	86638974	1	VALVE, PRESSURE RELIEF, (10)
10	86638984	1	KIT, SEALS,
11	86638975	1	VALVE, HYDRAULIC, (12,13)
12	86010510	1	O-RING, 2-1, .239" ID x .064" Thk, 2-1, .239" ID x .064" Thk
13	86500548	1	O-RING, -006, 70 Duro, .114" ID x .070" Thk,
14	86590562	2	PLUG, Hex Soc, 3/4"-16 ORB,
15	128825	2	O-RING, 8-1, 90 Duro, .644" ID x .087" Thk,
16	86598099	3	O-RING, Cl 6, 11.3MM ID x 2.2 Thk,
17	86598044	3	PLUG, Hex Soc, M14 x 1.5, ORB,
18	165202	3	O-RING, 4-1, 90 Duro, .351" ID x .072" Thk,
19	278548	3	PLUG, Hex Soc, 7/16"-20 ORB,
20	86638977	1	KIT, REPAIR,
21	86638978	1	KIT, REPAIR,
22	86638976	1	VALVE, RESTRICTOR,
23	9861352	1	SOCKET, POWER,

07.17(01) HYDRAULIC PUMP

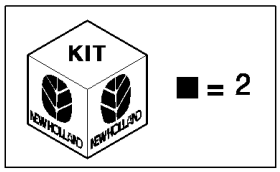

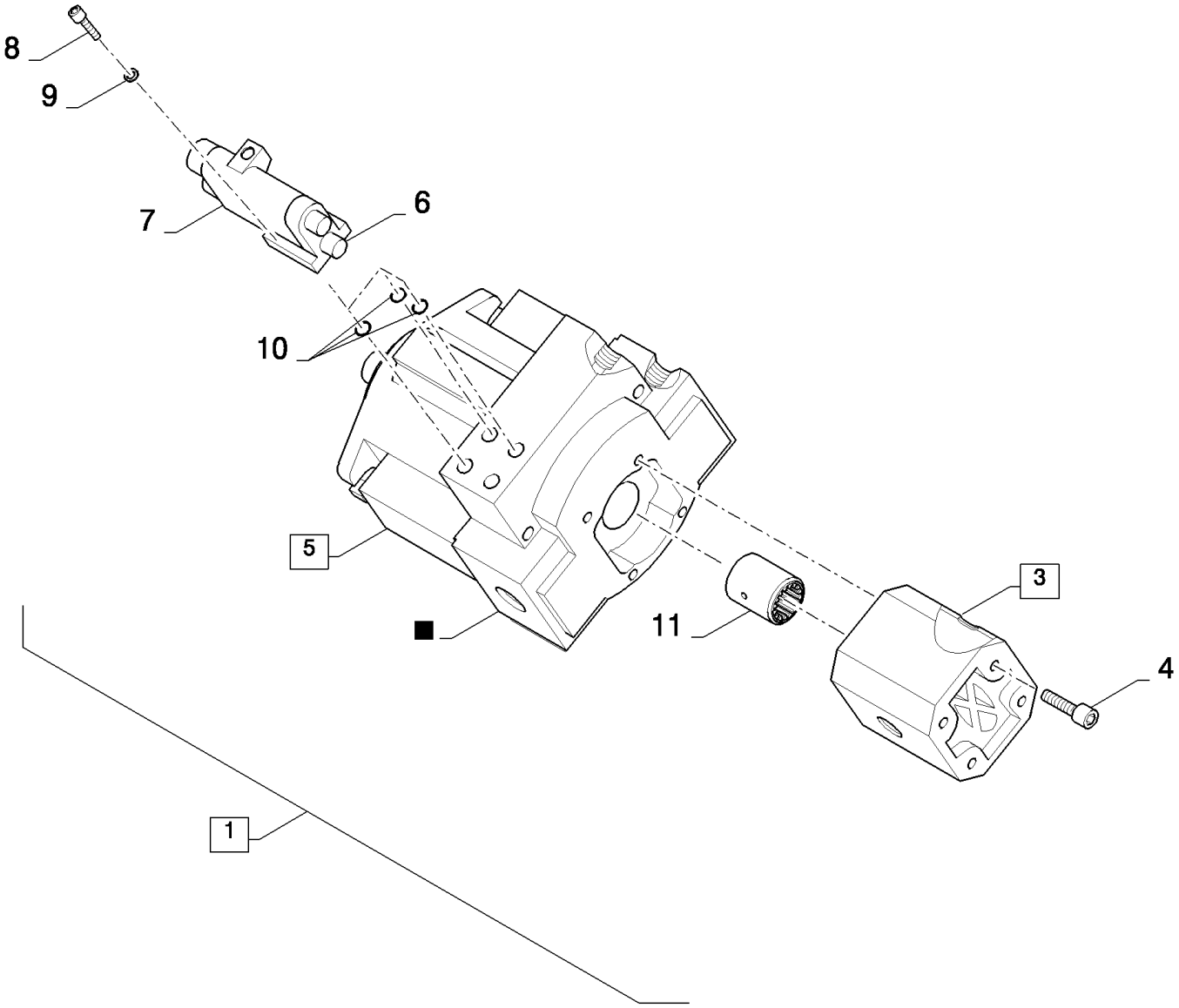

CX880 COMBINE - BASE UNIT (2/01-)

07.17(01) HYDRAULIC PUMP

ссылка	Номер детали	Кол-во	Описание
1	84320617	1	PUMP, HYDRAULIC, (2, 3, 5), BSN C482
1	84441395	1	PUMP, HYDRAULIC, (2, 3, 5), ASN D483
2	86623130	1	KIT, REPAIR, FOR BOTH PUMPS, BSN C482
2	87360821	1	KIT, HYD PUMP REPAIR, , ASN D483
3	86555101	1	PUMP, HYDRAULIC, (4), BSN C482
3	87360819	1	PUMP, HYDRAULIC, , ASN D483
4	86578526	1	BOLT, Hex, 3/8"-16 x 4 1/4", G8,
5	86623135	1	PUMP, HYDRAULIC, (6 to 11), BSN C482
5	84441403	1	PUMP, HYDRAULIC, , ASN D483
6	81872760	2	CAP,
7	84334519	1	VALVE, CONTROL, , BSN C482
7	87360820	1	VALVE, CONTROL, , ASN D483
8	81868054	4	SCREW, Hex Soc Hd, M5 x .8 x 25,
9	81867893	4	WASHER, LOCK,
10	82859294	3	O-RING,
11	87052981	1	COUPLING,

07.18(01) CYLINDER FOR UNLOADING AUGER AND LH TUBES

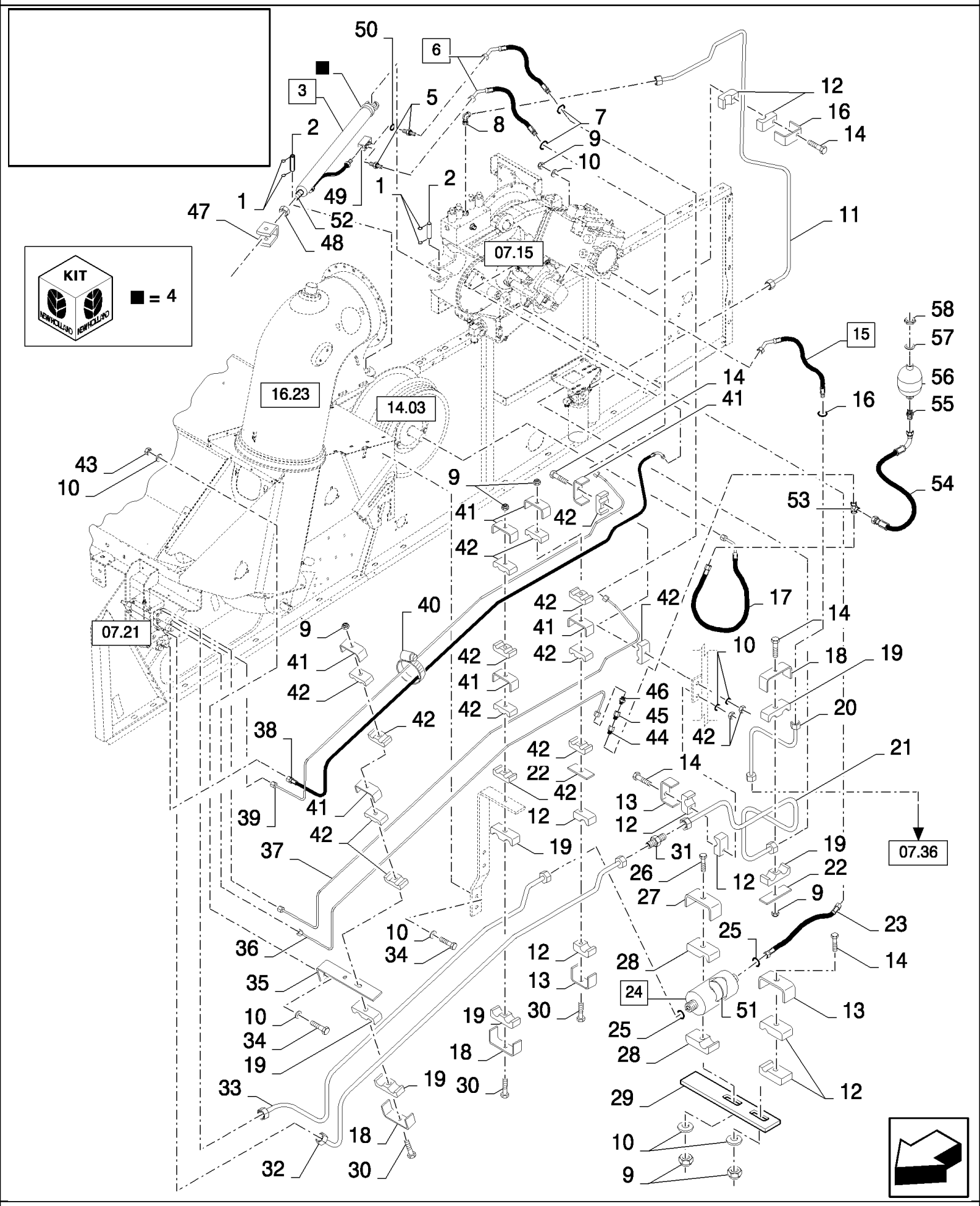

CX880 COMBINE - BASE UNIT (2/01-)

07.18(01) CYLINDER FOR UNLOADING AUGER AND LH TUBES

ссылка	Номер детали	Кол-во	Описание
1	300627	4	RING, SNAP, M19, Ext,
2	84320612	2	PIN,
3	86586808	1	HYDRAULIC CYLINDER, (4), BSN C359
3	86586808	1	HYDRAULIC CYLINDER, (4, 47 to 50,52), BSN F360423
3	84461647	1	HYDRAULIC CYLINDER, (4, 47 to 50,52), ASN D424
4	86548352	1	KIT, SEALS,
4	84989045	1	KIT, SEALS, , SV ENGRAVED IN CYLINDER
5	86579673	2	CONNECTOR, HYD., 11/16"-16 ORFS x M18 x 1.5 ORB, , SEE FIGURE 07.502
6	84068094	2	HOSE, FLEXIBLE, (7)
7	9993141	1	O-RING, -012, 90 Duro, .364" ID x .070" Thk,
8	84989393	1	ELBOW, 90є, 1"-14 ORFS x 1"-14 Fem Sw, , SEE FIGURE 07.502
9	412152	9	NUT, LOCK, M6 x 1, Cl 8.8,
10	322357	9	WASHER, SPRING, Belleville, M6,
11	84989314	1	TUBE, HYD,
12	433007	AR	CLAMP,
13	433100	AR	SUPPORT,
14	120056	5	SCREW, Hex, M6 x 50, 8.8,
15	84068312	1	HOSE, FLEXIBLE, (16)
16	9992069	1	O-RING, -016, 90 Duro, .614" ID x .070" Thk,
17	84068158	1	HOSE, FLEXIBLE,
18	431942	3	SUPPORT, Hex Hd, #10-32 x 1/2",
19	430356	6	CLAMP,
20	84431404	1	TUBE, HYD, , FOR CX720, CX740, CX760, CX780 ONLY, BSN C315
20	84448552	1	TUBE, HYD, , FOR CX720, CX740, CX760, CX780 ONLY, ASN D316
20	84431404	1	TUBE, HYD, , FOR CX820, CX840, CX860, CX880 ONLY, BSN C347
20	84448552	1	TUBE, HYD, , FOR CX820, CX840, CX860, CX880 ONLY, ASN D348
21	84989310	1	TUBE, HYD, , FOR CX820, CX840, CX860, CX880 ONLY, BSN C347
21	84448085	1	TUBE, HYD, , FOR CX820, CX840, CX860, CX880 ONLY, ASN D348
21	84431428	1	TUBE, HYD, , FOR 3 M VERSION OF CX820, CX840, CX860 ONLY, BSN C347
21	84449689	1	TUBE, HYD, , FOR 3 M VERSION OF CX820, CX840, CX860 ONLY, ASN D348
21	84431438	1	TUBE, HYD, , FOR CX720, CX740, CX760, CX780 ONLY, BSN C315
21	84448085	1	TUBE, HYD, , FOR CX720, CX740, CX760, CX780 ONLY, ASN D316
22	434103	2	PLATE,
23	84068155	1	HOSE, FLEXIBLE,
24	86525899	1	FILTER, HYDRAULIC OIL, (25, 51)
25	9991976	2	O-RING, -018, 90 Duro, .739" ID x .070" Thk,
26	86508569	1	BOLT, Hex, M6 x 70, 8.8,
27	743318	1	SUPPORT, , BSN C271
27	743320	1	SUPPORT, , ASN D272
28	457546	2	CLAMP, , BSN C271
28	457547	2	CLAMP, , ASN D272
29	84438583	1	BRACKET, , BSN C271
29	367681	1	PLATE, FIXING, , ASN D272
30	328873	3	BOLT, Hex, M6 x 120, 8.8, Full Thd,

07.18(01) CYLINDER FOR UNLOADING AUGER AND LH TUBES

ссылка	Номер детали	Кол-во	Описание
31	84100407	1	UNION, 1 3/16"-12 ORFS, , SEE FIGURE 07.502
32	84989312	1	TUBE, HYD, , FOR CX820, CX840, CX860, CX880 ONLY
32	84431432	1	TUBE, HYD, , FOR 3 M VERSION OF CX820, CX840, CX860 ONLY
32	84431436	1	TUBE, HYD, , FOR CX720, CX740, CX760, CX780 ONLY
33	84431430	1	TUBE, HYD, , FOR CX820, CX840, CX860, CX880 ONLY
33	84431426	1	TUBE, HYD, , FOR 3 M VERSION OF CX820, CX840, CX860 ONLY
33	84431434	1	TUBE, HYD, , FOR CX720, CX740, CX760, CX780 ONLY
34	86508568	3	SCREW, Hex, M6 x 16, 8.8,
35	84431987	1	SUPPORT, , BSN C359
35	84449993	1	SUPPORT, , ASN D360
36	84431337	1	TUBE, HYD, , FOR CX820, CX840, CX860, CX880 ONLY
36	84431340	1	TUBE, HYD, , FOR 3 M VERSION OF CX820, CX840, CX860 ONLY
36	84431382	1	TUBE, HYD, , FOR CX720, CX740, CX760, CX780 ONLY
37	84431322	1	TUBE, HYD, , FOR CX820, CX840, CX860, CX880 ONLY
37	84989286	1	TUBE, HYD, , FOR 3 M VERSION OF CX820, CX840, CX860 ONLY
37	84431375	1	TUBE, HYD, , FOR CX720, CX740, CX760, CX780 ONLY
38	84068159	1	HOSE, FLEXIBLE,
39	84431334	1	TUBE, HYD, , FOR CX820, CX840, CX860, CX880 ONLY
39	84989288	1	TUBE, HYD, , FOR 3 M VERSION OF CX820, CX840, CX860 ONLY
39	84431379	1	TUBE, HYD, , FOR CX720, CX740, CX760, CX780 ONLY
40	86566989	6	STRAP, CABLE,
41	431941	7	SUPPORT,
42	430357	14	CLAMP,
43	15896221	1	NUT, M6, Cl 10,
44	84062491	1	CONNECTOR, HYD.,
45	84431928	1	VALVE, HYDRAULIC,
46	86580177	1	CONNECTOR, HYD., 11/16"-16 ORFS x M12 x 1.5 ORB,
47	87031322	1	CLEVIS, , ASN D360
48	84022122	1	NUT, Thin, M24 x 2, Cl 05, , ASN D360
49	87031320	1	VALVE, CHECK, , BSN F360423
49	84461693	1	VALVE, CHECK, , ASN D424
50	87031319	1	ORIFICE, , ASN D360
51	86596434	1	FILTER, ELEMENT,
52	84462328	1	ROD, , ASN D360
53	84989848	1	CONNECTOR, HYD., , ASN D492
54	87353408	1	HOSE, FLEXIBLE, , ASN D492
55	86579673	1	CONNECTOR, HYD., 11/16"-16 ORFS x M18 x 1.5 ORB, , ASN D492
56	87371267	1	ACCUMULATOR, , ASN D492
57	140110	1	WASHER, , ASN D492
58	308823	1	NUT, M28 x 1.5, Cl 8, , ASN D492

07.19(01) HYDRAULICS TO STRAW ELEVATOR

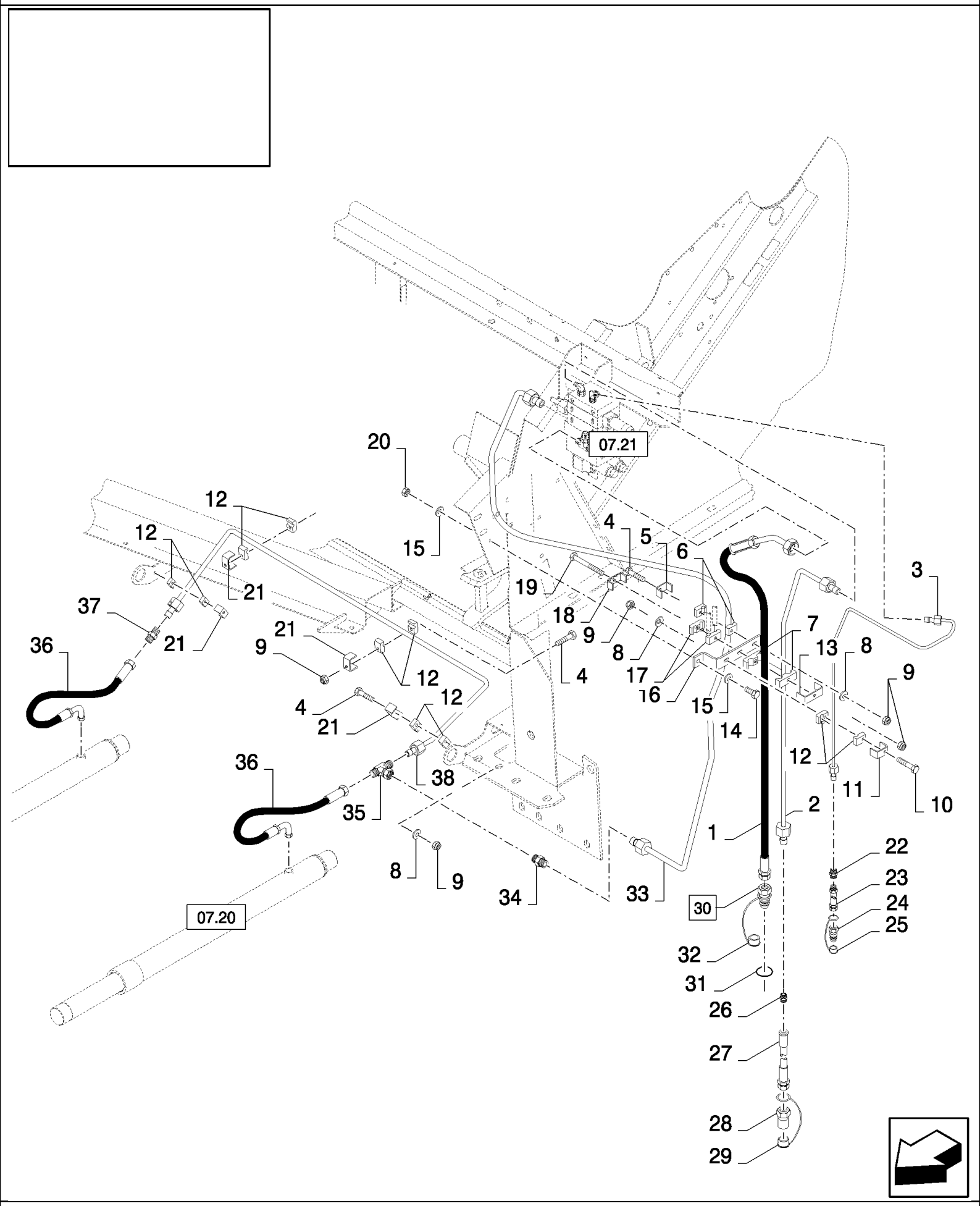

CX880 COMBINE - BASE UNIT (2/01-)

07.19(01) HYDRAULICS TO STRAW ELEVATOR

ссылка	Номер детали	Кол-во	Описание
1	84435017	1	HOSE, FLEXIBLE,
2	84989308	1	TUBE, HYD,
3	84989292	1	TUBE, HYD,
4	120056	5	SCREW, Hex, M6 x 50, 8.8,
5	433100	1	SUPPORT,
6	433007	2	CLAMP,
7	430356	2	CLAMP,
8	322357	4	WASHER, SPRING, Belleville, M6,
9	353308	7	NUT, M6 x 1, Cl 8,
10	70043118	1	PIN, M6x40
11	433101	1	SUPPORT,
12	433008	10	CLAMP,
13	431942	1	SUPPORT, Hex Hd, #10-32 x 1/2",
15	322358	2	WASHER, SPRING, Belleville, M8,
16	84989005	1	SUPPORT,
17	430357	2	CLAMP,
18	431941	1	SUPPORT,
19	86508570	1	SCREW, Hex, M6 x 80, 8.8,
20	89706690	1	NUT, M8, Cl 8,
21	442340	4	SUPPORT,
22	84431546	1	UNION, 11/16"-16 ORFS, , SEE FIGURE 07.502
23	84068626	1	HOSE, FLEXIBLE,
24	86592082	1	COUPLING, QUICK, MALE,
25	86592086	1	DUST CAP,
26	84431473	1	CONNECTOR, HYD., , SEE FIGURE 07.502
27	84068627	1	HOSE, FLEXIBLE,
28	86592080	1	COUPLING, QUICK, MALE,
29	86592084	1	DUST CAP,
30	86596889	1	COUPLING, QUICK, MALE, (31, 32)
31	9992069	1	O-RING, -016, 90 Duro, .614" ID x .070" Thk,
32	84433038	1	DUST CAP,
33	84989304	1	TUBE, HYD,
34	84431302	1	CONNECTOR, HYD., , SEE FIGURE 07.502
35	84431325	1	TEE, 13/16"-16 ORFS x 13/16"-16 Fem Sw Br,
36	84068062	2	HOSE, FLEXIBLE,
37	84431547	1	UNION, 13/16"-16 ORFS, , SEE FIGURE 07.502
38	84441222	1	TUBE, HYD, , FOR CX720, CX740, CX760, CX780 ONLY
38	84441220	1	TUBE, HYD, , FOR CX820, CX840, CX860, CX880 ONLY
14	16043224	1	BOLT, Hex, M8 x 16, 8.8, Full Thd,

07.20(01) CYLINDERS, STRAW ELEVATOR

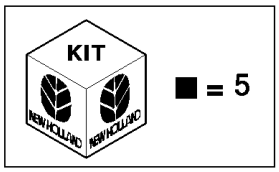

■ = 5

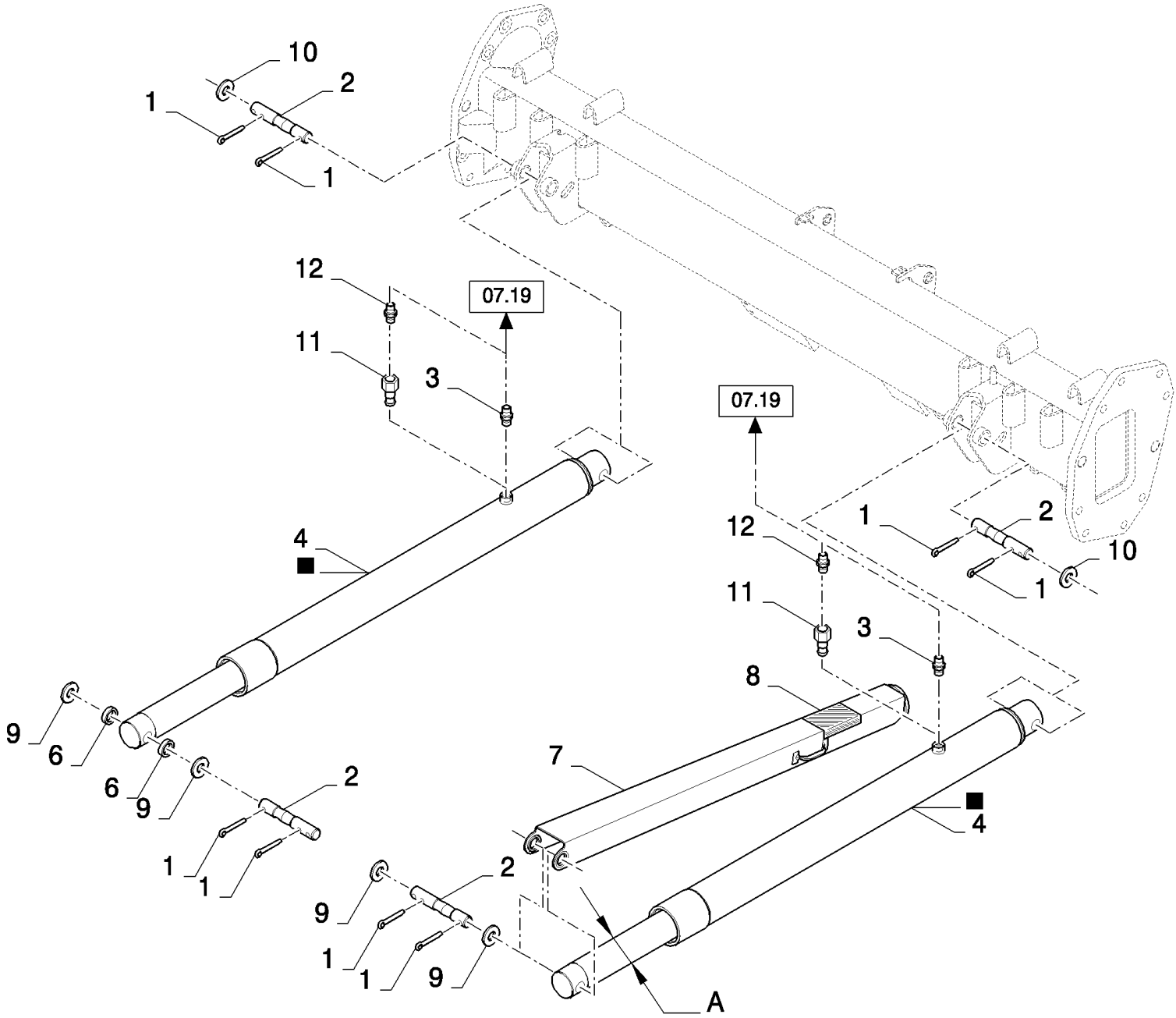

07.20(01) CYLINDERS, STRAW ELEVATOR

ссылка	Номер детали	Кол-во	Описание
1	300423	8	PIN, SPLIT (COTTER), M6.3 x 50, , FOR A=70MM ONLY, FOR A=63MM ONLY
1	333960	8	PIN, LOCK, M6 x 50, Slotted, , FOR A=75MM ONLY
2	84071297	4	PIN, , FOR A=70MM ONLY, FOR A=63MM ONLY, BSN C351
2	84449061	2	PIN, , FOR A=63MM ONLY, FOR A=70MM ONLY, ASN D352
2	84441972	4	PIN, , FOR A=75MM ONLY
3	86579676	2	CONNECTOR, HYD., 13/16"-16 ORFS x M18 x 1.5 ORB, , SEE FIGURE 07.502
4	84071965	2	HYDRAULIC CYLINDER, (5), FOR A=63MM ONLY, BSN C351
4	87031090	2	HYDRAULIC CYLINDER, (5), FOR A=63MM ONLY, ASN D352
4	84071952	2	HYDRAULIC CYLINDER, (5), FOR A=70MM ONLY, BSN C351
4	87031093	2	HYDRAULIC CYLINDER, (5), FOR A=70MM ONLY, ASN D352
4	84444607	2	HYDRAULIC CYLINDER, (5), FOR A=75MM ONLY, ASN D352
5	84334156	2	KIT, SEALS, , FOR A=63MM ONLY, BSN C351
5	84334155	2	KIT, SEALS, , FOR A=70MM ONLY, BSN C351
5	87031094	2	SEAL ASSY., , FOR A=70MM ONLY, ASN D352
5	87031091	2	SEAL ASSY., , FOR A=63MM ONLY, ASN D352
5	84447340	2	KIT, SEALS, , FOR A=75MM ONLY
6	84073733	2	BUSHING, , FOR A=75MM ONLY, FOR A=63MM ONLY
6	84071307	2	BUSHING, , FOR A=70MM ONLY
7	84073728	1	SUPPORT, , FOR A=63MM ONLY, BSN C237
7	84441166	1	SUPPORT, , FOR A=63MM ONLY, ASN D238
7	84071332	1	SUPPORT, , FOR A=70MM ONLY, BSN C237
7	84441167	1	SUPPORT, , FOR A=70MM ONLY, ASN D238
7	84443688	1	SUPPORT, , FOR A=70MM ONLY, FOR ITALY ONLY
7	84443687	1	SUPPORT, , FOR ITALY ONLY, FOR A=63MM ONLY
7	84444605	1	SUPPORT, , FOR A=75MM ONLY
8	401502	AR	STRIP, ANTI-SKID, 51mm x 18.3 Roll - Cut to Size
9	441176	8	WASHER,
10	84434032	8	WASHER,
11	84442647		VALVE, SAFETY, , FOR ITALY ONLY
12	86579678		CONNECTOR, HYD., 13/16"-16 ORFS x M22 x 1.5 ORB, , FOR ITALY ONLY

07.21(01) MAIN STACK VALVE

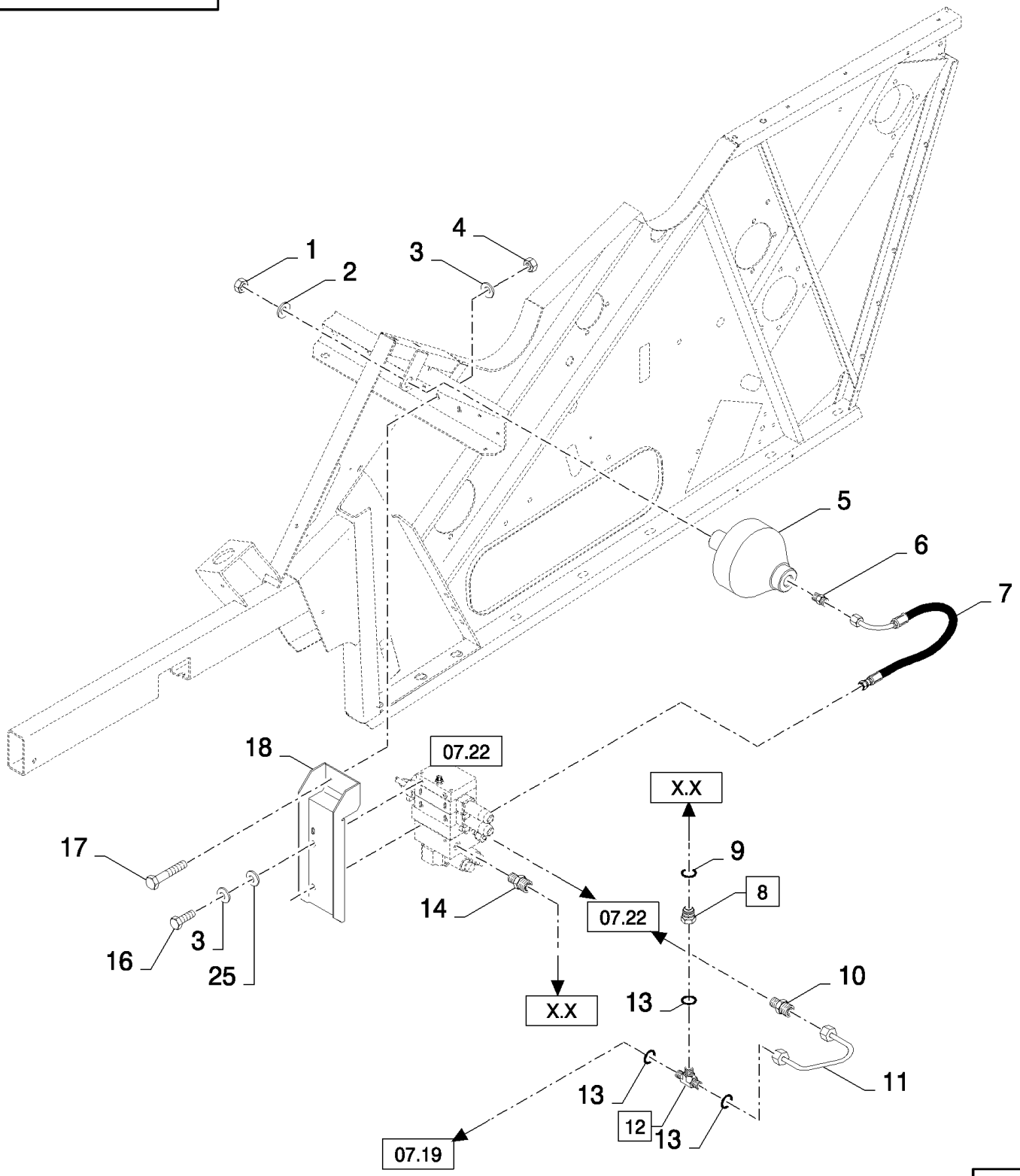

CX880 COMBINE - BASE UNIT (2/01-)

07.21(01) MAIN STACK VALVE

ссылка	Номер детали	Кол-во	Описание
1	308823	1	NUT, M28 x 1.5, Cl 8,
2	140110	1	WASHER,
3	322358	6	WASHER, SPRING, Belleville, M8,
4	89706690	2	NUT, M8, Cl 8,
5	86562190	1	ACCUMULATOR, 70bar
6	86579676	1	CONNECTOR, HYD., 13/16"-16 ORFS x M18 x 1.5 ORB, , SEE FIGURE 07.502
7	84068062	1	HOSE, FLEXIBLE,
8	84989629	1	CONNECTOR, HYD., (9)
10	86579679	1	CONNECTOR, HYD., 1"-14 ORFS x M18 x 1.5 ORB, , SEE FIGURE 07.502, BSN C237
10	86638108	1	CONNECTOR, HYD., , ASN D238
11	84989406	1	TUBE, HYD,
12	84989665	1	TEE, 1"-14 ORFS, (13)
13	9992069	3	O-RING, -016, 90 Duro, .614" ID x .070" Thk,
14	86593173	1	CONNECTOR, HYD., 9/16"-18 ORFS x M12 x 1.5 ORB,
15	378243	4	WASHER, M8,
17	120104	2	SCREW, Hex, M8 x 20, 8.8,
18	84069827	1	SUPPORT,
9	9992298	1	O-RING, -014, 90 Duro, .489" ID x .070" Thk,
16	16043224	4	BOLT, Hex, M8 x 16, 8.8, Full Thd,

07.22(01) MAIN STACK VALVE

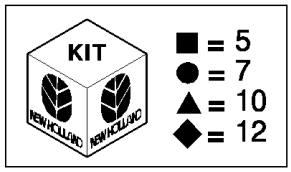

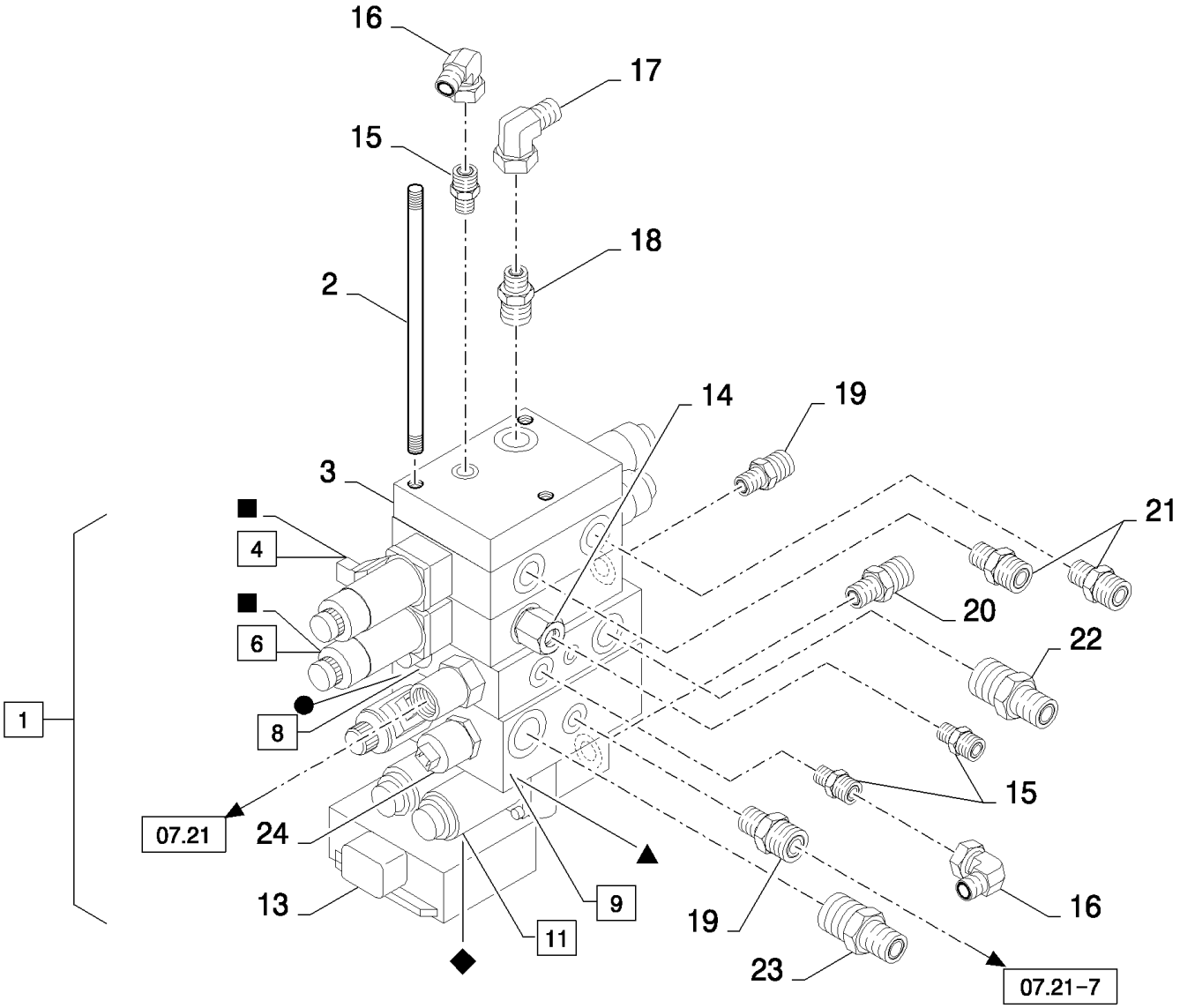

CX880 COMBINE - BASE UNIT (2/01-)

07.22(01) MAIN STACK VALVE

ссылка	Номер детали	Кол-во	Описание
1	84075566	1	VALVE, HYDRAULIC, (2to14,24)
2	86580339	3	ROD, THREADED,
3	86580338	1	VALVE, HYDRAULIC,
4	86580337	1	VALVE, HYDRAULIC, (5) UNLOADING TUBE
5	84014433	2	KIT, SEALS, , INCLUDES ALSO SEALS BETWEEN VALVES
6	86580336	1	VALVE, HYDRAULIC, (5) VARIATOR
7	84435943	1	KIT, SEALS,
8	86580335	1	VALVE, HYDRAULIC, (7)
9	86580334	1	VALVE, HYDRAULIC, (10)
10	84435942	1	KIT, SEALS,
11	84818137	1	VALVE, HYDRAULIC, (12), BSN C237
11	86580333	1	VALVE, HYDRAULIC, (12), ASN D238
12	84435941	1	KIT, SEALS,
13	84057737	1	ELECTRONIC UNIT, CONTROL,
14	84431928	1	VALVE, HYDRAULIC,
15	86580177	3	CONNECTOR, HYD., 11/16"-16 ORFS x M12 x 1.5 ORB, , SEE FIGURE 07.502
16	84989392	2	ELBOW, 90є, 11/16"-16 ORFS x 11/16"-16 Fem Sw, , SEE FIGURE 07.502
17	84989393	1	ELBOW, 90є, 1"-14 ORFS x 1"-14 Fem Sw, , SEE FIGURE 07.502
18	86579679	2	CONNECTOR, HYD., 1"-14 ORFS x M18 x 1.5 ORB, , SEE FIGURE 07.502
19	86579676	2	CONNECTOR, HYD., 13/16"-16 ORFS x M18 x 1.5 ORB, , SEE FIGURE 07.502
20	86579680	1	CONNECTOR, HYD., 1"-14 ORFS x M22 x 1.5 ORB, , SEE FIGURE 07.502
21	86579673	2	CONNECTOR, HYD., 11/16"-16 ORFS x M18 x 1.5 ORB, , SEE FIGURE 07.502
22	86579681	1	CONNECTOR, HYD., 1 3/16"-12 ORFS x M22 x 1.5 ORB, , SEE FIGURE 07.502
23	86579682	1	CONNECTOR, HYD., 1 3/16"-12 ORFS x M27 x 2 ORB, , SEE FIGURE 07.502
24	84440738	1	SENSOR,

07.23(01) RETURN FILTERS

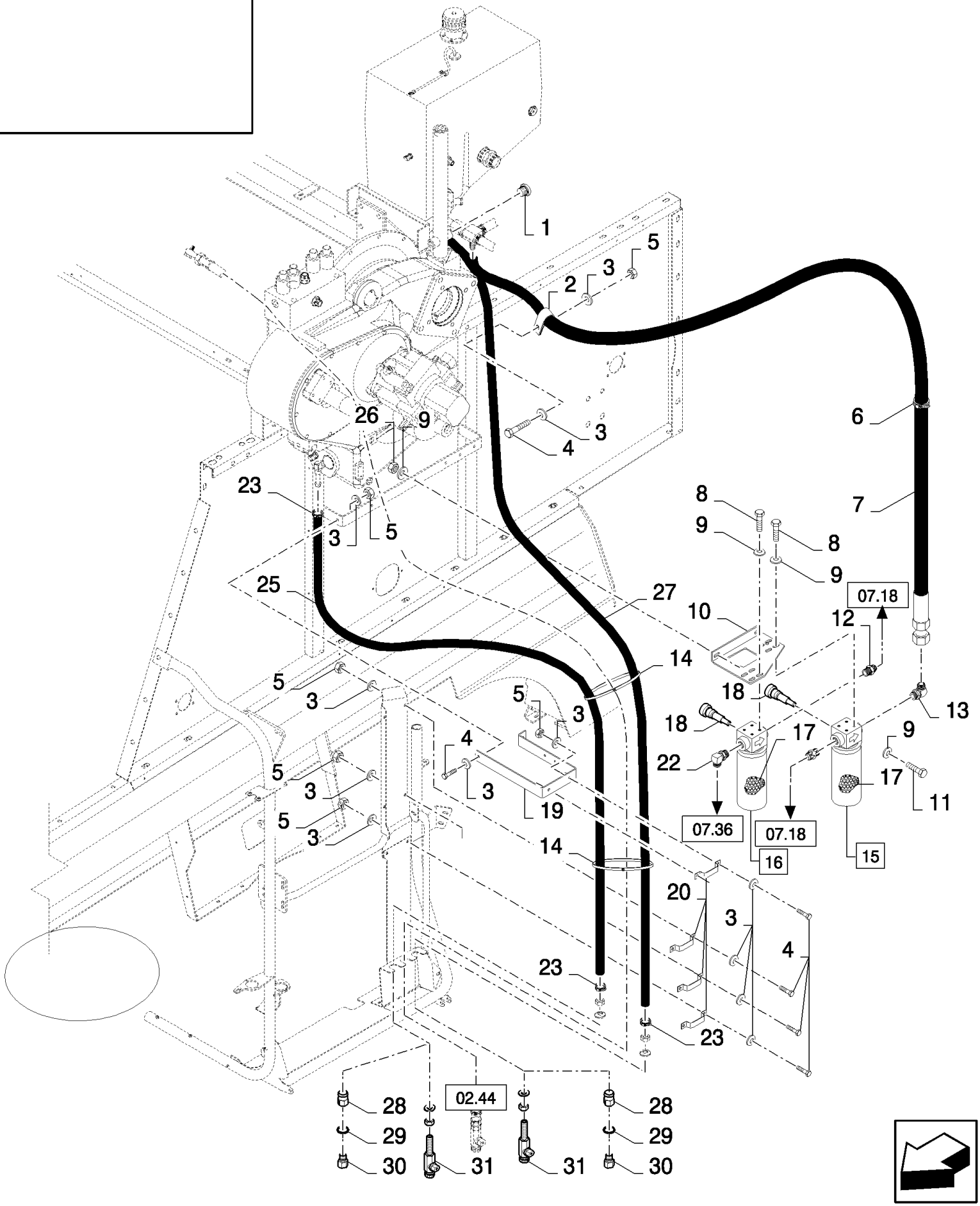

CX880 COMBINE - BASE UNIT (2/01-)

07.23(01) RETURN FILTERS

ссылка	Номер детали	Кол-во	Описание
1	86598043	1	PLUG, Hex Soc, M12 x 1.5, ORB, , SEE FIGURE 07.502
2	418407	1	CLAMP,
3	322358	22	WASHER, SPRING, Belleville, M8,
4	120104	11	SCREW, Hex, M8 x 20, 8.8,
5	89706690	11	NUT, M8, Cl 8,
6	458683	1	CLAMP,
7	84437867	1	HOSE, FLEXIBLE,
8	43138	8	SCREW, Hex, M10 x 20, 8.8, Full Thd,
9	140045	12	WASHER, SPRING, Belleville, M10,
10	84989082	1	SUPPORT,
11	43139	2	SCREW, Hex, M10 x 25, 8.8, Full Thd, M10x25
12	86597760	1	CONNECTOR, HYD., 1"-14 ORFS x M27 x 2 ORB, , SEE FIGURE 07.502
13	86579698	1	CONNECTOR, HYD., , SEE FIGURE 07.502
14	86566990	2	STRAP, CABLE,
15	86583919	1	FILTER ASSY, (17, 18)
16	86583920	1	FILTER ASSY, (17, 18)
17	9821387	1	FILTER, HYDRAULIC OIL, Charge Pump, FOR NA ONLY
17	9821387	1	FILTER, HYDRAULIC OIL, Charge Pump
18	86571115	1	SWITCH, PRESSURE,
19	84431989	1	SUPPORT,
20	84433487	4	CLAMP,
21	86579683	1	CONNECTOR, HYD., 1 3/16"-12 ORFS x M33 x 2 ORB, , SEE FIGURE 07.502
22	84100209	1	CONNECTOR, HYD., , SEE FIGURE 07.502
23	326082	4	CLAMP,
24	86583739	2	DRAINCOCK/TAP, SUPPLY,
25	86596208	1	HOSE, , BSN C257
25	84440923	1	HOSE, , ASN D258
26	100016	2	NUT, M10, Cl 8,
27	86583918	1	HOSE, , BSN C257
27	84440924	1	HOSE, , ASN D258
28	80326079	2	CONNECTOR, HYD., , ASN D258
29	9511034	2	GASKET, , ASN D258
30	150060	2	PLUG, , ASN D258
31	86583739	2	DRAINCOCK/TAP, SUPPLY, , BSN C257

07.24(01) LOWER FRAME HYDRAULICS - SELF-LEVELLING

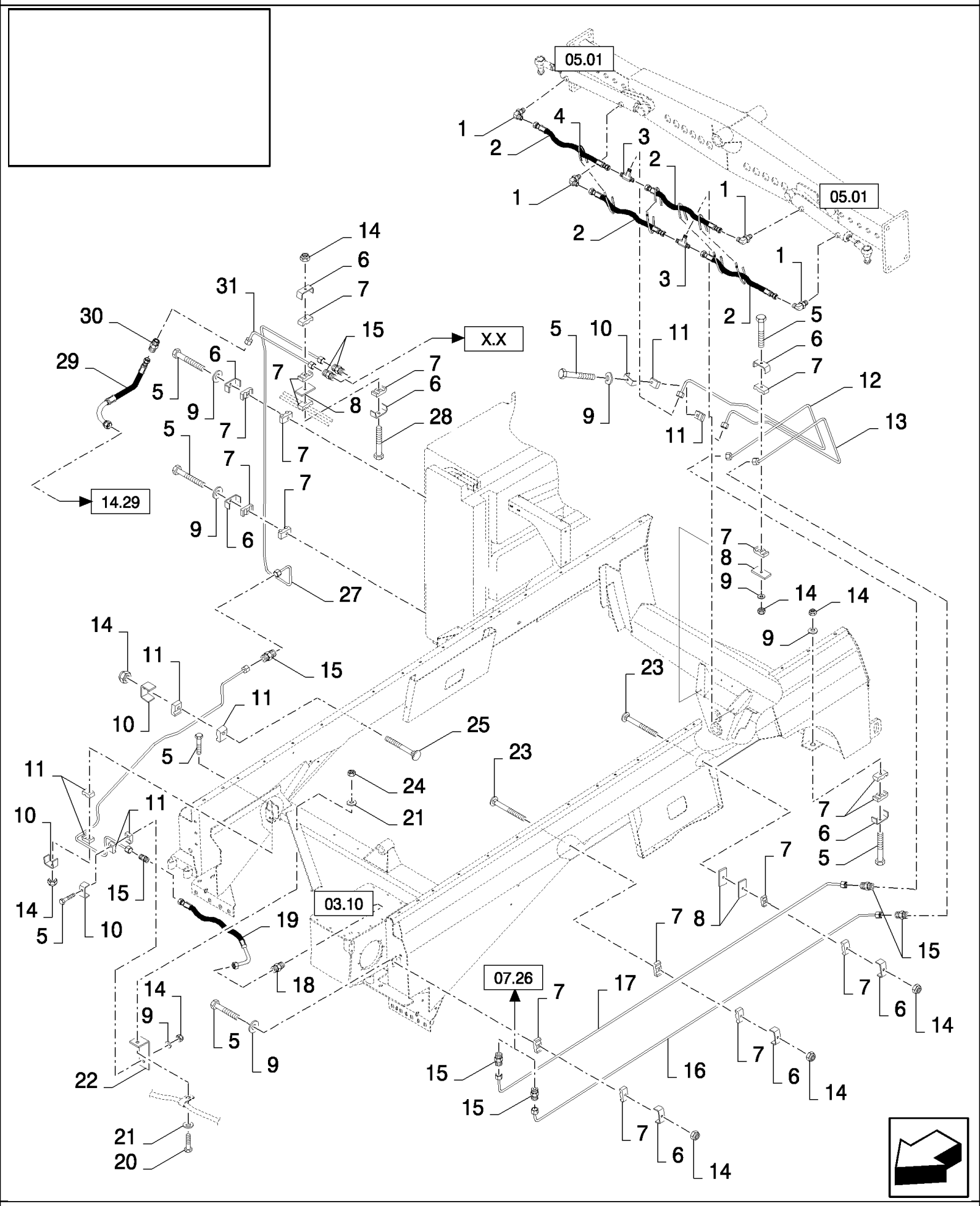

CX880 COMBINE - BASE UNIT (2/01-)

07.24(01) LOWER FRAME HYDRAULICS - SELF-LEVELLING

ссылка	Номер детали	Кол-во	Описание
1	86579691	4	ELBOW, 90є, 13/16"-18 ORFS x M18 x 1.5 ORB, , SEE FIGURE 07.502
2	84068103	4	HOSE, FLEXIBLE,
3	86533127	2	TEE, 13/16"-16 ORFS,
4	86566990	4	STRAP, CABLE,
5	120056	9	SCREW, Hex, M6 x 50, 8.8,
6	431941	9	SUPPORT,
7	430357	18	CLAMP,
8	434097	4	BRACKET,
9	322357	8	WASHER, SPRING, Belleville, M6,
10	442340	5	SUPPORT,
11	433008	10	CLAMP,
12	84432597	1	TUBE, HYD, , FOR CX720, CX740, CX760, CX780 ONLY
12	84432251	1	TUBE, HYD, , FOR CX820, CX840, CX860, CX880 ONLY
13	84432595	1	TUBE, HYD, , FOR CX720, CX740, CX760, CX780 ONLY
13	84432253	1	TUBE, HYD, , FOR CX820, CX840, CX860, CX880 ONLY
14	412152	9	NUT, LOCK, M6 x 1, Cl 8.8,
15	84431547	8	UNION, 13/16"-16 ORFS, , SEE FIGURE 07.502
16	84431499	1	TUBE, HYD,
17	84431495	1	TUBE, HYD,
18	86579674	1	CONNECTOR, HYD., 13/16"-16 ORFS x M14 x 1.5 ORB, , SEE FIGURE 07.502
19	84068062	1	HOSE, FLEXIBLE,
20	120104	1	SCREW, Hex, M8 x 20, 8.8,
21	322358	2	WASHER, SPRING, Belleville, M8,
22	86586810	1	SUPPORT,
23	412364	2	BOLT, CARRIAGE, Short NK, M6 x 50, Cl8.8, Full Thd, M6x50
24	89706690	1	NUT, M8, Cl 8,
25	412327	1	BOLT, CARRIAGE, Short NK, M6 x 40, Cl8.8,
26	84433230	1	TUBE, HYD,
27	84437140	1	TUBE, HYD, , FOR CX720, CX740, CX760, CX780 ONLY
27	84433232	1	TUBE, HYD, , FOR CX820, CX840, CX860, CX880 ONLY
28	86508569	1	BOLT, Hex, M6 x 70, 8.8, M6x70
29	84068158	1	HOSE, FLEXIBLE,
30	84431472	1	CONNECTOR, HYD., , SEE FIGURE 07.502
31	84431249	1	TUBE, HYD, , FOR CX720, CX740, CX760, CX780 ONLY
31	84431245	1	TUBE, HYD, , FOR CX820, CX840, CX860, CX880 ONLY

07.25(01) LOWER FRAME HYDRAULICS, FIXED SHOE

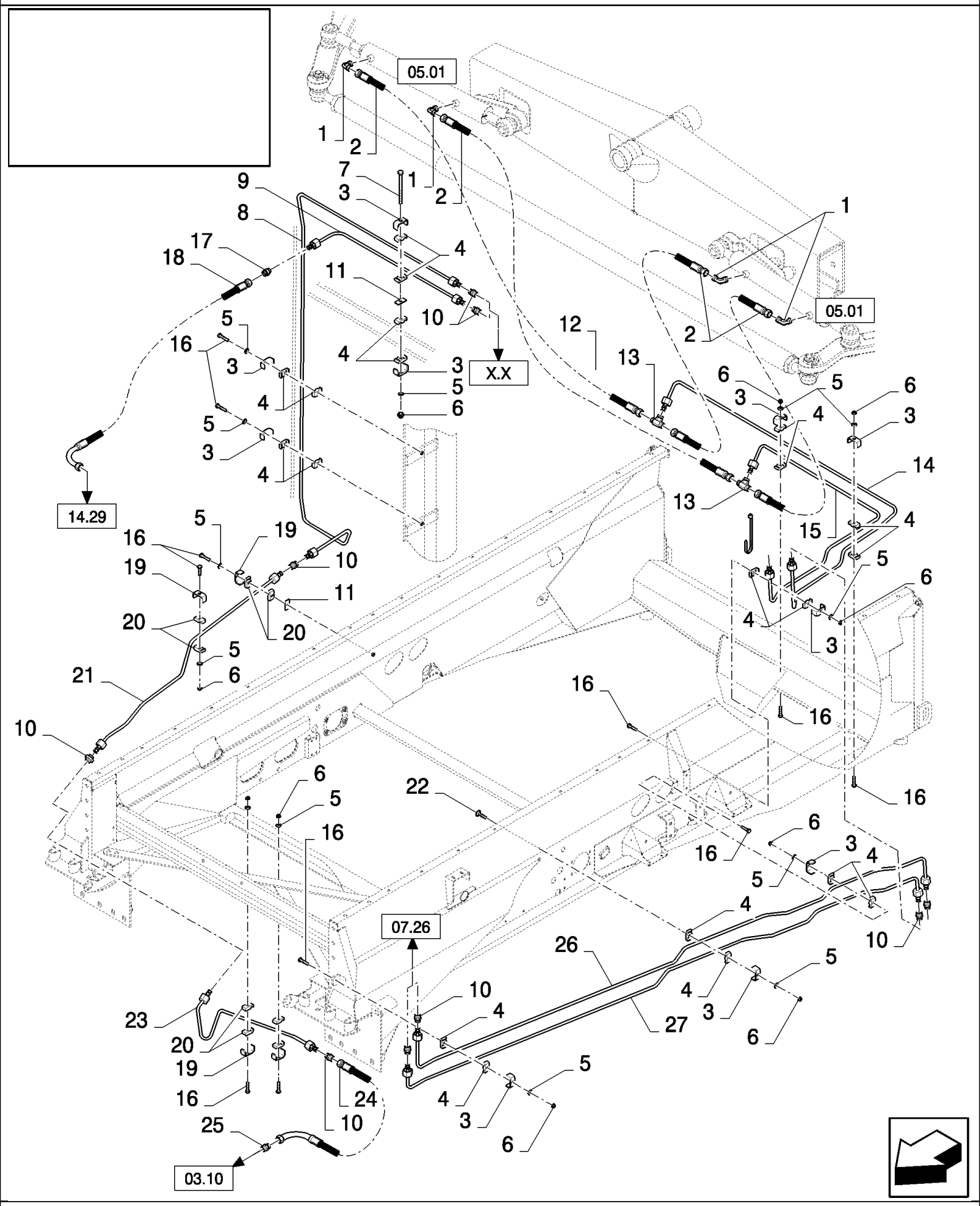

CX880 COMBINE - BASE UNIT (2/01-)

07.25(01) LOWER FRAME HYDRAULICS, FIXED SHOE

ссылка	Номер детали	Кол-во	Описание
1	86579691	4	ELBOW, 90є, 13/16"-18 ORFS x M18 x 1.5 ORB,
2	84068103	4	HOSE, FLEXIBLE,
3	431941	10	SUPPORT,
4	430357	20	CLAMP,
5	430357	AR	CLAMP, 6MM
6	412152	AR	NUT, LOCK, M6 x 1, Cl 8.8,
7	86508569	1	BOLT, Hex, M6 x 70, 8.8, M6x70
8	84437143	1	TUBE, HYD, , FOR CX820, CX840, CX860, CX880 ONLY
8	84432255	1	TUBE, HYD, , FOR CX720, CX740, CX760, CX780 ONLY
9	84431245	1	TUBE, HYD, , FOR CX820, CX840, CX860, CX880 ONLY
9	84431249	1	TUBE, HYD, , FOR CX720, CX740, CX760, CX780 ONLY
10	84431547	9	UNION, 13/16"-16 ORFS, , SEE FIGURE 07.502
11	434097	2	BRACKET,
12	396718	6	STRAP,
13	86533127	2	TEE, 13/16"-16 ORFS,
14	84989298	1	TUBE, HYD, , FOR CX820, CX840, CX860, CX880 ONLY
14	84432513	1	TUBE, HYD, , FOR CX720, CX740, CX760, CX780 ONLY
15	84989294	1	TUBE, HYD, , FOR CX820, CX840, CX860, CX880 ONLY
15	84432517	1	TUBE, HYD, , FOR CX720, CX740, CX760, CX780 ONLY
16	120056	AR	SCREW, Hex, M6 x 50, 8.8,
17	84431472	1	CONNECTOR, HYD., , SEE FIGURE 07.502
18	84068158	1	HOSE, FLEXIBLE,
19	442340	AR	SUPPORT,
20	433008	AR	CLAMP,
21	84431508	1	TUBE, HYD,
22	412364	1	BOLT, CARRIAGE, Short NK, M6 x 50, Cl8.8, Full Thd, M6x50
23	84431505	1	TUBE, HYD, , FOR CX820, CX840, CX860, CX880 ONLY
23	84432519	1	TUBE, HYD, , FOR CX720, CX740, CX760, CX780 ONLY
24	84068062	1	HOSE, FLEXIBLE,
25	86579674	1	CONNECTOR, HYD., 13/16"-16 ORFS x M14 x 1.5 ORB, , SEE FIGURE 07.502
26	84989290	1	TUBE, HYD,
27	84989276	1	TUBE, HYD,

07.26(01) HYDRAULIC LINES FOR STEERING VALVE

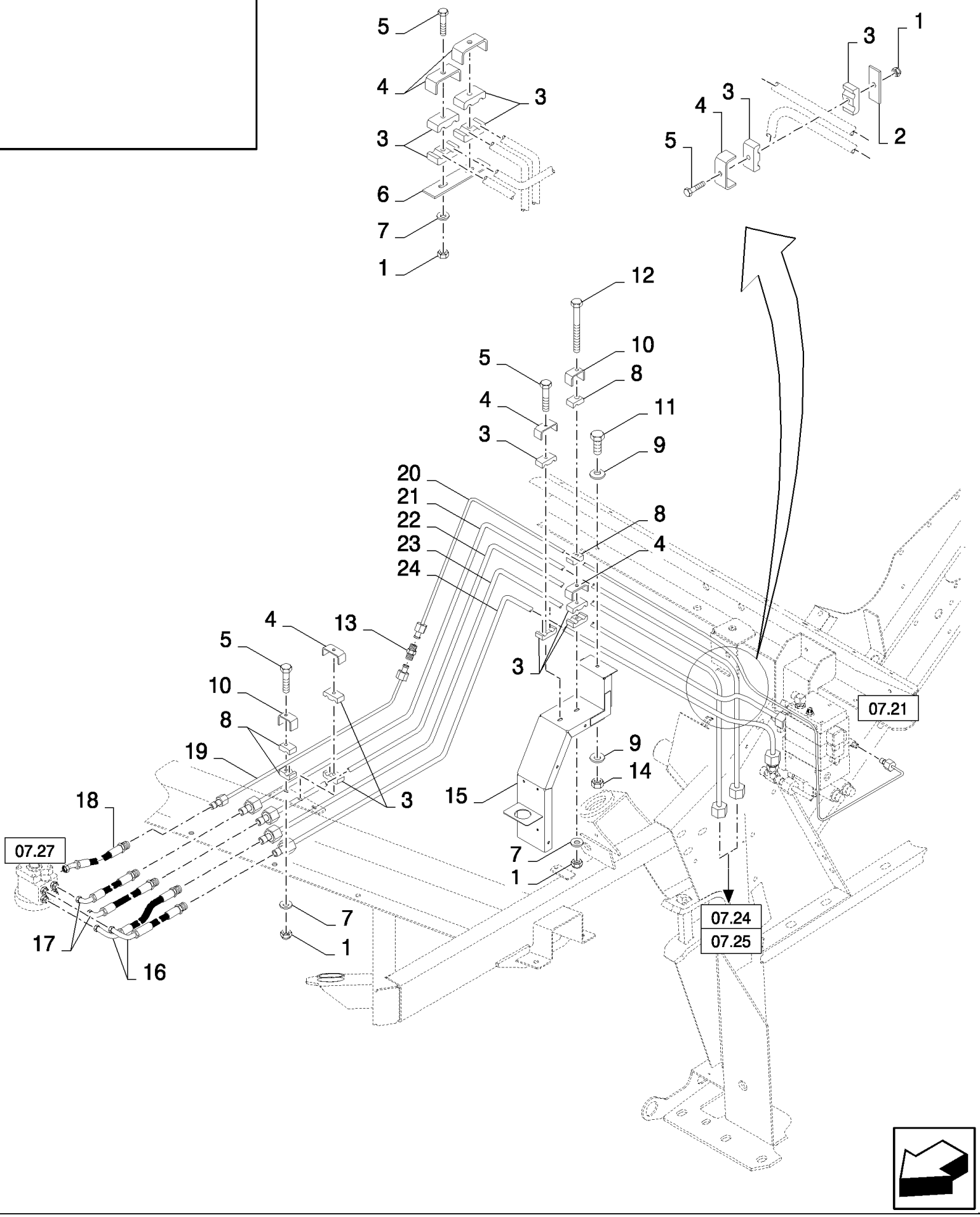

CX880 COMBINE - BASE UNIT (2/01-)

07.26(01) HYDRAULIC LINES FOR STEERING VALVE

ссылка	Номер детали	Кол-во	Описание
1	353308	8	NUT, M6 x 1, Cl 8,
2	434097	1	BRACKET,
3	430357	14	CLAMP,
4	431941	7	SUPPORT,
5	120056	7	SCREW, Hex, M6 x 50, 8.8,
6	86623755	1	PLATE,
7	322357	7	WASHER, SPRING, Belleville, M6,
8	433008	4	CLAMP,
9	322358	2	WASHER, SPRING, Belleville, M8,
10	433101	2	SUPPORT,
12	86508570	1	SCREW, Hex, M6 x 80, 8.8,
13	84431546	1	UNION, 11/16"-16 ORFS, , SEE FIGURE 07.502
14	89706690	1	NUT, M8, Cl 8,
15	84435785	1	SUPPORT,
16	84068101	2	HOSE, FLEXIBLE,
17	84068100	2	HOSE, FLEXIBLE,
18	84068102	1	HOSE, FLEXIBLE,
19	84989639	1	TUBE, HYD,
20	84989587	1	TUBE, HYD, , FOR CX720, CX740, CX760, CX780 ONLY
20	84989571	1	TUBE, HYD, , FOR CX820, CX840, CX860, CX880 ONLY
21	84989760	1	TUBE, HYD, , FOR CX720, CX740, CX760, CX780 ONLY
21	84989317	1	TUBE, HYD, , FOR CX820, CX840, CX860, CX880 ONLY
22	84989790	1	TUBE, HYD, , FOR CX720, CX740, CX760, CX780 ONLY
22	84989321	1	TUBE, HYD, , FOR CX820, CX840, CX860, CX880 ONLY
23	84989604	1	TUBE, HYD, , FOR CX720, CX740, CX760, CX780 ONLY
23	84989306	1	TUBE, HYD, , FOR CX820, CX840, CX860, CX880 ONLY
24	84432527	1	TUBE, HYD, , FOR CX720, CX740, CX760, CX780 ONLY
24	84989296	1	TUBE, HYD, , FOR CX820, CX840, CX860, CX880 ONLY
11	16043224	1	BOLT, Hex, M8 x 16, 8.8, Full Thd,

07.27(01) STEERING VALVE

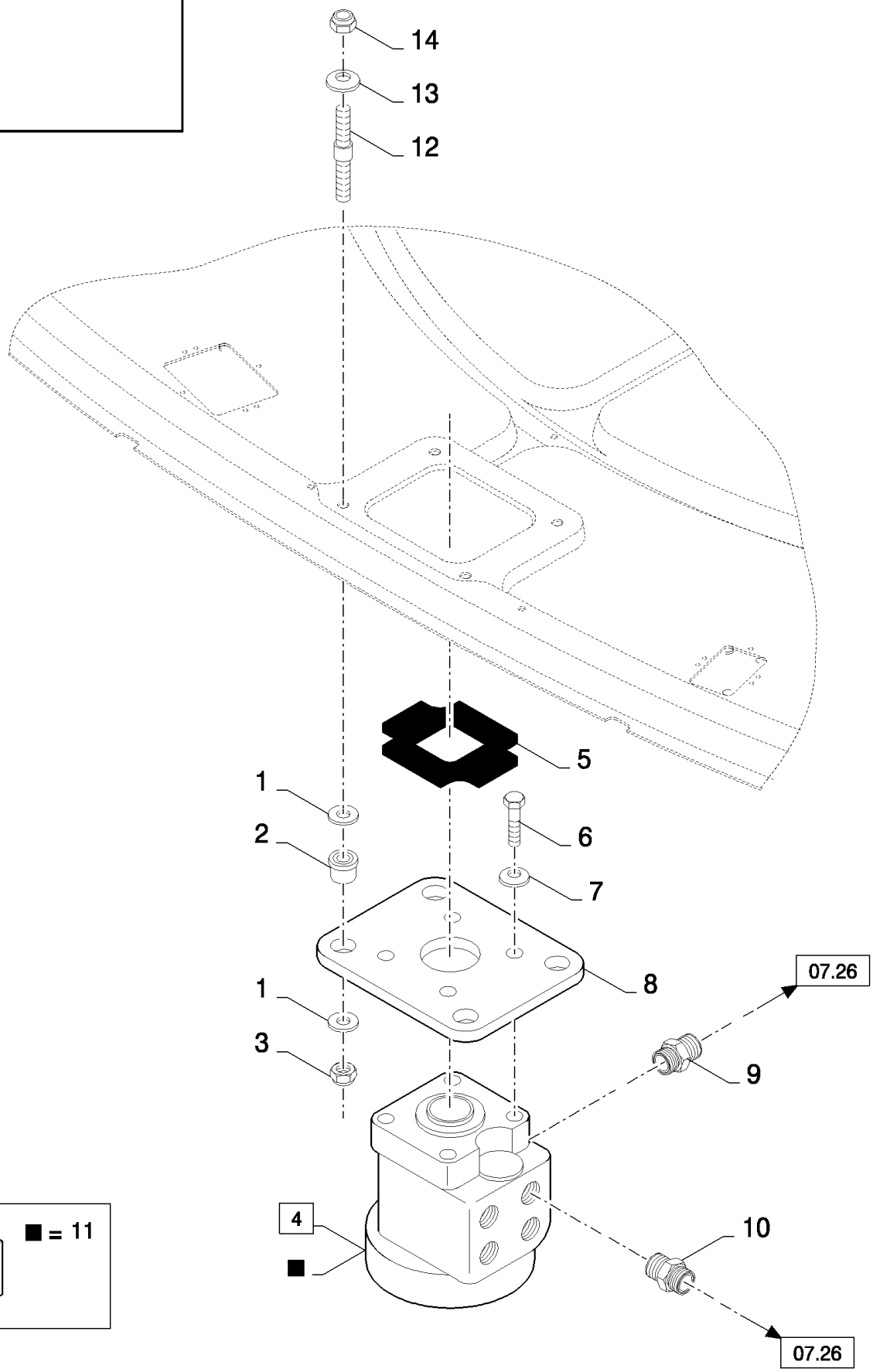

KIT

■ = 11

07.27(01) STEERING VALVE

ссылка	Номер детали	Кол-во	Описание
1	86012639	8	WASHER,
2	601062	4	ISOLATOR,
3	86629542	4	NUT, LOCK, M8 x 1.25, Cl 8,
4	86565262	1	VALVE, HYDRAULIC, 330CC (11)
4	86565263	1	VALVE, HYDRAULIC, 360CC (11), FOR CX840, CX860, CX880 ONLY, FOR NA ONLY
4	86560757	1	VALVE, HYDRAULIC, 250CC
5	86974950	1	SEAL,
6	43138	4	SCREW, Hex, M10 x 20, 8.8, Full Thd,
7	140045	4	WASHER, SPRING, Belleville, M10,
8	84075217	1	PLATE,
9	86593173	1	CONNECTOR, HYD., 9/16"-18 ORFS x M12 x 1.5 ORB, (10,11)
10	86579676	4	CONNECTOR, HYD., 13/16"-16 ORFS x M18 x 1.5 ORB, (13,14), SEE FIGURE 07.502
11	84434730	1	KIT, SEALS,
12	84432508	4	STUD,
13	322358	4	WASHER, SPRING, Belleville, M8,
14	89706690	4	NUT, M8, Cl 8,

07.28(01) STRAW ELEVATOR, HYDRAULICS

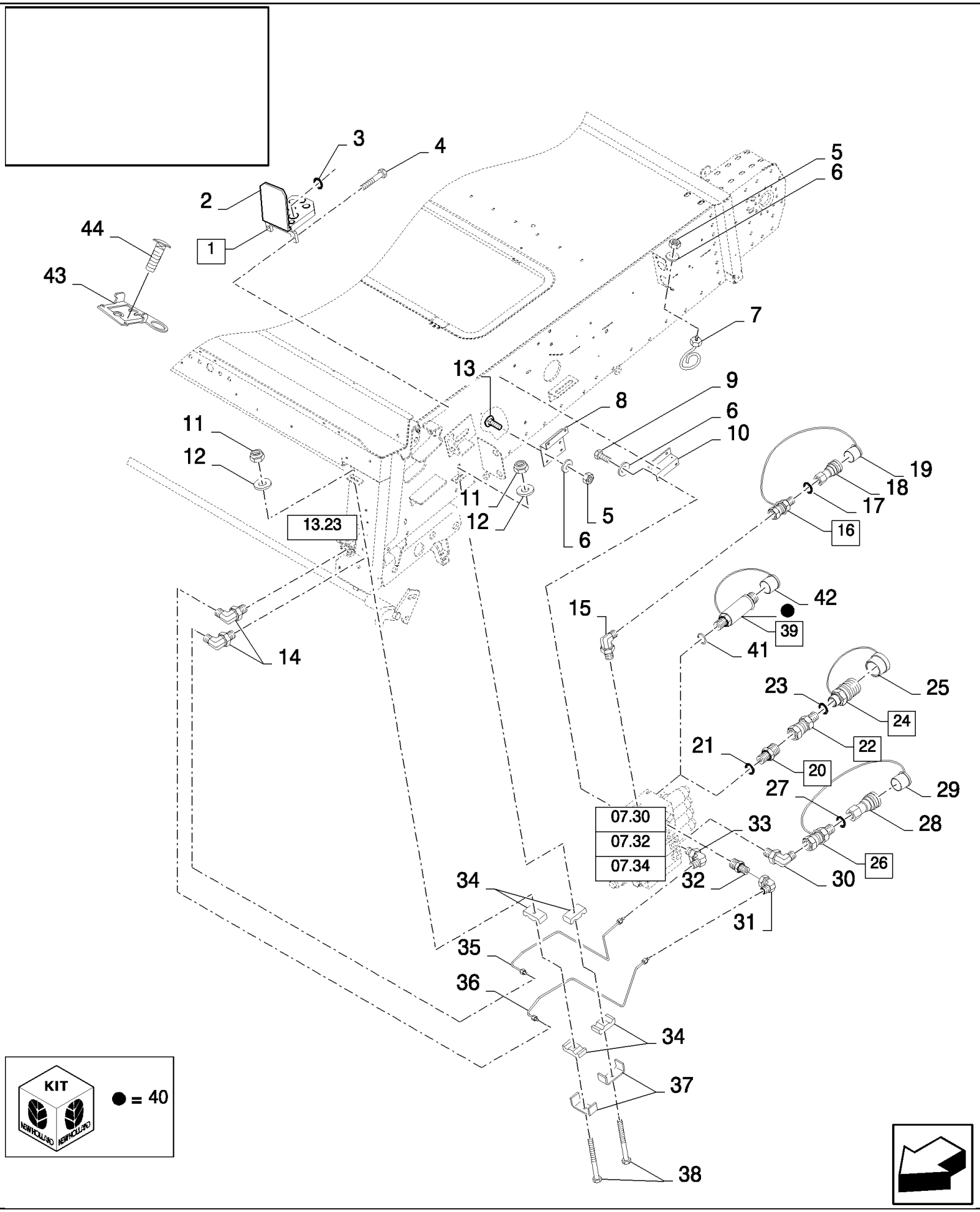

07.28(01) STRAW ELEVATOR, HYDRAULICS

ссылка	Номер детали	Кол-во	Описание
1	84435012	1	COUPLING, QUICK, MALE, (2, 3), BSN C245
1	84439856	1	COUPLING, QUICK, MALE, (2), BSN F246415
2	84435044	1	COVER,
3	84435045	1	SEAL, , BSN C245
4	86512138	2	SCREW, Hex Soc Hd, M8 x 20, 12.9, , BSN C245
4	84432127	2	SCREW, Hex Soc Hd, M6 x 25, 12.9, M8x20, BSN F246415
5	89706690	5	NUT, M8, Cl 8,
6	322358	9	WASHER, SPRING, Belleville, M8,
7	84062500	1	RETAINER,
8	84072527	1	SUPPORT,
9	16043224	4	BOLT, Hex, M8 x 16, 8.8, Full Thd,
10	84069983	1	SUPPORT,
11	353308	4	NUT, M6 x 1, Cl 8,
12	140015	4	WASHER, 6MM
13	86507486	4	BOLT, CARRIAGE, Short NK, M8 x 20, Cl8.8, Full Thd,
14	86579692	2	ELBOW, 90є, 13/16"-18 ORFS x M22 x 1.5 ORB, , SEE FIGURE 07.502
15	86580178	1	ELBOW, 90є, 11/16"-18 ORFS x M12 x 1.5 ORB, , SEE FIGURE 07.502
16	84062147	1	CONNECTOR, HYD., (17)
17	9617873	1	O-RING, 6-1, 90 Duro, .468" ID x .078" Thk,
18	86592081	1	COUPLING, QUICK, MALE,
19	86592085	1	DUST CAP,
20	84435014	1	CONNECTOR, HYD., (21), BSN C245
21	86598103	1	O-RING, Cl 6, 23.6MM ID x 2.9 Thk, , BSN C245
22	84435015	1	CONNECTOR, HYD., (23), BSN C245
23	86598102	1	O-RING, Cl 6, 19.3MM ID x 2.2 Thk, , BSN C245
24	86596888	1	COUPLING, QUICK, MALE, (25), BSN C245
25	84435225	1	DUST CAP, , BSN C245
26	84062146	1	CONNECTOR, HYD., (27)
27	167269	1	O-RING, 10-1, 90 Duro, .755" ID x .097" Thk,
28	86592079	1	COUPLING, QUICK, MALE,
29	86592083	1	DUST CAP,
30	86579694	1	ELBOW, 90є, 1"-14 ORFS x M22 x 1.5 ORB, , SEE FIGURE 07.502
31	84989383	1	ELBOW, 90є, 13/16"-16 ORFS x 13/16"-16 Fem Sw, , SEE FIGURE 07.502
32	86579676	1	CONNECTOR, HYD., 13/16"-16 ORFS x M18 x 1.5 ORB, , SEE FIGURE 07.502
33	86579691	1	ELBOW, 90є, 13/16"-18 ORFS x M18 x 1.5 ORB, , SEE FIGURE 07.502
34	430357	4	CLAMP,
35	84989451	1	TUBE, HYD,
36	84989453	1	TUBE, HYD,
37	431941	2	SUPPORT,
38	120056	2	SCREW, Hex, M6 x 50, 8.8,
39	86623545	1	COUPLING, QUICK, MALE, (40 to 42), ASN D246
40	84440284	1	O-RING, , ASN D246
41	86598103	1	O-RING, Cl 6, 23.6MM ID x 2.9 Thk, , ASN D246
42	84435225	1	DUST CAP, , ASN D246

ссылка	Номер детали	Кол-во	Описание
43	84455650	1	BRACKET, , ASN D416
44	86512439	2	SCREW, Short NK, M6 x 16, Cl8.8, Full Thd, , BSN F416481
44	89706703	2	BOLT, M6x20, ASN D482

07.31(01) STRAW ELEVATOR HYDRAULICS WITH LATERAL FLOTATION

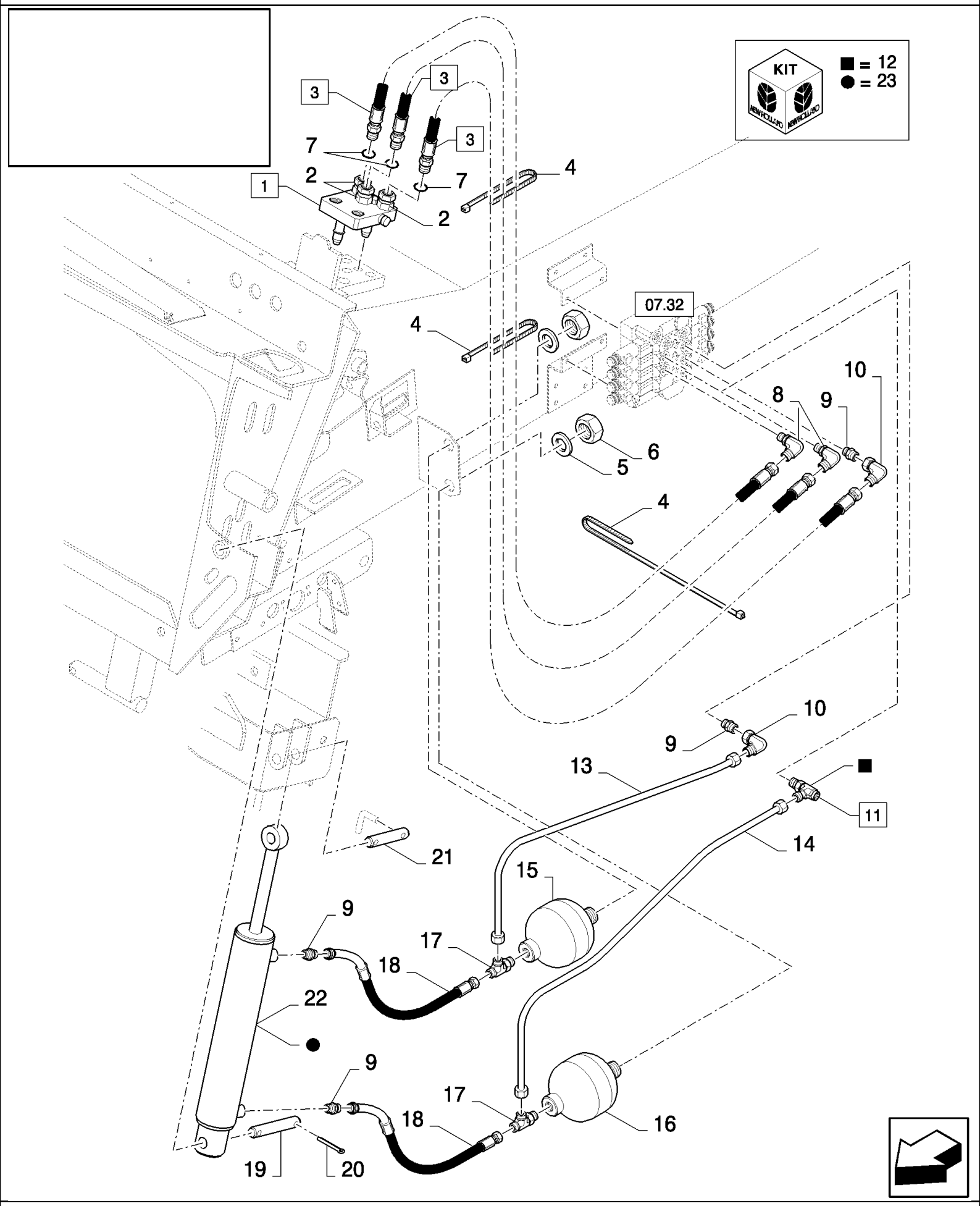

CX880 COMBINE - BASE UNIT (2/01-)

07.31(01) STRAW ELEVATOR HYDRAULICS WITH LATERAL FLOTATION

ссылка	Номер детали	Кол-во	Описание
1	84435011	1	COUPLING, QUICK, MALE, (2)
2	84435504	3	CONNECTOR, HYD.,
3	84068626	3	HOSE, FLEXIBLE, (7)
4	396718	3	STRAP,
5	140110	2	WASHER,
6	308823	2	NUT, M28 x 1.5, Cl 8,
7	9617873	3	O-RING, 6-1, 90 Duro, .468" ID x .078" Thk,
8	86579688	2	ELBOW, 90є, 11/16"-18 ORFS x M18 x 1.5 ORB, , SEE FIGURE 07.502
9	86579673	4	CONNECTOR, HYD., 11/16"-16 ORFS x M18 x 1.5 ORB, , SEE FIGURE 07.502
10	84989392	2	ELBOW, 90є, 11/16"-16 ORFS x 11/16"-16 Fem Sw, , SEE FIGURE 07.502
11	84062490	1	VALVE, PRESSURE RELIEF, (12)
12	84989501	1	KIT, SEALS,
13	84989480	1	TUBE, HYD, , BSN C487
13	84068625	1	HOSE, FLEXIBLE, , ASN D488
14	84989476	1	TUBE, HYD, , BSN C487
14	84068625	1	HOSE, FLEXIBLE, , ASN D488
15	84437249	1	ACCUMULATOR, 80 bar, BSN C305
15	84435797	1	ACCUMULATOR, , ASN D306
16	84437250	1	ACCUMULATOR, 100 bar, BSN C305
16	84435798	1	ACCUMULATOR, , ASN D306
17	86597759	2	TEE, 13/16"-16 ORFS x M18 x 1.5 ORB Run, , SEE FIGURE 07.502
18	84068625	2	HOSE, FLEXIBLE,
19	9593306	1	PIN,
20	412686	1	PIN, SPLIT (COTTER), M5 x 32,
21	89500923	1	PIN,
22	84071894	1	HYDRAULIC CYLINDER, (23)
23	84057475	1	KIT, SEALS, , SV ENGRAVED IN CYLINDER
23	86557266	1	KIT, SEALS,

07.32(01) STRAW ELEVATOR STACK VALVE WITH LATERAL FLOTATION

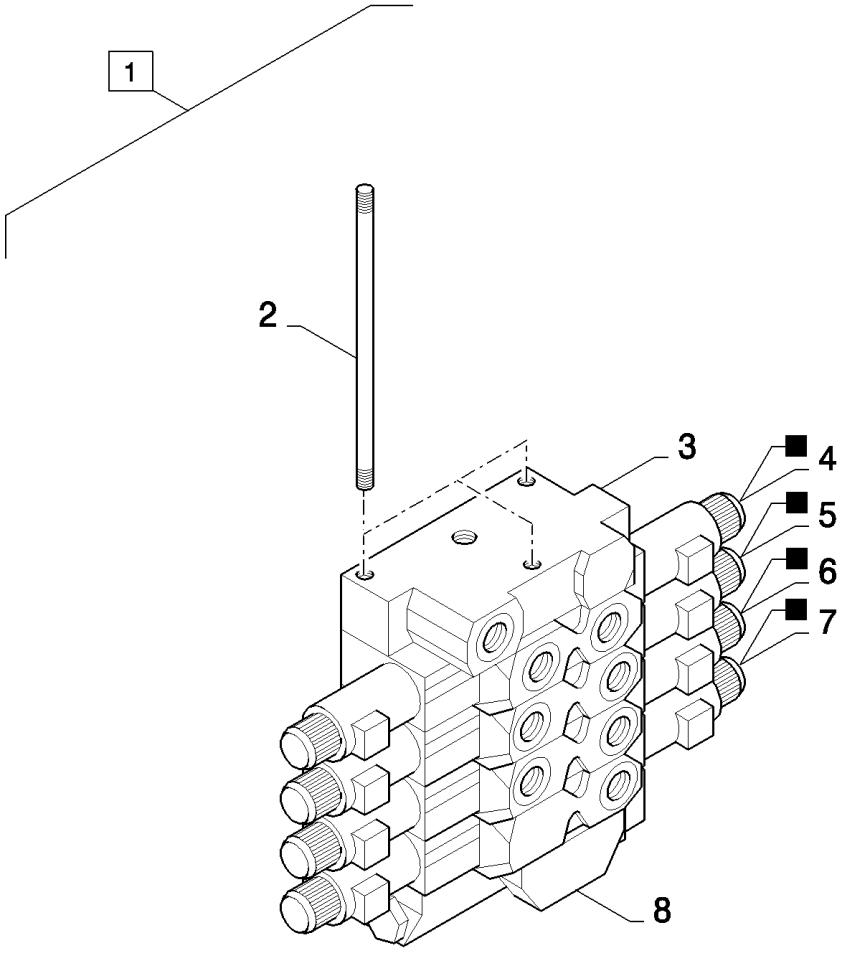

KIT

■ = 9

CX880 COMBINE - BASE UNIT (2/01-)

07.32(01) STRAW ELEVATOR STACK VALVE WITH LATERAL FLOTATION

ссылка	Номер детали	Кол-во	Описание
1	84073783	1	VALVE, HYDRAULIC, (2 to 8)
2	86596826	3	ROD, THREADED,
3	86580294	1	VALVE, HYDRAULIC,
4	86580295	1	VALVE, HYDRAULIC, REVERSER (9)
5	86580299	1	VALVE, HYDRAULIC, LF (9)
6	86580296	1	VALVE, HYDRAULIC, REEL H (9)
7	86580297	1	VALVE, HYDRAULIC, REEL V (9)
8	86580298	1	VALVE, HYDRAULIC,
9	84014433	4	KIT, SEALS,

07.32A(01) REBUILD KIT FOR HYDRAULIC REEL

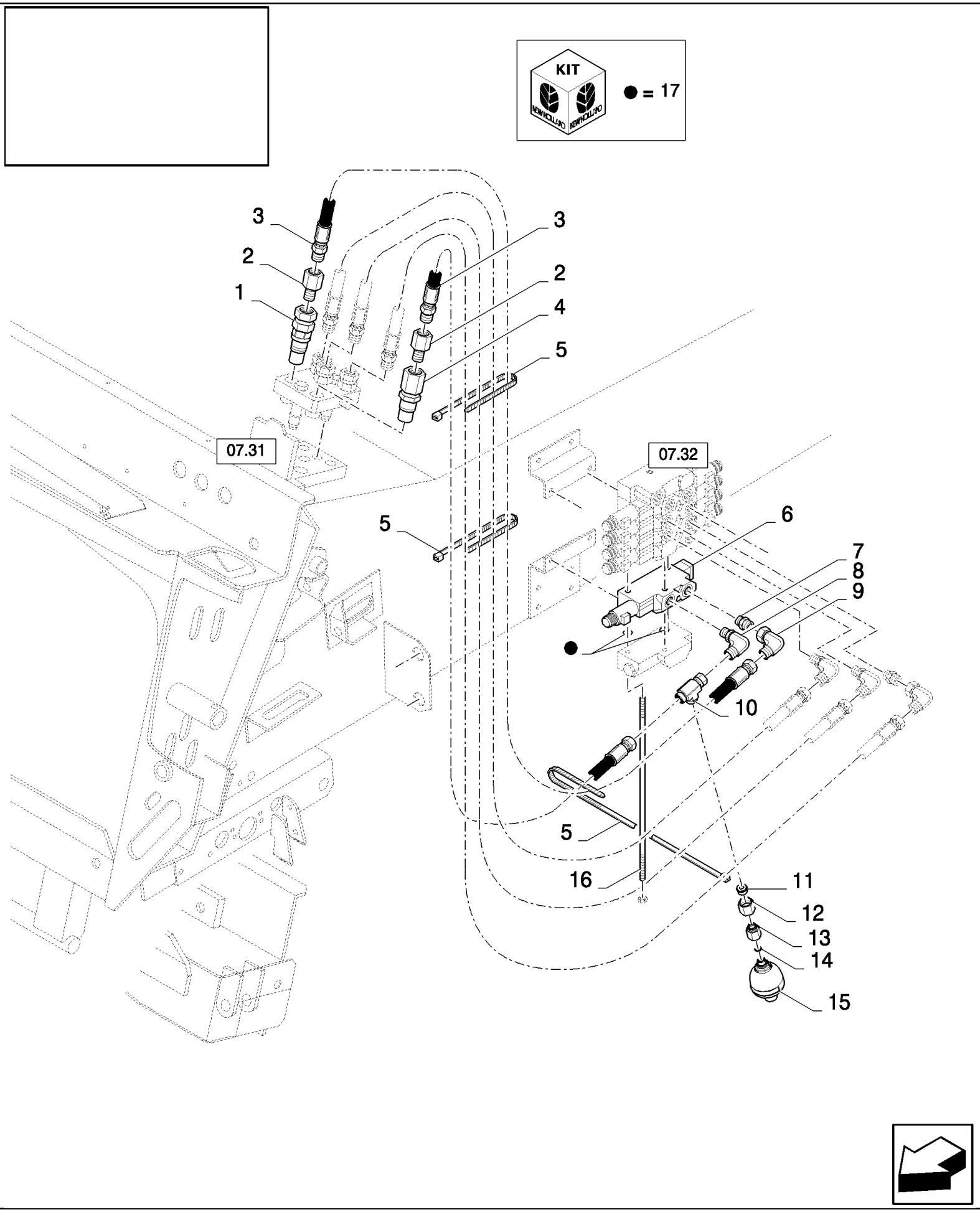

CX880 COMBINE - BASE UNIT (2/01-)

07.32A(01) REBUILD KIT FOR HYDRAULIC REEL

ссылка	Номер детали	Кол-во	Описание
1	84435503	1	CONNECTOR, HYD.,
2	84989481	2	ADAPTER,
3	84068627	2	HOSE, FLEXIBLE,
4	84435502	1	CONNECTOR, HYD.,
5	396718	3	STRAP,
6	86580300	1	VALVE SECTION, HYD,
7	86579679	1	CONNECTOR, HYD., 1"-14 ORFS x M18 x 1.5 ORB, , SEE FIGURE 07.502
8	86579693	1	ELBOW, 90є, 1"-14 ORFS x M18 x 1.5 ORB, , SEE FIGURE 07.502
9	84989393	1	ELBOW, 90є, 1"-14 ORFS x 1"-14 Fem Sw, , SEE FIGURE 07.502
10	84989850	1	CONNECTION, 3 WAY,
11	84442654	1	RING,
12	85802819	1	NUT, PIPE UNION,
13	84442628	1	CONNECTOR, HYD.,
14	84038227	1	GASKET,
15	84442621	1	ACCUMULATOR,
16	86580371	3	ROD, THREADED,
17	84014433	1	KIT, SEALS,

07.33(01) STRAW ELEVATOR HYDRAULICS WITH LATERAL FLOTATION AND HYDRAULIC REEL DRIVE

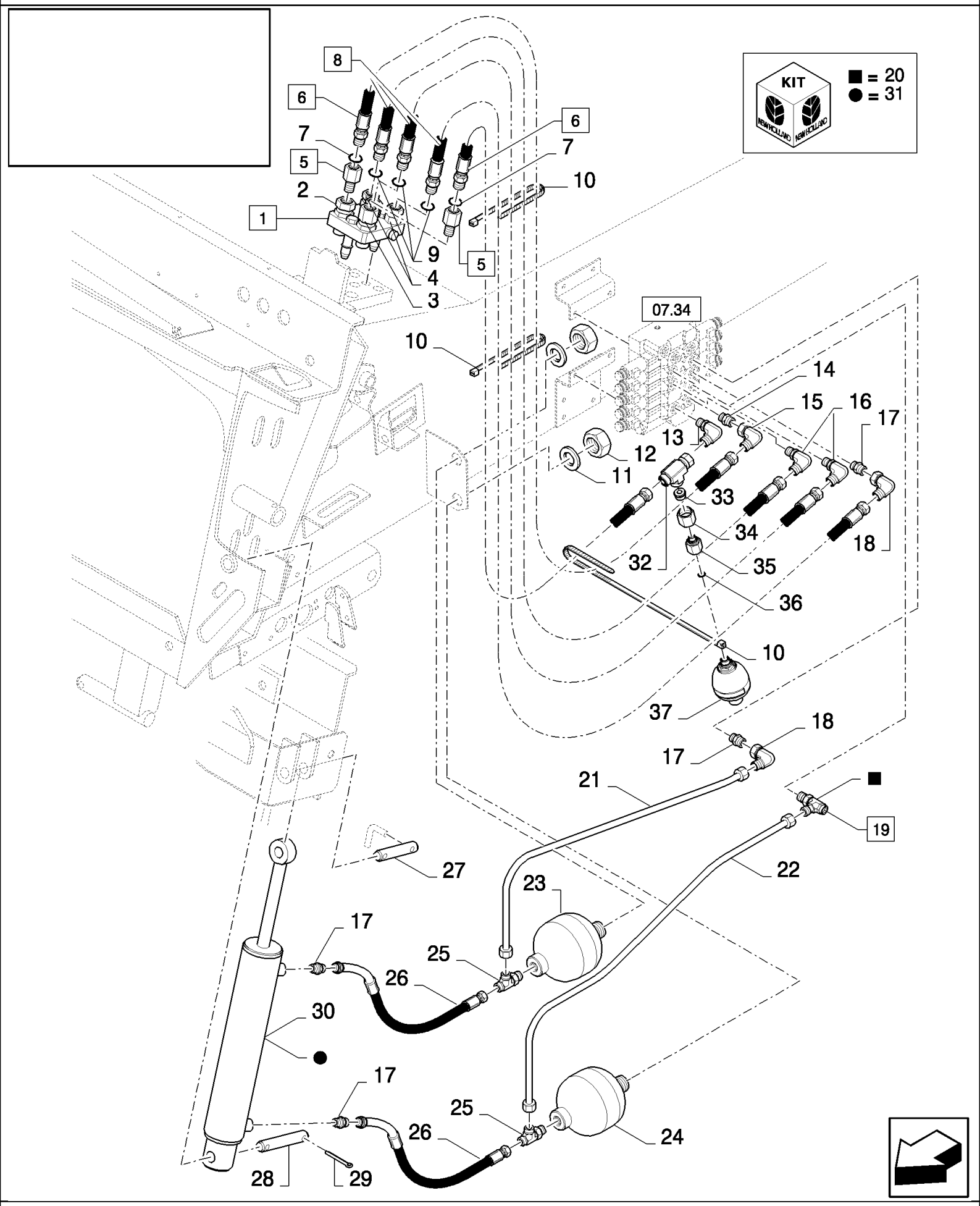

CX880 COMBINE - BASE UNIT (2/01-)

07.33(01) STRAW ELEVATOR HYDRAULICS WITH LATERAL FLOTATION AND HYDRAULIC REEL DRIVE

ссылка	Номер детали	Кол-во	Описание
1	84435010	1	COUPLING, QUICK, MALE, (2 to 4)
2	84435503	1	CONNECTOR, HYD.,
3	84435502	1	CONNECTOR, HYD.,
4	84435504	3	CONNECTOR, HYD.,
5	84989481	2	ADAPTER,
6	84068627	2	HOSE, FLEXIBLE, (7)
7	167269	1	O-RING, 10-1, 90 Duro, .755" ID x .097" Thk,
8	84068626	3	HOSE, FLEXIBLE, (9)
9	9617873	1	O-RING, 6-1, 90 Duro, .468" ID x .078" Thk,
10	396718	3	STRAP,
11	140110	2	WASHER,
12	308823	2	NUT, M28 x 1.5, Cl 8,
13	86579693	1	ELBOW, 90є, 1"-14 ORFS x M18 x 1.5 ORB, , SEE FIGURE 07.502
14	86579679	1	CONNECTOR, HYD., 1"-14 ORFS x M18 x 1.5 ORB, , SEE FIGURE 07.502
15	84989393	1	ELBOW, 90є, 1"-14 ORFS x 1"-14 Fem Sw, , SEE FIGURE 07.502
16	86579688	2	ELBOW, 90є, 11/16"-18 ORFS x M18 x 1.5 ORB, , SEE FIGURE 07.502
17	86579673	4	CONNECTOR, HYD., 11/16"-16 ORFS x M18 x 1.5 ORB, , SEE FIGURE 07.502
18	84989392	2	ELBOW, 90є, 11/16"-16 ORFS x 11/16"-16 Fem Sw, , SEE FIGURE 07.502
19	84062490	1	VALVE, PRESSURE RELIEF, (20)
20	84989501	1	KIT, SEALS,
21	84989480	1	TUBE, HYD, , BSN C487
21	84068625	1	HOSE, FLEXIBLE, , ASN D488
22	84989476	1	TUBE, HYD, , BSN C487
22	84068625	1	HOSE, FLEXIBLE, , ASN D488
23	84437249	1	ACCUMULATOR, 80 bar, BSN C271
23	84435797	1	ACCUMULATOR, , ASN D272
24	84437250	1	ACCUMULATOR, 100 bar, BSN C271
24	84435797	1	ACCUMULATOR, , ASN D272
25	86597759	2	TEE, 13/16"-16 ORFS x M18 x 1.5 ORB Run, , SEE FIGURE 07.502
26	84068625	2	HOSE, FLEXIBLE,
27	89500923	1	PIN,
28	9593306	1	PIN,
29	412686	1	PIN, SPLIT (COTTER), M5 x 32,
30	84071894	1	HYDRAULIC CYLINDER,
31	84057475	1	KIT, SEALS, , SV ENGRAVED IN CYLINDER
31	86557266	1	KIT, SEALS,
32	84989850	1	CONNECTION, 3 WAY,
33	84442654	1	RING,
34	85802819	1	NUT, PIPE UNION,
35	84442628	1	CONNECTOR, HYD.,
36	84038227	1	GASKET,
37	84442621	1	ACCUMULATOR,

07.34(01) STRAW ELEVATOR STACK VALVE WITH LATERAL FLOTATION AND HYDRAULIC REEL DRIVE

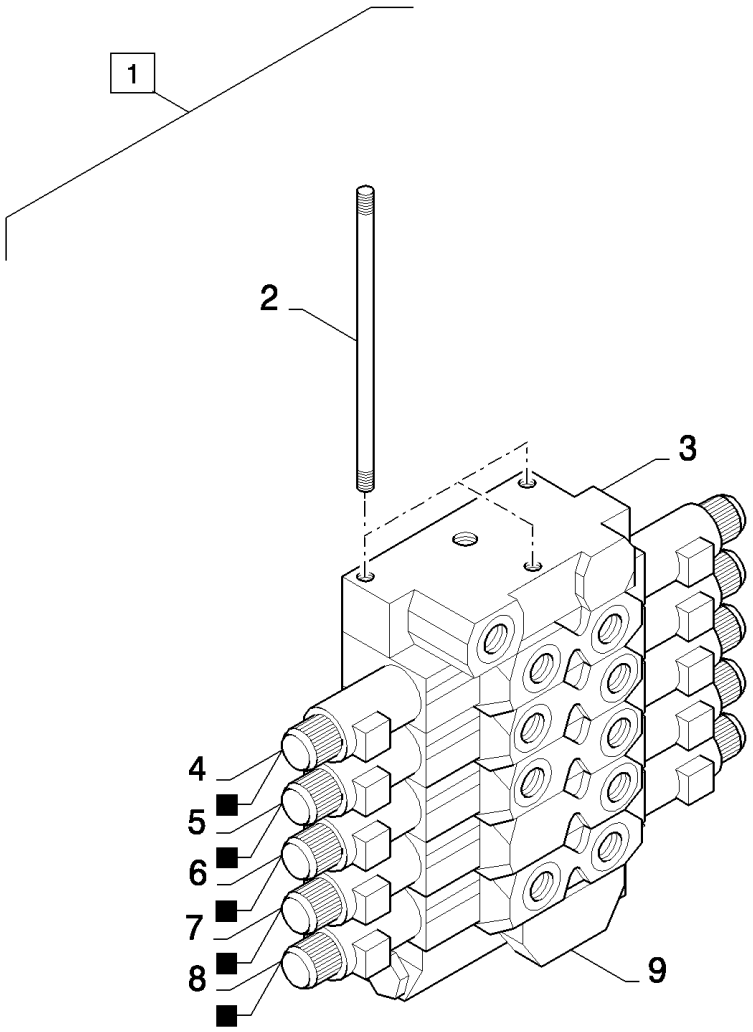

KIT

■ = 10

CX880 COMBINE - BASE UNIT (2/01-)

07.34(01) STRAW ELEVATOR STACK VALVE WITH LATERAL FLOTATION AND HYDRAULIC REEL DRIVE

ссылка	Номер детали	Кол-во	Описание
1	84073785	1	VALVE, HYDRAULIC,
2	86580371	3	ROD, THREADED,
3	86580294	1	VALVE, HYDRAULIC,
4	86580295	1	VALVE, HYDRAULIC, REVERSER (10)
5	86580299	1	VALVE, HYDRAULIC, LF (10)
6	86580296	1	VALVE, HYDRAULIC, REEL H (10)
7	86580297	1	VALVE, HYDRAULIC, REEL V (10)
8	86580300	1	VALVE SECTION, HYD, REEL DRIVE (10)
9	86580298	1	VALVE, HYDRAULIC,
10	84014433	5	KIT, SEALS,

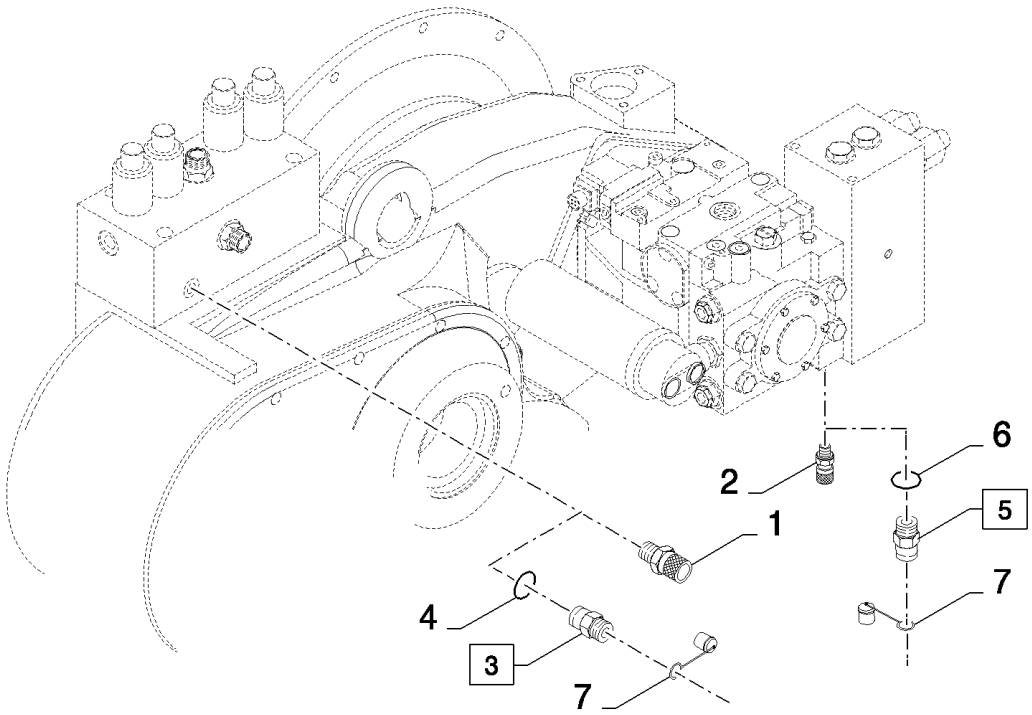
6
2
5
1
7
4
3
7

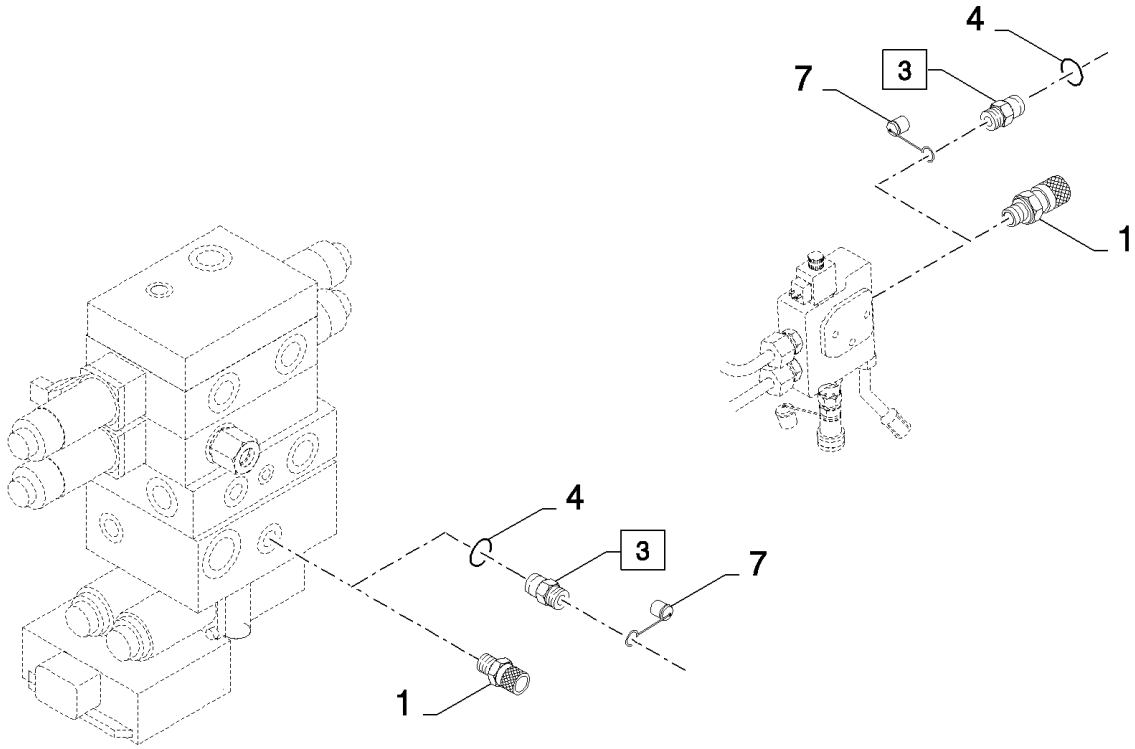
4
7
3
1
4
3
7
1

CX880 COMBINE - BASE UNIT (2/01-)

07.35(01) HYDRAULIC DIAGNOSTIC

ссылка	Номер детали	Кол-во	Описание
1	84100207	3	COUPLING, QUICK, MALE,
2	84021707	1	CONNECTOR, HYD.,
3	84320565	3	COUPLING, (4), FOR NA ONLY
4	86598099	1	O-RING, Cl 6, 11.3MM ID x 2.2 Thk, , FOR NA ONLY
5	86596853	1	COUPLING, QUICK, MALE, (6), FOR NA ONLY
6	9617873	1	O-RING, 6-1, 90 Duro, .468" ID x .078" Thk, , FOR NA ONLY
7	86502604	4	DUST CAP, , FOR NA ONLY

07.36(01) CHAFF SPREADER, HYDRAULICS

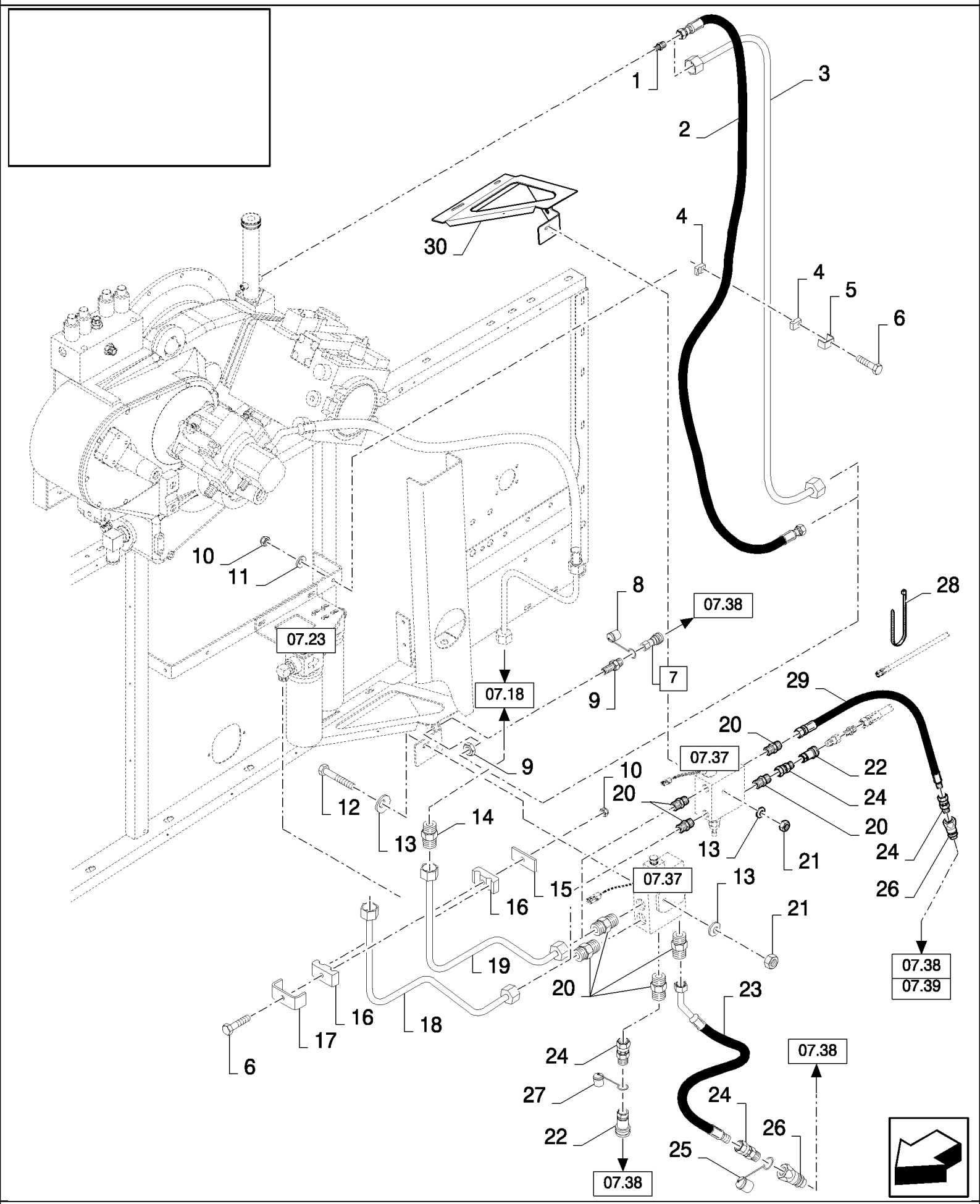

CX880 COMBINE - BASE UNIT (2/01-)

07.36(01) CHAFF SPREADER, HYDRAULICS

ссылка	Номер детали	Кол-во	Описание
1	86580177	1	CONNECTOR, HYD., 11/16"-16 ORFS x M12 x 1.5 ORB, , SEE FIGURE 07.502
2	86623770	1	HOSE, FLEXIBLE,
3	84431560	1	TUBE, HYD,
4	433008	2	CLAMP,
5	442340	1	SUPPORT,
6	120056	2	SCREW, Hex, M6 x 50, 8.8,
7	86592081	1	COUPLING, QUICK, MALE, , BSN C305
7	84444600	1	COUPLING, QUICK, MALE, (8), ASN D306
8	86592085	1	DUST CAP, , BSN C305
8	84444810	1	DUST CAP, , ASN D306
9	84100089	1	CONNECTOR, HYD., , BSN C305
10	412152	2	NUT, LOCK, M6 x 1, Cl 8.8,
11	322357	1	WASHER, SPRING, Belleville, M6,
12	120073	2	BOLT, Hex, M10 x 80, 8.8,
13	140045	4	WASHER, SPRING, Belleville, M10,
14	84431473	1	CONNECTOR, HYD., , SEE FIGURE 07.502
15	434103	1	PLATE,
16	430356	2	CLAMP,
17	431942	1	SUPPORT, Hex Hd, #10-32 x 1/2",
18	84431443	1	TUBE, HYD,
19	84431440	1	TUBE, HYD,
20	86579680	4	CONNECTOR, HYD., 1"-14 ORFS x M22 x 1.5 ORB, , SEE FIGURE 07.502
21	100016	2	NUT, M10, Cl 8,
22	86592079	1	COUPLING, QUICK, MALE,
23	84068312	1	HOSE, FLEXIBLE, , BSN C323
24	84062146	2	CONNECTOR, HYD.,
25	86592084	1	DUST CAP, , BSN C305
26	86592080	1	COUPLING, QUICK, MALE,
27	86592083	1	DUST CAP, , BSN C305
28	396718	1	STRAP, , ASN D324
29	84446650	1	HOSE, FLEXIBLE, , ASN D324
30	84443744	1	SUPPORT,

07.37(01) CHAFF SPREADER, HYDRAULICS, VALVE

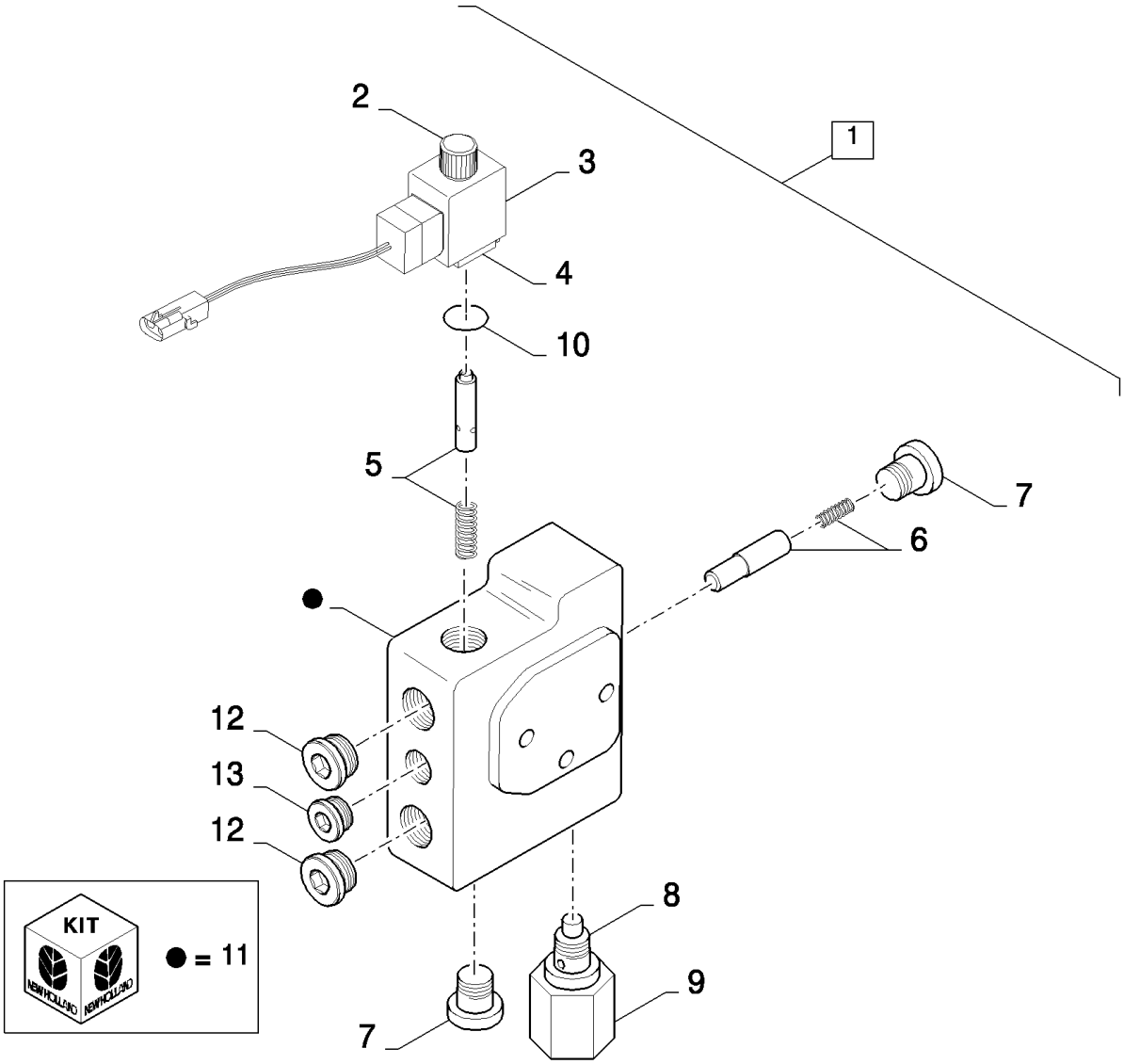

CX880 COMBINE - BASE UNIT (2/01-)

07.37(01) CHAFF SPREADER, HYDRAULICS, VALVE

ссылка	Номер детали	Кол-во	Описание
1	86531644	1	VALVE, HYDRAULIC, (2 to 10), BSN C323
1	84442311	1	VALVE, HYDRAULIC, (3,7,9,11,12,13), ASN D324
1	84442312	1	VALVE, HYDRAULIC, (3,7,9,11,12,13), FOR REBUILD KIT ONLY
2	86623196	1	NUT, , BSN C323
3	86623195	1	HOUSING, , BSN C323
3	84447230	1	VALVE, CHECK, , ASN D324
4	86623134	1	COIL, , BSN C323
5	86623133	1	KIT, REPAIR, , BSN C323
6	86623131	1	KIT, REPAIR, , BSN C323
7	86508737	1	PLUG, HSH, 7/8"-14UNF, BSN C323
7	84447229	1	VALVE, HYDRAULIC, , ASN D324
8	86623132	1	KIT, REPAIR, , BSN C323
9	86623129	1	VALVE, PRESSURE RELIEF, , BSN C323
9	84447231	1	PLUG, , ASN D324
9	84448202	1	VALVE, HYDRAULIC, , FOR REBUILD KIT ONLY
10	167269	1	O-RING, 10-1, 90 Duro, .755" ID x .097" Thk, , BSN C323
11	84447233	1	KIT, SEALS, , ASN D324
12	86598047	AR	PLUG, Hex Soc, M22 x 1.5, ORB,
13	86598044	AR	PLUG, Hex Soc, M14 x 1.5, ORB,

07.38(01) CHAFF SPREADER, HYDRAULICS WITH CHOPPER

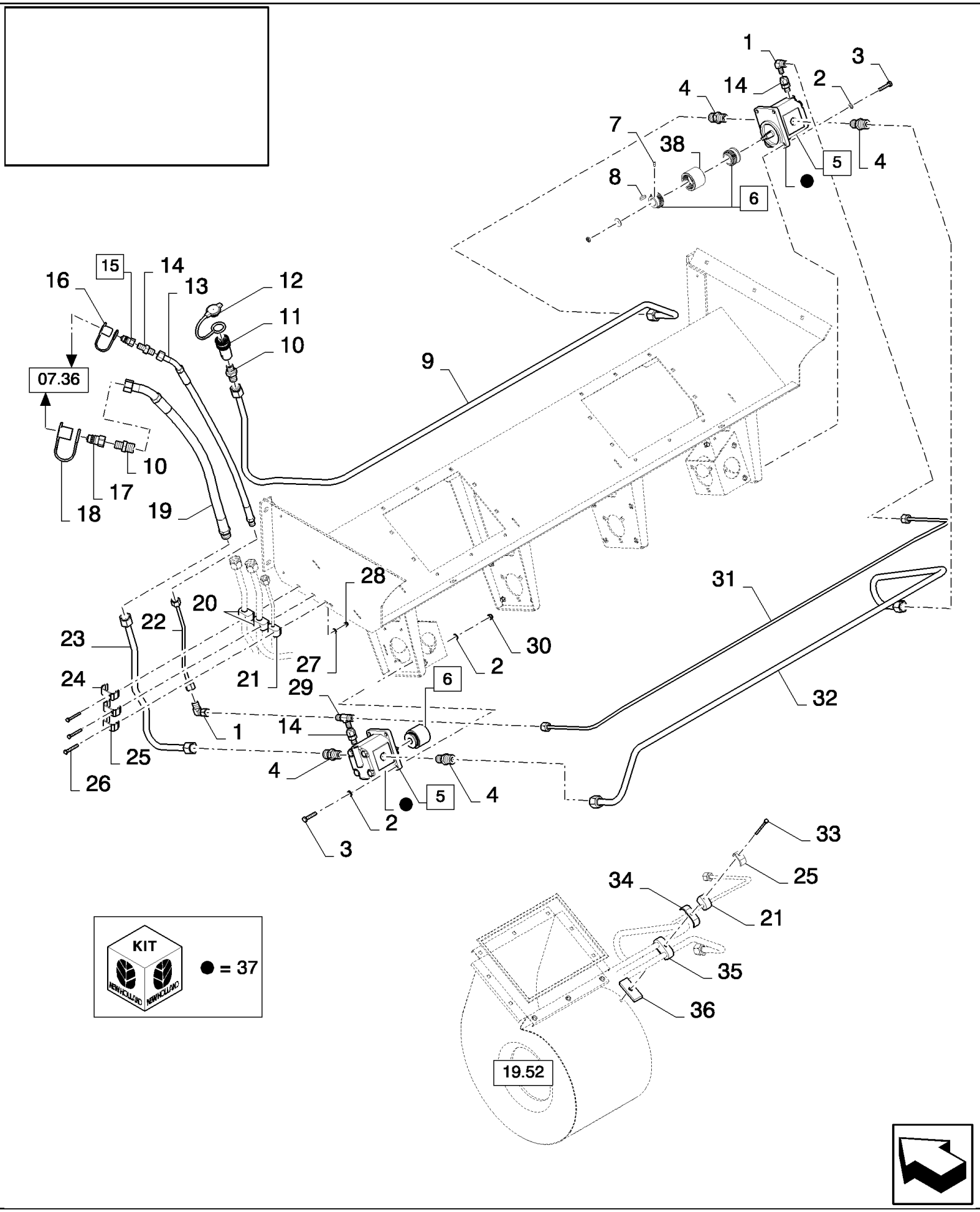

CX880 COMBINE - BASE UNIT (2/01-)

07.38(01) CHAFF SPREADER, HYDRAULICS WITH CHOPPER

ссылка	Номер детали	Кол-во	Описание
1	84989392	2	ELBOW, 90є, 11/16"-16 ORFS x 11/16"-16 Fem Sw,
2	140016	16	WASHER, M8 x 16 x 1.6,
3	412479	8	BOLT, Hex, M8 x 35, 8.8,
4	86579680	4	CONNECTOR, HYD., 1"-14 ORFS x M22 x 1.5 ORB,
5	84078049	2	MOTOR, HYDRAULIC, (37)
6	84078048	2	BLOCK, COUPLING, (38)
7	84438711	2	SCREW,
8	385002	2	KEY,
9	84438732	1	TUBE, HYD, , FOR CX820, CX840, CX860, CX880 ONLY
9	84434454	1	TUBE, HYD, , FOR CX720, CX740, CX760, CX780 ONLY
10	9621483	2	CONNECTOR, HYD., 1"-14 ORFS x 7/8"-14 ORB, , BSN C305
10	83963000	2	CONNECTOR, HYD., , ASN D306
11	86592079	1	COUPLING, QUICK, MALE,
12	86592083	1	DUST CAP,
13	84068311	1	HOSE, FLEXIBLE, , BSN C323
13	84447087	1	HOSE, FLEXIBLE, , ASN D324
14	89993143	3	CONNECTOR, HYD., , BSN C305
14	89993143	2	CONNECTOR, HYD., , ASN D306
15	86592082	1	COUPLING, QUICK, MALE, , BSN C305
15	84444601	1	COUPLING, QUICK, MALE, (16), ASN D306
16	86592086	1	DUST CAP, , BSN C305
16	84444818	1	DUST CAP, , ASN D306
17	86592080	1	COUPLING, QUICK, MALE,
18	86592084	1	DUST CAP,
19	84068312	1	HOSE, FLEXIBLE, , BSN C323
19	84446650	1	HOSE, FLEXIBLE, , ASN D324
20	433007	2	CLAMP,
21	433008	6	CLAMP,
22	84438759	1	TUBE, HYD, , FOR CX820, CX840, CX860, CX880 ONLY
22	84434102	1	TUBE, HYD, , FOR CX720, CX740, CX760, CX780 ONLY
23	84438761	1	TUBE, HYD, , FOR CX820, CX840, CX860, CX880 ONLY
23	84434118	1	TUBE, HYD, , FOR CX720, CX740, CX760, CX780 ONLY
24	433100	2	SUPPORT,
25	442340	3	SUPPORT,
26	43118	3	BOLT, Hex, M6 x 40, 8.8,
27	86588450	3	WASHER, M6,
28	412152	3	NUT, LOCK, M6 x 1, Cl 8.8,
29	86591334	1	TEE, 11/16"-16 ORFS x 11/16"-16 Fem Sw Br,
30	412250	8	NUT, LOCK, M8 x 1.25, Cl 8,
31	84438736	1	TUBE, HYD, , FOR CX820, CX840, CX860, CX880 ONLY
31	84434452	1	TUBE, HYD, , FOR CX720, CX740, CX760, CX780 ONLY
32	84438737	1	TUBE, HYD, , FOR CX820, CX840, CX860, CX880 ONLY
32	84434456	1	TUBE, HYD, , FOR CX720, CX740, CX760, CX780 ONLY
33	120056	2	SCREW, Hex, M6 x 50, 8.8,

07.38(01) CHAFF SPREADER, HYDRAULICS WITH CHOPPER

ссылка	Номер детали	Кол-во	Описание
34	431942	2	SUPPORT, Hex Hd, #10-32 x 1/2",
35	430356	4	CLAMP,
36	84438863	2	PLATE,
37	84447420	1	KIT, REPAIR,
38	87380171	1	BUSHING, DRIVE,

07.39(01) CHAFF SPREADER, HYDRAULICS WITHOUT CHOPPER

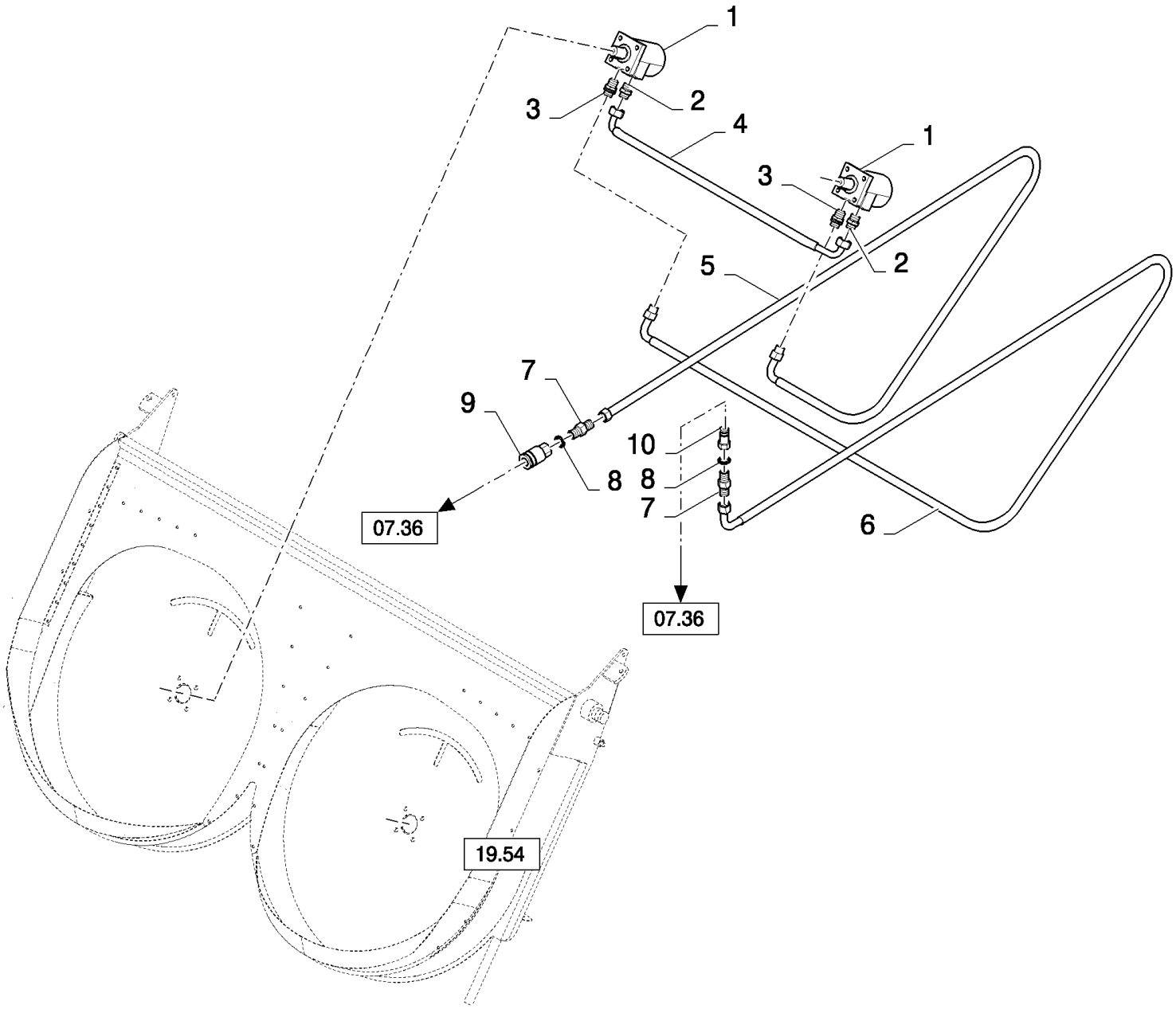

CX880 COMBINE - BASE UNIT (2/01-)

07.39(01) CHAFF SPREADER, HYDRAULICS WITHOUT CHOPPER

ссылка	Номер детали	Кол-во	Описание
1	84444259	2	MOTOR, HYDRAULIC,
2	84444319	2	CONNECTOR, HYD.,
3	84444320	2	CONNECTOR, HYD.,
4	84444296	1	HOSE, FLEXIBLE, , FOR CX820, CX840, CX860, CX880 ONLY
4	84444295	1	HOSE, FLEXIBLE, , FOR CX720, CX740, CX760, CX780 ONLY
5	84444350	1	HOSE, FLEXIBLE,
6	84444351	1	CONNECTOR, HYD.,
7	84447026	2	CONNECTOR, HYD.,
8	129270	2	O-RING, 5-1, 90 Duro, .414" ID x .072" Thk,
9	84447029	1	COUPLING, QUICK, MALE,
10	84447028	1	COUPLING, QUICK, MALE,

07.40(01) SMART STEER AUTO-GUIDANCE KIT - HYDRAULICS

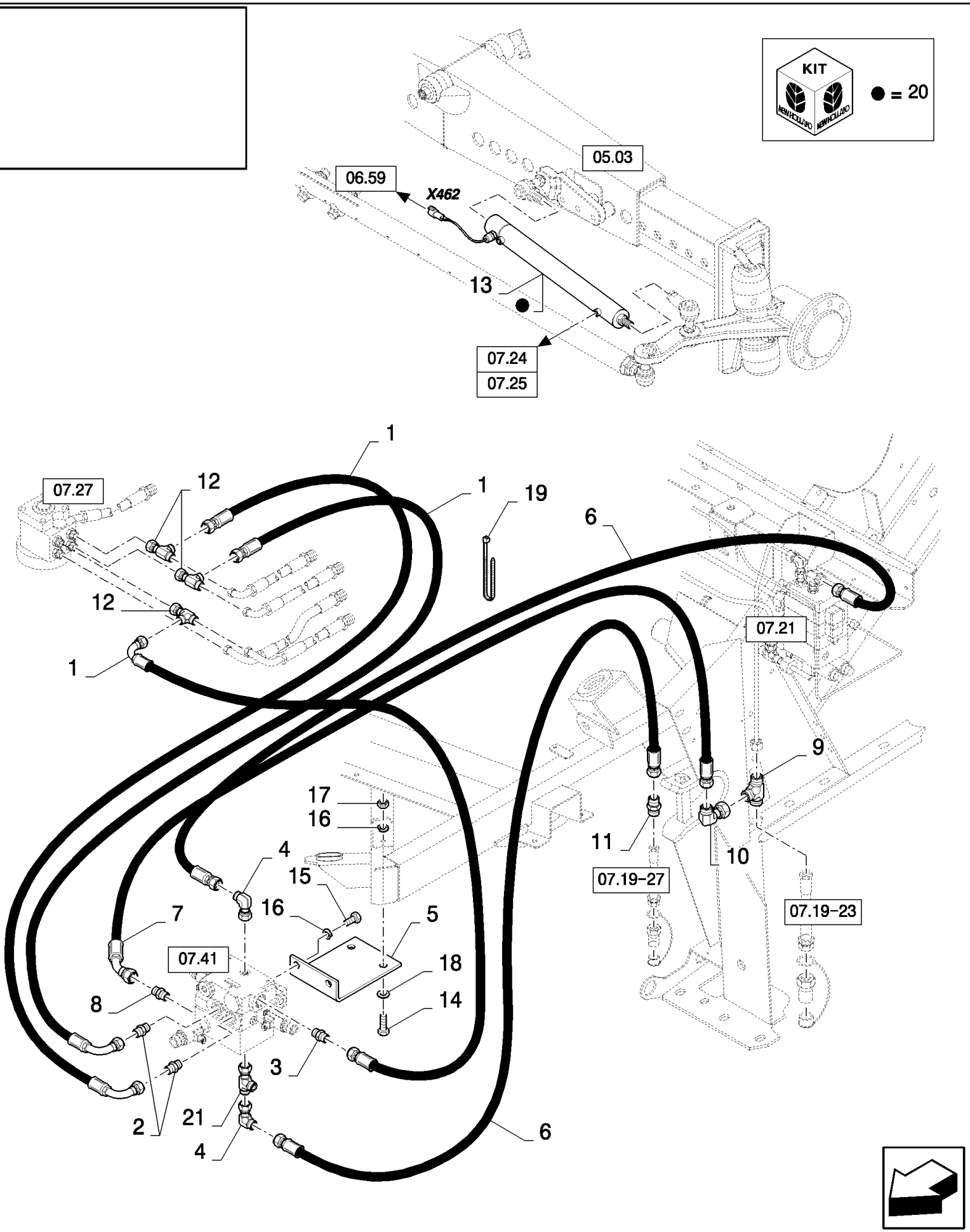

CX880 COMBINE - BASE UNIT (2/01-)

07.40(01) SMART STEER AUTO-GUIDANCE KIT - HYDRAULICS

ссылка	Номер детали	Кол-во	Описание
1	84068062	3	HOSE, FLEXIBLE,
2	86579676	2	CONNECTOR, HYD., 13/16"-16 ORFS x M18 x 1.5 ORB,
3	86597761	1	CONNECTOR, HYD., 13/16"-16 ORFS x M27 x 2 ORB,
4	86580178	2	ELBOW, 90є, 11/16"-18 ORFS x M12 x 1.5 ORB,
5	84455528	1	SUPPORT,
6	86623770	2	HOSE, FLEXIBLE,
7	84435017	1	HOSE, FLEXIBLE,
8	NS	1	NOT SERVICED,
9	84989665	1	TEE, 1"-14 ORFS,
10	84989393	1	ELBOW, 90є, 1"-14 ORFS x 1"-14 Fem Sw,
11	84431546	1	UNION, 11/16"-16 ORFS,
12	84989849	3	CONNECTOR, HYD.,
13	84448270	1	HYDRAULIC CYLINDER,
14	43127	2	BOLT, Hex, M8 x 25, 8.8,
15	16043224	2	BOLT, Hex, M8 x 16, 8.8, Full Thd,
16	322358	4	WASHER, SPRING, Belleville, M8,
17	353308	2	NUT, M6 x 1, Cl 8,
18	378243	2	WASHER, M8,
19	396718	4	STRAP,
20	84455606	1	KIT, SEALS,
21	84989850	1	CONNECTION, 3 WAY,
22	84068094	1	HOSE, FLEXIBLE, NOT ILLUSTRATED

07.41(01) SMART STEER AUTO-GUIDANCE KIT - HYDRAULIC VALVE

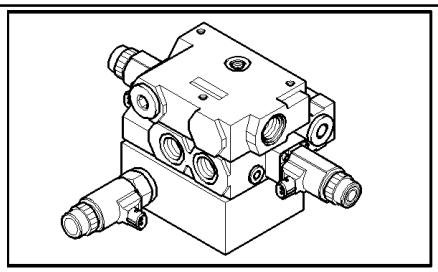

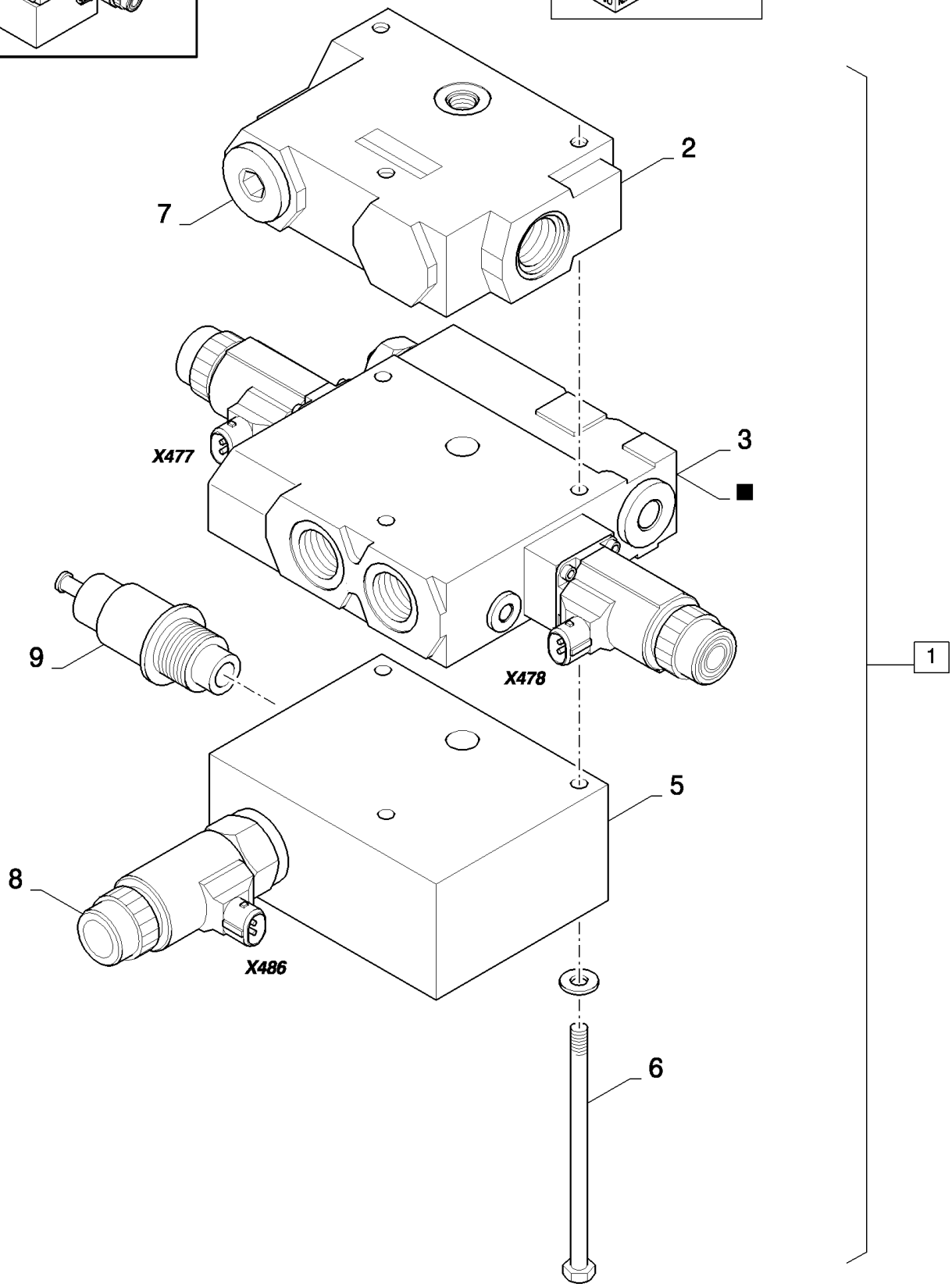

CX880 COMBINE - BASE UNIT (2/01-)

07.41(01) SMART STEER AUTO-GUIDANCE KIT - HYDRAULIC VALVE

ссылка	Номер детали	Кол-во	Описание
1	84455093	1	VALVE, HYDRAULIC, (2 to 6), BSN C423
1	87313989	1	VALVE, HYDRAULIC, , ASN D424
2	86580294	1	VALVE, HYDRAULIC,
3	84455371	1	VALVE, HYDRAULIC,
4	84014433	1	KIT, SEALS,
5	86580338	1	VALVE, HYDRAULIC, , BSN C423
5	84461195	1	PLATE, BASE, , ASN D424
6	84455372	3	ROD, THREADED, , BSN C423
6	84461196	3	TIE-ROD, THREADED, , ASN D424
7	86598047	1	PLUG, Hex Soc, M22 x 1.5, ORB, , ASN D424
8	84461271	1	VALVE, HYDRAULIC, , ASN D424
9	84462258	1	VALVE, , ASN D424

07.501(01) TUBE CLAMPS AND HYDRAULIC TUBES

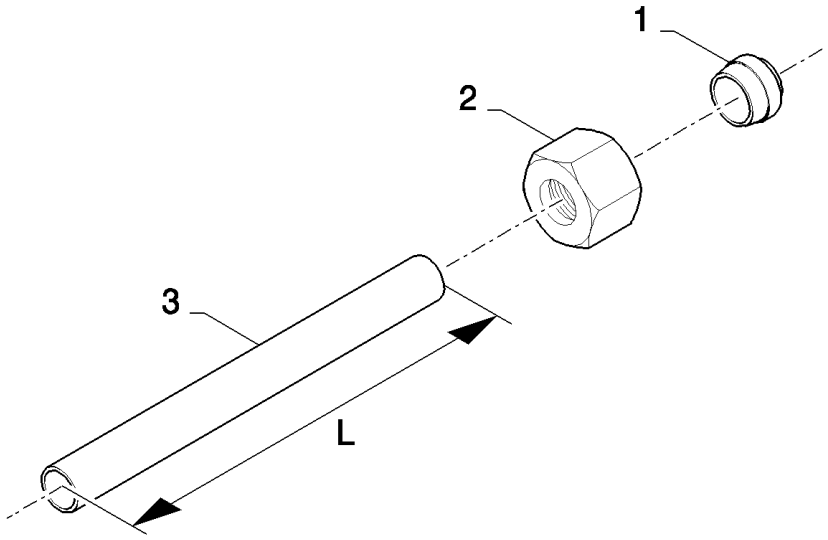

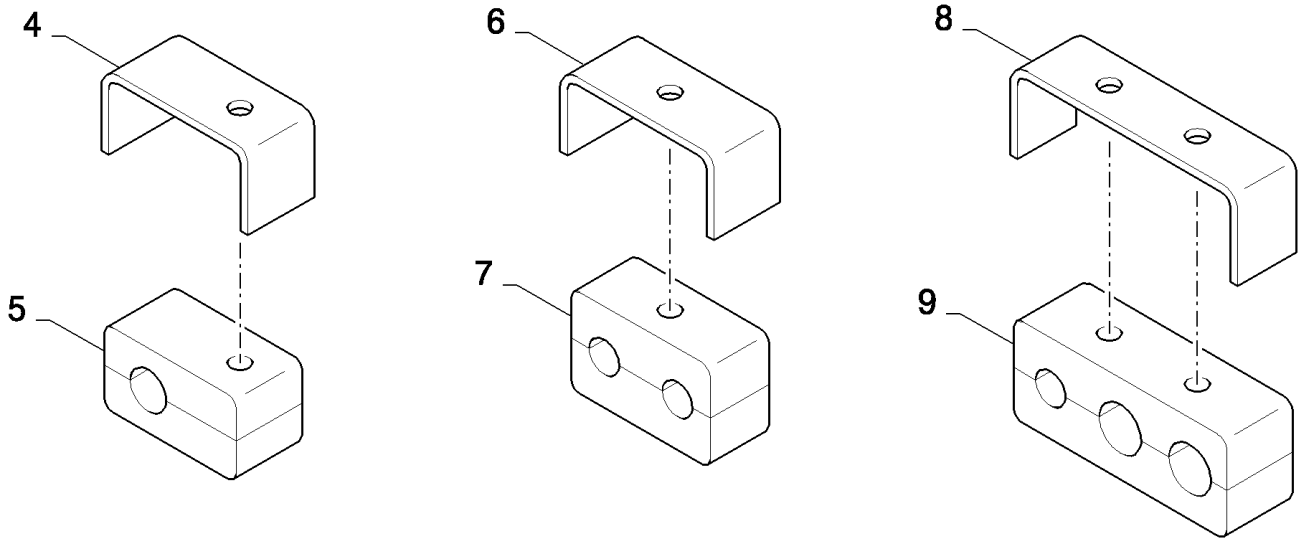

CX880 COMBINE - BASE UNIT (2/01-)

07.501(01) TUBE CLAMPS AND HYDRAULIC TUBES

ссылка	Номер детали	Кол-во	Описание
1	335136	AR	FERRULE, DIA.:8MM
1	150014	AR	FERRULE, DIA.:10MM
1	150015	AR	FERRULE, DIA.:12MM
1	335169	AR	FERRULE, DIA.:16MM
1	335168	AR	FERRULE, DIA.:18MM
1	412528	AR	FERRULE, DIA.:28MM
2	335135	AR	NUT, DIA.:8MM
2	86548975	AR	NUT, DIA.:10MM
2	86548976	AR	NUT, DIA.:12MM
2	335171	AR	NUT, DIA.:16MM
2	335170	AR	NUT, DIA.:18MM
2	412527	AR	NUT, DIA.:28MM
3	371540	AR	TUBE, RIGID, DIA.:8MM,L:2M
3	371539	AR	TUBE, RIGID, DIA.:10MM,L:2M
3	9513719	AR	TUBE, RIGID, DIA.:12MM,L:2M
3	371536	AR	TUBE, RIGID, DIA.:16MM,L:2M
3	371534	AR	TUBE, RIGID, DIA.:18MM,L:2M
3	9811333	AR	TUBE, RIGID, DIA.:28MM,L:2M
3	75931	AR	TUBE, RIGID, DIA.:3/8",L:48"
3	75932	AR	TUBE, RIGID, DIA.:1/2",L:48"
3	75933	AR	TUBE, RIGID, DIA.:5/8",L:48"
3	75934	AR	TUBE, RIGID, DIA.:3/4",L:48"
4	433101	AR	SUPPORT, 8-10MM
4	442340	AR	SUPPORT, 12MM
4	433100	AR	SUPPORT, 16MM-3/4"
4	743318	AR	SUPPORT, 28MM
5	433008	AR	CLAMP, 8-12MM
5	433007	AR	CLAMP, 16MM-3/4"
5	457546	AR	CLAMP, 28MM
6	431941	AR	SUPPORT, 8-12MM
6	431942	AR	SUPPORT, Hex Hd, #10-32 x 1/2", 16MM-3/4"
6	743320	AR	SUPPORT, 28MM
7	430357	AR	CLAMP, 8-12MM
7	430356	AR	CLAMP, 16MM-3/4"
7	457547	AR	CLAMP, 28MM
8	455534	AR	SUPPORT,
9	455533	AR	CLAMP,

07.501(02) STRAIGHT CONNECTIONS AND REPAIR FOR ORFS HYDRAULIC TUBES

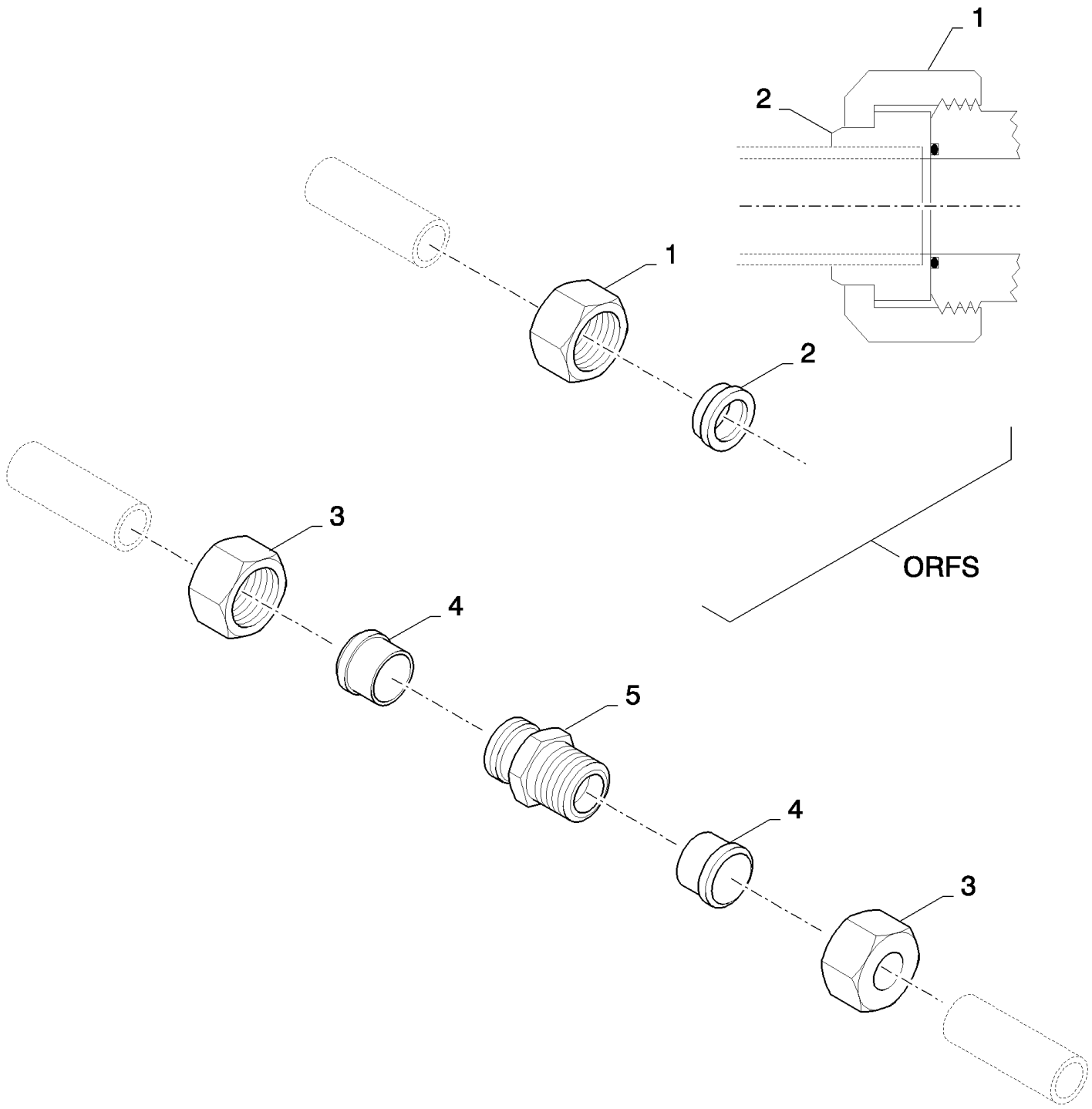

CX880 COMBINE - BASE UNIT (2/01-)

07.501(02) STRAIGHT CONNECTIONS AND REPAIR FOR ORFS HYDRAULIC TUBES

ссылка	Номер детали	Кол-во	Описание
1	84052987	AR	NUT, PIPE UNION, DIA.8MM
2	84819190	AR	RING, DIA.8MM
3	335135	AR	NUT, DIA.8MM
4	335136	AR	FERRULE, DIA.8MM
5	335172	AR	CONNECTOR, HYD., DIA.8MM
-			
1	85802628	AR	CONNECTOR, HYD., DIA.12MM
2	84819191	AR	RING, DIA.12MM
3	86548976	AR	NUT, DIA.12MM
4	150015	AR	FERRULE, DIA.12MM
5	150018	AR	CONNECTOR, HYD., DIA.12MM
-			
1	85802819	AR	NUT, PIPE UNION, DIA.16MM
2	84819192	AR	RING, DIA.16MM
3	335171	AR	NUT, DIA.16MM
4	335169	AR	FERRULE, DIA.16MM
5	335174	AR	CONNECTOR, HYD., DIA.16MM
-			
1	85802972	AR	CONNECTOR, HYD., DIA.20MM
2	84819193	AR	RING, DIA.20MM
3	NS	AR	NOT SERVICED, DIA.20MM
4	NS	AR	NOT SERVICED, DIA.20MM
5	NS	AR	NOT SERVICED, DIA.20MM
-			
1	NS	AR	NOT SERVICED, DIA.28MM
2	NS	AR	NOT SERVICED, DIA.28MM
3	412527	AR	NUT, DIA.28MM
4	412528	AR	FERRULE, DIA.28MM
5	457545	AR	CONNECTOR, HYD., DIA.28MM
-			
1	84052987	AR	NUT, PIPE UNION, DIA.1/4"
2	84819194	AR	RING, DIA.1/4"
3	710852	AR	NUT, TUBE, Flareless, 7/16"-20, DIA.1/4"
4	710853	AR	FERRULE, DIA.1/4"
5	710715	AR	CONNECTOR, HYD., DIA.1/4"
-			
1	84052987	AR	NUT, PIPE UNION, DIA.3/8"
2	86541137	AR	RING, DIA.3/8"
3	514926	AR	NUT, TUBE, 37є, 9/16"-18, Type B, DIA.3/8"
4	514929	AR	FERRULE, Flareless, 3/8" Tube,
5	322897	AR	CONNECTOR, HYD., DIA.3/8"
-			
1	85802628	AR	CONNECTOR, HYD., DIA.1/2"
2	86541138	AR	RING, DIA.1/2"

07.501(02) STRAIGHT CONNECTIONS AND REPAIR FOR ORFS HYDRAULIC TUBES

ссылка	Номер детали	Кол-во	Описание
3	514925	AR	NUT, DIA.1/2"
4	514928	AR	FERRULE, Flareless, 1/2" Tube, DIA.1/2"
5	322891	AR	ADAPTER, DIA.1/2"
-			
1	85802819	AR	NUT, PIPE UNION, DIA.5/8"
2	84819195	AR	RING, DIA.5/8"
3	514924	AR	NUT, TUBE, Flareless, 1 5/16"-12, DIA.5/8"
4	514927	AR	FERRULE, DIA.5/8"
5	325062	AR	ADAPTER, DIA.5/8"
-			
1	85802972	AR	CONNECTOR, HYD., DIA.3/4"
2	84819196	AR	RING, DIA.3/4"
3	325338	AR	NUT, SPECIAL, DIA.3/4"
4	325339	AR	FERRULE, DIA.3/4"
5	286215	AR	CONNECTOR, HYD., DIA.3/4"
-			
1	NS	AR	NOT SERVICED, DIA.1"
2	NS	AR	NOT SERVICED, DIA.1"
3	268279	AR	NUT, DIA.1"
4	268280	AR	SLEEVE, DIA.1"
5	84819197	AR	CONNECTOR, HYD., DIA.1"

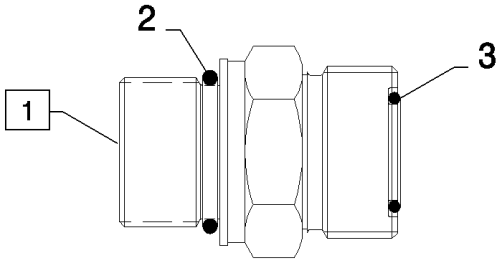

Ref. 1	Ref. 2	Ref. 3
86593173	86598098	89825770
86580177	86598098	89993141
86579671	86598099	89993141
86579672	86598100	89993141
86579673	86598101	89993141
86579674	86598099	89992298
86579675	86598100	89992298
86579676	86598101	89992298
86579678	86598102	89992298
86579679	86598101	89992069
86579680	86598102	89992069
86579681	86598102	89991976
86597761	86598103	89992298
86597760	86598103	89992069
86579682	86598103	89991976
86579683	86598104	89991976
86580179	86598104	89824050
86579684	86598104	89824051
86579685	86598105	89824051
86596907	89825770	86598098

CX880 COMBINE - BASE UNIT (2/01-)

07.502(01) HYDRAULIC FITTINGS

ссылка	Номер детали	Кол-во	Описание
1	86593173	AR	CONNECTOR, HYD., 9/16"-18 ORFS x M12 x 1.5 ORB,
1	86580177	AR	CONNECTOR, HYD., 11/16"-16 ORFS x M12 x 1.5 ORB,
1	86579671	AR	CONNECTOR, HYD., 11/16"-16 ORFS x M14 x 1.5 ORB,
1	86579672	AR	CONNECTOR, HYD., 11/16"-16 ORFS x M16 x 1.5 ORB,
1	86579673	AR	CONNECTOR, HYD., 11/16"-16 ORFS x M18 x 1.5 ORB,
1	86579674	AR	CONNECTOR, HYD., 13/16"-16 ORFS x M14 x 1.5 ORB,
1	86579675	AR	CONNECTOR, HYD., 13/16"-16 ORFS x M16 x 1.5 ORB,
1	86579676	AR	CONNECTOR, HYD., 13/16"-16 ORFS x M18 x 1.5 ORB,
1	86579678	AR	CONNECTOR, HYD., 13/16"-16 ORFS x M22 x 1.5 ORB,
1	86579679	AR	CONNECTOR, HYD., 1"-14 ORFS x M18 x 1.5 ORB,
1	86579680	AR	CONNECTOR, HYD., 1"-14 ORFS x M22 x 1.5 ORB,
1	86579681	AR	CONNECTOR, HYD., 1 3/16"-12 ORFS x M22 x 1.5 ORB,
1	86597761	AR	CONNECTOR, HYD., 13/16"-16 ORFS x M27 x 2 ORB,
1	86597760	AR	CONNECTOR, HYD., 1"-14 ORFS x M27 x 2 ORB,
1	86579682	AR	CONNECTOR, HYD., 1 3/16"-12 ORFS x M27 x 2 ORB,
1	86579683	AR	CONNECTOR, HYD., 1 3/16"-12 ORFS x M33 x 2 ORB,
1	86580179	AR	CONNECTOR, HYD., 1 7/16"-12 ORFS x M22 x 2 ORB,
1	86579684	AR	CONNECTOR, HYD., 1 11/16"-12 ORFS x M33 x 2 ORB,
1	86579685	AR	CONNECTOR, HYD., 1 11/16"-12 ORFS x M42 x 2 ORB,
1	86596907	AR	CONNECTOR, HYD.,
2	86598098	AR	O-RING, Cl 6, 9.3MM ID x 2.2 Thk,
2	86598099	AR	O-RING, Cl 6, 11.3MM ID x 2.2 Thk,
2	86598100	AR	O-RING, Cl 6, 13.3MM ID x 2.2 Thk,
2	86598101	AR	O-RING, Cl 6, 15.3MM ID x 2.2 Thk,
2	86598102	AR	O-RING, Cl 6, 19.3MM ID x 2.2 Thk,
2	86598103	AR	O-RING, Cl 6, 23.6MM ID x 2.9 Thk,
2	86598104	AR	O-RING, Cl 6, 26.6MM ID x 2.9 Thk,
2	86598105	AR	O-RING, Cl 6, 38.6MM ID x 2.9 Thk,
2	9825770	AR	O-RING, -011, 90 Duro, .301" ID x .070" Thk,
3	9825770	AR	O-RING, -011, 90 Duro, .301" ID x .070" Thk,
3	9992069	AR	O-RING, -016, 90 Duro, .614" ID x .070" Thk,
3	9991976	AR	O-RING, -018, 90 Duro, .739" ID x .070" Thk,
3	9824050	AR	O-RING, -021, 90 Duro, .926" ID x .070" Thk,
3	9824051	AR	O-RING, -025, 90 Duro, 1.176" ID x .070" Thk,
3	86598098	AR	O-RING, Cl 6, 9.3MM ID x 2.2 Thk,
3	9993141	AR	O-RING, -012, 90 Duro, .364" ID x .070" Thk,
3	9992298	AR	O-RING, -014, 90 Duro, .489" ID x .070" Thk,

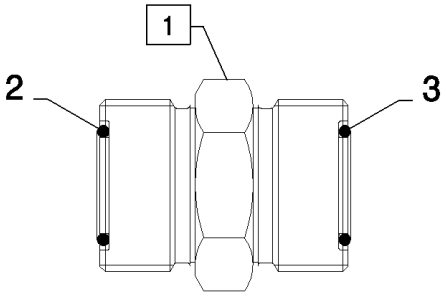

Ref. 1	Ref. 2	Ref. 3
84431546	89993141	89993141
84431547	89992298	89992298
84431472	89992298	89993141
84431473	89992069	89992069
84431302	89992069	89992298
84100407	89991976	89991976

CX880 COMBINE - BASE UNIT (2/01-)

07.502(02) HYDRAULIC FITTINGS

ссылка	Номер детали	Кол-во	Описание
1	84431546	AR	UNION, 11/16"-16 ORFS,
1	84431547	AR	UNION, 13/16"-16 ORFS,
1	84431472	AR	CONNECTOR, HYD.,
1	84431473	AR	CONNECTOR, HYD.,
1	84431302	AR	CONNECTOR, HYD.,
1	84100407	AR	UNION, 1 3/16"-12 ORFS,
2	9992069	AR	O-RING, -016, 90 Duro, .614" ID x .070" Thk,
2	9991976	AR	O-RING, -018, 90 Duro, .739" ID x .070" Thk,
3	9992069	AR	O-RING, -016, 90 Duro, .614" ID x .070" Thk,
3	9991976	AR	O-RING, -018, 90 Duro, .739" ID x .070" Thk,
2	9993141	AR	O-RING, -012, 90 Duro, .364" ID x .070" Thk,
3	9993141	AR	O-RING, -012, 90 Duro, .364" ID x .070" Thk,
2	9992298	AR	O-RING, -014, 90 Duro, .489" ID x .070" Thk,
3	9992298	AR	O-RING, -014, 90 Duro, .489" ID x .070" Thk,

07.502(03) HYDRAULIC FITTINGS, ANGULAR

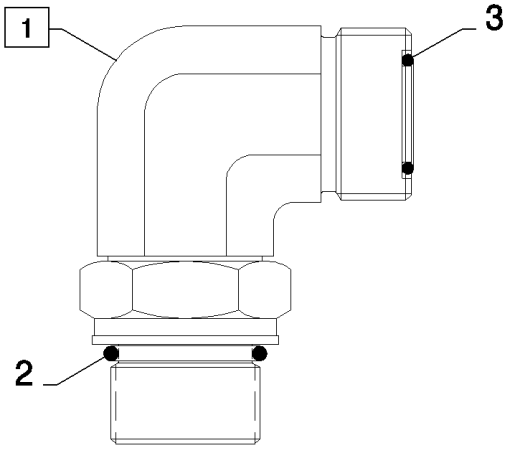

Ref. 1	Ref. 2	Ref. 3
84431522	86598098	89825770
84432241	86598099	89825770
86580178	86598098	89993141
86579686	86598099	89993141
86579687	86598100	89993141
86579688	86598101	89993141
86579689	86598099	89992298
86579690	86598100	89992298
86579691	86598101	89992298
86579692	86598102	89992298
86579693	86598101	89992069
86579694	86598102	89992069
86579695	86598102	89991976
84100209	86598103	89992069
86579697	86598103	89991976
86579698	86598104	89991976
86580180	86598104	89824050
86579699	86598104	89824051
86579700	86598105	89824051

CX880 COMBINE - BASE UNIT (2/01-)

07.502(03) HYDRAULIC FITTINGS, ANGULAR

ссылка	Номер детали	Кол-во	Описание
1	84431522	AR	ELBOW, 90є, 9/16"-18 ORFS x M12 x 1.5 ORB,
1	84432241	AR	ELBOW, 90є, 9/16"-18 ORFS x M14 x 1.5 ORB,
1	86580178	AR	ELBOW, 90є, 11/16"-18 ORFS x M12 x 1.5 ORB,
1	86579686	AR	ELBOW, 90є, 11/16"-18 ORFS x M14 x 1.5 ORB,
1	86579687	AR	
1	86579688	AR	ELBOW, 90є, 11/16"-18 ORFS x M18 x 1.5 ORB,
1	86579689	AR	ELBOW, 90є, 13/16"-18 ORFS x M14 x 1.5 ORB,
1	86579690	AR	ELBOW, 90є, 13/16"-18 ORFS x M16 x 1.5 ORB,
1	86579691	AR	ELBOW, 90є, 13/16"-18 ORFS x M18 x 1.5 ORB,
1	86579692	AR	ELBOW, 90є, 13/16"-18 ORFS x M22 x 1.5 ORB,
1	86579693	AR	ELBOW, 90є, 1"-14 ORFS x M18 x 1.5 ORB,
1	86579694	AR	ELBOW, 90є, 1"-14 ORFS x M22 x 1.5 ORB,
1	86579695	AR	ELBOW, 90є, 1 3/16"-12 ORFS x M22 x 1.5 ORB,
1	84100209	AR	CONNECTOR, HYD.,
1	86579697	AR	ELBOW, 90є, 1 3/16"-12 ORFS x M27 x 2 ORB,
1	86579698	AR	CONNECTOR, HYD.,
1	86580180	AR	ELBOW, 90є, 1 7/16"-12 ORFS x M33 x 2 ORB,
1	86579699	AR	
1	86579700	AR	ELBOW, 90є, 1 11/16"-12 ORFS x M42 x 2 ORB,
2	86598098	AR	O-RING, Cl 6, 9.3MM ID x 2.2 Thk,
2	86598099	AR	O-RING, Cl 6, 11.3MM ID x 2.2 Thk,
2	86598100	AR	O-RING, Cl 6, 13.3MM ID x 2.2 Thk,
2	86598101	AR	O-RING, Cl 6, 15.3MM ID x 2.2 Thk,
2	86598102	AR	O-RING, Cl 6, 19.3MM ID x 2.2 Thk,
2	86598103	AR	O-RING, Cl 6, 23.6MM ID x 2.9 Thk,
2	86598104	AR	O-RING, Cl 6, 26.6MM ID x 2.9 Thk,
2	86598105	AR	O-RING, Cl 6, 38.6MM ID x 2.9 Thk,
3	9825770	AR	O-RING, -011, 90 Duro, .301" ID x .070" Thk,
3	9992069	AR	O-RING, -016, 90 Duro, .614" ID x .070" Thk,
3	9991976	AR	O-RING, -018, 90 Duro, .739" ID x .070" Thk,
3	9824050	AR	O-RING, -021, 90 Duro, .926" ID x .070" Thk,
3	9824051	AR	O-RING, -025, 90 Duro, 1.176" ID x .070" Thk,
3	9993141	AR	O-RING, -012, 90 Duro, .364" ID x .070" Thk,
3	9992298	AR	O-RING, -014, 90 Duro, .489" ID x .070" Thk,

07.502(04) HYDRAULIC FITTINGS, ANGULAR

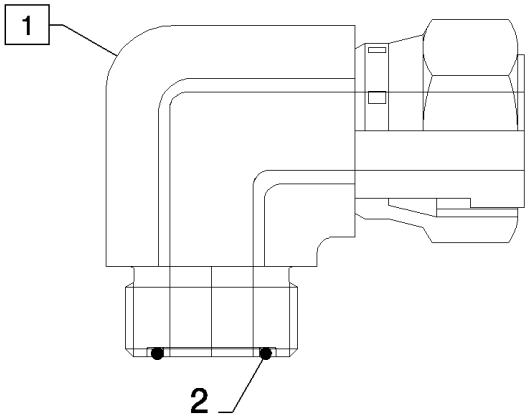

Ref. 1	Ref. 2
84989411	89825770
84989392	89993141
84989383	89992298
84989393	89992069
84989412	89991976
84989413	89824050
84989414	89824051

CX880 COMBINE - BASE UNIT (2/01-)

07.502(04) HYDRAULIC FITTINGS, ANGULAR

ссылка	Номер детали	Кол-во	Описание
1	84989411	AR	ELBOW, 90є, 9/16"-18 ORFS x 9/16"-18 Fem Sw,
1	84989392	AR	ELBOW, 90є, 11/16"-16 ORFS x 11/16"-16 Fem Sw,
1	84989383	AR	ELBOW, 90є, 13/16"-16 ORFS x 13/16"-16 Fem Sw,
1	84989393	AR	ELBOW, 90є, 1"-14 ORFS x 1"-14 Fem Sw,
1	84989412	AR	ELBOW, 90є, 1 3/16"-12 ORFS x 1 3/16"-12 Fem Sw,
1	84989413	AR	ELBOW, 90є, 1 7/16"-12 ORFS x 1 7/16"-12 Fem Sw,
1	84989414	AR	
2	9825770	AR	O-RING, -011, 90 Duro, .301" ID x .070" Thk,
2	9992069	AR	O-RING, -016, 90 Duro, .614" ID x .070" Thk,
2	9991976	AR	O-RING, -018, 90 Duro, .739" ID x .070" Thk,
2	9824050	AR	O-RING, -021, 90 Duro, .926" ID x .070" Thk,
2	9824051	AR	O-RING, -025, 90 Duro, 1.176" ID x .070" Thk,
2	9993141	AR	O-RING, -012, 90 Duro, .364" ID x .070" Thk,
2	9992298	AR	O-RING, -014, 90 Duro, .489" ID x .070" Thk,

07.502(05) HYDRAULIC FITTINGS, T

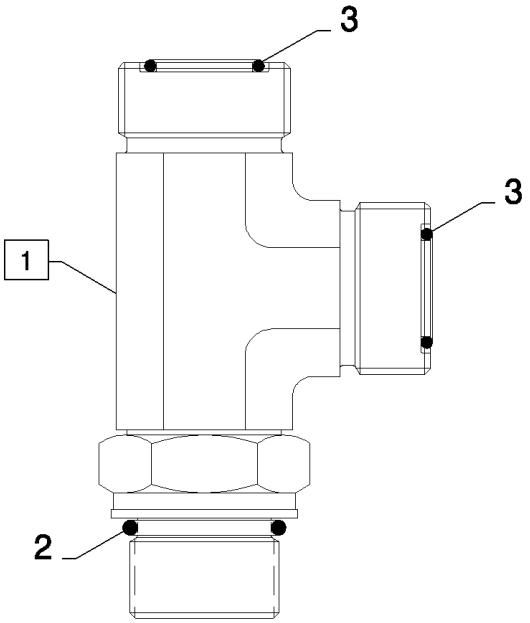

Ref. 1	Ref. 2	Ref. 3
86579701	86598100	89993141
86597759	86598101	89993141
86579702	86598101	89992298
86579705	86598102	89992069
86579706	86598103	89991976
86579707	86598104	89824050
86579708	86598105	89824051

CX880 COMBINE - BASE UNIT (2/01-)

07.502(05) HYDRAULIC FITTINGS, T

ссылка	Номер детали	Кол-во	Описание
1	86579701	AR	TEE, 11/16"-16 ORFS x M16 x 1.5 ORB Run,
1	86597759	AR	TEE, 13/16"-16 ORFS x M18 x 1.5 ORB Run,
1	86579702	AR	TEE, 13/16"-16 ORFS x M18 x 1.5 ORB Run,
1	86579705	AR	TEE, 1"-14 ORFS x M22 x 1.5 ORB Run,
1	86579706	AR	TEE, 1 3/16"-12 ORFS x M27 x 2 ORB Run,
1	86579707	AR	TEE, 1 7/16"-12 ORFS x M33 x 2 ORB Run,
1	86579708	AR	TEE, 1 11/16"-12 ORFS x M42 x 2 ORB Run,
2	86598100	AR	O-RING, Cl 6, 13.3MM ID x 2.2 Thk,
2	86598101	AR	O-RING, Cl 6, 15.3MM ID x 2.2 Thk,
2	86598102	AR	O-RING, Cl 6, 19.3MM ID x 2.2 Thk,
2	86598103	AR	O-RING, Cl 6, 23.6MM ID x 2.9 Thk,
2	86598104	AR	O-RING, Cl 6, 26.6MM ID x 2.9 Thk,
2	86598105	AR	O-RING, Cl 6, 38.6MM ID x 2.9 Thk,
3	9992069	AR	O-RING, -016, 90 Duro, .614" ID x .070" Thk,
3	9991976	AR	O-RING, -018, 90 Duro, .739" ID x .070" Thk,
3	9824050	AR	O-RING, -021, 90 Duro, .926" ID x .070" Thk,
3	9824051	AR	O-RING, -025, 90 Duro, 1.176" ID x .070" Thk,
3	9993141	AR	O-RING, -012, 90 Duro, .364" ID x .070" Thk,
3	9992298	AR	O-RING, -014, 90 Duro, .489" ID x .070" Thk,

07.502(06) HYDRAULIC FITTINGS, PLUG

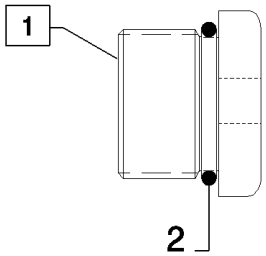

Ref. 1	Ref. 2
86598043	86598098
86598044	86598099
86598045	86598100
86598046	86598101
86598047	86598102
86598048	86598103
86583482	86598104
86583483	86598105

CX880 COMBINE - BASE UNIT (2/01-)

07.502(06) HYDRAULIC FITTINGS, PLUG

ссылка	Номер детали	Кол-во	Описание
1	86598043	AR	PLUG, Hex Soc, M12 x 1.5, ORB,
1	86598044	AR	PLUG, Hex Soc, M14 x 1.5, ORB,
1	86598045	AR	PLUG, Hex Soc, M16 x 1.5, ORB,
1	86598046	AR	PLUG, Hex Soc, M18 x 1.5, ORB,
1	86598047	AR	PLUG, Hex Soc, M22 x 1.5, ORB,
1	86598048	AR	PLUG, Hex Soc, M27 x 2, ORB,
1	86583482	AR	PLUG,
1	86583483	AR	
2	86598098	AR	O-RING, Cl 6, 9.3MM ID x 2.2 Thk,
2	86598099	AR	O-RING, Cl 6, 11.3MM ID x 2.2 Thk,
2	86598100	AR	O-RING, Cl 6, 13.3MM ID x 2.2 Thk,
2	86598101	AR	O-RING, Cl 6, 15.3MM ID x 2.2 Thk,
2	86598102	AR	O-RING, Cl 6, 19.3MM ID x 2.2 Thk,
2	86598103	AR	O-RING, Cl 6, 23.6MM ID x 2.9 Thk,
2	86598104	AR	O-RING, Cl 6, 26.6MM ID x 2.9 Thk,
2	86598105	AR	O-RING, Cl 6, 38.6MM ID x 2.9 Thk,

SHEET METAL/DECALS	REVÊTEMENTS EN TÔLE DÉCALCOMANIE	CHAPEADOS/CALCOMANÍAS	METALPLADEBEKLÆDN. MÆRKATER
LAMIERATI DECALCOMANIE	BLECHVERKLEIDUNGEN ABZIEHBILDER	REVESTIMENTOS EM CHAPAS/DECALCOMANIAS	METALEN PLATEN PLAKPLAATJES

SEC. 8

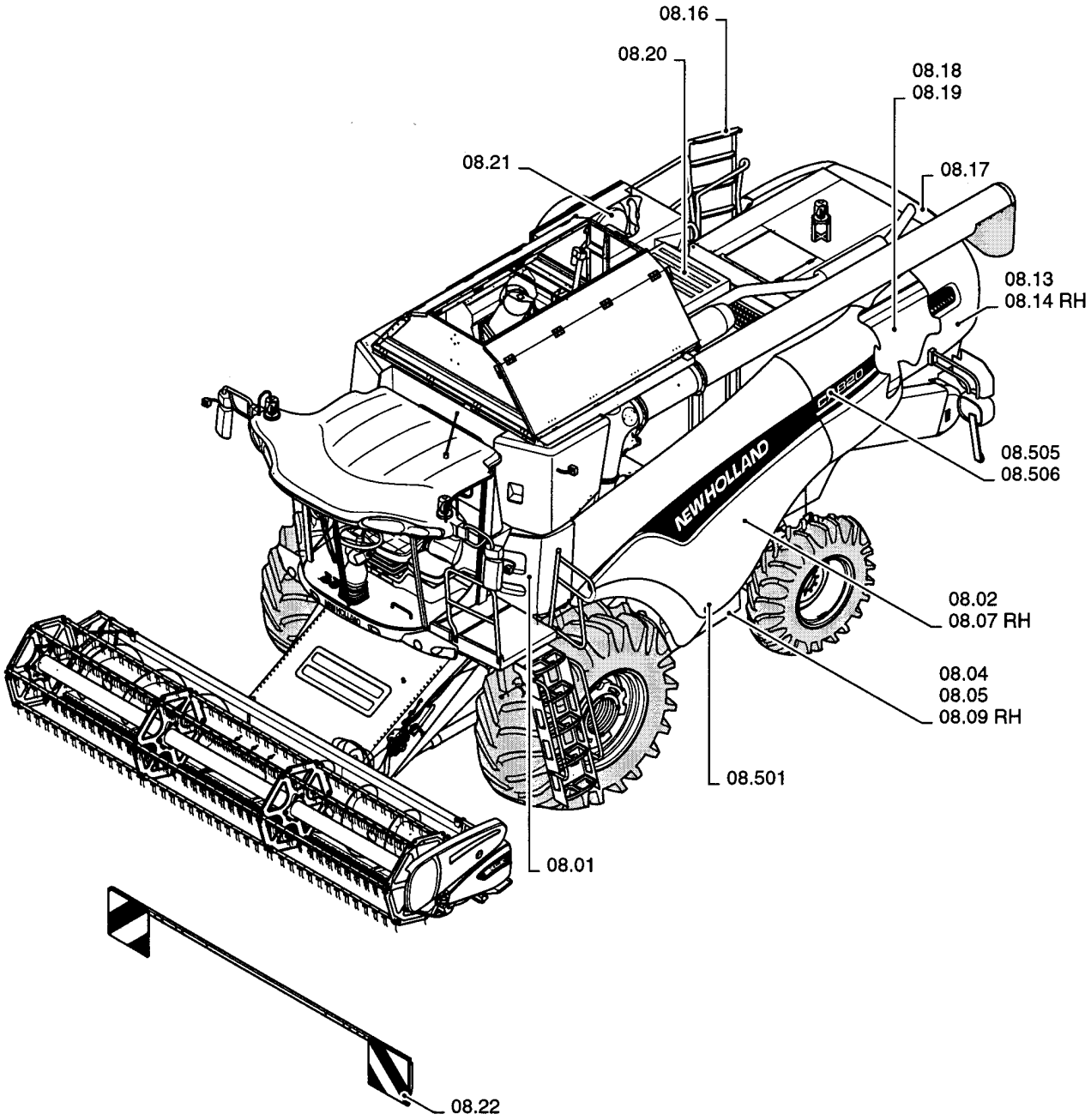

ссылка	Номер детали	Кол-во	Описание

08.01(01) FRONT SHIELDS

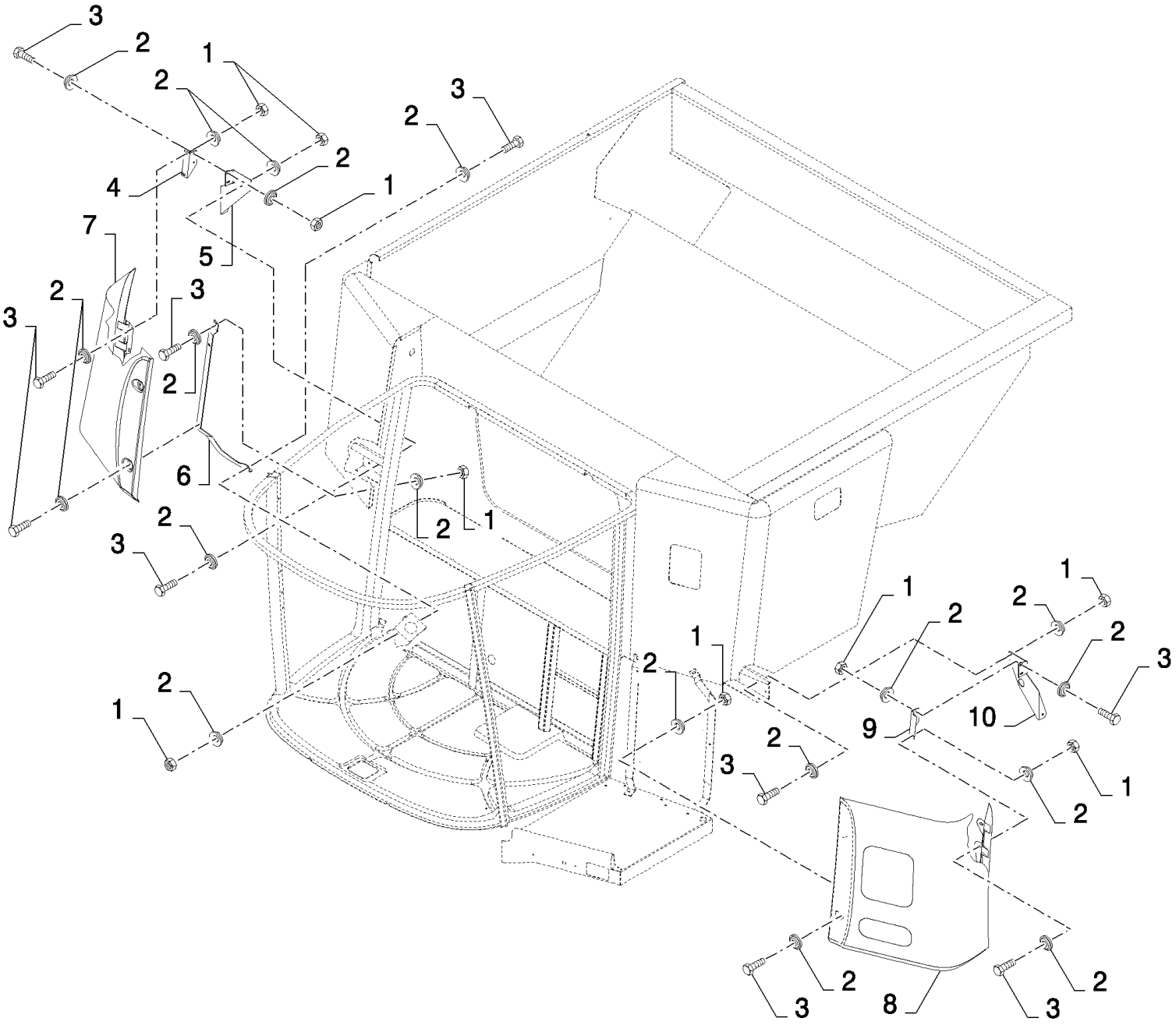

CX880 COMBINE - BASE UNIT (2/01-)

08.01(01) FRONT SHIELDS

ссылка	Номер детали	Кол-во	Описание
1	89706690	18	NUT, M8, Cl 8,
2	412650	36	WASHER, Belleville, M8,
3	120104	18	SCREW, Hex, M8 x 20, 8.8,
4	86597432	1	SUPPORT,
5	84320773	1	SUPPORT,
6	86598256	1	SUPPORT, , BSN C301
6	84444317	1	SUPPORT, , ASN D302
7	86579769	1	GUARD, , FOR CX820, CX840, CX860, CX880 ONLY, FOR 3.3 M VERSION ONLY
7	86583312	1	GUARD,
8	86579768	1	GUARD, , FOR 3.3 M VERSION ONLY, FOR CX820, CX840, CX860, CX880 ONLY
8	86583311	1	GUARD,
9	86597431	1	SUPPORT,
10	84320775	1	SUPPORT,

08.02(01) UPPER SHIELDS, LH

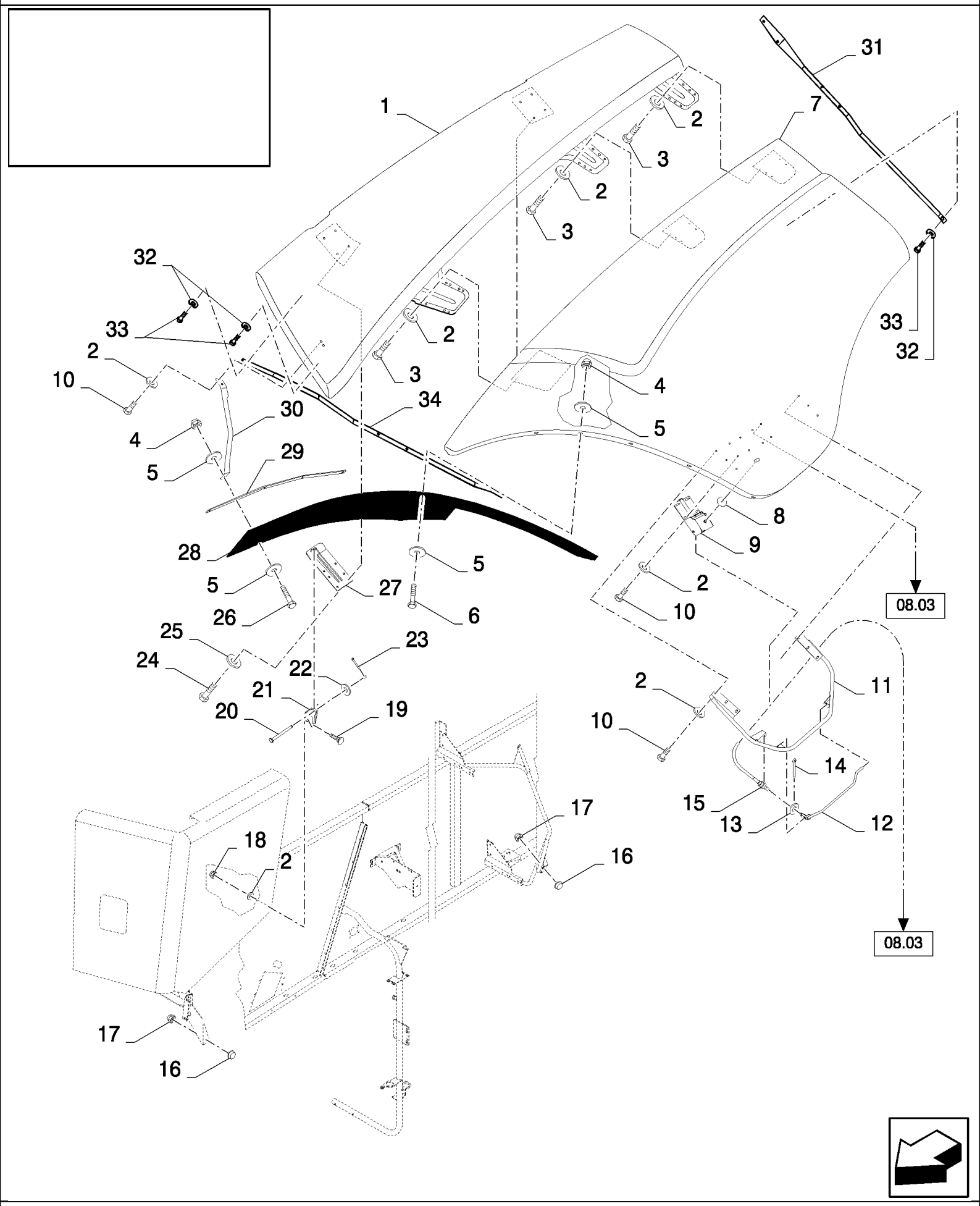

CX880 COMBINE - BASE UNIT (2/01-)

08.02(01) UPPER SHIELDS, LH

ссылка	Номер детали	Кол-во	Описание
1	86579773	1	GUARD,
2	412650	AR	WASHER, Belleville, M8,
3	120104	AR	SCREW, Hex, M8 x 20, 8.8,
4	86629542	AR	NUT, LOCK, M8 x 1.25, Cl 8,
5	140041	AR	WASHER, M8 x 28 x 3,
6	43127	AR	BOLT, Hex, M8 x 25, 8.8,
7	86576610	1	GUARD,
8	86623007	1	GASKET, , BSN C439
9	86596931	1	LATCH, , SEE FIG 08.11, BSN C439
9	86623939	1	LATCH ASSY., , SEE FIG 08.11, ASN D440
9	86596940	1	LATCH, , FOR 3 M VERSION OF CX820, CX840, CX860 ONLY, SEE FIG 08.12, BSN C439
9	86623938	1	LATCH, , SEE FIG 08.12, FOR 3 M VERSION OF CX820, CX840, CX860 ONLY, ASN D440
10	16043224	AR	BOLT, Hex, M8 x 16, 8.8, Full Thd,
11	86582750	1	HANDLE,
12	86623031	1	ROD,
13	378243	1	WASHER, M8,
14	9512667	1	PIN, SPLIT (COTTER), M2 x 20,
15	86623145	1	CABLE, FLEXIBLE,
16	190029	2	INSULATOR BLOCK, , BSN C319
16	84440416	2	INSULATOR BLOCK, , ASN D320
17	100016	2	NUT, M10, Cl 8,
18	89706690	3	NUT, M8, Cl 8,
19	86507486	3	BOLT, CARRIAGE, Short NK, M8 x 20, Cl8.8, Full Thd,
20	412027	1	PIN, CLEVIS, M12 x 45,
21	84320769	1	SUPPORT,
22	378245	1	WASHER, M12,
23	130003	1	PIN, SPLIT (COTTER), M3.2 x 20,
24	43138	4	SCREW, Hex, M10 x 20, 8.8, Full Thd,
25	140045	4	WASHER, SPRING, Belleville, M10,
26	412479	5	BOLT, Hex, M8 x 35, 8.8,
27	86597487	1	SUPPORT,
28	86595814	1	FENDER, FRONT,
28	86595842	1	FENDER, FRONT, , FOR 3 M VERSION OF CX820, CX840, CX860 ONLY
29	86583306	1	PLATE, FIXING,
30	86583308	1	SUPPORT, , BSN C359
30	87011730	1	SUPPORT, , ASN D360
31	84449618	1	SUPPORT, , ASN D360
32	412650	AR	WASHER, Belleville, M8, , ASN D360
33	43127	AR	BOLT, Hex, M8 x 25, 8.8, , ASN D360
34	84449620	1	SUPPORT, , ASN D360

08.03(01) UPPER SHIELDS, LH

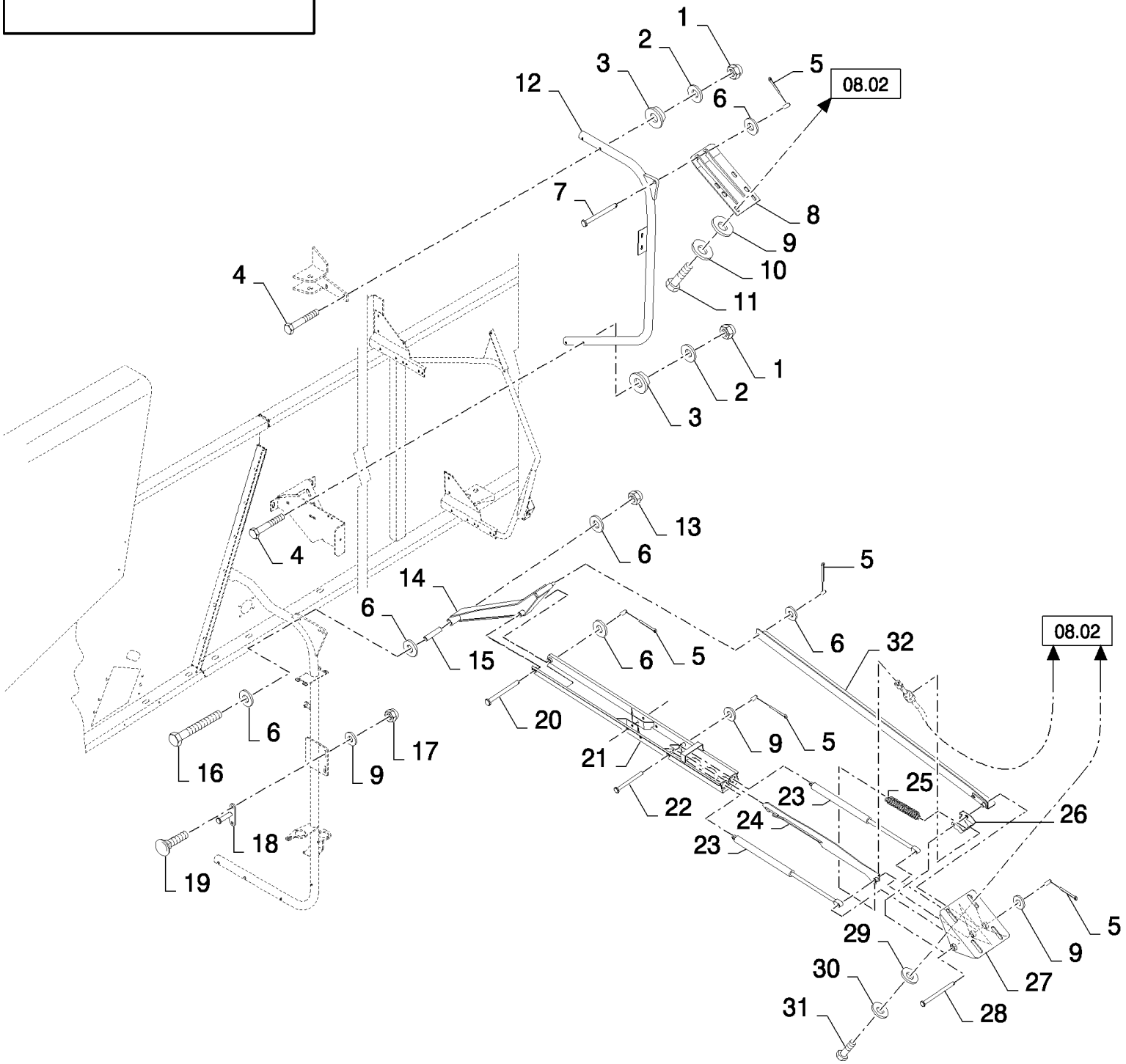

CX880 COMBINE - BASE UNIT (2/01-)

08.03(01) UPPER SHIELDS, LH

ссылка	Номер детали	Кол-во	Описание
1	86629542	4	NUT, LOCK, M8 x 1.25, Cl 8,
2	412650	4	WASHER, Belleville, M8,
3	333962	4	CLAMP,
4	120061	4	BOLT, Hex, M8 x 60, 8.8,
5	130003	6	PIN, SPLIT (COTTER), M3.2 x 20,
6	378245	6	WASHER, M12,
7	412118	1	PIN, CLEVIS, M12 x 65,
8	84320770	1	SUPPORT,
9	378244	9	WASHER, M10,
10	140045	4	WASHER, SPRING, Belleville, M10,
11	43138	4	SCREW, Hex, M10 x 20, 8.8, Full Thd,
12	86583218	1	TUBE, , BSN C491
12	87371466	1	, ASN D492
13	100038	1	NUT, M12 x 1.75, Cl 8,
14	86582796	1	ARM, , BSN C423
14	84459999	1	LEVER, , ASN D424
15	86582804	1	BUSHING,
16	86562594	1	BOLT, Hex, M12 x 110, 8.8,
17	100037	2	NUT, M10 x 1.5, Cl 8,
18	86583214	1	SUPPORT,
19	338949	2	BOLT, CARRIAGE, Short NK, M10 x 25, Cl8.8, Full Thd,
20	412046	1	PIN, CLEVIS, M12 x 110,
21	86623181	1	CHANNEL,
22	86605625	2	PIN, CLEVIS, M10 x 110,
23	84320282	2	SHOCK ABSORBER,
24	86623171	1	REINFORCEMENT,
25	217465	1	SPRING,
26	84439967	1	SUPPORT,
27	86623165	1	SUPPORT,
28	86605626	1	PIN, CLEVIS, M10 x 150,
29	412650	4	WASHER, Belleville, M8,
30	378243	4	WASHER, M8,
32	86623162	1	ARM,
31	16043224	4	BOLT, Hex, M8 x 16, 8.8, Full Thd,

08.04(01) LOWER SHIELDS, LH

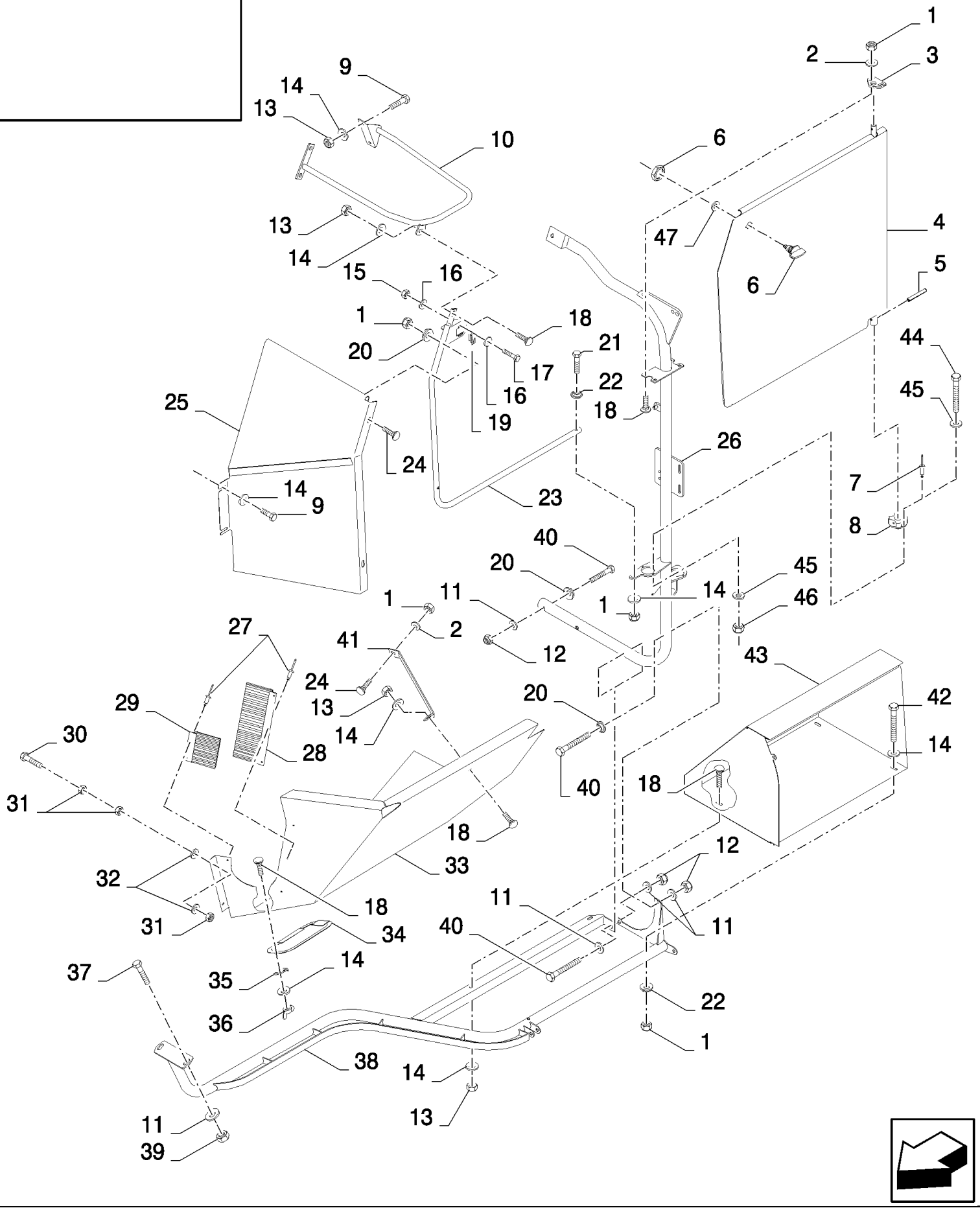

CX880 COMBINE - BASE UNIT (2/01-)

08.04(01) LOWER SHIELDS, LH

ссылка	Номер детали	Кол-во	Описание
1	86629542	8	NUT, LOCK, M8 x 1.25, Cl 8, , BSN C237
1	86629542	7	NUT, LOCK, M8 x 1.25, Cl 8, , ASN D238
2	140016	3	WASHER, M8 x 16 x 1.6, , BSN C237
2	412650	3	WASHER, Belleville, M8, , ASN D238
3	86583069	1	BRACKET, , BSN C359
3	87031132	1	BRACKET, , ASN D360
4	86583029	1	DOOR, , BSN C237
4	86623781	1	DOOR, , BSN F238439
4	84453912	1	DOOR, , ASN D440
5	9503517	1	PIN, , BSN C237
5	381928	1	PIN, LOCK, M10 x 50, Slotted, , ASN D238
6	9705390	1	LATCH,
7	NS	2	NOT SERVICED, , BSN C359
8	921928	1	BUSHING, , BSN C237
8	86623764	1	BUSHING, , BSN F238359
8	87032966	1	BUSHING, , ASN D360
9	120104	4	SCREW, Hex, M8 x 20, 8.8,
10	86596366	1	SUPPORT, , BSN C439
11	140045	6	WASHER, SPRING, Belleville, M10,
12	100037	4	NUT, M10 x 1.5, Cl 8,
13	89706690	6	NUT, M8, Cl 8,
14	322358	12	WASHER, SPRING, Belleville, M8, , BSN C237
14	412650	16	WASHER, Belleville, M8, , ASN D238
15	100012	2	NUT, M4, Cl 8,
16	322355	4	WASHER, Belleville, M4,
17	385683	2	BOLT, Hex, M4 x 10, 8.8, Full Thd,
18	86507486	7	BOLT, CARRIAGE, Short NK, M8 x 20, Cl8.8, Full Thd,
19	9840986	1	CLIP,
20	379401	5	CLAMP,
21	43129	1	BOLT, Hex, M8 x 40, 8.8,
22	333962	3	CLAMP,
23	86583048	1	SUPPORT, , BSN C439
23	84454046	1	SUPPORT, , ASN D440
24	43465	3	BOLT, CARRIAGE, Short NK, M8 x 30, Cl8.8, Full Thd,
25	86581744	1	GUARD, , BSN C439
25	84454514	1	SHIELD, , ASN D440
26	86583052	1	SUPPORT, , BSN C309
26	86974792	1	SUPPORT, , BSN F310359
26	87031080	1	TUBE, , ASN D360
27	NS	5	NOT SERVICED,
28	86583384	1	BRUSH, , BSN C439
29	86583383	1	BRUSH, , BSN C439
30	86977786	7	BOLT, Hex, M6 x 25, 8.8,
31	15896221	21	NUT, M6, Cl 10,

08.04(01) LOWER SHIELDS, LH

ссылка	Номер детали	Кол-во	Описание
32	322357	14	WASHER, SPRING, Belleville, M6, , BSN C237
32	412649	14	WASHER, SPRING, Belleville, M6, , ASN D238
33	86581742	1	GUARD, , BSN C315
33	87011189	1	GUARD, , BSN F316439
33	84459370	1	SHIELD, , FOR SELF LEVELLING ONLY, ASN D440
33	84454451	1	SHIELD, , FOR FIXED SHOE ONLY, ASN D440
34	916303	1	COVER, , BSN C439
35	425093	1	CLIP, , BSN C439
36	84807781	1	NUT, WING, M8, , BSN C439
37	43140	2	BOLT, Hex, M10 x 30, 8.8, Full Thd,
38	86581750	1	PLATE, STEP, , BSN C439
38	84453538	1	PLATE, STEP, , ASN D440
39	100016	2	NUT, M10, Cl 8,
40	120070	4	BOLT, Hex, M10 x 60, 8.8,
41	86581746	1	BRACKET, , FOR SELF LEVELLING ONLY
41	86610820	1	SUPPORT, , FOR FIXED SHOE ONLY
42	120061	2	BOLT, Hex, M8 x 60, 8.8, , BSN C237
42	43130	2	BOLT, Hex, M8 x 50, 8.8, , ASN D238
43	86581616	1	BOX,
44	86977789	2	SCREW, Hex, M6 x 35, 8.8, , ASN D360
45	86588450	4	WASHER, M6, , ASN D360
46	353308	2	NUT, M6 x 1, Cl 8, , ASN D360
47	20347	1	WASHER, LOCK, Int Tooth, 3/4", , ASN D360

08.05(01) LOWER SHIELDS, LH

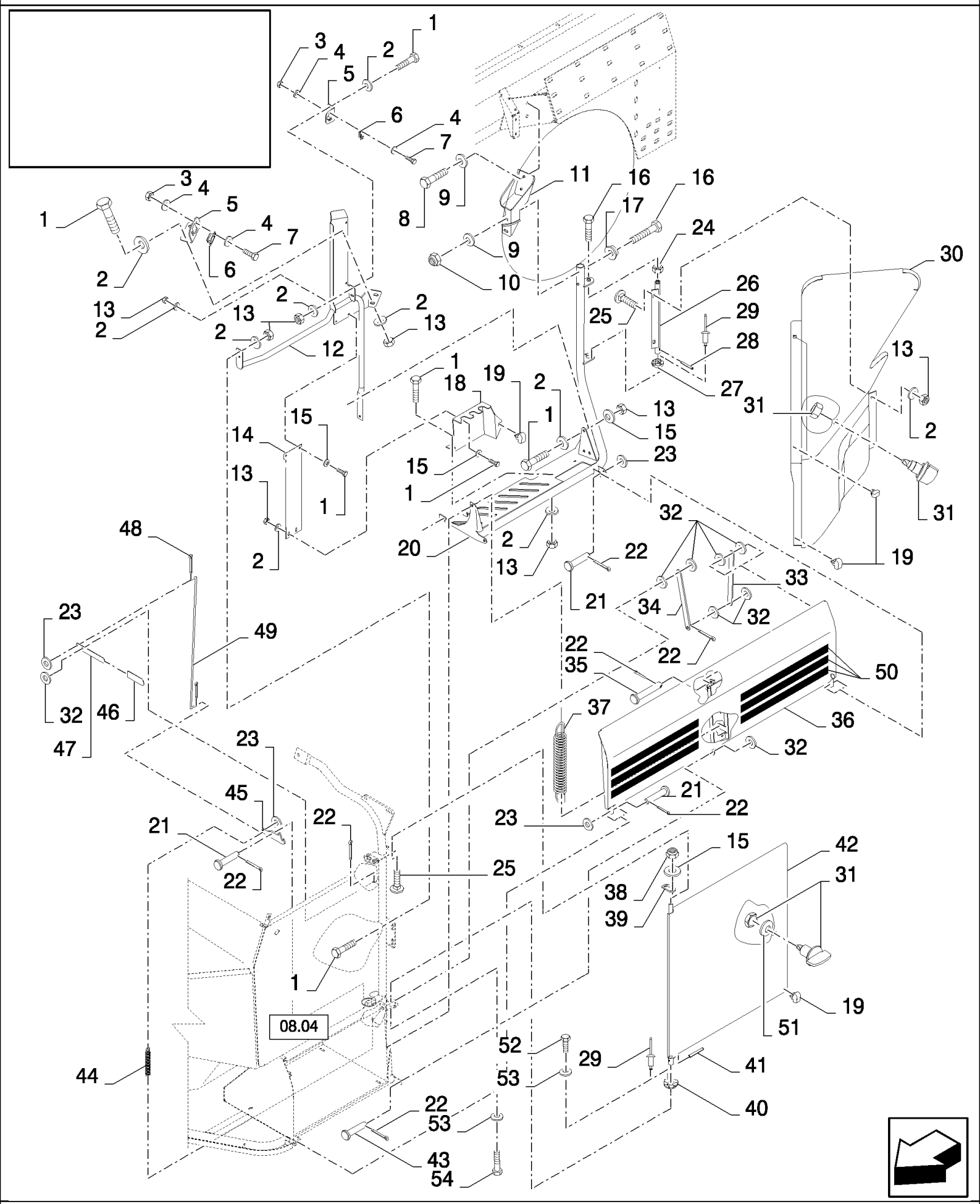

CX880 COMBINE - BASE UNIT (2/01-)

08.05(01) LOWER SHIELDS, LH

ссылка	Номер детали	Кол-во	Описание
1	120104	14	SCREW, Hex, M8 x 20, 8.8,
2	322358	18	WASHER, SPRING, Belleville, M8, , BSN C237
2	412650	AR	WASHER, Belleville, M8, , ASN D238
3	100012	4	NUT, M4, Cl 8,
4	322355	8	WASHER, Belleville, M4,
5	86583811	2	ANGLE,
6	9840986	2	CLIP,
7	385683	4	BOLT, Hex, M4 x 10, 8.8, Full Thd,
8	43138	2	SCREW, Hex, M10 x 20, 8.8, Full Thd, , BSN C237
8	43139	2	SCREW, Hex, M10 x 25, 8.8, Full Thd, M10x25, ASN D238
9	140045	4	WASHER, SPRING, Belleville, M10,
10	100037	2	NUT, M10 x 1.5, Cl 8,
11	86623051	1	SUPPORT, , FOR SELF LEVELLING ONLY, BSN C379
11	84452952	1	SUPPORT, , FOR SELF LEVELLING ONLY, ASN D380
12	86623006	1	SUPPORT, , FOR SELF LEVELLING ONLY, BSN C257
12	86638862	1	SUPPORT, , FOR SELF LEVELLING ONLY, ASN D258
12	86638862	1	SUPPORT, , FOR FIXED SHOE ONLY
13	89706690	15	NUT, M8, Cl 8,
14	86596760	1	GUARD, , BSN C257
15	140016	7	WASHER, M8 x 16 x 1.6, , BSN C237
15	412650	7	WASHER, Belleville, M8, , ASN D238
16	120070	3	BOLT, Hex, M10 x 60, 8.8,
17	379401	2	CLAMP,
18	86596997	1	BRACKET, , BSN C257
19	128104	AR	BUMPER,
20	86623004	1	PLATE, STEP, , BSN C309
20	86974790	1	PLATE, STEP, , BSN F310359
20	87031084	1	TUBE,
21	345785	3	PIN, CLEVIS, M10 x 45,
22	130003	6	PIN, SPLIT (COTTER), M3.2 x 20,
23	86588450	2	WASHER, M6,
24	100016	1	NUT, M10, Cl 8,
25	43465	4	BOLT, CARRIAGE, Short NK, M8 x 30, Cl8.8, Full Thd,
26	86596738	1	TUBE,
27	86596735	1	BUSHING, , BSN C237
27	86623764	1	BUSHING, , ASN D238
28	381928	1	PIN, LOCK, M10 x 50, Slotted,
29	NS	4	NOT SERVICED, , BSN C359
30	86596753	1	GUARD, , BSN C439
30	84454156	1	SHIELD, , ASN D440
31	9705390	2	LATCH,
32	140017	10	WASHER, M10 x 20 x 2,
33	86583010	1	LINK/SHACKLE,
34	86582242	1	LINK/SHACKLE,

08.05(01) LOWER SHIELDS, LH

ссылка	Номер детали	Кол-во	Описание
35	379547	1	PIN, CLEVIS, M10 x 60,
36	86599629	1	DOOR, , BSN C439
36	84459849	1	DOOR, , BSN F440495
36	86599629	1	DOOR, , ASN D496
37	86559592	1	SPRING, , BSN C439
37	86559592	1	SPRING, , ASN D496
38	86629542	2	NUT, LOCK, M8 x 1.25, Cl 8, , BSN C237
38	86629542	2	NUT, LOCK, M8 x 1.25, Cl 8, , ASN D238
39	86583069	1	BRACKET, , BSN C359
39	87031132	1	BRACKET, , ASN D360
40	921928	1	BUSHING, , BSN C237
40	86623764	1	BUSHING, , BSN F238359
40	87032966	1	BUSHING,
41	9503517	1	PIN, , BSN C237
41	120069	1	SCREW, Hex, M10 x 50, 8.8, , ASN D238
42	86581870	1	DOOR, , BSN C237
42	86623783	1	SHIELD, , BSN F238439
42	84454331	1	SHIELD, , ASN D440
43	358885	1	PIN, CLEVIS, M10 x 25, , BSN C439
43	358885	1	PIN, CLEVIS, M10 x 25, , ASN D496
44	12255	1	SPRING,
45	86583021	1	LATCH,
46	703018	1	HANDLE GRIP,
47	86583024	1	LEVER,
48	9512667	2	PIN, SPLIT (COTTER), M2 x 20,
49	86583022	1	ROD,
50	401502	AR	STRIP, ANTI-SKID, 51mm x 18.3 Roll - Cut to Size
51	20347	1	WASHER, LOCK, Int Tooth, 3/4", , ASN D360
52	86977789	2	SCREW, Hex, M6 x 35, 8.8, , ASN D360
53	86588450	4	WASHER, M6, , ASN D360
54	353308	2	NUT, M6 x 1, Cl 8, , ASN D360

08.06(01) LOWER SHIELDS WITH TRACKS, LH - NOT FOR NA

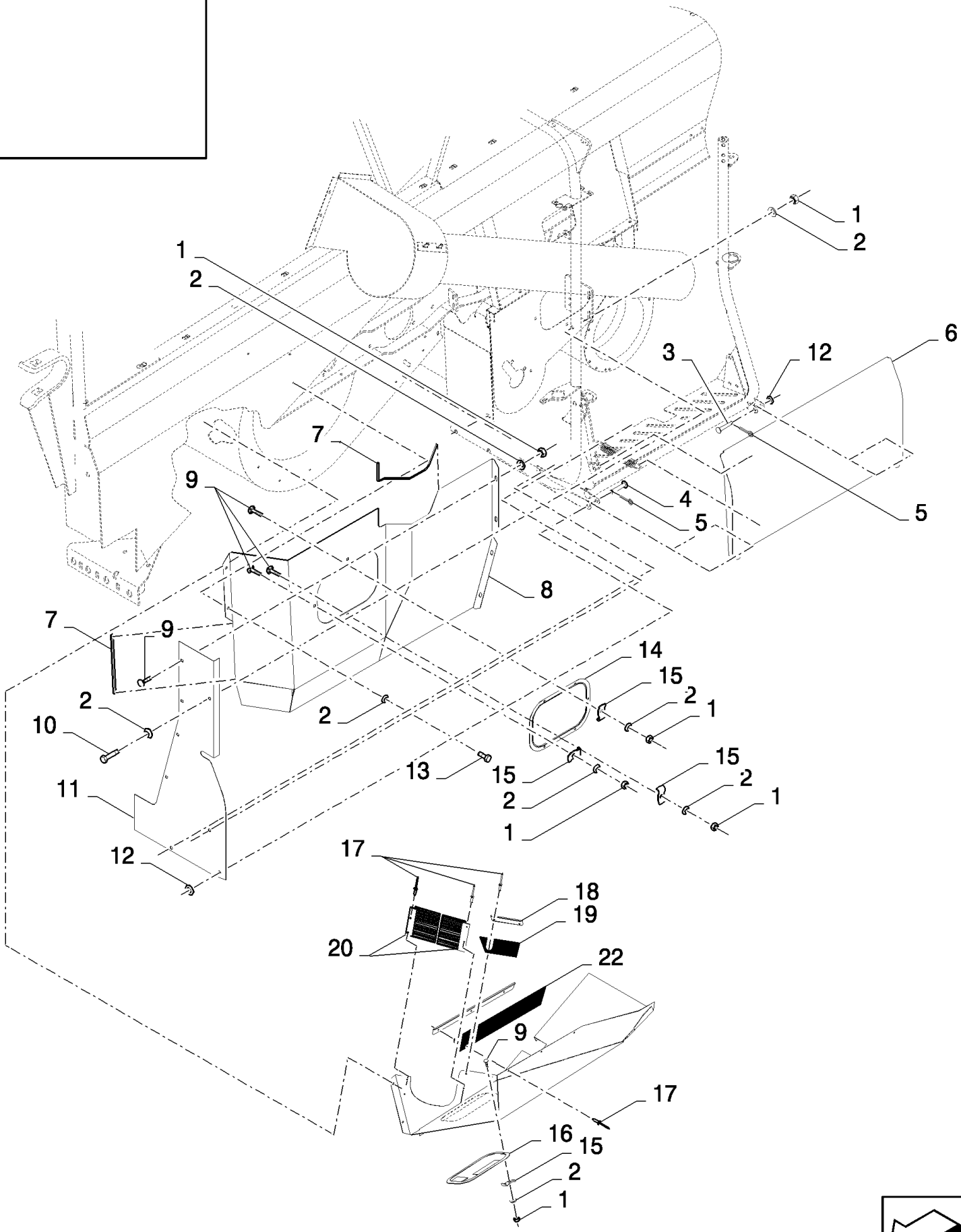

CX880 COMBINE - BASE UNIT (2/01-)

08.06(01) LOWER SHIELDS WITH TRACKS, LH - NOT FOR NA

ссылка	Номер детали	Кол-во	Описание
1	89706690	8	NUT, M8, Cl 8,
2	322358	12	WASHER, SPRING, Belleville, M8,
3	345785	1	PIN, CLEVIS, M10 x 45,
4	336793	1	PIN, CLEVIS, M10 x 55,
5	130003	2	PIN, SPLIT (COTTER), M3.2 x 20,
6	84440354	1	DOOR,
7	80401310	AR	PROFILE,
8	84440459	1	SHIELD,
9	86507486	8	BOLT, CARRIAGE, Short NK, M8 x 20, Cl8.8, Full Thd,
10	386045	1	BOLT, Hex, M8 x 45, 8.8,
11	84440921	1	PLATE,
12	140017	2	WASHER, M10 x 20 x 2,
13	120104	2	SCREW, Hex, M8 x 20, 8.8,
14	84320078	1	COVER,
15	425093	4	CLIP,
16	916303	1	COVER,
17	NS	9	NOT SERVICED,
18	84441428	1	PLATE,
19	84441423	1	CANVAS,
20	86583383	2	BRUSH,
21	84441426	1	PLATE,
22	84441422	1	CANVAS,
23	84440449	1	SHIELD,

08.07(01) UPPER SHIELDS, RH

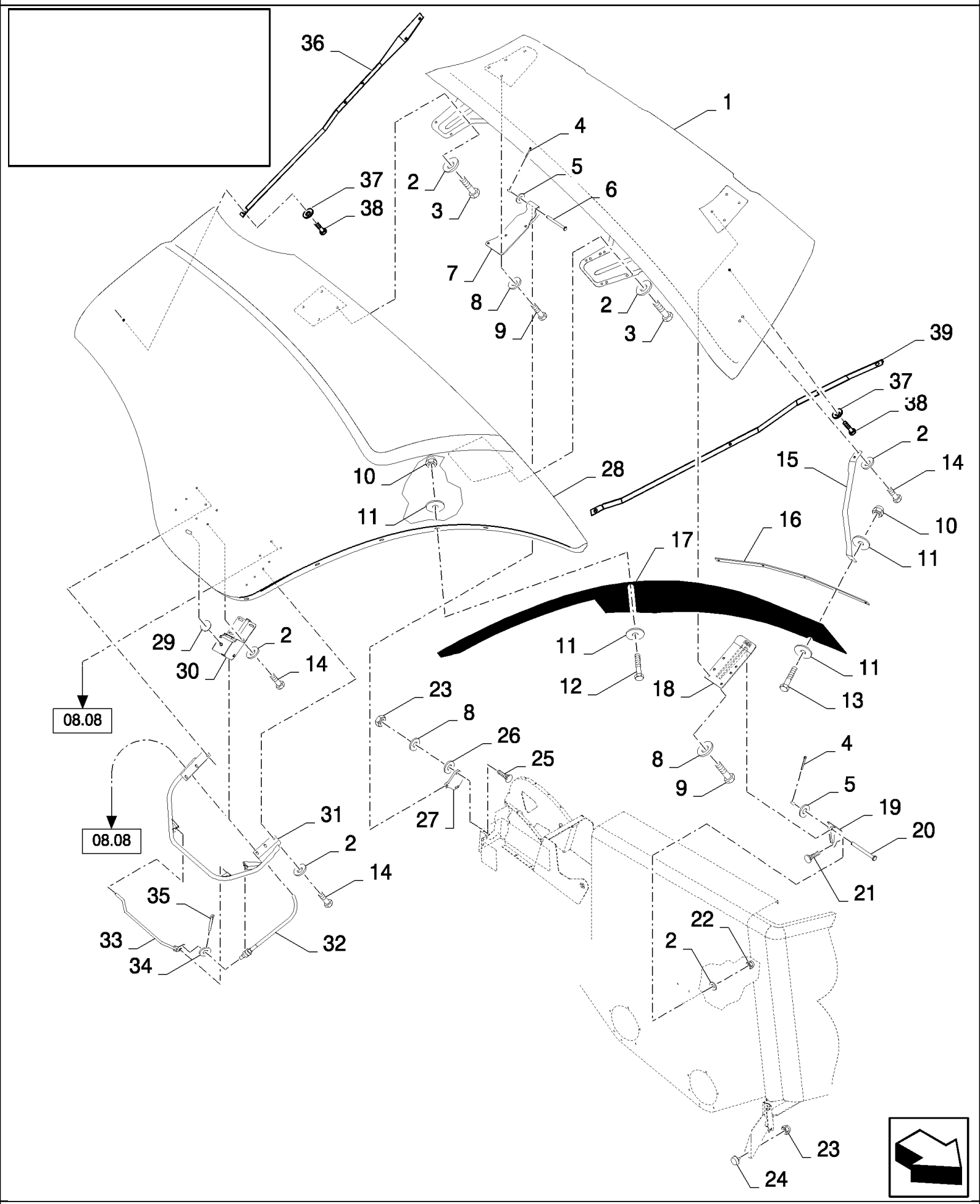

CX880 COMBINE - BASE UNIT (2/01-)

08.07(01) UPPER SHIELDS, RH

ссылка	Номер детали	Кол-во	Описание
1	86583315	1	GUARD,
2	412650	AR	WASHER, Belleville, M8,
3	120104	8	SCREW, Hex, M8 x 20, 8.8,
4	130003	2	PIN, SPLIT (COTTER), M3.2 x 20,
5	378245	2	WASHER, M12,
6	412118	1	PIN, CLEVIS, M12 x 65,
7	84320785	1	SUPPORT, , BSN C319
7	87011517	1	SUPPORT, , ASN D320
8	140045	11	WASHER, SPRING, Belleville, M10,
9	43138	8	SCREW, Hex, M10 x 20, 8.8, Full Thd,
10	86629542	12	NUT, LOCK, M8 x 1.25, Cl 8,
11	140041	24	WASHER, M8 x 28 x 3,
12	43127	7	BOLT, Hex, M8 x 25, 8.8,
13	412479	5	BOLT, Hex, M8 x 35, 8.8,
14	16043224	12	BOLT, Hex, M8 x 16, 8.8, Full Thd,
15	86596032	1	SUPPORT, , BSN C359
15	87011728	1	SUPPORT, , ASN D360
16	86583306	1	PLATE, FIXING,
17	86595814	1	FENDER, FRONT,
17	86595842	1	FENDER, FRONT, , FOR 3 M VERSION OF CX820, CX840, CX860 ONLY
18	86597487	1	SUPPORT,
19	84320769	1	SUPPORT,
20	412027	1	PIN, CLEVIS, M12 x 45,
21	86507486	3	BOLT, CARRIAGE, Short NK, M8 x 20, Cl8.8, Full Thd,
22	89706690	3	NUT, M8, Cl 8,
23	100016	4	NUT, M10, Cl 8,
24	190029	1	INSULATOR BLOCK, , BSN C319
24	84440416	1	INSULATOR BLOCK, , ASN D320
25	9833222	3	BOLT, CARRIAGE, Short NK, M10 x 35, Cl8.8, Full Thd,
26	86592700	3	WASHER, M10 x 28 x 4, HT, 10MM
27	86582126	1	PLATE,
27	86582124	1	PLATE, , FOR 3 M VERSION OF CX820, CX840, CX860 ONLY
28	86583257	1	GUARD,
29	86623007	1	GASKET, , BSN C439
30	86596931	1	LATCH, , SEE FIG 08.11, BSN C439
30	86623939	1	LATCH ASSY., , SEE FIG 08.11, ASN D440
31	84320777	1	HANDLE,
32	86623144	1	CABLE, FLEXIBLE,
33	86623041	1	ROD,
34	378243	1	WASHER, M8,
35	9512667	1	PIN, SPLIT (COTTER), M2 x 20,
36	84449656	1	SUPPORT, , ASN D360
37	412650	AR	WASHER, Belleville, M8, , ASN D360
38	43127	AR	BOLT, Hex, M8 x 25, 8.8, , ASN D360

CX880 COMBINE - BASE UNIT (2/01-)

08.07(01) UPPER SHIELDS, RH

ссылка	Номер детали	Кол-во	Описание
39	84449658	1	SUPPORT, , ASN D360

08.08(01) UPPER SHIELDS, RH

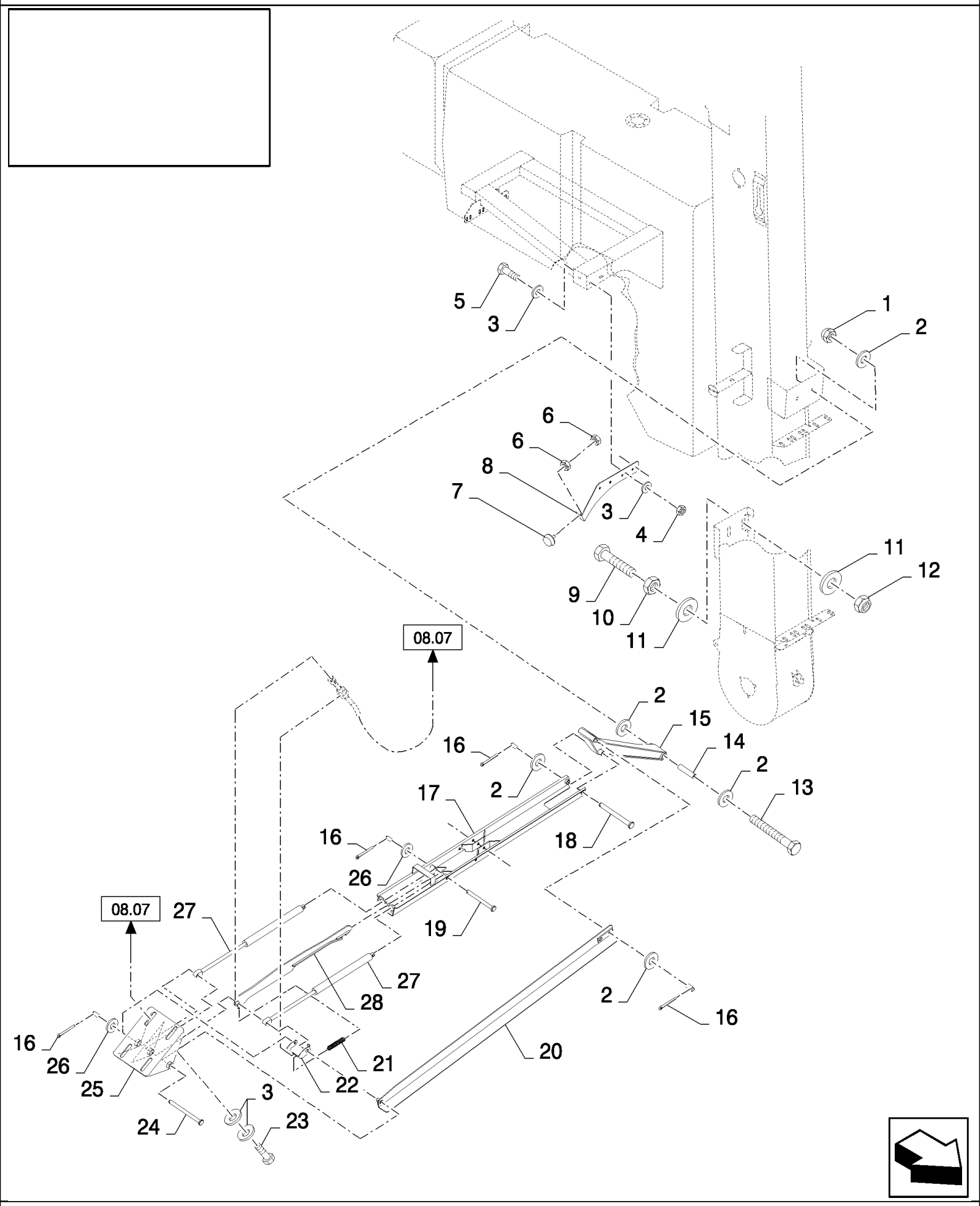

CX880 COMBINE - BASE UNIT (2/01-)

08.08(01) UPPER SHIELDS, RH

ссылка	Номер детали	Кол-во	Описание
1	100038	1	NUT, M12 x 1.75, Cl 8,
2	378245	5	WASHER, M12,
3	412650	8	WASHER, Belleville, M8,
4	89706690	2	NUT, M8, Cl 8,
5	43127	2	BOLT, Hex, M8 x 25, 8.8,
6	100016	2	NUT, M10, Cl 8,
7	190029	1	INSULATOR BLOCK,
8	86596085	1	SUPPORT,
9	350616	1	SCREW, Hex, M16 x 90, 8.8,
10	100020	1	NUT, M16, Cl 8,
11	140048	2	WASHER, SPRING, Belleville, M16,
12	86000441	1	NUT, M16 x 2, Cl 8,
13	86562594	1	BOLT, Hex, M12 x 110, 8.8,
14	86582804	1	BUSHING,
15	86582796	1	ARM, , BSN C423
15	84459999	1	LEVER, , ASN D424
16	130003	5	PIN, SPLIT (COTTER), M3.2 x 20,
17	86623181	1	CHANNEL,
18	412046	1	PIN, CLEVIS, M12 x 110,
19	86605625	2	PIN, CLEVIS, M10 x 110,
20	86623162	1	ARM,
21	217465	1	SPRING,
22	84439967	1	SUPPORT,
24	86605626	1	PIN, CLEVIS, M10 x 150,
25	86623165	1	SUPPORT,
26	378244	3	WASHER, M10,
27	84320282	2	SHOCK ABSORBER,
28	86623171	1	REINFORCEMENT,
23	16043224	4	BOLT, Hex, M8 x 16, 8.8, Full Thd,

08.09(01) LOWER SHIELDS, RH

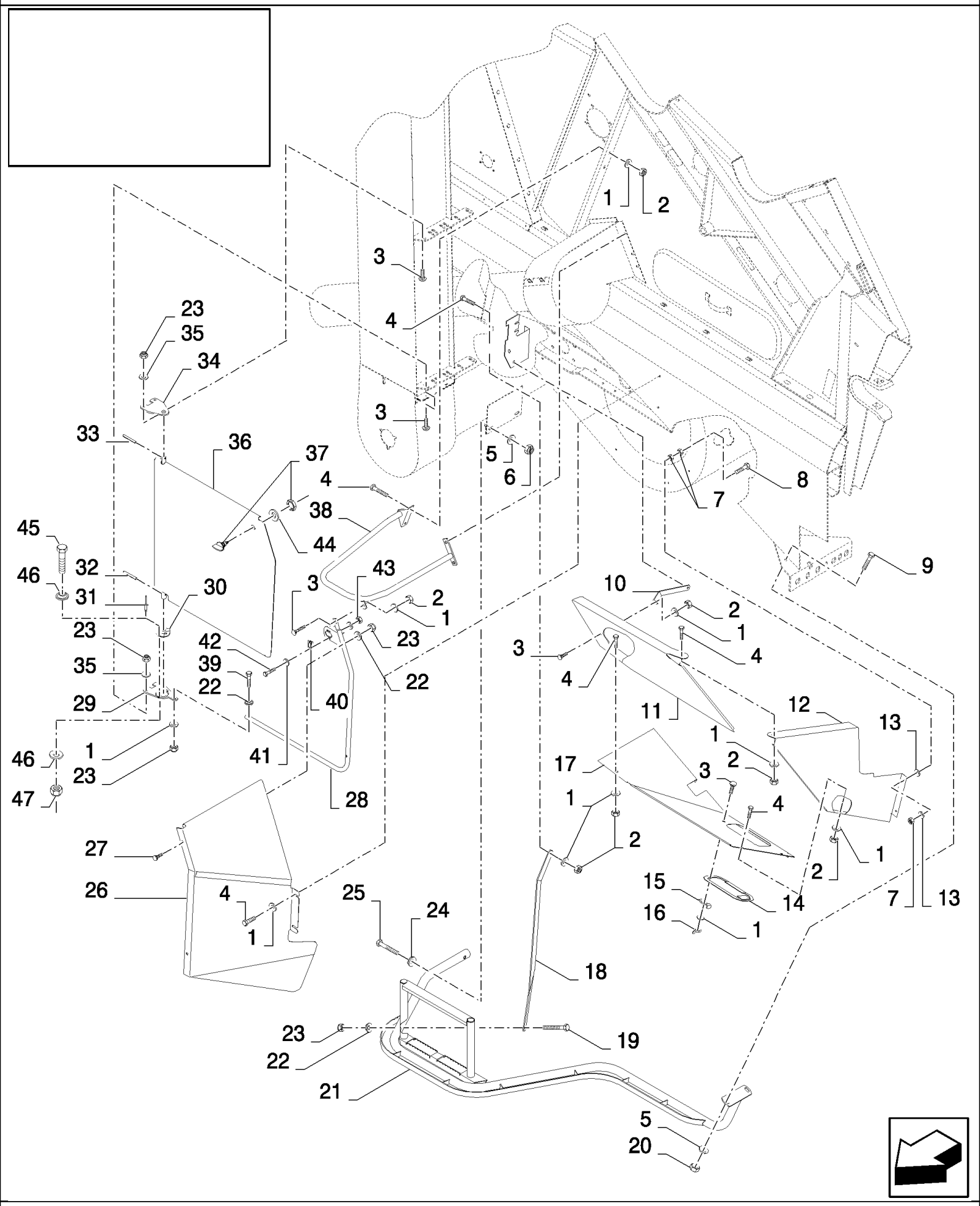

CX880 COMBINE - BASE UNIT (2/01-)

08.09(01) LOWER SHIELDS, RH

ссылка	Номер детали	Кол-во	Описание
1	322358	12	WASHER, SPRING, Belleville, M8, , BSN C237
1	412650	12	WASHER, Belleville, M8, , ASN D238
2	89706690	AR	NUT, M8, Cl 8,
3	86507486	AR	BOLT, CARRIAGE, Short NK, M8 x 20, Cl8.8, Full Thd,
4	120104	AR	SCREW, Hex, M8 x 20, 8.8,
5	140045	AR	WASHER, SPRING, Belleville, M10,
6	100037	2	NUT, M10 x 1.5, Cl 8,
7	15896221	21	NUT, M6, Cl 10, , BSN C237
7	15896221	7	NUT, M6, Cl 10, , ASN D238
8	86977786	7	BOLT, Hex, M6 x 25, 8.8, , BSN C237
9	43140	2	BOLT, Hex, M10 x 30, 8.8, Full Thd,
10	86581770	1	SUPPORT, , FOR SELF LEVELLING ONLY
10	86610818	1	SUPPORT, , FOR FIXED SHOE ONLY
11	86583185	1	GUARD, , BSN C315
11	87011193	1	SHIELD, , ASN D316
12	86583464	1	GUARD, , BSN C237
12	86623786	1	GUARD, , BSN F238315
12	87011191	1	SHIELD, , ASN D316
13	322357	14	WASHER, SPRING, Belleville, M6, , BSN C237
13	412649	14	WASHER, SPRING, Belleville, M6, , ASN D238
14	916303	1	COVER, , BSN C439
15	425093	1	CLIP, , BSN C439
16	84807781	1	NUT, WING, M8, , BSN C439
17	86583465	1	GUARD, , BSN C315
17	87011195	1	SHIELD, , BSN F316439
17	84459682	1	SHIELD, , ASN D440
18	86581803	1	SUPPORT, , FOR SELF LEVELLING ONLY
18	86596444	1	SUPPORT, , FOR FIXED SHOE ONLY
19	120061	1	BOLT, Hex, M8 x 60, 8.8,
20	100016	2	NUT, M10, Cl 8,
21	86596999	1	PLATE, STEP, , BSN C439
21	84453542	1	PLATE, STEP, , ASN D440
22	333962	4	CLAMP,
23	86629542	8	NUT, LOCK, M8 x 1.25, Cl 8, , BSN C237
23	86629542	6	NUT, LOCK, M8 x 1.25, Cl 8, , ASN D238
24	379401	2	CLAMP,
25	120070	2	BOLT, Hex, M10 x 60, 8.8,
26	86583204	1	GUARD, , BSN C479
26	84462249	1	SHIELD, , ASN D480
27	43465	2	BOLT, CARRIAGE, Short NK, M8 x 30, Cl8.8, Full Thd,
28	86583195	1	SUPPORT, , BSN C439
28	84455298	1	SUPPORT, , ASN D440
29	86583189	1	PLATE, , BSN C309
29	84442331	1	PLATE, , BSN F310359

CX880 COMBINE - BASE UNIT (2/01-)

08.09(01) LOWER SHIELDS, RH

ссылка	Номер детали	Кол-во	Описание
29	87031075	1	PLATE, , ASN D360
30	921928	1	BUSHING, , BSN C237
30	86623764	1	BUSHING, , BSN F238359
30	87032966	1	BUSHING, , ASN D360
31	NS	2	NOT SERVICED, , BSN C359
32	9503517	1	PIN, , BSN C237
32	381928	1	PIN, LOCK, M10 x 50, Slotted, , ASN D238
33	86543705	1	PIN,
34	86583186	1	SUPPORT, , BSN C359
34	87031133	1	BRACKET, , ASN D360
35	140016	4	WASHER, M8 x 16 x 1.6, , BSN C237
35	412650	4	WASHER, Belleville, M8, , ASN D238
36	86583192	1	DOOR, , BSN C237
36	86623779	1	DOOR, , BSN F238439
36	84454406	1	DOOR, , ASN D440
37	9705390	1	LATCH,
38	86596369	1	SUPPORT, , BSN C439
39	43129	1	BOLT, Hex, M8 x 40, 8.8,
40	9840986	1	CLIP,
41	322355	4	WASHER, Belleville, M4,
42	385683	2	BOLT, Hex, M4 x 10, 8.8, Full Thd,
43	100012	2	NUT, M4, Cl 8,
44	20347	1	WASHER, LOCK, Int Tooth, 3/4", , ASN D360
45	86977789	2	SCREW, Hex, M6 x 35, 8.8, , ASN D360
46	86588450	4	WASHER, M6, , ASN D360
47	353308	2	NUT, M6 x 1, Cl 8, , ASN D360

CX880 COMBINE - BASE UNIT (2/01-)

08.10(01) LOWER SHIELDS WITH TRACKS, RH - NOT FOR NA

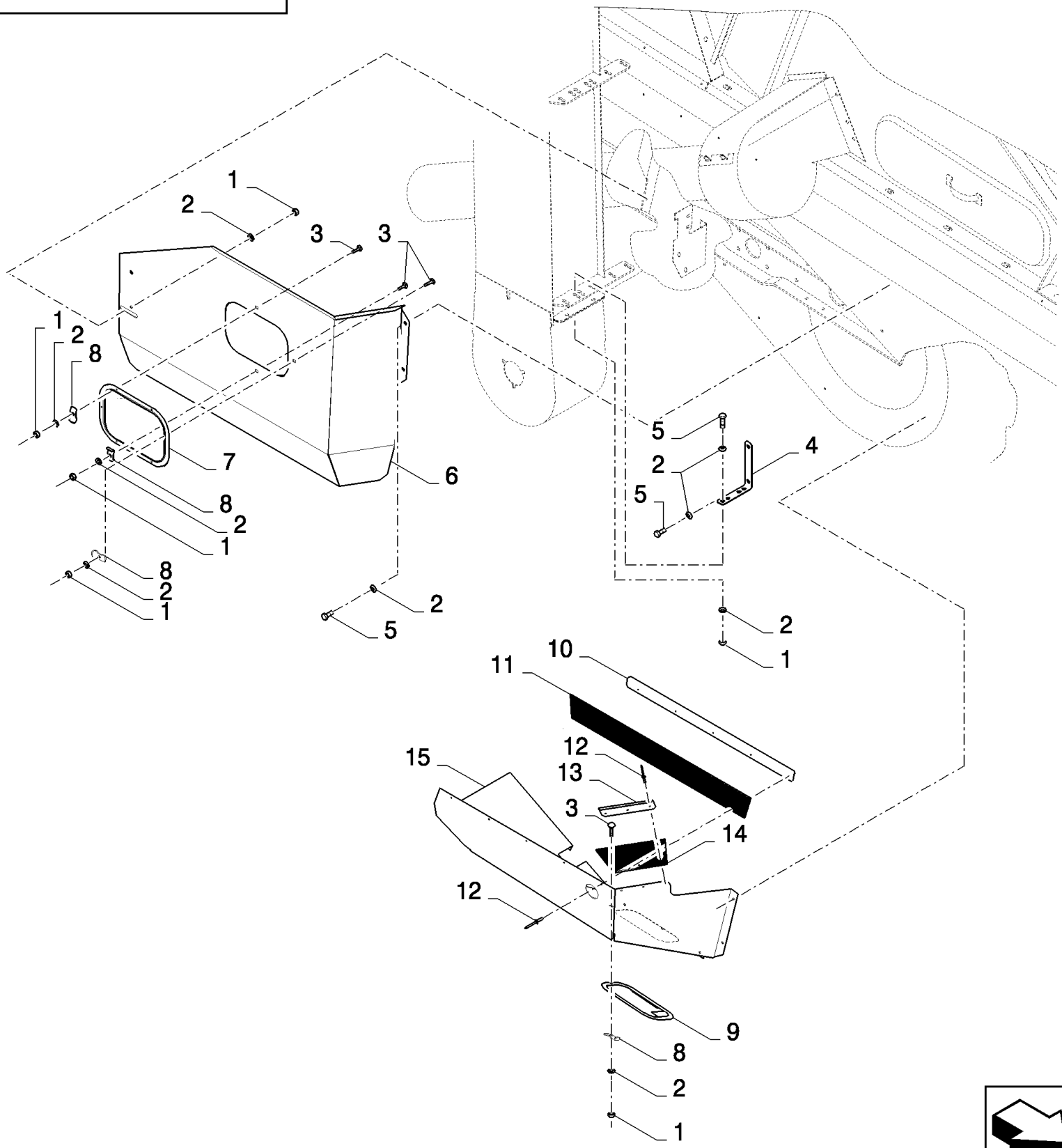

CX880 COMBINE - BASE UNIT (2/01-)

08.10(01) LOWER SHIELDS WITH TRACKS, RH - NOT FOR NA

ссылка	Номер детали	Кол-во	Описание
1	89706690	8	NUT, M8, Cl 8,
2	322358	14	WASHER, SPRING, Belleville, M8,
3	86507486	4	BOLT, CARRIAGE, Short NK, M8 x 20, Cl8.8, Full Thd,
4	84440421	1	SUPPORT,
5	120104	6	SCREW, Hex, M8 x 20, 8.8,
6	84440418	1	SHIELD,
7	84320078	1	COVER,
8	425093	4	CLIP,
9	916303	1	COVER,
10	84441417	1	PLATE,
11	84441412	1	CANVAS,
12	NS	8	NOT SERVICED,
13	84441419	1	PLATE,
14	84441413	1	CANVAS,
15	84440409	1	SHIELD,

08.11(01) DOOR LOCK - C439

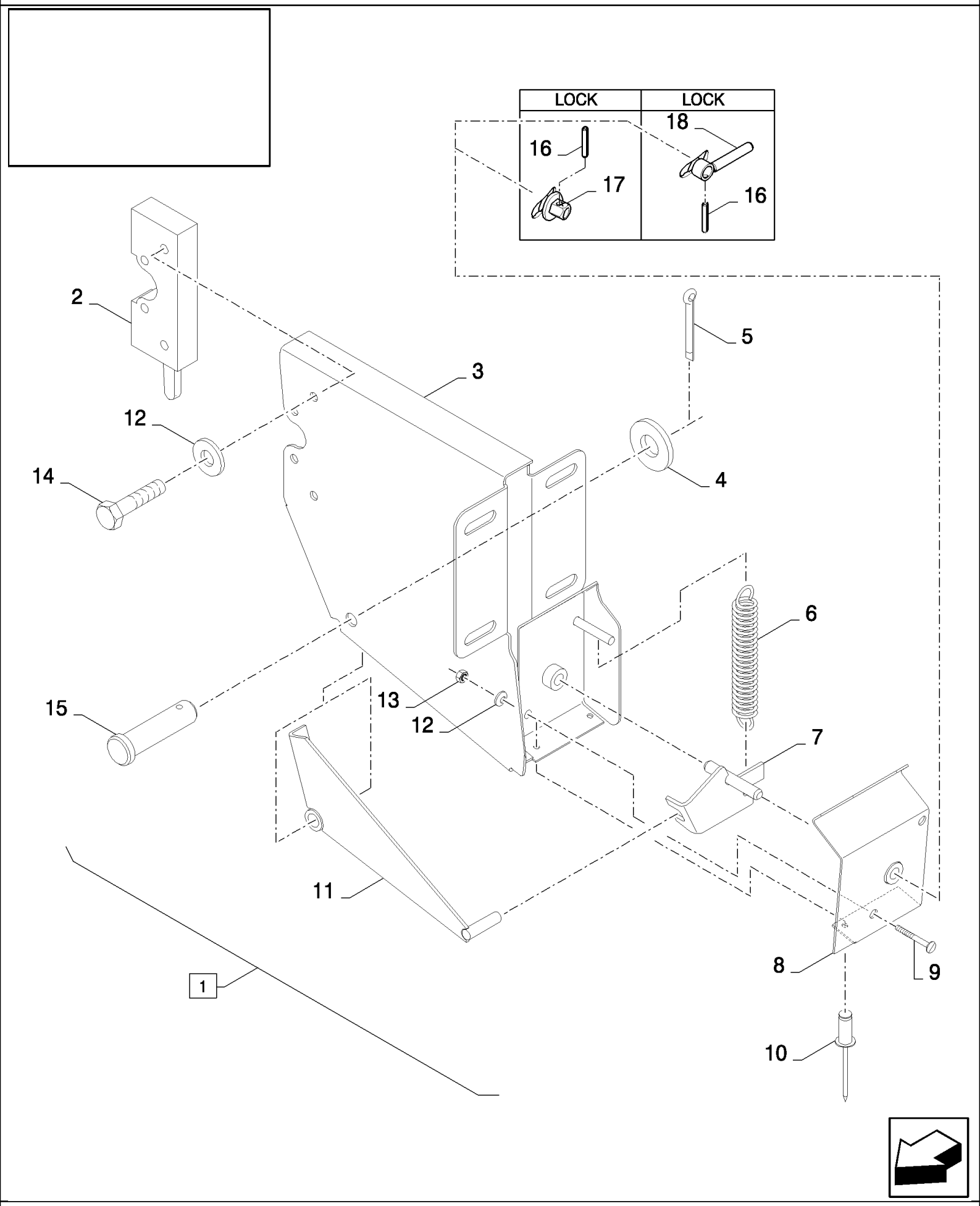

CX880 COMBINE - BASE UNIT (2/01-)

08.11(01) DOOR LOCK - C439

ссылка	Номер детали	Кол-во	Описание
1	86596931	1	LATCH, (2 to 15)
2	86531581	1	LATCH,
3	86596906	1	SUPPORT,
4	140017	1	WASHER, M10 x 20 x 2,
5	130003	1	PIN, SPLIT (COTTER), M3.2 x 20,
6	12255	1	SPRING,
7	86596927	1	PIN,
8	86596923	1	COVER,
9	86511833	1	SCREW, Cross Pan Hd, M6 x 40, M6x40
10	NS	4	NOT SERVICED,
11	86596913	1	SUPPORT,
12	322357	5	WASHER, SPRING, Belleville, M6,
13	15896221	1	NUT, M6, Cl 10,
14	86977786	4	BOLT, Hex, M6 x 25, 8.8,
15	80340040	1	
16	388628	2	PIN, LOCK, M3 x 12, Slotted,
17	86596930	2	LOCK,
18	86623069	2	HANDLE,

08.11(02) DOOR LOCK - D440

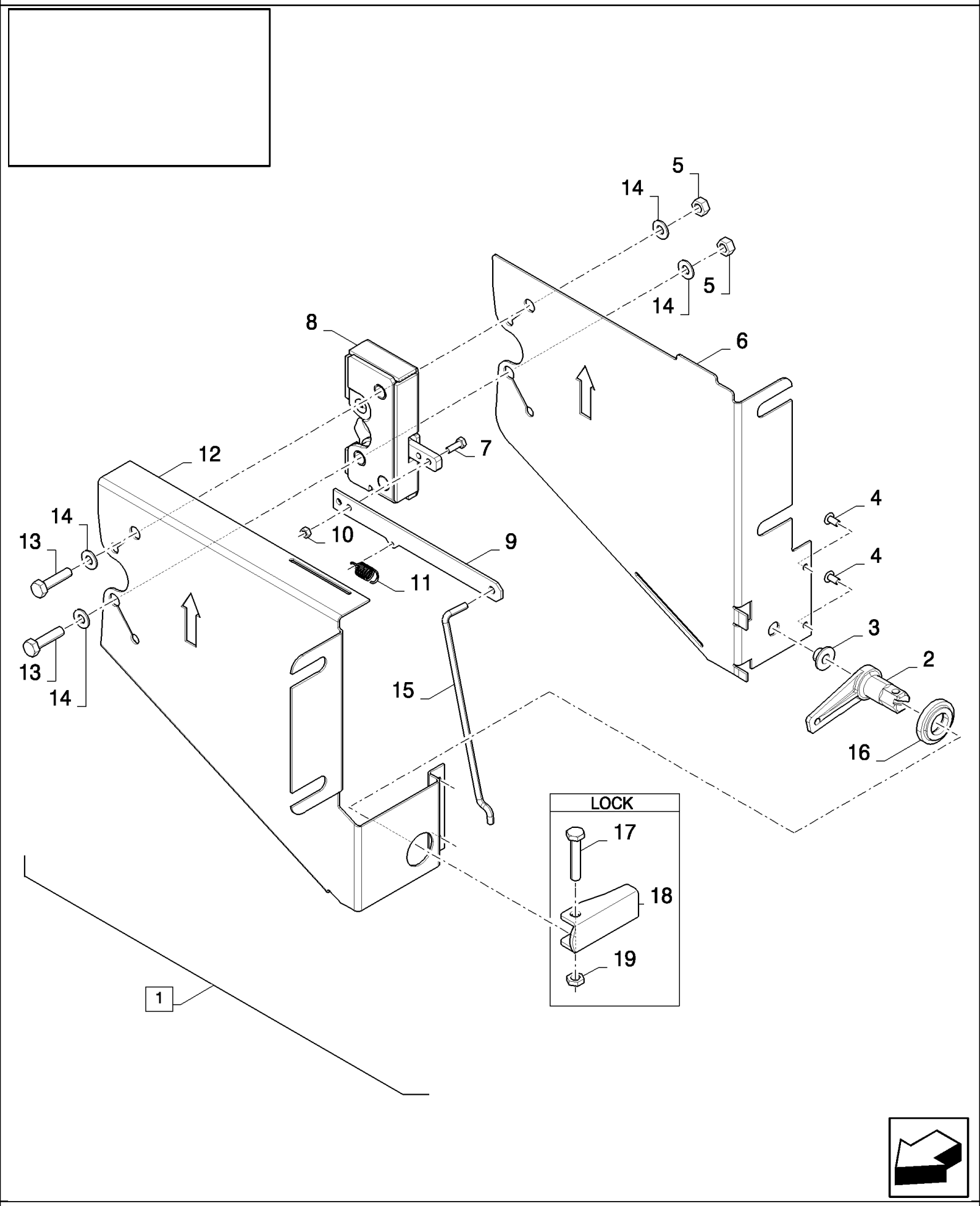

CX880 COMBINE - BASE UNIT (2/01-)

08.11(02) DOOR LOCK - D440

ссылка	Номер детали	Кол-во	Описание
1	86623939	1	LATCH ASSY., (2 to 16)
2	84443481	1	LEVER,
3	80264036	1	BUSHING,
4	80425519	2	
5	89706690	2	NUT, M8, Cl 8,
6	84441979	1	PLATE,
7	80412064	2	SCREW, M4x16
8	84442020	1	LOCK,
9	84442025	1	LEVER,
10	80385681	2	NUT, LOCK, M4
11	84822338	1	SPRING,
12	84441955	1	PLATE,
13	80412479	2	SCREW, M8x35
14	80322358	4	WASHER,
15	84458715	1	ROD,
16	84444308	1	BUSHING,
17	80412255	1	SCREW, M4x20
18	84454467	1	HANDLE,
19	80100012	1	NUT, M4

08.12(01) DOOR LOCK - C439

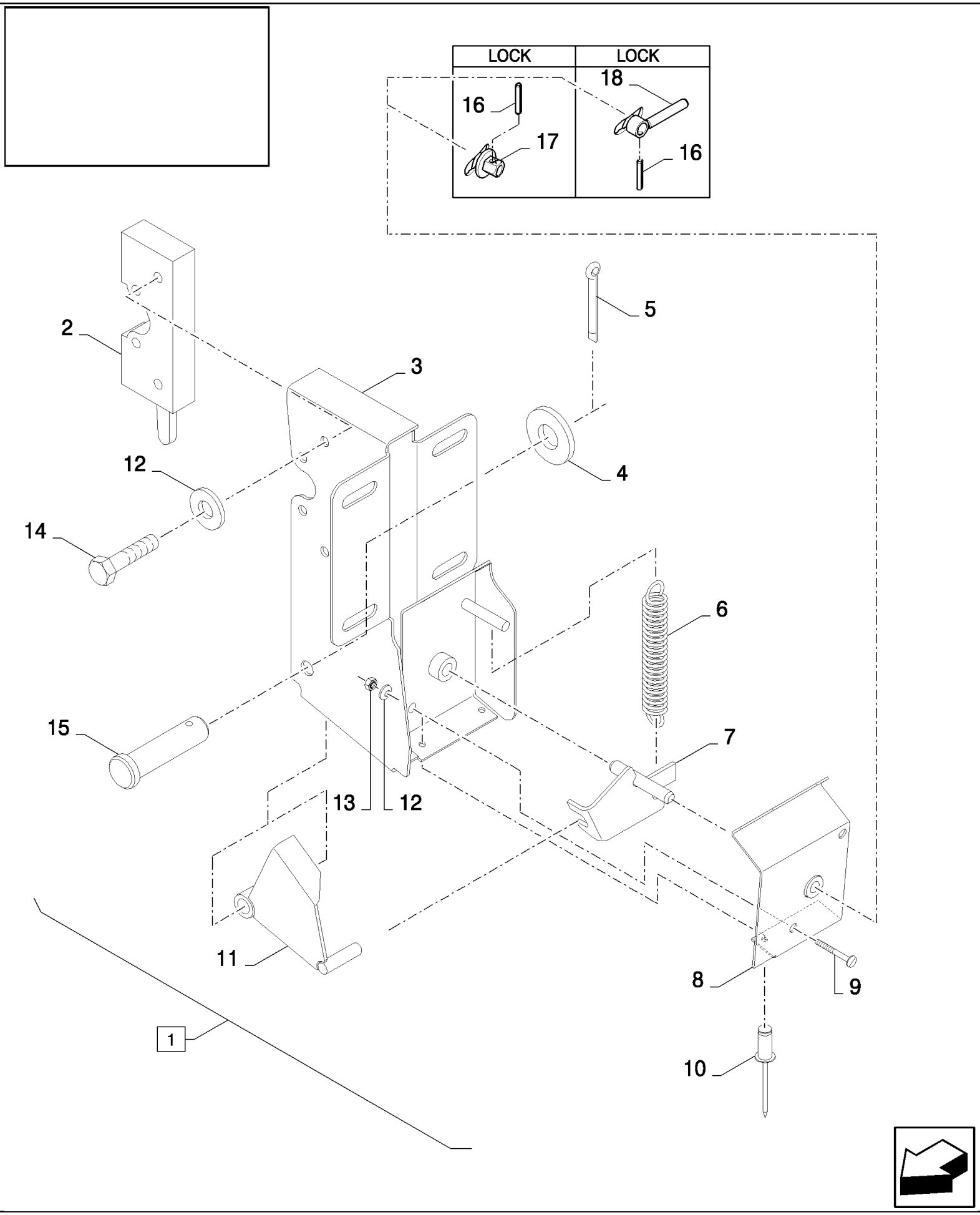

CX880 COMBINE - BASE UNIT (2/01-)

08.12(01) DOOR LOCK - C439

ссылка	Номер детали	Кол-во	Описание
1	86596940	1	LATCH, (2 to 15)
2	86531581	1	LATCH,
3	86596917	1	SUPPORT,
4	140017	1	WASHER, M10 x 20 x 2,
5	130003	1	PIN, SPLIT (COTTER), M3.2 x 20,
6	12255	1	SPRING,
7	86596927	1	PIN,
8	86596923	1	COVER,
9	86511833	1	SCREW, Cross Pan Hd, M6 x 40, M6x40
10	NS	4	NOT SERVICED,
11	86596920	1	SUPPORT,
12	322357	5	WASHER, SPRING, Belleville, M6,
13	15896221	1	NUT, M6, Cl 10,
14	86977786	4	BOLT, Hex, M6 x 25, 8.8,
15	80340040	1	
16	388628	2	PIN, LOCK, M3 x 12, Slotted,
17	86596930	2	LOCK,
18	86623069	2	HANDLE,

08.12(02) DOOR LOCK - D440

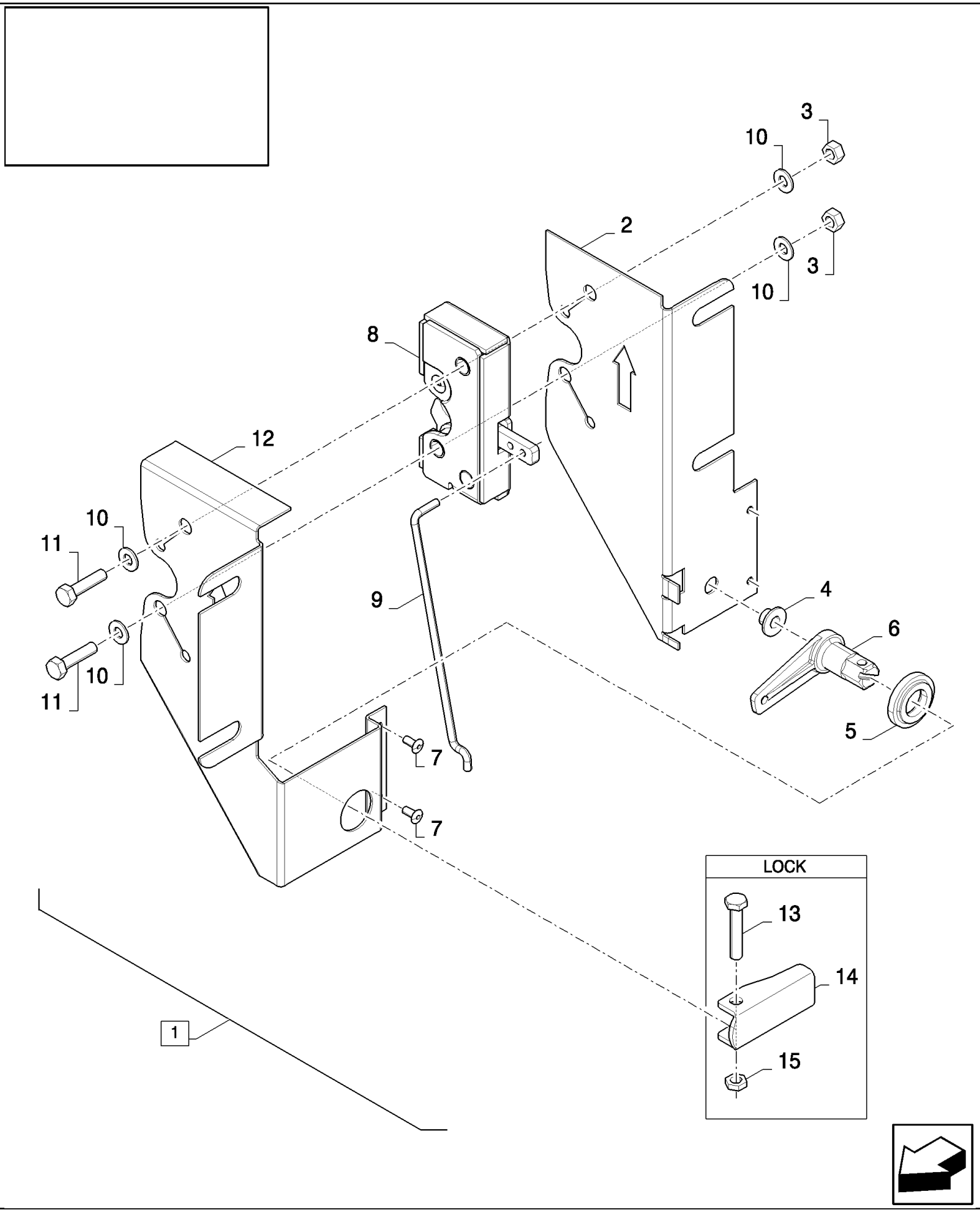

CX880 COMBINE - BASE UNIT (2/01-)

08.12(02) DOOR LOCK - D440

ссылка	Номер детали	Кол-во	Описание
1	86623938	1	LATCH, (2 to 12)
2	84441988	1	PLATE,
3	89706690	2	NUT, M8, Cl 8,
4	80264036	1	BUSHING,
5	84444308	1	BUSHING,
6	84443481	1	LEVER,
7	80425519	2	
8	84442020	1	LOCK,
9	84458715	1	ROD,
10	80322358	4	WASHER,
11	80300381	2	SCREW, M8x35
12	84441983	1	PLATE,
13	80412255	1	SCREW, M4x20
14	84454467	1	HANDLE,
15	80100012	1	NUT, M4

08.13(01) STRAW HOOD SHIELDS, LH

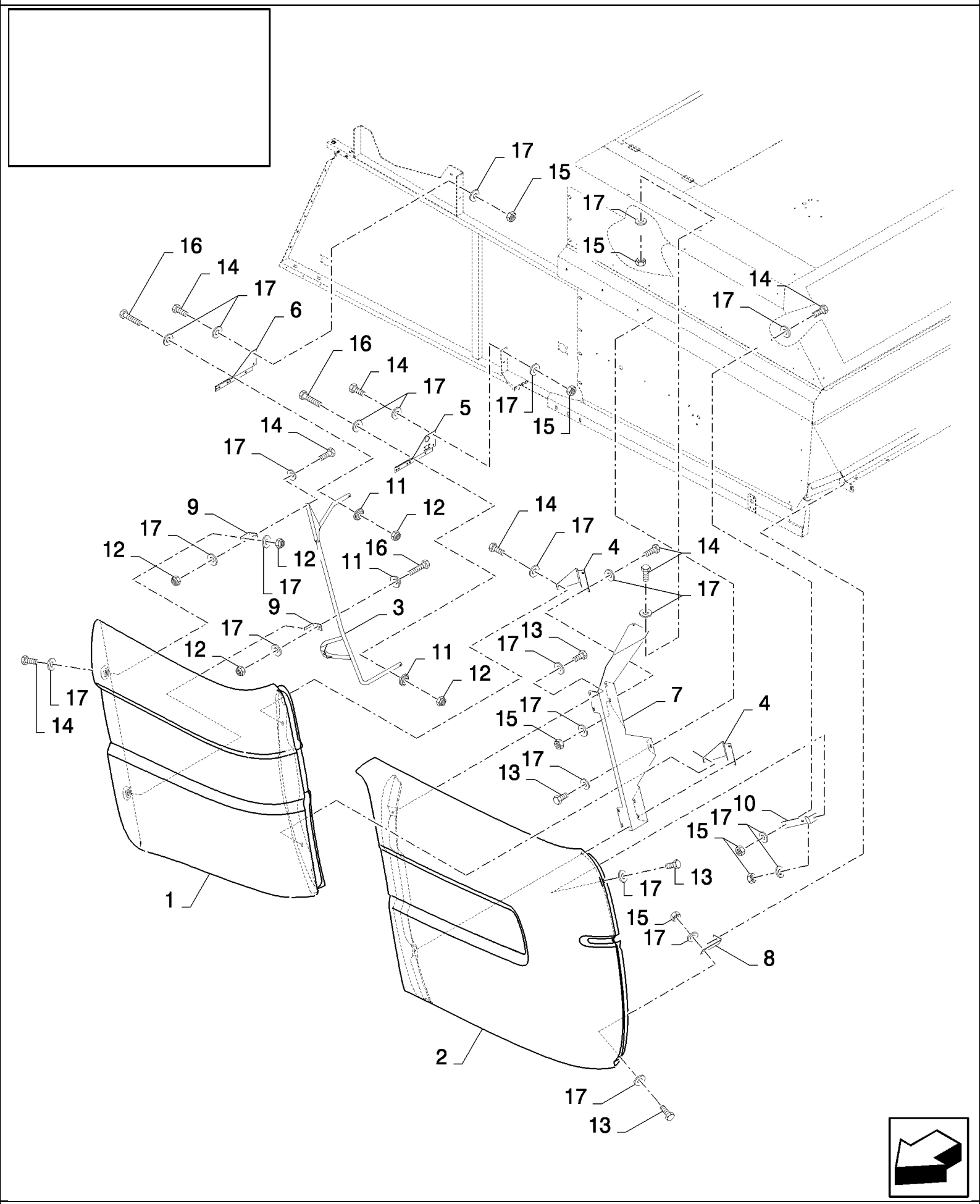

CX880 COMBINE - BASE UNIT (2/01-)

08.13(01) STRAW HOOD SHIELDS, LH

ссылка	Номер детали	Кол-во	Описание
1	86583259	1	GUARD, , BSN C411
1	84452961	1	GUARD, , ASN D412
2	86583262	1	GUARD,
3	86583269	1	TUBE,
4	86623750	2	BRACKET, , BSN C411
4	84453232	2	BRACKET, , ASN D412
5	86623021	1	BRACKET,
6	86598254	1	BRACKET,
7	86623752	1	BRACKET,
8	86583245	1	ANGLE,
9	86583274	2	ANGLE, , BSN C411
9	84452920	2	ANGLE, , ASN D412
10	86583267	1	BRACKET,
11	333962	5	CLAMP,
12	86629542	8	NUT, LOCK, M8 x 1.25, Cl 8,
14	120104	17	SCREW, Hex, M8 x 20, 8.8,
14	86507486	2	BOLT, CARRIAGE, Short NK, M8 x 20, Cl8.8, Full Thd,
15	89706690	12	NUT, M8, Cl 8,
16	43129	5	BOLT, Hex, M8 x 40, 8.8,
17	412650	44	WASHER, Belleville, M8,
13	16043224	5	BOLT, Hex, M8 x 16, 8.8, Full Thd,

08.14(01) STRAW HOOD SHIELD, RH

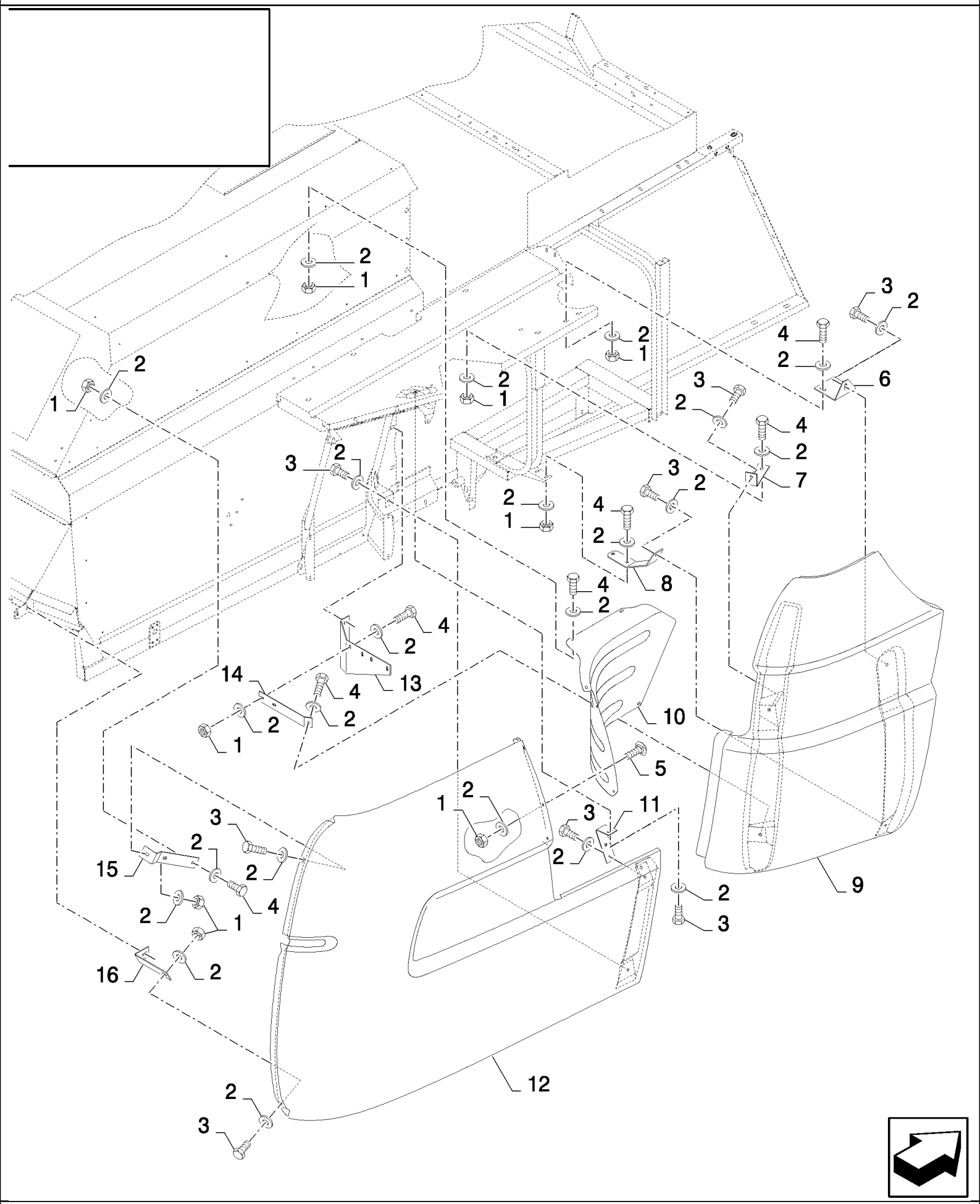

CX880 COMBINE - BASE UNIT (2/01-)

08.14(01) STRAW HOOD SHIELD, RH

ссылка	Номер детали	Кол-во	Описание
1	89706690	18	NUT, M8, Cl 8,
2	412650	40	WASHER, Belleville, M8,
3	16043224	10	BOLT, Hex, M8 x 16, 8.8, Full Thd,
4	120104	12	SCREW, Hex, M8 x 20, 8.8,
5	86619060	4	BOLT, CARRIAGE, Short NK, M8 x 16, Cl8.8, Full Thd,
6	86583225	1	ANGLE,
7	86583227	1	ANGLE,
8	86583764	1	ANGLE,
9	86583260	1	GUARD,
10	86583264	1	GUARD, , BSN C495
10	84458138	1	PLATE, , ASN D496
11	86583243	1	ANGLE,
12	86583263	1	SHIELD,
13	86583283	1	BRACKET,
14	86583762	1	ANGLE,
15	86583267	1	BRACKET,
16	86583247	1	ANGLE,

08.15(01) PLATFORM

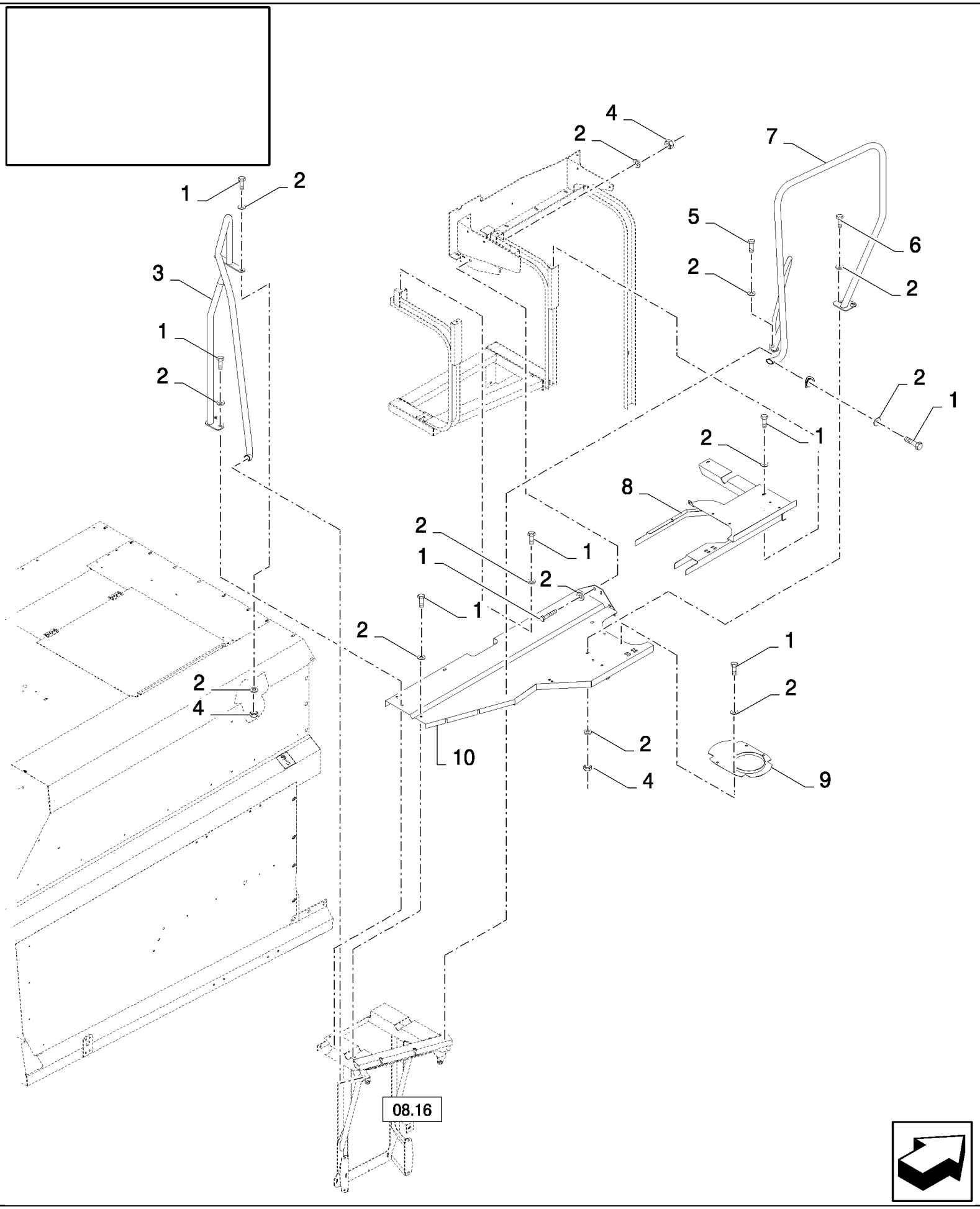

CX880 COMBINE - BASE UNIT (2/01-)

08.15(01) PLATFORM

ссылка	Номер детали	Кол-во	Описание
1	16043224	AR	BOLT, Hex, M8 x 16, 8.8, Full Thd,
2	412650	AR	WASHER, Belleville, M8,
3	86623904	1	HANDRAIL, , BSN C415
3	84457574	1	HANDRAIL, , BSN F416495
3	84461545	1	HANDRAIL, , ASN D496
4	89706690	1	NUT, M8, Cl 8,
5	120104	1	SCREW, Hex, M8 x 20, 8.8,
6	43127	2	BOLT, Hex, M8 x 25, 8.8,
7	86596493	1	HANDRAIL, , FOR 3 M VERSION OF CX820, CX840, CX860 ONLY, BSN C495
7	87350795	1	HANDRAIL, , FOR 3 M VERSION OF CX820, CX840, CX860 ONLY, ASN D496
7	86596491	1	HANDRAIL, , BSN C495
7	84461544	1	HANDRAIL, , ASN D496
8	86596377	1	PLATFORM, , FOR 3 M VERSION OF CX820, CX840, CX860 ONLY
8	86596383	1	PLATFORM, , BSN C495
8	86596377	1	PLATFORM, , ASN D496
9	86582149	1	PLATE, , FOR 3 M VERSION OF CX820, CX840, CX860 ONLY, BSN C359
9	84449602	1	PLATE, , FOR 3 M VERSION OF CX820, CX840, CX860 ONLY, ASN D360
10	86596497	1	PLATFORM, , FOR 3 M VERSION OF CX820, CX840, CX860 ONLY, BSN C495
10	87350776	1	PLATFORM, , FOR 3 M VERSION OF CX820, CX840, CX860 ONLY, ASN D496
10	86596499	1	PLATFORM, , BSN C495
10	87347124	1	PLATFORM, , ASN D496

08.16(01) PLATFORM LADDER

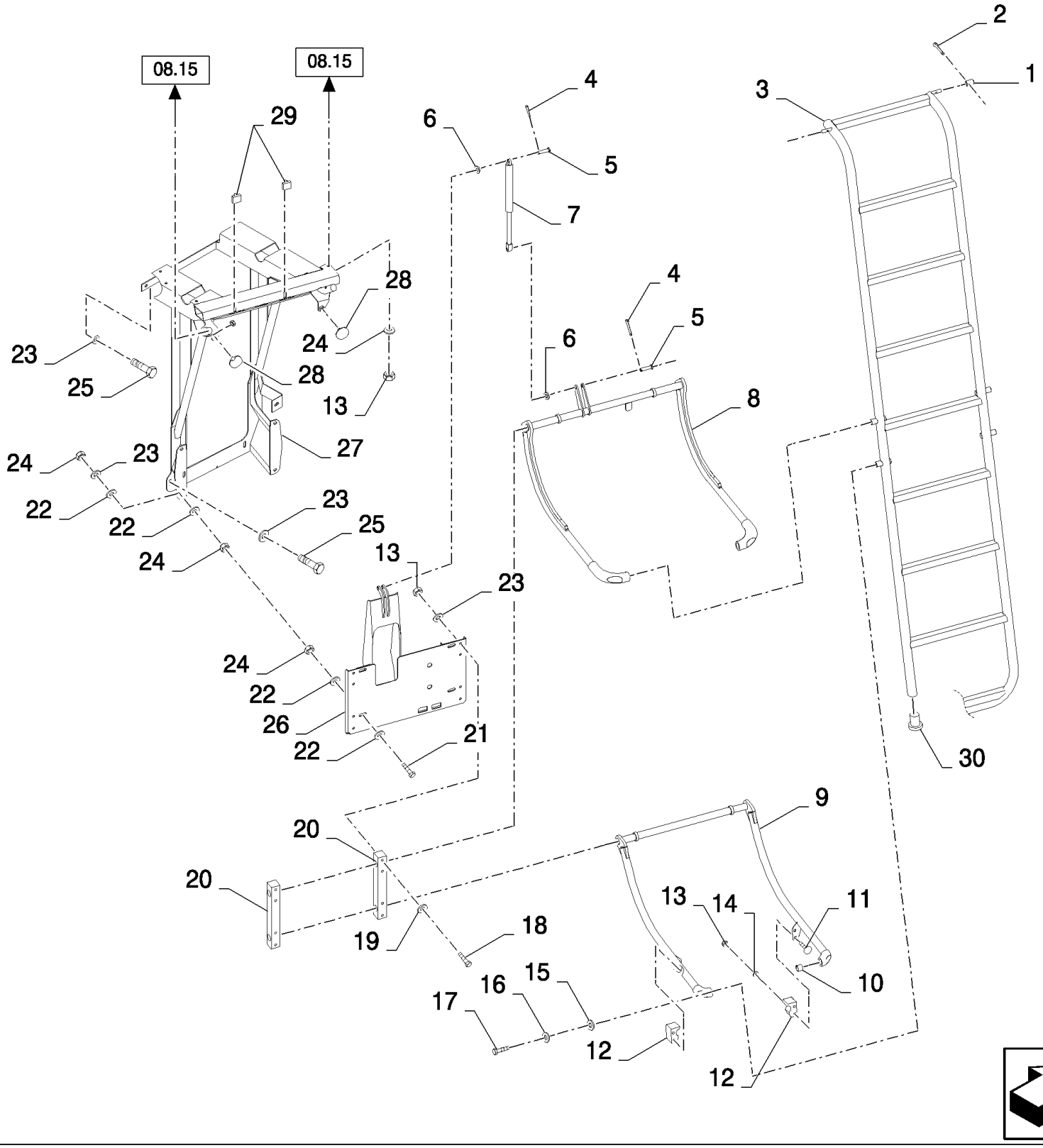

CX880 COMBINE - BASE UNIT (2/01-)

08.16(01) PLATFORM LADDER

ссылка	Номер детали	Кол-во	Описание
1	86623019	2	SPACER, , BSN C309
2	9511933	2	PIN, LOCK, M4 x 20, Slotted, , BSN C309
3	86596416	1	LADDER, , BSN C309
3	84444026	1	LADDER, , BSN F310495
3	84461268	1	LADDER, , BSN F496515
3	87535212	1	LADDER, , ASN D516
4	130003	2	PIN, SPLIT (COTTER), M3.2 x 20,
5	345785	2	PIN, CLEVIS, M10 x 45,
6	378244	2	WASHER, M10,
7	84400789	1	SHOCK ABSORBER, , BSN C495
7	87350134	1	SPRING, , BSN F496515
7	87527737	1	SPRING, , ASN D516
8	86638693	1	SUPPORT, , BSN C495
9	86596425	1	ARM, , BSN C495
9	84461267	1	ARM, , ASN D496
10	420761	4	BUSHING,
11	86512445	4	BOLT, CARRIAGE, Short NK, M8 x 60, Cl8.8,
12	84607119	2	LATCH,
13	86629542	12	NUT, LOCK, M8 x 1.25, Cl 8,
14	140016	4	WASHER, M8 x 16 x 1.6,
15	140041	4	WASHER, M8 x 28 x 3,
16	412650	5	WASHER, Belleville, M8,
18	120061	8	BOLT, Hex, M8 x 60, 8.8,
19	378243	16	WASHER, M8,
20	86596209	2	SUPPORT, , BSN C495
21	120115	4	SCREW, Hex, M10 x 70, 8.8, Full Thd,
22	86592700	16	WASHER, M10 x 28 x 4, HT,
23	140045	16	WASHER, SPRING, Belleville, M10,
24	100016	14	NUT, M10, Cl 8,
25	43138	8	SCREW, Hex, M10 x 20, 8.8, Full Thd,
26	86596443	1	SUPPORT, , BSN C495
27	86636670	1	ARM, , BSN C495
27	84461266	1	SUPPORT, , ASN D496
28	190029	2	INSULATOR BLOCK,
29	138140	2	BUMPER,
30	84444624	2	CAP, , ASN D310
17	16043224	4	BOLT, Hex, M8 x 16, 8.8, Full Thd,

08.17(01) STRAW HOOD SHIELDS, REAR

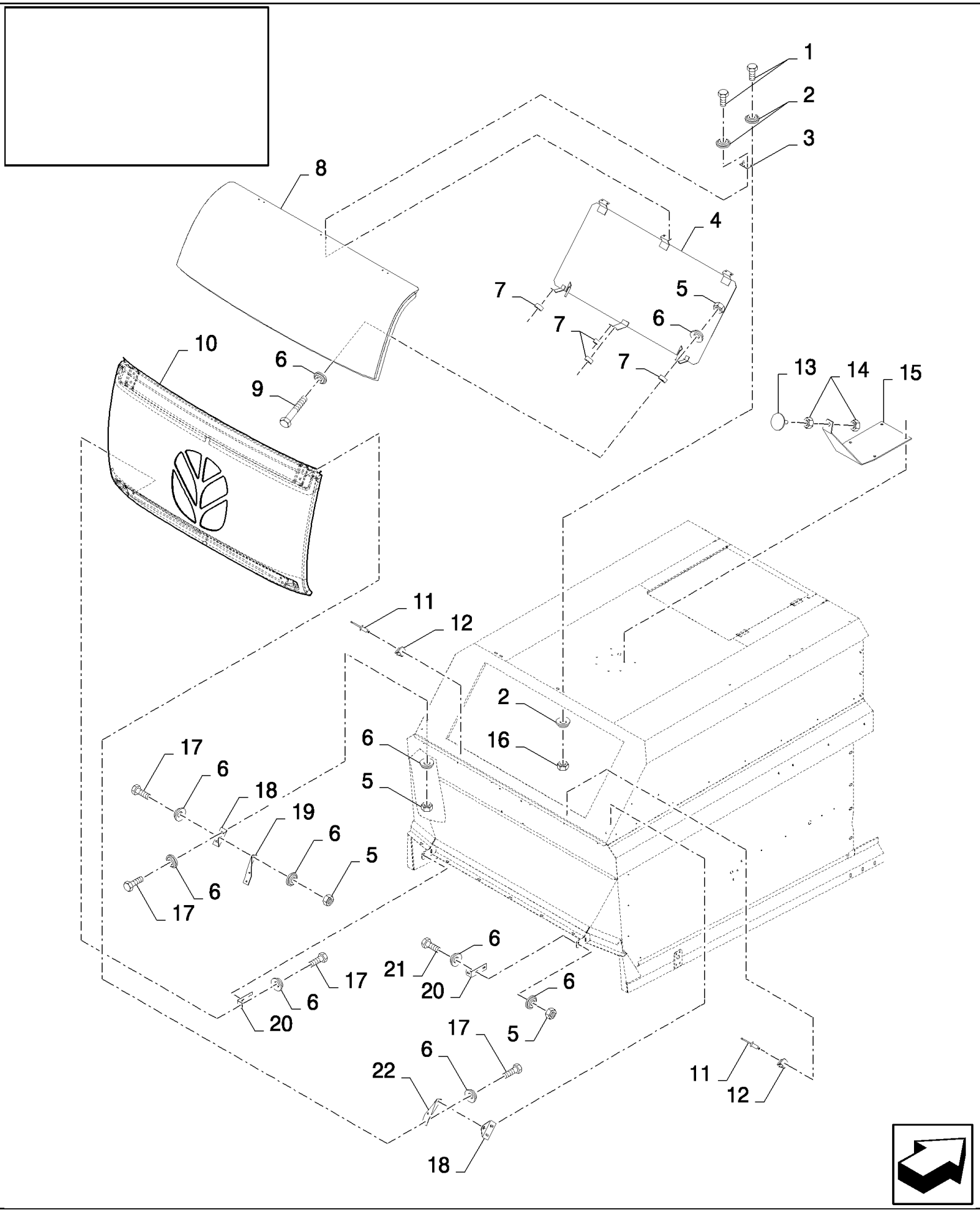

CX880 COMBINE - BASE UNIT (2/01-)

08.17(01) STRAW HOOD SHIELDS, REAR

ссылка	Номер детали	Кол-во	Описание
1	86508568	12	SCREW, Hex, M6 x 16, 8.8,
2	412649	18	WASHER, SPRING, Belleville, M6,
3	86529373	3	HINGE, , BSN C431
3	9833212	3	HINGE, , ASN D432
4	86596394	1	DOOR, , FOR CX720, CX740, CX760, CX780 ONLY, BSN C482
4	87315417	1	DOOR, , FOR CX720, CX740, CX760, CX780 ONLY, ASN D483
4	86596371	1	DOOR, , FOR CX820, CX840, CX860, CX880 ONLY, BSN C482
4	87347533	1	DOOR, , FOR CX820, CX840, CX860, CX880 ONLY, ASN D483
5	89706690	14	NUT, M8, Cl 8,
6	412650	34	WASHER, Belleville, M8,
7	9812123	4	RING,
8	86579797	1	SHIELD, , FOR CX720, CX740, CX760, CX780 ONLY
8	86576644	1	SHIELD, , FOR CX820, CX840, CX860, CX880 ONLY
9	43128	4	BOLT, Hex, M8 x 30, 8.8,
10	86579792	1	SHIELD, , FOR CX720, CX740, CX760, CX780 ONLY
10	86583261	1	GUARD, , FOR CX820, CX840, CX860, CX880 ONLY
11	325911	2	RIVET, Pop, M4.8 x 7.4,
12	323307	2	CLAMP,
13	190029	1	INSULATOR BLOCK,
14	100016	2	NUT, M10, Cl 8,
15	86623763	1	SUPPORT,
16	15896221	6	NUT, M6, Cl 10,
17	120104	12	SCREW, Hex, M8 x 20, 8.8,
18	86583265	2	ANGLE,
19	86583277	1	ANGLE,
20	84320811	2	ANGLE,
21	43127	4	BOLT, Hex, M8 x 25, 8.8,
22	86583279	1	ANGLE,

08.18(01) STRAW HOOD

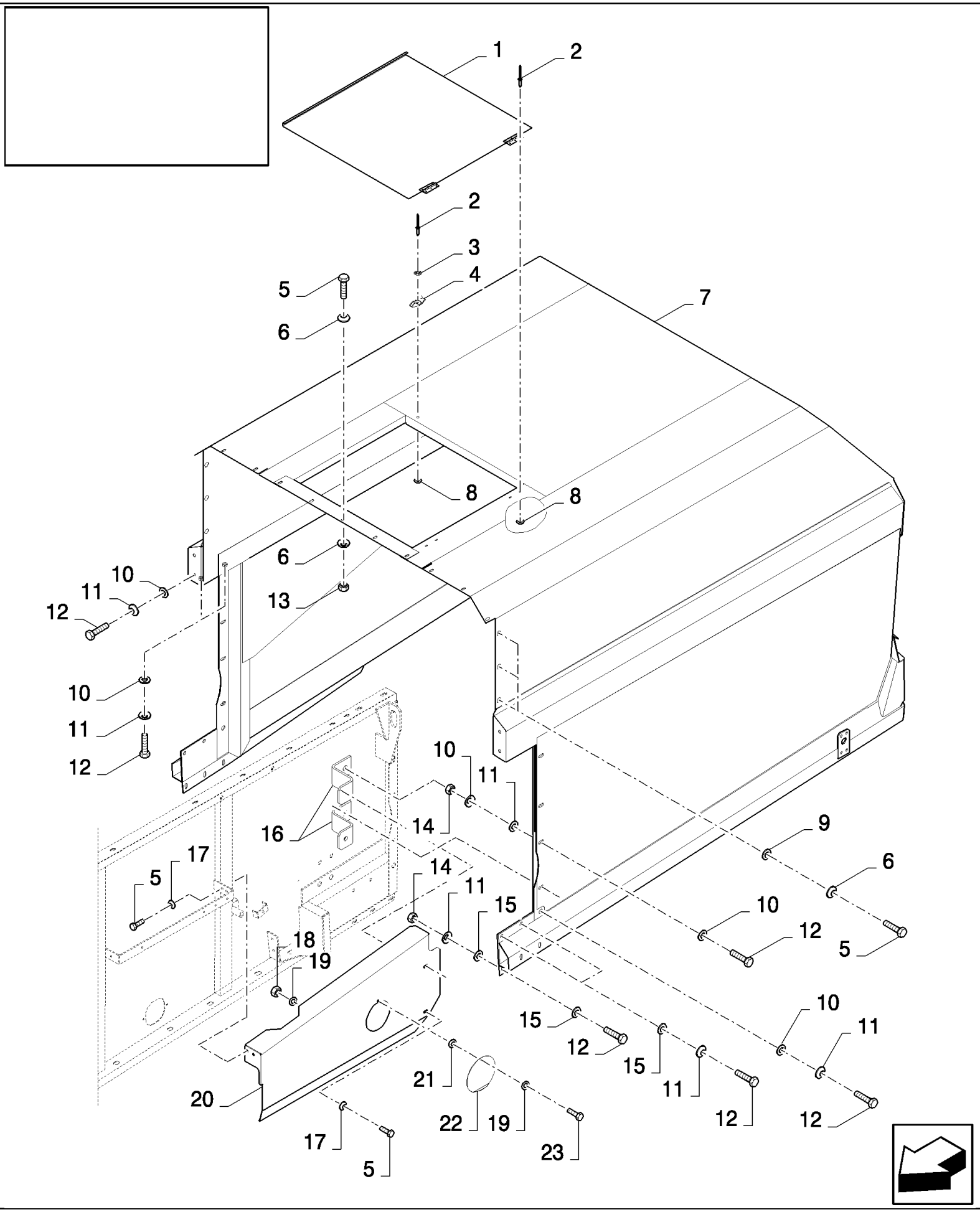

CX880 COMBINE - BASE UNIT (2/01-)

08.18(01) STRAW HOOD

ссылка	Номер детали	Кол-во	Описание
1	84077416	1	COVER,
2	NS	5	NOT SERVICED,
3	362785	1	WASHER,
4	362786	1	FASTENER,
5	120104	AR	SCREW, Hex, M8 x 20, 8.8,
6	412650	AR	WASHER, Belleville, M8,
7	84438891	1	HOOD, STRAW, , FOR CX820, CX840, CX860, CX880 ONLY
7	84076507	1	HOOD, STRAW, , FOR CX720, CX740, CX760, CX780 ONLY
8	89824840	5	WASHER, 4MM
9	140041	6	WASHER, M8 x 28 x 3,
10	140042	26	WASHER, M10 x 34 x 3,
11	140045	28	WASHER, SPRING, Belleville, M10,
12	43140	28	BOLT, Hex, M10 x 30, 8.8, Full Thd,
13	89706690	9	NUT, M8, Cl 8,
14	100016	14	NUT, M10, Cl 8,
15	378244	16	WASHER, M10,
16	84439465	2	SUPPORT,
17	322358	4	WASHER, SPRING, Belleville, M8,
18	353308	1	NUT, M6 x 1, Cl 8,
19	86588450	2	WASHER, M6,
20	84439441	1	GUARD,
21	300366	1	WASHER,
22	84437160	1	COVER,
23	86508568	1	SCREW, Hex, M6 x 16, 8.8,

08.19(01) STRAW HOOD, CANVAS

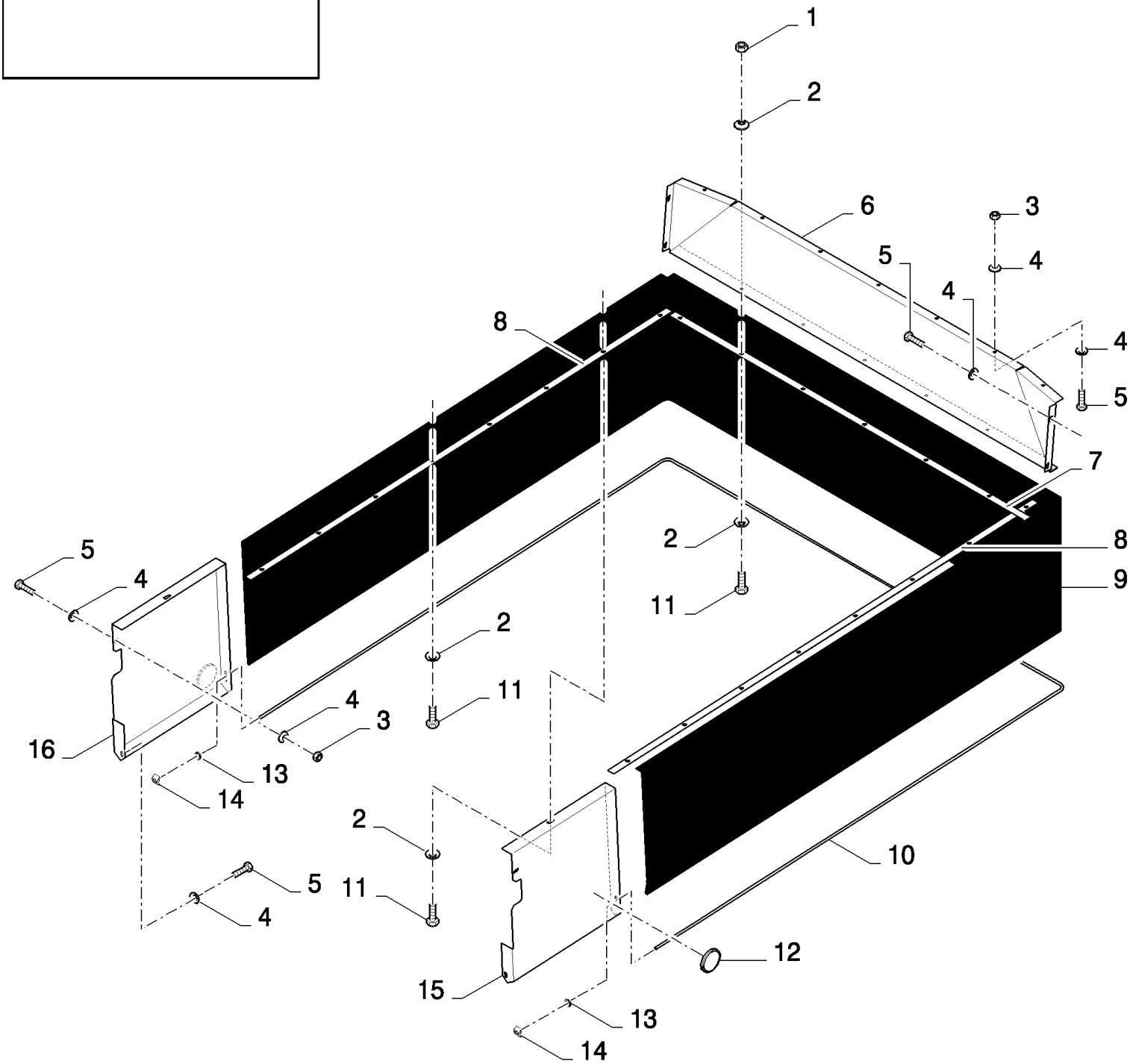

CX880 COMBINE - BASE UNIT (2/01-)

08.19(01) STRAW HOOD, CANVAS

ссылка	Номер детали	Кол-во	Описание
1	100016	AR	NUT, M10, Cl 8,
2	140045	AR	WASHER, SPRING, Belleville, M10,
3	89706690	AR	NUT, M8, Cl 8,
4	322358	AR	WASHER, SPRING, Belleville, M8,
5	120104	AR	SCREW, Hex, M8 x 20, 8.8,
6	84431314	1	PLATE, , FOR CX820, CX840, CX860, CX880 ONLY
6	84431315	1	PLATE, , FOR CX720, CX740, CX760, CX780 ONLY
7	84989462	1	PLATE, FIXING, , FOR CX820, CX840, CX860, CX880 ONLY
7	84431335	1	PLATE, FIXING, , FOR CX720, CX740, CX760, CX780 ONLY
8	84989460	2	PLATE, FIXING,
9	84989109	1	CANVAS, , FOR CX820, CX840, CX860, CX880 ONLY
9	84431290	1	CANVAS, , FOR CX720, CX740, CX760, CX780 ONLY
10	84989108	1	ROD, , FOR CX820, CX840, CX860, CX880 ONLY
10	84431288	1	ROD, , FOR CX720, CX740, CX760, CX780 ONLY
11	43138	AR	SCREW, Hex, M10 x 20, 8.8, Full Thd,
12	435895	2	REFLECTOR, , BSN C237
13	84001657	2	GROMMET,
14	432067	2	CIRCLIP,
15	84432893	1	PLATE,
16	84432894	1	PLATE,

08.20(01) ENGINE GUARDS

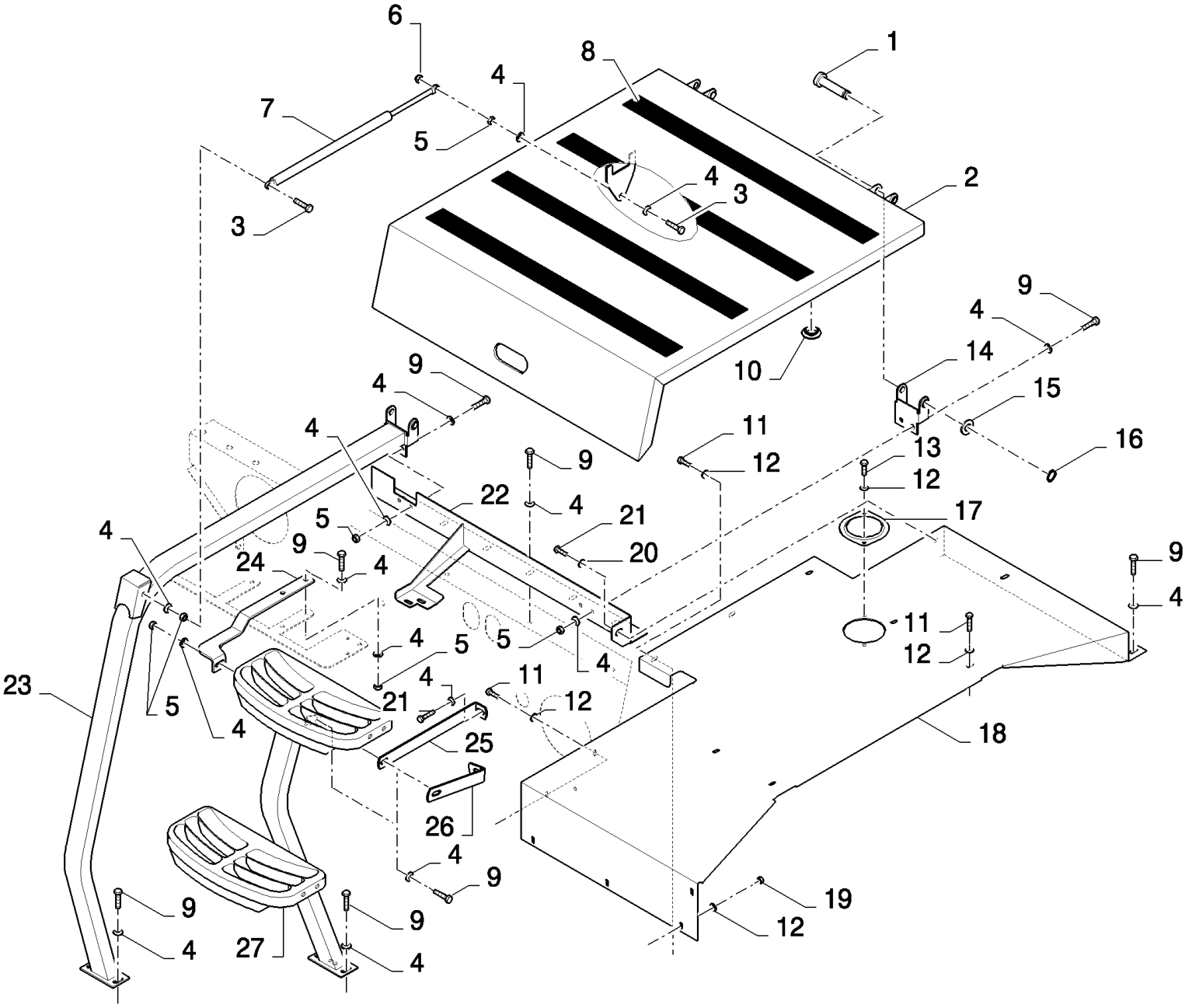

CX880 COMBINE - BASE UNIT (2/01-)

08.20(01) ENGINE GUARDS

ссылка	Номер детали	Кол-во	Описание
1	923016	2	PIN,
2	84075520	1	PANEL, ENGINE HOOD,
3	43128	2	BOLT, Hex, M8 x 30, 8.8,
4	322358	AR	WASHER, SPRING, Belleville, M8,
5	89706690	AR	NUT, M8, Cl 8,
6	86629542	1	NUT, LOCK, M8 x 1.25, Cl 8,
7	84334242	1	SHOCK ABSORBER,
8	401502	AR	STRIP, ANTI-SKID, 51mm x 18.3 Roll - Cut to Size
9	43127	AR	BOLT, Hex, M8 x 25, 8.8,
10	158188	4	PLUG,
11	120100	AR	BOLT, Hex, M6 x 20, 8.8,
12	322357	AR	WASHER, SPRING, Belleville, M6,
13	86508568	1	SCREW, Hex, M6 x 16, 8.8, , BSN C479
14	84075510	1	HALF-HINGE,
15	432651	2	WASHER, 12MM
16	300624	2	RING, SNAP, M12, Ext,
17	84334816	1	COVER, , BSN C479
18	84076707	1	PLATE, , FOR CX820, CX840 ONLY, FOR CX860 ONLY
18	84076701	1	PLATE, , FOR CX720, CX740, CX760, CX780 ONLY
18	84432920	1	PLATE, , FOR CX880 ONLY
19	15896221	4	NUT, M6, Cl 10,
20	412650	1	WASHER, Belleville, M8, 6MM
21	120104	AR	SCREW, Hex, M8 x 20, 8.8,
22	84075535	1	SUPPORT,
23	84075500	1	SUPPORT,
24	84334511	1	SUPPORT, , FOR CX720, CX740, CX760, CX780 ONLY, FOR CX820, CX840 ONLY
25	84437738	1	SUPPORT, , FOR CX860 ONLY
26	84432895	1	SUPPORT, , FOR CX880 ONLY
27	84075575	1	STEP, , BSN C479
27	84461474	1	STEP, , ASN D480

08.21(01) ENGINE GUARDS

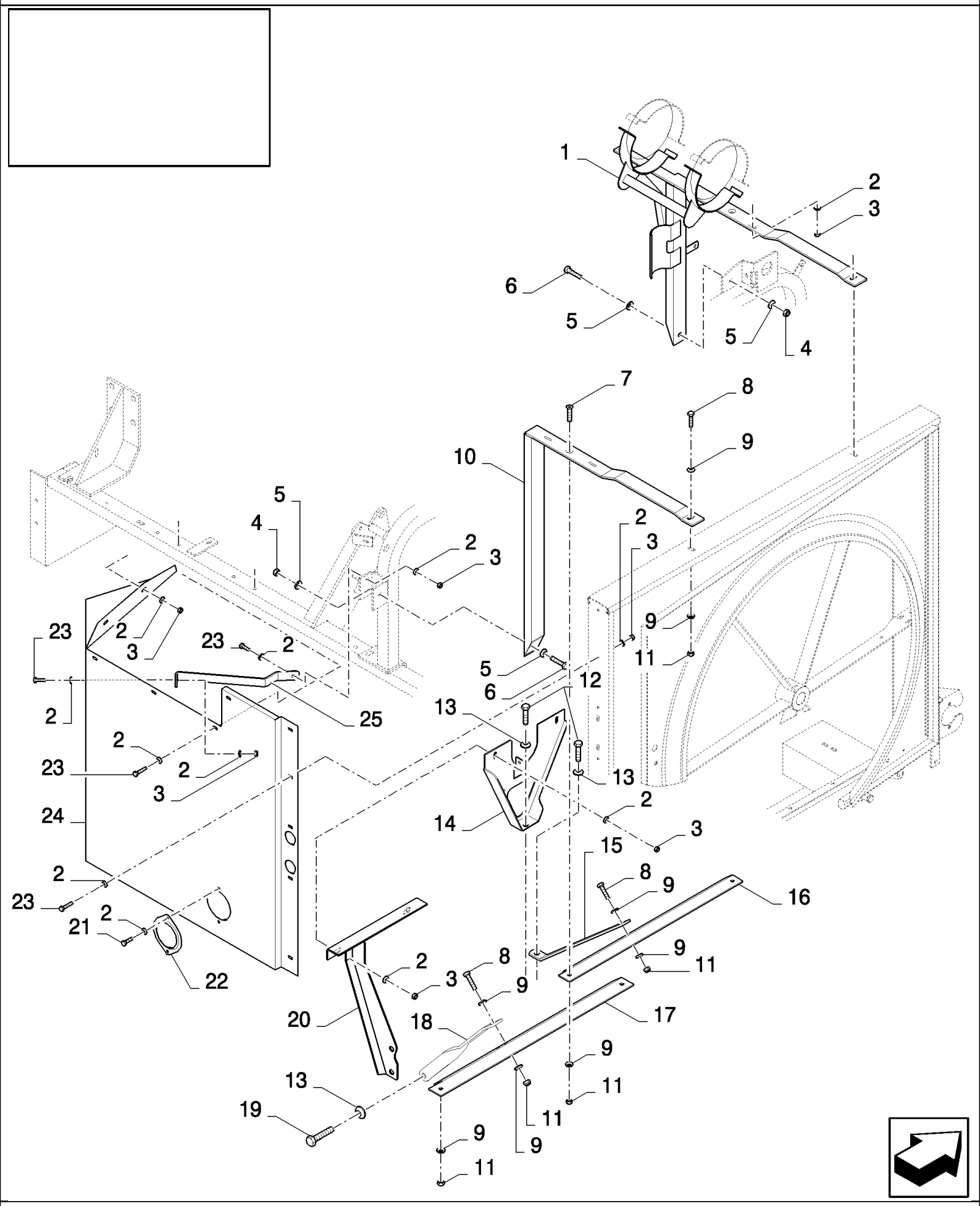

CX880 COMBINE - BASE UNIT (2/01-)

08.21(01) ENGINE GUARDS

ссылка	Номер детали	Кол-во	Описание
1	84071134	1	SUPPORT, , FOR CX860 ONLY, FOR CX820, CX840 ONLY, BSN C375
1	84448912	1	SUPPORT, , FOR CX820, CX840 ONLY, FOR CX860 ONLY, ASN D376
1	84071279	1	SUPPORT, , FOR CX720, CX740, CX760, CX780 ONLY, BSN C375
1	84449044	1	SUPPORT, , FOR CX720, CX740, CX760, CX780 ONLY, ASN D376
1	84432891	1	SUPPORT, , FOR CX880 ONLY, BSN C375
1	84449515	1	SUPPORT, , FOR CX880 ONLY, ASN D376
2	322357	AR	WASHER, SPRING, Belleville, M6, , BSN C277
2	412649	AR	WASHER, SPRING, Belleville, M6, , ASN D278
3	15896221	AR	NUT, M6, Cl 10,
4	100016	2	NUT, M10, Cl 8,
5	140046	4	WASHER, Belleville, M12,
6	43140	2	BOLT, Hex, M10 x 30, 8.8, Full Thd,
7	300498	2	SCREW, Hex Soc Flat Hd, M8 x 25, 10.9, M8x25, BSN C277
7	84814921	2	SCREW, Hex Soc Flat Hd, M8 x 25, 10.9, , ASN D278
8	43127	3	BOLT, Hex, M8 x 25, 8.8,
9	322358	AR	WASHER, SPRING, Belleville, M8,
10	84071135	1	SUPPORT, , FOR CX860 ONLY, FOR CX820, CX840 ONLY, BSN C375
10	84448910	1	SUPPORT, , FOR CX820, CX840 ONLY, FOR CX860 ONLY, ASN D376
10	84071277	1	SUPPORT, , FOR CX720, CX740, CX760, CX780 ONLY, BSN C375
10	84449043	1	SUPPORT, , FOR CX720, CX740, CX760, CX780 ONLY, ASN D376
10	84432869	1	SUPPORT, , FOR CX880 ONLY, BSN C375
10	84449510	1	SUPPORT, , FOR CX880 ONLY, ASN D376
11	89706690	AR	NUT, M8, Cl 8,
12	86508959	2	BOLT, Hex, 7/16"-14 x 7/8", G5, Full Thd, , FOR CX720, CX740, CX760, CX780 ONLY, FOR CX820, CX840 ONLY
13	140046	AR	WASHER, Belleville, M12,
14	84073776	1	SUPPORT, , FOR CX820, CX840 ONLY, FOR CX720, CX740, CX760, CX780 ONLY
15	84071584	1	SUPPORT, , FOR CX820, CX840 ONLY
15	84071492	1	SUPPORT, , FOR CX720, CX740, CX760, CX780 ONLY
16	84071583	1	SUPPORT, , FOR CX820, CX840 ONLY
16	84071860	1	SUPPORT, , FOR CX720, CX740, CX760, CX780 ONLY
17	84071583	1	SUPPORT, , FOR CX880 ONLY, FOR CX860 ONLY
18	84433307	1	SUPPORT, , FOR CX880 ONLY
18	84071489	1	SUPPORT, , FOR CX860 ONLY
19	300809	1	BOLT, Hex, M12 x 65, 8.8, M12x65, FOR CX860 ONLY
19	412677	1	BOLT, Hex, M12 x 30, 12.9, Full Thd, M12x30, FOR CX880 ONLY
20	84433474	1	SUPPORT, , FOR CX880 ONLY
20	84076091	1	SUPPORT, , FOR CX860 ONLY
21	86508568	1	SCREW, Hex, M6 x 16, 8.8, , BSN C479
22	84334816	1	COVER, , BSN C479
23	120100	AR	BOLT, Hex, M6 x 20, 8.8,
24	84073829	1	SHIELD, , FOR CX880 ONLY, FOR CX860 ONLY, FOR CX820, CX840 ONLY, BSN C375
24	84448964	1	SHIELD, , FOR CX820, CX840 ONLY, ASN D376
24	84448878	1	SHIELD, , FOR CX880 ONLY, FOR CX860 ONLY, ASN D376

08.21(01) ENGINE GUARDS

ссылка	Номер детали	Кол-во	Описание
24	84076070	1	PLATE, , FOR CX720, CX740, CX760, CX780 ONLY, BSN C375
24	84449148	1	PLATE, , FOR CX720, CX740, CX760, CX780 ONLY, ASN D376
25	84073784	1	SUPPORT, , FOR CX720, CX740, CX760, CX780 ONLY, FOR CX820, CX840 ONLY, FOR CX860 ONLY
25	84433483	1	SUPPORT, , FOR CX880 ONLY

08.22(01) SIGNAL PLATES

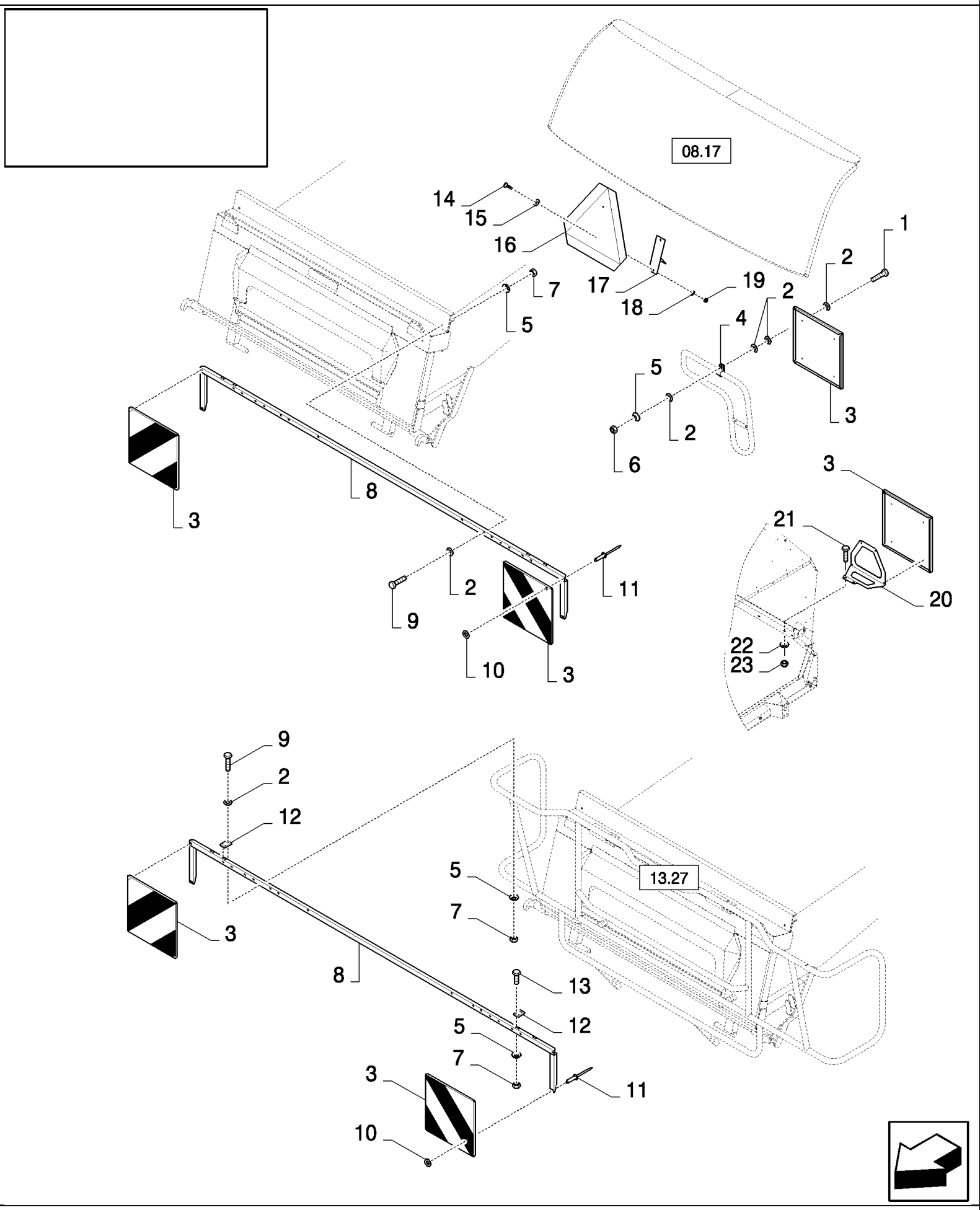

CX880 COMBINE - BASE UNIT (2/01-)

08.22(01) SIGNAL PLATES

ссылка	Номер детали	Кол-во	Описание
1	86050276	8	BOLT, Hex, M5 x 16, 8.8, Full Thd,
2	140015	34	WASHER, 6MM
3	84607381	4	PLATE,
4	84433319	8	CLAMP,
5	322357	14	WASHER, SPRING, Belleville, M6,
6	86508813	8	NUT, M5, Cl 8,
7	15896221	6	NUT, M6, Cl 10,
8	9502877	1	SUPPORT,
9	43118	2	BOLT, Hex, M6 x 40, 8.8,
10	89824840	6	WASHER, 4MM
11	NS	6	NOT SERVICED,
12	9501041	2	SUPPORT,
13	86508568	4	SCREW, Hex, M6 x 16, 8.8,
14	86511830	2	SCREW, Cross Pan Hd, M6 x 20, , FOR NA ONLY
15	140040	2	WASHER, M6 x 22 x 2, , FOR NA ONLY
16	86400906	1	WARNING TRIANGLE, , FOR NA ONLY
17	86596387	1	BRACKET, , FOR NA ONLY
18	322357	2	WASHER, SPRING, Belleville, M6, , FOR NA ONLY
19	353308	2	NUT, M6 x 1, Cl 8, , FOR NA ONLY
20	84442000	1	SUPPORT, , FOR ITALY ONLY
21	120104	2	SCREW, Hex, M8 x 20, 8.8, , FOR ITALY ONLY
22	322358	2	WASHER, SPRING, Belleville, M8, , FOR ITALY ONLY
23	89706690	2	NUT, M8, Cl 8, , FOR ITALY ONLY

08.23(01) BELT GUARDS FOR DRUM AND STRAW ELEVATOR DRIVE

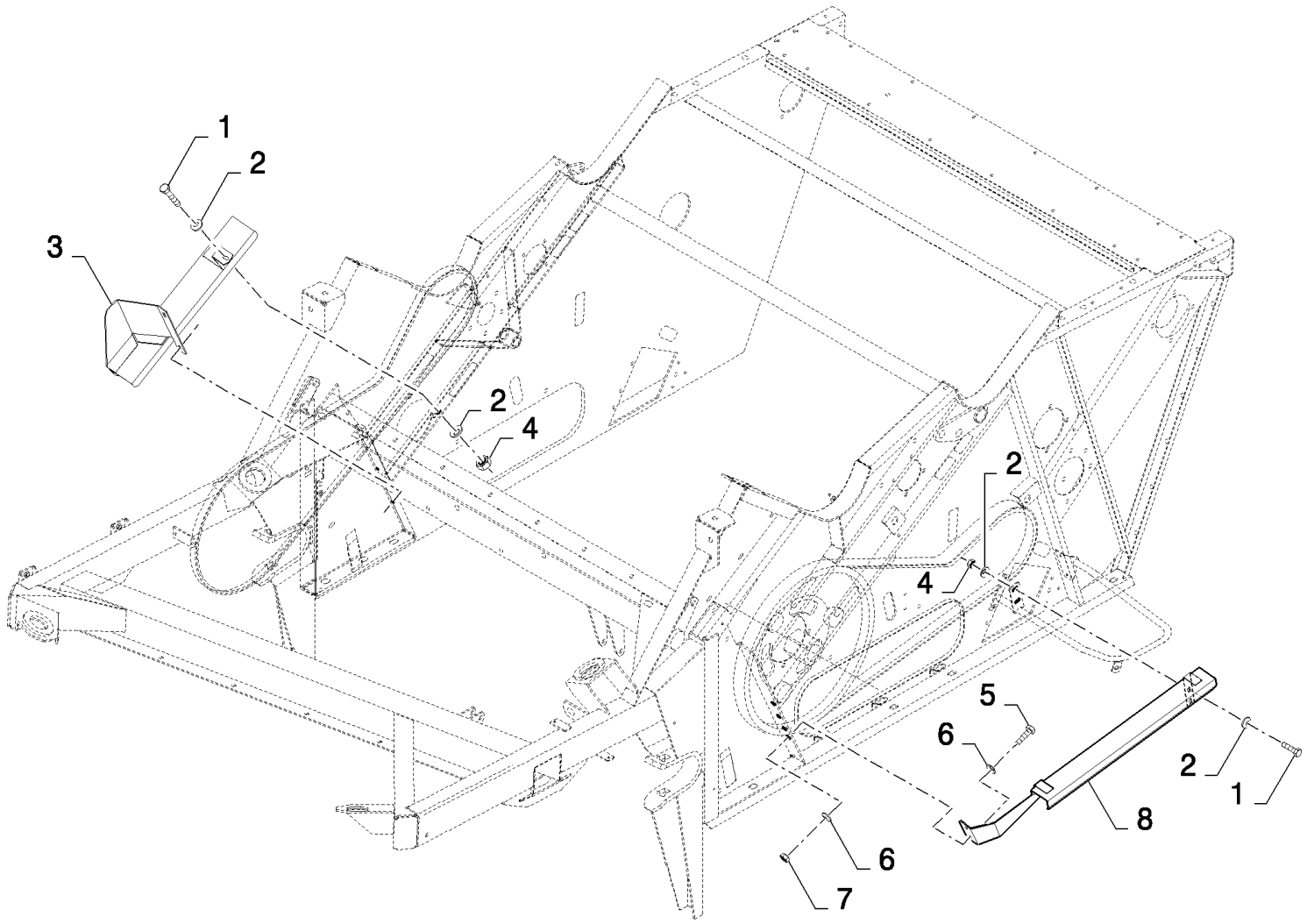

CX880 COMBINE - BASE UNIT (2/01-)

08.23(01) BELT GUARDS FOR DRUM AND STRAW ELEVATOR DRIVE

ссылка	Номер детали	Кол-во	Описание
2	412650	6	WASHER, Belleville, M8,
3	84440545	1	SHIELD,
4	89706690	3	NUT, M8, Cl 8,
5	43139	2	SCREW, Hex, M10 x 25, 8.8, Full Thd, M10x25
6	140045	4	WASHER, SPRING, Belleville, M10,
7	100016	2	NUT, M10, Cl 8,
8	84440392	1	SHIELD,
1	16043224	3	BOLT, Hex, M8 x 16, 8.8, Full Thd,

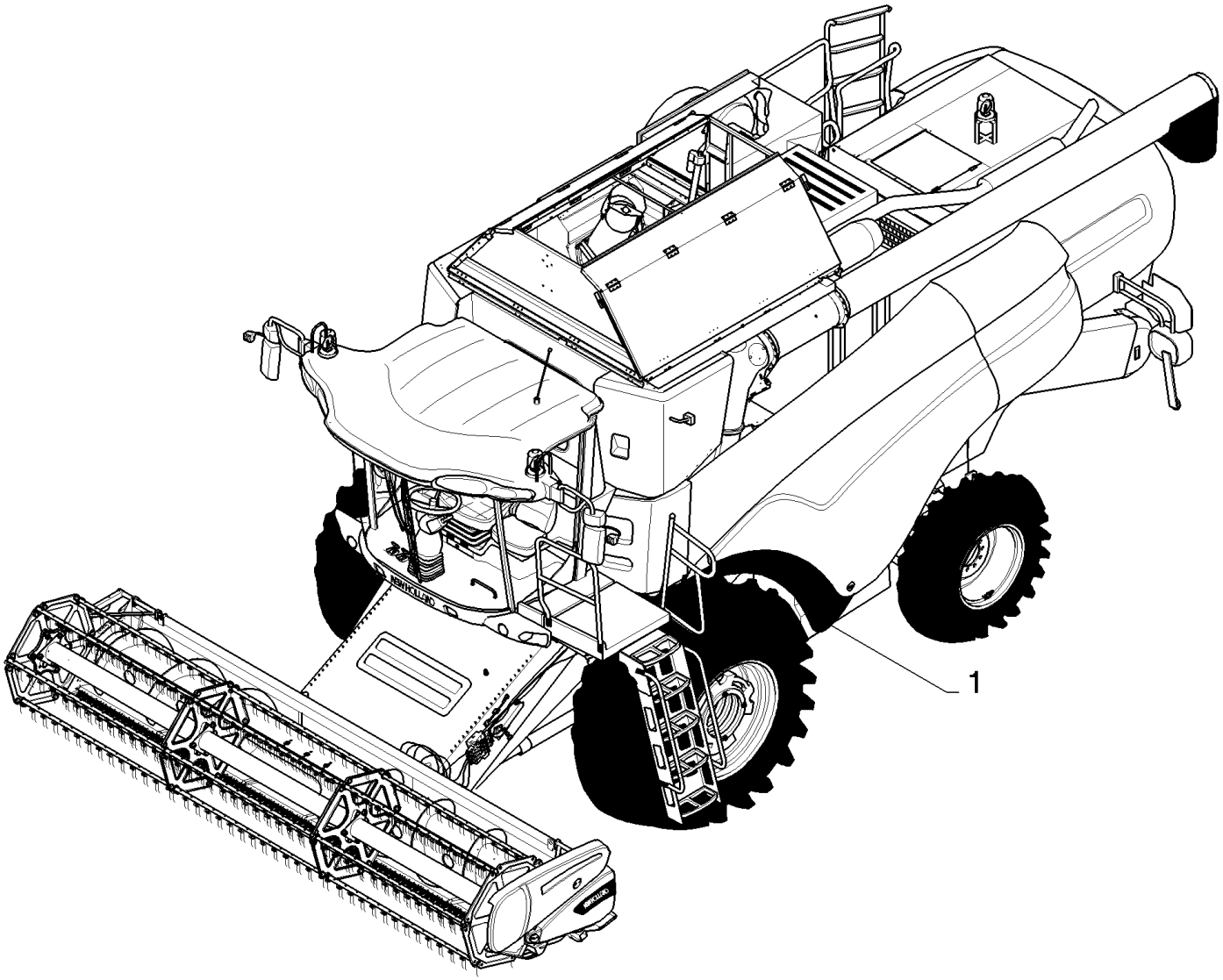
1

CX880 COMBINE - BASE UNIT (2/01-)

08.24(01) FENDERS

ссылка	Номер детали	Кол-во	Описание
1	86576647	1	FENDER ASSY., RH, NARROW, BSN C347
1	86576646	1	FENDER ASSY., LH, NARROW, BSN C347
1	86576618	1	FENDER, LH, WIDE
1	86576619	1	FENDER, RH, WIDE

08.501(01) SAFETY AND INSTRUCTION DECALS

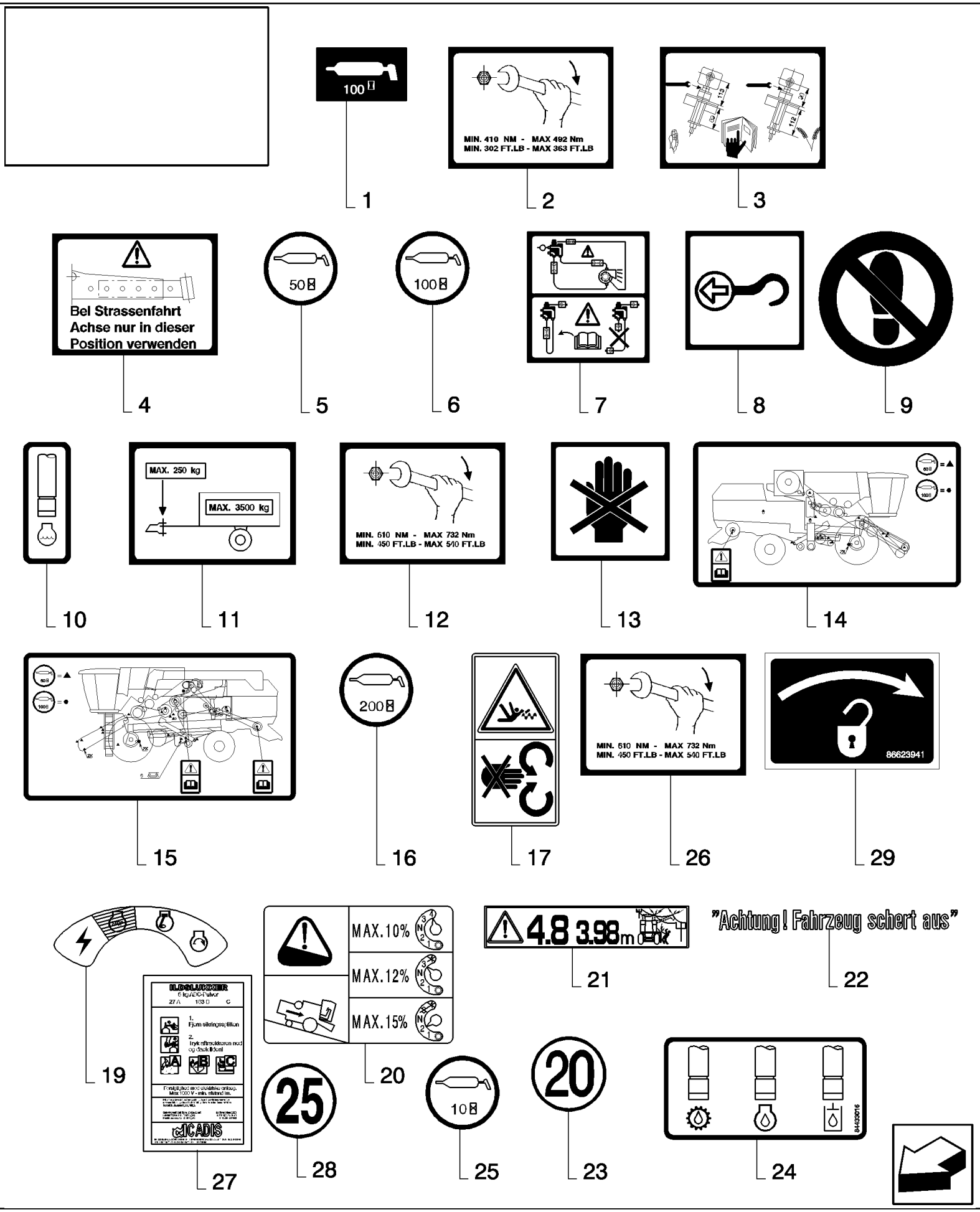

CX880 COMBINE - BASE UNIT (2/01-)

08.501(01) SAFETY AND INSTRUCTION DECALS

ссылка	Номер детали	Кол-во	Описание
1	266580	AR	IDEOGRAM,
2	84989141	AR	DECAL,
3	9507248	AR	DECAL,
4	9514663	AR	DECAL,
5	84334829	AR	DECAL,
6	84334828	AR	DECAL,
7	84433132	AR	DECAL,
8	449973	AR	DECAL,
9	84432904	AR	DECAL,
10	84433021	AR	DECAL,
11	84433130	AR	DECAL,
12	84989135	AR	DECAL,
13	84433129	AR	DECAL,
14	84433126	AR	DECAL,
15	84433127	AR	DECAL, , BSN C241
15	84441360	AR	DECAL, , BSN F242503
15	87387932	AR	DECAL, , ASN D504
16	84334810	AR	DECAL,
17	84004743	AR	DECAL,
19	86533664	AR	DECAL,
20	84439462	AR	DECAL,
21	84432862	AR	DECAL,
22	425961	AR	DECAL,
23	89513272	AR	DECAL,
24	84433016	AR	DECAL,
25	84989464	AR	DECAL,
26	84989135	AR	DECAL,
27	84442434	AR	DECAL,
28	84072701	AR	DECAL,
29	86623941	AR	DECAL,

08.502(01) SAFETY AND INSTRUCTION DECALS

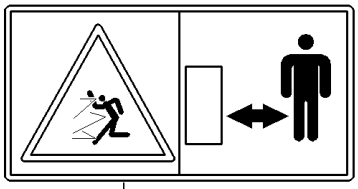

1

2

3

4

5

6

7

8

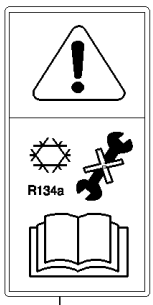

9

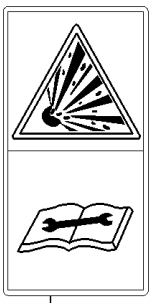

10

11

12

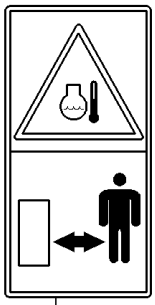

13

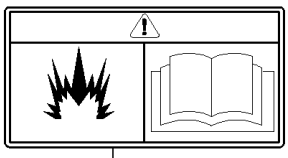

14

Background transparent

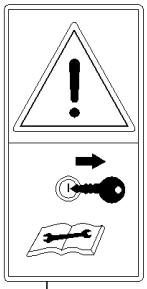

15

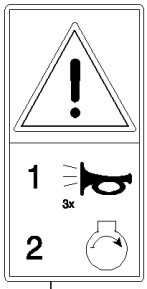

16

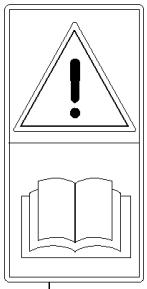

17

18

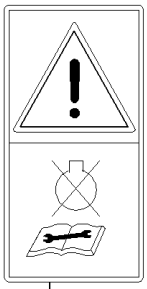

19

CX880 COMBINE - BASE UNIT (2/01-)

08.502(01) SAFETY AND INSTRUCTION DECALS

ссылка	Номер детали	Кол-во	Описание
1	84004739	AR	DECAL,
2	84004734	AR	DECAL,
3	84004735	AR	DECAL,
4	84004742	AR	DECAL,
5	84004736	AR	DECAL,
6	84078384	AR	DECAL,
7	84004740	AR	DECAL,
8	84004744	AR	DECAL,
9	84012596	AR	DECAL,
10	84005363	AR	DECAL,
11	84100296	AR	DECAL,
12	84432910	AR	DECAL,
13	84432981	AR	DECAL,
14	87802167	AR	DECAL,
15	84012893	AR	DECAL,
16	84012892	AR	DECAL,
17	84004731	AR	DECAL,
18	84004732	AR	DECAL,
19	84004733	AR	DECAL,
20	84432906	AR	DECAL,
21	84014117	AR	DECAL,
22	84011345	AR	DECAL,

08.503(01) SAFETY AND INSTRUCTION DECALS - FOR NA ONLY

5

WARNING

- Moving parts under this cover.
- DO NOT open cover while operating

Failure to comply could result in death or serious injury.

6

WARNING

SHIELD IS OPEN STAND CLEAR

Replace or close shield before operating machine.

Failure to comply could result in death or serious injury.

8

WARNING

- Hydraulic fluid under high pressure
- Read manual before attemting any service

Failure to comply couldresult in death or serious injury.

9

WARNING

Before operating machine, read operator's manual and ALL SAFETY Instructions

If manual is missing, contact your dealer or service department.

1. Before starting machine or operation, clear area of bystanders.
2. Disengage drives including PTO. Stop engine, wait for all equipment to stop before leaving operator's position.
3. Keep all shields in place, keep hands, feet, clothing and hair away from moving parts.
4. Keep riders off machines.
5. Use Slow-Moving vehicle (SMV) identification emblem and flashing warning lights when operating on highways, except when prohibited by law.
6. Never adjust, lubricate, clean or unplug machine with engine running.

Failure to comply couldresult in death or serious injury.

3

DANGER

- Rotatingauger under this cover.
- Keep hands out when machine is running.

Failure to comply couldresult in death or serious injury.

4

WARNING

STAND CLEAR

- Rotating flails under hood: Crop materials exiting at high speed.
- STOP machine, LOOK, LISTEN, and WAIT for all movement to stop before approaching.

Failure to comply could result in death or serious injury.

1

WARNING

- Rotating augers.
- DO NOT enter grain tank with machine running.

Failure to comply could result in death or serious injury.

11

WARNING

Always fasten seatbelt during operation

Failure to comply couldresult in death or serious injury.

12

DANGER

Avoid contact with electrical power lines.

Failure to comply will result in death or serious injury.

10

WARNING

3 X's

1st

2nd

Before starting engine or any function.

- Warn bystanders
- Sound horn 3 times.

Failure to comply couldresult in death or serious injury.

14

WARNING

- Moving parts under this cover.
- DO NOT open cover while operating.

Failure to comply could result in death or serious injury.

16

WARNING

INSTRUCTIONAL SEAT

- To be used for training or diagnostic purposes.
- Extra riders espesially childeren are NOT permitted on machine
- Buckle up!

Failure to comply couldresult in death or serious injury.

7

DANGER

- Header/feeder will fall rapidely if hydraulic lift system should fail.
- Rest header/feeder on ground or engage lift cylinder lock onto when working around raised header/feeder.

Failure to comply couldresult in death or serious injury.

13

DANGER

DO NOT use other starting fluid AN EXPLOSION MAY OCCUR.

Failure to comply couldresult in death or serious injury.

15

84432938

17

84026833

2

WARNING

Keep hands and clothing away from rotating tan and bolts. Failure to comply could result in death or serious injury.

18

1 2 AUX

CX880 COMBINE - BASE UNIT (2/01-)

08.503(01) SAFETY AND INSTRUCTION DECALS - FOR NA ONLY

ссылка	Номер детали	Кол-во	Описание
1	86640423	AR	DECAL, WARNING,
2	86501511	AR	DECAL, WARNING,
3	86640420	AR	DECAL, DANGER,
4	86640441	AR	DECAL, WARNING,
5	86626958	AR	DECAL,
6	86626959	AR	DECAL,
7	86624774	AR	DECAL, DANGER,
8	86640435	AR	DECAL, WARNING,
9	86622073	AR	DECAL, WARNING,
10	86640432	AR	DECAL, WARNING,
11	86640447	AR	DECAL, WARNING,
12	86640429	AR	DECAL, DANGER,
13	629086	AR	DECAL,
14	86640444	AR	DECAL,
15	84432998	AR	DECAL,
16	86640438	AR	DECAL,
17	84026833	AR	DECAL,
18	86640426	AR	DECAL,

08.504(01) SAFETY AND INSTRUCTION DECALS - FOR RUSSIA ONLY

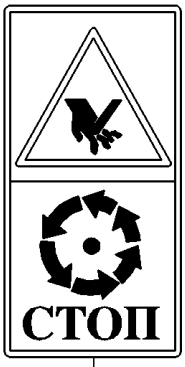

1

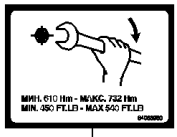

2

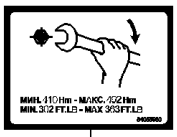

3

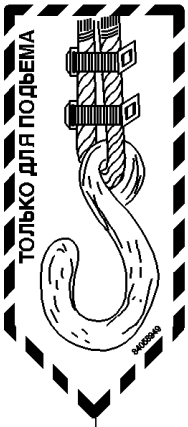

4

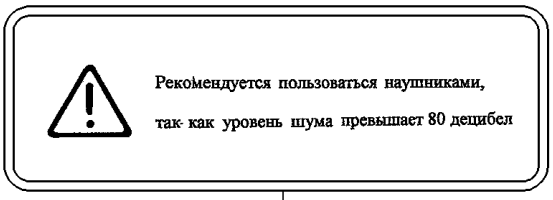

6

5

7

CX880 COMBINE - BASE UNIT (2/01-)

08.504(01) SAFETY AND INSTRUCTION DECALS - FOR RUSSIA ONLY

ссылка	Номер детали	Кол-во	Описание
1	84062737	AR	DECAL,
2	84058950	AR	DECAL,
3	84429339	AR	DECAL,
4	84058949	AR	DECAL,
5	84072135	AR	DECAL,
6	84429052	AR	DECAL,
7	84072701	AR	DECAL,

08.505(01) COMMERCIAL DECALS

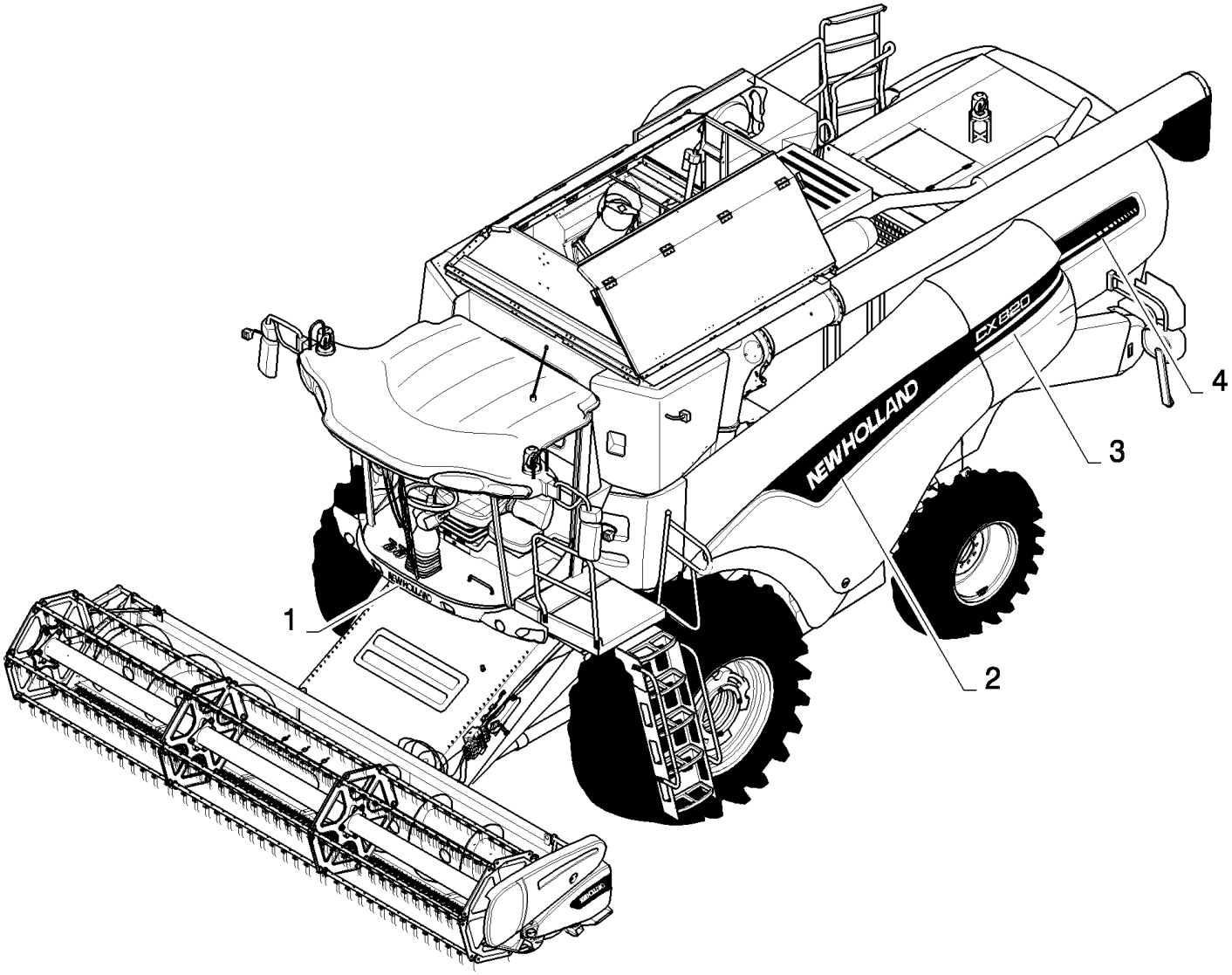

5

6

CX880 COMBINE - BASE UNIT (2/01-)

08.505(01) COMMERCIAL DECALS

ссылка	Номер детали	Кол-во	Описание
1	86521461	1	DECAL,
2	84429929	1	DECAL, RH
2	84429928	1	DECAL, LH
3	84429927	1	DECAL, RH, FOR CX720 ONLY
3	84429933	1	DECAL, RH, FOR CX740 ONLY
3	84429935	1	DECAL, RH, FOR CX760 ONLY
3	84429937	1	DECAL, RH, FOR CX780 ONLY
3	84429939	1	DECAL, RH, FOR CX820 ONLY
3	84429941	1	DECAL, RH, FOR CX840 ONLY
3	84429943	1	DECAL, RH, FOR CX860 ONLY
3	84429945	1	DECAL, RH, FOR CX880 ONLY
3	84429926	1	DECAL, LH, FOR CX720 ONLY
3	84429932	1	DECAL, LH, FOR CX740 ONLY
3	84429934	1	DECAL, LH, FOR CX760 ONLY
3	84429936	1	DECAL, LH, FOR CX780 ONLY
3	84429938	1	DECAL, LH, FOR CX820 ONLY
3	84429940	1	DECAL, LH, FOR CX840 ONLY
3	84429942	1	DECAL, LH, FOR CX860 ONLY
3	84429944	1	DECAL, LH, FOR CX880 ONLY
4	84429931	1	DECAL, RH
4	84429930	1	DECAL, LH
5	82031728	1	DECAL, Branding
6	87802951	1	EMBLEM,

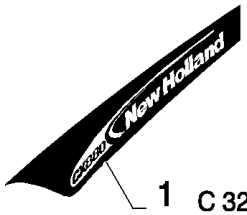

1 C 323

1 D 324

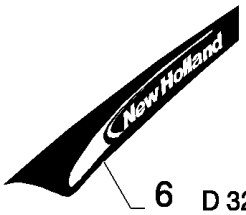

6 D 324

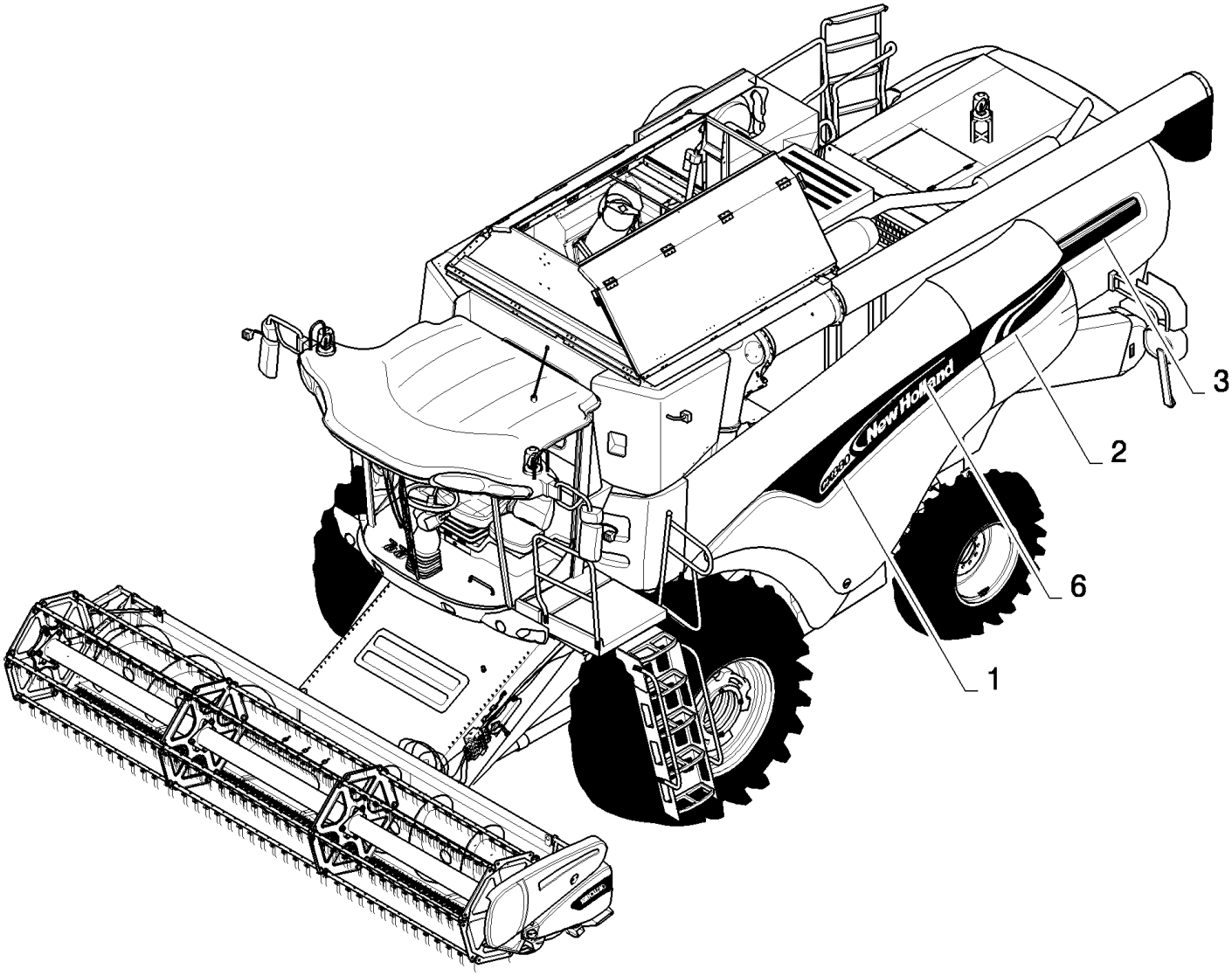

4

5

CX880 COMBINE - BASE UNIT (2/01-)

08.506(01) COMMERCIAL DECALS

ссылка	Номер детали	Кол-во	Описание
1	84443977	1	DECAL, LH, FOR CX720 ONLY, BSN C323
1	84447736	1	DECAL, LH, FOR CX720 ONLY, ASN D324
1	84443978	1	DECAL, RH, FOR CX720 ONLY, BSN C323
1	84447737	1	DECAL, RH, FOR CX720 ONLY, ASN D324
1	84443979	1	DECAL, LH, FOR CX740 ONLY, BSN C323
1	84447738	1	DECAL, LH, FOR CX740 ONLY, ASN D324
1	84443980	1	DECAL, RH, FOR CX740 ONLY, BSN C323
1	84447739	1	DECAL, RH, FOR CX740 ONLY, ASN D324
1	84443981	1	DECAL, LH, FOR CX760 ONLY, BSN C323
1	84447740	1	DECAL, LH, FOR CX760 ONLY, ASN D324
1	84443982	1	DECAL, RH, FOR CX760 ONLY, BSN C323
1	84447741	1	DECAL, RH, FOR CX760 ONLY, ASN D324
1	84443983	1	DECAL, LH, FOR CX780 ONLY, BSN C323
1	84447742	1	DECAL, LH, FOR CX780 ONLY, ASN D324
1	84443984	1	DECAL, RH, FOR CX780 ONLY, BSN C323
1	84447743	1	DECAL, RH, FOR CX780 ONLY, ASN D324
1	84443985	1	DECAL, LH, FOR CX820 ONLY, BSN C323
1	84447744	1	DECAL, LH, FOR CX820 ONLY, ASN D324
1	84443986	1	DECAL, RH, FOR CX820 ONLY, BSN C323
1	84447745	1	DECAL, RH, FOR CX820 ONLY, ASN D324
1	84443987	1	DECAL, LH, FOR CX840 ONLY, BSN C323
1	84447746	1	DECAL, LH, FOR CX840 ONLY, ASN D324
1	84443988	1	DECAL, RH, FOR CX840 ONLY, BSN C323
1	84447747	1	DECAL, RH, FOR CX840 ONLY, ASN D324
1	84443989	1	DECAL, LH, FOR CX860 ONLY, BSN C323
1	84447748	1	DECAL, LH, FOR CX860 ONLY, ASN D324
1	84443990	1	DECAL, RH, FOR CX860 ONLY, BSN C323
1	84447749	1	DECAL, RH, FOR CX860 ONLY, ASN D324
1	84443991	1	DECAL, LH, FOR CX880 ONLY, BSN C323
1	84447750	1	DECAL, LH, FOR CX880 ONLY, ASN D324
1	84443992	1	DECAL, RH, FOR CX880 ONLY, BSN C323
1	84447751	1	DECAL, RH, FOR CX880 ONLY, ASN D324
2	84443973	1	DECAL, LH, BSN C411
2	84459518	1	DECAL, LH, ASN D412
2	84443975	1	DECAL, RH
3	84443974	1	DECAL, LH
3	84443976	1	DECAL, RH
4	82031728	1	DECAL, Branding
5	87802951	1	EMBLEM, , BSN C371
5	87802965	1	EMBLEM, , ASN D372
6	84447734	1	DECAL, LH, ONLY WITH NEW HOLLAND, ASN D324
6	84447735	1	DECAL, RH, ONLY WITH NEW HOLLAND, ASN D324

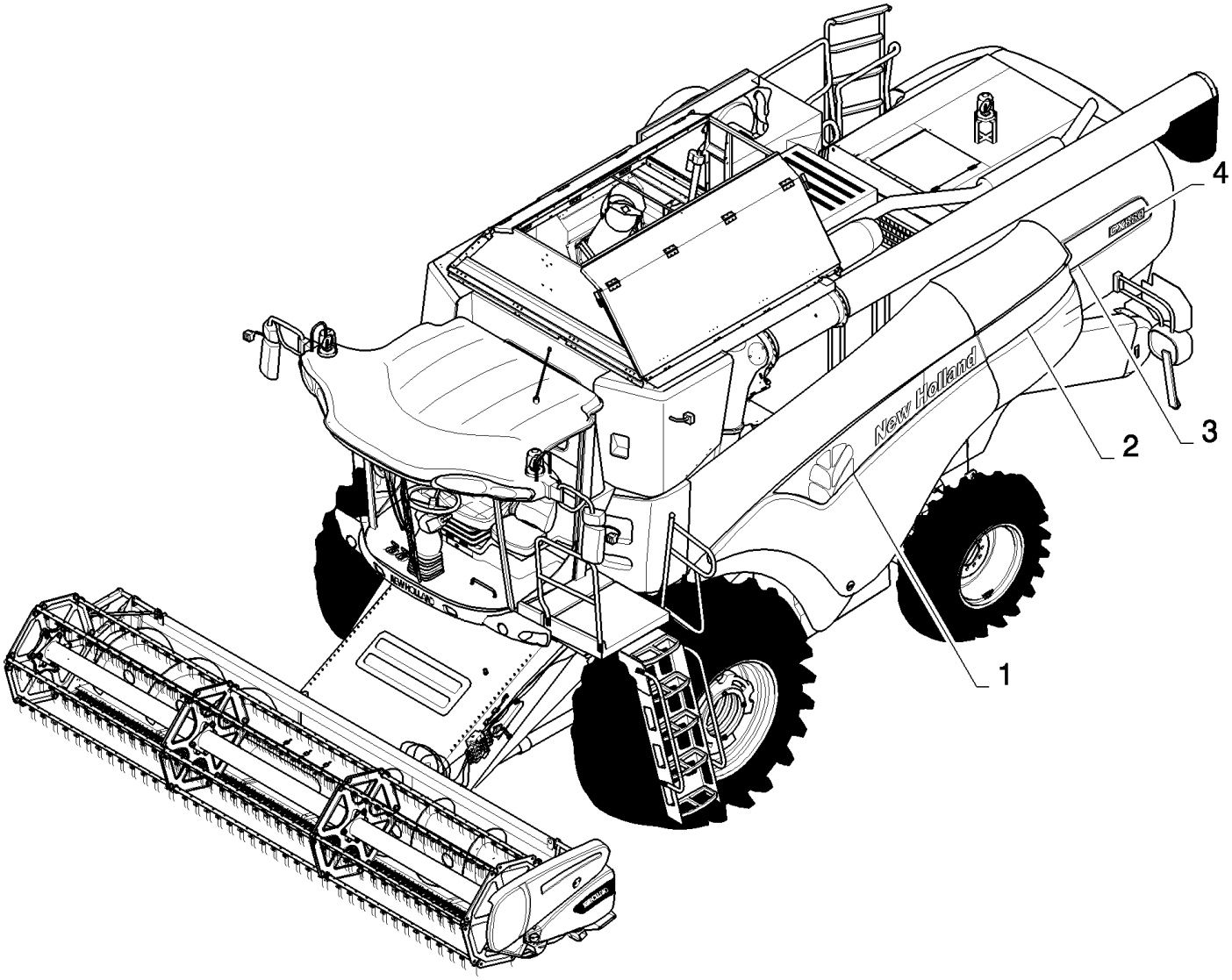

5

6

CX880 COMBINE - BASE UNIT (2/01-)

08.507(01) COMMERCIAL DECALS

ссылка	Номер детали	Кол-во	Описание
1	84457915	1	DECAL, LH
1	84457916	1	DECAL, RH
2	84457911	1	DECAL, LH, BSN C411
2	84459519	1	DECAL, LH, ASN D412
2	84457913	1	DECAL, RH
3	84457912	1	DECAL, LH
3	84457914	1	DECAL, RH
4	84457917	2	DECAL, , FOR CX720 ONLY
4	84457919	2	DECAL, , FOR CX740 ONLY
4	84457921	2	DECAL, , FOR CX760 ONLY
4	84457923	2	DECAL, , FOR CX780 ONLY
4	84457925	2	DECAL, , FOR CX820 ONLY
4	84457927	2	DECAL, , FOR CX840 ONLY
4	84457930	2	DECAL, , FOR CX860 ONLY
4	84457932	2	DECAL, , FOR CX880 ONLY
5	82031728	1	DECAL,
6	87802965	1	EMBLEM,

08.508(01) REFLECTORS

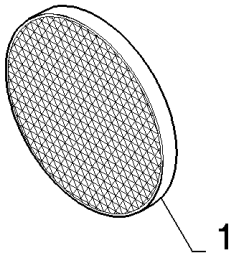

08.508(01) REFLECTORS

ссылка	Номер детали	Кол-во	Описание
1	435895	AR	REFLECTOR, YELLOW
1	437024	AR	REFLECTOR, RED

CAB	**CABINE**	**CABINA**	**CAB**
CABINA	**KABINE**	**CABINA**	**CABINE**

SEC. 10

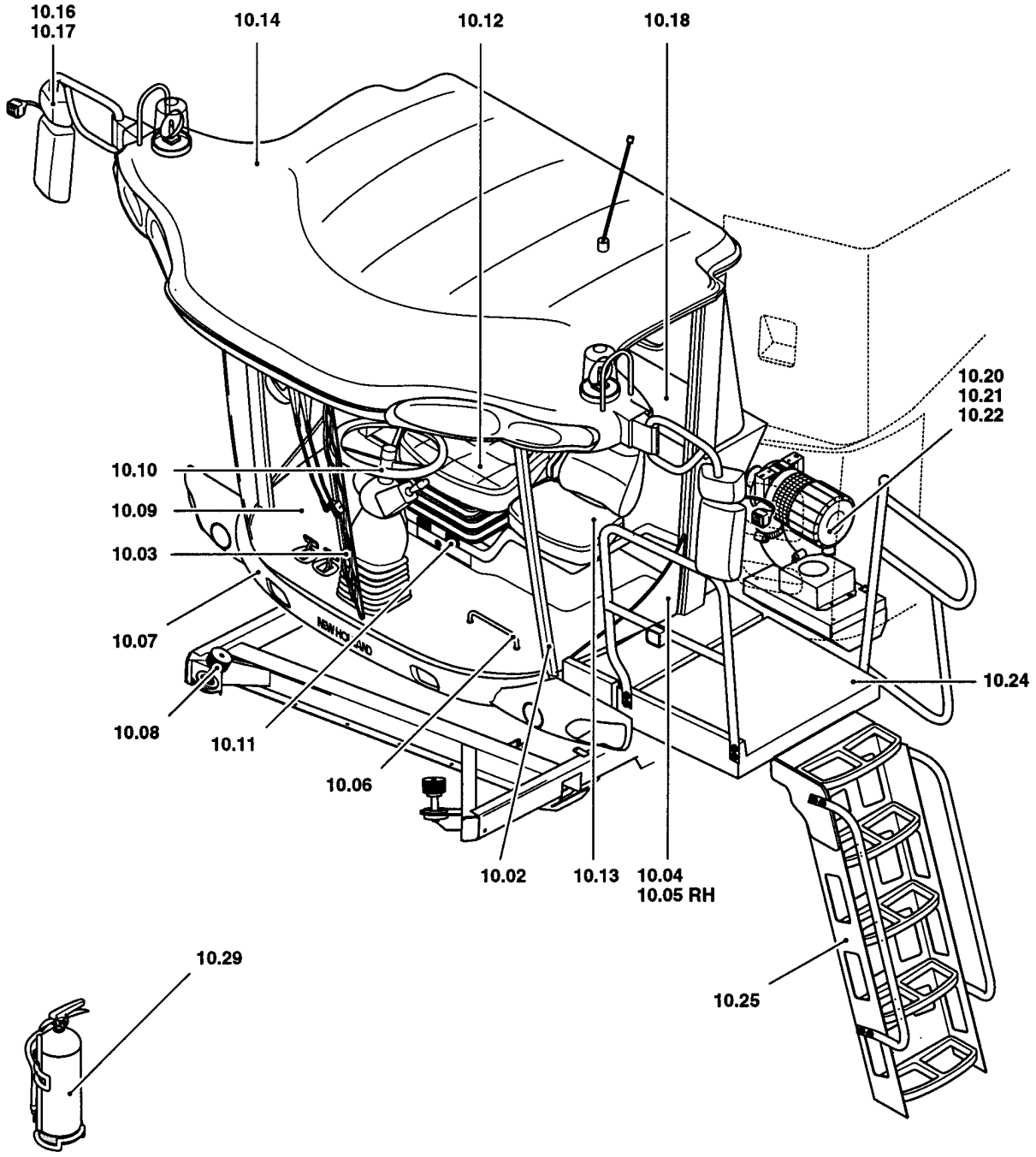

ссылка	Номер детали	Кол-во	Описание

10.01(01) INSTRUMENTS IN CAB

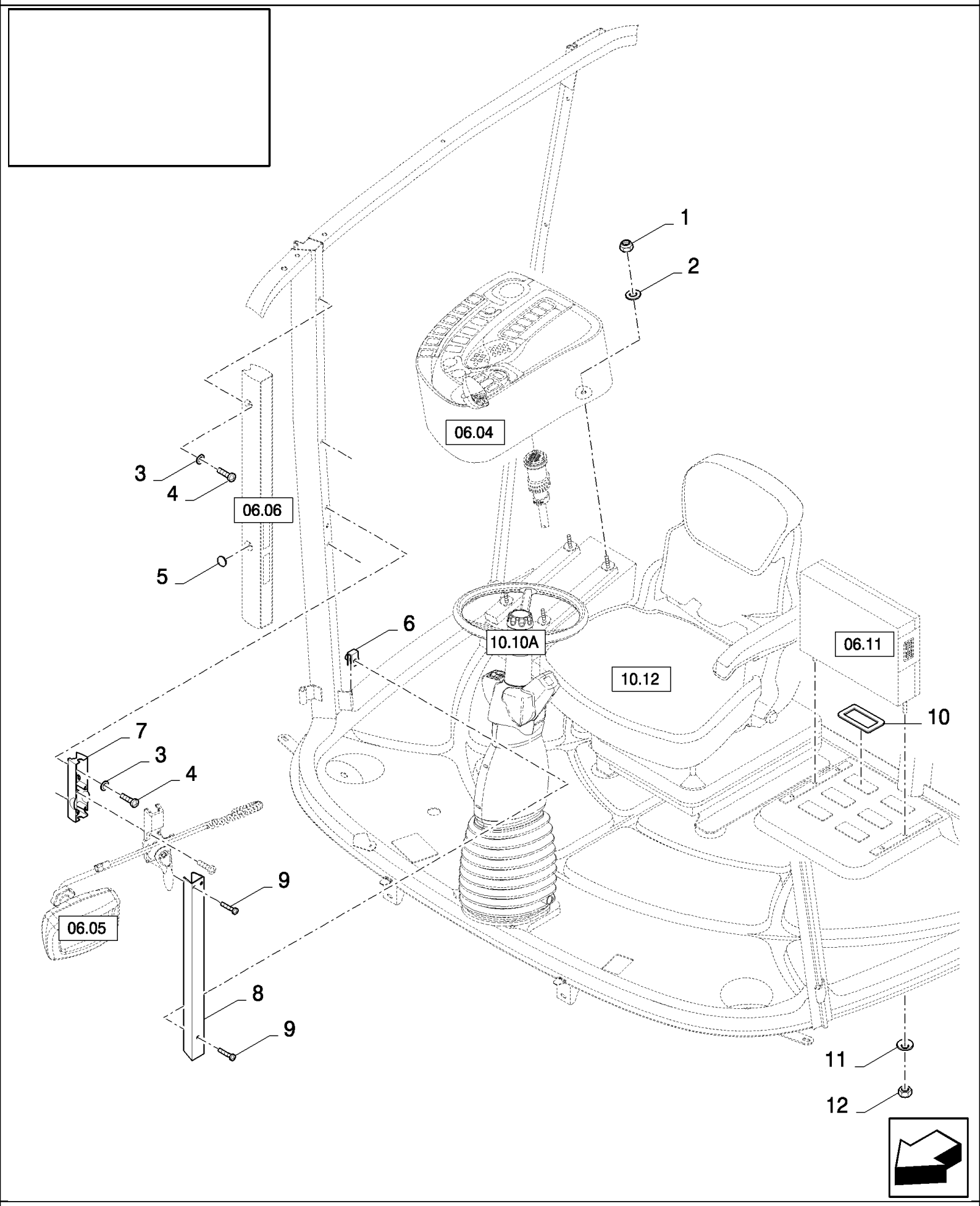

CX880 COMBINE - BASE UNIT (2/01-)

10.01(01) INSTRUMENTS IN CAB

ссылка	Номер детали	Кол-во	Описание
1	86629542	4	NUT, LOCK, M8 x 1.25, Cl 8,
2	140041	4	WASHER, M8 x 28 x 3,
3	448889	5	WASHER,
4	84073086	5	SCREW, M6x20
5	86619911	2	PLUG, , BSN C419
5	84454689	2	PLUG, , ASN D420
6	9628100	1	NUT,
7	84061201	1	BRACKET,
8	84059810	1	COVER,
9	9844205	3	SCREW,
10	87011216	4	SEAL, RUBBER,
11	322358	4	WASHER, SPRING, Belleville, M8,
12	89706690	4	NUT, M8, Cl 8,

10.02(01) CAB FRAME

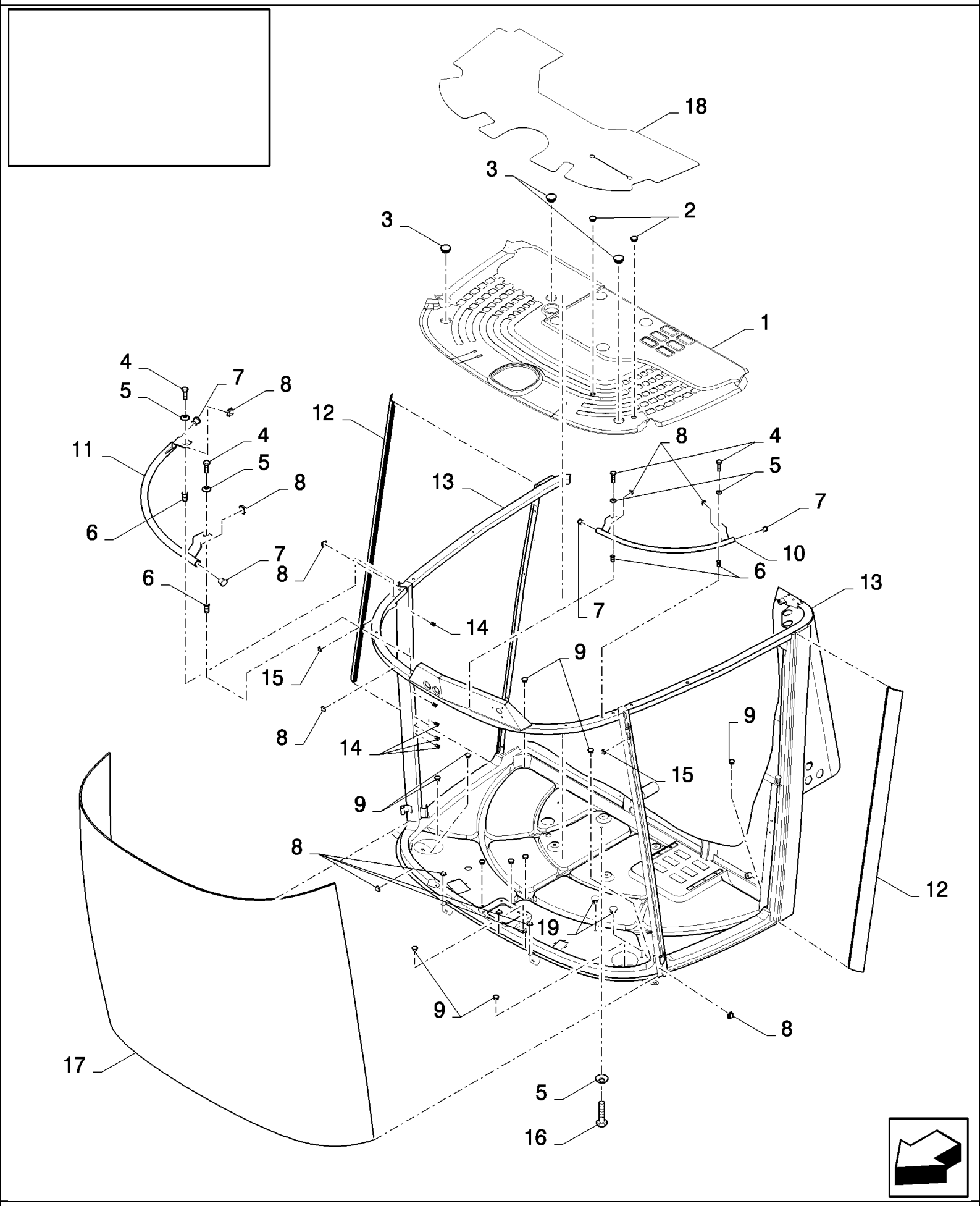

CX880 COMBINE - BASE UNIT (2/01-)

10.02(01) CAB FRAME

ссылка	Номер детали	Кол-во	Описание
1	86520776	1	MAT, FLOOR,
2	84067981	2	PLUG,
3	84067943	3	PLUG,
4	412479	4	BOLT, Hex, M8 x 35, 8.8,
5	322358	6	WASHER, SPRING, Belleville, M8,
6	84073973	4	NUT, CONTROL,
7	84989341	4	PLUG,
8	9818501	48	PLUG, Sq, Plastic,
9	80436173	10	
10	84072986	1	HANDRAIL, LH, BSN C315
10	87001000	1	HANDRAIL, LH, ASN D316
11	84072990	1	HANDRAIL, RH, BSN C315
11	87000998	1	HANDRAIL, RH, ASN D316
12	84057080	2	SEAL,
13	84320353	1	FRAME, CAB, , BSN C273
13	84441995	1	FRAME, CAB, , ASN D274
14	84432314	5	NUT,
15	9992358	10	ELASTIC STOP,
17	84057195	1	GLASS, CAB,
18	84440713	1	PLATE,
19	84440697	2	PLUG,
16	16043224	2	BOLT, Hex, M8 x 16, 8.8, Full Thd,

10.03(01) WINDSCREEN WIPER

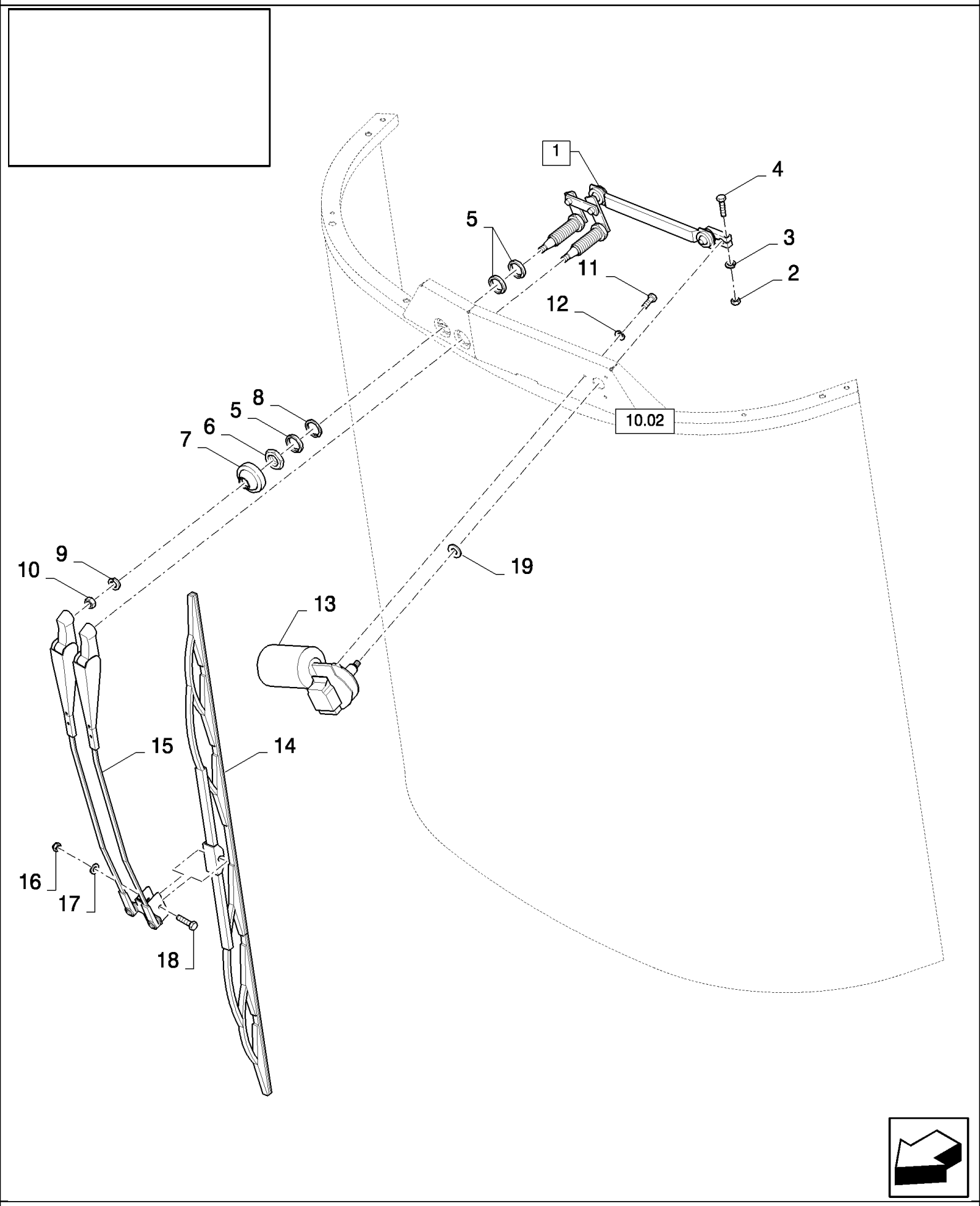

CX880 COMBINE - BASE UNIT (2/01-)

10.03(01) WINDSCREEN WIPER

ссылка	Номер детали	Кол-во	Описание
1	84061267	1	ARM, (2 to 10)
2	353308	1	NUT, M6 x 1, Cl 8,
3	140015	1	WASHER, 6MM
4	43117	1	BOLT, Hex, M6 x 30, 8.8,
5	84431243	6	RING,
6	412569	2	NUT, M26 x 1, Cl 8, M26
7	84431242	2	PROTECTING COVER,
8	412568	2	WASHER, 26MM
9	140045	2	WASHER, SPRING, Belleville, M10,
10	100016	2	NUT, M10, Cl 8,
11	86508568	3	SCREW, Hex, M6 x 16, 8.8,
12	322357	3	WASHER, SPRING, Belleville, M6,
13	84431950	1	WIPER MOTOR,
14	84007417	1	WIPER BLADE,
15	86542153	1	WIPER ARM,
16	353308	1	NUT, M6 x 1, Cl 8,
17	140015	1	WASHER, 6MM
18	43117	1	BOLT, Hex, M6 x 30, 8.8,
19	87019751	1	SEAL,

10.04(01) DOOR, LH

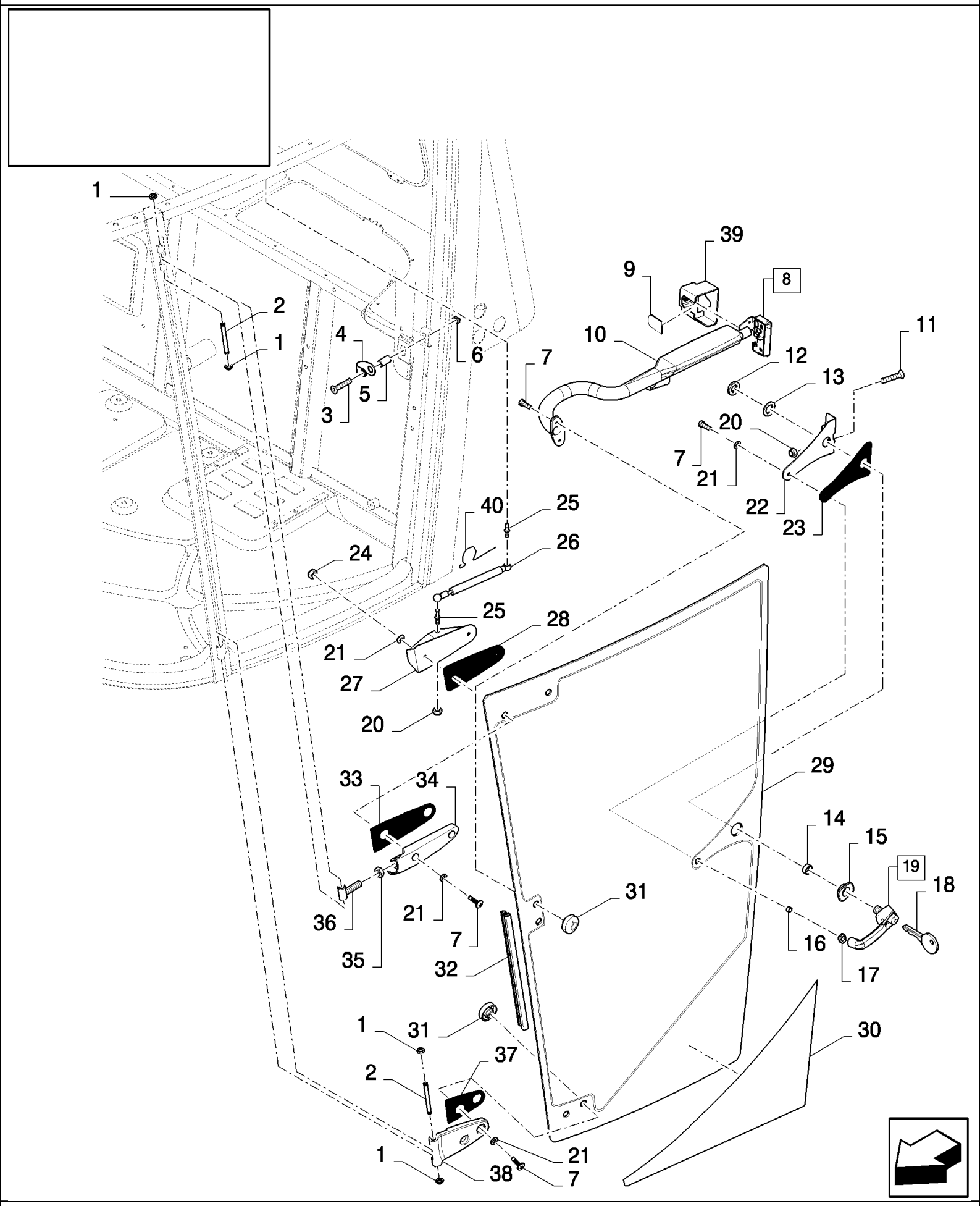

CX880 COMBINE - BASE UNIT (2/01-)

10.04(01) DOOR, LH

ссылка	Номер детали	Кол-во	Описание
1	431021	4	WASHER, SPECIAL,
2	84607358	2	PIN,
3	84320291	1	SCREW, Hex Soc Flat Hd, M8 x 45, 8.8,
4	84067949	1	SUPPORT,
5	84076428	1	STOP,
6	84073940	1	NUT,
7	84073086	AR	SCREW, M6x20
7	84007540	AR	SCREW, M6x25
8	84067947	1	HANDLE GRIP, (9,10)
9	84067945	1	COVER,
10	84320301	1	HANDLE, COVER
11	300352	2	SCREW, Hex Flat Hd, M8 x 40, 4.8,
12	84989695	1	NUT,
13	84989694	1	WASHER,
14	84064278	1	SPACER,
15	86521017	1	GASKET,
16	84989696	1	SPACER,
17	86531231	1	GASKET,
18	84989693	1	KEY, DOOR LOCK,
19	84429659	1	HANDLE, (12 to 18)
20	86629542	3	NUT, LOCK, M8 x 1.25, Cl 8,
21	84072877	7	WASHER, 6MM
22	84320292	1	BRACKET,
23	86521015	1	SEAL,
24	86500656	2	NUT, LOCK, M6 x 1, Cl 8, M6
25	9706807	2	STUD,
26	84320293	1	GAS STRUT,
27	84072227	1	SUPPORT, , BSN C281
27	84442720	1	SUPPORT, , ASN D282
28	84064222	1	SEAL,
29	84057845	1	GLASS, CAB, , BSN C237
29	84440387	1	GLASS, CAB, , ASN D238
30	84059844	1	DECAL,
31	86531235	4	BUSHING,
32	84057848	1	SEAL, RUBBER,
33	84057937	1	SEAL,
34	84061311	1	HINGE,
35	84061314	1	NUT, M16 x 2, Cl 8,
36	84607170	1	HINGE,
37	84057936	1	SEAL,
38	84061312	1	HINGE,
39	84067944	1	COVER,
40	86999310	2	CLIP,

10.05(01) DOOR, RH

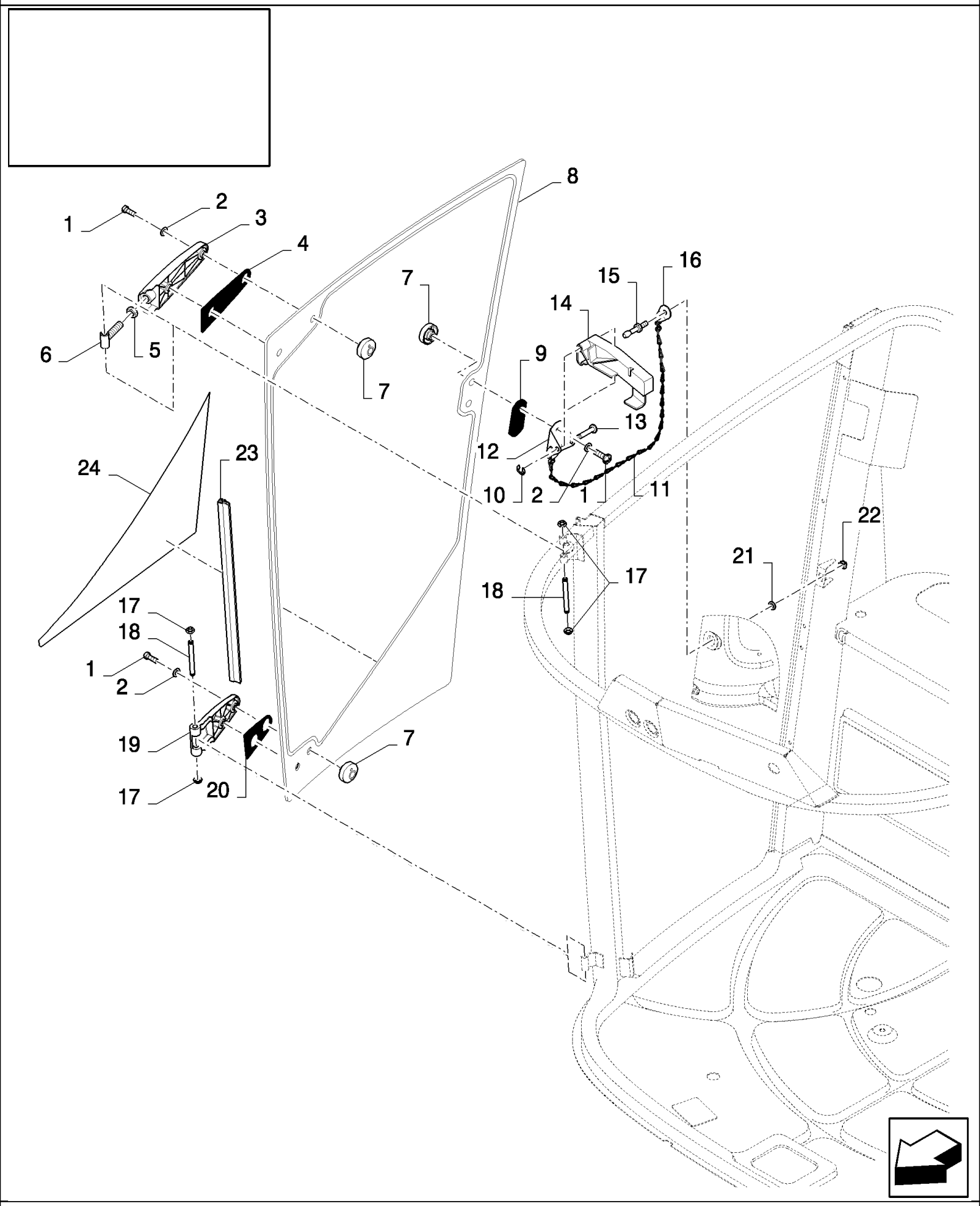

CX880 COMBINE - BASE UNIT (2/01-)

10.05(01) DOOR, RH

ссылка	Номер детали	Кол-во	Описание
1	84073086	6	SCREW, M6x20
2	84072877	6	WASHER, 6MM
3	84061311	1	HINGE,
4	84057937	1	SEAL,
5	84061314	1	NUT, M16 x 2, Cl 8,
6	84607170	1	HINGE,
7	86531235	6	BUSHING,
8	84057846	1	GLASS, CAB, , BSN C237
8	84440388	1	GLASS, CAB, , ASN D238
9	84057939	1	SEAL PROTECTION,
10	83971493	1	CIRCLIP,
11	84059889	1	CHAIN,
12	84434979	1	BRACKET,
13	84320278	1	PIN,
14	83992583	1	HANDLE,
15	84434978	1	PIN,
16	86600939	1	BRACKET,
17	431021	4	WASHER, SPECIAL,
18	84607358	2	PIN,
19	84061313	1	HINGE,
20	84057936	1	SEAL,
21	84434981	1	SPACER,
22	84072841	1	NUT,
23	84057848	1	SEAL, RUBBER,
24	84059845	1	DECAL,

10.06(01) FEET SUPPORT

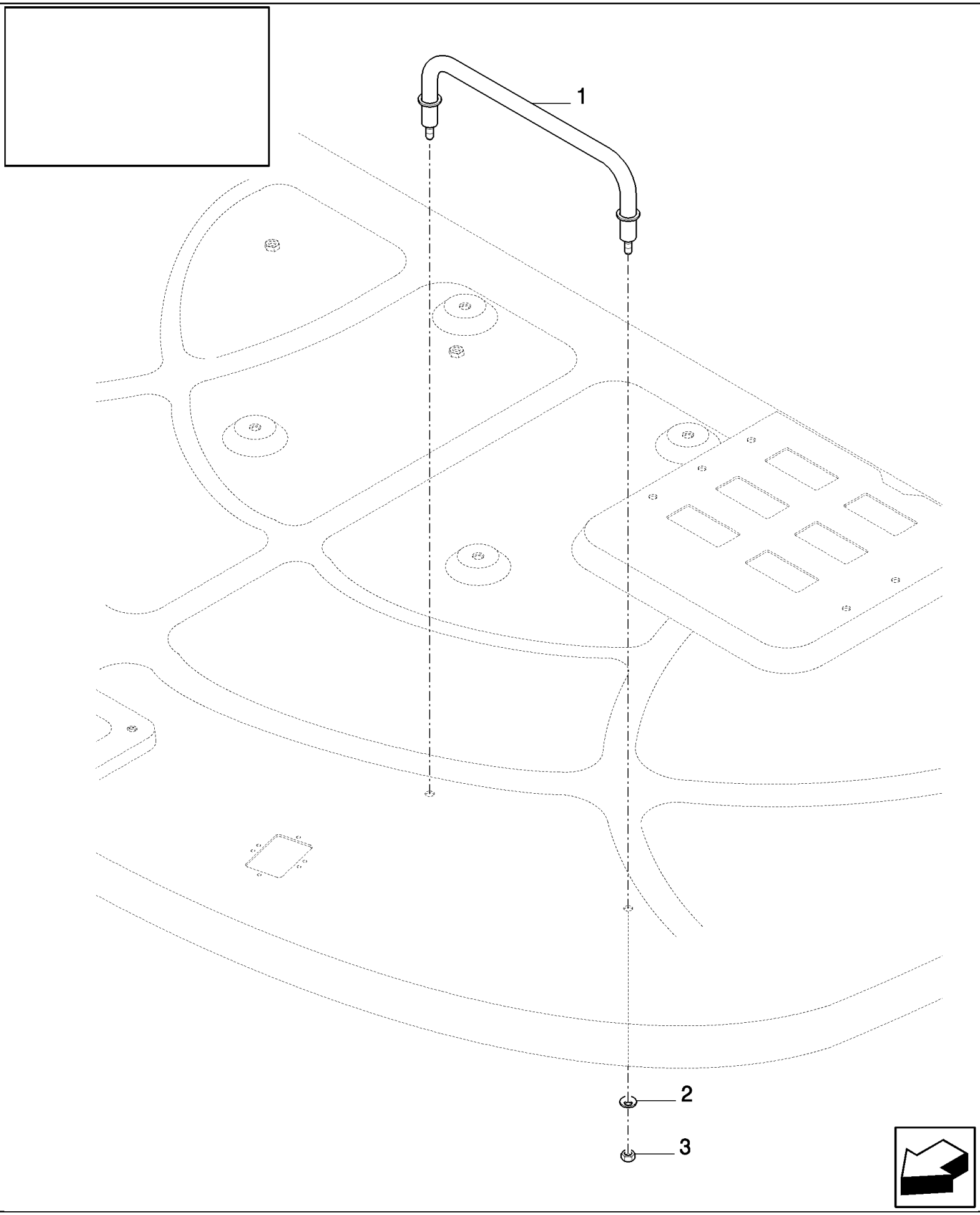

CX880 COMBINE - BASE UNIT (2/01-)

10.06(01) FEET SUPPORT

ссылка	Номер детали	Кол-во	Описание
1	84072653	1	FOOT REST,
2	322358	2	WASHER, SPRING, Belleville, M8,
3	89706690	2	NUT, M8, Cl 8,

10.07(01) HEADLIGHTS

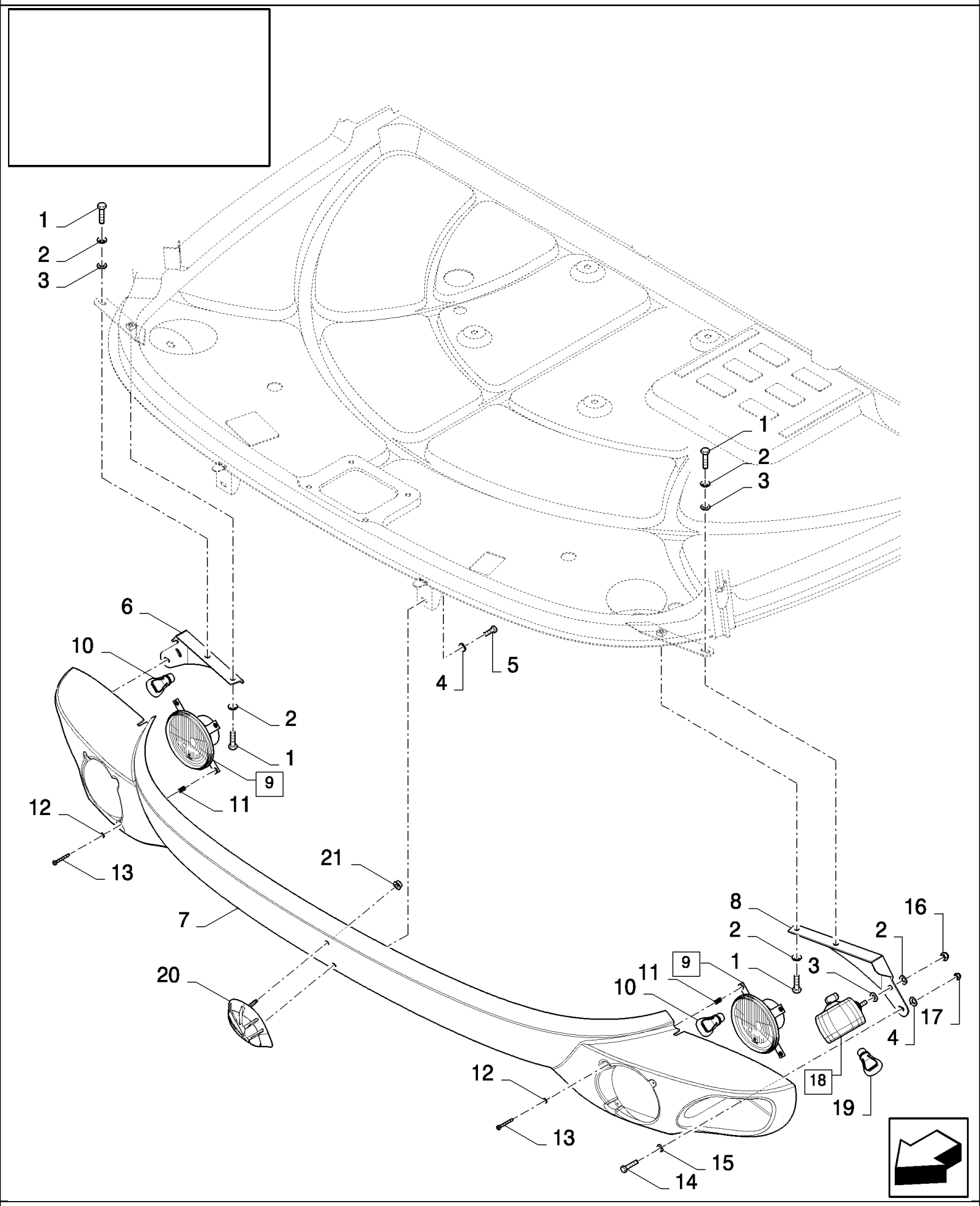

CX880 COMBINE - BASE UNIT (2/01-)

10.07(01) HEADLIGHTS

ссылка	Номер детали	Кол-во	Описание
1	43127	4	BOLT, Hex, M8 x 25, 8.8,
2	322358	6	WASHER, SPRING, Belleville, M8,
3	140041	4	WASHER, M8 x 28 x 3,
4	322357	4	WASHER, SPRING, Belleville, M6,
5	43113	2	BOLT, M6x12
6	84077180	1	SUPPORT,
7	84320209	1	COVER,
8	84077179	1	SUPPORT,
9	84067914	2	HEADLAMP, (10 to 13)
9	84067913	2	HEADLAMP, (10 to 13), FOR UK AND AUSTRALIA ONLY
10	446592	1	BULB, 12V, 60/55W HALOGEN
11	84429835	3	SPRING,
12	140014	3	WASHER, M5 x 10 x 1,
13	84429834	3	SCREW,
14	120100	2	BOLT, Hex, M6 x 20, 8.8,
15	140040	2	WASHER, M6 x 22 x 2,
16	86629542	2	NUT, LOCK, M8 x 1.25, Cl 8,
17	353308	2	NUT, M6 x 1, Cl 8,
18	84067907	2	LAMP, WORK, (19)
19	9847313	1	BULB, #894, 12V, 37.5W, 12V, 37.5W HALOGEN
20	87107714	1	EMBLEM, , ASN D316
21	86625060	2	NUT, Self, Threading, 1/4", , ASN D316

10.08(01) MOUNTING GROUP

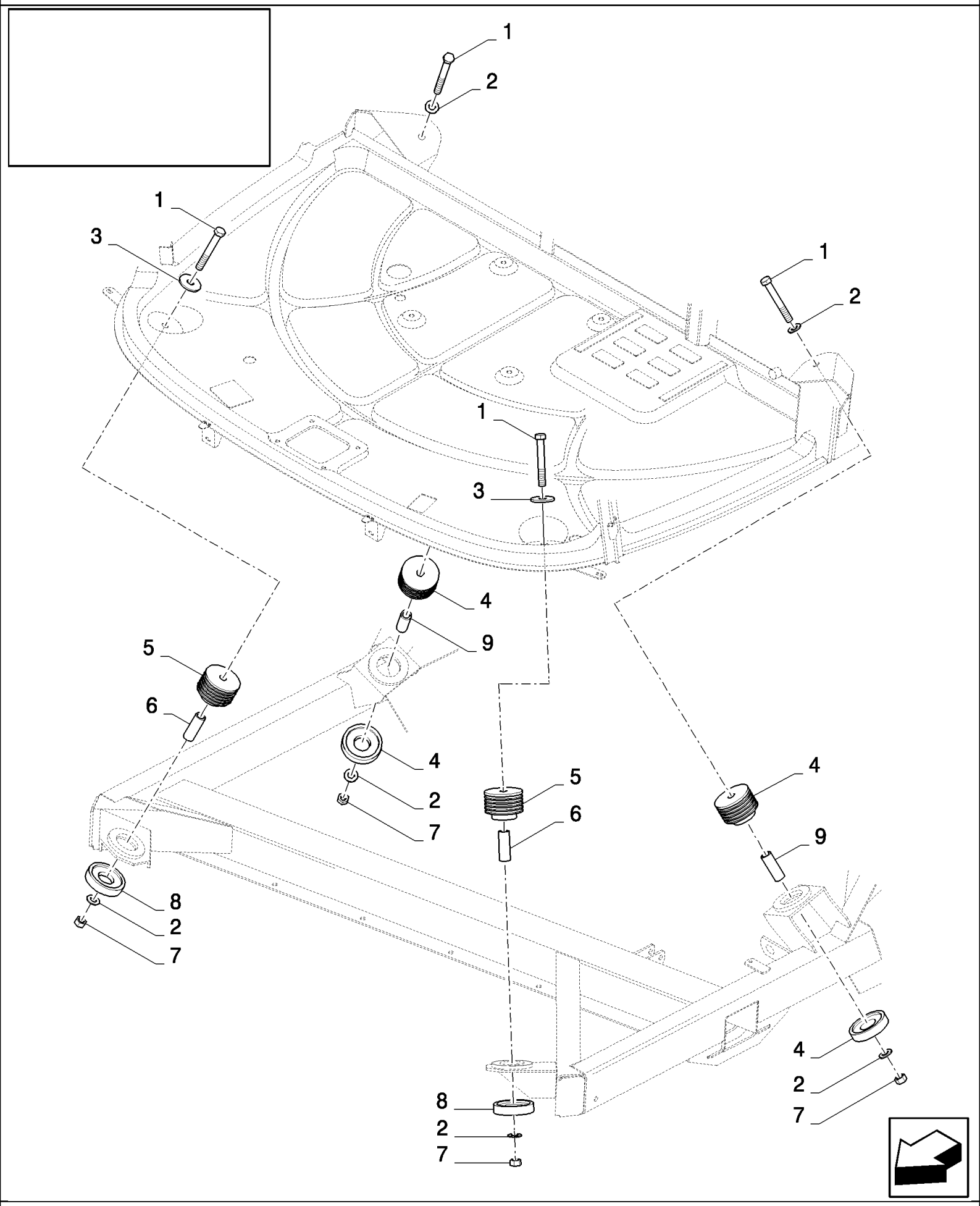

CX880 COMBINE - BASE UNIT (2/01-)

10.08(01) MOUNTING GROUP

ссылка	Номер детали	Кол-во	Описание
1	321246	4	BOLT, Hex, M16 x 120, 8.8,
2	378246	6	WASHER, 16MM
3	337522	2	WASHER, M16 x 56 x 5,
4	86525450	2	DAMPER,
5	86525447	2	DAMPER, (8), BSN C482
5	87012026	2	DAMPER, , ASN D483
6	84442691	2	BUSHING, , BSN C495
6	84807136	2	SPACER, , ASN D496
7	86000441	4	NUT, M16 x 2, Cl 8,
8	NS	2	NOT SERVICED, , BSN C482
8	87022202	2	WASHER, , ASN D483
9	84442691	2	BUSHING, , BSN C482
9	87357392	2	PIN, , ASN D483

10.09(01) SCREEN WASHER FOR FRONT WINDOW

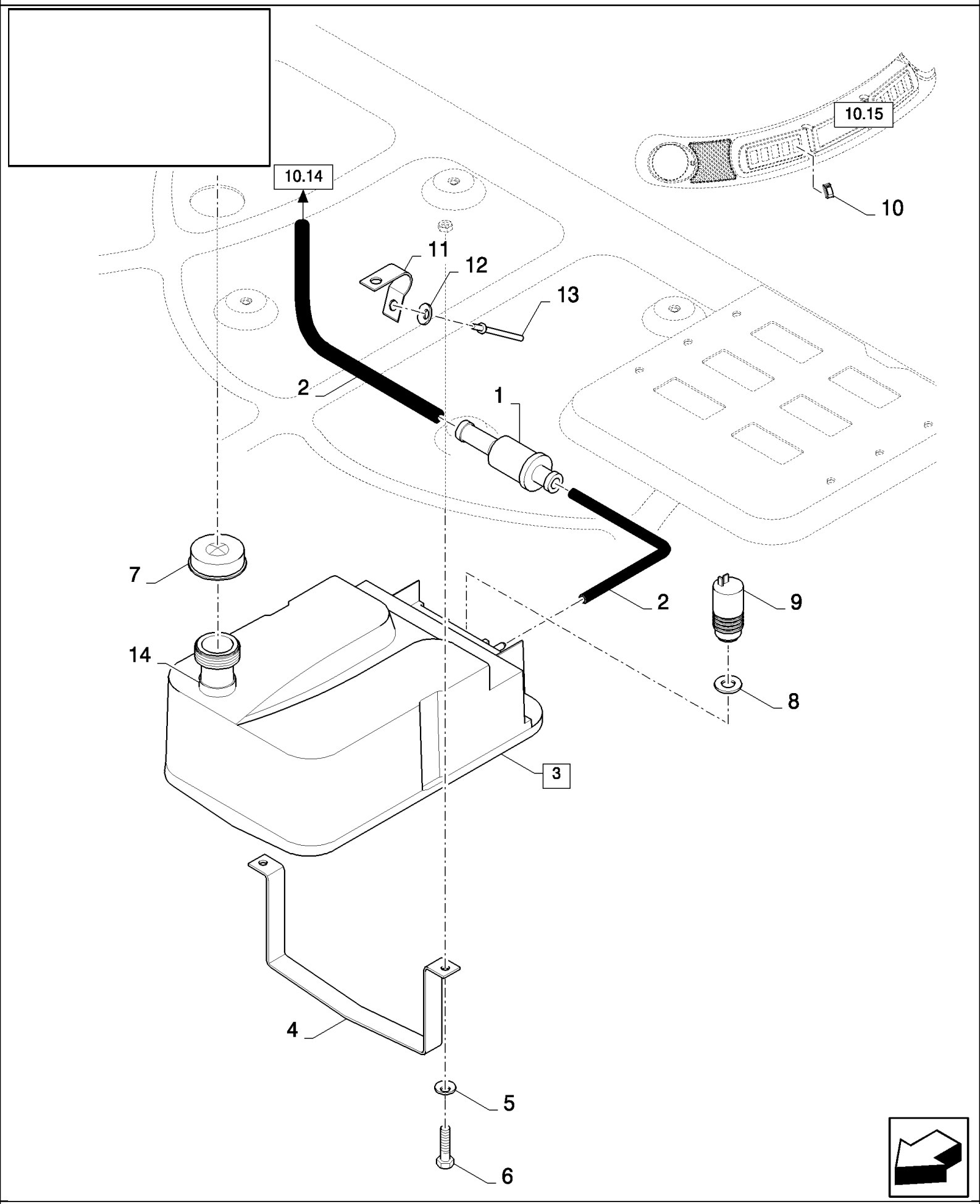

CX880 COMBINE - BASE UNIT (2/01-)

10.09(01) SCREEN WASHER FOR FRONT WINDOW

ссылка	Номер детали	Кол-во	Описание
1	84037530	1	VALVE, CHECK,
2	NS	1	NOT SERVICED, Hose
3	84067920	1	RESERVOIR, WINDSH. WASH, (7 to 9)
4	84073012	1	SUPPORT,
5	322358	2	WASHER, SPRING, Belleville, M8,
7	84073021	1	CAP,
8	84037531	1	SEAL,
9	84037533	1	PUMP,
10	84320245	1	SWITCH, WINDSHIELD WASHER,
11	237910	1	CLAMP, WIRE,
12	89824840	1	WASHER,
13	425520	1	RIVET,
14	84061286	1	SEAL,
6	16043224	2	BOLT, Hex, M8 x 16, 8.8, Full Thd,

10.10(01) STEERING COLUMN

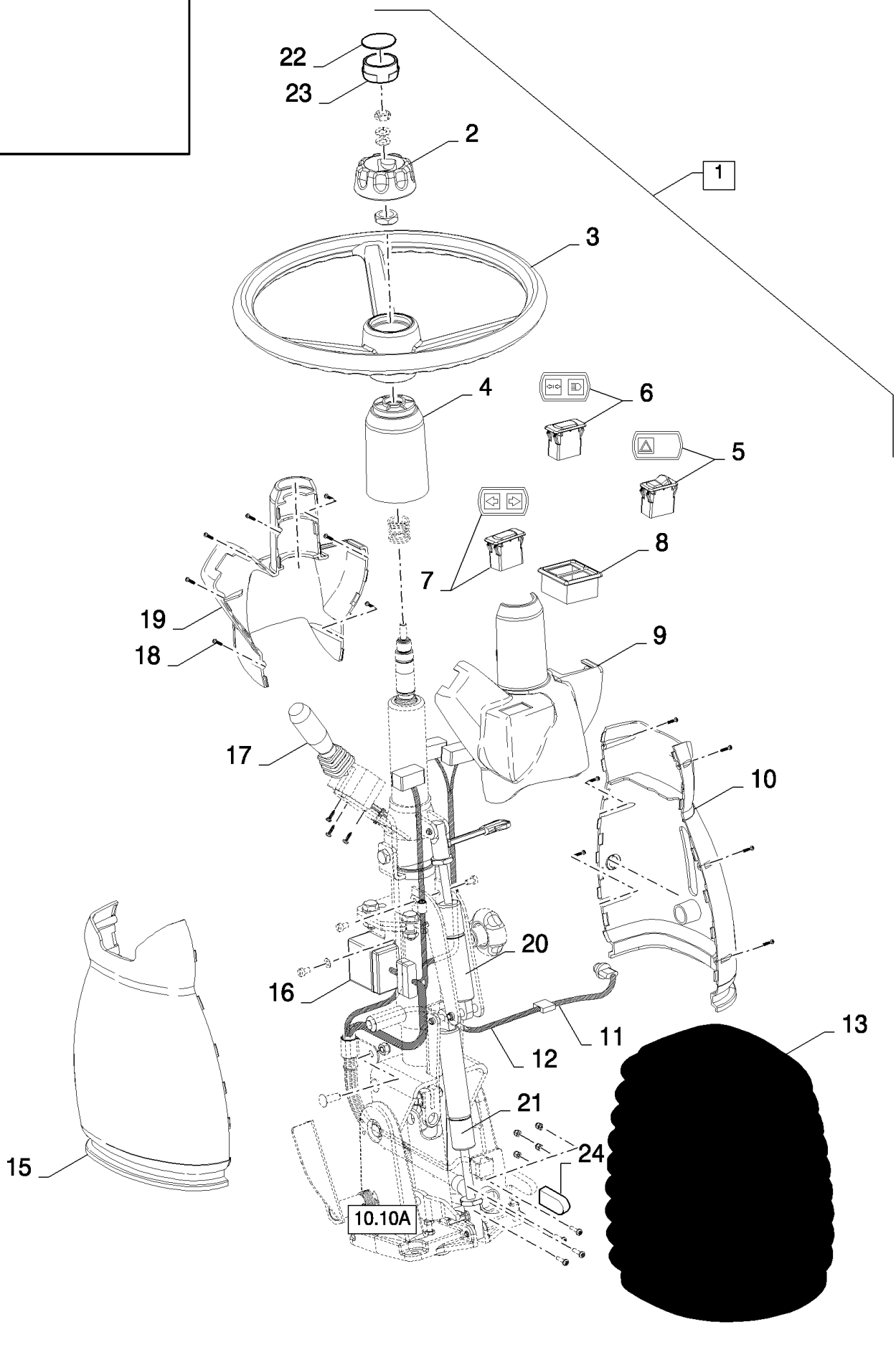

CX880 COMBINE - BASE UNIT (2/01-)

10.10(01) STEERING COLUMN

ссылка	Номер детали	Кол-во	Описание
1	84067656	1	STEERING COLUMN, (2 to 13, 15 to 19, Incl. Fig. 10.10A), STANDARD, BSN C281
1	84443606	1	STEERING COLUMN, (2 to 13, 15 to 19, Incl. Fig. 10.10A), STANDARD, BSN F282407
1	84800573	1	STEERING COLUMN, (2 to 13, 15 to 19, Incl. Fig. 10.10A), STANDARD, ASN D408
1	84067655	1	STEERING COLUMN, (2 to 13, 15 to 19, Incl. Fig. 10.10A), DELUXE, BSN C281
2	84320688	1	KNOB,
3	84320687	1	STEERING WHEEL,
4	84320690	1	COVER, , BSN C281
4	84444068	1	COVER, , ASN D282
5	84320243	1	SWITCH, , BSN C407
5	84800576	1	SWITCH, FLASHER, , ASN D408
6	84320257	1	LIGHT, INDICATER, , BSN C407
6	84800577	1	LIGHT, INDICATER, , ASN D408
7	84320256	1	LIGHT, INDICATER, , BSN C407
7	84800578	1	LIGHT, INDICATER, , ASN D408
8	84320261	2	BEZEL, , BSN C407
8	84800579	1	BEZEL, , ASN D408
9	84320692	1	COVER, , BSN C281
9	84442892	1	COVER, , ASN D282
10	84320694	1	COVER, , STANDARD, BSN C281
10	84442896	1	COVER, , STANDARD, ASN D282
10	84320695	1	COVER, , DELUXE, BSN C281
11	86531127	1	SENSOR, , DELUXE, BSN C281
12	86610688	1	HARNESS, WIRE, , BSN C281
12	86900859	1	HARNESS, WIRE, , BSN F282407
12	84800580	1	HARNESS, WIRE, , ASN D408
13	86536314	1	BOOT, , BSN C407
13	84800574	1	BOOT, , ASN D408
14	84806242	1	KNOB, , ASN D282
15	84320693	1	COVER, , BSN C281
15	84442894	1	COVER, , ASN D282
16	86578898	1	FLASHER UNIT,
17	86622301	1	SWITCH,
18	84067935	13	SCREW,
19	84320691	1	COVER, , BSN C281
19	84442891	1	COVER, , ASN D282
20	84818672	1	GAS STRUT,
21	84818673	1	GAS STRUT,
22	86504532	1	EMBLEM, , ASN D282
23	84806242	1	KNOB, , ASN D282
24	84807930	1	, ASN D408

10.10A(01) STEERING COLUMN

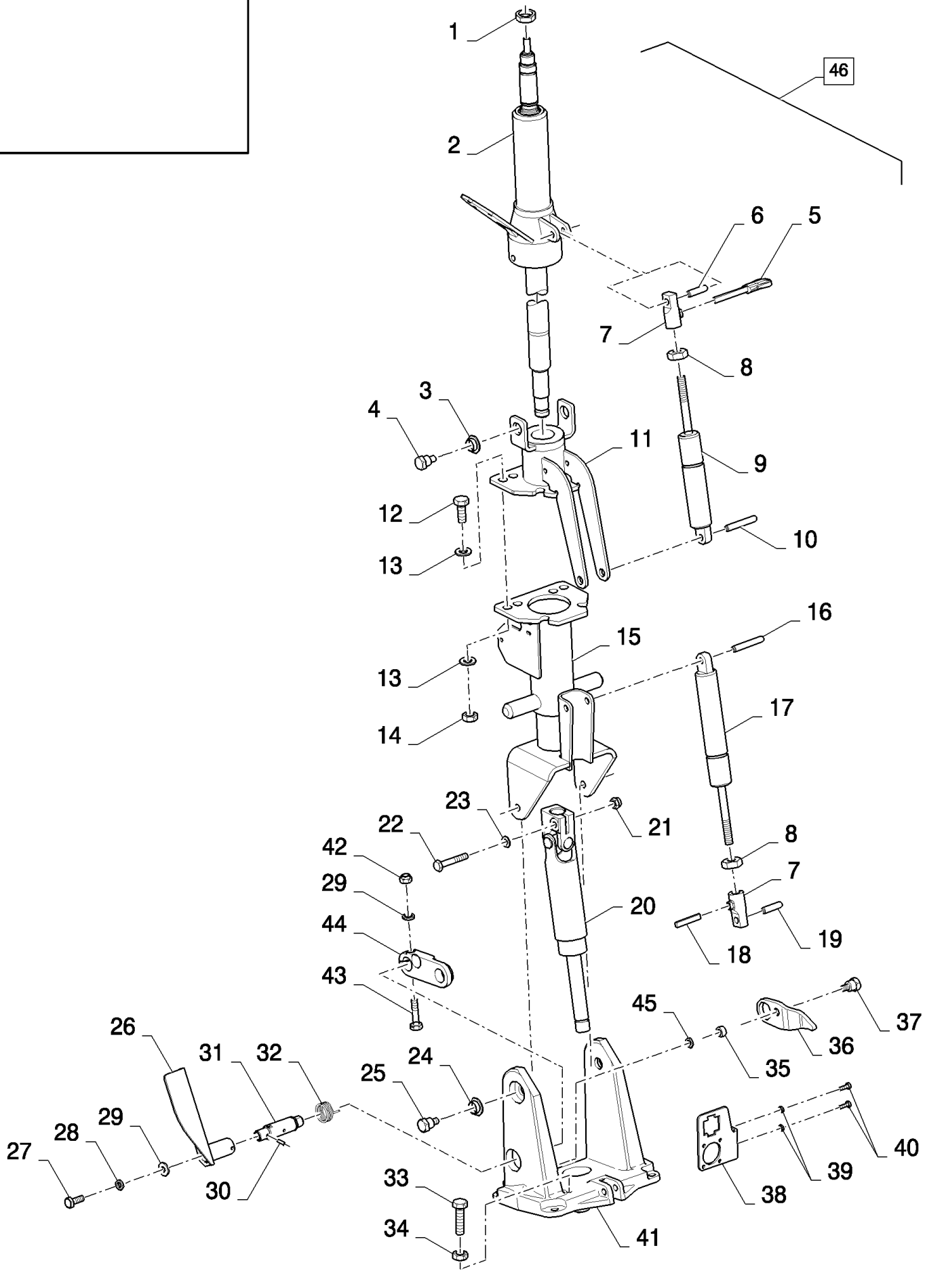

CX880 COMBINE - BASE UNIT (2/01-)

10.10A(01) STEERING COLUMN

ссылка	Номер детали	Кол-во	Описание
1	87281805	1	NUT, M18
2	87281806	1	SHAFT,
3	87281807	2	SLEEVE,
4	87281808	2	BOLT,
5	87281809	1	LEVER,
6	87281810	1	PIN,
7	87281811	2	HEAD,
8	87281812	2	NUT,
9	87281813	1	SPRING,
10	87281814	1	PIN,
11	87281815	1	SUPPORT,
12	87281816	4	SCREW, M10x25
13	87281817	8	WASHER,
14	87281827	4	NUT, M10
15	87281828	1	HANDLE,
16	87281829	1	PIN,
17	87281830	1	SPRING,
18	87281831	1	SHAFT,
19	87281832	1	PIN,
20	87281833	1	JOINT, UNIVERSAL,
21	87281834	1	NUT, M8
22	87281836	1	SCREW, M8x40
23	87281837	1	WASHER,
24	87281838	2	SLEEVE,
25	87281839	2	BOLT,
26	87281840	1	PEDAL,
27	87281841	1	SCREW,
28	87281842	1	WASHER,
29	87281844	2	WASHER,
30	87281843	1	PIN,
31	87281845	1	BOLT,
32	87281846	1	SPRING,
33	87281847	1	SCREW, M6x22
34	87281848	1	NUT, M6
35	87281849	1	BUSHING,
36	87281850	1	LEVER,
37	87281851	1	BOLT,
38	87281852	1	SUPPORT,
39	87281853	2	WASHER,
40	87281854	2	SCREW,
41	87281855	1	BASE,
42	87281856	1	NUT, M6
43	87281857	1	SCREW, M6x30
44	87281858	1	LEVER,

ссылка	Номер детали	Кол-во	Описание
45	87281859	1	WASHER,
46	86536306	1	STEERING COLUMN, (1 to 45), STANDARD, BSN C407
46	84442024	1	STEERING COLUMN, , STANDARD, ASN D408
46	86536307	1	STEERING COLUMN, , DELUXE, NO COMPONENT YET, BSN C281

10.11(01) OPERATORS SEAT, SUPPORT

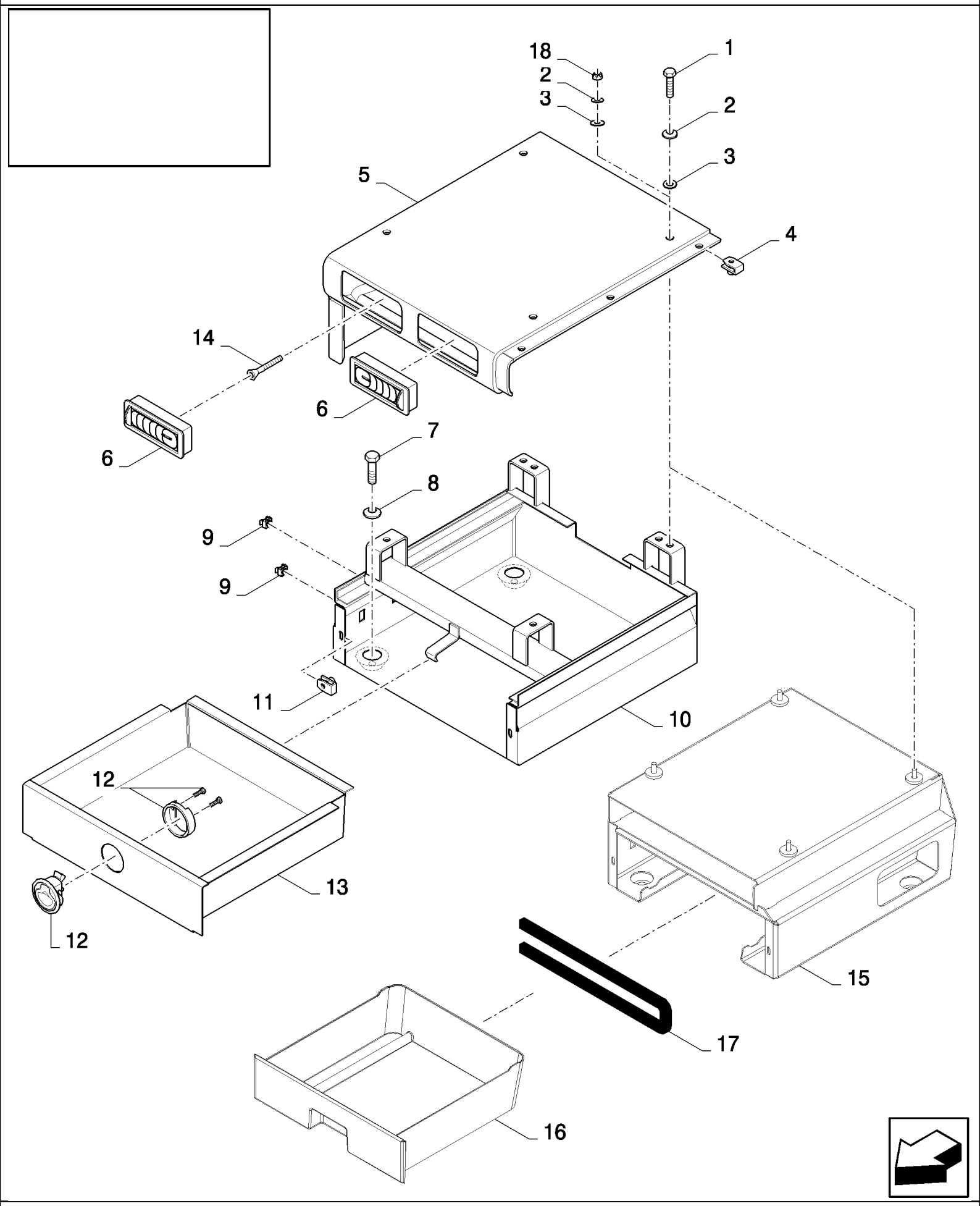

CX880 COMBINE - BASE UNIT (2/01-)

10.11(01) OPERATORS SEAT, SUPPORT

ссылка	Номер детали	Кол-во	Описание
1	43128	4	BOLT, Hex, M8 x 30, 8.8,
2	322358	4	WASHER, SPRING, Belleville, M8,
3	378243	4	WASHER, M8,
4	86014250	3	NUT, M6
5	84320203	1	COVER, , BSN C281
5	84442070	1	COVER, , BSN F282479
5	87283699	1	COVER, , ASN D480
6	84059873	2	DIFFUSER,
7	43138	4	SCREW, Hex, M10 x 20, 8.8, Full Thd,
8	140017	4	WASHER, M10 x 20 x 2,
9	84432090	2	NUT, M6
10	84076824	1	SUPPORT, , BSN C479
11	9628100	2	NUT,
12	84061285	1	LOCK, , BSN C479
13	84076843	1	BOX, , BSN C479
14	9844205	1	SCREW,
15	87281315	1	SUPPORT, , ASN D480
16	87281323	1	HOLDER, , ASN D480
17	87283661	1	SEAL, , ASN D480
18	86629542	1	NUT, LOCK, M8 x 1.25, Cl 8, , ASN D480

10.12(01) OPERATORS SEAT

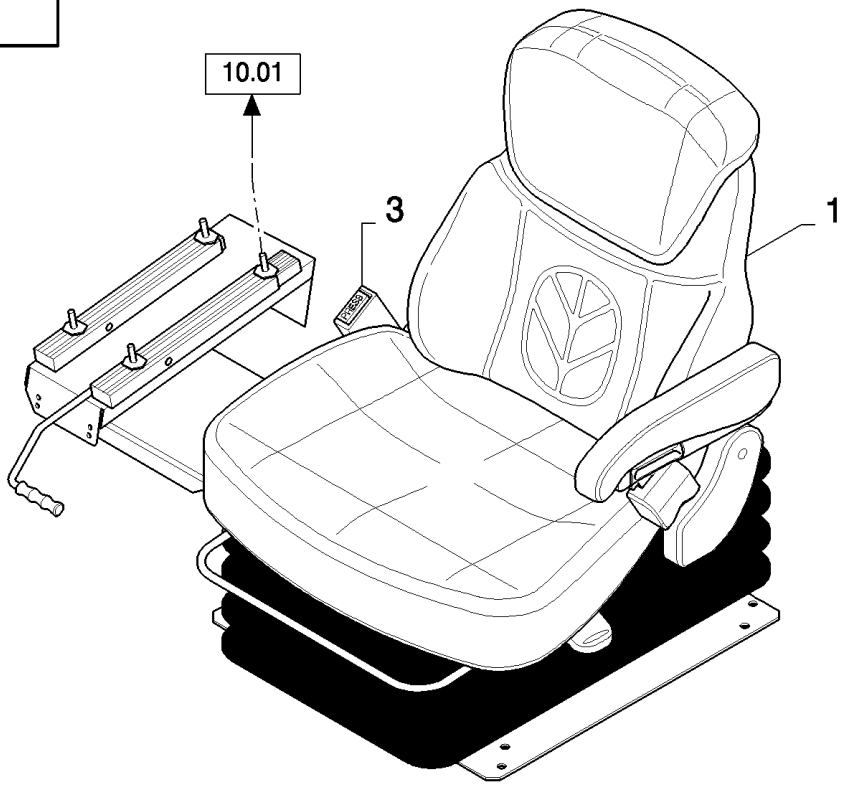

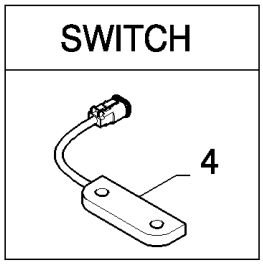

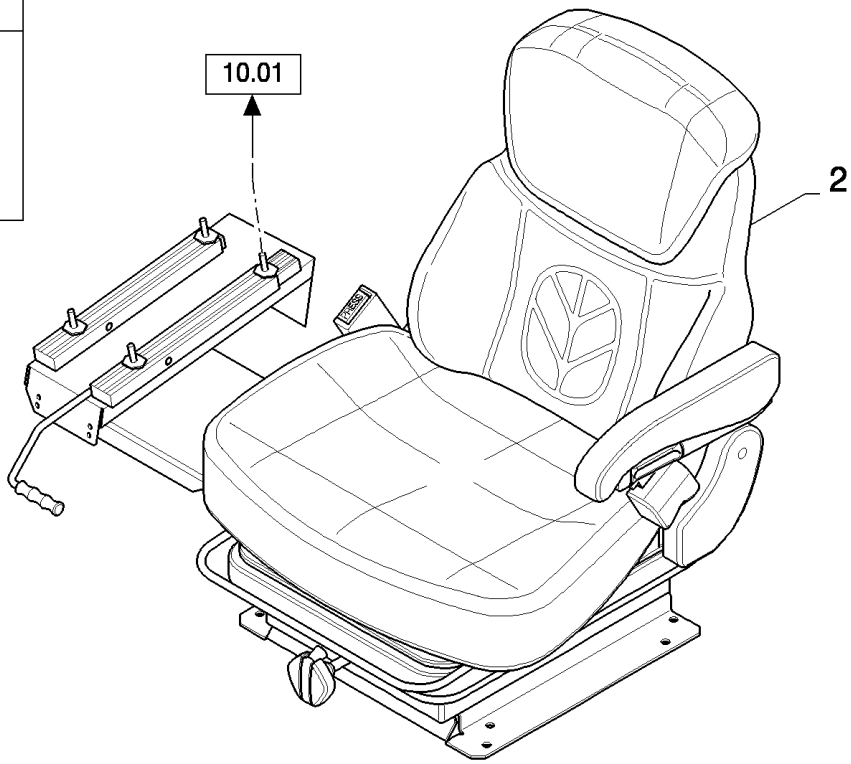

CX880 COMBINE - BASE UNIT (2/01-)

10.12(01) OPERATORS SEAT

ссылка	Номер детали	Кол-во	Описание
1	84067647	1	SEAT, DRIVER, , AIR SUSPENDED
2	84067648	1	SEAT, DRIVER, , STANDARD
3	84081887	1	SEAT BELT,
4	87109334	1	SWITCH,

10.13(01) BUDDY SEAT

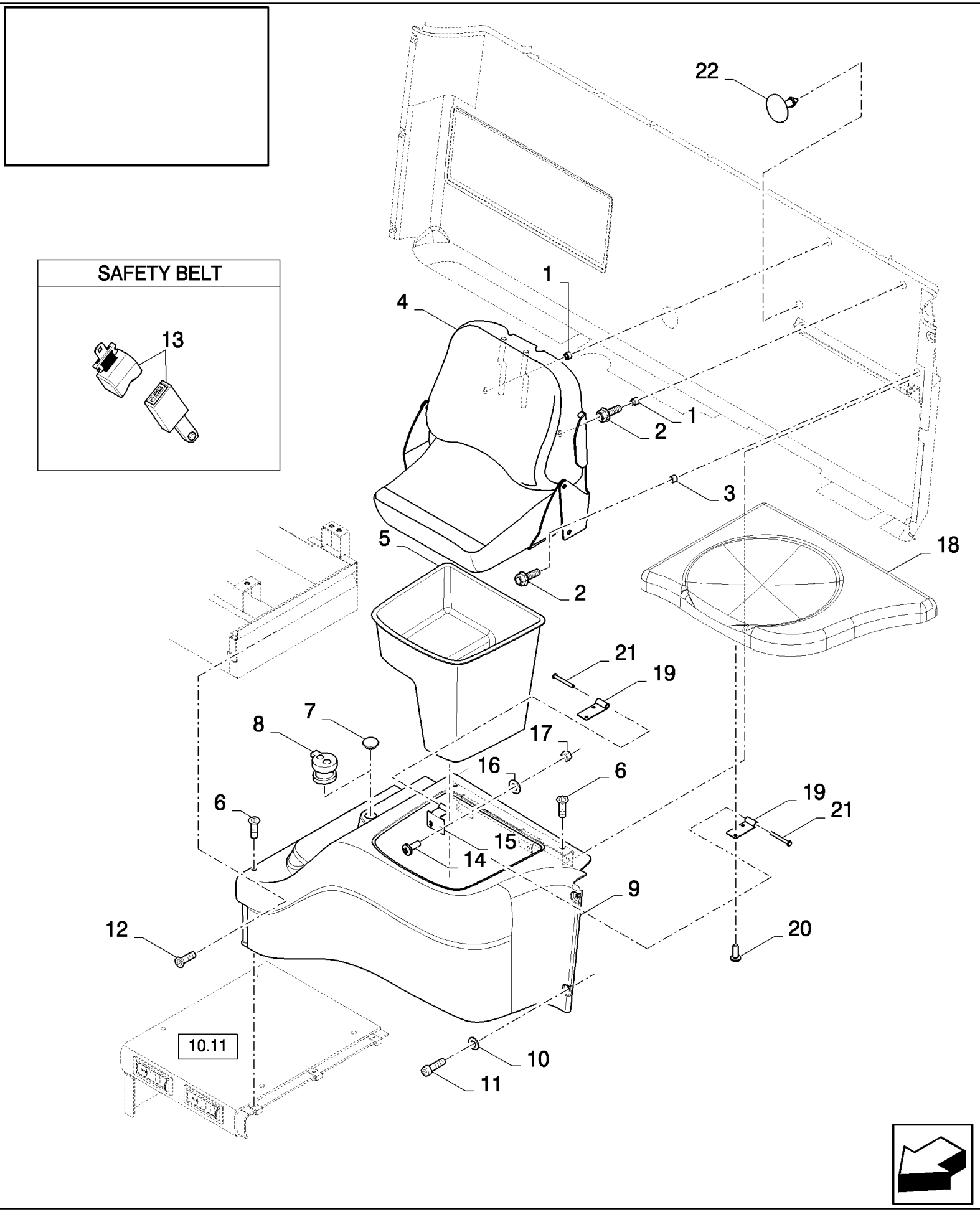

CX880 COMBINE - BASE UNIT (2/01-)

10.13(01) BUDDY SEAT

ссылка	Номер детали	Кол-во	Описание
1	84075475	2	BUSHING,
2	86511480	4	BOLT, Hex Serr Flg, M8 x 30, M8x30
3	84075476	2	BUSHING,
4	84067926	1	SEAT, PASSENGER, , STANDARD
4	84056923	1	SEAT, PASSENGER, , DELUXE
5	84067905	1	BOX,
6	86502680	5	SCREW, Cross Oval Hd, M6 x 20,
7	84067984	1	PLUG,
8	84320279	1	LIGHTER, CIGARETTE,
9	84320204	1	COVER, , BSN C281
9	84442068	1	COVER, , ASN D282
10	84072877	2	WASHER,
11	84007540	2	SCREW,
12	9844205	1	SCREW, M4x14
13	84081010	1	SEAT BELT,
14	86511829	4	SCREW, Cross Pan Hd, M6 x 16, , ASN D348
15	84447531	2	HINGE, , ASN D348
16	322357	4	WASHER, SPRING, Belleville, M6, , ASN D348
17	15896221	4	NUT, M6, Cl 10, , ASN D348
18	84442922	2	CUSHION, SEAT, , ASN D348
19	84447530	2	HINGE, , ASN D348
20	84043237	4	SCREW, , ASN D348
21	84447532	2	PIN, , ASN D348
22	84442923	4	PLUG, , ASN D348

10.14(01) CAB ROOF, OUTER

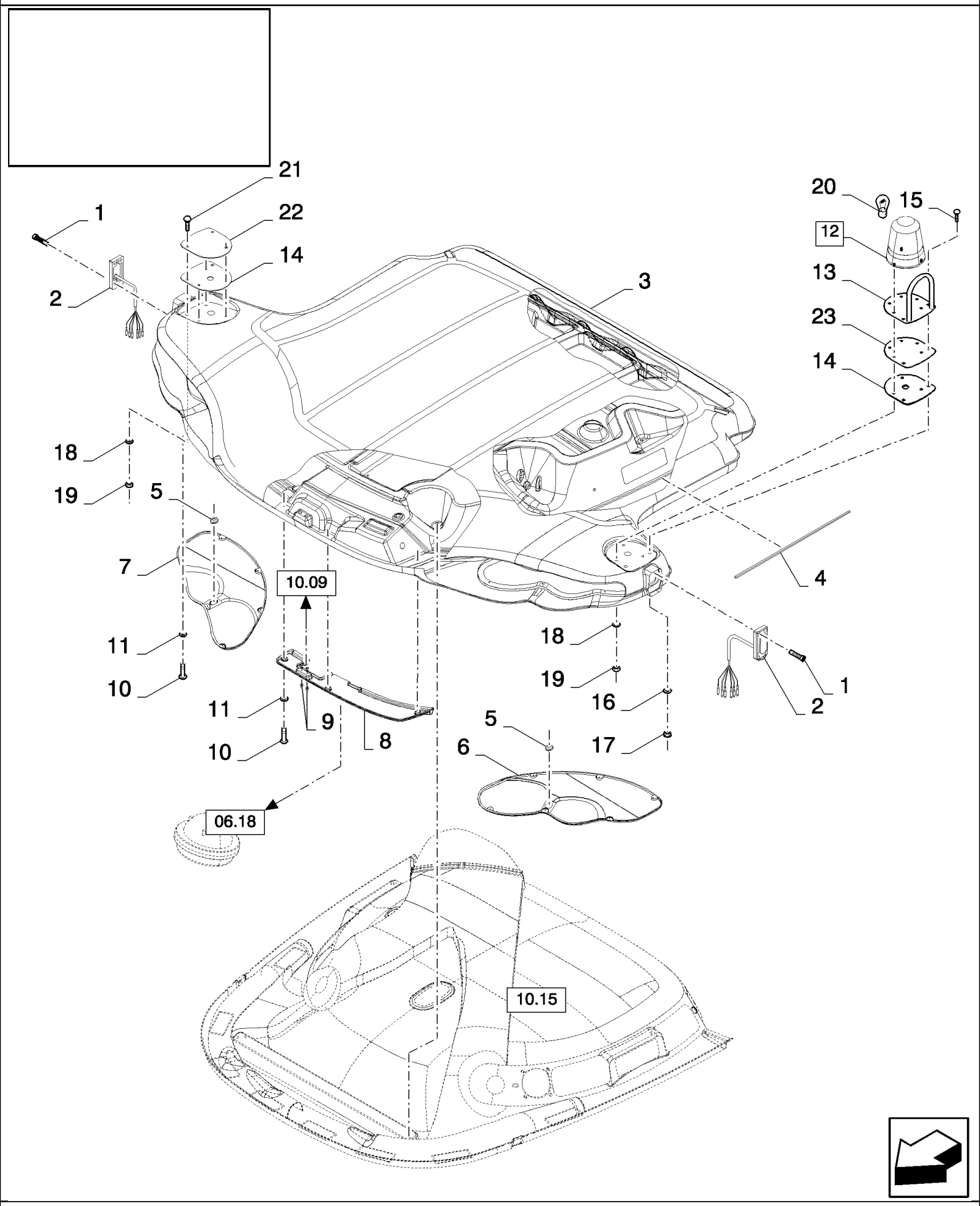

CX880 COMBINE - BASE UNIT (2/01-)

10.14(01) CAB ROOF, OUTER

ссылка	Номер детали	Кол-во	Описание
1	84000811	8	SCREW, M8x35
2	84059856	2	CONNECTOR, WIRE,
3	84334044	1	ROOF, , BSN C281
3	84443574	1	ROOF, , ASN D282
4	86534853	1	STRIP-GASKET,
5	84435431	2	GROMMET,
6	84320341	1	COVER, LH
7	84320342	1	COVER, RH
8	84320343	1	COVER, , BSN C281
8	84444231	1	COVER, , WITH CENTER LIGHT, ASN D282
8	84444232	1	COVER, , WITHOUT CENTER LIGHT
9	84037532	2	NOZZLE CAP,
10	86511042	15	SCREW, Cross Pan Hd, M4 x 16,
11	335872	15	WASHER,
12	84067911	2	BEACON, (20), BSN C435
12	87050694	2	BEACON, (20), ASN D436
13	84077158	2	SUPPORT,
14	84432039	2	SEAL PROTECTION,
15	308761	4	BOLT, CARRIAGE, Short NK, M8 x 25, Cl8.8, Full Thd,
16	378243	4	WASHER, M8,
17	412250	4	NUT, LOCK, M8 x 1.25, Cl 8,
18	322357	6	WASHER, SPRING, Belleville, M6,
19	15896221	6	NUT, M6, Cl 10,
20	86616248	2	BULB, #HI, 55w, 12V-55W
21	86512441	6	BOLT, CARRIAGE, Short NK, M6 x 30, Cl8.8, Full Thd, M6x30
22	84432057	2	COVER,
23	87359527	2	PLATE, , ASN D488

10.15(01) CAB ROOF, INNER

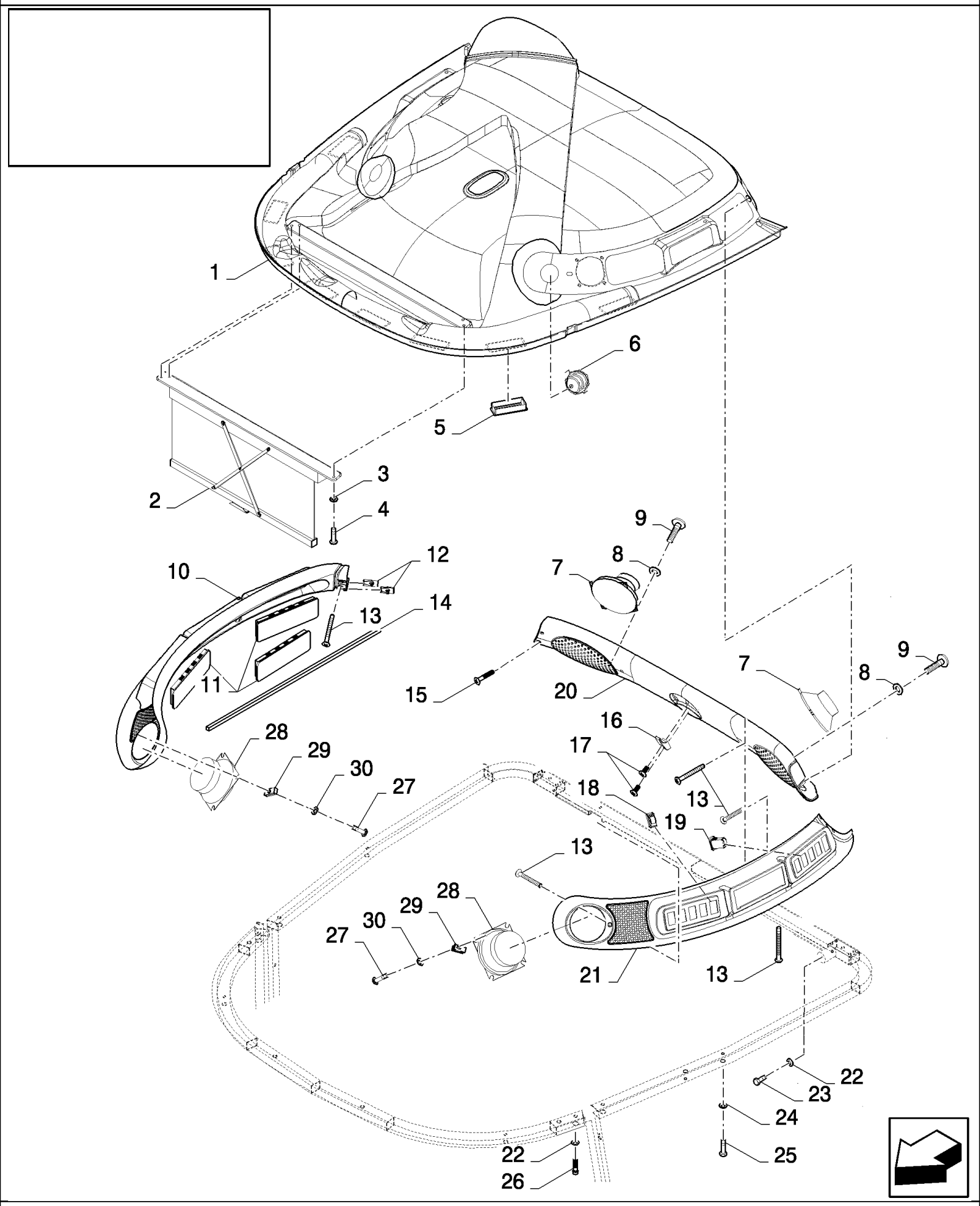

CX880 COMBINE - BASE UNIT (2/01-)

10.15(01) CAB ROOF, INNER

ссылка	Номер детали	Кол-во	Описание
1	86520794	1	SOFT TRIM, , BSN C499
1	86979509	1	SOFT TRIM, , ASN D500
2	5176441	1	SUNSHADE,
3	335872	4	WASHER,
4	86050251	4	SCREW, Cross Pan Hd, M4 x 25,
5	84059873	8	DIFFUSER,
6	84059804	2	GRILLE,
7	86572628	2	SPEAKER, LOW
7	86520822	2	SPEAKER, MID AND HIGH
8	140014	8	WASHER, M5 x 10 x 1,
9	86511827	8	SCREW, Cross Pan Hd, M5 x 20,
10	86520798	1	COVER, RH
11	84439017	3	COVER,
12	86014250	4	NUT,
13	84439080	9	SCREW, M6x60
14	84435430	1	STRIP-GASKET,
15	86502680	4	SCREW, Cross Oval Hd, M6 x 20,
16	86520824	1	CLOTHING, HANGER,
17	84058989	2	SCREW, M4x10
18	84320247	1	SWITCH, WINDSHIELD WIPER, , BSN C237
18	86633771	1	SWITCH, WINDSHIELD WIPER, , ASN D238
19	84320263	AR	PLUG,
20	86520804	1	COVER,
21	86520801	1	COVER, LH
22	322358	5	WASHER, SPRING, Belleville, M8,
23	120104	1	SCREW, Hex, M8 x 20, 8.8,
24	322357	6	WASHER, SPRING, Belleville, M6,
25	86534686	6	SCREW, M6x30
26	84000811	4	SCREW, M8x35
27	86511824	8	SCREW, Cross Pan Hd, M4 x 20,
28	86572627	2	SPEAKER, MID AND HIGH
29	9628100	8	NUT,
30	335872	8	WASHER, 4MM

10.16(01) REAR VIEW MIRROR

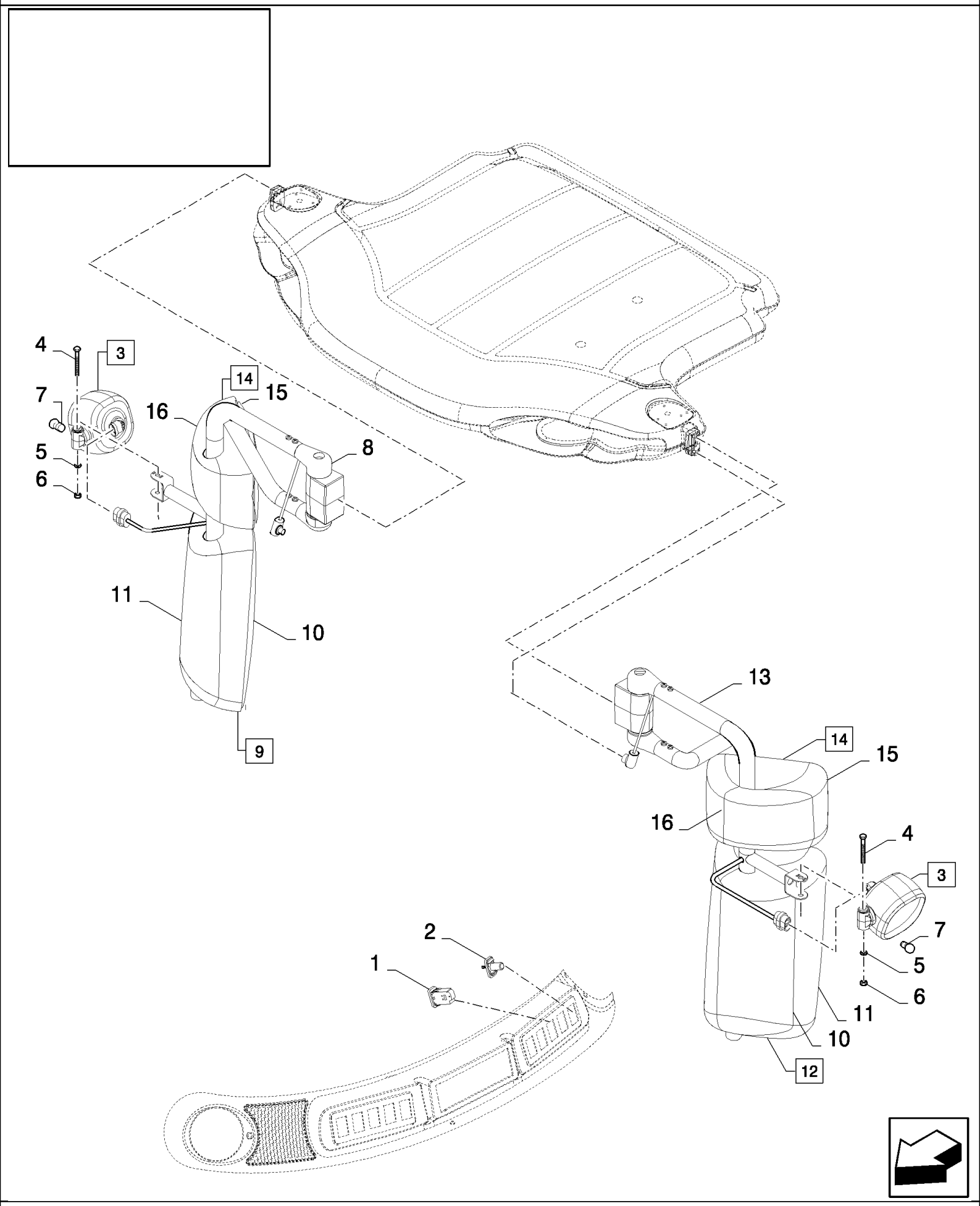

CX880 COMBINE - BASE UNIT (2/01-)

10.16(01) REAR VIEW MIRROR

ссылка	Номер детали	Кол-во	Описание
1	84320244	1	SWITCH, MIRROR HEATING
2	86565146	1	SWITCH, MIRROR ADJUSTMENT
3	84320374	2	LAMP, (4 to 7)
4	43130	1	BOLT, Hex, M8 x 50, 8.8,
5	412712	1	WASHER, 8MM
6	9991588	1	NUT, LOCK, M8 x 1.25, Cl 8,
7	9847312	1	BULB, 12V, 50W HALOGEN
8	84067960	1	ARM, RH
8	84073713	1	ARM, RH, FOR NA ONLY, STANDARD
9	84059852	1	MIRROR, RH, (10,11)
9	84434476	1	MIRROR, RH, (10,11), FOR NA ONLY, DELUXE
9	84059855	1	MIRROR, RH, (10,11), FOR NA ONLY, STANDARD
10	84434478	1	GLASS,
10	84434470	1	GLASS, , FOR NA ONLY, DELUXE
10	84434471	1	GLASS, , FOR NA ONLY, STANDARD
11	84434473	1	COVER,
12	84059851	1	MIRROR, LH, (10,11)
12	84434469	1	MIRROR, LH, (10,11), FOR NA ONLY, DELUXE
12	84059854	1	MIRROR, LH, (10,11), FOR NA ONLY, STANDARD
13	84067959	1	ARM, LH
13	84073711	1	ARM, LH, STANDARD, FOR NA ONLY
14	84059853	1	MIRROR, REAR-VIEW, (15, 16)
14	84434477	1	MIRROR, REAR-VIEW, (15, 16), FOR NA ONLY, DELUXE
15	84434479	1	GLASS,
15	84434472	1	GLASS, , DELUXE, FOR NA ONLY
16	84434474	1	COVER,

10.17(01) MIRROR FOR GERMANY

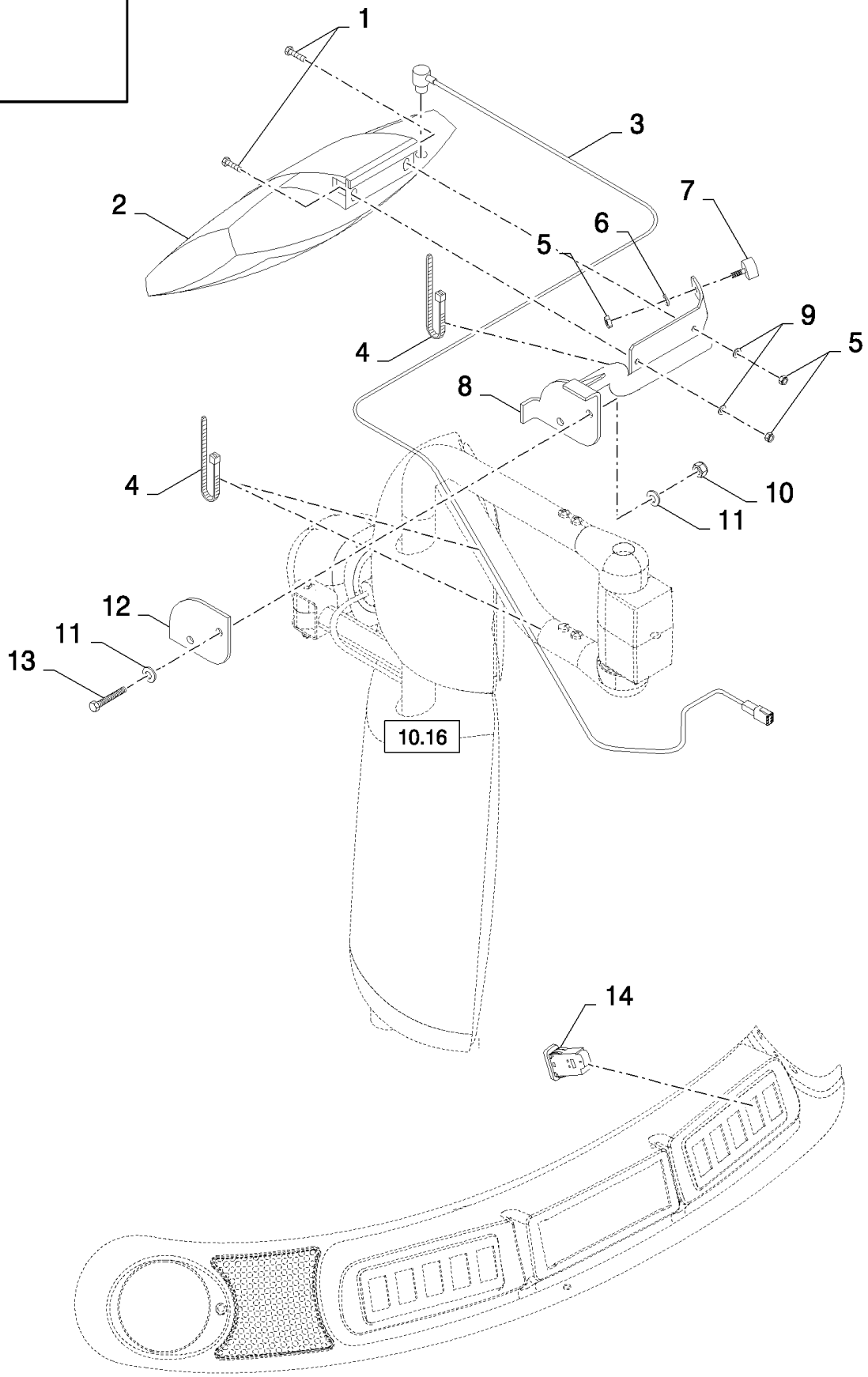

CX880 COMBINE - BASE UNIT (2/01-)

10.17(01) MIRROR FOR GERMANY

ссылка	Номер детали	Кол-во	Описание
1	86508568	2	SCREW, Hex, M6 x 16, 8.8,
2	84433606	1	MIRROR, REAR-VIEW,
3	84435465	1	HARNESS, WIRE, , BSN C281
3	84444198	1	HARNESS, WIRE, , ASN D282
4	86566989	3	STRAP, CABLE,
5	353308	5	NUT, M6 x 1, Cl 8,
6	140015	1	WASHER, 6MM
7	916454	1	DAMPER,
8	84435413	1	SUPPORT,
9	140040	2	WASHER, M6 x 22 x 2,
10	100037	2	NUT, M10 x 1.5, Cl 8,
11	140017	4	WASHER, M10 x 20 x 2,
12	84435412	1	SUPPORT,
13	120069	2	SCREW, Hex, M10 x 50, 8.8,
14	84320260	1	SWITCH,

10.18(01) REAR PANEL

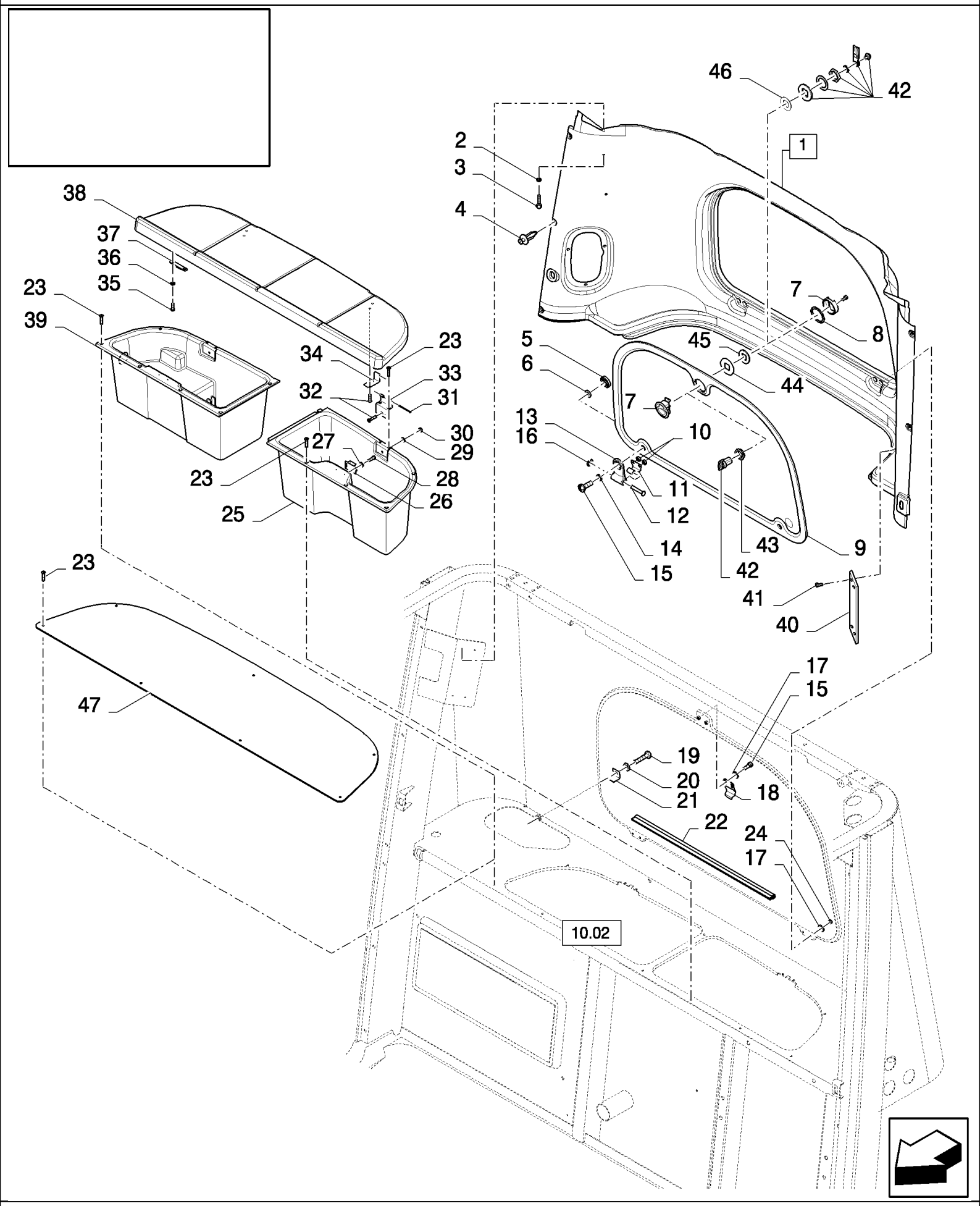

CX880 COMBINE - BASE UNIT (2/01-)

10.18(01) REAR PANEL

ссылка	Номер детали	Кол-во	Описание
1	86520821	1	SOFT TRIM, , BSN C273
1	84442006	1	SOFT TRIM, (40,41), BSN F274499
1	87381934	1	SOFT TRIM, , ASN D500
2	84607406	2	WASHER,
3	84607407	2	SCREW,
4	84320280	9	PLUG,
5	86531235	2	BUSHING,
6	86531234	2	WASHER, RUBBER,
7	84061285	1	LOCK, , BSN C315
8	84061286	1	SEAL, , BSN C315
9	84061283	1	GLASS, CAB, , BSN C315
9	84440767	1	GLASS, , ASN D316
10	84061305	4	SPACER,
11	84435282	2	HINGE,
12	84320278	2	PIN,
13	84061288	2	HINGE,
14	84072877	2	WASHER,
15	84073086	8	SCREW, M6x20
16	83971493	2	CIRCLIP,
17	84007539	6	WASHER,
18	84434985	1	CLIP, , BSN C315
18	84444590	1	CLIP, , ASN D316
19	43128	1	BOLT, Hex, M8 x 30, 8.8,
20	140016	1	WASHER, M8 x 16 x 1.6,
21	84072548	1	BRACKET,
22	84061284	1	ELEMENT, SEALING, , BSN C237
22	84440563	1	ELEMENT, SEALING, , BSN F238273
22	84440558	1	SEAL, , BSN F274499
22	87381500	1	SEAL, RUBBER, , ASN D500
23	412477	14	SCREW, Cross Oval Hd, M4 x 25, M4x25
24	15896221	4	NUT, M6, Cl 10,
25	86527447	1	BOX, , BSN C315
25	87106698	1	BOX, , ASN D316
26	84432741	2	LATCH,
27	86509827	4	WASHER, LOCK, M3,
28	86511816	4	SCREW, Cross Pan Hd, M3 x 16,
29	335872	2	WASHER, 4MM
30	385681	2	NUT, LOCK, M4 x .7, Cl 8, M4
31	84432117	2	PIN,
32	9844205	6	SCREW, M4x14
33	84432120	2	HINGE,
34	84432119	2	HINGE,
35	86511042	4	SCREW, Cross Pan Hd, M4 x 16,
36	89824840	4	WASHER, 4MM

ссылка	Номер детали	Кол-во	Описание
37	84432767	2	LATCH,
38	84067972	1	COVER, , STANDARD
38	86523748	1	COVER, , DELUXE
39	84059837	1	BOX, , FOR AIRCO WITH MANUAL CONTROL
39	86527448	1	BOX, , FOR AIRCO WITH AUTOMATIC CONTROL
40	84059896	1	DOOR, , BSN C499
40	87107709	1	DOOR, , ASN D500
41	84059897	4	CLIP, , BSN C499
41	87012023	1	LATCH, , ASN D500
42	84441355	1	LATCH, , ASN D316
43	84441321	1	BUSHING, , ASN D316
44	84441337	1	PLATE, MOUNTING, , ASN D316
45	84441319	1	SEAL, , ASN D316
46	84441333	1	WASHER, , ASN D316
47	84440065	1	PLATE, , ASN D348

10.19(01) REAR PANEL, LOWER

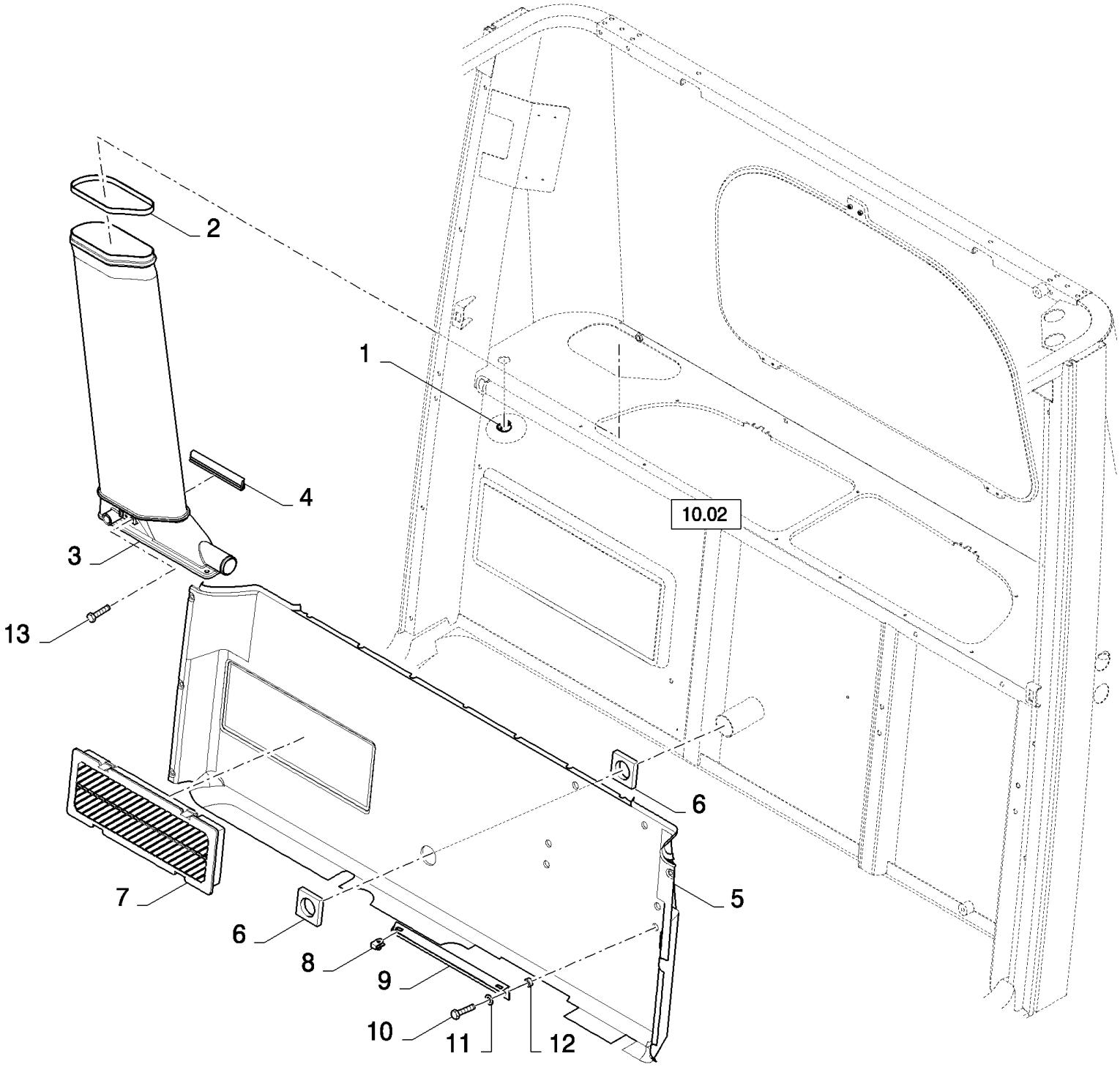

CX880 COMBINE - BASE UNIT (2/01-)

10.19(01) REAR PANEL, LOWER

ссылка	Номер детали	Кол-во	Описание
1	84989335	1	PLUG,
2	84059894	1	SEAL,
3	84433640	1	DUCT, AIR, , FOR AIRCO WITH MANUAL CONTROL, BSN C347
3	84433640	1	DUCT, AIR, , WITHOUT STORAGE BOXES, ASN D348
3	86528786	1	DUCT, AIR, , FOR AIRCO WITH AUTOMATIC CONTROL, BSN C347
3	86528786	1	DUCT, AIR, , WITH STORAGE BOXES, ASN D348
4	84059895	1	ELEMENT, SEALING,
5	86520994	1	SOFT TRIM, , BSN C499
5	86979507	1	PANEL, TRIM, , ASN D500
6	84067933	2	SEAL,
7	84061669	1	GRILLE,
8	86014250	2	NUT,
9	84076869	1	SUPPORT, , BSN C347
9	84447466	1	SUPPORT, , ASN D348
10	43128	2	BOLT, Hex, M8 x 30, 8.8,
11	140016	2	WASHER, M8 x 16 x 1.6,
12	200202	2	RING,
13	84442929	1	PLUG,

10.20(01) AIR CONDITIONER UNIT : MOUNTING GROUP IN CAB

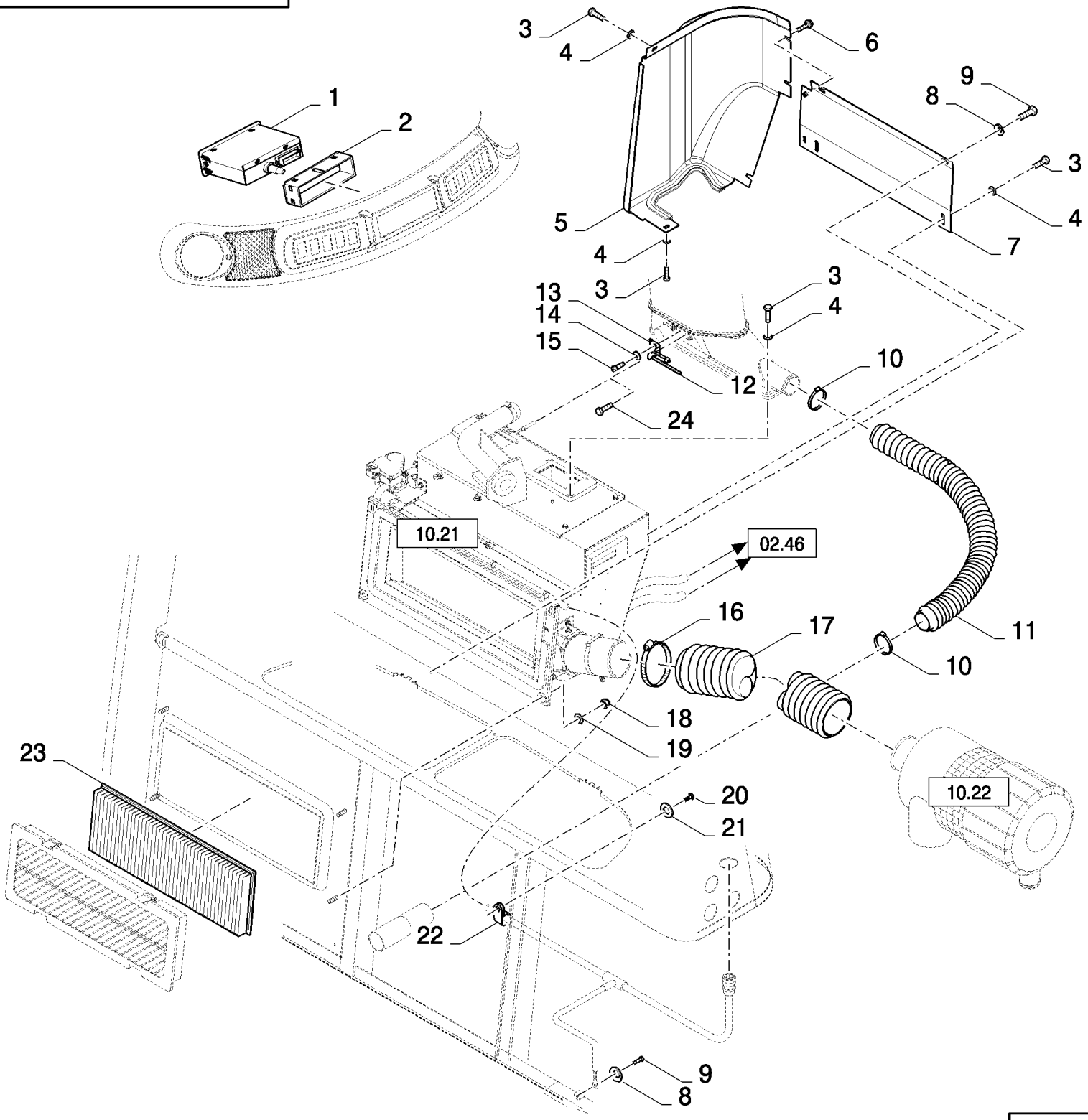

CX880 COMBINE - BASE UNIT (2/01-)

10.20(01) AIR CONDITIONER UNIT : MOUNTING GROUP IN CAB

ссылка	Номер детали	Кол-во	Описание
1	84444056	1	CONTROL UNIT, , AUTOMATIC CONTROL, BSN C387
1	87029735	1	CONTROL, , AUTOMATIC CONTROL, BSN F388479
1	87337658	1	AIR CONDITIONING, , AUTOMATIC CONTROL, ASN D480
1	84059886	1	CONTROL UNIT, , MANUAL CONTROL, BSN C479
1	87337659	1	AIR CONDITIONING, , MANUAL CONTROL, ASN D480
1	84059886	1	CONTROL UNIT, , MANUAL CONTROL WITHOUT HEATING, BSN C281
1	84443849	1	CONTROL UNIT, , MANUAL CONTROL WITHOUT HEATING, BSN F282479
1	87337660	1	AIR CONDITIONING, , MANUAL CONTROL WITHOUT HEATING, ASN D480
2	84334445	1	SLEEVE,
3	120100	6	BOLT, Hex, M6 x 20, 8.8,
4	140040	6	WASHER, M6 x 22 x 2,
5	84067980	1	COVER,
6	9804256	3	BOLT, Hex Flg, M6 x 20, 8.8,
7	84076757	1	SUPPORT,
8	322358	3	WASHER, SPRING, Belleville, M8,
9	120104	3	SCREW, Hex, M8 x 20, 8.8,
10	360747	2	CLAMP,
11	86531050	1	HOSE, FLEXIBLE,
12	86566989	1	STRAP, CABLE, , AUTOMATIC CONTROL
13	84431349	1	BRACKET, , AUTOMATIC CONTROL
14	322357	1	WASHER, SPRING, Belleville, M6, , AUTOMATIC CONTROL
15	86585711	1	SCREW, Cross Pan Hd, M6 x 10, , AUTOMATIC CONTROL
16	381144	1	CLAMP, HOSE, #60, 3.31/4.25 Type F Worm,
17	86531048	1	HOSE, FLEXIBLE,
18	86629542	4	NUT, LOCK, M8 x 1.25, Cl 8,
19	378243	4	WASHER, M8,
20	86511042	1	SCREW, Cross Pan Hd, M4 x 16,
21	89824840	1	WASHER, 4MM
22	9503931	1	CLAMP,
23	84058793	1	FILTER, CAB,
24	84442929	1	PLUG,

10.21(01) AIR CONDITIONER UNIT - C479

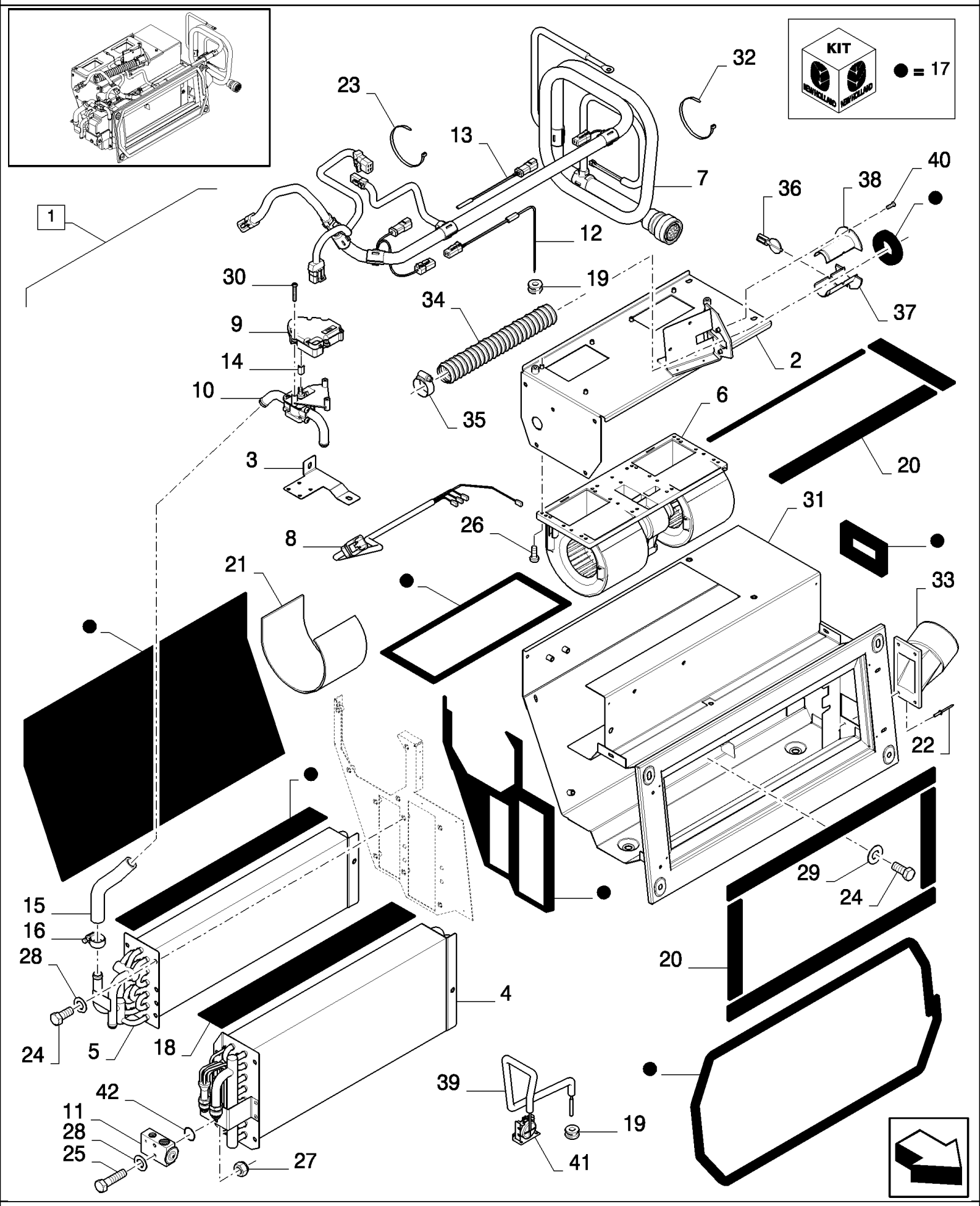

CX880 COMBINE - BASE UNIT (2/01-)

10.21(01) AIR CONDITIONER UNIT - C479

ссылка	Номер детали	Кол-во	Описание
1	86531119	1	AIR CONDITIONING, (2 to 41), MANUAL CONTROL
1	86531120	1	AIR CONDITIONING, (2 to 41), AUTOMATIC CONTROL
1	84443847	1	AIR CONDITIONING, (2 to 41), AUTOMATIC CONTROL, WITH COOLBOX, ASN D282
1	84807752	1	AIR CONDITIONING, (2 to 41), WITHOUT HEATING, MANUAL CONTROL, BSN C281
1	84443848	1	AIR CONDITIONING, (2 to 41), MANUAL CONTROL, WITHOUT HEATING, WITH COOLBOX, ASN D282
2	84320220	1	PLATE, , AUTOMATIC CONTROL, BSN C281
2	84989879	1	PLATE, , AUTOMATIC CONTROL, ASN D282
2	84989879	1	PLATE, , MANUAL CONTROL
3	84074997	1	BRACKET,
4	86523242	1	EVAPORATOR,
5	86523241	1	HEATER,
6	84431351	1	BLOWER,
7	86610690	1	HARNESS, WIRE, , AUTOMATIC CONTROL
7	86610691	1	HARNESS, WIRE, , MANUAL CONTROL
8	86594052	1	HARNESS, WIRE,
9	84074260	2	ACTUATOR, , AUTOMATIC CONTROL
9	84074260	1	ACTUATOR, , MANUAL CONTROL
10	84074259	1	VALVE,
11	84015397	1	VALVE,
12	86531133	1	SENSOR, PROBE, AUTOMATIC CONTROL
13	86531126	3	SENSOR, AIRTEMP, AUTOMATIC CONTROL
14	84074288	1	BUSHING,
15	NSS	AR	NOT SERVICED SEPARATELY, HOSE
16	NSS	2	NOT SERVICED SEPARATELY, CLAMP
17	84817879	1	KIT, SEALS,
18	84320227	1	SEAL,
19	84320222	AR	GROMMET,
20	84015383	AR	SEAL,
21	84434934	1	SEAL,
22	84320221	1	DUCT, AIR,
23	84320229	AR	STRAP, CABLE,
24	NSS	16	NOT SERVICED SEPARATELY, M6x16
25	NSS	1	NOT SERVICED SEPARATELY, M6x40
26	NSS	11	NOT SERVICED SEPARATELY, M4x12
27	NSS	1	NOT SERVICED SEPARATELY, M6
28	NSS	16	NOT SERVICED SEPARATELY, M6
29	NSS	2	NOT SERVICED SEPARATELY, 1/4"
30	NSS	7	NOT SERVICED SEPARATELY, 8-15x7/16"
31	86523252	1	HOUSING,
32	NSS	2	NOT SERVICED SEPARATELY,
33	NSS	4	NOT SERVICED SEPARATELY, 3MM
34	84989884	1	HOSE,
35	84989885	2	CLAMP,

ссылка	Номер детали	Кол-во	Описание
36	84989880	1	FLAP, , AUTOMATIC CONTROL
37	84989881	1	DUCT, AIR,
38	84989882	1	DUCT, AIR,
39	NSS	AR	NOT SERVICED SEPARATELY,
40	NSS	2	NOT SERVICED SEPARATELY, M4x12
41	84078518	1	THERMOSTAT, , MANUAL CONTROL
41	84800780	1	THERMOSTAT, , AUTOMATIC CONTROL, ASN D282
42	89827059	1	O-RING, 14MM
42	84817009	1	O-RING, 11MM

10.21(02) AIR CONDITIONER UNIT - D480

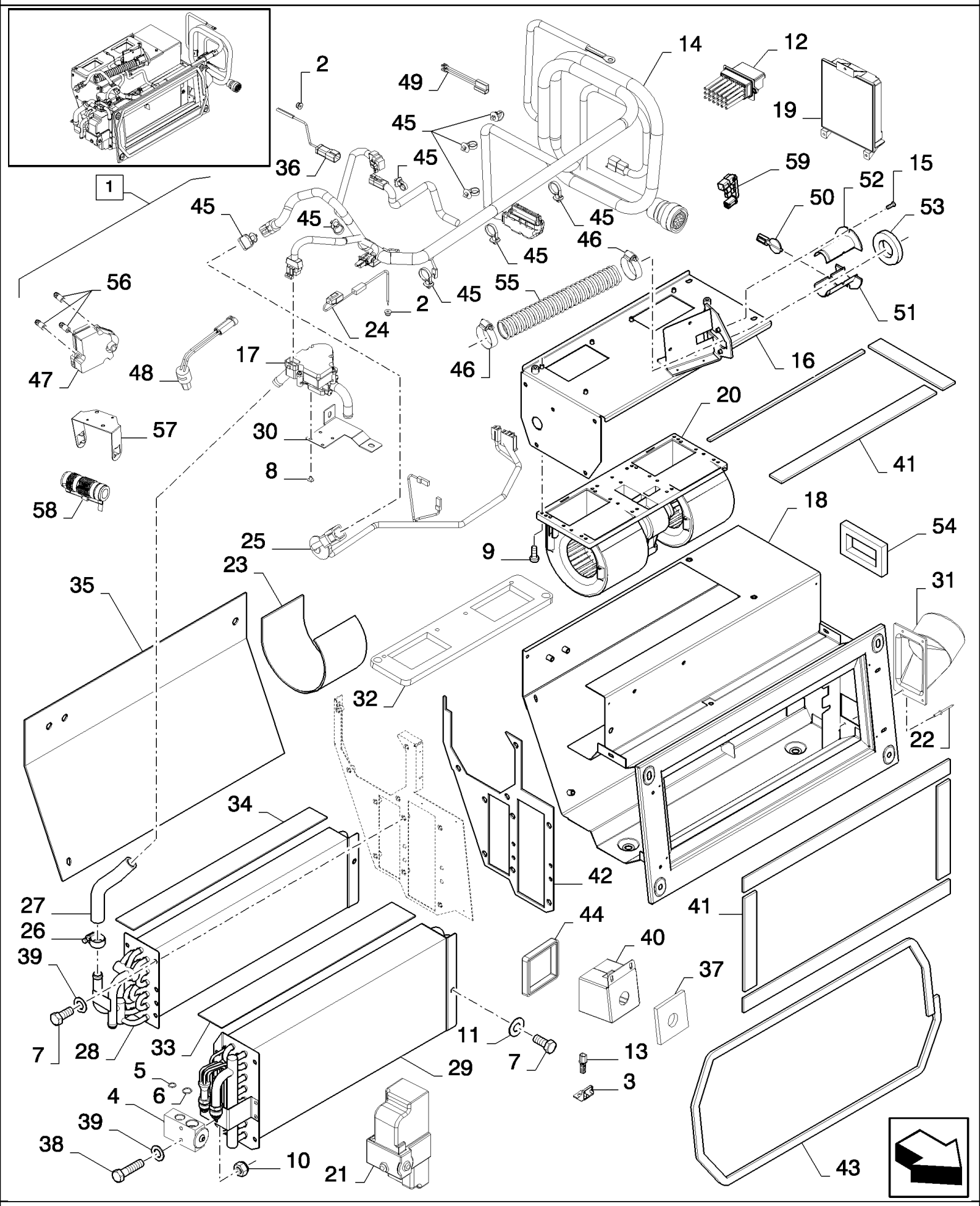

CX880 COMBINE - BASE UNIT (2/01-)

10.21(02) AIR CONDITIONER UNIT - D480

ссылка	Номер детали	Кол-во	Описание
1	87337651	1	AIR CONDITIONER, , AUTOMATIC CONTROL
1	87337656	1	AIR CONDITIONER, , AUTOMATIC CONTROL, WITH COOLBOX, WITH HEATING
1	87337657	1	AIR CONDITIONER, , MANUAL CONTROL, WITH COOLBOX
2	84320222	2	GROMMET,
3	87318294	1	CLIP, , AUTOMATIC CONTROL
4	386535A	1	
5	84817009	1	O-RING,
6	9827059	1	O-RING,
7	86508568	16	SCREW, Hex, M6 x 16, 8.8,
8	87355939	4	SCREW, , AUTOMATIC CONTROL, WITH COOLBOX, WITH HEATING
9	44334	8	SCREW, Cross Pan Hd, M4 x 12,
10	412152	1	NUT, LOCK, M6 x 1, Cl 8.8,
11	NSS	2	NOT SERVICED SEPARATELY,
12	87306706	1	TERMINAL CONNECTOR, , AUTOMATIC CONTROL
13	82037684	1	SENSOR, , AUTOMATIC CONTROL
14	87362724	1	HARNESS, WIRE, , AUTOMATIC CONTROL
14	87362970	1	HARNESS, WIRE, , WITH COOLBOX
15	NSS	2	NOT SERVICED SEPARATELY, M4x12
16	87355941	1	HOUSING,
17	87369070	1	VALVE, , WITH COOLBOX, AUTOMATIC CONTROL, WITH HEATING
18	87355943	1	HOUSING,
19	87282416	1	AIR CONTROL, , AUTOMATIC CONTROL
20	82022334	1	BLOWER,
21	84320230	AR	TAPE, ADHESIVE, L=1M
22	NSS	4	NOT SERVICED SEPARATELY, RIVET
23	84434934	1	SEAL, , AUTOMATIC CONTROL
24	84078518	1	THERMOSTAT, , AUTOMATIC CONTROL, WITH COOLBOX, WITH HEATING
24	87362978	1	THERMOSTAT, , MANUAL CONTROL, WITH COOLBOX
24	87282822	1	SENSOR, , AUTOMATIC CONTROL
25	87362975	1	HARNESS, WIRE, , WITH COOLBOX
25	87355948	1	HARNESS, WIRE, , WITHOUT COOLBOX
26	87000223	2	CLAMP, HOSE, , AUTOMATIC CONTROL, WITH COOLBOX, WITH HEATING
27	86997298	AR	HOSE, L=153MM, WITH HEATING, WITH COOLBOX, AUTOMATIC CONTROL
28	86523241	1	HEATER,
29	87355949	1	EVAPORATOR,
30	84074997	1	BRACKET, , AUTOMATIC CONTROL
31	87362249	1	DUCT, AIR,
32	87355950	1	SEAL,
33	84320227	1	SEAL,
34	84320228	1	SEAL, , AUTOMATIC CONTROL
35	84320231	1	SEAL,
36	NSS	1	NOT SERVICED SEPARATELY, SENSOR, air temperature
37	87034252	1	SEAL, , AUTOMATIC CONTROL
38	43118	1	BOLT, Hex, M6 x 40, 8.8,

ссылка	Номер детали	Кол-во	Описание
39	9824259	16	WASHER, M6 x 12 x 1.6,
40	87367963	1	VENTURI, , AUTOMATIC CONTROL
41	84015383	AR	SEAL,
42	84320226	1	SEAL,
43	84320224	1	SEAL,
44	87369069	1	GASKET, , AUTOMATIC CONTROL
45	84320229	9	STRAP, CABLE,
46	NSS	2	NOT SERVICED SEPARATELY, CLAMP
47	NSS	1	NOT SERVICED SEPARATELY, ACTUATOR
48	87000228	1	SWITCH, PRESSURE,
49	NSS	1	NOT SERVICED SEPARATELY, HARNESS, PRESSURIZER JUMPER
50	84989880	1	FLAP, , AUTOMATIC CONTROL
51	87359257	1	DUCT, AIR, , WITH COOLBOX
51	84989881	1	DUCT, AIR, , WITHOUT COOLBOX
52	87359258	1	DUCT, AIR, , WITH COOLBOX
52	84989882	1	DUCT, AIR, , WITHOUT COOLBOX
53	84989883	1	SEAL, , WITH COOLBOX
53	84074262	1	SEAL, , WITHOUT COOLBOX
54	84074262	1	SEAL, , WITH COOLBOX
54	84989883	1	SEAL, , WITHOUT COOLBOX
55	84989884	1	HOSE,
56	87359259	3	SPACER, , AUTOMATIC CONTROL
57	87362961	1	BRACKET, , WITH COOLBOX
58	87362967	1	RESISTOR, , WITH COOLBOX
59	84439813	1	HARNESS, WIRE, , MANUAL CONTROL

10.22(01) AIR FILTER FOR AIR CONDITIONER

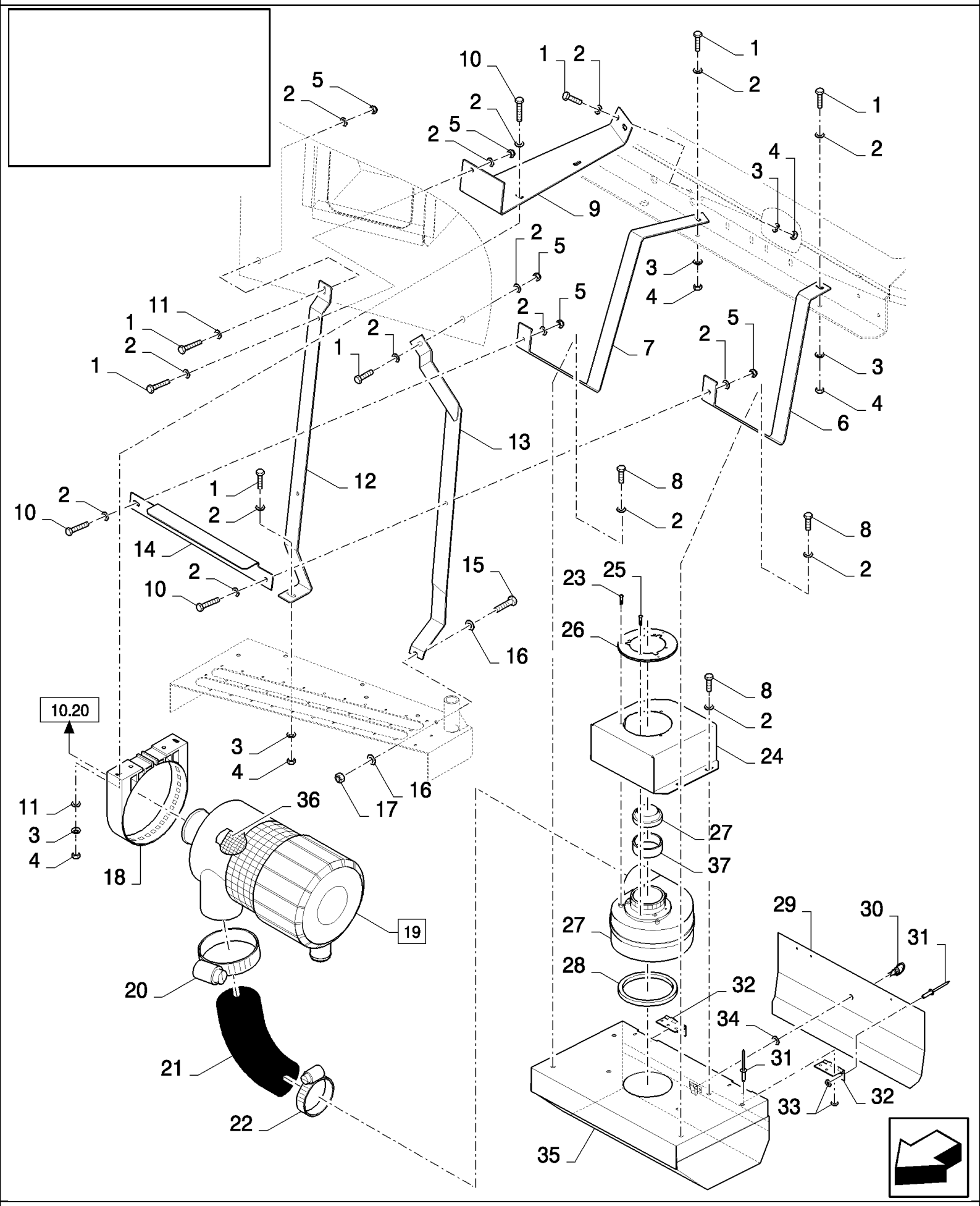

CX880 COMBINE - BASE UNIT (2/01-)

10.22(01) AIR FILTER FOR AIR CONDITIONER

ссылка	Номер детали	Кол-во	Описание
1	120104	8	SCREW, Hex, M8 x 20, 8.8,
2	378243	23	WASHER, M8,
3	322358	7	WASHER, SPRING, Belleville, M8,
4	89706690	7	NUT, M8, Cl 8,
5	86629542	5	NUT, LOCK, M8 x 1.25, Cl 8,
6	84334735	1	SUPPORT,
7	84435219	1	SUPPORT,
9	84076922	1	SUPPORT, , BSN C301
9	84444373	1	SUPPORT, , ASN D302
10	43128	4	BOLT, Hex, M8 x 30, 8.8,
11	140041	3	WASHER, M8 x 28 x 3,
12	84433764	1	SUPPORT, , BSN C301
12	84444371	1	SUPPORT, , ASN D302
13	84433761	1	SUPPORT,
14	84076929	1	SUPPORT,
15	43138	1	SCREW, Hex, M10 x 20, 8.8, Full Thd,
16	140017	2	WASHER, M10 x 20 x 2,
17	100016	1	NUT, M10, Cl 8,
18	84057675	1	SUPPORT,
19	84334657	1	AIR CLEANER, (36)
20	381144	1	CLAMP, HOSE, #60, 3.31/4.25 Type F Worm,
21	84320216	1	HOSE,
22	419950	1	CLAMP, HOSE,
23	84043237	3	SCREW,
24	84076921	1	PLATE, MOUNTING,
25	84043238	4	SCREW,
26	84437229	1	RING, , BSN C301
26	84446072	1	RING, , ASN D302
27	84056300	1	BLOWER,
28	84334696	1	SEAL,
29	84076925	1	COVER,
30	89819681	1	PANEL, DOOR,
31	445394	8	RIVET, Pop, M4.8 x 12.7,
32	9833212	2	HINGE,
33	140182	8	WASHER, M5 x 18 x 2, 4MM
34	84000656	1	WASHER,
35	84076940	1	HOUSING,
36	84036676	1	FILTER, AIR,
37	NS	AR	NOT SERVICED, HOSE
8	16043224	7	BOLT, Hex, M8 x 16, 8.8, Full Thd,

10.23(01) STEP, RH

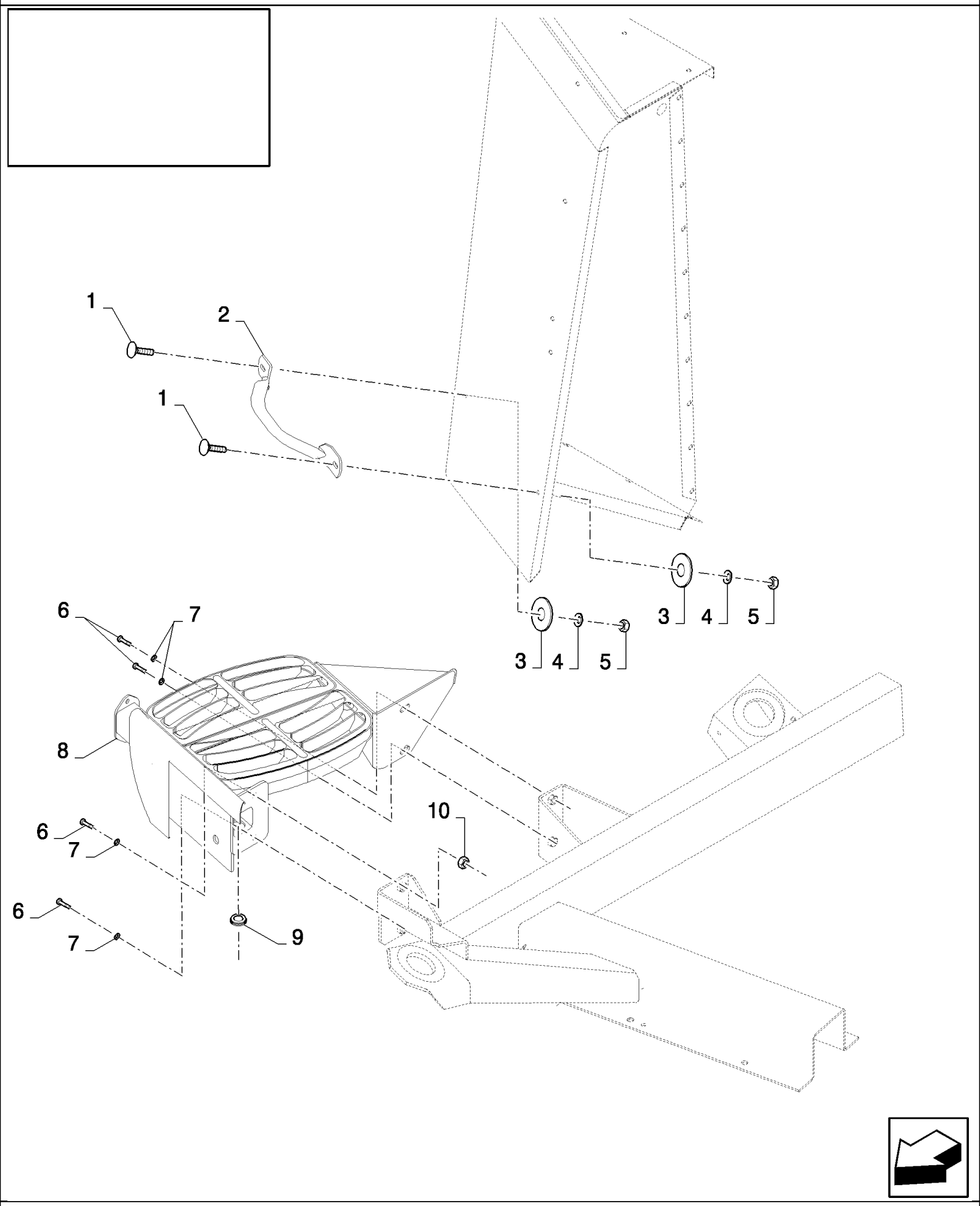

CX880 COMBINE - BASE UNIT (2/01-)

10.23(01) STEP, RH

ссылка	Номер детали	Кол-во	Описание
1	308761	2	BOLT, CARRIAGE, Short NK, M8 x 25, Cl8.8, Full Thd,
2	84431209	1	HANDLE GRIP,
3	140042	2	WASHER, M10 x 34 x 3,
4	322358	2	WASHER, SPRING, Belleville, M8,
5	89706690	2	NUT, M8, Cl 8,
6	43140	4	BOLT, Hex, M10 x 30, 8.8, Full Thd,
7	140045	4	WASHER, SPRING, Belleville, M10,
8	84607434	1	STEP, , FOR 3 M VERSION ONLY
8	84607436	1	STEP, , FOR 3.3 M VERSION ONLY
9	452802	1	GROMMET,
10	100016	4	NUT, M10, Cl 8,

10.24(01) OPERATOR'S PLATFORM

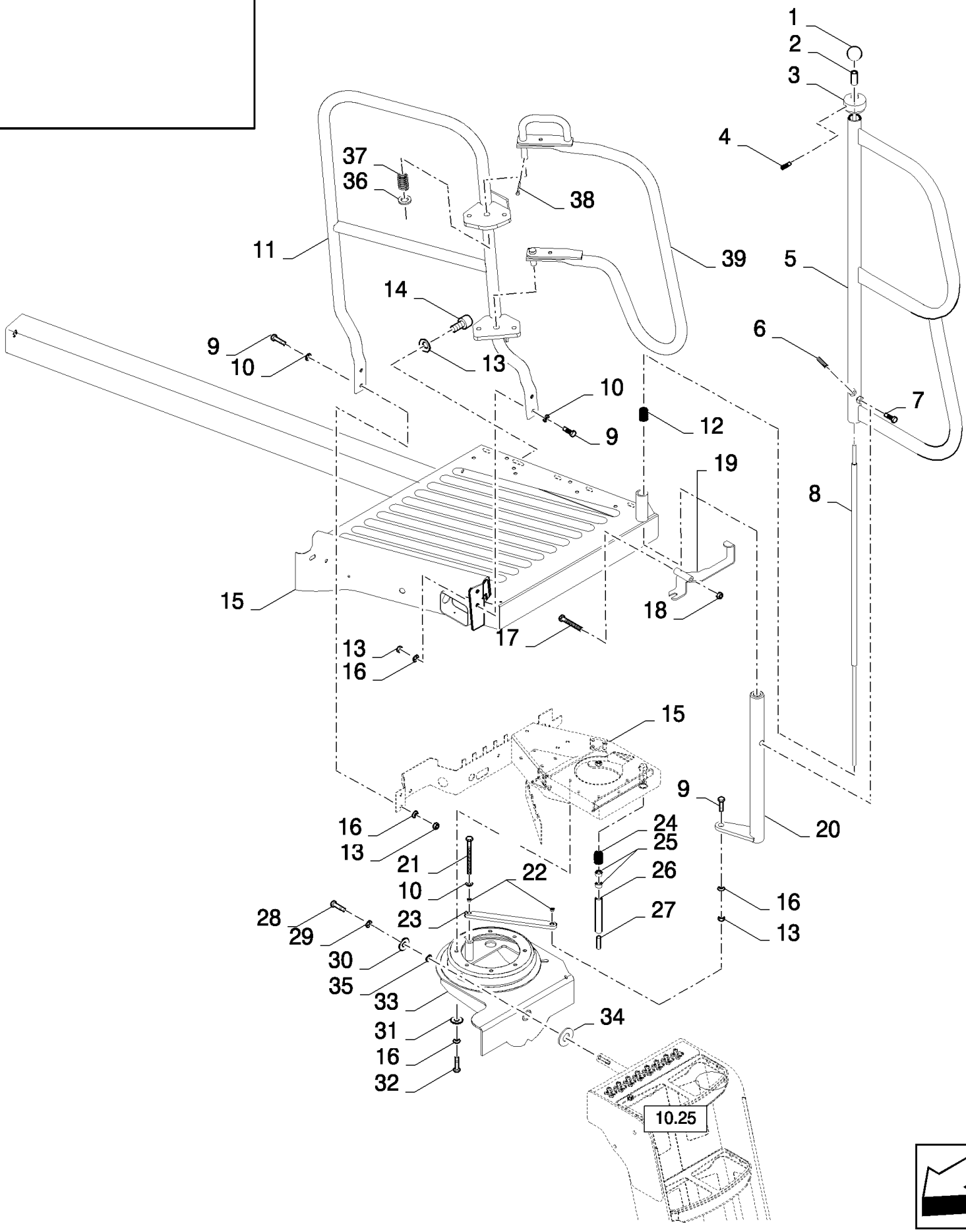

CX880 COMBINE - BASE UNIT (2/01-)

10.24(01) OPERATOR'S PLATFORM

ссылка	Номер детали	Кол-во	Описание
1	84056709	1	KNOB,
2	9831157	1	BUSHING,
3	86615493	1	PLUG,
4	120242	1	SET SCREW, Hex Soc, M6 x 10, Cup Pt,
5	86615599	1	HANDRAIL, , BSN C323
5	84447099	1	HANDRAIL, , ASN D324
6	300480	1	SET SCREW, Hex Soc, M10 x 12, Cup Pt, , BSN C323
6	300482	2	SET SCREW, Hex Soc, M10 x 20, Cone Pt, M10x20, ASN D324
7	300383	1	BOLT, Hex, M10 x 16, 8.8, Full Thd, , BSN C323
7	43138	2	SCREW, Hex, M10 x 20, 8.8, Full Thd, , ASN D324
8	86615579	1	ROD,
9	43139	5	SCREW, Hex, M10 x 25, 8.8, Full Thd, M10x25
10	86511323	5	WASHER, M10 x 20 x 2,
11	86598260	1	HANDRAIL, , BSN C347
11	84449149	1	HANDRAIL, , ASN D348
12	80918027	1	SPRING,
13	100016	AR	NUT, M10, Cl 8,
14	190029	1	INSULATOR BLOCK, , FOR 3 M VERSION ONLY
15	86611321	1	PLATFORM,
16	140045	11	WASHER, SPRING, Belleville, M10,
17	120073	1	BOLT, Hex, M10 x 80, 8.8,
18	100037	1	NUT, M10 x 1.5, Cl 8,
19	84437664	1	PLATE,
20	86615047	1	ROD, , BSN C323
20	84447212	1	ROD, , ASN D324
21	120075	1	SCREW, Hex, M10 x 100, 8.8,
22	86615036	2	SPACER,
23	86615035	1	PLATE, , BSN C323
23	84447211	1	PLATE, , ASN D324
24	226829	1	SPRING,
25	399994	2	BUSHING,
26	86611680	1	PIN,
27	86615492	1	PIN,
28	300389	1	BOLT, Hex, M12 x 35, 8.8, Full Thd,
29	140046	1	WASHER, Belleville, M12,
30	9511052	1	WASHER, M12 x 44 x 4, 12MM
31	140042	6	WASHER, M10 x 34 x 3,
32	43140	6	BOLT, Hex, M10 x 30, 8.8, Full Thd,
33	86606336	1	BEARING, BALL,
34	86613007	1	WASHER,
35	86622500	3	WASHER, , ASN D340
36	86625266	1	WASHER, M17.5 x 30 x 4, HT, , ASN D348
37	87105186	1	SPRING, , ASN D348
38	130003	1	PIN, SPLIT (COTTER), M3.2 x 20, , ASN D348

ссылка	Номер детали	Кол-во	Описание
39	84449151	1	HANDRAIL, , ASN D348

10.25(01) OPERATOR'S PLATFORM LADDER

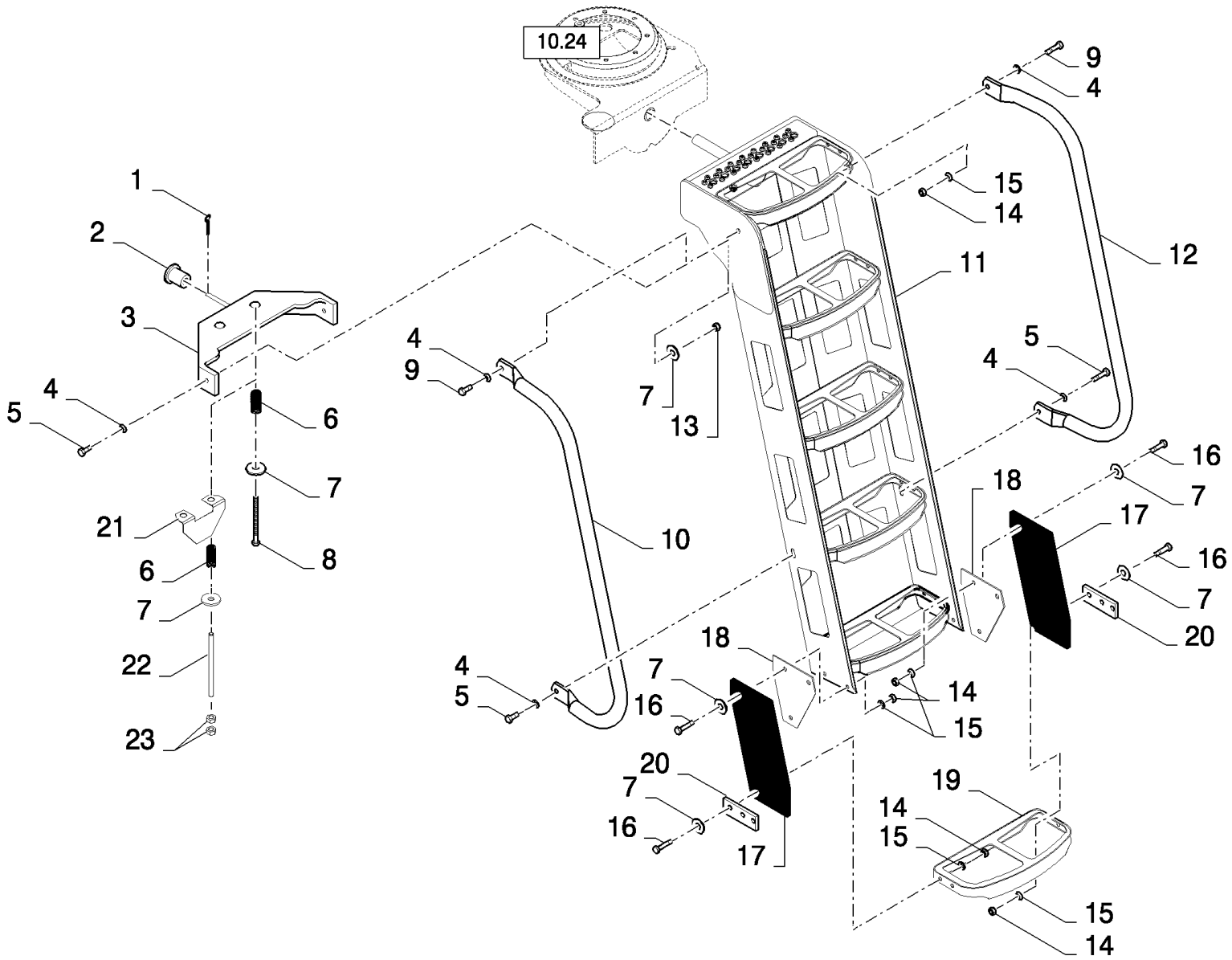

CX880 COMBINE - BASE UNIT (2/01-)

10.25(01) OPERATOR'S PLATFORM LADDER

ссылка	Номер детали	Кол-во	Описание
1	130007	1	PIN, SPLIT (COTTER), M4 x 25,
2	913654	1	BUSHING,
3	86613636	1	SUPPORT,
4	86511323	6	WASHER, M10 x 20 x 2,
5	43139	4	SCREW, Hex, M10 x 25, 8.8, Full Thd, M10x25
6	9509233	2	SPRING,
7	140042	14	WASHER, M10 x 34 x 3,
8	86508575	2	BOLT, Hex, M10 x 130, 8.8, , BSN C339
9	43140	2	BOLT, Hex, M10 x 30, 8.8, Full Thd,
10	84064346	1	HANDRAIL, , FOR 3.3 M VERSION ONLY, BSN C499
10	86607592	1	HANDRAIL, , FOR 3.3 M VERSION ONLY, ASN D500
10	86607592	1	HANDRAIL, , FOR 3 M VERSION ONLY, BSN C257
10	84064346	1	HANDRAIL, , FOR 3 M VERSION ONLY, BSN F258499
10	86607592	1	HANDRAIL, , FOR 3 M VERSION ONLY, ASN D500
11	84440694	1	LADDER, , BSN C281
11	84443535	1	LADDER, , BSN F282339
11	87024522	1	LADDER, , ASN D340
12	86594509	1	HANDRAIL, , FOR 3.3 M VERSION ONLY, BSN C499
12	86607637	1	HANDRAIL, , FOR 3.3 M VERSION ONLY, ASN D500
12	86607637	1	HANDRAIL, , FOR 3 M VERSION ONLY, BSN C257
12	86594509	1	HANDRAIL, , FOR 3 M VERSION ONLY, BSN F258499
12	86607637	1	HANDRAIL, , FOR 3 M VERSION ONLY, ASN D500
13	100037	2	NUT, M10 x 1.5, Cl 8,
14	100016	9	NUT, M10, Cl 8,
15	140045	9	WASHER, SPRING, Belleville, M10,
16	9706704	10	BOLT, Hex, M10 x 35, 8.8, Full Thd,
17	84440423	2	CANVAS, , BSN C339
17	87024104	2	HANGER, , ASN D340
18	84440430	2	PLATE, , BSN C339
19	84433213	1	STEP, , BSN C281
19	84443533	1	STEP, , ASN D282
20	84442830	2	BRACKET, , BSN C339
20	87024309	4	BRACKET, , ASN D340
21	87025064	1	BRACKET, , ASN D340
22	87025068	1	STUD, , ASN D340
23	100016	4	NUT, M10, Cl 8, , ASN D340

10.26(01) OPERATOR'S PLATFORM LADDER WITH TRACKS

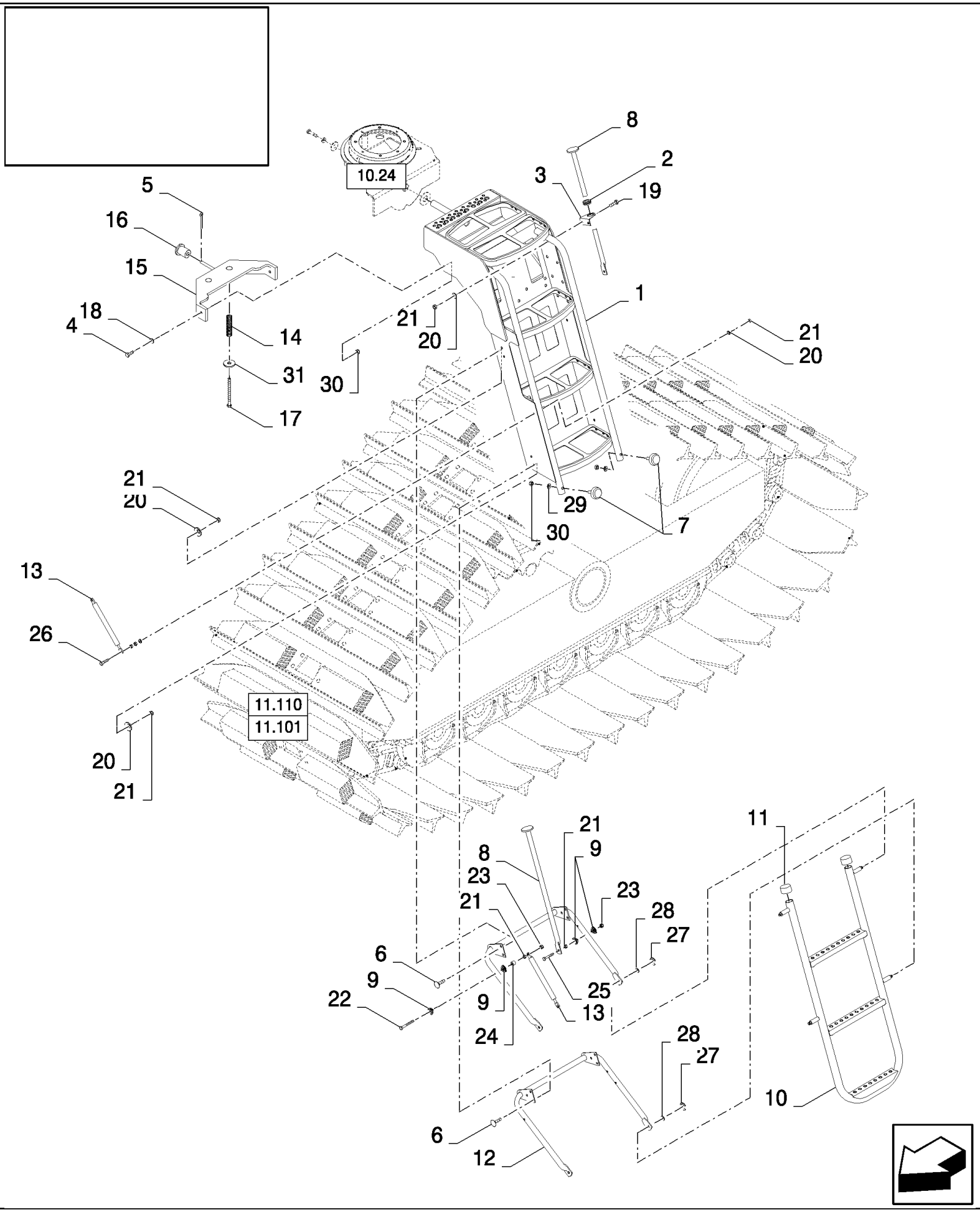

CX880 COMBINE - BASE UNIT (2/01-)

10.26(01) OPERATOR'S PLATFORM LADDER WITH TRACKS

ссылка	Номер детали	Кол-во	Описание
1	84444841	1	LADDER,
2	173011	1	GROMMET,
3	84446052	1	SUPPORT,
4	43139	2	SCREW, Hex, M10 x 25, 8.8, Full Thd, M10x25
5	130007	1	PIN, SPLIT (COTTER), M4 x 25,
6	86507486	10	BOLT, CARRIAGE, Short NK, M8 x 20, Cl8.8, Full Thd,
7	84440416	2	INSULATOR BLOCK,
8	84444868	1	TUBE,
9	333962	6	CLAMP,
10	84444816	1	LADDER,
11	84014501	2	PLUG,
12	84444826	2	TUBE,
13	89832424	1	SHOCK ABSORBER,
14	9509233	2	SPRING,
15	86613636	1	SUPPORT,
16	913654	1	BUSHING,
17	86508575	2	BOLT, Hex, M10 x 130, 8.8,
18	86511323	2	WASHER, M10 x 20 x 2,
19	120104	2	SCREW, Hex, M8 x 20, 8.8,
20	322358	16	WASHER, SPRING, Belleville, M8,
21	89706690	23	NUT, M8, Cl 8,
22	86977784	2	SCREW, M8x60
23	86629542	3	NUT, LOCK, M8 x 1.25, Cl 8,
24	9838548	2	BUSHING,
25	120107	1	BOLT, Hex, M8 x 50, 8.8, Full Thd,
26	412479	2	BOLT, Hex, M8 x 35, 8.8,
27	89992582	4	CIRCLIP,
28	378244	4	WASHER, M10,
29	140045	2	WASHER, SPRING, Belleville, M10,
30	100037	4	NUT, M10 x 1.5, Cl 8,
31	140042	4	WASHER, M10 x 34 x 3,

10.27(01) PLATFORM EXTENSIONS

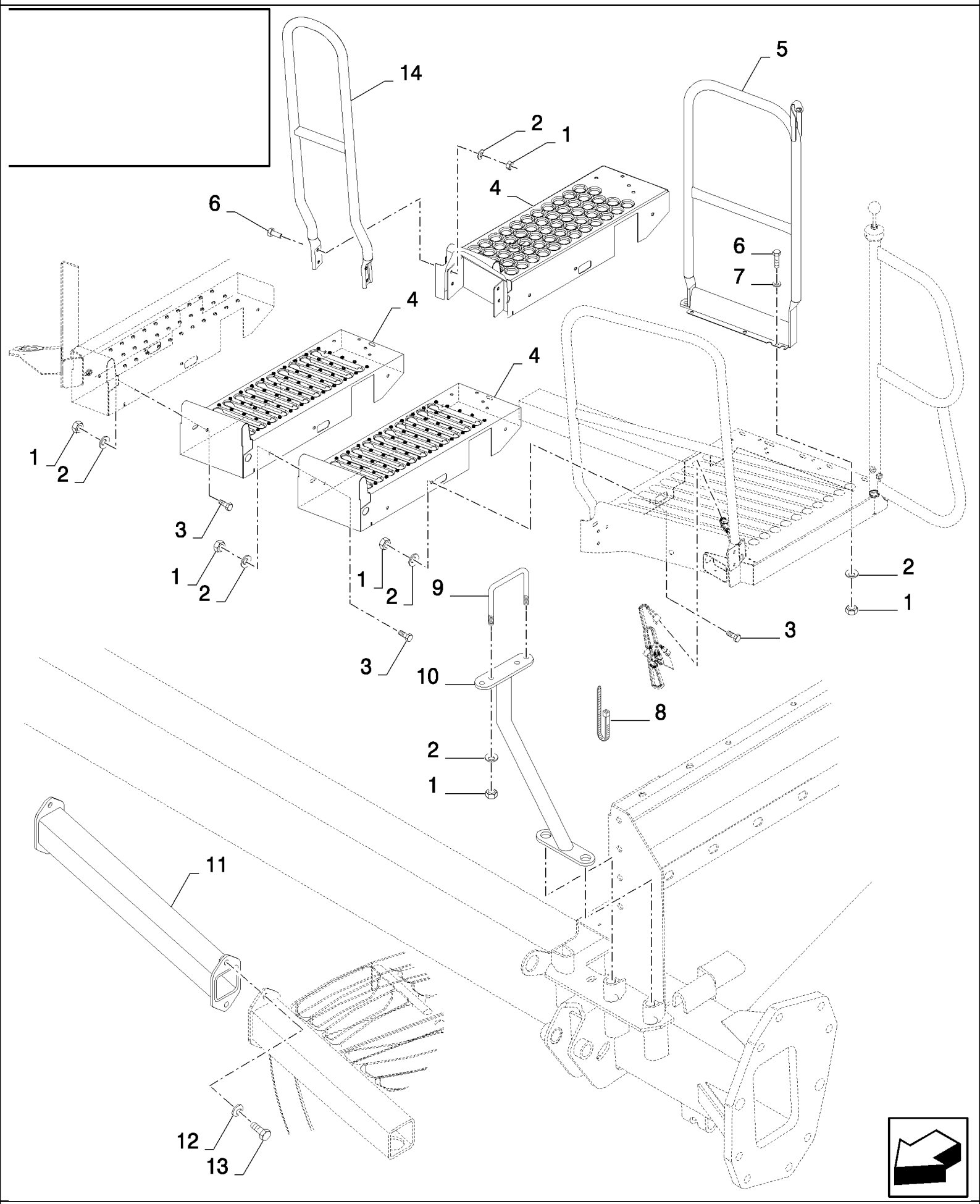

CX880 COMBINE - BASE UNIT (2/01-)

10.27(01) PLATFORM EXTENSIONS

ссылка	Номер детали	Кол-во	Описание
1	100016	AR	NUT, M10, Cl 8,
2	140045	AR	WASHER, SPRING, Belleville, M10,
3	43138	AR	SCREW, Hex, M10 x 20, 8.8, Full Thd,
4	86617041	3	PLATFORM, , FOR 750MM ONLY, BSN C347
4	87105996	3	PLATFORM, , FOR 750MM ONLY, ASN D348
4	86617041	2	PLATFORM, , FOR 500MM ONLY
4	86617041	1	PLATFORM, , FOR 250MM ONLY
5	86610972	1	HANDRAIL, , FOR 750MM ONLY
5	86618604	1	HANDRAIL, , FOR 500MM ONLY
5	86592225	1	HANDRAIL, , FOR 250MM ONLY
6	43139	AR	SCREW, Hex, M10 x 25, 8.8, Full Thd, M10x25
7	86511323	AR	WASHER, M10 x 20 x 2,
8	86566989	AR	STRAP, CABLE,
9	84439668	1	U-BOLT,
10	84607470	1	SUPPORT, , BSN C281
10	84442674	1	SUPPORT, , ASN D282
11	84607458	1	EXTENSION, , FOR 750MM ONLY
11	84607456	1	EXTENSION, , FOR 500MM ONLY
11	84607454	1	EXTENSION, , FOR 250MM ONLY
12	322358	2	WASHER, SPRING, Belleville, M8,
13	120104	2	SCREW, Hex, M8 x 20, 8.8,
14	87106374	2	HANDRAIL, , FOR 750MM ONLY, ASN D348

10.28(01) OPERATOR'S PLATFORM

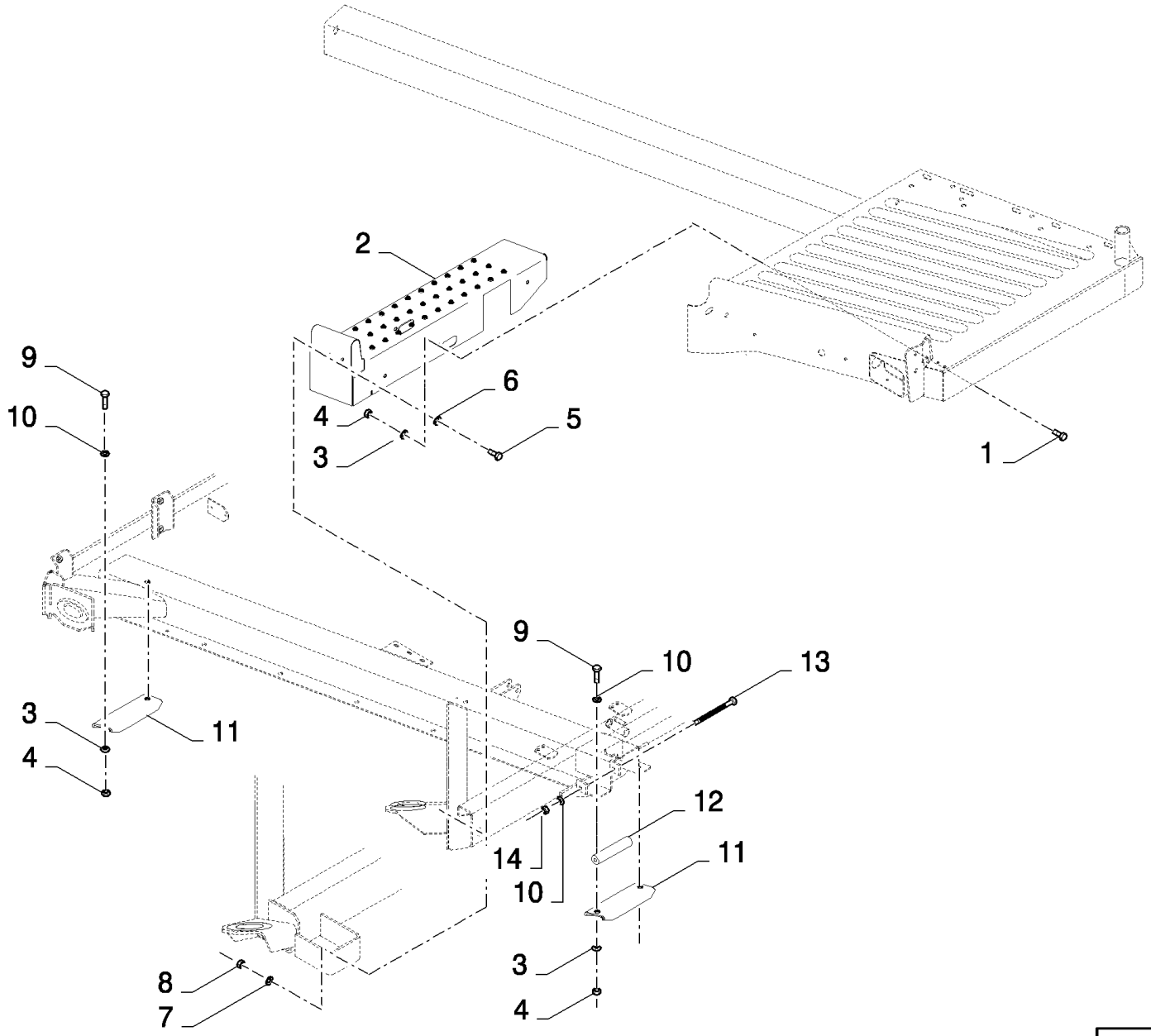

10.28(01) OPERATOR'S PLATFORM

ссылка	Номер детали	Кол-во	Описание
1	43138	3	SCREW, Hex, M10 x 20, 8.8, Full Thd, , FOR 3.3 M VERSION ONLY
2	86605444	1	PLATFORM, 145MM, FOR 3.3 M VERSION ONLY
3	140045	AR	WASHER, SPRING, Belleville, M10,
4	100016	AR	NUT, M10, Cl 8,
5	43151	1	SCREW, Hex, M12 x 20, 8.8, Full Thd,
6	86511324	1	WASHER, M12 x 24 x 2.5,
7	140046	1	WASHER, Belleville, M12,
8	9706685	1	NUT, M12, Cl 8,
9	43139	4	SCREW, Hex, M10 x 25, 8.8, Full Thd, M10x25
10	86511323	5	WASHER, M10 x 20 x 2,
11	86615600	2	PLATE,
12	84989474	1	ROLLER,
13	86509596	1	BOLT, Hex, M10 x 160, 8.8,
14	100037	1	NUT, M10 x 1.5, Cl 8,

10.29(01) FIRE EXTINGUISHER

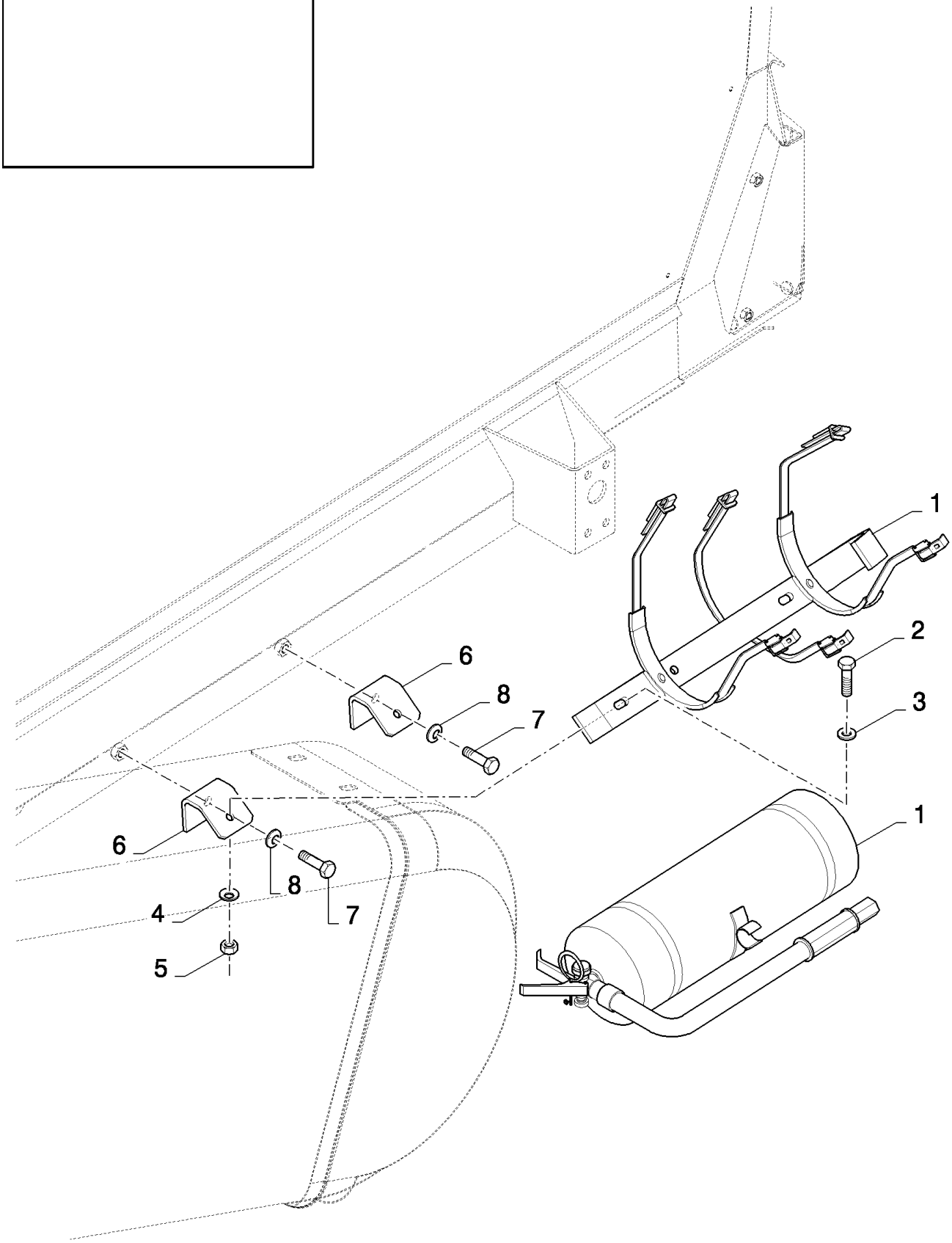

CX880 COMBINE - BASE UNIT (2/01-)

10.29(01) FIRE EXTINGUISHER

ссылка	Номер детали	Кол-во	Описание
1	NS	1	NOT SERVICED, Fire extinguisher
2	120104	3	SCREW, Hex, M8 x 20, 8.8,
3	140016	3	WASHER, M8 x 16 x 1.6,
4	412650	3	WASHER, Belleville, M8,
5	89706690	3	NUT, M8, Cl 8,
6	84440063	2	SUPPORT,
7	43138	2	SCREW, Hex, M10 x 20, 8.8, Full Thd,
8	140045	2	WASHER, SPRING, Belleville, M10,

WHEELS/TRACKS	**ROUES/CHENILLES**	**RUEDAS/ORUGAS**	**HJUL/BÆLTETRÆK**
RUOTI/CINGOLATURA	**RÄDER/RAUPENKETTEN**	**RODAS/RASTOS**	**WIELEN/RUPSBANDEN**

SEC. 11

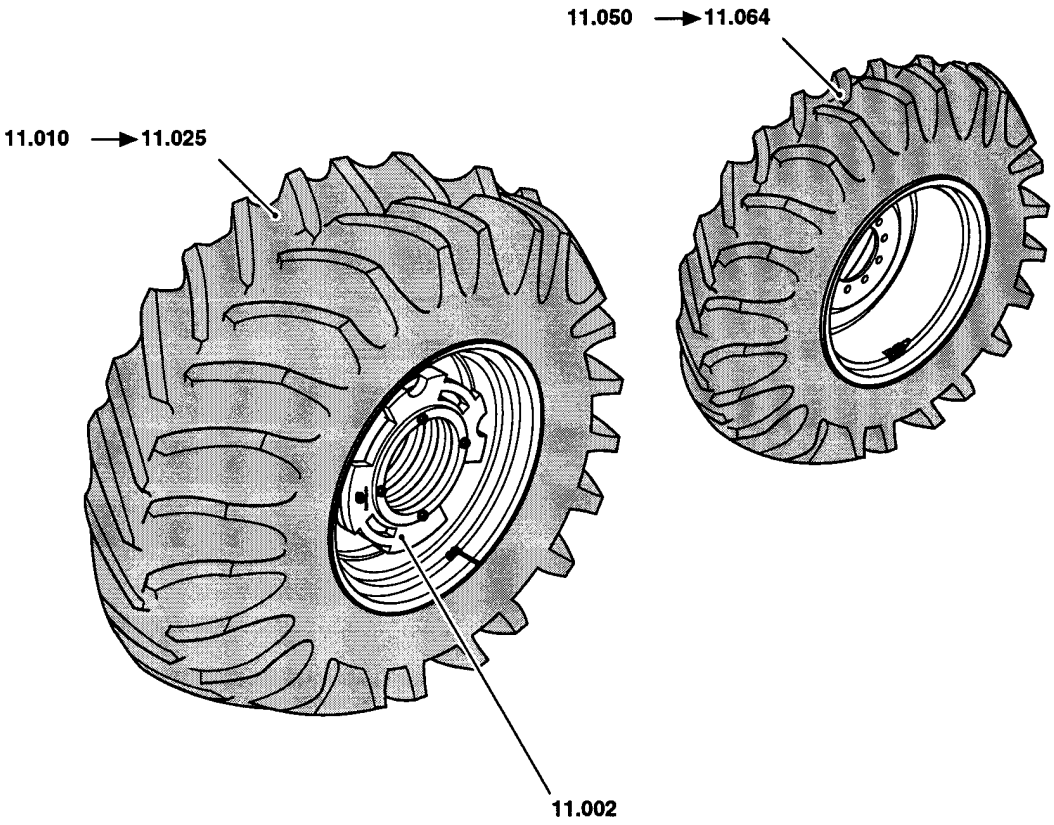

ссылка	Номер детали	Кол-во	Описание

11.001(01) INSTALLATION KIT FOR DOUBLE WHEEL RIMS

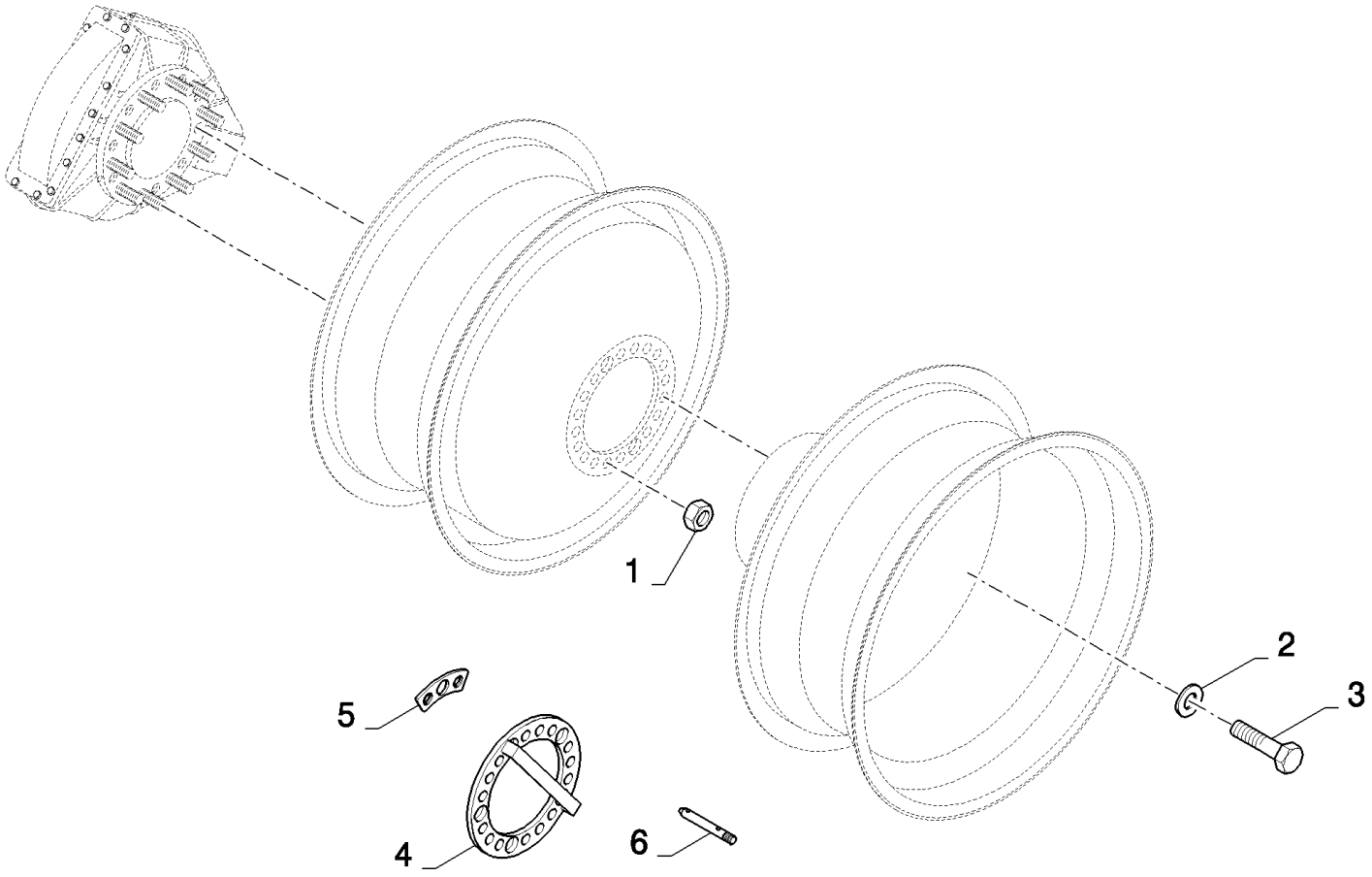

CX880 COMBINE - BASE UNIT (2/01-)

11.001(01) INSTALLATION KIT FOR DOUBLE WHEEL RIMS

ссылка	Номер детали	Кол-во	Описание
1	336945	10	NUT, M22 x 1.5, Cl 10,
2	9850384	20	WASHER,
3	84076627	20	BOLT, Hex, M22 x 1.5 x 65, 8.8,
3	87283525	20	BOLT, M22x1.5x95
4	87280385	AR	SPACER,
5	87283501	AR	SPACER,
6	87283521	AR	STUD,

11.002(01) COUNTERWEIGHTS

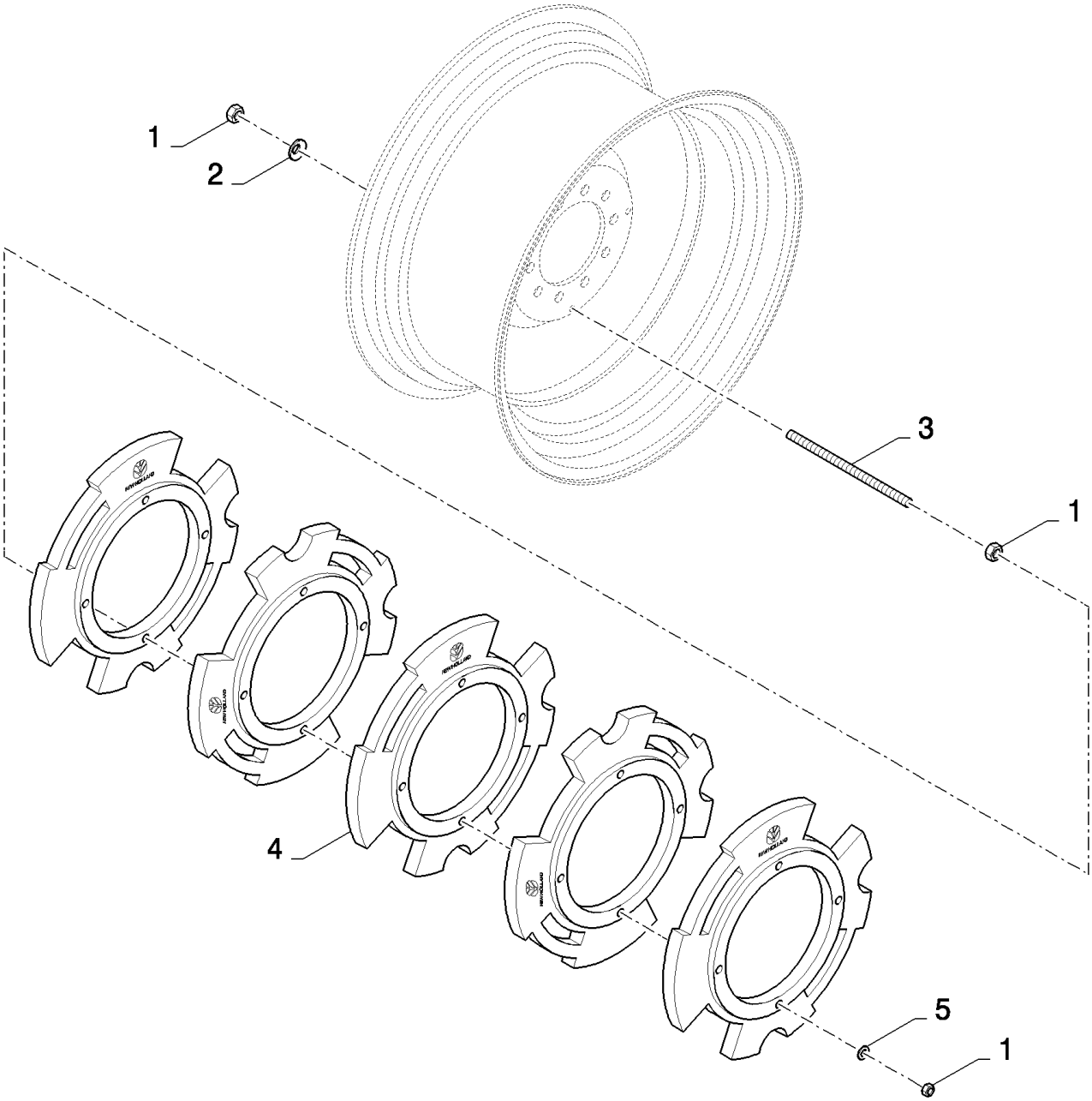

CX880 COMBINE - BASE UNIT (2/01-)

11.002(01) COUNTERWEIGHTS

ссылка	Номер детали	Кол-во	Описание
1	9706685	24	NUT, M12, Cl 8,
2	300913	8	WASHER, LOCK,
3	84989794	8	ROD, THREADED, M12x220
3	84989795	8	ROD, THREADED, M12x383
3	84989796	8	ROD, THREADED, M12x528
4	84075681	AR	WEIGHT, COUNTER, 20KG
5	394630	8	WASHER,

11.010(01) TRACTION WHEELS : DH35.5L-32-12 PR-CHSG-R-2

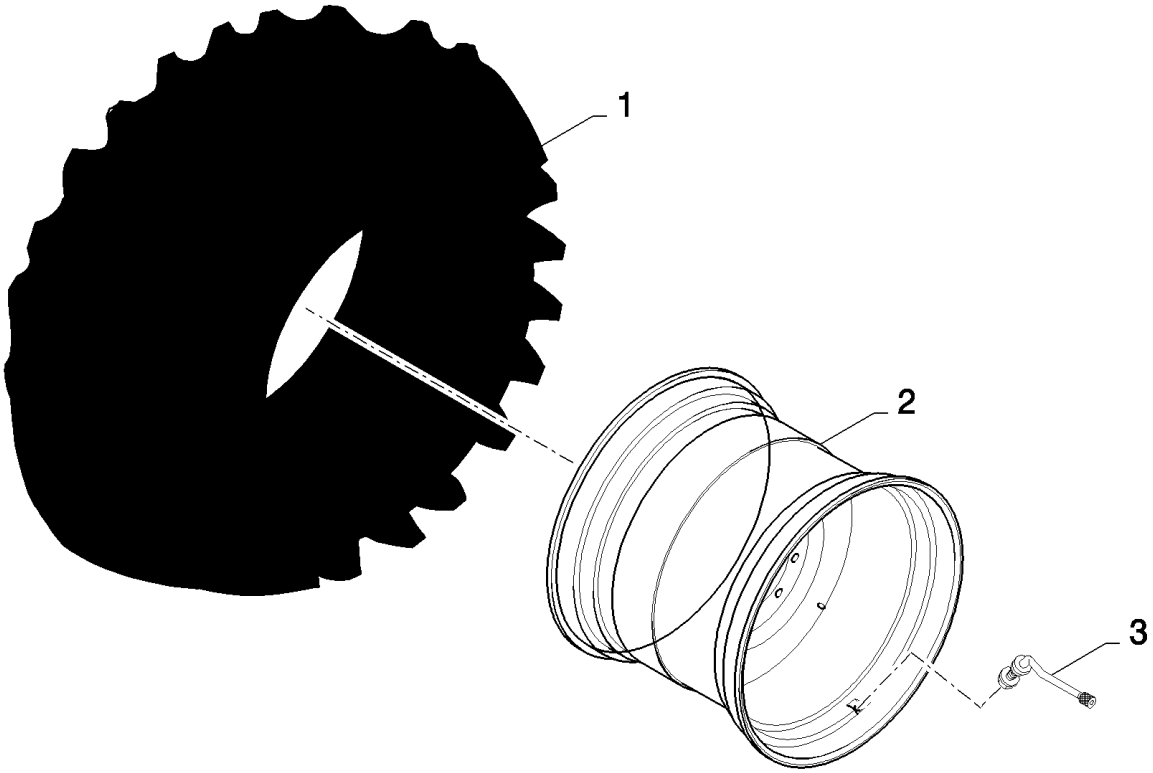

CX880 COMBINE - BASE UNIT (2/01-)

11.010(01) TRACTION WHEELS : DH35.5L-32-12 PR-CHSG-R-2

ссылка	Номер детали	Кол-во	Описание
1	84100136	1	TYRE/TIRE,
2	84989714	1	RIM, DWW 31Ax32
3	397236	1	VALVE STEM,

11.011(01) TRACTION WHEELS : 68X50,00-32-16-PR-STGXT-R1

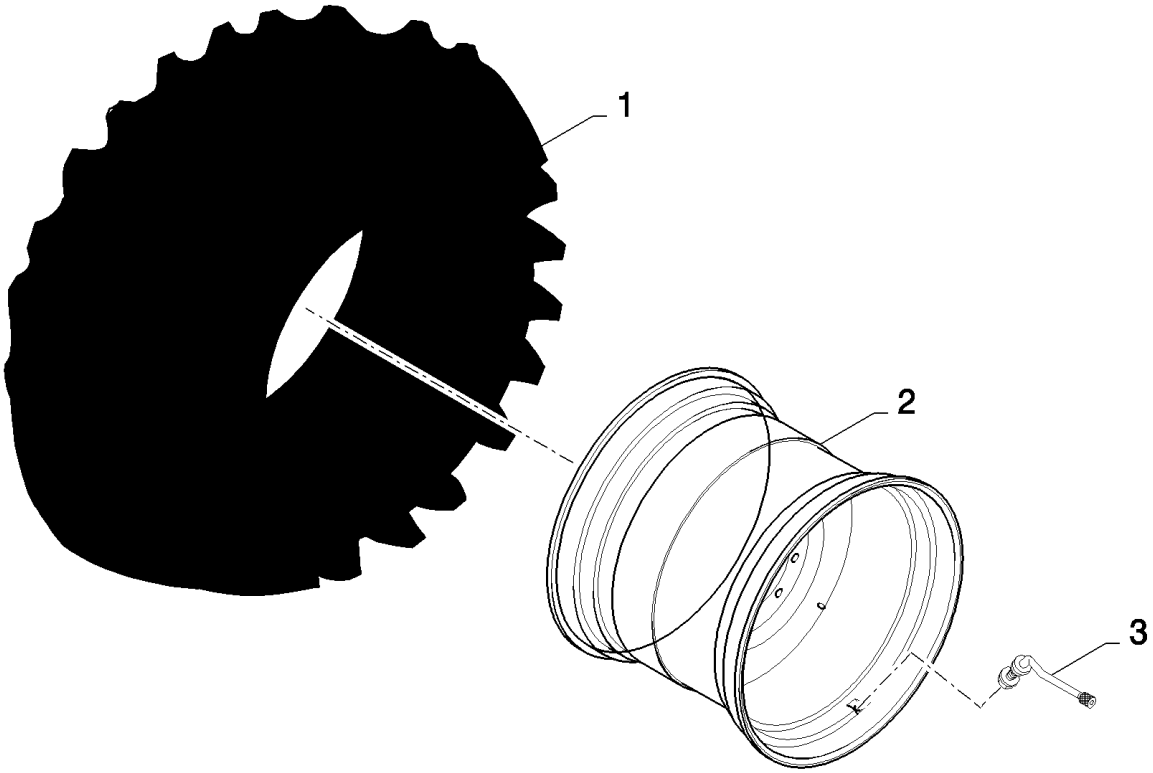

CX880 COMBINE - BASE UNIT (2/01-)

11.011(01) TRACTION WHEELS : 68X50,00-32-16-PR-STGXT-R1

ссылка	Номер детали	Кол-во	Описание
1	84100146	1	TYRE/TIRE,
2	84989724	1	RIM, DWW 44Ax32
3	397236	1	VALVE STEM,

11.014(01) TRACTION WHEELS : 20.8-42-14PR-CHSG-R2

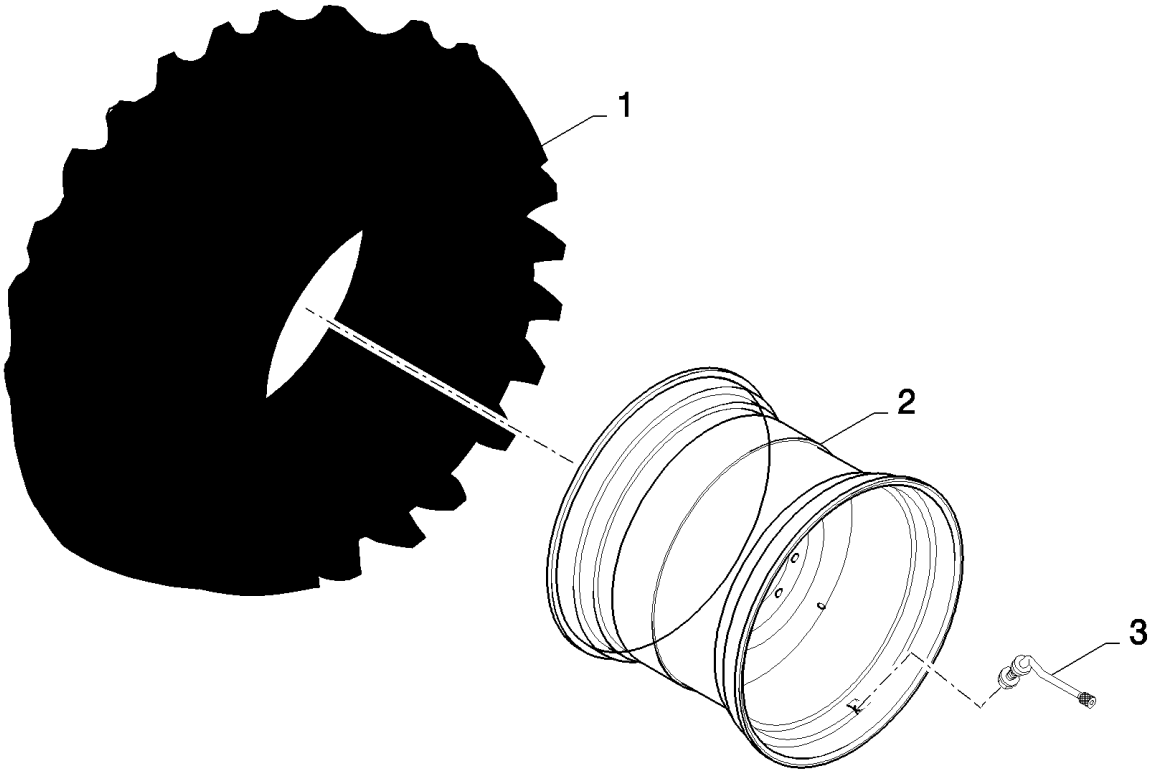

CX880 COMBINE - BASE UNIT (2/01-)

11.014(01) TRACTION WHEELS : 20.8-42-14PR-CHSG-R2

ссылка	Номер детали	Кол-во	Описание
1	84100148	1	TYRE/TIRE,
2	84989716	1	RIM, DD 18x42
3	397236	1	VALVE STEM,

11.015(01) TRACTION WHEELS : 20.8R42-155A8-RAT23-R-1

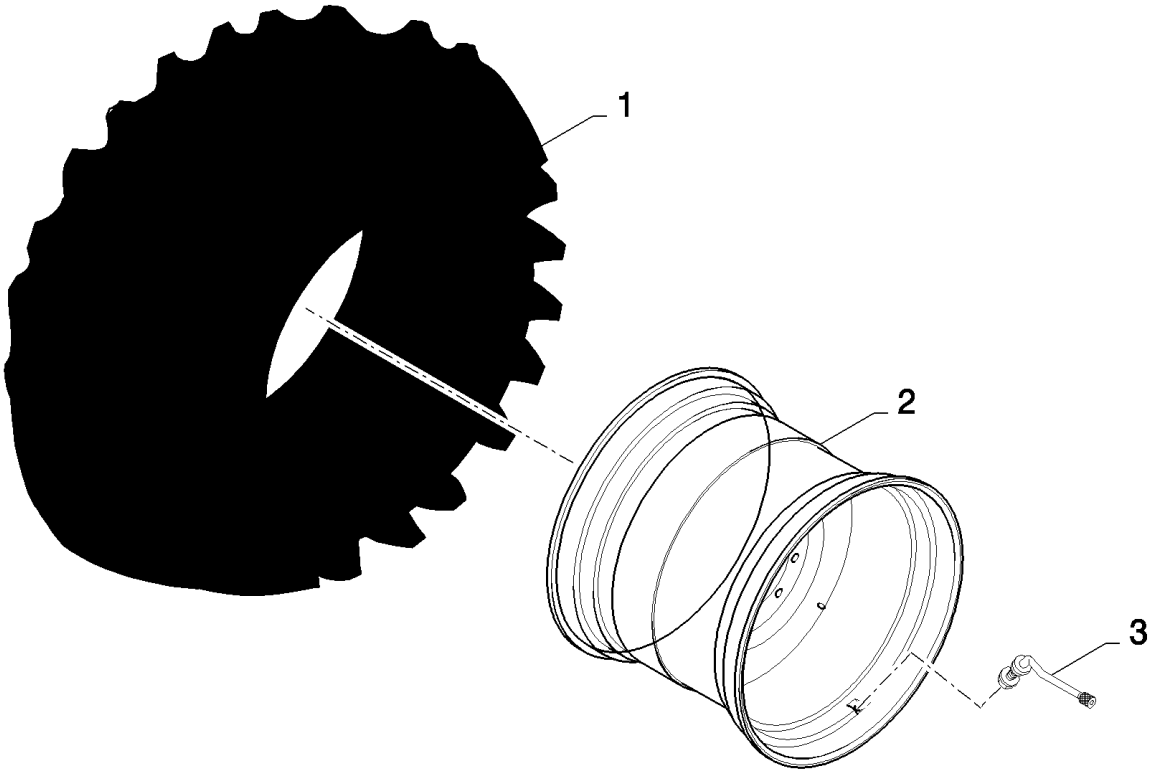

CX880 COMBINE - BASE UNIT (2/01-)

11.015(01) TRACTION WHEELS : 20.8R42-155A8-RAT23-R-1

ссылка	Номер детали	Кол-во	Описание
1	84100147	1	TYRE/TIRE,
2	84989716	1	RIM, DD 18x42
3	397236	1	VALVE STEM,

11.016(01) TRACTION WHEELS : 18.4R42-153A8-RAT23-R-1

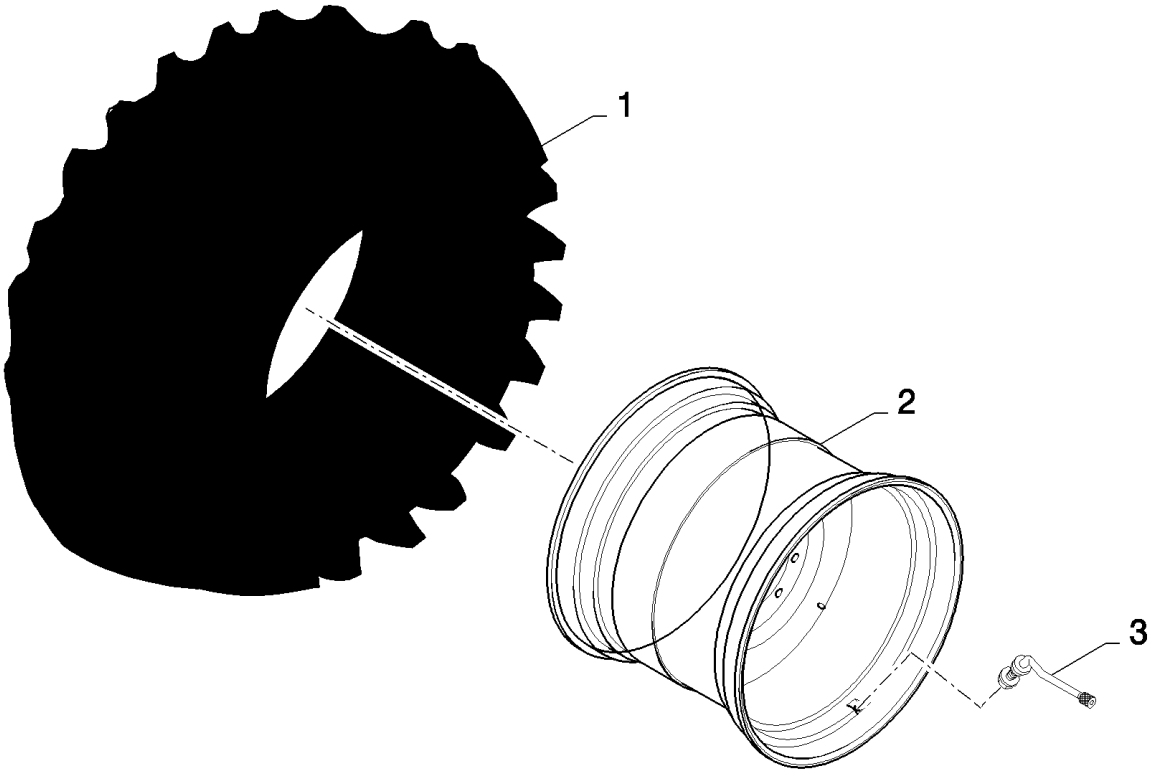

CX880 COMBINE - BASE UNIT (2/01-)

11.016(01) TRACTION WHEELS : 18.4R42-153A8-RAT23-R-1

ссылка	Номер детали	Кол-во	Описание
1	84100137	1	TYRE/TIRE,
2	84989715	1	RIM, DD16x42
3	397236	1	VALVE STEM,

11.017(01) TRACTION WHEELS : 900/60R32-176A8-DT830-R1

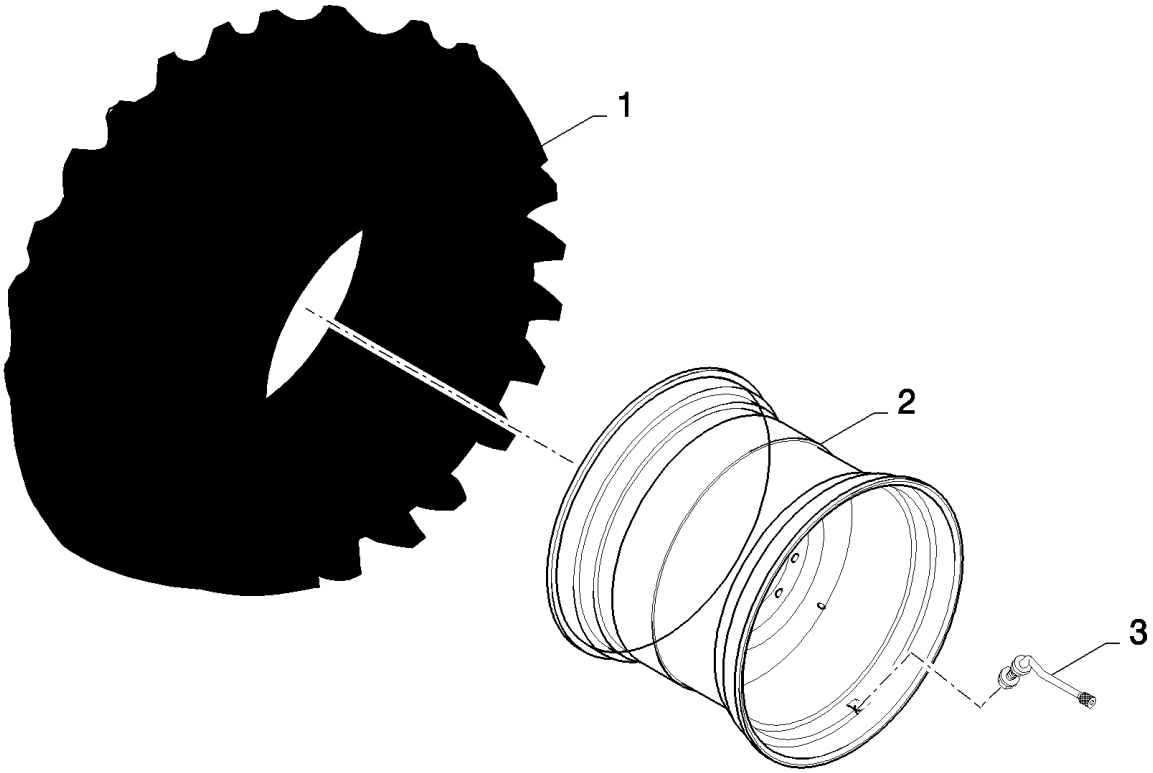

CX880 COMBINE - BASE UNIT (2/01-)

11.017(01) TRACTION WHEELS : 900/60R32-176A8-DT830-R1

ссылка	Номер детали	Кол-во	Описание
1	84100134	1	TYRE/TIRE,
2	84989713	1	RIM, DWW 27Ax32, BSN C315
2	84818900	1	RIM, , ASN D316
3	397236	1	VALVE STEM,

11.018(01) TRACTION WHEELS : 800/65R32-172A8-DT822-R-1

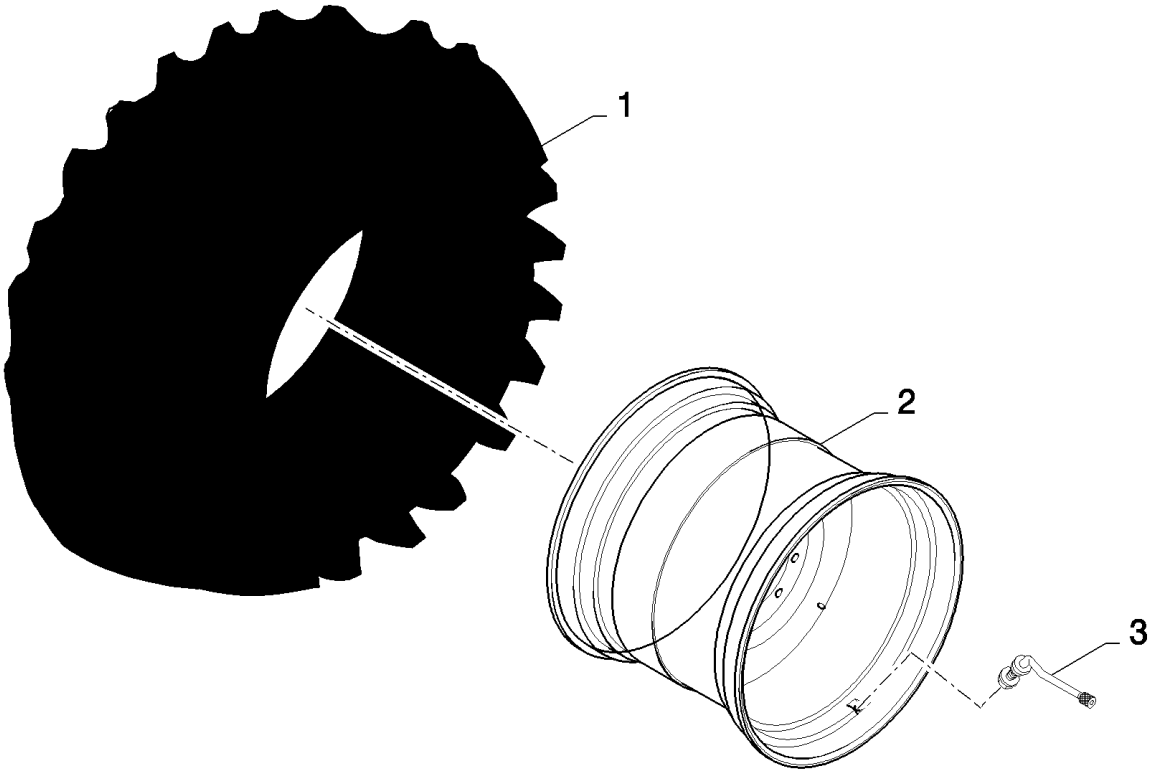

CX880 COMBINE - BASE UNIT (2/01-)

11.018(01) TRACTION WHEELS : 800/65R32-172A8-DT822-R-1

ссылка	Номер детали	Кол-во	Описание
1	84078790	1	TYRE/TIRE,
2	84989713	1	RIM, DWW 27Ax32, BSN C315
2	84818900	1	RIM, , ASN D316
3	397236	1	VALVE STEM,

11.019(01) TRACTION WHEELS : 650/75R32-172A8-DT822-R-1

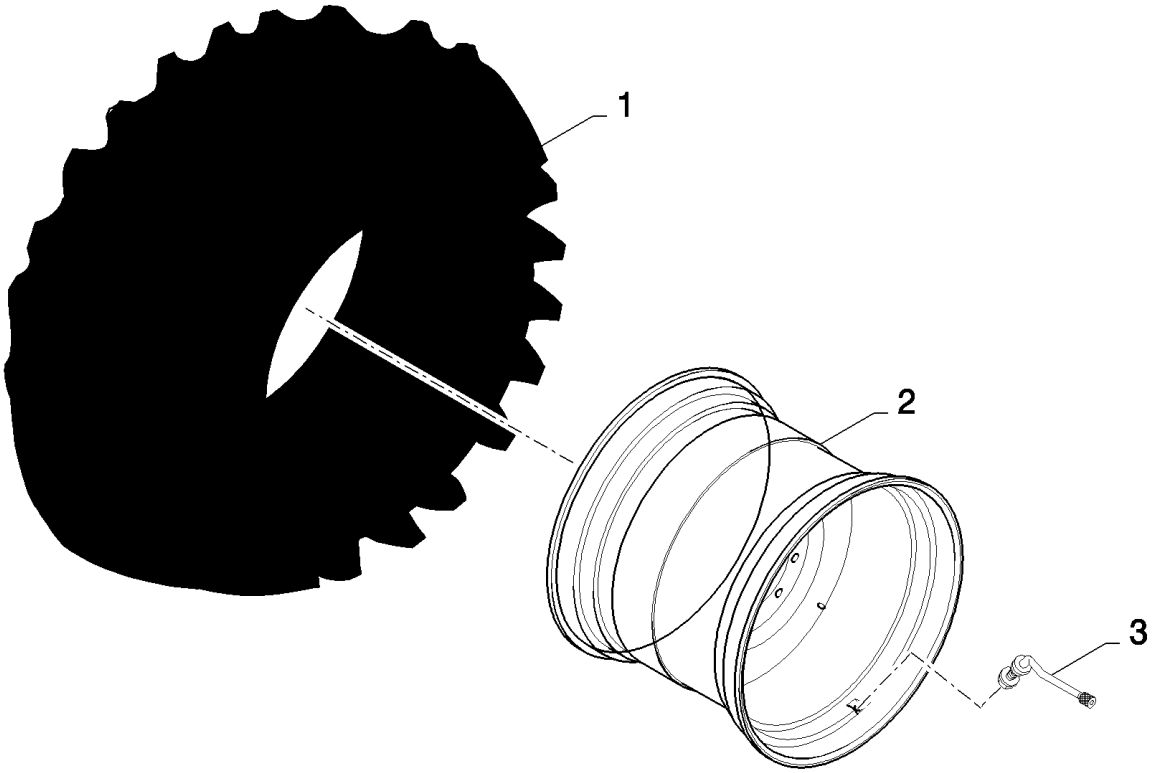

CX880 COMBINE - BASE UNIT (2/01-)

11.019(01) TRACTION WHEELS : 650/75R32-172A8-DT822-R-1

ссылка	Номер детали	Кол-во	Описание
1	84068189	1	TYRE/TIRE,
2	84989710	1	RIM, DWW 21Ax32
3	397236	1	VALVE STEM,

11.020(01) TRACTION WHEELS : 800/65R32-172A8-DT822-R1

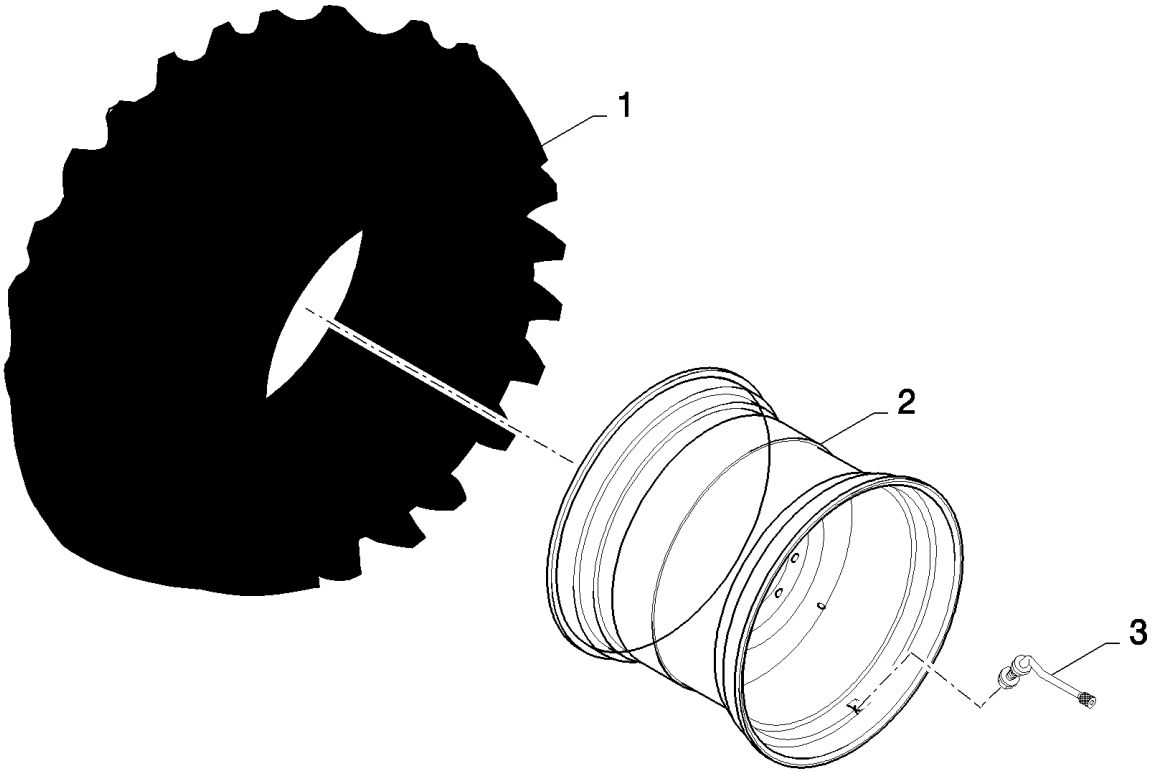

CX880 COMBINE - BASE UNIT (2/01-)

11.020(01) TRACTION WHEELS : 800/65R32-172A8-DT822-R1

ссылка	Номер детали	Кол-во	Описание
1	84078790	1	TYRE/TIRE,
2	84989712	1	RIM, DWW 27Ax32, BSN C315
2	84818898	1	RIM, (-12), BSN F316363
2	84452053	1	RIM, (8), ASN D364
3	397236	1	VALVE STEM,

11.021(01) TRACTION WHEELS : 1050/50R32-178A8-MEGA X BIB-T1

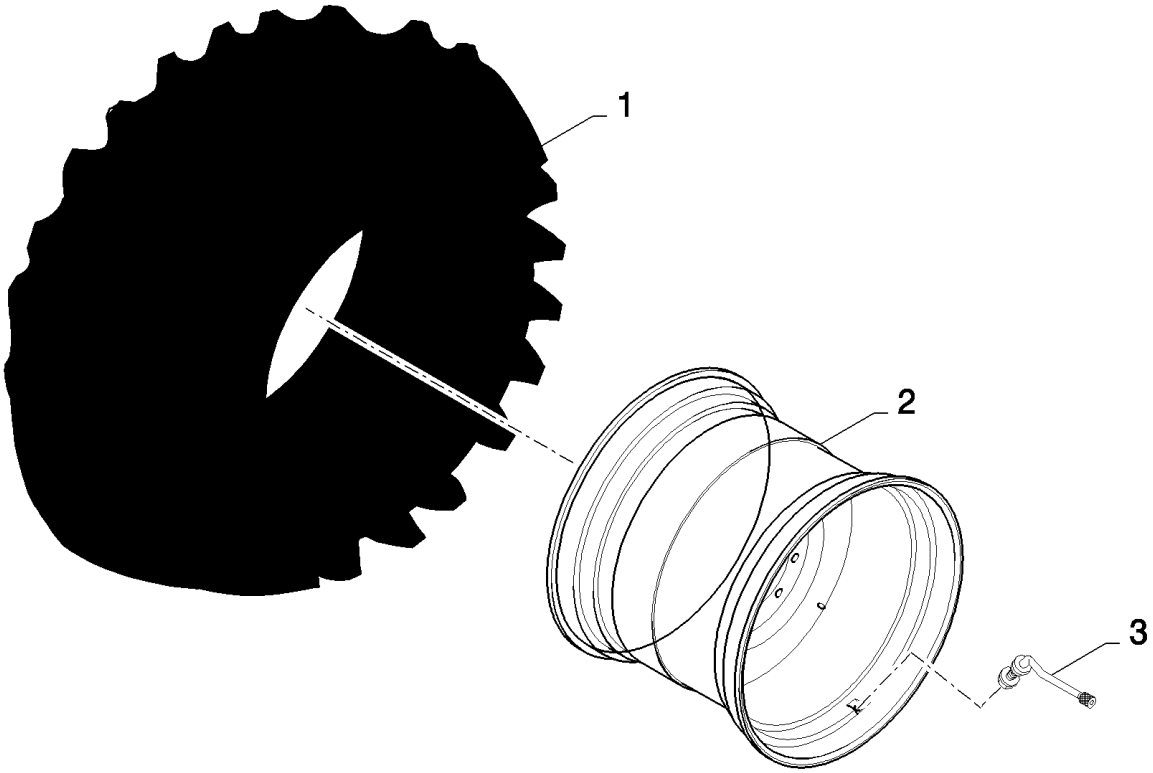

CX880 COMBINE - BASE UNIT (2/01-)

11.021(01) TRACTION WHEELS : 1050/50R32-178A8-MEGA X BIB-T1

ссылка	Номер детали	Кол-во	Описание
1	84100135	1	TYRE/TIRE,
2	84989723	1	RIM, DWW 36Ax32
3	397236	1	VALVE STEM, , BSN C423
3	84460168	1	VALVE STEM, , ASN D424

11.022(01) TRACTION WHEELS : 650/75R32-172A8-DT822-R-1

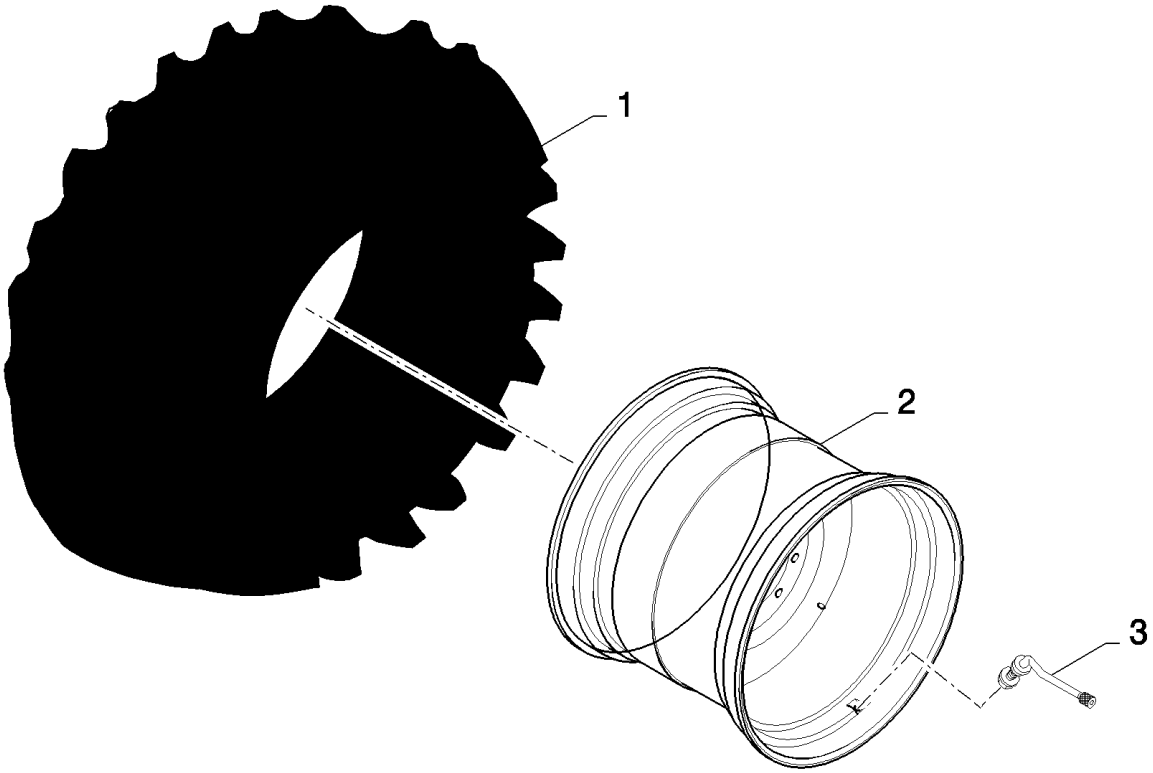

CX880 COMBINE - BASE UNIT (2/01-)

11.022(01) TRACTION WHEELS : 650/75R32-172A8-DT822-R-1

ссылка	Номер детали	Кол-во	Описание
1	84068189	1	TYRE/TIRE,
2	84989707	1	RIM, DWW 21Ax32
3	397236	1	VALVE STEM,

11.023(01) TRACTION WHEELS : 650/75R32-172A8-DT822-R1

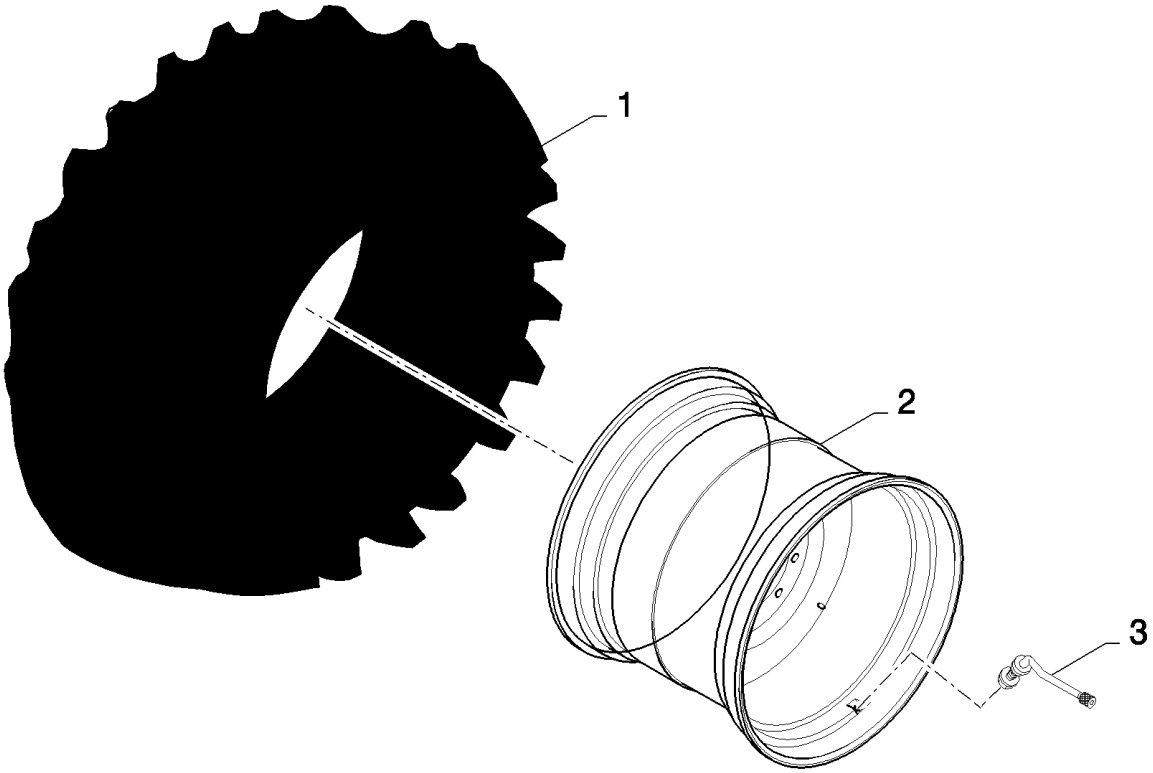

CX880 COMBINE - BASE UNIT (2/01-)

11.023(01) TRACTION WHEELS : 650/75R32-172A8-DT822-R1

ссылка	Номер детали	Кол-во	Описание
1	84068189	1	TYRE/TIRE,
2	84989708	1	RIM, DWW 21Ax32
3	397236	1	VALVE STEM,

11.024(01) TRACTION WHEELS : 620/75R34-170A8-DT820-R1

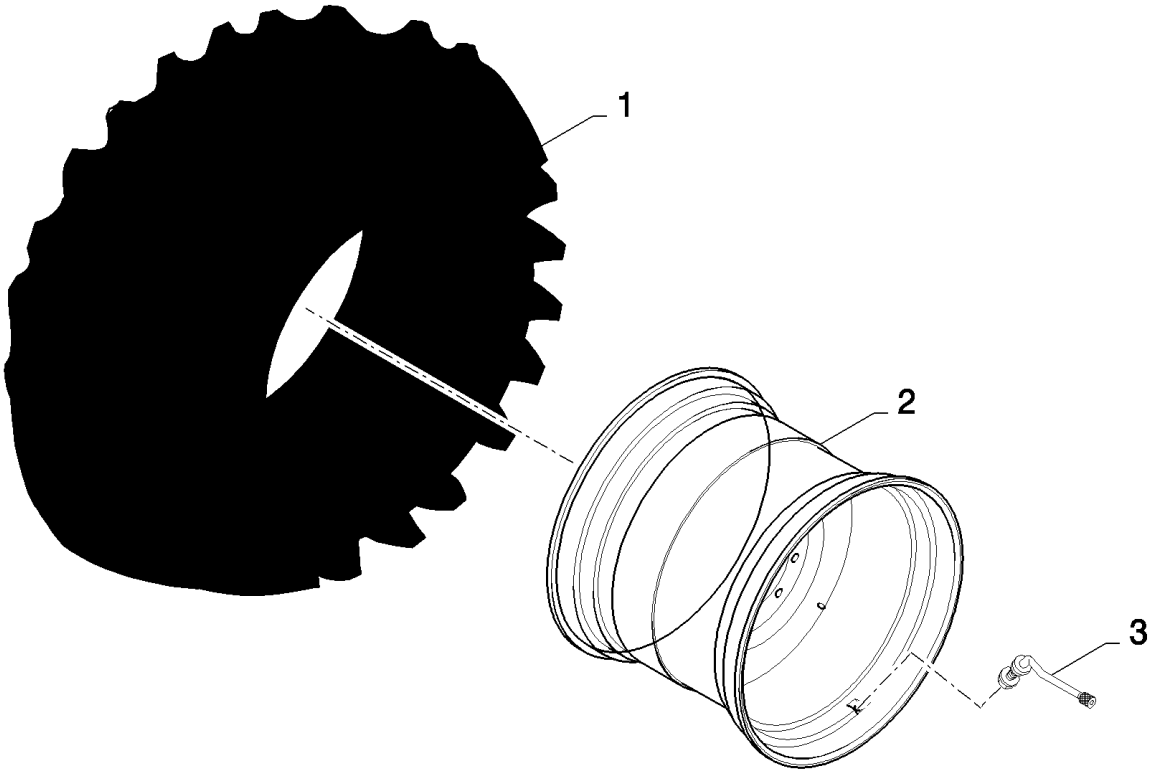

CX880 COMBINE - BASE UNIT (2/01-)

11.024(01) TRACTION WHEELS : 620/75R34-170A8-DT820-R1

ссылка	Номер детали	Кол-во	Описание
1	84036030	1	TYRE/TIRE,
1	84989691	1	RIM, DWW 21Ax34
3	397236	1	VALVE STEM,

11.025(01) TRACTION WHEELS : 900/60R32-176A8-DT830-R1

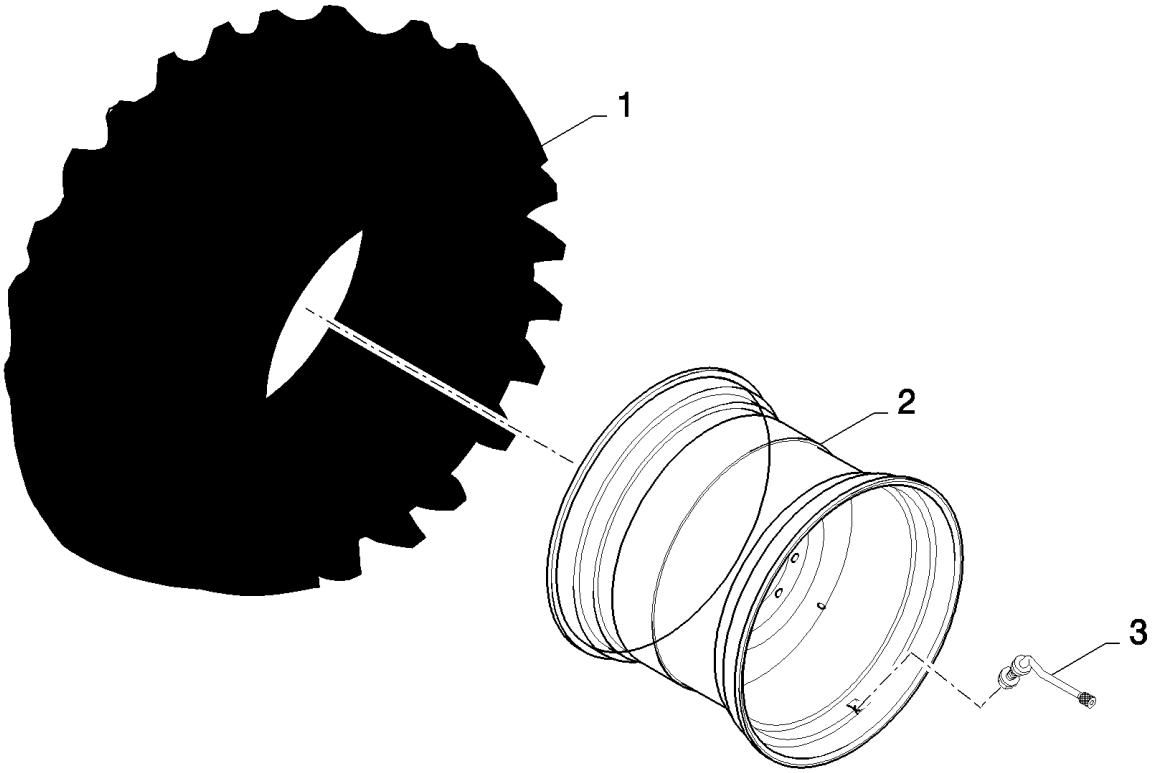

CX880 COMBINE - BASE UNIT (2/01-)

11.025(01) TRACTION WHEELS : 900/60R32-176A8-DT830-R1

ссылка	Номер детали	Кол-во	Описание
1	84100134	1	TYRE/TIRE,
2	84989712	1	RIM, DWW 27Ax32, BSN C315
2	84818898	1	RIM, , ASN D316
3	397236	1	VALVE STEM,

11.027(01) TRACTION WHEELS : 710/70R38-171A8-DT820-R-1

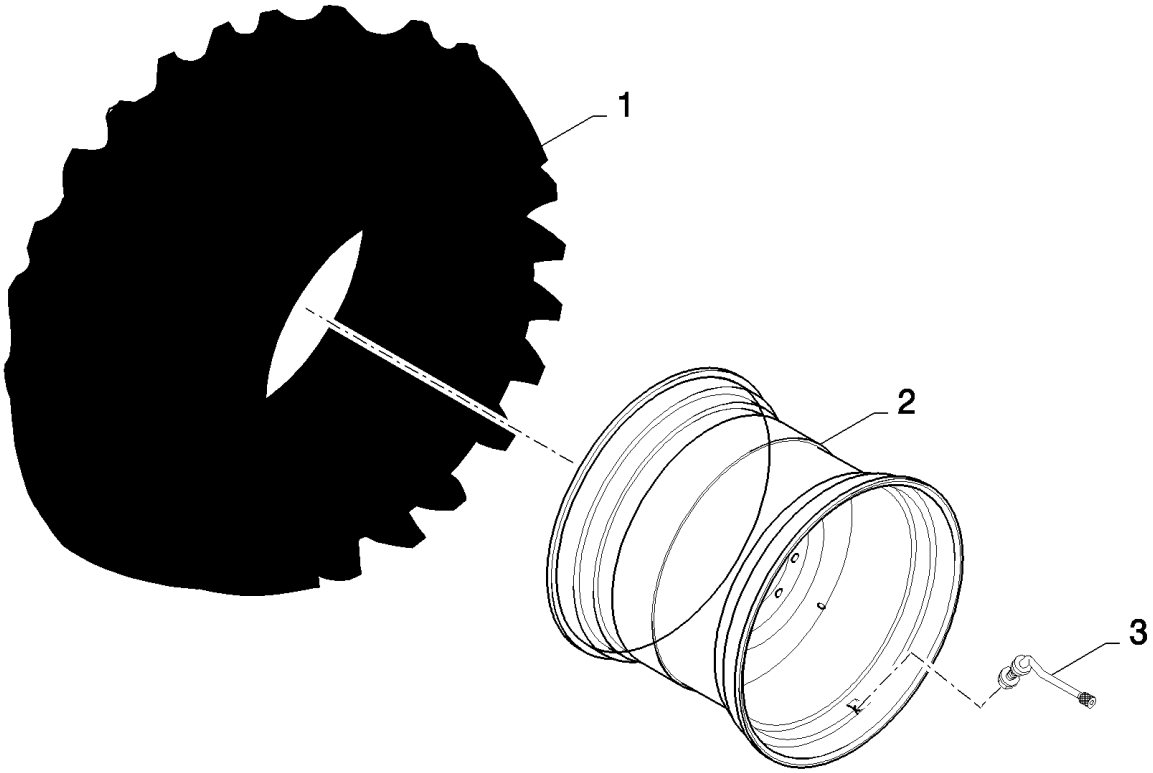

CX880 COMBINE - BASE UNIT (2/01-)

11.027(01) TRACTION WHEELS : 710/70R38-171A8-DT820-R-1

ссылка	Номер детали	Кол-во	Описание
1	84607425	1	TYRE/TIRE, , BSN C367
1	84800575	1	TYRE/TIRE, , ASN D368
2	84806127	1	RIM,
3	397236	1	VALVE STEM,

11.028(01) TRACTION WHEELS : 900/65R32-172A8-SSG-TD8-R-2

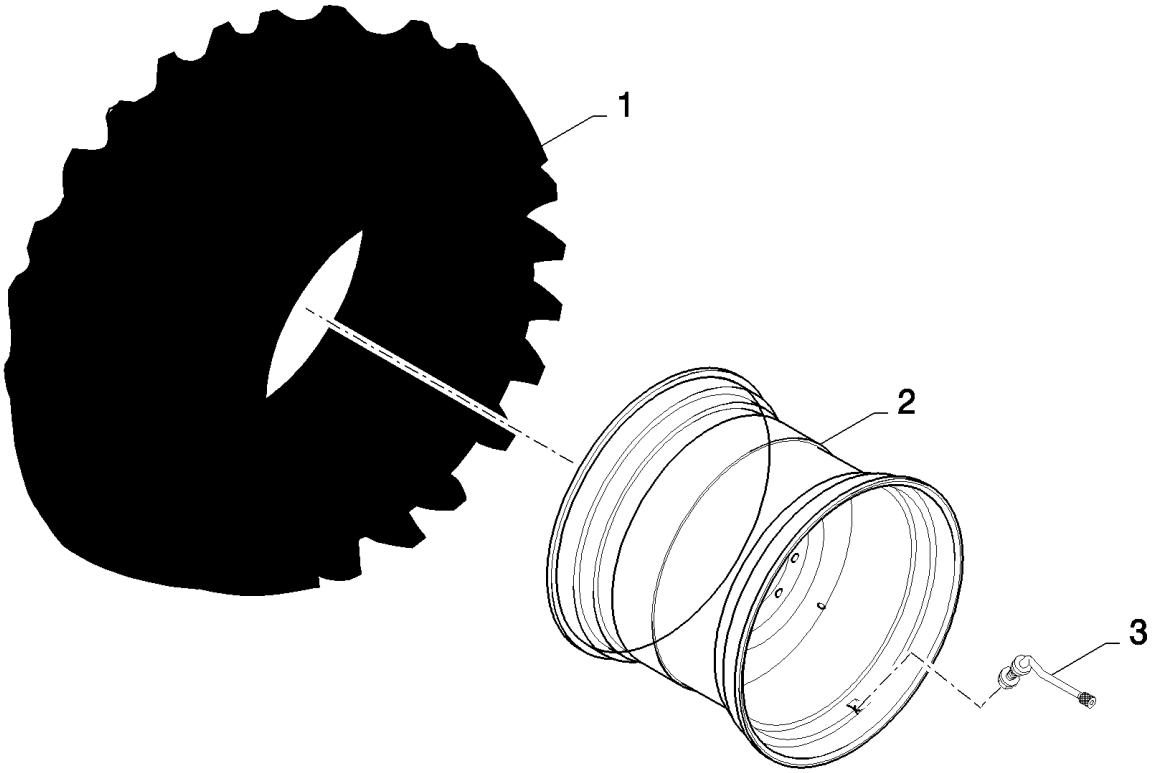

CX880 COMBINE - BASE UNIT (2/01-)

11.028(01) TRACTION WHEELS : 900/65R32-172A8-SSG-TD8-R-2

ссылка	Номер детали	Кол-во	Описание
1	84807800	1	TYRE/TIRE,
2	84989713	1	RIM, , BSN C315
2	84818900	1	RIM, , ASN D316
3	397236	1	VALVE STEM,

11.029(01) TRACTION WHEELS : 800/65R32 -172A8-XM28-R-1W

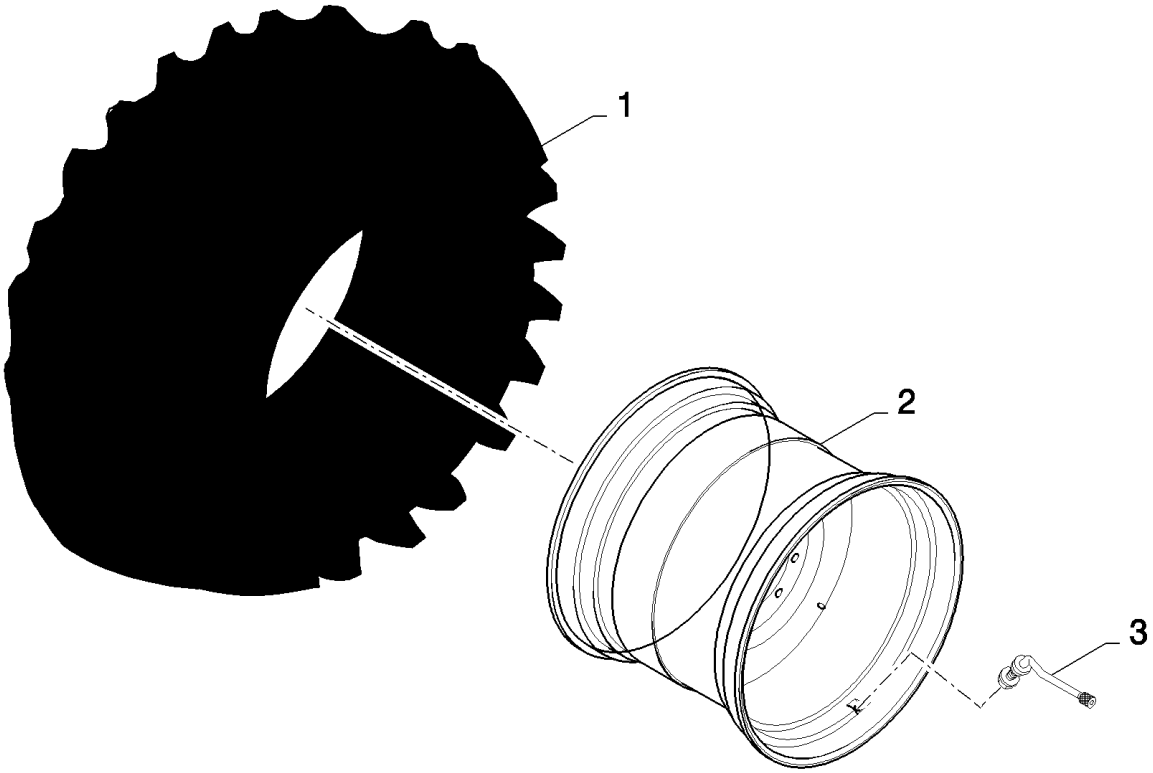

CX880 COMBINE - BASE UNIT (2/01-)

11.029(01) TRACTION WHEELS : 800/65R32 -172A8-XM28-R-1W

ссылка	Номер детали	Кол-во	Описание
1	84806566	1	TYRE/TIRE,
2	84989713	1	RIM, , BSN C315
2	84818900	1	RIM, , ASN D316
3	397236	1	VALVE STEM, , BSN C423
3	84460168	1	VALVE STEM, , ASN D424

11.030(01) TRACTION WHEELS : 420/80R46 DUAL

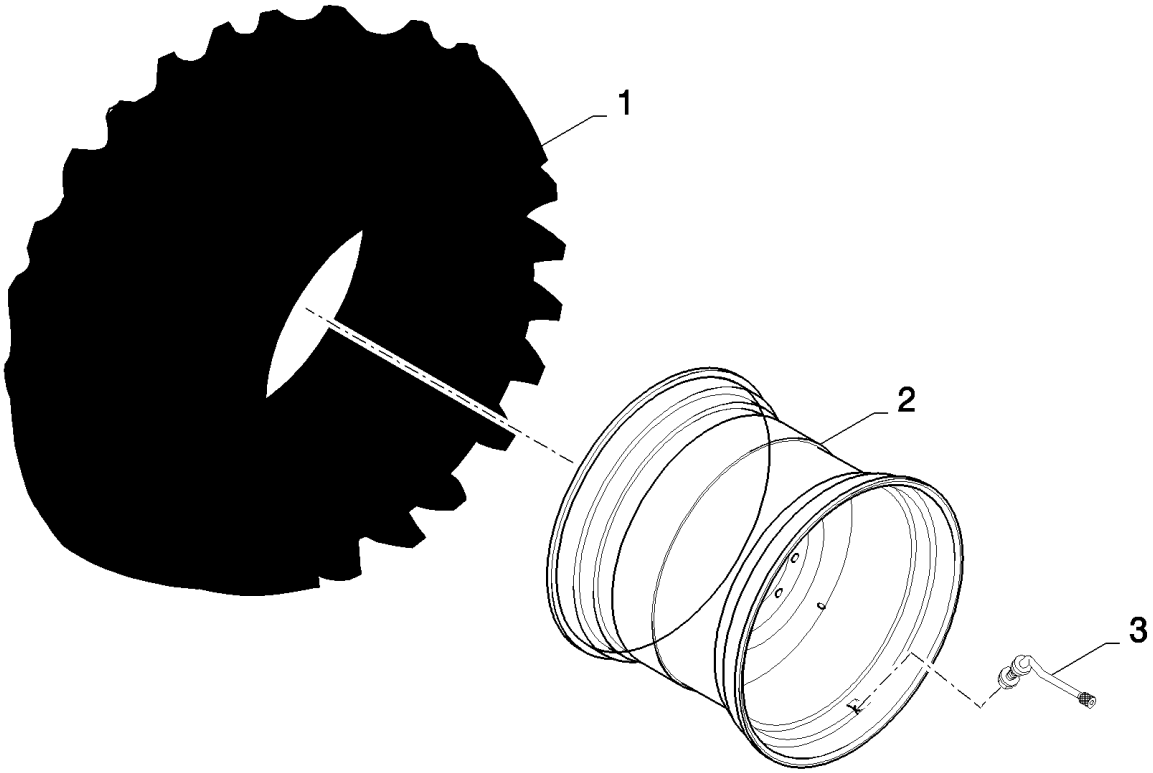

CX880 COMBINE - BASE UNIT (2/01-)

11.030(01) TRACTION WHEELS : 420/80R46 DUAL

ссылка	Номер детали	Кол-во	Описание
1	87108397	1	TYRE/TIRE,
2	86996691	1	RIM,
3	395448	1	VALVE STEM,

11.031(01) TRACTION WHEELS : 18.4R42 153A8 DUAL

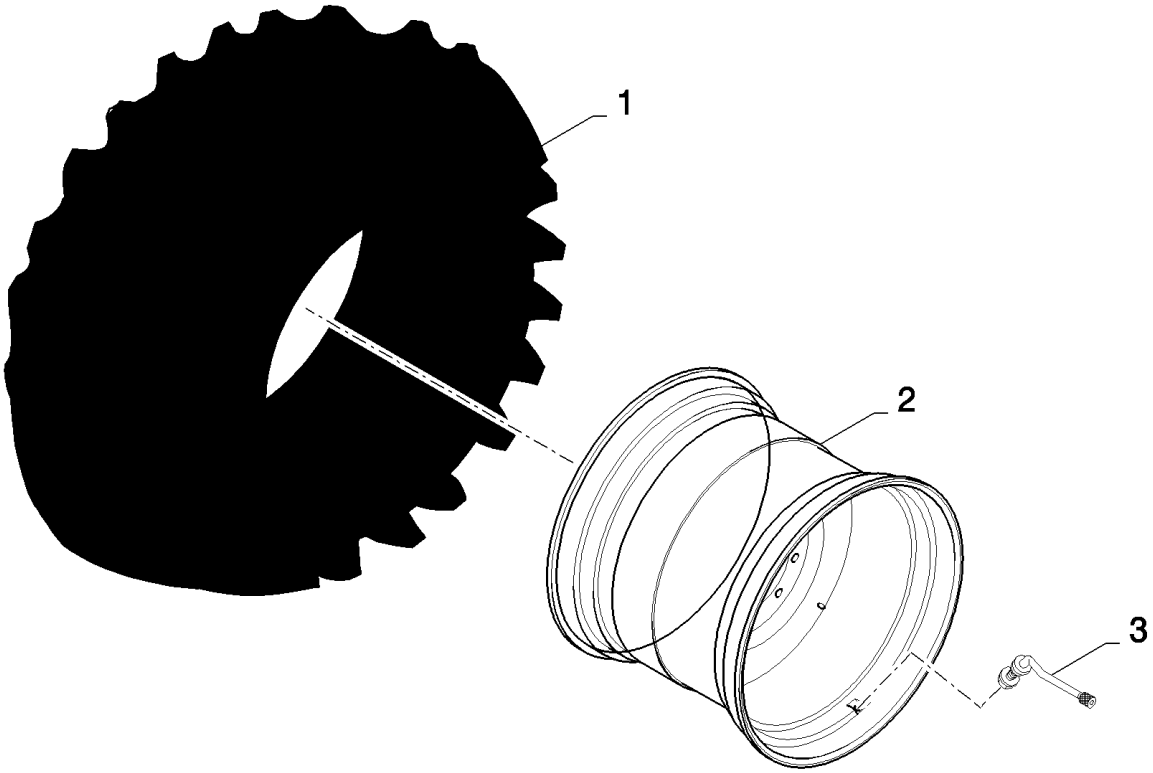

CX880 COMBINE - BASE UNIT (2/01-)

11.031(01) TRACTION WHEELS : 18.4R42 153A8 DUAL

ссылка	Номер детали	Кол-во	Описание
1	87282318	1	TYRE/TIRE,
2	87109631	1	RIM,
3	395448	1	VALVE STEM,

11.032(01) TRACTION WHEELS : 20.8R42 155A8 R1W

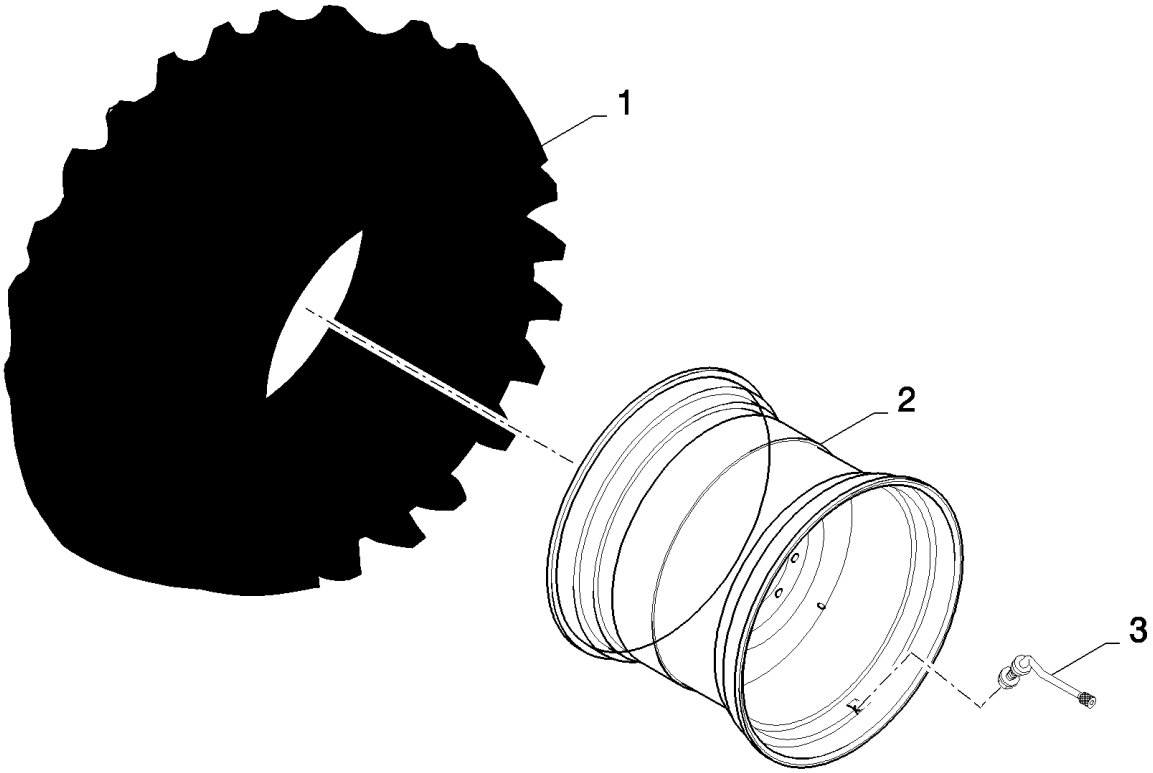

CX880 COMBINE - BASE UNIT (2/01-)

11.032(01) TRACTION WHEELS : 20.8R42 155A8 R1W

ссылка	Номер детали	Кол-во	Описание
1	87282319	1	TYRE/TIRE,
2	87109643	1	RIM,
3	395448	1	VALVE STEM,

11.033(01) TRACTION WHEELS : 900/60R32 - 176A8 MXB(-115)

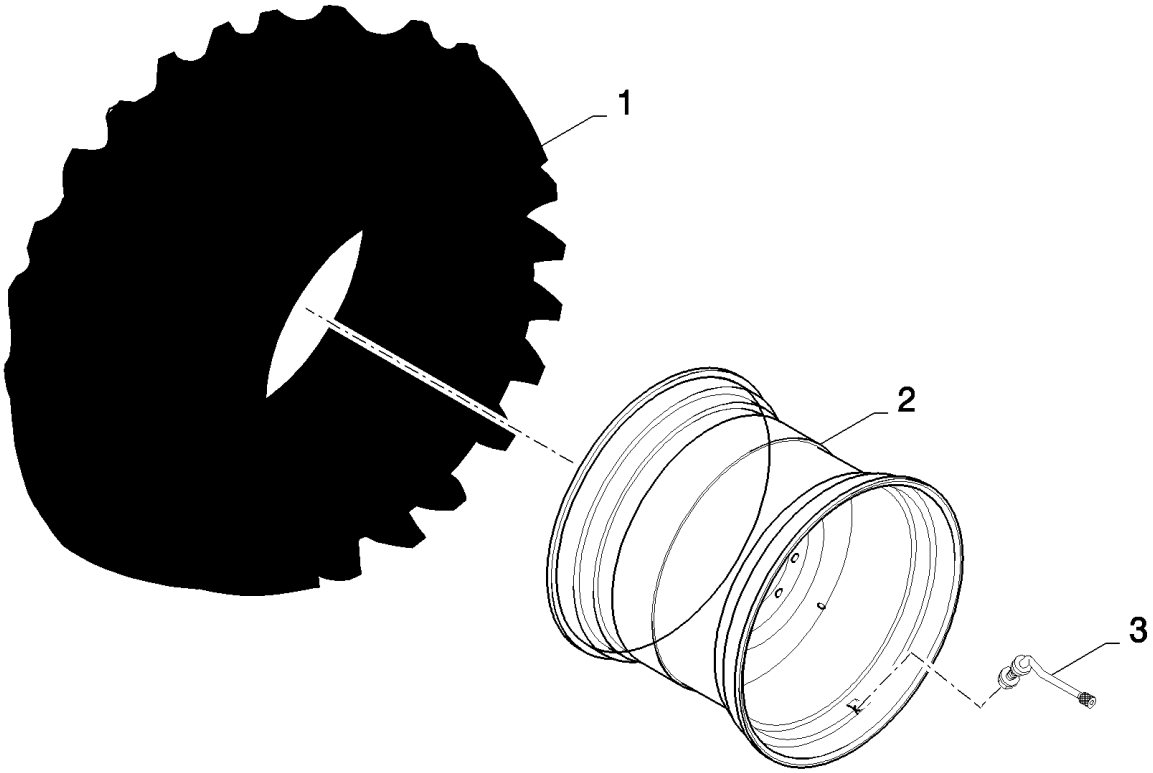

CX880 COMBINE - BASE UNIT (2/01-)

11.033(01) TRACTION WHEELS : 900/60R32 - 176A8 MXB(-115)

ссылка	Номер детали	Кол-во	Описание
1	84449686	1	TYRE/TIRE,
2	84818900	1	RIM,
3	397236	1	VALVE STEM, , BSN C423
3	84460168	1	VALVE STEM, , ASN D424

11.034(01) TRACTION WHEELS : 900/60R32 - 176A8 MXB(-12), (-23)

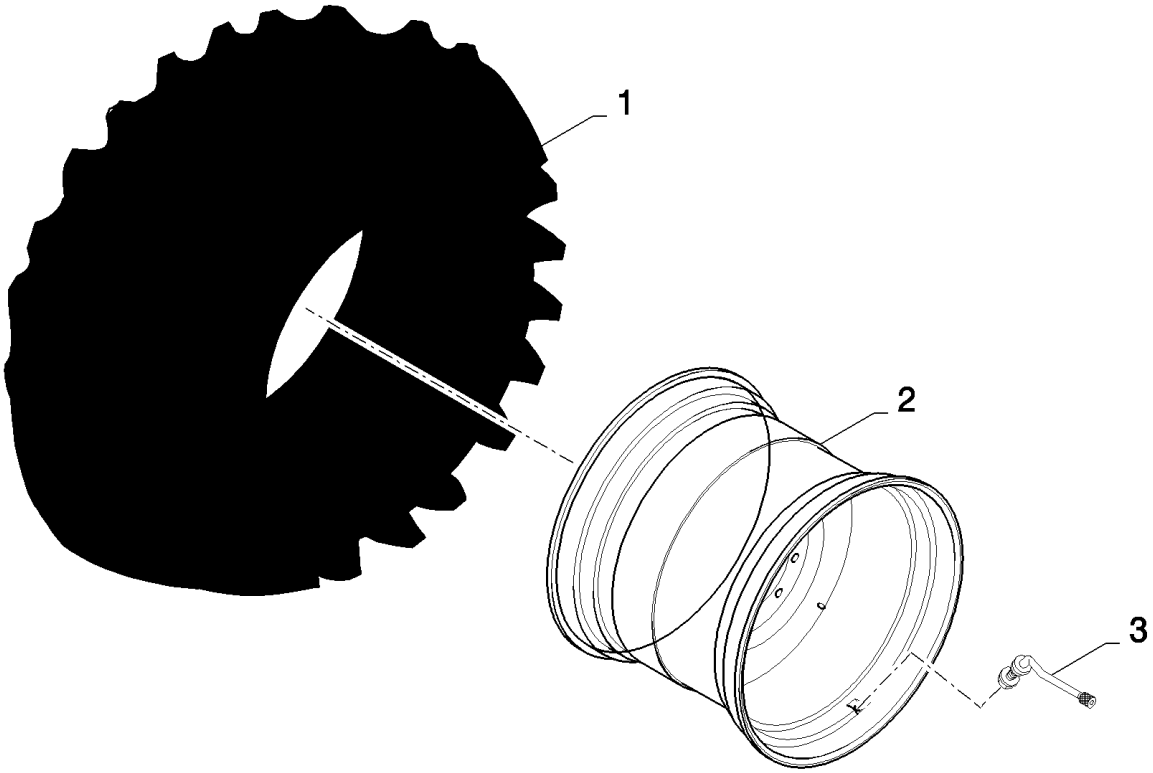

CX880 COMBINE - BASE UNIT (2/01-)

11.034(01) TRACTION WHEELS : 900/60R32 - 176A8 MXB(-12), (-23)

ссылка	Номер детали	Кол-во	Описание
1	84449686	1	TYRE/TIRE,
2	84818898	1	RIM, (-12), BSN C363
2	84452053	1	RIM, (-23), ASN D364
3	397236	1	VALVE STEM, , BSN C423
3	84460168	1	VALVE STEM, , ASN D424

11.036(01) TRACTION WHEELS : 650/75R32 - 172A8 (60)

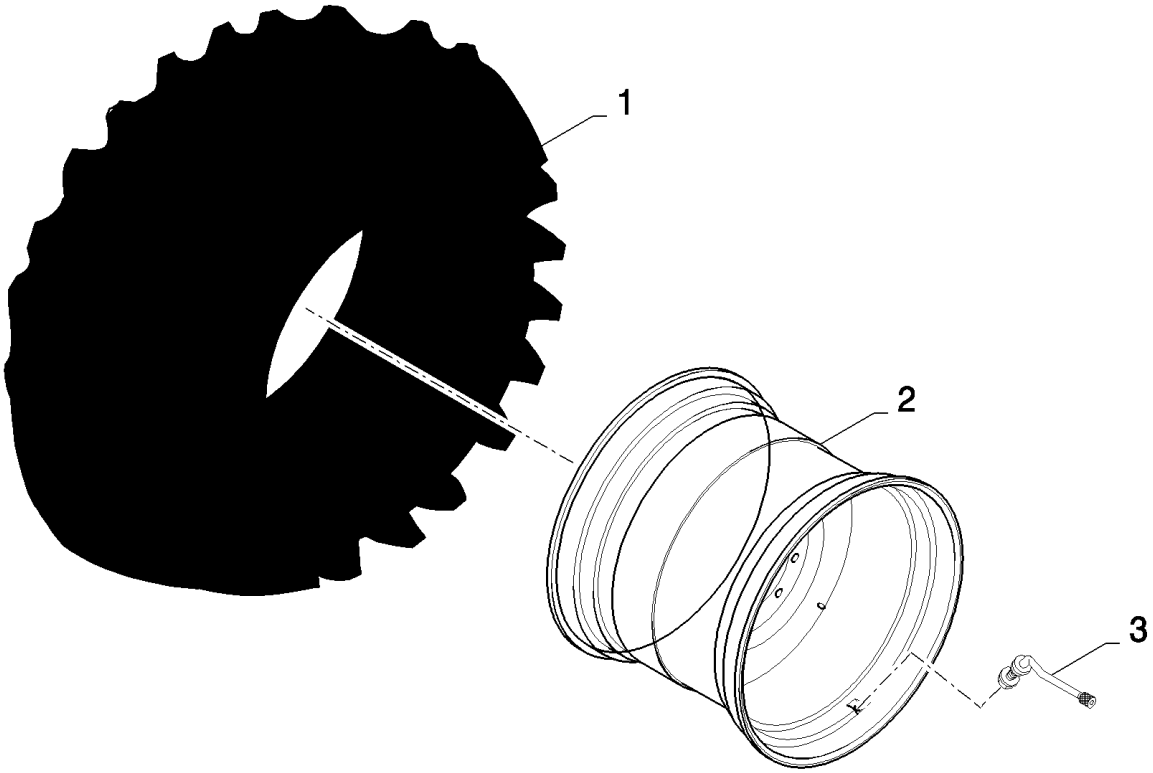

CX880 COMBINE - BASE UNIT (2/01-)

11.036(01) TRACTION WHEELS : 650/75R32 - 172A8 (60)

ссылка	Номер детали	Кол-во	Описание
1	84068189	1	TYRE/TIRE,
2	84457058	1	RIM,
3	397236	1	VALVE STEM,

11.038(01) TRACTION WHEELS : 710/75R34 - 178A8 (88)

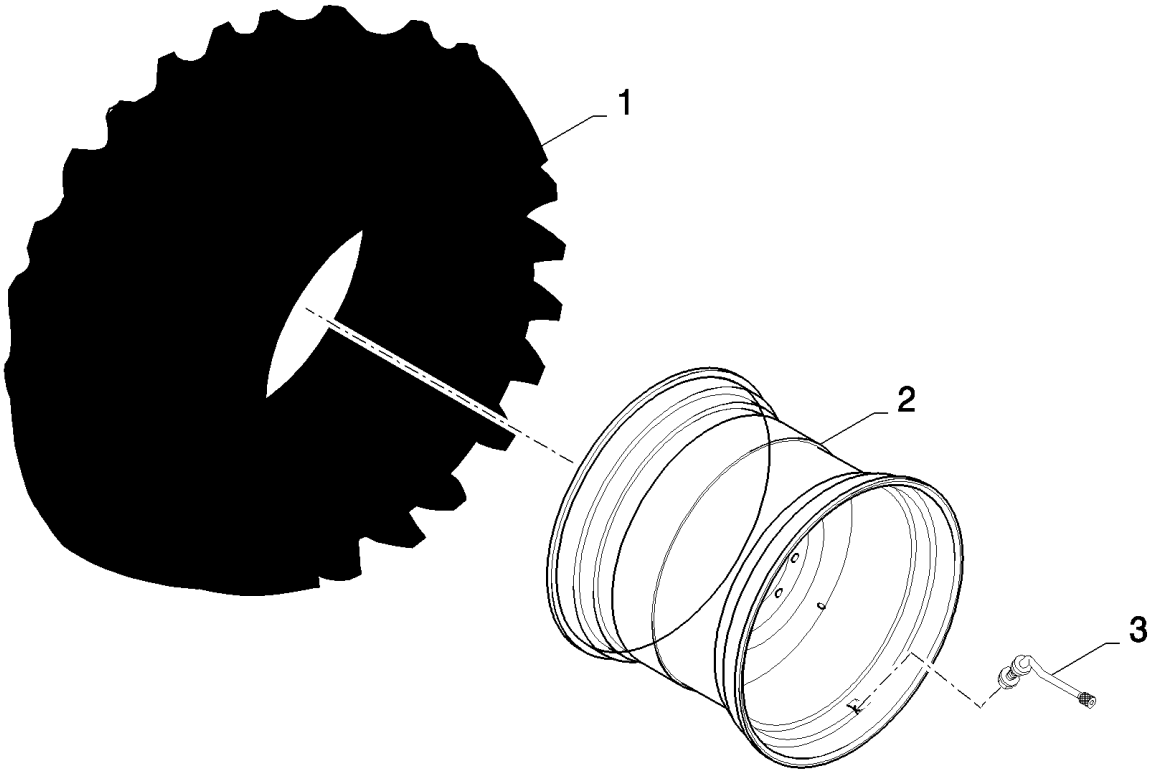

CX880 COMBINE - BASE UNIT (2/01-)

11.038(01) TRACTION WHEELS : 710/75R34 - 178A8 (88)

ссылка	Номер детали	Кол-во	Описание
1	84446099	1	TYRE/TIRE,
2	84457050	1	RIM,
3	397236	1	VALVE STEM, , BSN C423
3	84460168	1	VALVE STEM, , ASN D424

11.050(01) STEERING WHEELS : 460/70R24-150A8-IT520-R-1

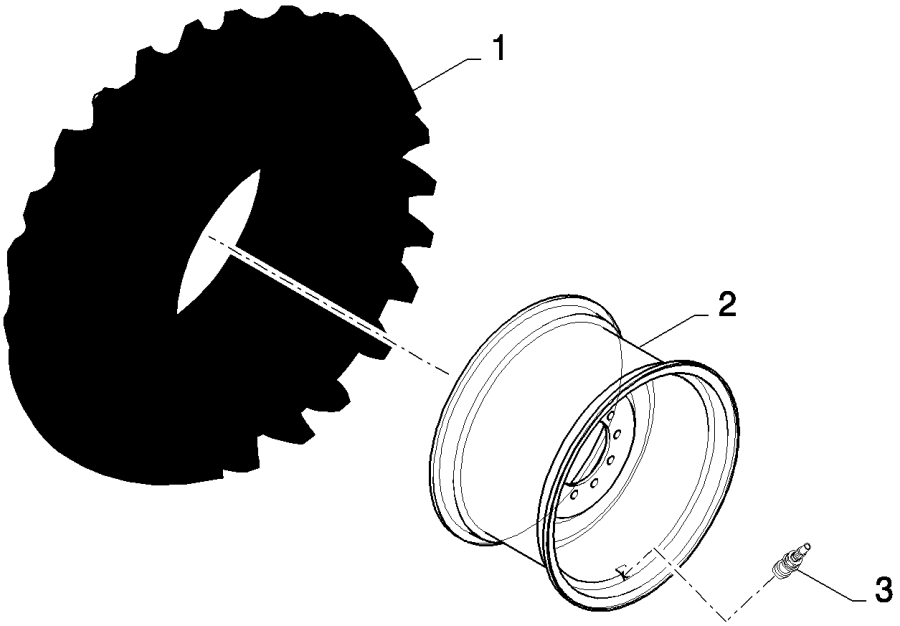

CX880 COMBINE - BASE UNIT (2/01-)

11.050(01) STEERING WHEELS : 460/70R24-150A8-IT520-R-1

ссылка	Номер детали	Кол-во	Описание
1	9514625	1	TYRE/TIRE, , BSN C387
1	84801075	1	TYRE/TIRE, , ASN D388
2	84989725	1	RIM, W15Lx24
3	395448	1	VALVE STEM,

11.051(01) STEERING WHEELS : 23.1-26-14PR-SSG-TD8-R-2

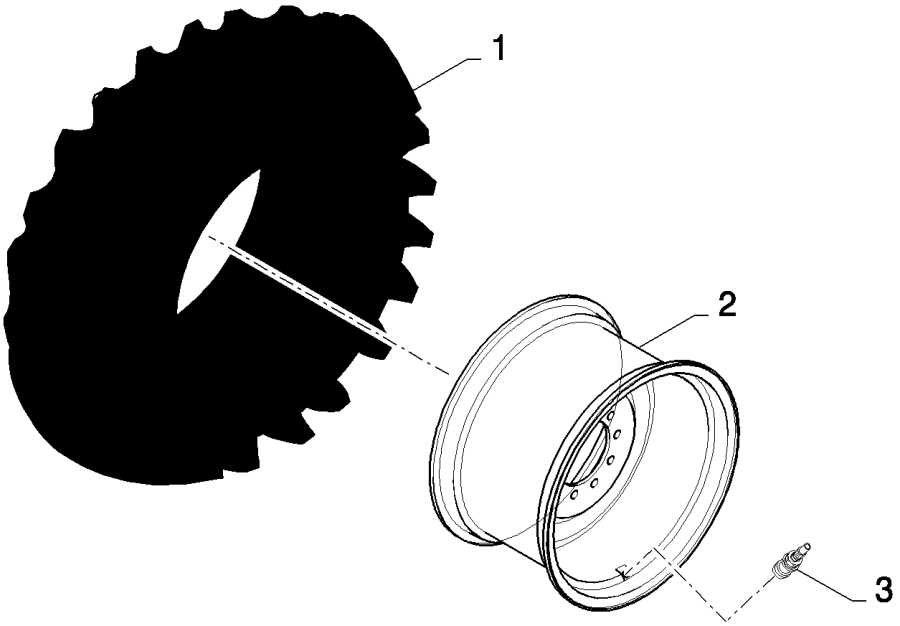

CX880 COMBINE - BASE UNIT (2/01-)

11.051(01) STEERING WHEELS : 23.1-26-14PR-SSG-TD8-R-2

ссылка	Номер детали	Кол-во	Описание
1	332276	1	TYRE/TIRE,
2	84989720	1	RIM, DW 20Ax26
3	395448	1	VALVE STEM,

11.052(01) STEERING WHEELS : 620/75R26-166A8-DT820-R-1

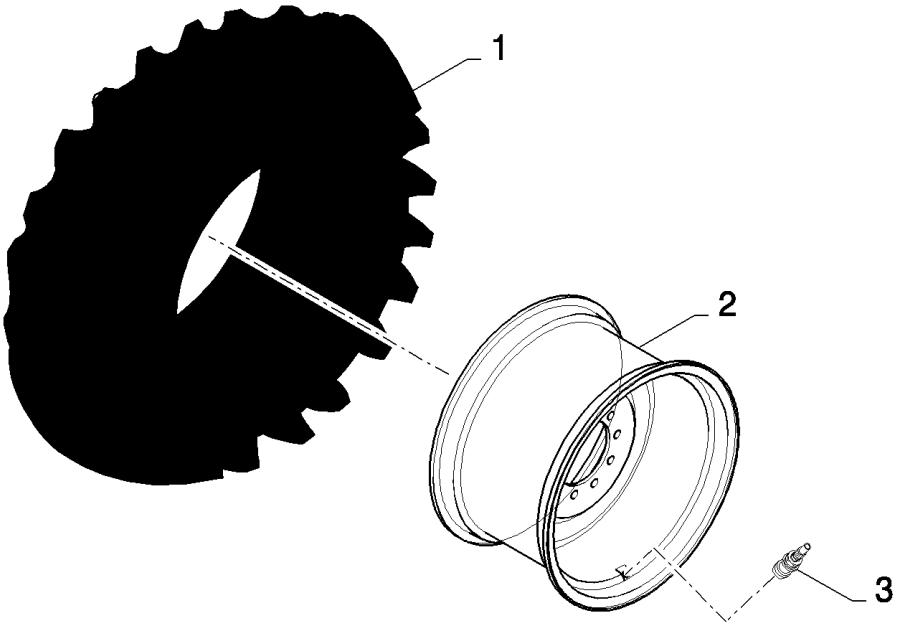

CX880 COMBINE - BASE UNIT (2/01-)

11.052(01) STEERING WHEELS : 620/75R26-166A8-DT820-R-1

ссылка	Номер детали	Кол-во	Описание
1	9515483	1	TYRE/TIRE, , BSN C367
1	84800605	1	TYRE/TIRE, , ASN D368
2	84989720	1	RIM, DW 20Ax26 (-80), BSN C363
2	84449676	1	RIM, (-60), ASN D364
3	395448	1	VALVE STEM,

11.053(01) STEERING WHEELS : 480/70R30-147D-DT810-R-1, 480/70R30-150A8

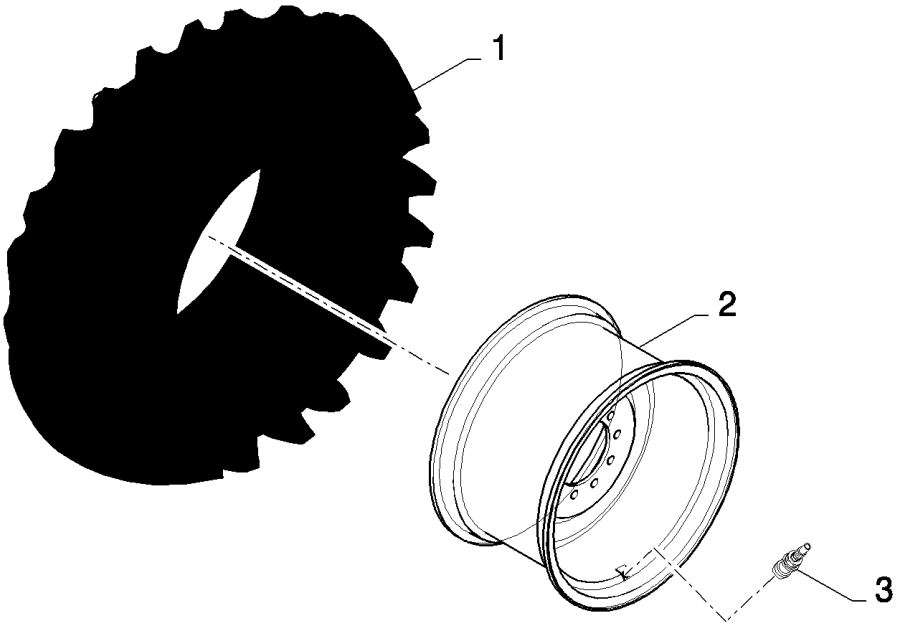

CX880 COMBINE - BASE UNIT (2/01-)

11.053(01) STEERING WHEELS : 480/70R30-147D-DT810-R-1, 480/70R30-150A8

ссылка	Номер детали	Кол-во	Описание
1	84100138	1	TYRE/TIRE, , BSN C281
1	84817585	1	TYRE/TIRE, , ASN D282
2	84989718	1	RIM, DWW 16Lx30
3	395448	1	VALVE STEM,

11.054(01) STEERING WHEELS : 540/65R30-150A8-DT820-R-1

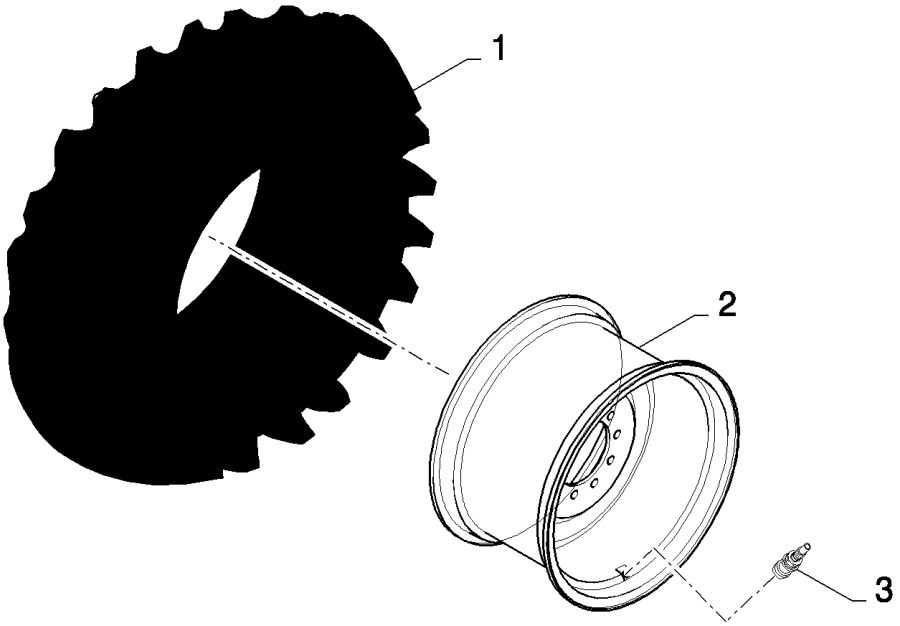

CX880 COMBINE - BASE UNIT (2/01-)

11.054(01) STEERING WHEELS : 540/65R30-150A8-DT820-R-1

ссылка	Номер детали	Кол-во	Описание
1	84989792	1	TYRE/TIRE,
2	84989718	1	RIM, DWW 16Lx30
3	395448	1	VALVE STEM,

11.055(01) STEERING WHEELS : 28LR26-157A8-STR-R-1W

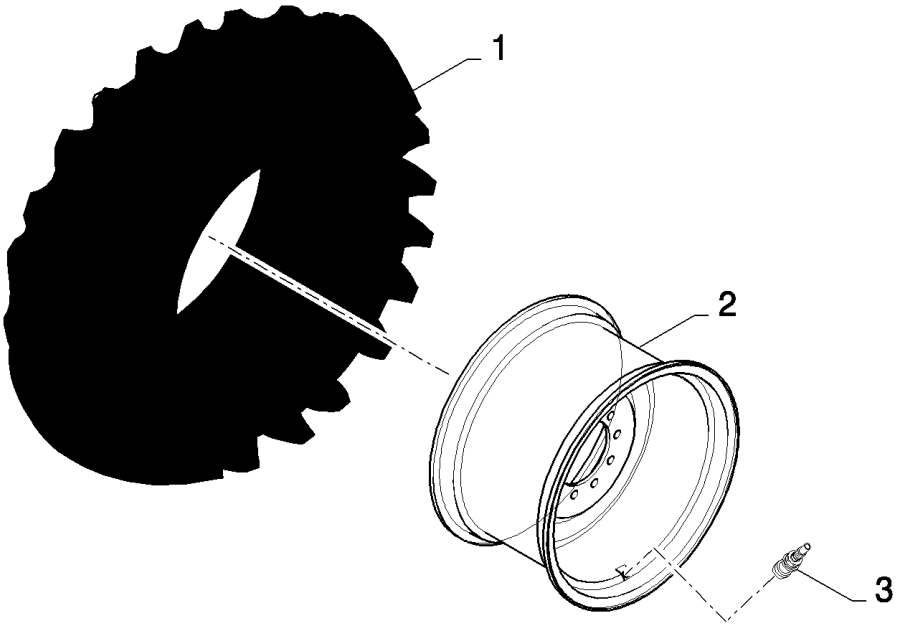

CX880 COMBINE - BASE UNIT (2/01-)

11.055(01) STEERING WHEELS : 28LR26-157A8-STR-R-1W

ссылка	Номер детали	Кол-во	Описание
1	84100149	1	TYRE/TIRE,
2	84989721	1	RIM, DW 25Ax26
3	395448	1	VALVE STEM,

11.056(01) STEERING WHEELS : 18.4R30-155A8

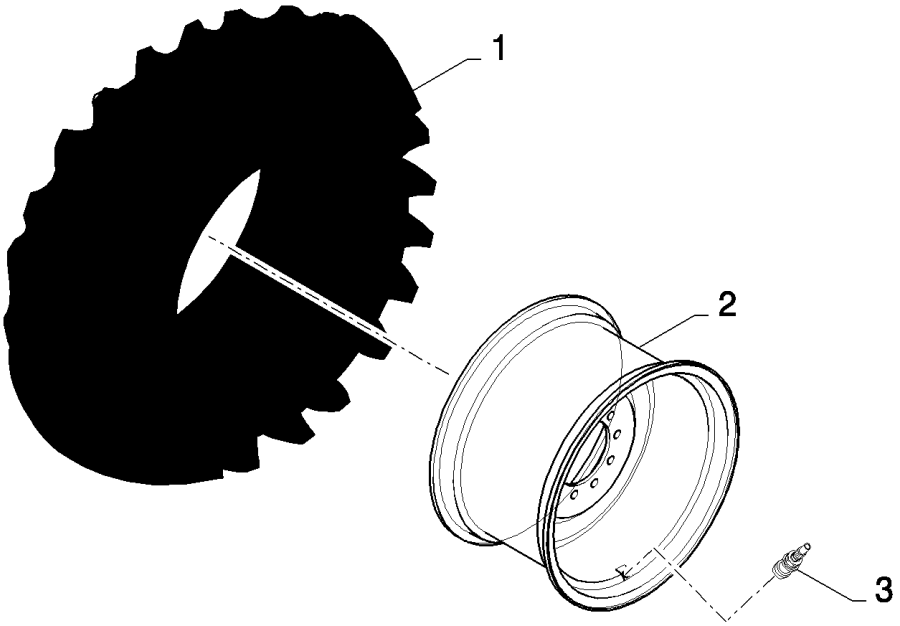

CX880 COMBINE - BASE UNIT (2/01-)

11.056(01) STEERING WHEELS : 18.4R30-155A8

ссылка	Номер детали	Кол-во	Описание
1	84100057	1	TYRE/TIRE, , BSN C281
1	84443888	1	TYRE/TIRE, , ASN D282
2	84989895	1	RIM, DWW 16Lx30
3	395448	1	VALVE STEM,

11.057(01) STEERING WHEELS : 600/65R28-147A8, 600/65R28-154A8

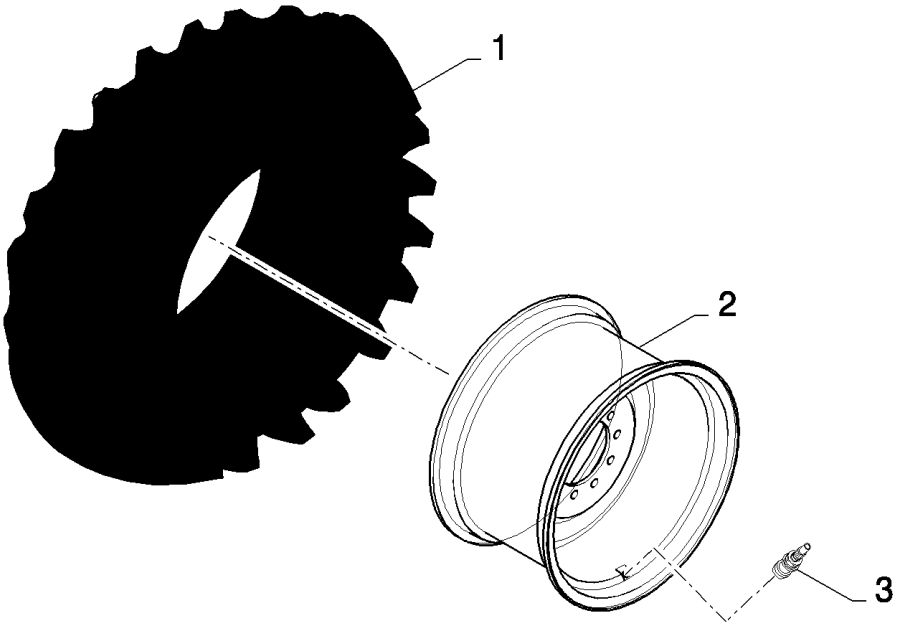

CX880 COMBINE - BASE UNIT (2/01-)

11.057(01) STEERING WHEELS : 600/65R28-147A8, 600/65R28-154A8

ссылка	Номер детали	Кол-во	Описание
1	84989797	1	TYRE/TIRE, , BSN C281
1	84443887	1	TYRE/TIRE, , ASN D282
2	84989915	1	RIM, DW 18Ax28 (-65), BSN C363
2	84449665	1	RIM, (-45), ASN D364
3	395448	1	VALVE STEM,

11.058(01) STEERING WHEELS : 540/65R24-146A8

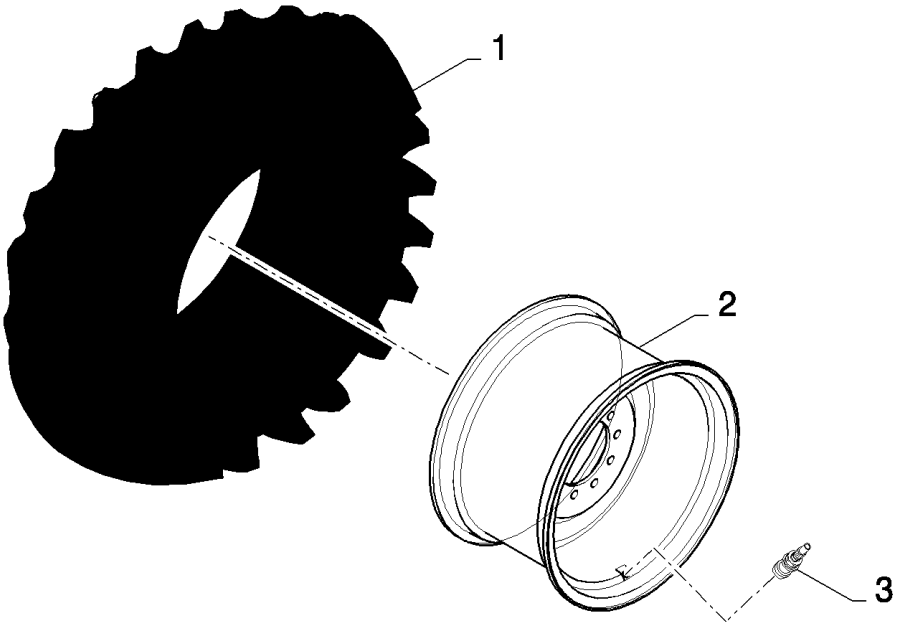

CX880 COMBINE - BASE UNIT (2/01-)

11.058(01) STEERING WHEELS : 540/65R24-146A8

ссылка	Номер детали	Кол-во	Описание
1	84026457	1	TYRE/TIRE, , BSN C281
1	84806567	1	TYRE/TIRE, , ASN D282
2	84989894	1	RIM, , BSN C407
2	84455745	1	RIM, , ASN D408
3	395448	1	VALVE STEM,

11.059(01) STEERING WHEELS : 20.8X34-14PR-R-1-DT2-TIC

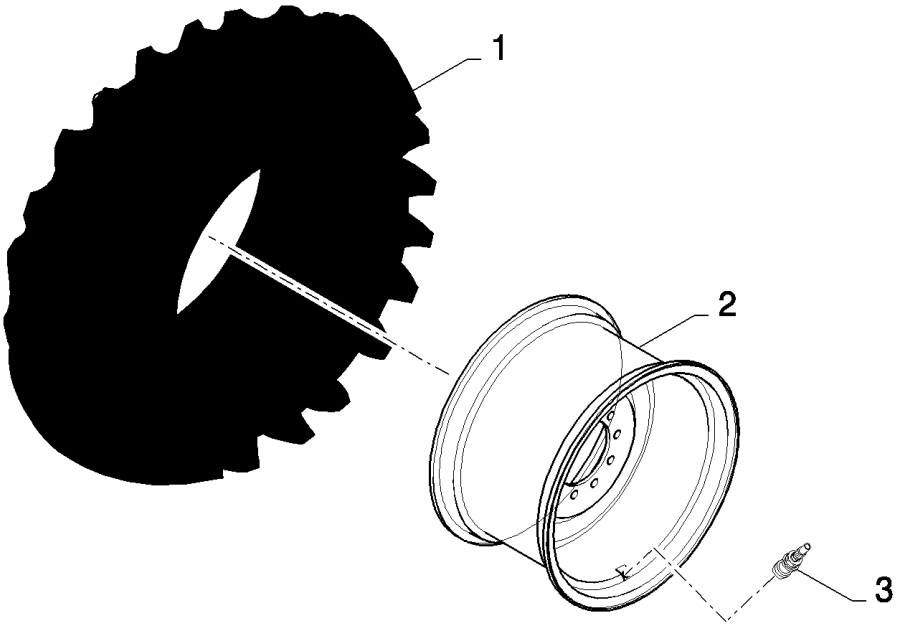

CX880 COMBINE - BASE UNIT (2/01-)

11.059(01) STEERING WHEELS : 20.8X34-14PR-R-1-DT2-TIC

ссылка	Номер детали	Кол-во	Описание
1	84023964	1	TYRE/TIRE,
2	84989722	1	RIM, DWW 18Lx34
3	395448	1	VALVE STEM,

11.060(01) STEERING WHEELS : 14.9-24 IND-16PR-ISG-R-4

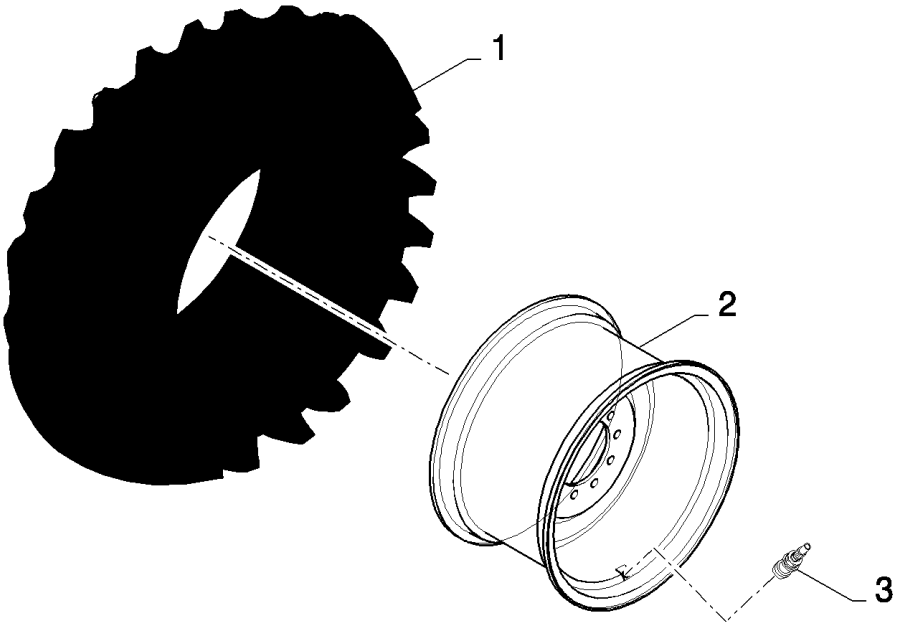

CX880 COMBINE - BASE UNIT (2/01-)

11.060(01) STEERING WHEELS : 14.9-24 IND-16PR-ISG-R-4

ссылка	Номер детали	Кол-во	Описание
1	84058908	1	TYRE/TIRE, , BSN C495
1	87328726	1	TYRE/TIRE, , ASN D496
2	84989717	1	RIM, W11x24
3	395448	1	VALVE STEM,

11.061(01) STEERING WHEELS : 18.4-30IND-14PR-SGL-R-4

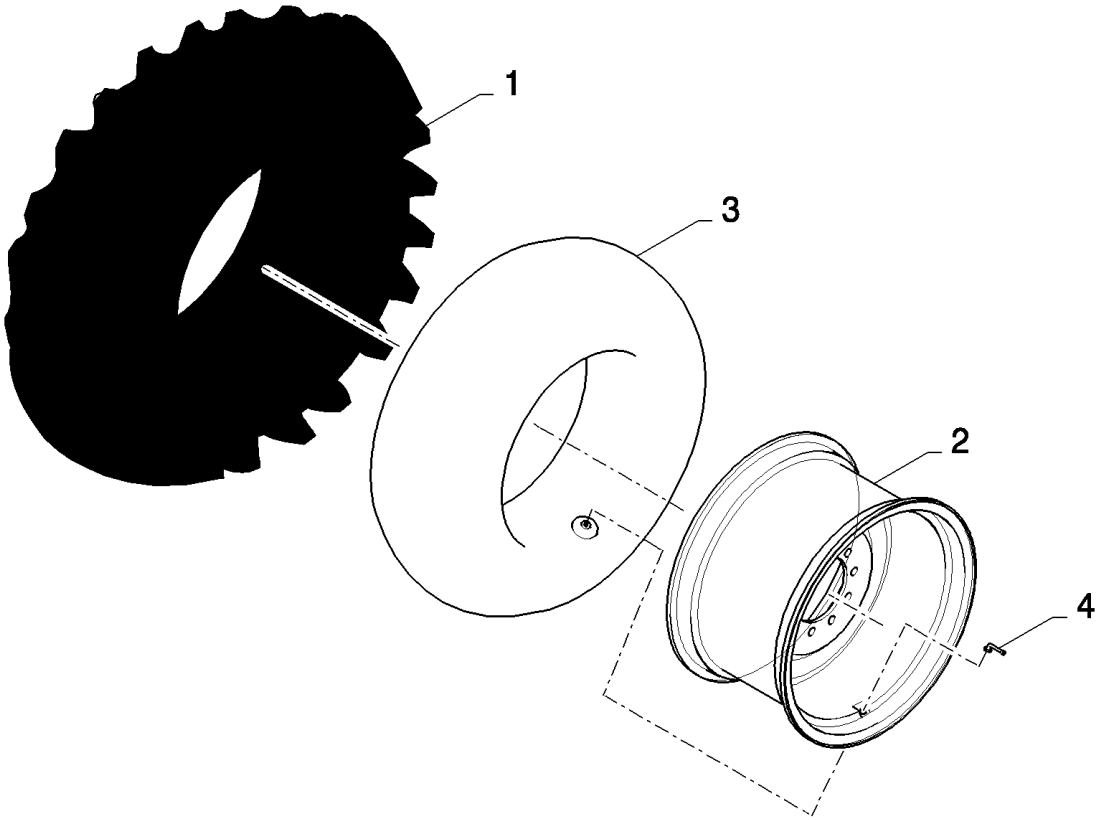

CX880 COMBINE - BASE UNIT (2/01-)

11.061(01) STEERING WHEELS : 18.4-30IND-14PR-SGL-R-4

ссылка	Номер детали	Кол-во	Описание
1	84607492	1	TYRE/TIRE,
2	84607504	1	WHEEL,
3	750356	1	TUBE, TYRE/TIRE,
4	9507108	1	VALVE STEM,

11.062(01) STEERING WHEELS : 14.9-24IND-16PR-ISG-R-4

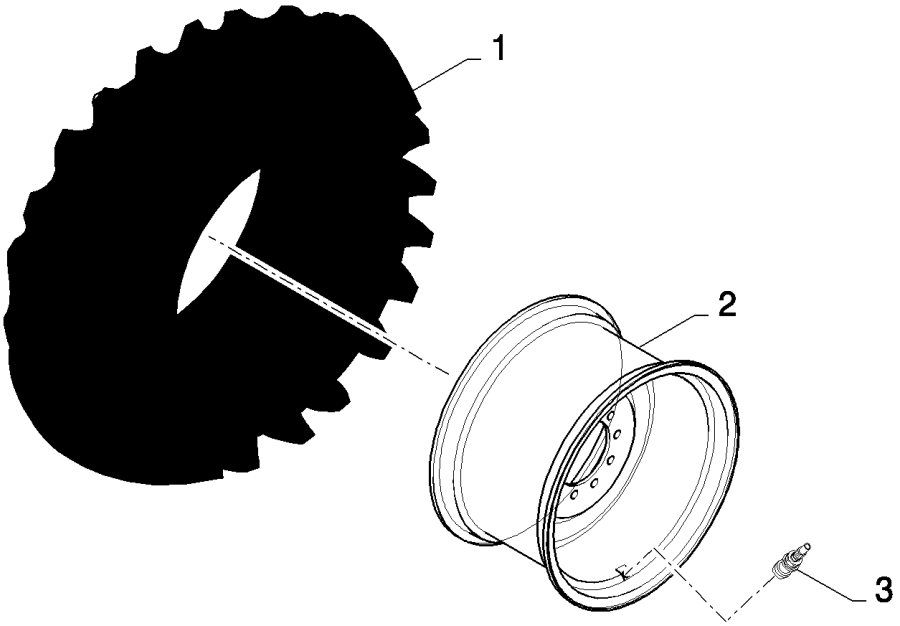

CX880 COMBINE - BASE UNIT (2/01-)

11.062(01) STEERING WHEELS : 14.9-24IND-16PR-ISG-R-4

ссылка	Номер детали	Кол-во	Описание
1	84058908	1	TYRE/TIRE, , BSN C495
1	87328726	1	TYRE/TIRE, , ASN D496
2	84439760	1	RIM,
3	395448	1	VALVE STEM,

11.063(01) STEERING WHEELS : 18.4-38-12PR-DTII-R-I

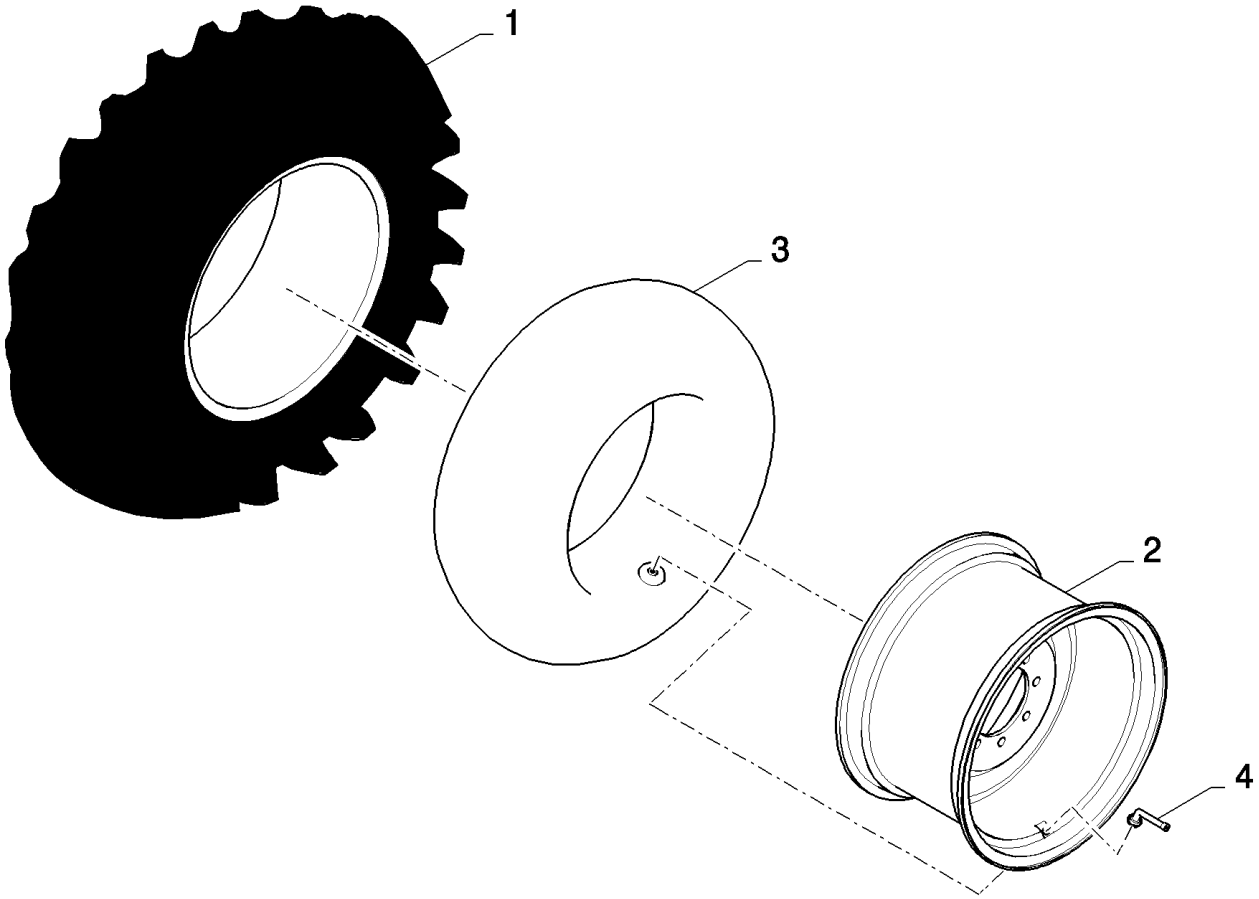

CX880 COMBINE - BASE UNIT (2/01-)

11.063(01) STEERING WHEELS : 18.4-38-12PR-DTII-R-I

ссылка	Номер детали	Кол-во	Описание
1	84807847	1	TYRE/TIRE,
2	84807849	1	RIM,
3	84817283	1	TUBE, TYRE/TIRE,
4	9507108	1	VALVE STEM,

11.064(01) STEERING WHEELS : 540/65R30-150D-XM108-R-1

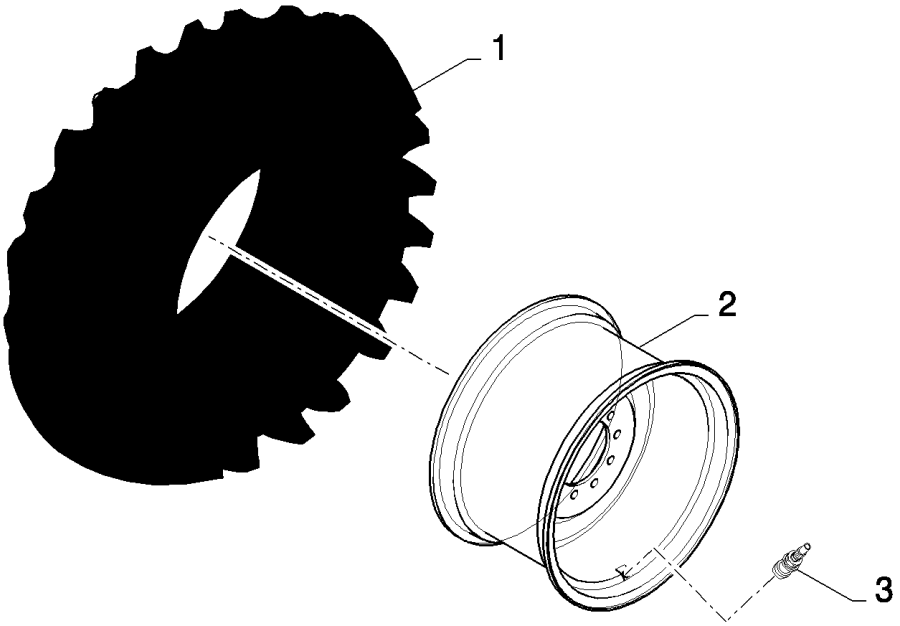

CX880 COMBINE - BASE UNIT (2/01-)

11.064(01) STEERING WHEELS : 540/65R30-150D-XM108-R-1

ссылка	Номер детали	Кол-во	Описание
1	84817482	1	TYRE/TIRE,
2	84989718	1	RIM,
3	395448	1	VALVE STEM,

11.065(01) STEERING WHEELS : 480/70R30-150A8

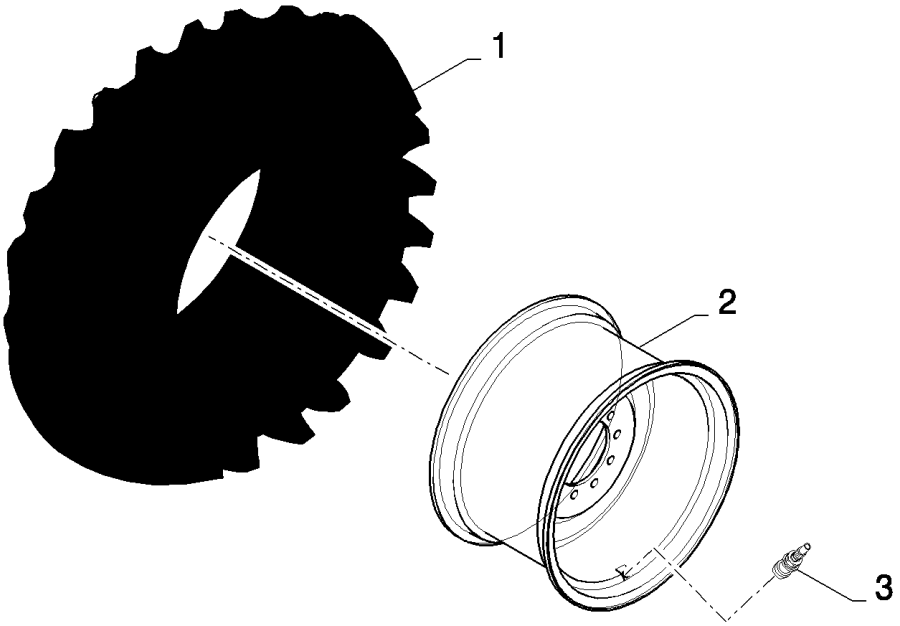

CX880 COMBINE - BASE UNIT (2/01-)

11.065(01) STEERING WHEELS : 480/70R30-150A8

ссылка	Номер детали	Кол-во	Описание
1	84817585	1	TYRE/TIRE,
2	84989718	1	RIM,
3	395448	1	VALVE STEM,

11.066(01) STEERING WHEELS : 460/70R24-150A8(70)

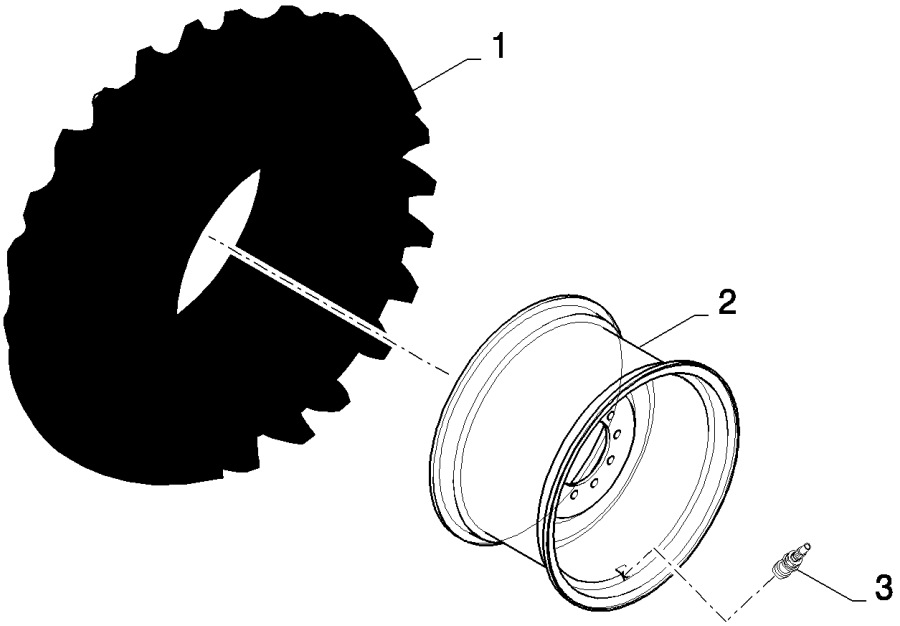

CX880 COMBINE - BASE UNIT (2/01-)

11.066(01) STEERING WHEELS : 460/70R24-150A8(70)

ссылка	Номер детали	Кол-во	Описание
1	9514625	1	TYRE/TIRE, , BSN C387
1	84801075	1	TYRE/TIRE, , ASN D388
2	84449640	1	RIM,
3	395448	1	VALVE STEM,

11.067(01) STEERING WHEELS : 28LR26-157A8(-25)

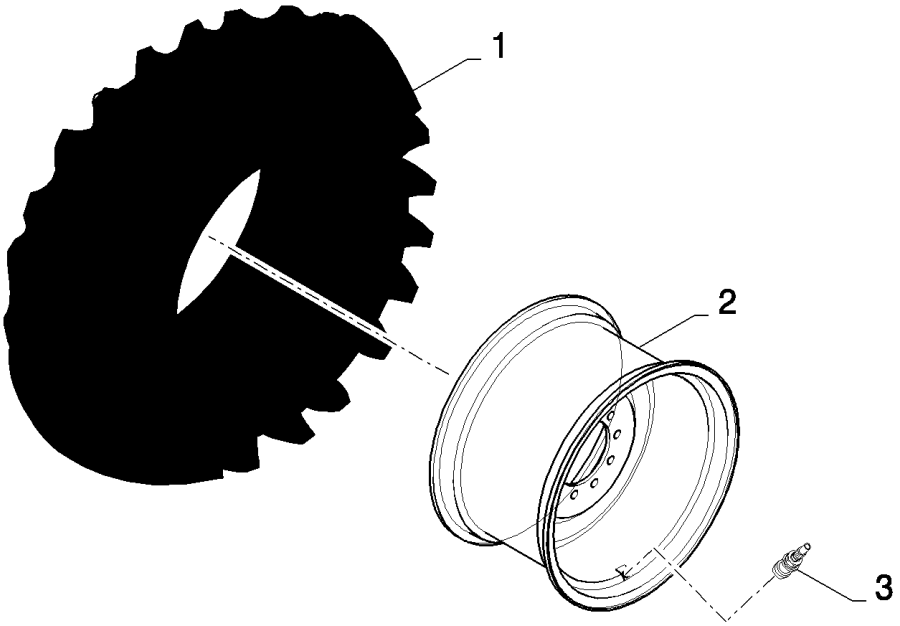

CX880 COMBINE - BASE UNIT (2/01-)

11.067(01) STEERING WHEELS : 28LR26-157A8(-25)

ссылка	Номер детали	Кол-во	Описание
1	9515489	1	TYRE/TIRE,
2	84449743	1	RIM,
3	395448	1	VALVE STEM,

11.068(01) STEERING WHEELS : 480/70R30-155A8

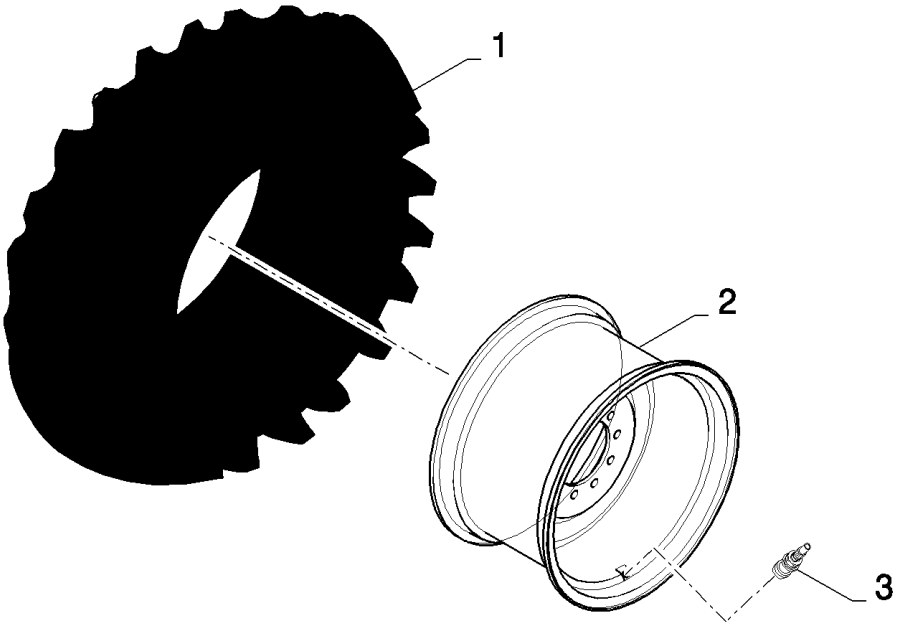

CX880 COMBINE - BASE UNIT (2/01-)

11.068(01) STEERING WHEELS : 480/70R30-155A8

ссылка	Номер детали	Кол-во	Описание
1	87346811	1	TYRE/TIRE,
2	84989718	1	RIM,
3	80395448	1	VALVE, PNEUMATIC,

11.100(01) TRACKS - C281

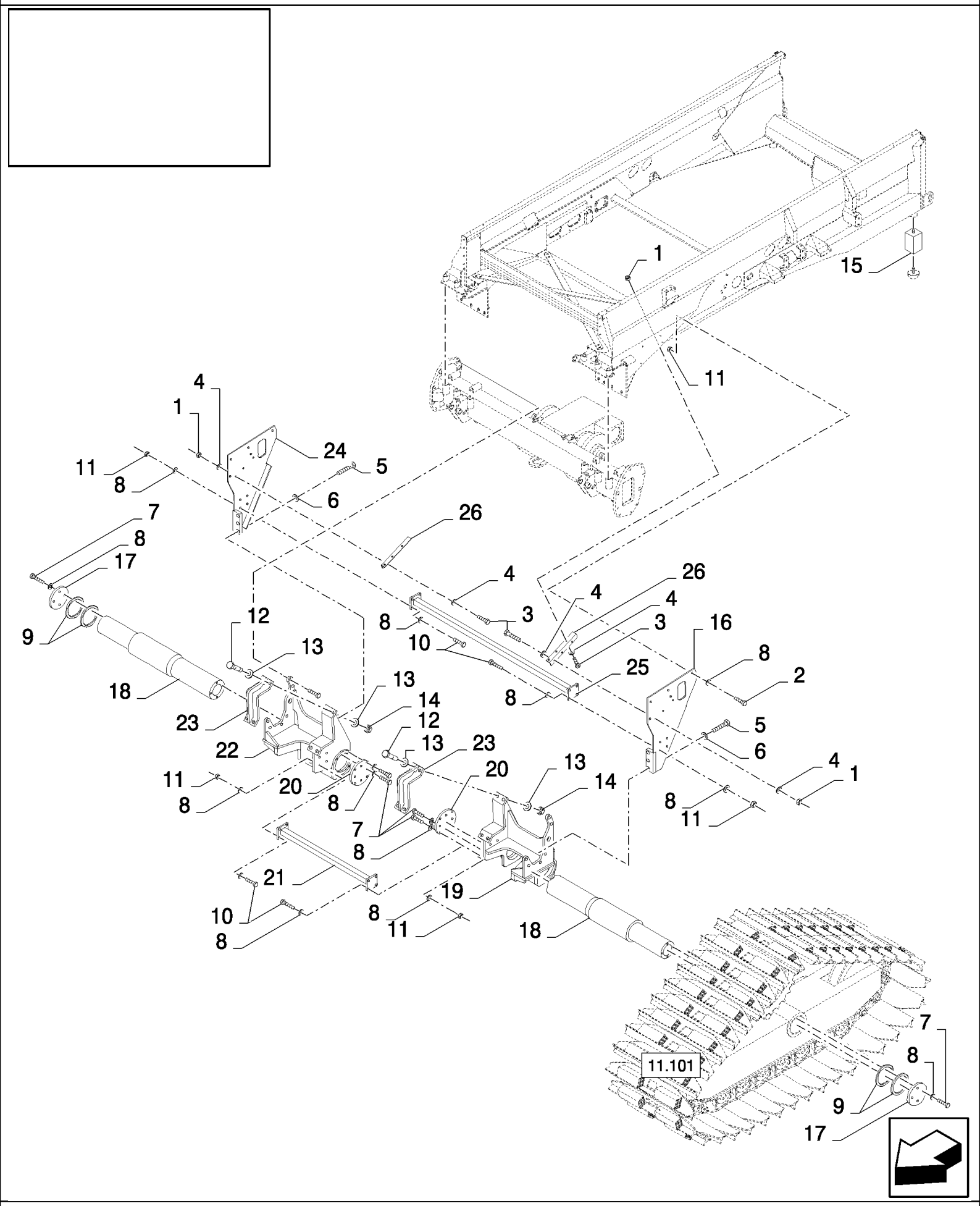

CX880 COMBINE - BASE UNIT (2/01-)

11.100(01) TRACKS - C281

ссылка	Номер детали	Кол-во	Описание
1	9706685	12	NUT, M12, Cl 8,
2	86508583	10	BOLT, Hex, M16 x 35, 8.8,
3	300389	12	BOLT, Hex, M12 x 35, 8.8, Full Thd,
4	86511324	18	WASHER, M12 x 24 x 2.5,
5	9843590	6	BOLT, Hex, M20 x 50, 10.9,
6	86511327	6	WASHER, M20 x 37 x 3,
7	385922	16	SCREW, Hex, M16 x 45, 8.8,
8	86511326	AR	WASHER, M16 x 30 x 3,
9	84441087	4	WASHER,
10	385923	16	SCREW, Hex, M16 x 55, 8.8, Full Thd, Hex, M16 x 55, 8.8, Full Thd
11	100020	26	NUT, M16, Cl 8,
12	84441074	8	SCREW,
13	86511328	16	WASHER, M24 x 34 x 4,
14	100024	8	NUT, M24 x 1.5, Cl 8,
15	84441061	2	BLOCK,
16	84441062	1	SUPPORT,
17	84441066	2	RING,
18	84441068	2	SHAFT,
19	84441069	1	SUPPORT,
20	84441070	2	RING,
21	84441084	1	SUPPORT, , FOR CX720, CX740, CX760, CX780 ONLY
21	84442236	1	SUPPORT, , FOR CX820, CX840, CX860, CX880 ONLY
22	84441072	1	SUPPORT,
23	84441073	2	SUPPORT,
24	84441075	1	SUPPORT,
25	84441083	1	SUPPORT, , FOR CX720, CX740, CX760, CX780 ONLY
25	84442237	1	SUPPORT, , FOR CX820, CX840, CX860, CX880 ONLY
26	84441077	2	ANGLE,

11.101(01) TRACKS - C281

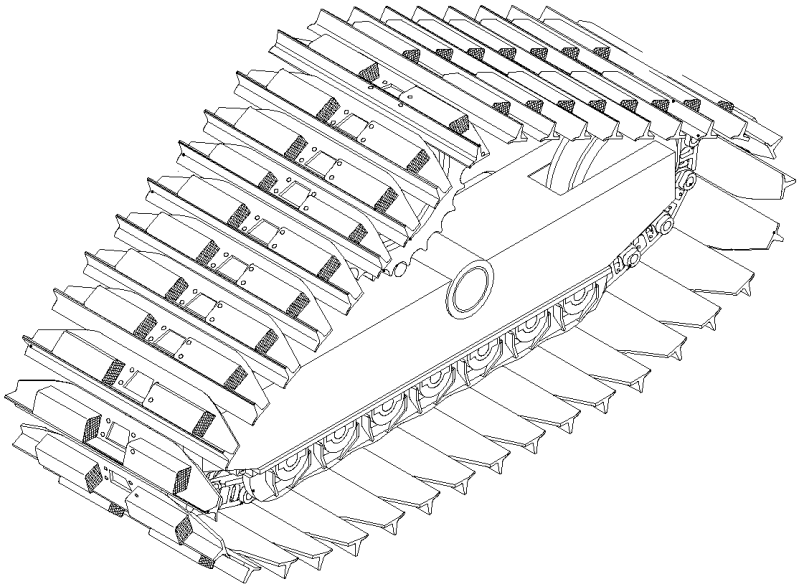

NO INFO AVAILABLE YET

ссылка	Номер детали	Кол-во	Описание

11.110(01) TRACK PLATES - D348

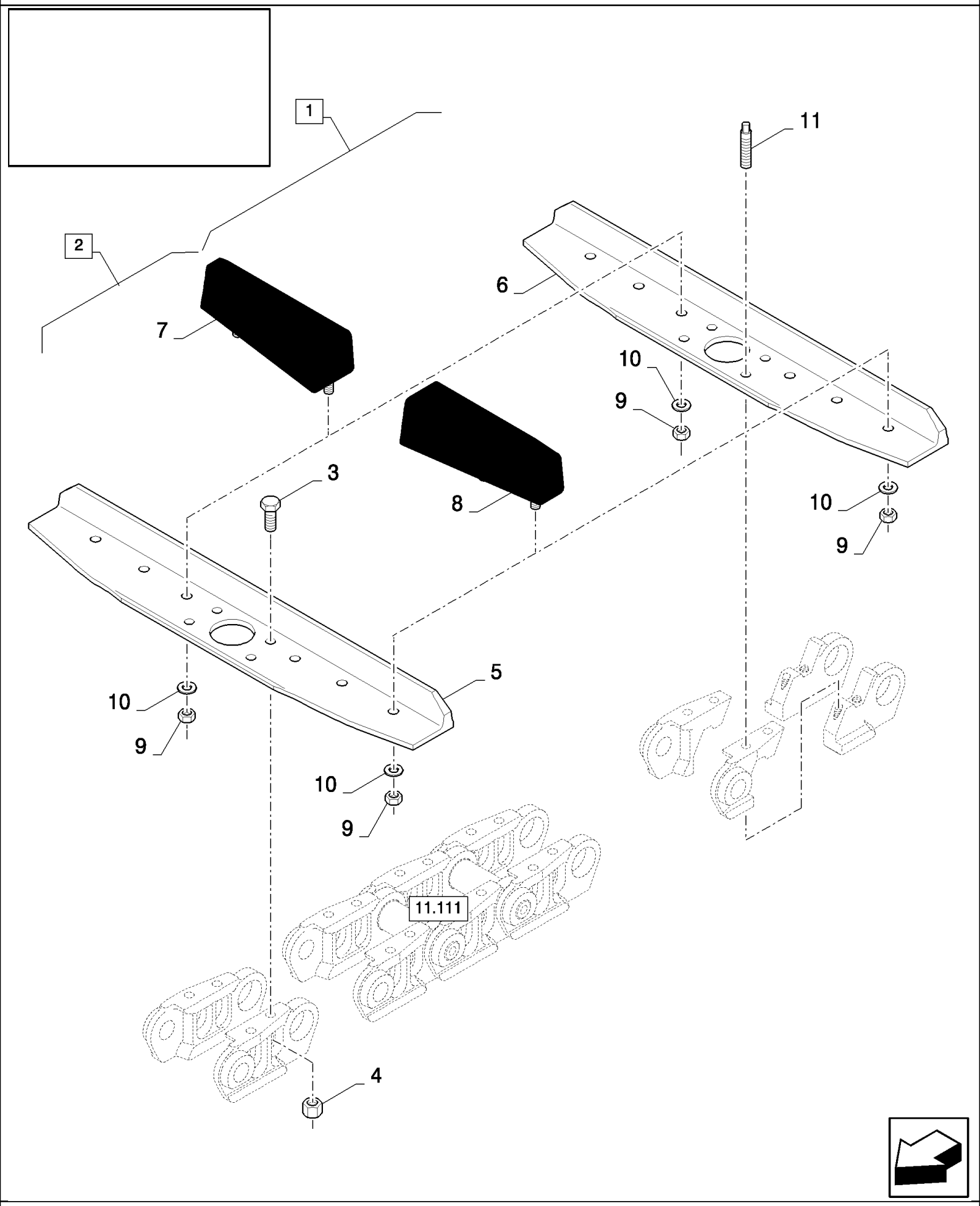

CX880 COMBINE - BASE UNIT (2/01-)

11.110(01) TRACK PLATES - D348

ссылка	Номер детали	Кол-во	Описание
1	84800353	2	PAD, RUBBER, (6 to 10), FOR 800MM ONLY
1	84800347	2	PAD, RUBBER, (6 to 10), FOR 900MM ONLY
1	84800351	2	PAD, RUBBER, (6 to 10), FOR 1000MM ONLY
2	84800354	74	PAD, RUBBER, (5, 7 to 10), FOR 800MM ONLY
2	84800348	74	PAD, RUBBER, (5, 7 to 10), FOR 900MM ONLY
2	84800352	74	PAD, RUBBER, (5, 7 to 10), FOR 1000MM ONLY
3	84800349	304	SCREW,
4	84800350	304	NUT,
5	84800407	74	PLATE, TRACK, , FOR 800MM ONLY
5	84800411	74	PLATE, TRACK, , FOR 900MM ONLY
5	84800415	74	SHOE, , FOR 1000MM ONLY
6	84800408	2	PLATE, TRACK, , FOR 800MM ONLY
6	84800412	2	PLATE, TRACK, , FOR 900MM ONLY
6	84800416	2	BLADE, , FOR 1000MM ONLY
7	84800409	76	PAD, RUBBER, RH, FOR 800MM ONLY
7	84800413	76	PAD, RUBBER, RH, FOR 1000MM ONLY, FOR 900MM ONLY
8	84800410	76	PAD, RUBBER, LH, FOR 800MM ONLY
8	84800414	76	PAD, RUBBER, LH, FOR 1000MM ONLY, FOR 900MM ONLY
9	86509246	456	NUT, M16, Cl 8, M16
10	86511326	456	WASHER, M16 x 30 x 3,
11	84800301	2	SCREW,

11.111(01) TRACKS, CHAIN - D348

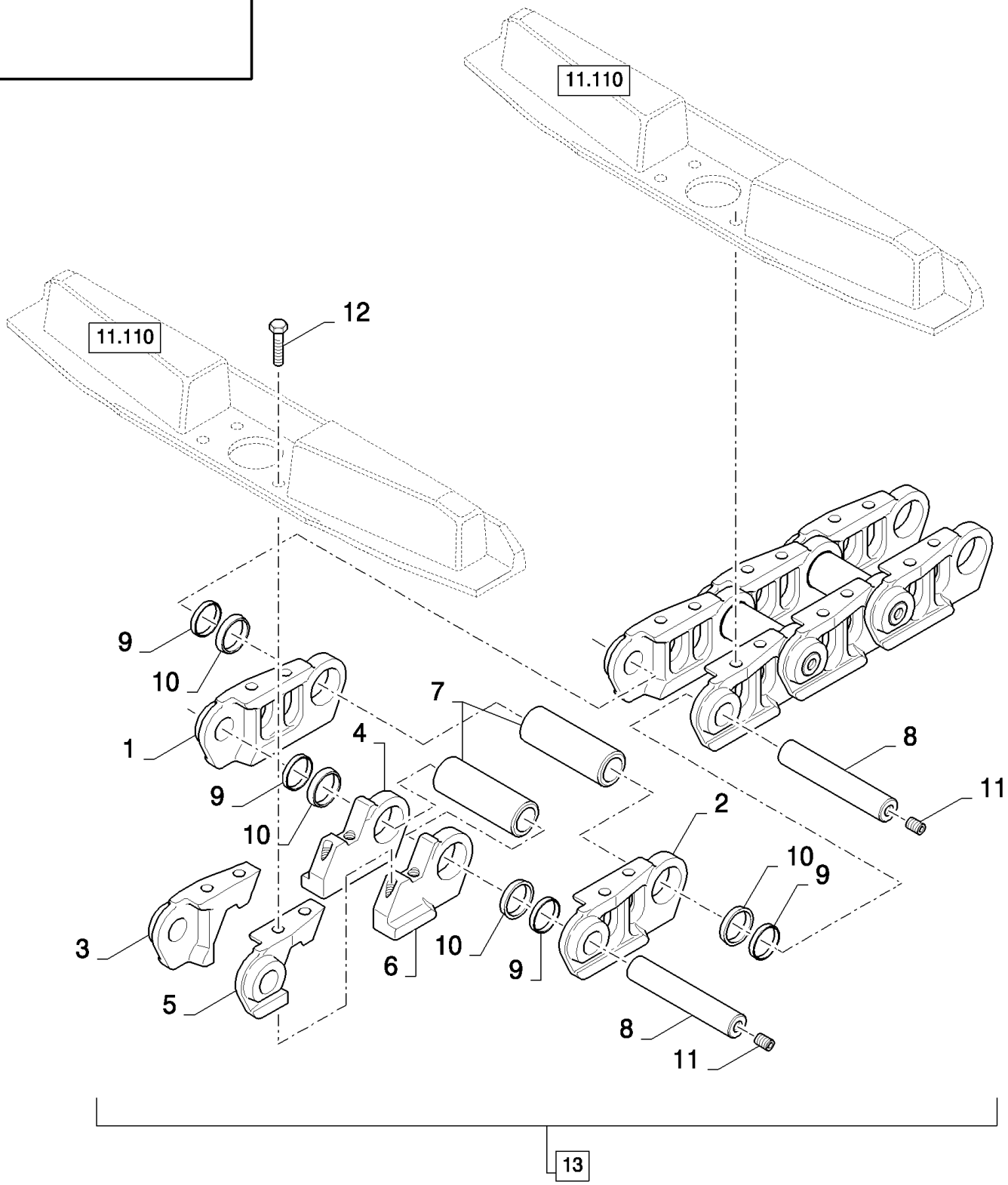

CX880 COMBINE - BASE UNIT (2/01-)

11.111(01) TRACKS, CHAIN - D348

ссылка	Номер детали	Кол-во	Описание
1	84800404	74	TRACK LINK, RH
2	84800405	74	TRACK LINK, LH
3	84800406	2	TRACK LINK, RH
4	84800157	2	TRACK LINK, RH
5	84800158	2	TRACK LINK, LH
6	84800159	2	TRACK LINK, LH
7	84800160	76	BUSHING,
8	84800296	76	PIN,
9	84800400	152	SPACER,
10	84800401	152	RING,
11	84800402	76	PLUG,
12	84800403	8	SCREW,
13	84800280	2	CHAIN, TRACK, (1 to 12)

11.112(01) TRACK SUPPORTS - D348

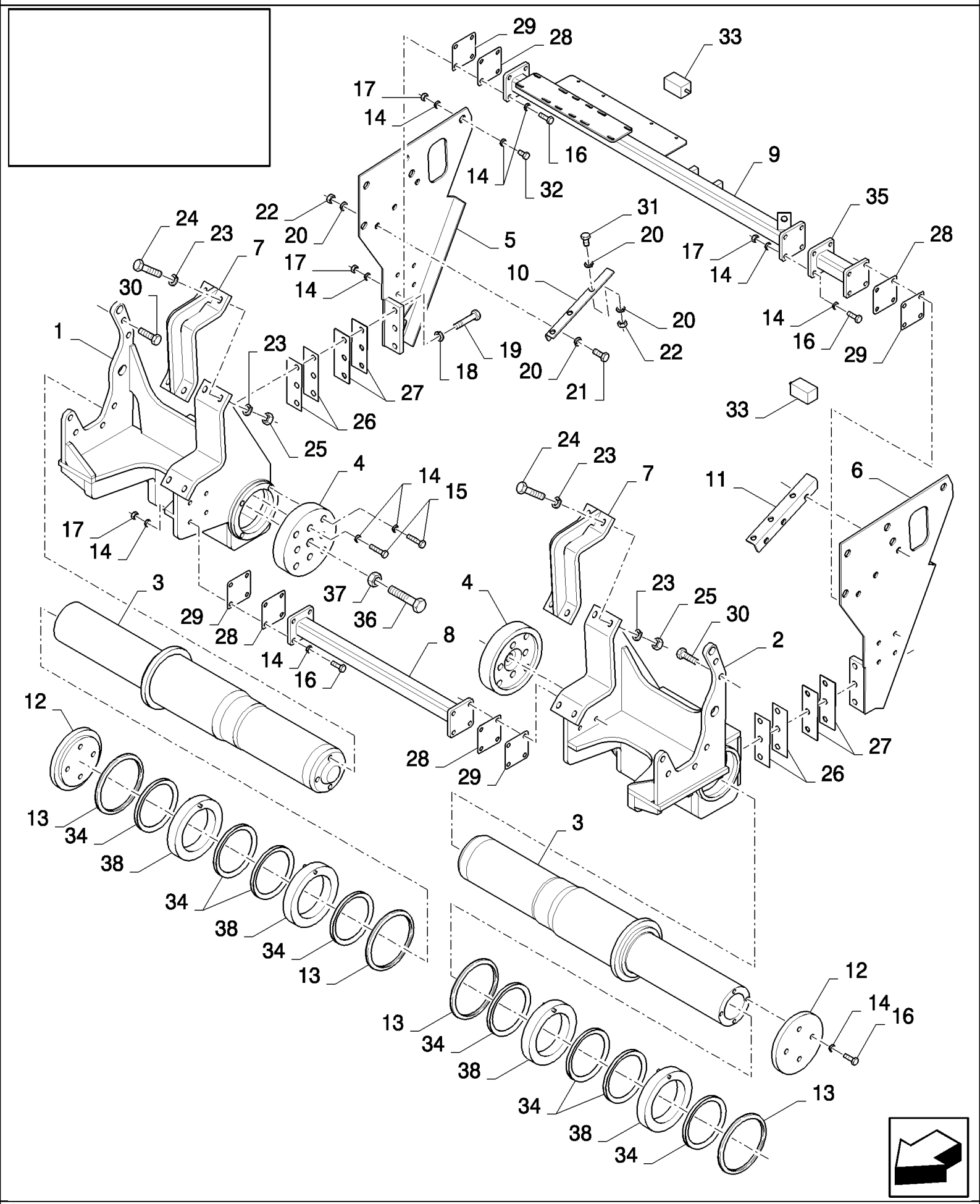

CX880 COMBINE - BASE UNIT (2/01-)

11.112(01) TRACK SUPPORTS - D348

ссылка	Номер детали	Кол-во	Описание
1	84800302	1	SUPPORT,
2	84800303	1	SUPPORT,
3	84800304	2	SHAFT,
4	84800305	2	COVER,
5	84800306	1	SUPPORT, LH
6	84800307	1	SUPPORT, RH
7	84441073	2	SUPPORT,
8	84441084	1	SUPPORT, , FOR 1960MM ONLY
8	84442236	1	SUPPORT, , FOR 2200MM ONLY
9	84441083	1	SUPPORT,
10	84800308	1	ANGLE BAR, LH
11	84441077	1	ANGLE, RH
12	84441066	2	RING,
13	84441087	4	WASHER,
14	84800287	84	RING, LOCKING, 17MM
15	9847468	16	BOLT, Hex, M16 x 70, 10.9, Hex, M16 x 70, 10.9
16	9828248	28	BOLT, Hex, M16 x 60, 10.9,
17	392530	30	NUT, M16, Cl 10,
18	84800297	6	RING, LOCKING, 21MM
19	9843495	6	SCREW, Hex, M20 x 60, 10.9,
20	84800309	24	RING, LOCKING, 13MM
21	300389	6	BOLT, Hex, M12 x 35, 8.8, Full Thd,
22	9706685	12	NUT, M12, Cl 8,
23	84800295	16	RING, LOCKING, 25MM
24	87017607	8	BOLT, Hex, M24 x 90, 10.9, M24x90
25	9848973	8	NUT, M24, Cl 10, M24
26	84800310	4	SHIM,
27	84800311	4	SHIM,
28	84800312	4	SHIM,
29	84800313	4	SHIM,
30	9846949	12	BOLT, Hex, M20 x 80, 10.9, M20x80
31	300388	6	SCREW, Hex, M12 x 25, 8.8,
32	86529976	10	BOLT, Hex, M16 x 35, 10.9, Hex, M16 x 35, 10.9
33	84441061	2	BLOCK,
34	84800314	8	GASKET,
35	84800315	1	REINFORCEMENT, , FOR 1960MM ONLY
35	84800318	1	BEAM, , FOR 2200MM ONLY
36	87301265	2	BOLT, Hex, M30 x 4 x 100, 10.9, M30x100
37	325290	2	NUT, M30, Cl 8, M30
38	84800317	4	SPACER,

11.113(01) TRACK - D348

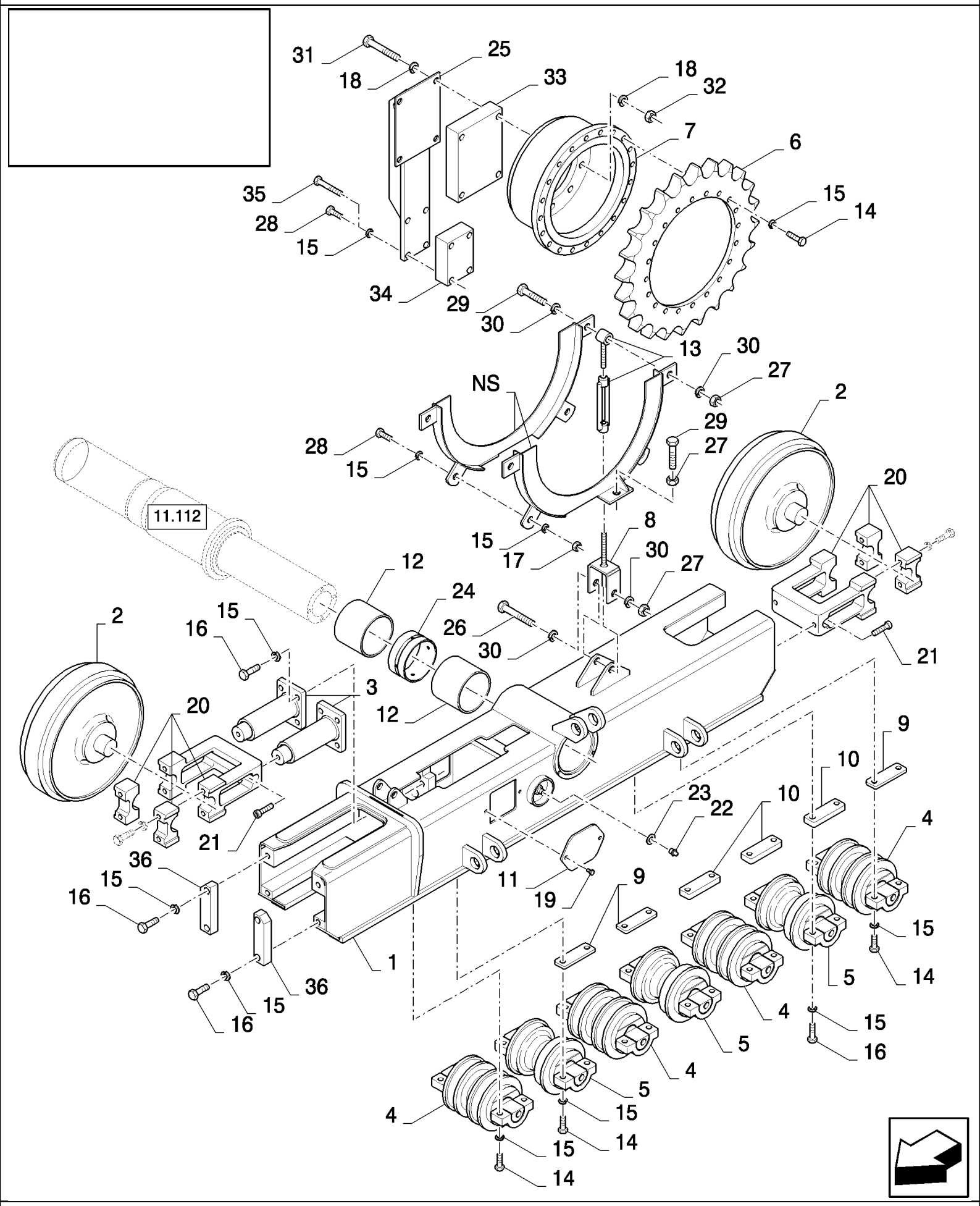

CX880 COMBINE - BASE UNIT (2/01-)

11.113(01) TRACK - D348

ссылка	Номер детали	Кол-во	Описание
1	84800276	1	FRAME, LH
1	84800277	1	FRAME, RH
2	84818540	4	WHEEL, IDLER,
3	84800278	4	CYLINDER, OPERATING,
4	84818541	8	ROLLER,
5	84818542	6	ROLLER,
6	84790418	2	SPROCKET, DRIVEN,
7	84800279	2	CYLINDER, OPERATING,
8	84800281	4	SUPPORT,
9	84800282	12	SUPPORT,
10	84800283	12	SUPPORT,
11	84800284	2	COVER,
12	84800285	4	BUSHING,
13	84800286	4	TENSIONER,
14	9843611	80	BOLT, Hex, M16 x 55, 10.9, Full Thd, Hex, M16 x 55, 10.9, Full Thd
15	84800287	128	RING, LOCKING, 17MM
16	9828248	40	BOLT, Hex, M16 x 60, 10.9,
17	8392530	4	M16
18	84800297	16	RING, LOCKING, 21MM
19	16043224	4	BOLT, Hex, M8 x 16, 8.8, Full Thd,
20	84800288	2	ARMATURE,
21	87301266	8	SCREW, Hex Soc Hd, M16 x 65, 8.8, M16x65
22	84800290	2	NIPPLE, LUBE,
23	84800291	2	RING,
24	84800292	2	BUSHING,
25	84800293	2	SUPPORT,
26	87301267	4	BOLT, Hex, M24 x 150, 10.9, M24x150
27	85700123	16	NUT, M24, Cl 8, M24
28	43168	12	BOLT, Hex, M16 x 40, 8.8,
29	87035337	12	BOLT, Hex, M24 x 100, 10.9, Full Thd, M24x100
30	84800295	16	RING, LOCKING, 25MM
31	86639035	8	BOLT, Hex, M20 x 110, 10.9, Full Thd, M20x100
32	9706694	8	NUT, M20, Cl 8,
33	84800298	2	SHIM,
34	84800299	2	SHIM,
35	350616	8	SCREW, Hex, M16 x 90, 8.8,
36	84800300	4	PLATE,

11.114(01) TRACK, HYDRAULICS: VALVE - D348

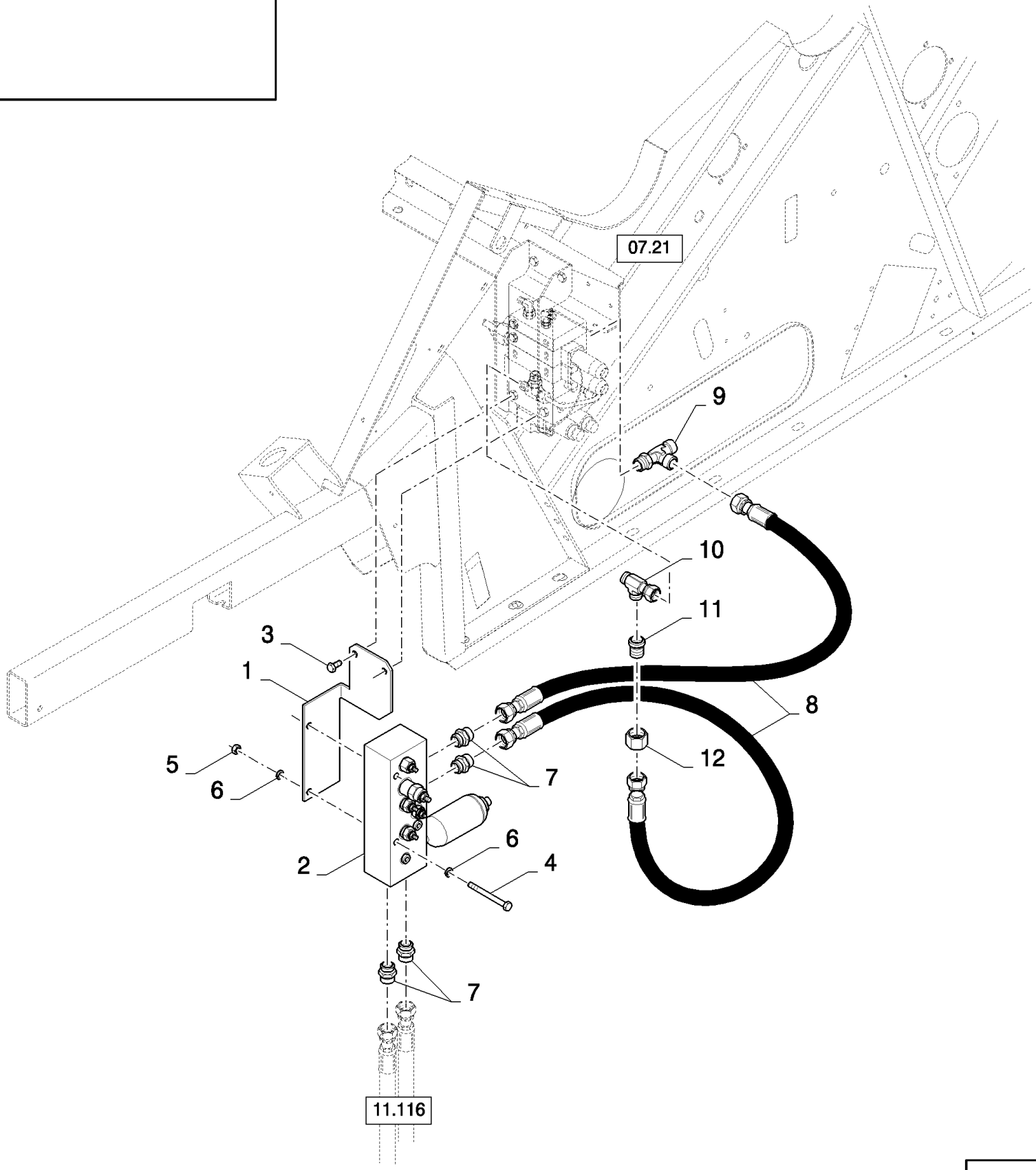

CX880 COMBINE - BASE UNIT (2/01-)

11.114(01) TRACK, HYDRAULICS: VALVE - D348

ссылка	Номер детали	Кол-во	Описание
1	84800320	1	SUPPORT,
2	84800342	1	VALVE, HYDRAULIC,
3	120104	2	SCREW, Hex, M8 x 20, 8.8,
4	86508571	2	SCREW, Hex, M8 x 90, 8.8, M8x90
5	89706690	2	NUT, M8, Cl 8,
6	80681	2	WASHER, LOCK, 5/16",
7	84800321	4	CONNECTOR, HYD.,
8	84800322	2	HOSE,
9	86597759	1	TEE, 13/16"-16 ORFS x M18 x 1.5 ORB Run,
10	84989850	1	CONNECTION, 3 WAY,
11	85802819	1	NUT, PIPE UNION,
12	84819551	1	ADAPTER,

11.115(01) TRACK, HYDRAULICS: FRAME - D348

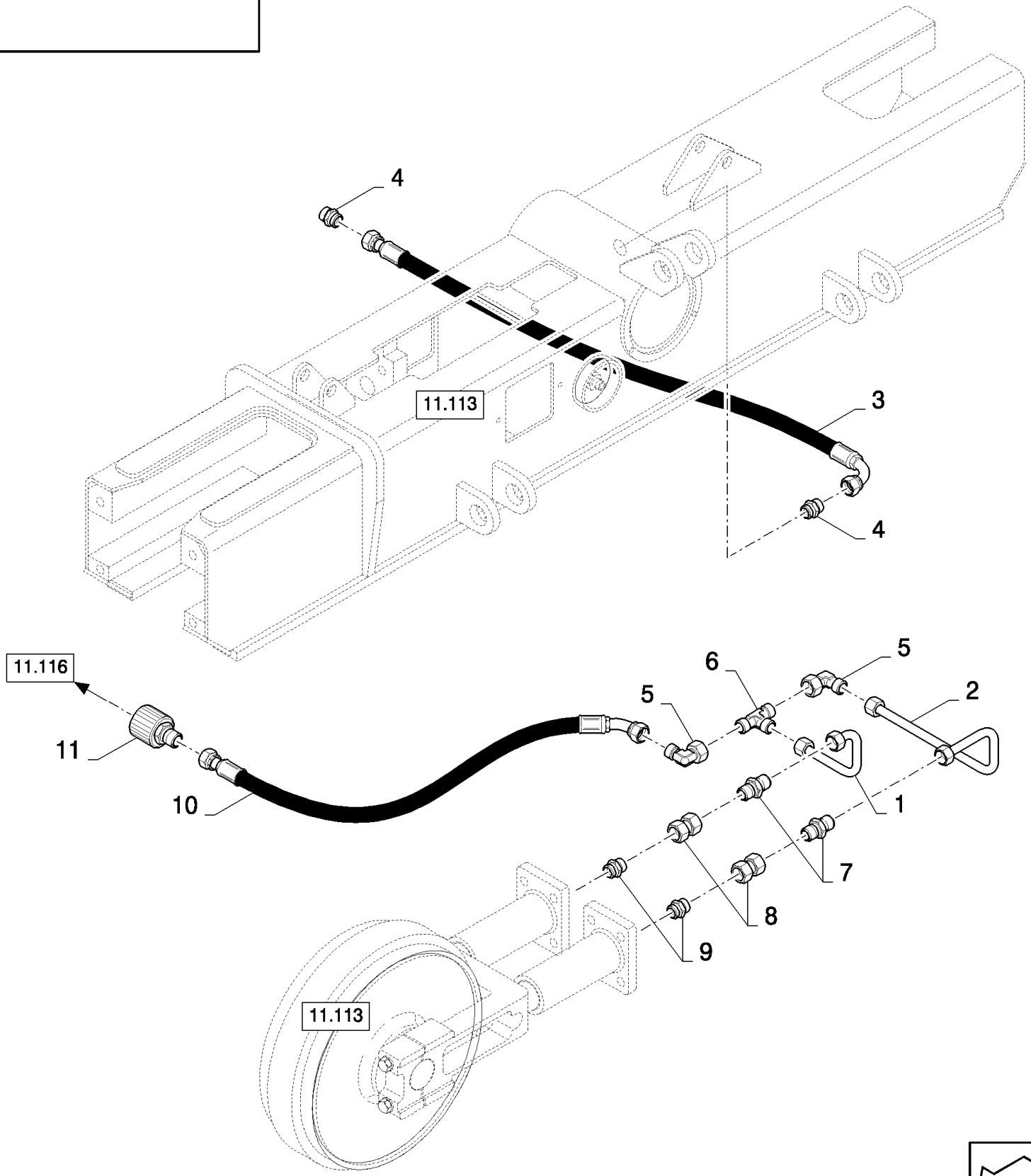

CX880 COMBINE - BASE UNIT (2/01-)

11.115(01) TRACK, HYDRAULICS: FRAME - D348

ссылка	Номер детали	Кол-во	Описание
1	84800339	1	TUBE, LH
1	84800341	1	TUBE, RH
2	84800338	1	TUBE, LH
2	84800340	1	TUBE, RH
3	84800336	2	HOSE,
4	84800337	4	CONNECTOR, HYD.,
5	84800325	4	ELBOW,
6	150019	2	CONNECTION, 3 WAY,
7	150018	4	CONNECTOR, HYD.,
8	84800327	4	CONNECTOR, HYD.,
9	84800333	4	CONNECTOR, HYD.,
10	84800332	2	HOSE,
11	84800331	2	CONNECTOR, HYD.,

11.116(01) TRACK, HYDRAULICS: ACCUMULATORS - D348

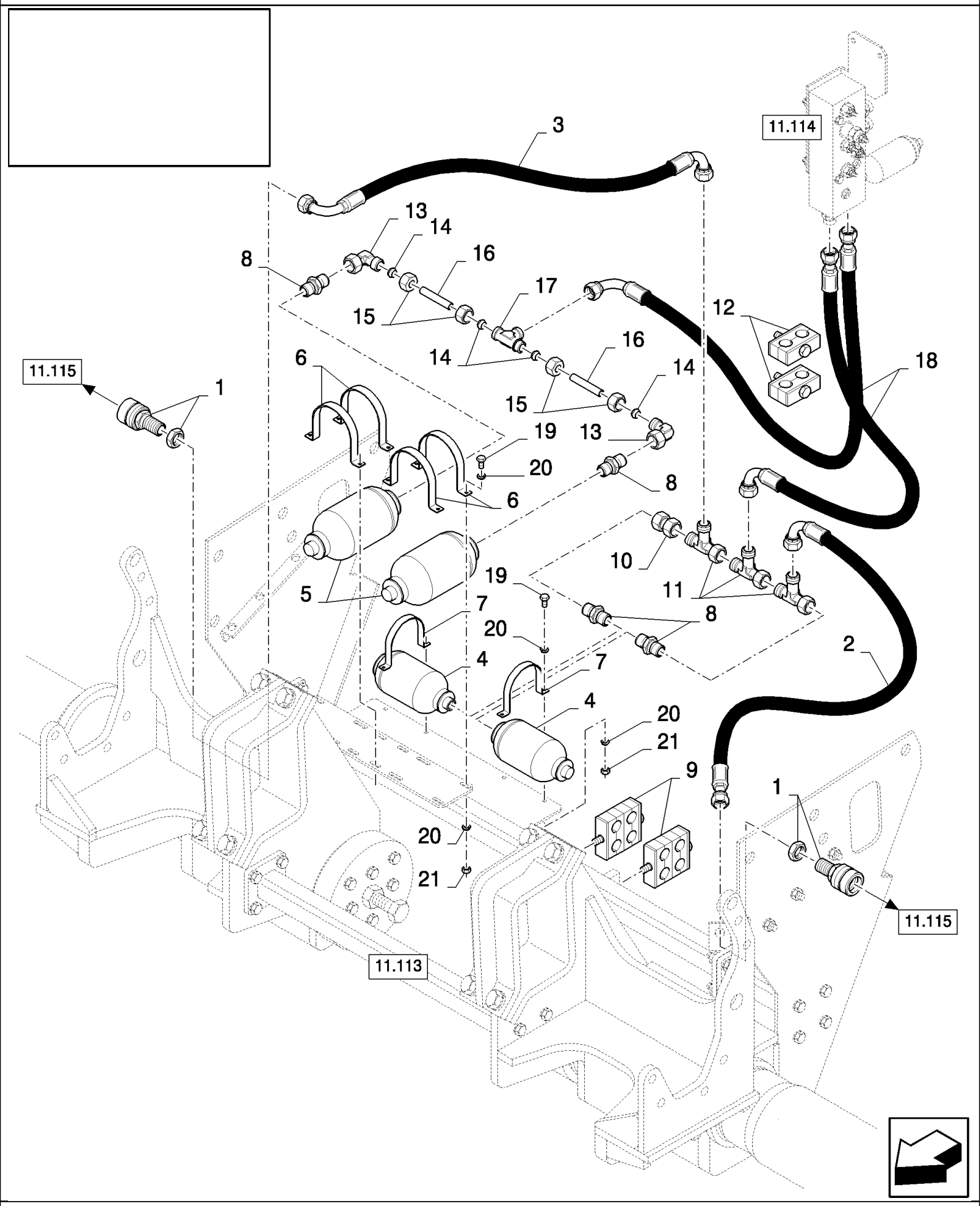

CX880 COMBINE - BASE UNIT (2/01-)

11.116(01) TRACK, HYDRAULICS: ACCUMULATORS - D348

ссылка	Номер детали	Кол-во	Описание
1	84800330	2	CONNECTOR, HYD.,
2	84800328	1	HOSE,
3	84800329	1	HOSE,
4	84800343	2	ACCUMULATOR,
5	84800346	2	ACCUMULATOR,
6	84800344	4	CLAMP,
7	84800345	2	CLAMP,
8	395782	4	CONNECTOR, HYD.,
9	84800335	2	CLAMP,
10	84800327	1	CONNECTOR, HYD.,
11	84800326	3	CONNECTOR, HYD.,
12	84800334	2	CLAMP,
13	84800325	2	ELBOW,
14	150015	4	FERRULE,
15	86548976	4	NUT,
16	84800324	2	TUBE,
17	150019	1	CONNECTION, 3 WAY,
18	84800323	2	HOSE,
19	120104	12	SCREW, Hex, M8 x 20, 8.8,
20	80681	12	WASHER, LOCK, 5/16",
21	89706690	12	NUT, M8, Cl 8,

MAIN FRAME	**CHÂSSIS PRINCIPAL**	**BASTIDOR PRINCIPAL**	**HOVEDRAMME**
TELAIO PRINCIPALE	**HAUPTGESTELL**	**ESTRUTURA PRINCIPAL**	**HOOFDRAAM**

SEC. 12

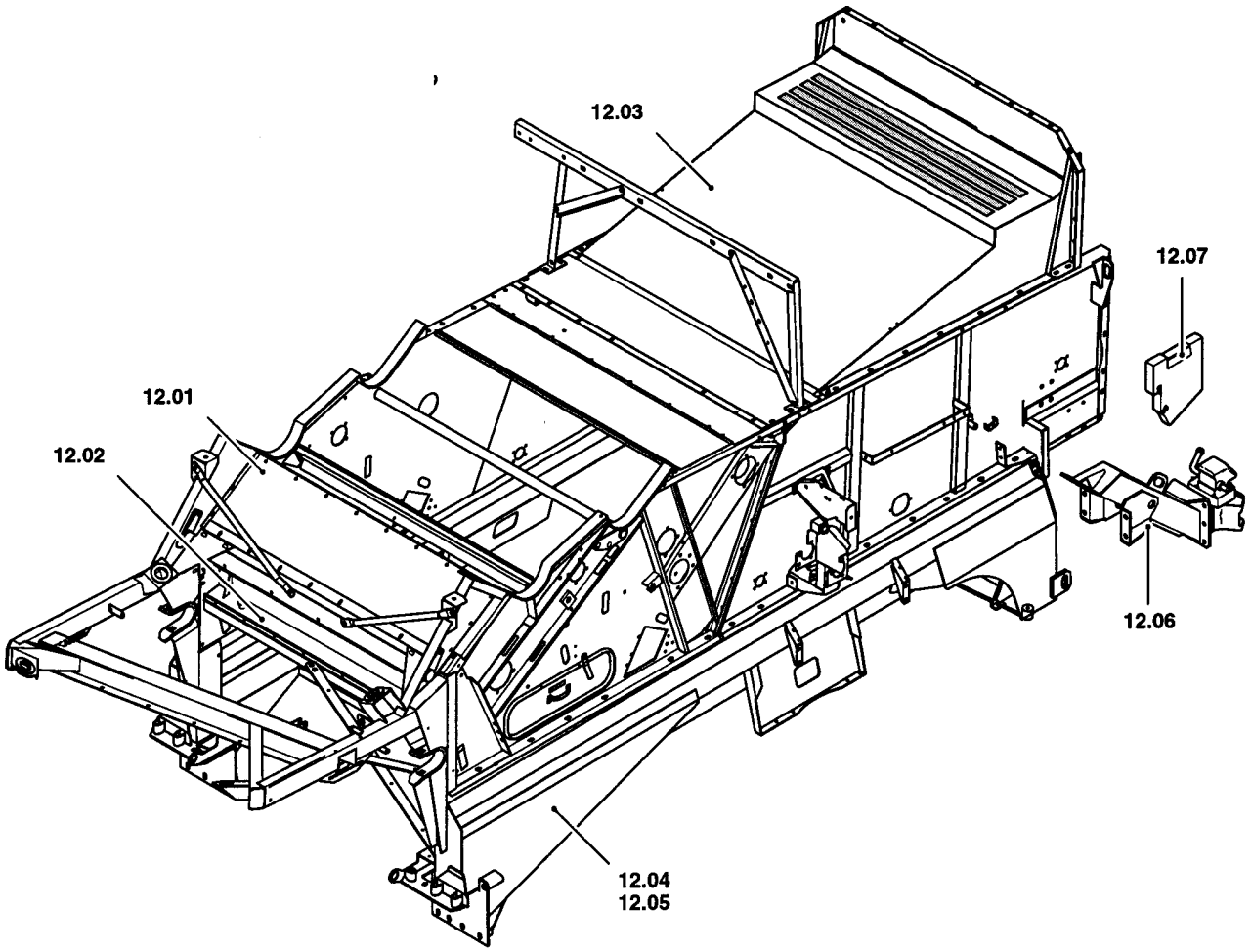

ссылка	Номер детали	Кол-во	Описание

12.01(01) FRAME, THRESHING

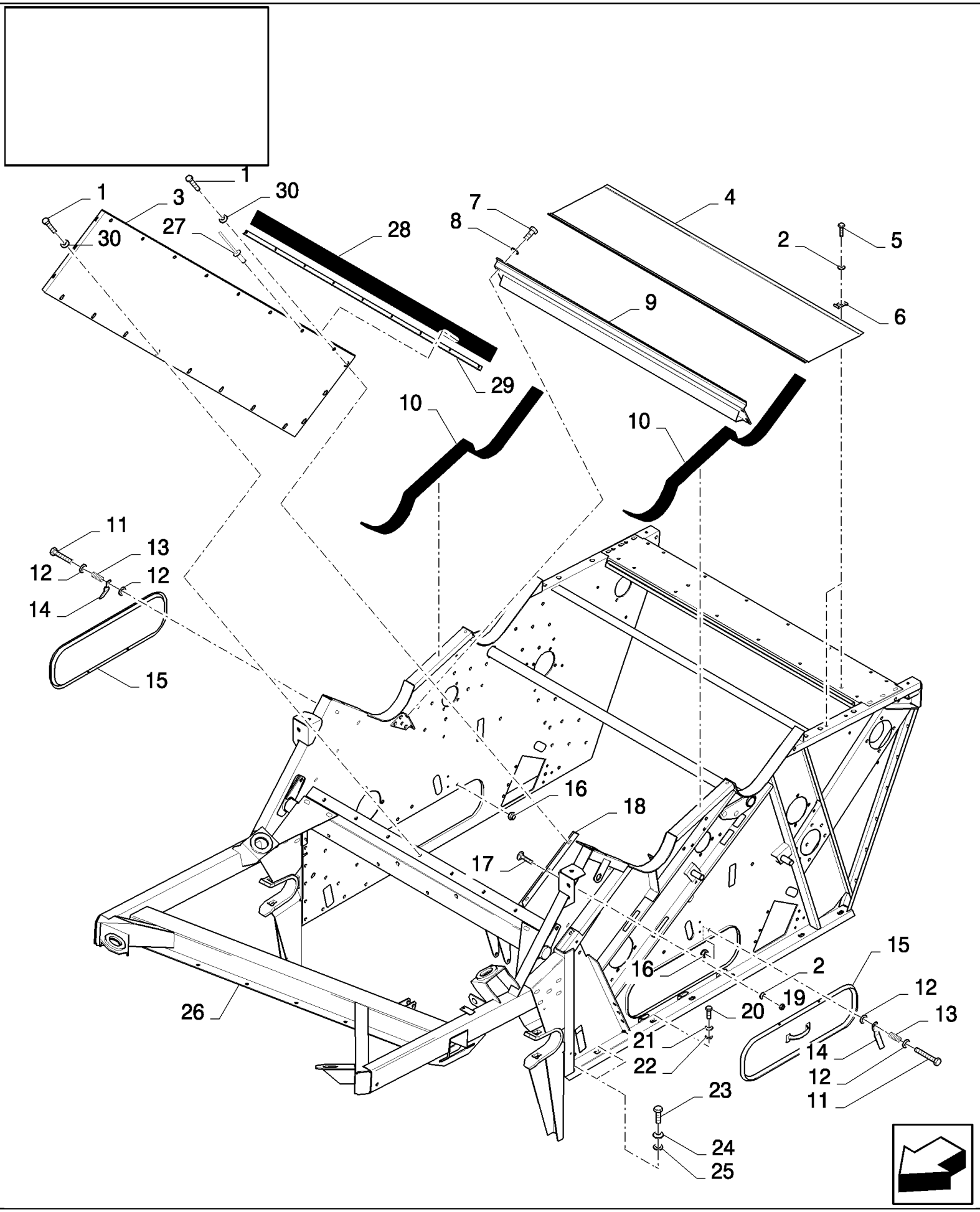

CX880 COMBINE - BASE UNIT (2/01-)

12.01(01) FRAME, THRESHING

ссылка	Номер детали	Кол-во	Описание
2	322358	19	WASHER, SPRING, Belleville, M8,
3	84073681	1	PLATE, , FOR CX820, CX840, CX860, CX880 ONLY
3	84073824	1	PLATE, , FOR CX720, CX740, CX760, CX780 ONLY
4	84073719	1	COVER, , FOR CX820, CX840, CX860, CX880 ONLY, BSN C281
4	84442457	1	COVER, , FOR CX820, CX840, CX860, CX880 ONLY, ASN D282
4	84073858	1	COVER, , FOR CX720, CX740, CX760, CX780 ONLY
5	120104	11	SCREW, Hex, M8 x 20, 8.8,
6	425093	11	CLIP,
7	43138	4	SCREW, Hex, M10 x 20, 8.8, Full Thd,
8	140045	4	WASHER, SPRING, Belleville, M10,
9	84073871	1	PLATE, , FOR CX820, CX840, CX860, CX880 ONLY
9	84073872	1	PLATE, , FOR CX720, CX740, CX760, CX780 ONLY
10	NS	AR	NOT SERVICED, Sealing element
11	300809	4	BOLT, Hex, M12 x 65, 8.8, M12x65
12	378245	3	WASHER, M12, 10MM
13	84989201	4	SPRING,
14	84073708	4	CLAMP,
15	84073477	2	COVER,
16	100038	4	NUT, M12 x 1.75, Cl 8,
17	86507486	6	BOLT, CARRIAGE, Short NK, M8 x 20, Cl8.8, Full Thd,
18	84073682	1	EXTRUSION,
19	89706690	6	NUT, M8, Cl 8,
20	9706687	18	SCREW, Hex, M12 x 30, 8.8,
21	140046	12	WASHER, Belleville, M12,
22	140085	12	WASHER,
23	86508583	4	BOLT, Hex, M16 x 35, 8.8,
24	140048	4	WASHER, SPRING, Belleville, M16,
25	325594	4	WASHER,
26	84073742	1	FRAME, , FOR CX820, CX840, CX860, CX880 ONLY
26	84073780	1	FRAME, , FOR CX720, CX740, CX760, CX780 ONLY
27	80445395	AR	RIVET,
28	84434120	1	CANVAS, , FOR CX820, CX840, CX860, CX880 ONLY
28	84434126	1	CANVAS, , FOR CX720, CX740, CX760, CX780 ONLY
29	84434146	1	PLATE, FIXING, , FOR CX820, CX840, CX860, CX880 ONLY
29	84434140	1	PLATE, FIXING, , FOR CX720, CX740, CX760, CX780 ONLY
30	412650	AR	WASHER, Belleville, M8,
1	16043224	11	BOLT, Hex, M8 x 16, 8.8, Full Thd,

12.02(01) FRAME, THRESHING

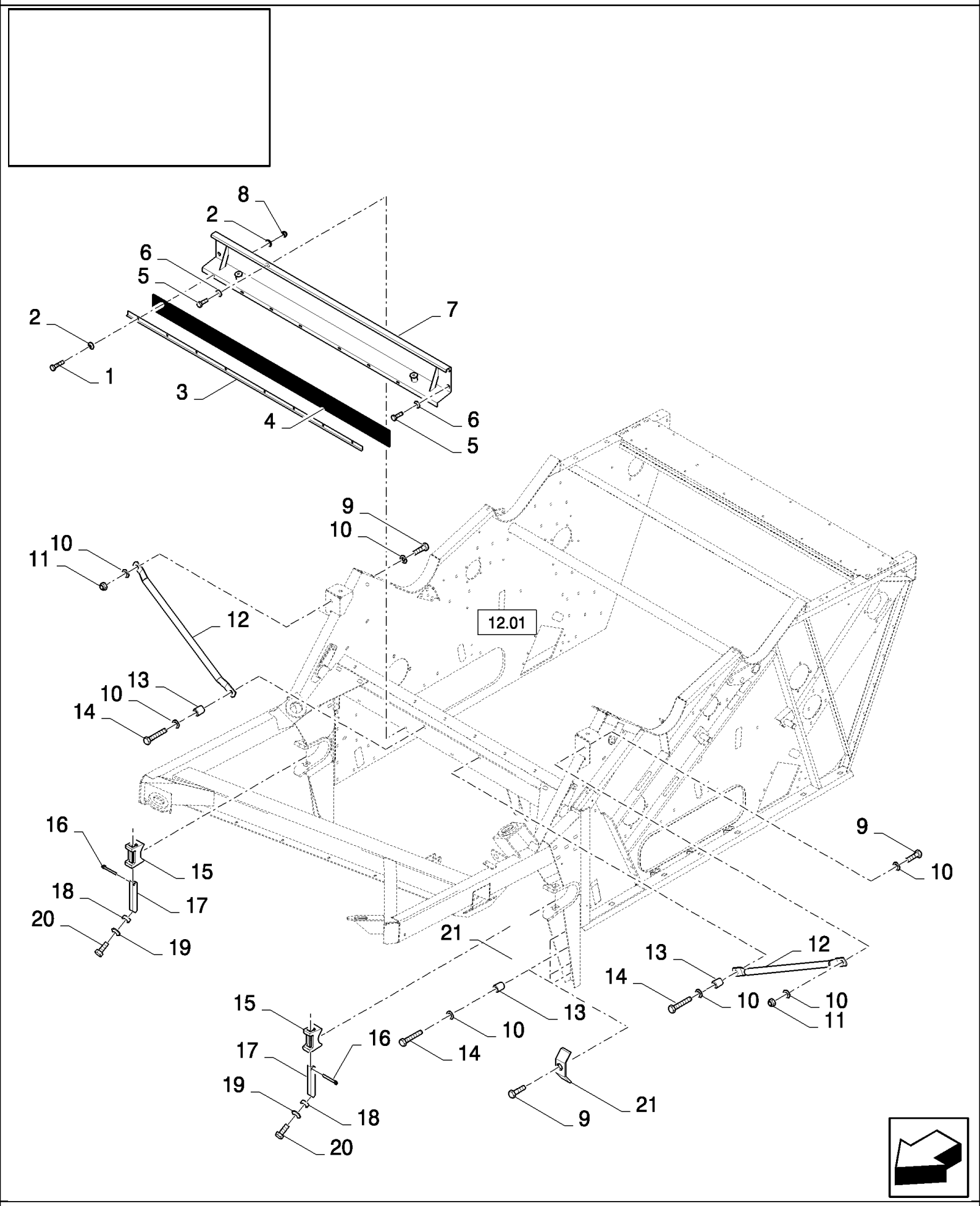

CX880 COMBINE - BASE UNIT (2/01-)

12.02(01) FRAME, THRESHING

ссылка	Номер детали	Кол-во	Описание
1	120100	8	BOLT, Hex, M6 x 20, 8.8,
2	412649	16	WASHER, SPRING, Belleville, M6,
3	84989525	1	PLATE, FIXING, , FOR CX820, CX840, CX860, CX880 ONLY
3	84989504	1	PLATE, FIXING, , FOR CX720, CX740, CX760, CX780 ONLY
4	84073391	1	CANVAS, , FOR CX820, CX840, CX860, CX880 ONLY
4	84073721	1	CANVAS, , FOR CX720, CX740, CX760, CX780 ONLY
5	300388	9	SCREW, Hex, M12 x 25, 8.8,
6	140046	9	WASHER, Belleville, M12,
7	84073419	1	PLATE, , FOR CX820, CX840, CX860, CX880 ONLY
7	84073903	1	PLATE, , FOR CX720, CX740, CX760, CX780 ONLY
8	353308	8	NUT, M6 x 1, Cl 8,
9	43168	2	BOLT, Hex, M16 x 40, 8.8, , BSN C237
9	43168	10	BOLT, Hex, M16 x 40, 8.8, , ASN D238
10	394631	14	WASHER, 16MM, BSN C237
10	394631	6	WASHER, 16MM, ASN D238
11	86000441	2	NUT, M16 x 2, Cl 8,
12	84071853	2	SUPPORT,
13	84073777	10	BUSHING, , BSN C237
13	84073777	2	BUSHING, , ASN D238
14	120093	10	BOLT, Hex, M16 x 80, 8.8, , BSN C237
14	120093	2	BOLT, Hex, M16 x 80, 8.8, , ASN D238
15	84100382	2	CLAMP,
16	9512583	2	PIN, LOCK, M10 x 30, Slotted, Spring, Slot, M10 OD x 30 L
17	84073823	2	SPLINED,
18	9812123	2	RING,
19	322358	2	WASHER, SPRING, Belleville, M8,
20	43127	2	BOLT, Hex, M8 x 25, 8.8,
21	86589278	8	WASHER, SPRING, , ASN D238

12.03(01) STRAW WALKER, FRAME

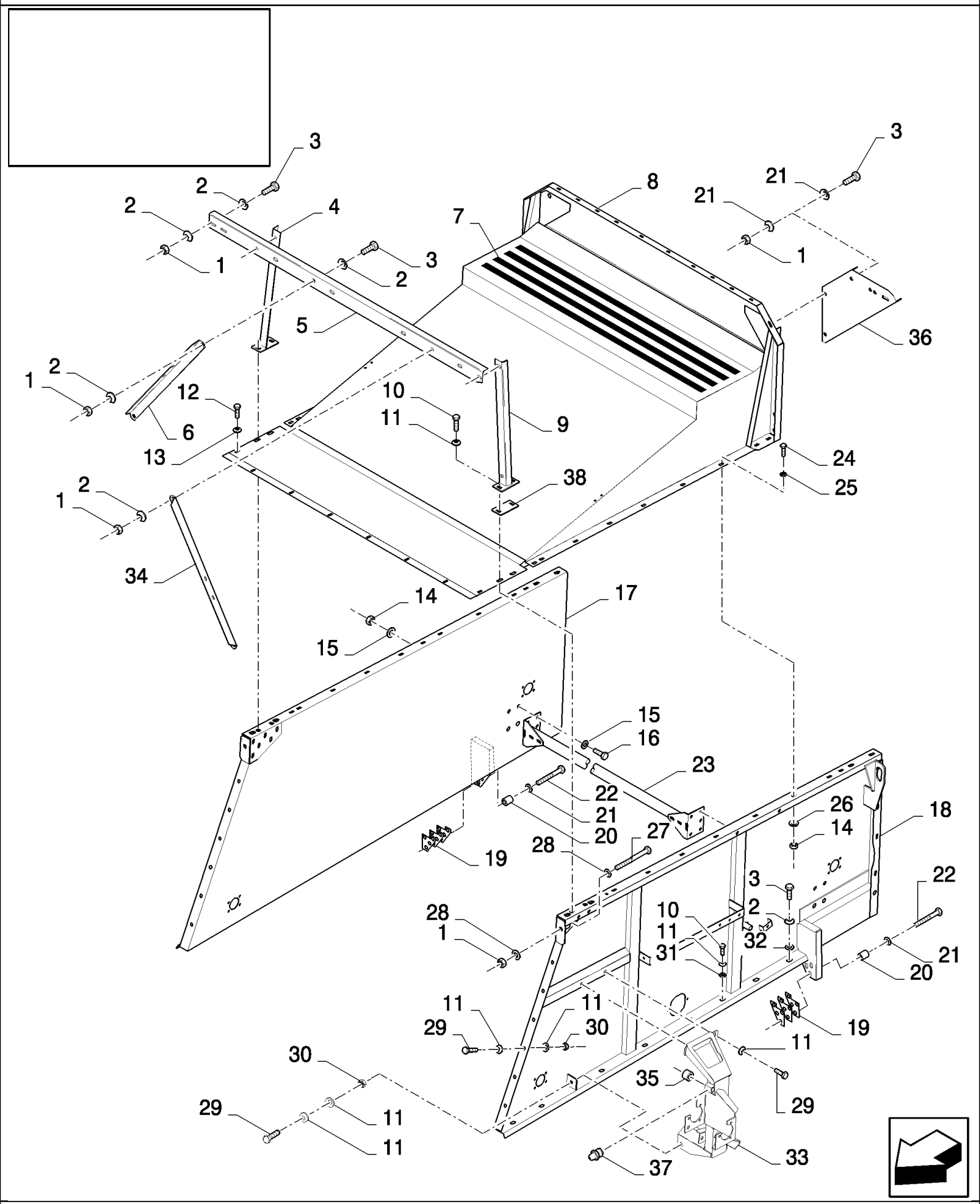

CX880 COMBINE - BASE UNIT (2/01-)

12.03(01) STRAW WALKER, FRAME

ссылка	Номер детали	Кол-во	Описание
1	100020	12	NUT, M16, Cl 8,
2	140048	20	WASHER, SPRING, Belleville, M16,
3	43168	14	BOLT, Hex, M16 x 40, 8.8,
4	84072952	1	SUPPORT, , FOR CX820, CX840, CX860, CX880 ONLY
4	84989772	1	SUPPORT, , FOR CX720, CX740, CX760, CX780 ONLY
5	84072953	1	PROFILE,
6	84072954	1	SUPPORT, LH
7	401502	AR	STRIP, ANTI-SKID, 51mm x 18.3 Roll - Cut to Size
8	84071282	1	COVER, , FOR CX820, CX840, CX860, CX880 ONLY
8	84073950	1	COVER, , FOR CX720, CX740, CX760, CX780 ONLY
9	84072949	1	SUPPORT,
10	86629541	17	BOLT, Hex, M12 x 40, 8.8, Full Thd,
11	140046	45	WASHER, Belleville, M12,
12	16043224	AR	BOLT, Hex, M8 x 16, 8.8, Full Thd,
13	412650	AR	WASHER, Belleville, M8,
14	100016	16	NUT, M10, Cl 8,
15	394629	16	WASHER, LOCK, 10MM
16	43140	8	BOLT, Hex, M10 x 30, 8.8, Full Thd,
17	84073928	1	FRAME,
18	84073929	1	FRAME,
19	84073930	6	SHIM,
20	84073777	6	BUSHING,
21	394631	10	WASHER, 16MM
22	120093	6	BOLT, Hex, M16 x 80, 8.8,
23	84100383	1	SUPPORT, , FOR CX820, CX840, CX860, CX880 ONLY, BSN C511
23	84076772	1	SUPPORT, , FOR CX820, CX840, CX860, CX880 ONLY, ASN D512
23	84100384	1	SUPPORT, , FOR CX720, CX740, CX760, CX780 ONLY, BSN C511
23	84432212	1	SUPPORT, , FOR CX720, CX740, CX760, CX780 ONLY, ASN D512
24	43139	8	SCREW, Hex, M10 x 25, 8.8, Full Thd, M10x25
25	140042	8	WASHER, M10 x 34 x 3,
26	140045	8	WASHER, SPRING, Belleville, M10,
27	120251	2	BOLT, Hex, M16 x 170, 8.8,
28	333040	4	WASHER,
29	300388	14	SCREW, Hex, M12 x 25, 8.8,
29	9706687	1	SCREW, Hex, M12 x 30, 8.8,
30	9706685	13	NUT, M12, Cl 8,
31	140085	13	WASHER,
32	325594	4	WASHER,
33	84077162	1	SUPPORT,
34	84434163	1	SUPPORT, RH, FOR CX820, CX840, CX860, CX880 ONLY
34	84989992	1	SUPPORT, RH, FOR CX720, CX740, CX760, CX780 ONLY
35	84057311	2	SLEEVE,
36	84077268	1	SUPPORT,
37	321204	1	NIPPLE, LUBE, M6 x 1, 16mm lg,

ссылка	Номер детали	Кол-во	Описание
38	84442011	1	SHIM,

12.04(01) LOWER AND PIVOTING FRAME, SELF LEVELLING

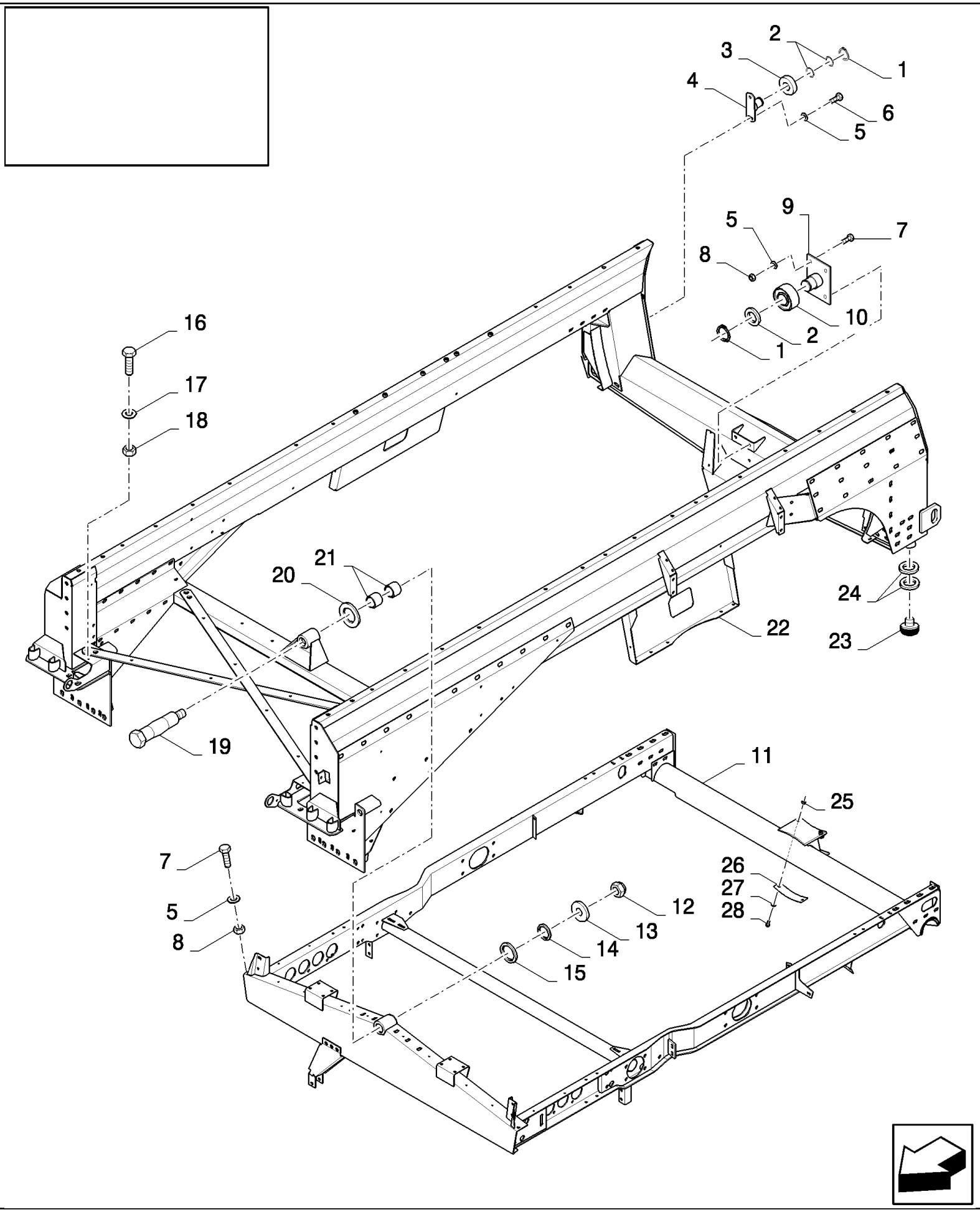

CX880 COMBINE - BASE UNIT (2/01-)

12.04(01) LOWER AND PIVOTING FRAME, SELF LEVELLING

ссылка	Номер детали	Кол-во	Описание
1	370006	3	RING, SNAP,
2	442203	6	WASHER,
3	434817	2	ROLLER,
4	9504221	2	HINGE, , BSN C323
4	84818451	2	HINGE, , ASN D324
5	140045	AR	WASHER, SPRING, Belleville, M10,
6	43139	4	SCREW, Hex, M10 x 25, 8.8, Full Thd, M10x25
7	43140	AR	BOLT, Hex, M10 x 30, 8.8, Full Thd,
8	100016	4	NUT, M10, Cl 8,
9	434814	1	HINGE,
10	210049	1	BEARING ASSY,
11	84071480	1	FRAME, , FOR CX820, CX840, CX860, CX880 ONLY, BSN C479
11	84453821	1	FRAME ASSY, , FOR CX820, CX840, CX860, CX880 ONLY, ASN D480
11	84071419	1	FRAME, , FOR CX720, CX740, CX760, CX780 ONLY, BSN C479
11	84453822	1	FRAME ASSY, , FOR CX720, CX740, CX760, CX780 ONLY, ASN D480
12	86000441	1	NUT, M16 x 2, Cl 8,
13	84007183	1	WASHER,
14	9513615	1	WASHER,
15	9508900	1	WASHER,
16	43168	4	BOLT, Hex, M16 x 40, 8.8,
17	394631	8	WASHER, 16MM
18	100020	4	NUT, M16, Cl 8,
19	9831928	1	SHAFT,
20	140061	1	WASHER,
21	429232	2	SLEEVE,
22	84072198	1	FRAME, , FOR CX820, CX840, CX860, CX880 ONLY
22	84072263	1	FRAME, , FOR CX720, CX740, CX760, CX780 ONLY
23	190029	2	INSULATOR BLOCK,
24	9801096	4	WASHER,
25	80100037	2	NUT, M10 x 1.5, Cl 8, , ASN D480
26	84457842	1	PLATE, WEAR, , ASN D480
27	80140045	2	WASHER, , ASN D480
28	80043140	2	BOLT, Hex, M10 x 30, 8.8, M10x30, ASN D480

12.05(01) LOWER FRAME, FIXED SHOE

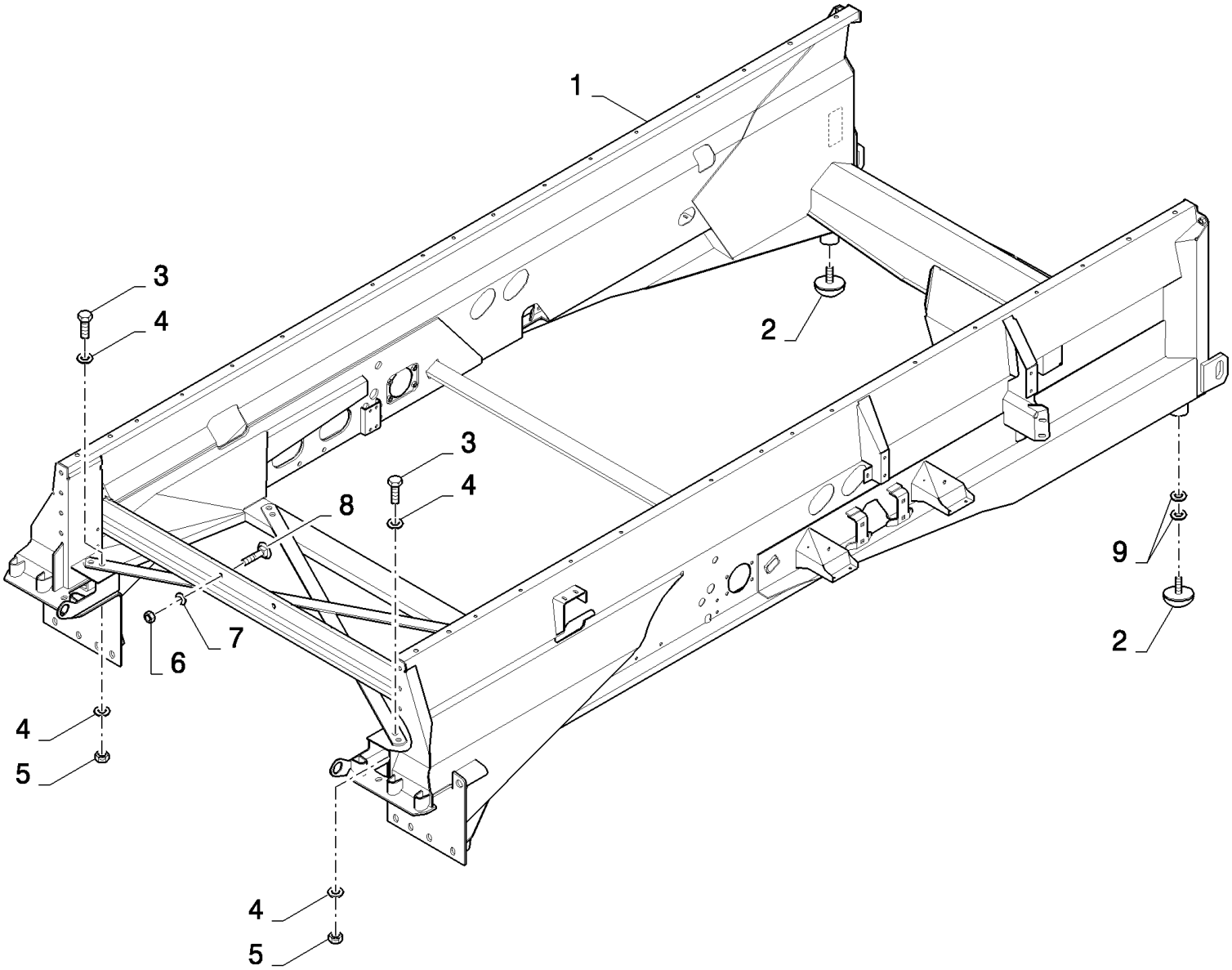

CX880 COMBINE - BASE UNIT (2/01-)

12.05(01) LOWER FRAME, FIXED SHOE

ссылка	Номер детали	Кол-во	Описание
1	84076242	1	FRAME, , FOR CX820, CX840, CX860, CX880 ONLY
1	84076243	1	FRAME, , FOR CX720, CX740, CX760, CX780 ONLY
2	190029	2	INSULATOR BLOCK,
3	43168	4	BOLT, Hex, M16 x 40, 8.8,
4	394631	8	WASHER, 16MM
5	100020	4	NUT, M16, Cl 8,
6	89706690	2	NUT, M8, Cl 8,
7	322358	2	WASHER, SPRING, Belleville, M8,
8	86507486	2	BOLT, CARRIAGE, Short NK, M8 x 20, Cl8.8, Full Thd,
9	9801096	4	WASHER,

12.06(01) HITCH

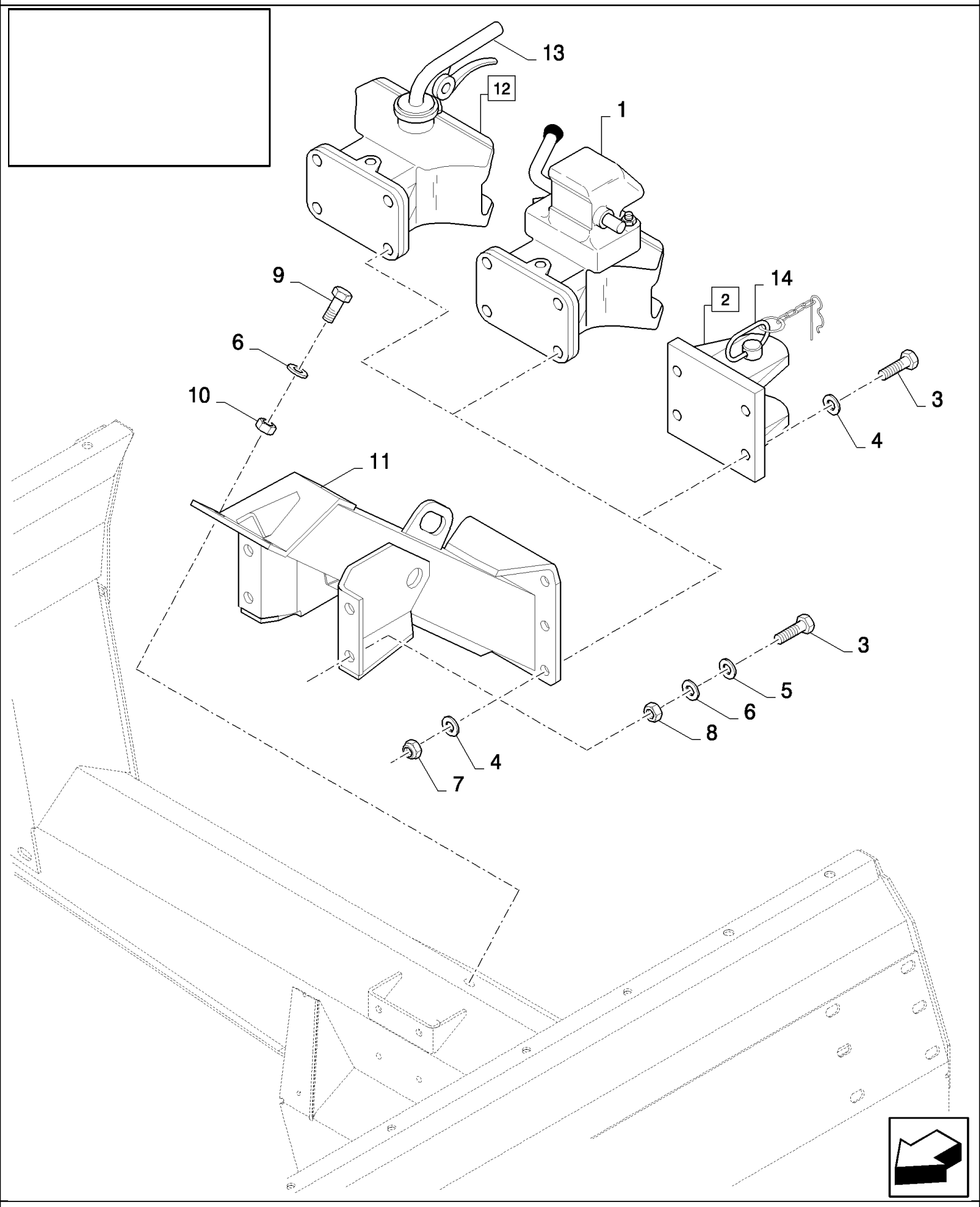

CX880 COMBINE - BASE UNIT (2/01-)

12.06(01) HITCH

ссылка	Номер детали	Кол-во	Описание
1	84400986	1	HITCH,
2	84400985	1	HITCH, (14)
3	120091	8	BOLT, Hex, M16 x 60, 8.8,
4	84434607	8	WASHER,
5	140020	4	WASHER, M16 x 30 x 3,
6	140048	6	WASHER, SPRING, Belleville, M16,
7	86000441	4	NUT, M16 x 2, Cl 8,
8	100020	4	NUT, M16, Cl 8,
9	43168	2	BOLT, Hex, M16 x 40, 8.8,
10	378246	2	WASHER, 16MM
11	84431937	1	SUPPORT, , BSN C309
11	84446037	1	SUPPORT, , ASN D310
12	84607012	1	TOW HOOK, (13)
13	84817652	1	PIN, HITCH,
13	84801725	1	PIN, HITCH,
14	84817651	1	PIN, HITCH,

12.07(01) COUNTERWEIGHTS, SUPPORT

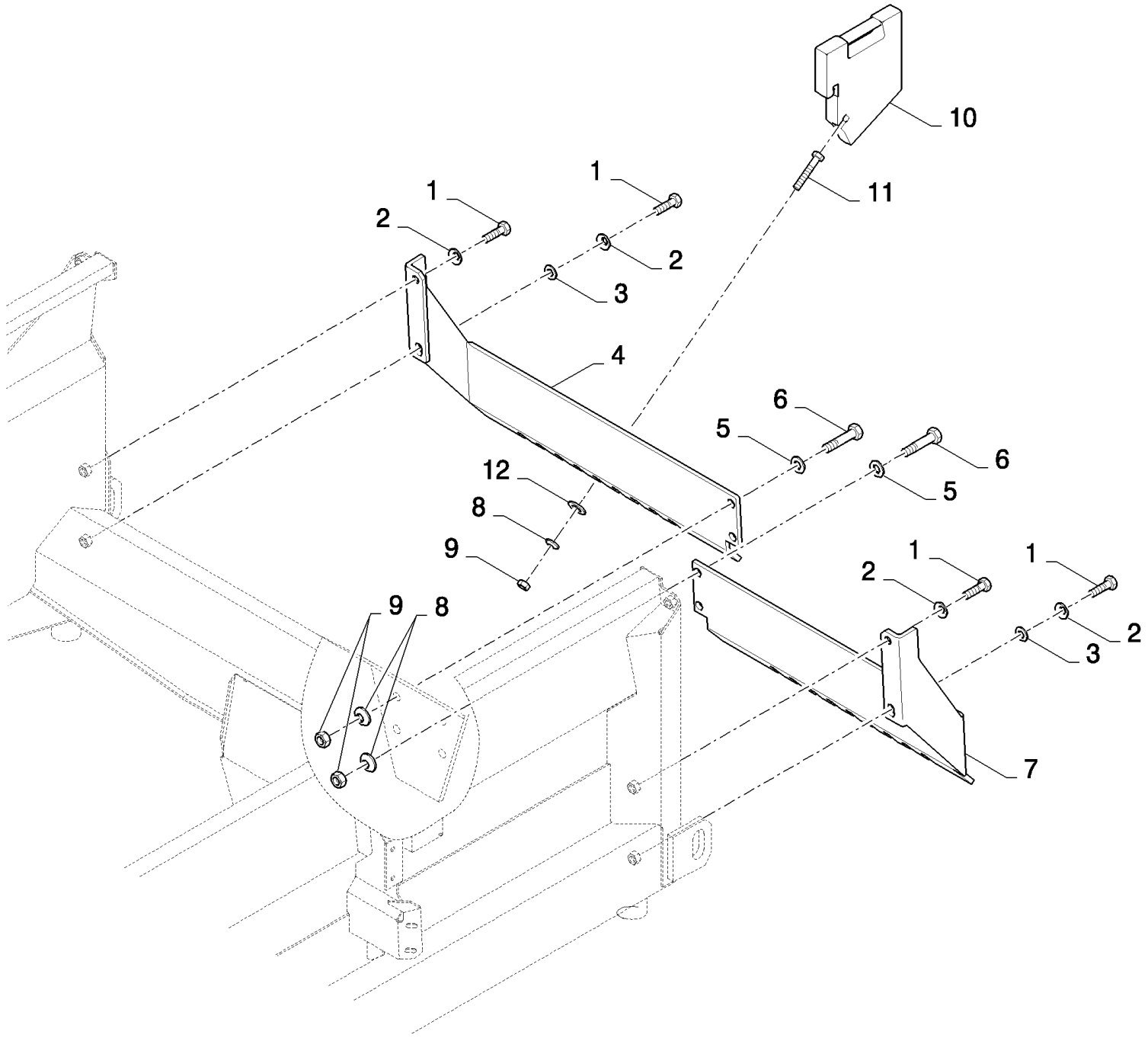

CX880 COMBINE - BASE UNIT (2/01-)

12.07(01) COUNTERWEIGHTS, SUPPORT

ссылка	Номер детали	Кол-во	Описание
1	9706687	4	SCREW, Hex, M12 x 30, 8.8,
2	140046	4	WASHER, Belleville, M12,
3	543043	2	WASHER,
4	84431460	1	SUPPORT, , FOR CX820, CX840, CX860, CX880 ONLY
4	84431528	1	SUPPORT, , FOR CX720, CX740, CX760, CX780 ONLY
5	378246	4	WASHER, 16MM
6	385923	4	SCREW, Hex, M16 x 55, 8.8, Full Thd, Hex, M16 x 55, 8.8, Full Thd
7	84431405	1	SUPPORT, , FOR CX820, CX840, CX860, CX880 ONLY
7	84431545	1	SUPPORT, , FOR CX720, CX740, CX760, CX780 ONLY
8	140048	AR	WASHER, SPRING, Belleville, M16,
9	100020	AR	NUT, M16, Cl 8,
10	84435924	AR	WEIGHT, ADVANCE DEVICE, 35KG
11	120092	AR	SCREW, Hex, M16 x 70, 8.8,
12	451743	AR	WASHER,

STRAW ELEVATOR	**ELEVATEUR DE PAILLE**	**ELEVADOR DE PAJA**	**HALMELEVATOR**
CANALE ELEVATORE PAGLIA	**STROHFÖRDERER**	**ELEVADOR DE PALHA**	**STRO-ELEVATOR**

SEC. 13

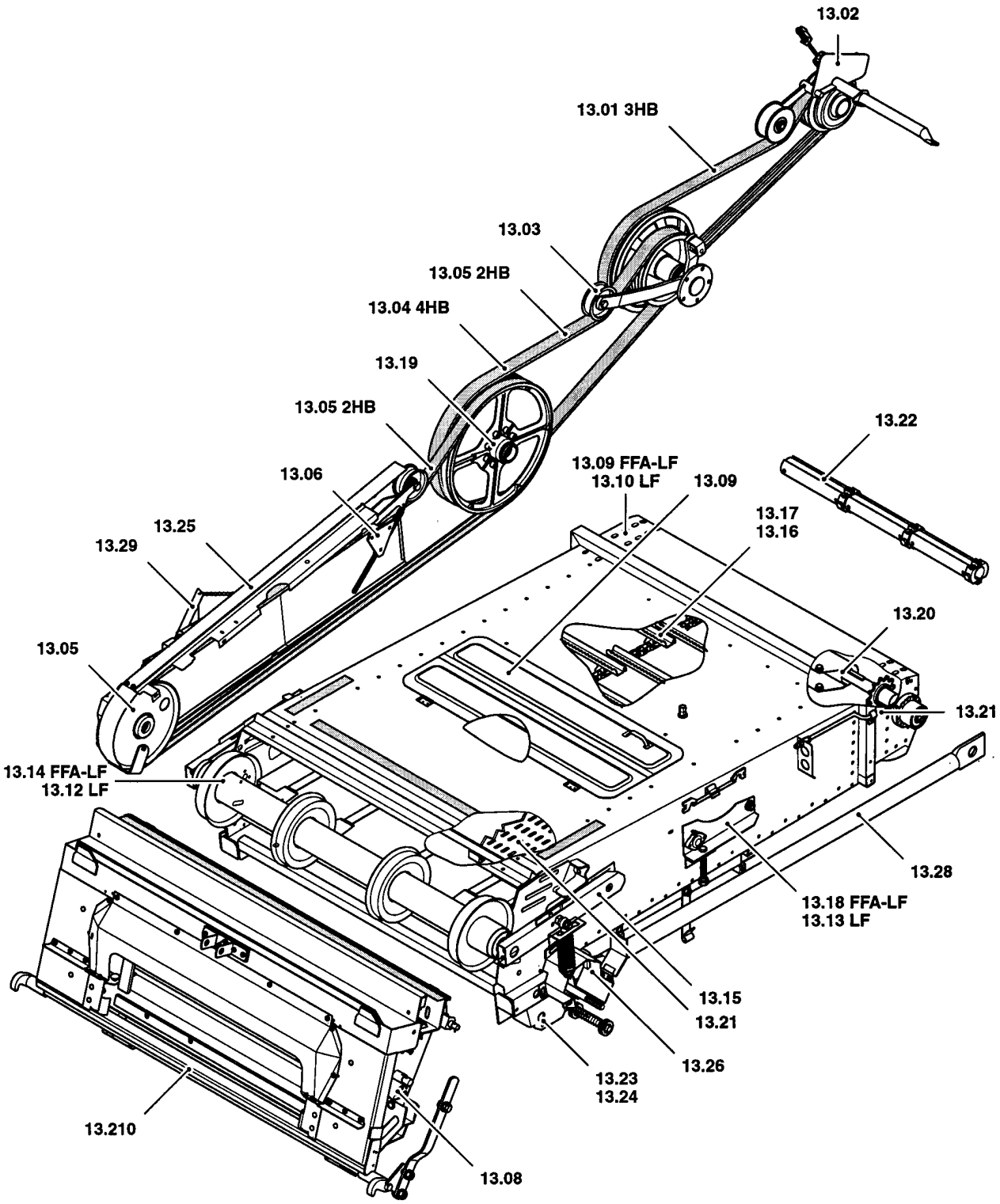

ссылка	Номер детали	Кол-во	Описание

13.01(01) HEADER, DRIVE 3HB

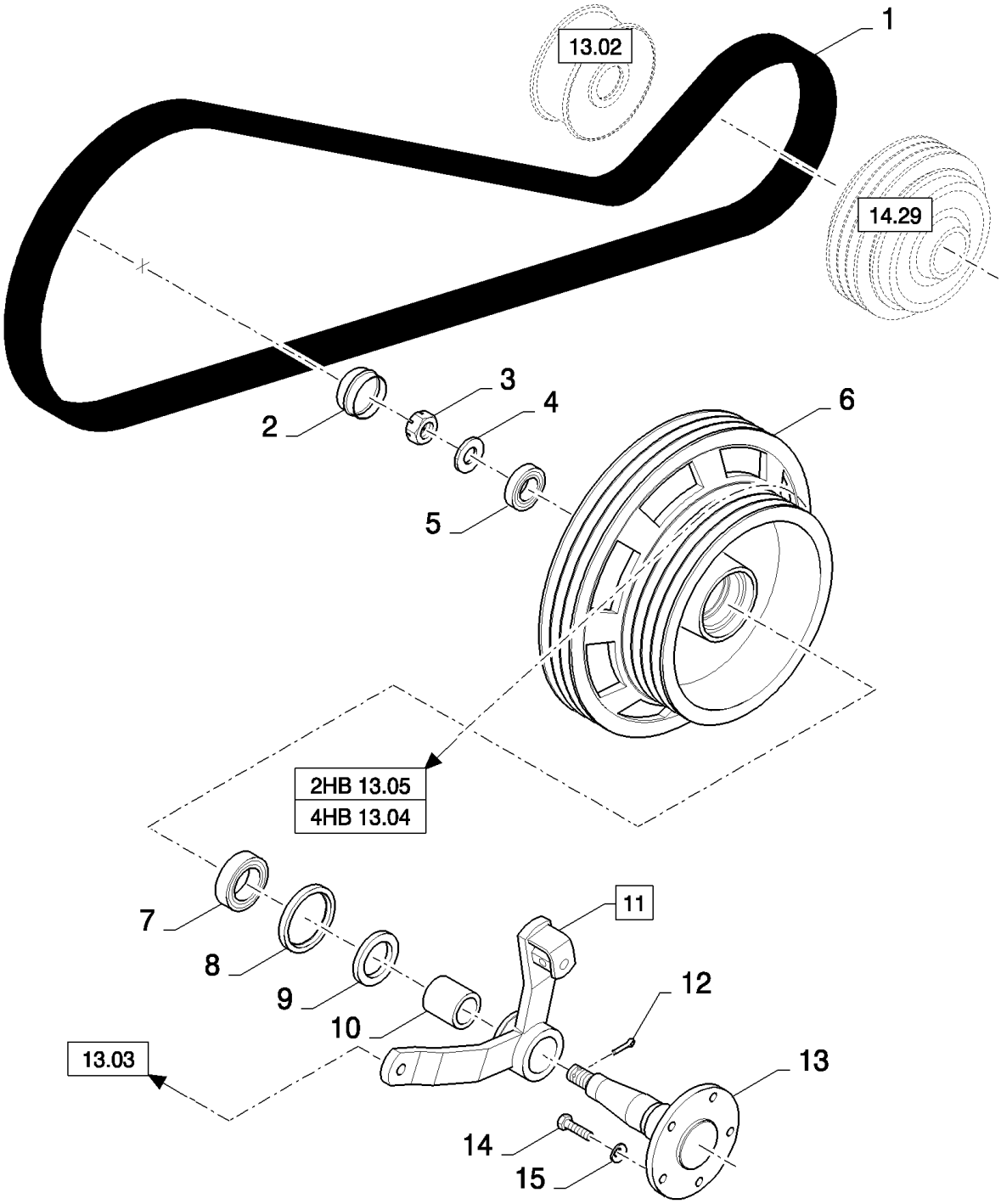

CX880 COMBINE - BASE UNIT (2/01-)

13.01(01) HEADER, DRIVE 3HB

ссылка	Номер детали	Кол-во	Описание
1	84061279	1	BELT,
2	445397	1	COVER,
3	309090	1	NUT, SLOTTED, M24 x 1.5, Cl 8,
4	304060	1	WASHER,
5	321207	1	BEARING, ROLLER,
6	84072371	1	PULLEY,
7	357239	1	BEARING ASSY,
8	375400	1	ELEMENT, SEALING,
9	84061714	1	RING,
10	84061838	1	SPACER,
11	84073724	1	LEVER, (10)
12	130012	1	PIN, SPLIT (COTTER), M5 x 50,
13	84061747	1	COUNTERSHAFT,
14	86629541	5	BOLT, Hex, M12 x 40, 8.8, Full Thd,
15	140046	5	WASHER, Belleville, M12,

13.02(01) HEADER DRIVE 3HB, IDLER

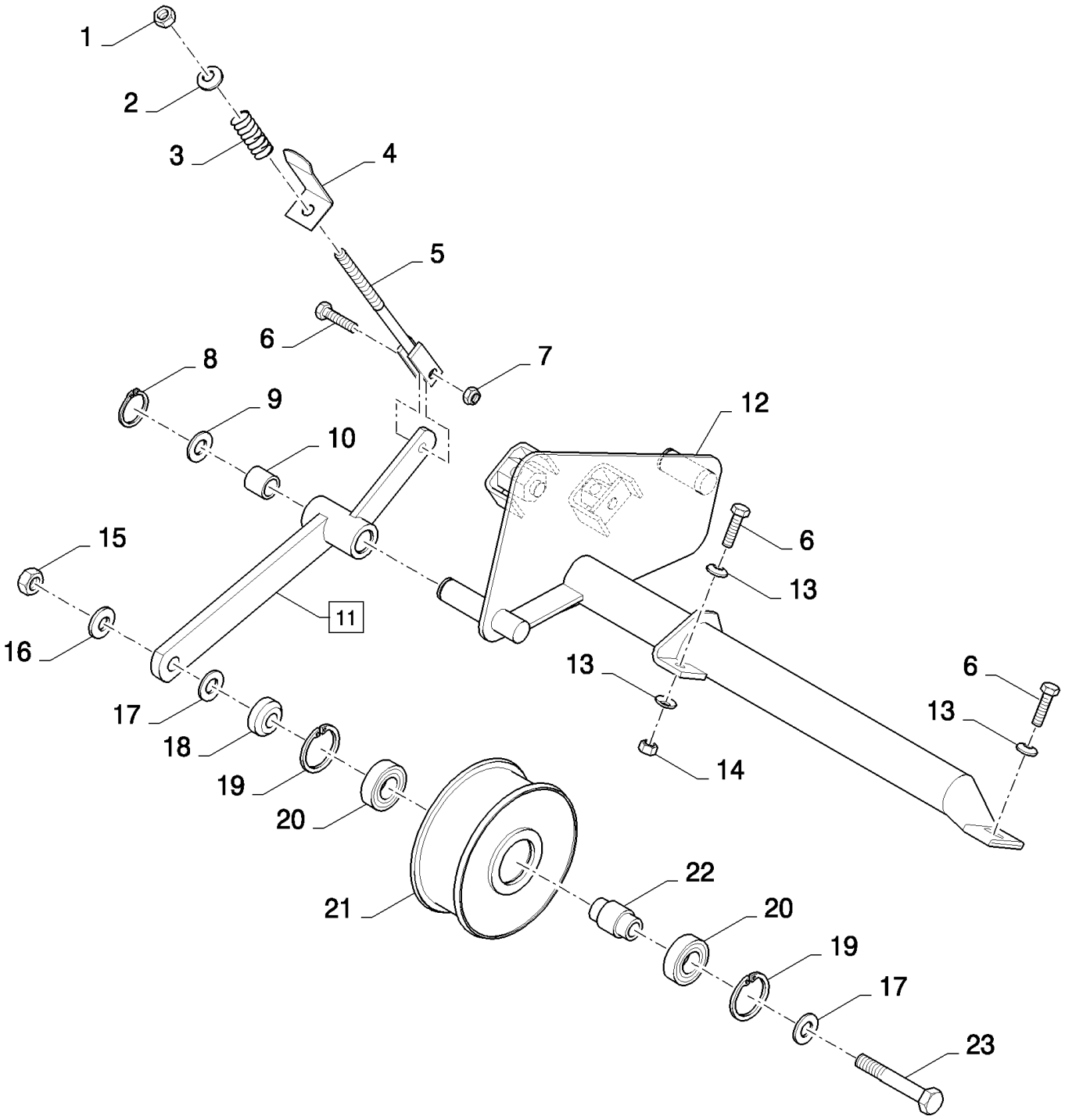

CX880 COMBINE - BASE UNIT (2/01-)

13.02(01) HEADER DRIVE 3HB, IDLER

ссылка	Номер детали	Кол-во	Описание
1	412126	1	NUT, LOCK, M12 x 1.75, Cl 8,
2	378245	1	WASHER, M12,
3	180091	1	SPRING,
4	9850486	1	INDICATOR,
5	455412	1	ROD, ADJUSTMENT,
6	43140	4	BOLT, Hex, M10 x 30, 8.8, Full Thd,
7	100037	1	NUT, M10 x 1.5, Cl 8,
8	370002	1	RING, SNAP, M25, Ext,
9	140103	1	WASHER,
10	84057311	2	SLEEVE,
11	84072956	1	LEVER, (10)
12	84072955	1	SUPPORT,
13	140045	5	WASHER, SPRING, Belleville, M10,
14	100016	2	NUT, M10, Cl 8,
15	100020	1	NUT, M16, Cl 8,
16	140048	1	WASHER, SPRING, Belleville, M16,
17	378246	2	WASHER, 16MM
18	750169	1	BUSHING,
19	370011	2	RING, SNAP, M52, Int,
20	84057966	2	BEARING, BALL,
21	84072441	1	IDLER,
22	84057817	1	BUSHING,
23	43874	1	SCREW, Hex, M16 x 110, 8.8,

13.03(01) STRAW ELEVATOR DRIVE 2HB - 4HB, IDLERS

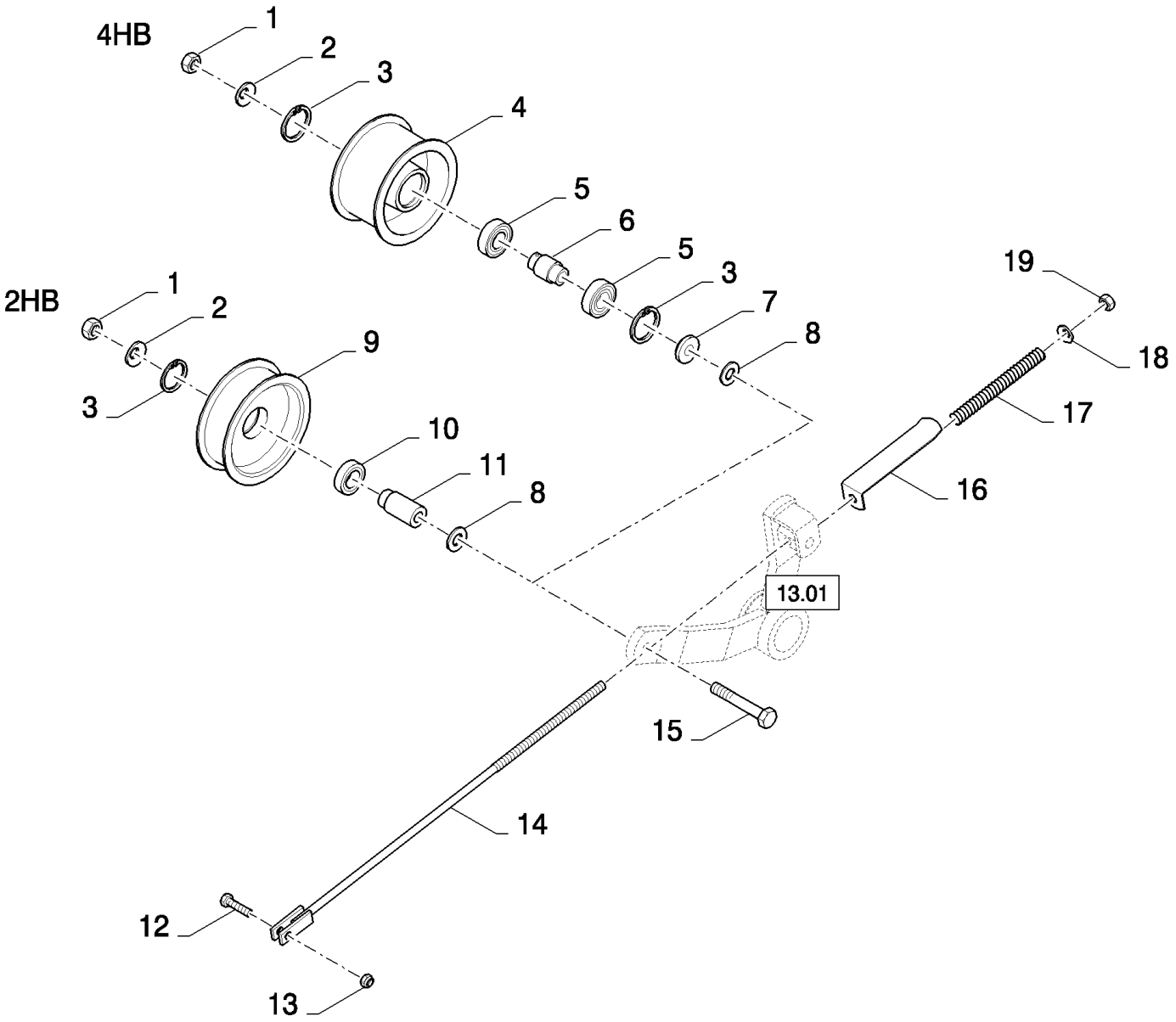

CX880 COMBINE - BASE UNIT (2/01-)

13.03(01) STRAW ELEVATOR DRIVE 2HB - 4HB, IDLERS

ссылка	Номер детали	Кол-во	Описание
1	100020	1	NUT, M16, Cl 8,
2	140048	1	WASHER, SPRING, Belleville, M16,
3	370011	2	RING, SNAP, M52, Int,
4	84069861	1	WHEEL, IDLER, , FOR 4HB ONLY
5	84057966	2	BEARING, BALL, , FOR 4HB ONLY
6	84069869	1	SPACER, , FOR 4HB ONLY
7	84073740	1	BUSHING, , FOR 4HB ONLY
8	378246	AR	WASHER, 16MM
9	84071981	1	WHEEL, IDLER, , FOR 2HB ONLY
10	443898	1	BEARING, BALL, , FOR 2HB ONLY
11	84073734	1	SPACER, , FOR 2HB ONLY
12	43140	1	BOLT, Hex, M10 x 30, 8.8, Full Thd,
13	100037	1	NUT, M10 x 1.5, Cl 8,
14	84434303	1	TIE-ROD,
15	43874	1	SCREW, Hex, M16 x 110, 8.8,
16	84440555	1	INDICATOR, , FOR 2HB ONLY
16	84069793	1	INDICATOR, , FOR 4HB ONLY
17	354085	1	SPRING, , FOR 2HB ONLY
17	9516122	1	SPRING, , FOR 4HB ONLY
18	378245	1	WASHER, M12,
19	412126	1	NUT, LOCK, M12 x 1.75, Cl 8,

13.04(01) DRIVE STRAW ELEVATOR 4HB

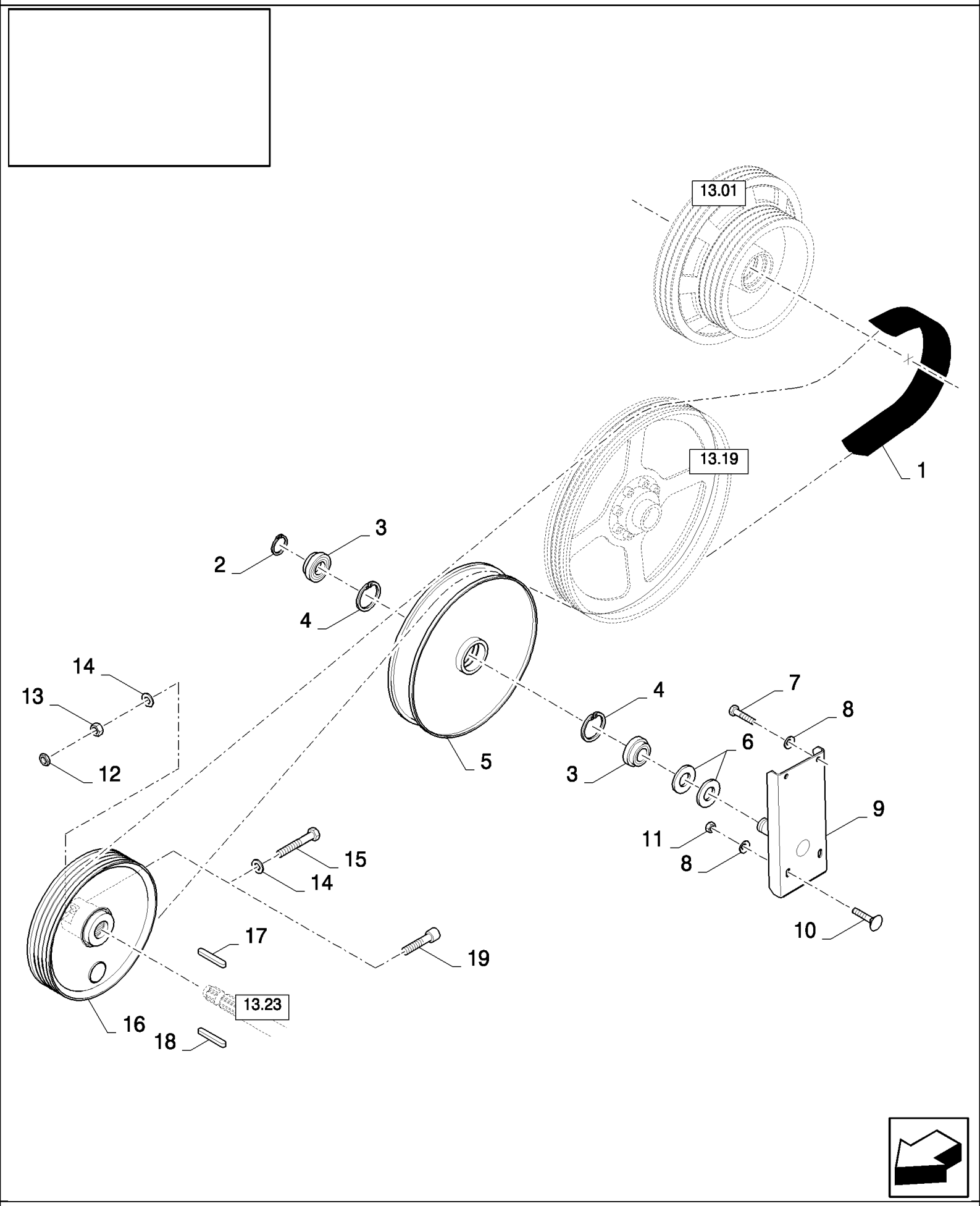

CX880 COMBINE - BASE UNIT (2/01-)

13.04(01) DRIVE STRAW ELEVATOR 4HB

ссылка	Номер детали	Кол-во	Описание
1	84334995	1	BELT, TRANSMISSION,
2	370006	1	RING, SNAP,
3	84045378	2	BEARING ASSY,
4	80300633	2	RING, SNAP,
5	84432946	1	PULLEY, , BSN C323
5	84433963	1	PULLEY, , ASN D324
6	442203	6	WASHER,
7	300388	2	SCREW, Hex, M12 x 25, 8.8,
8	140046	4	WASHER, Belleville, M12,
9	84071996	1	SUPPORT,
10	120044	2	BOLT, CARRIAGE, Short NK, M12 x 30, Cl8.8, Full Thd,
11	9706685	2	NUT, M12, Cl 8,
12	100095	1	NUT, Thin, M16 x 2, Cl 04, , BSN C305
13	100020	1	NUT, M16, Cl 8, , BSN C305
14	394631	2	WASHER, 16MM, BSN C305
15	120093	1	BOLT, Hex, M16 x 80, 8.8, , BSN C305
16	84071219	1	PULLEY, , BSN C305
16	84444533	1	PULLEY, , BSN F306439
16	84455199	1	PULLEY, , ASN D440
17	80412457	1	KEY, , ASN D440
18	80412341	1	KEY, , ASN D440
19	89819596	1	SCREW, M16x60, ASN D306

13.05(01) STRAW ELEVATOR DRIVE 2HB

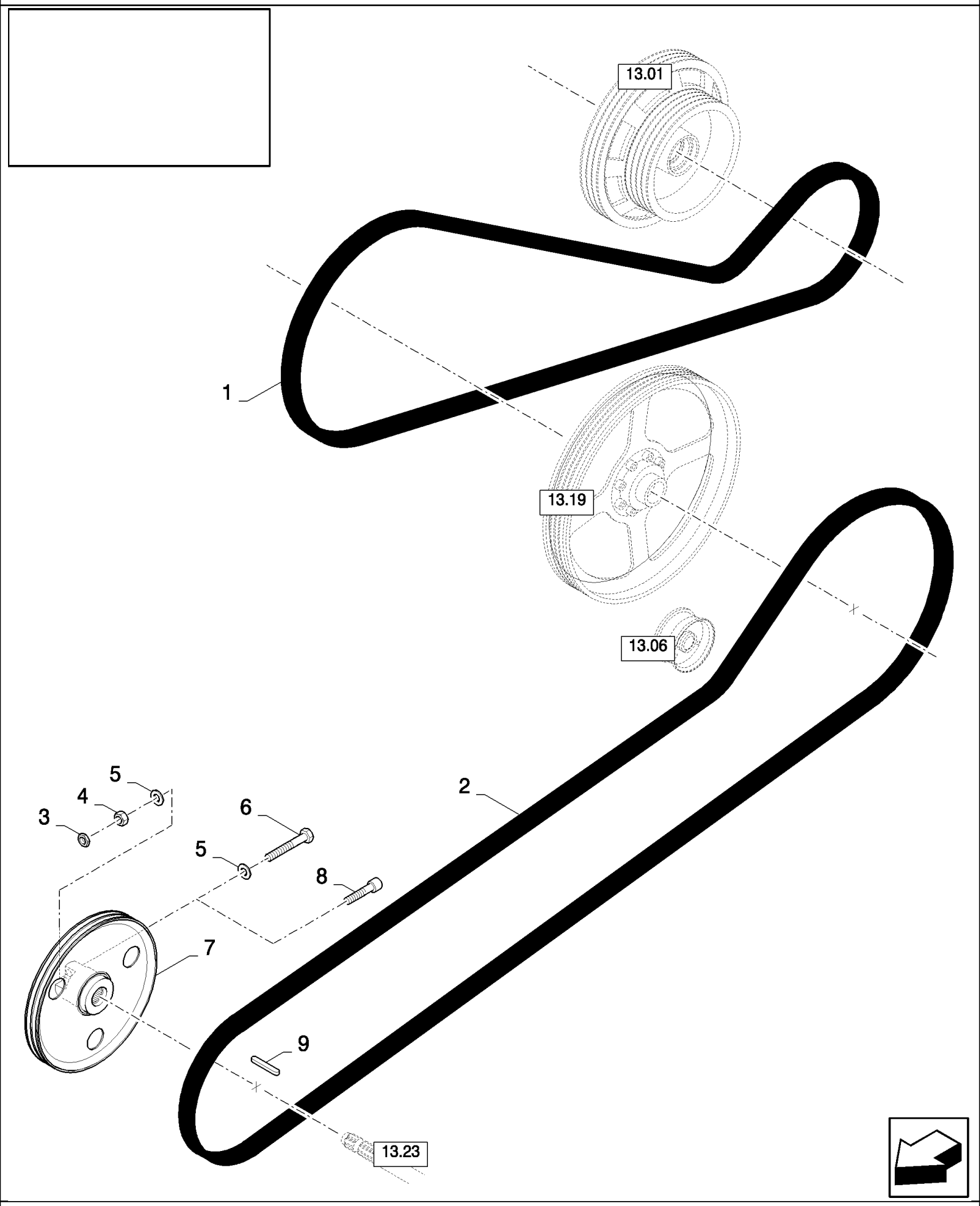

CX880 COMBINE - BASE UNIT (2/01-)

13.05(01) STRAW ELEVATOR DRIVE 2HB

ссылка	Номер детали	Кол-во	Описание
1	84434295	1	BELT, TRANSMISSION,
2	84434260	1	BELT, TRANSMISSION,
3	100095	1	NUT, Thin, M16 x 2, Cl 04, , BSN C305
4	100020	1	NUT, M16, Cl 8, , BSN C305
5	394631	2	WASHER, 16MM, BSN C305
6	120093	1	BOLT, Hex, M16 x 80, 8.8, , BSN C305
6	9819596	1	SCREW, M16x60, ASN D306
7	84071867	1	PULLEY, , BSN C305
7	84444487	1	PULLEY, , BSN F306481
7	84460120	1	PULLEY, , ASN D482
8	89819596	1	SCREW, M16x60
9	80170016	1	KEY, , ASN D482

13.06(01) STRAW ELEVATOR DRIVE 2HB, GUIDE AND IDLER

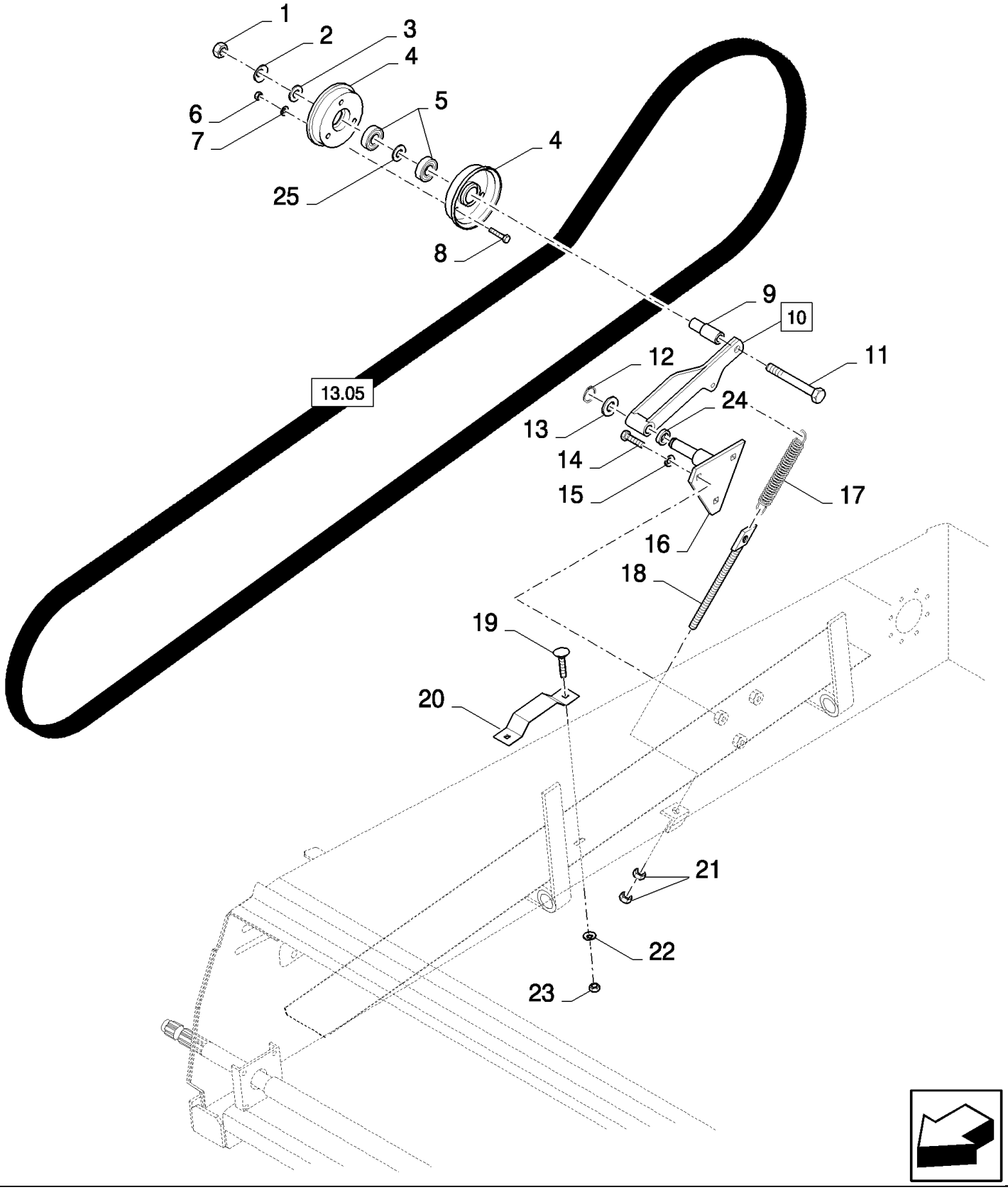

CX880 COMBINE - BASE UNIT (2/01-)

13.06(01) STRAW ELEVATOR DRIVE 2HB, GUIDE AND IDLER

ссылка	Номер детали	Кол-во	Описание
1	100020	1	NUT, M16, Cl 8,
2	140048	1	WASHER, SPRING, Belleville, M16,
3	378246	1	WASHER, 16MM
4	290122	2	HALF-PULLEY,
5	443898	2	BEARING, BALL,
6	15896221	3	NUT, M6, Cl 10,
7	322357	3	WASHER, SPRING, Belleville, M6,
8	86508568	3	SCREW, Hex, M6 x 16, 8.8,
9	9514888	1	RING,
10	84989672	1	ARM, (24)
11	374889	1	BOLT, Hex, M16 x 100, 8.8,
12	370024	1	RING, SNAP, M20, Ext,
13	9820493	1	WASHER,
14	43140	3	BOLT, Hex, M10 x 30, 8.8, Full Thd,
15	140045	3	WASHER, SPRING, Belleville, M10,
16	84019476	1	SUPPORT,
17	84434263	1	SPRING,
18	920051	1	ROD,
19	86507486	1	BOLT, CARRIAGE, Short NK, M8 x 20, Cl8.8, Full Thd,
20	84071257	1	GUIDE,
21	9706685	2	NUT, M12, Cl 8,
22	322358	1	WASHER, SPRING, Belleville, M8,
23	89706690	1	NUT, M8, Cl 8,
24	382974	2	BUSHING,
25	419854	1	WASHER,

13.07(01) BALANCE FRAME STRAW ELEVATOR

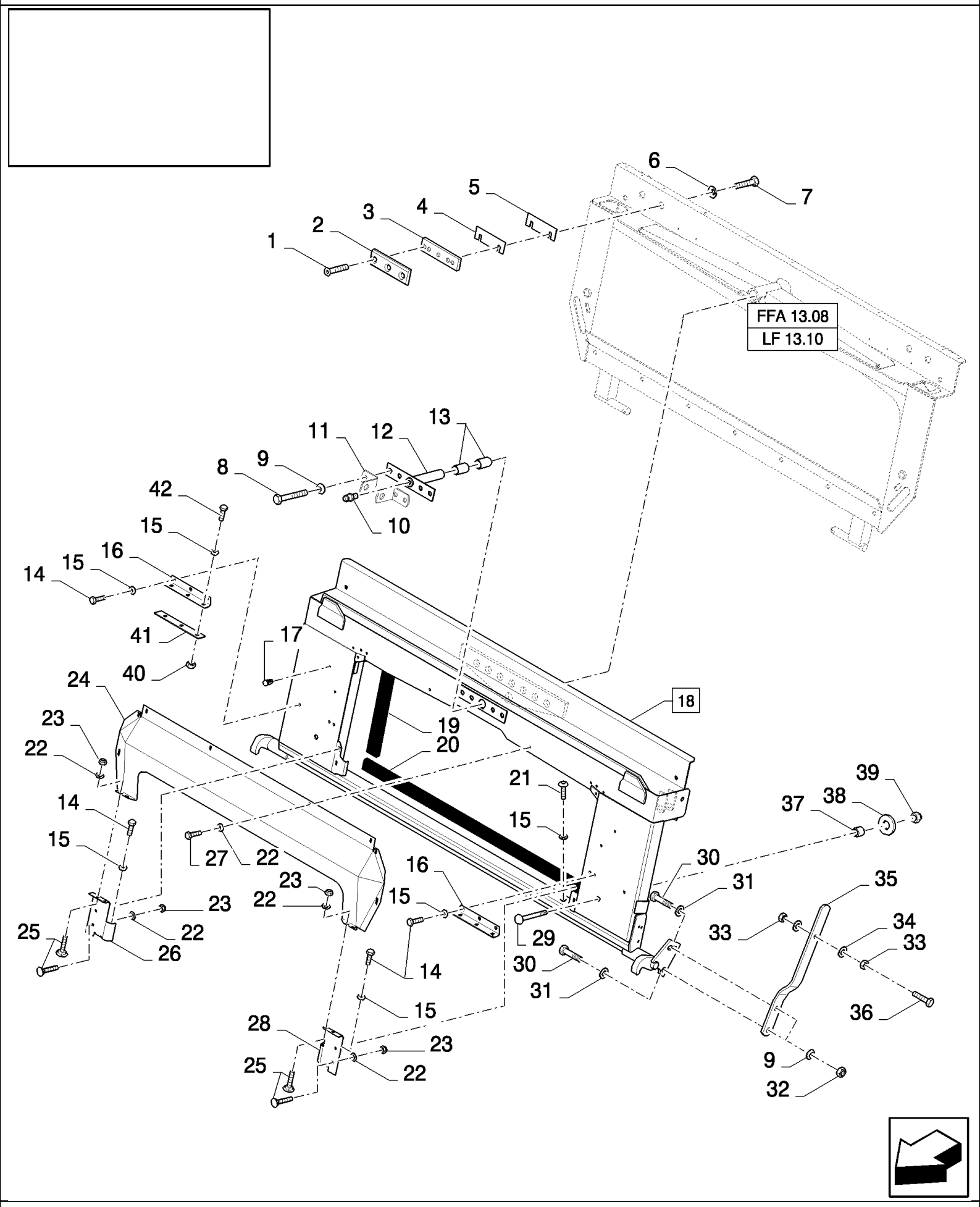

CX880 COMBINE - BASE UNIT (2/01-)

13.07(01) BALANCE FRAME STRAW ELEVATOR

ссылка	Номер детали	Кол-во	Описание
1	393698	6	SCREW, Hex Soc Flat Hd, M10 x 25, 8.8, M10x25
2	84045488	2	SEAL PROTECTION,
3	84989344	2	PLATE,
4	84989342	2	PLATE, ADJUSTING,
5	84989343	2	PLATE, ADJUSTING,
6	140045	4	WASHER, SPRING, Belleville, M10,
7	43139	4	SCREW, Hex, M10 x 25, 8.8, Full Thd, M10x25
8	385922	AR	SCREW, Hex, M16 x 45, 8.8,
9	140048	AR	WASHER, SPRING, Belleville, M16,
10	321204	1	NIPPLE, LUBE, M6 x 1, 16mm lg,
11	84004951	2	BRACKET, , BSN C245
12	9850040	1	PIN, , BSN C245
12	84439449	1	PIN, , ASN D246
13	412365	2	SLEEVE,
14	120104	AR	SCREW, Hex, M8 x 20, 8.8,
15	322358	AR	WASHER, SPRING, Belleville, M8,
16	9593081	2	ANGLE, , FOR CX820, CX840, CX860, CX880 ONLY, BSN C245
16	84439654	2	ANGLE, , FOR CX820, CX840, CX860, CX880 ONLY, ASN D246
16	84069753	2	ANGLE, , FOR CX720, CX740, CX760, CX780 ONLY
17	84989132	10	CLIP,
18	84334953	1	FRAME, (19,20), FOR CX820, CX840, CX860, CX880 ONLY
18	84334954	1	FRAME, (19,20), FOR CX720, CX740, CX760, CX780 ONLY
19	84989266	2	SEAL PROTECTION,
20	84069239	1	SEAL PROTECTION, , FOR CX820, CX840, CX860, CX880 ONLY
20	84057531	1	SEAL PROTECTION, , FOR CX720, CX740, CX760, CX780 ONLY
21	86512788	2	SCREW, M8x30
22	412649	16	WASHER, SPRING, Belleville, M6,
23	353308	8	NUT, M6 x 1, Cl 8,
24	84071457	1	PLATE, , FOR CX820, CX840, CX860, CX880 ONLY
24	84071456	1	PLATE, , FOR CX720, CX740, CX760, CX780 ONLY
25	86512439	8	SCREW, Short NK, M6 x 16, Cl8.8, Full Thd,
26	9500851	1	PLATE, SKID, RH
26	84002960	1	COVER, RH, FOR RICE ONLY, WITH LF
26	84002974	1	COVER, RH, FOR RICE ONLY, FOR CX720, CX740, CX760, CX780 ONLY, WITHOUT LF
27	120100	8	BOLT, Hex, M6 x 20, 8.8,
28	9500852	1	PLATE, SKID, LH
28	84002961	1	COVER, LH, FOR RICE ONLY, WITH LF
28	84002973	1	COVER, LH, FOR RICE ONLY, FOR CX720, CX740, CX760, CX780 ONLY, WITHOUT LF
29	300663	2	BOLT, CARRIAGE, Short NK, M16 x 120, Cl8.8, M16x120
30	43168	2	BOLT, Hex, M16 x 40, 8.8,
31	378246	2	WASHER, 16MM
32	100020	2	NUT, M16, Cl 8,
33	323238	2	NUT, Thin, M12 x 1.75, Cl 05, M12
34	140046	2	WASHER, Belleville, M12,

13.07(01) BALANCE FRAME STRAW ELEVATOR

ссылка	Номер детали	Кол-во	Описание
35	84069821	1	LEVER, , BSN C273
35	84442476	1	LEVER, , BSN F274359
35	84442476	1	LEVER, , WITHOUT LF/FFA, ASN D360
35	87025578	1	LEVER, , WITH LF/FFA, ASN D360
36	86629541	1	BOLT, Hex, M12 x 40, 8.8, Full Thd,
37	84071496	2	SPACER,
38	913347	2	WASHER,
39	412066	2	NUT, LOCK, M16 x 2, Cl 8,
40	86507486	4	BOLT, CARRIAGE, Short NK, M8 x 20, Cl8.8, Full Thd,
41	84437508	2	PLATE, , FOR CX820, CX840, CX860, CX880 ONLY
41	84437512	2	PLATE, , FOR CX720, CX740, CX760, CX780 ONLY
42	89706690	4	NUT, M8, Cl 8,

13.08(01) CONNECTING FRAME FOR BALANCE FRAME WITH FRONT FACE ADJUSTMENT

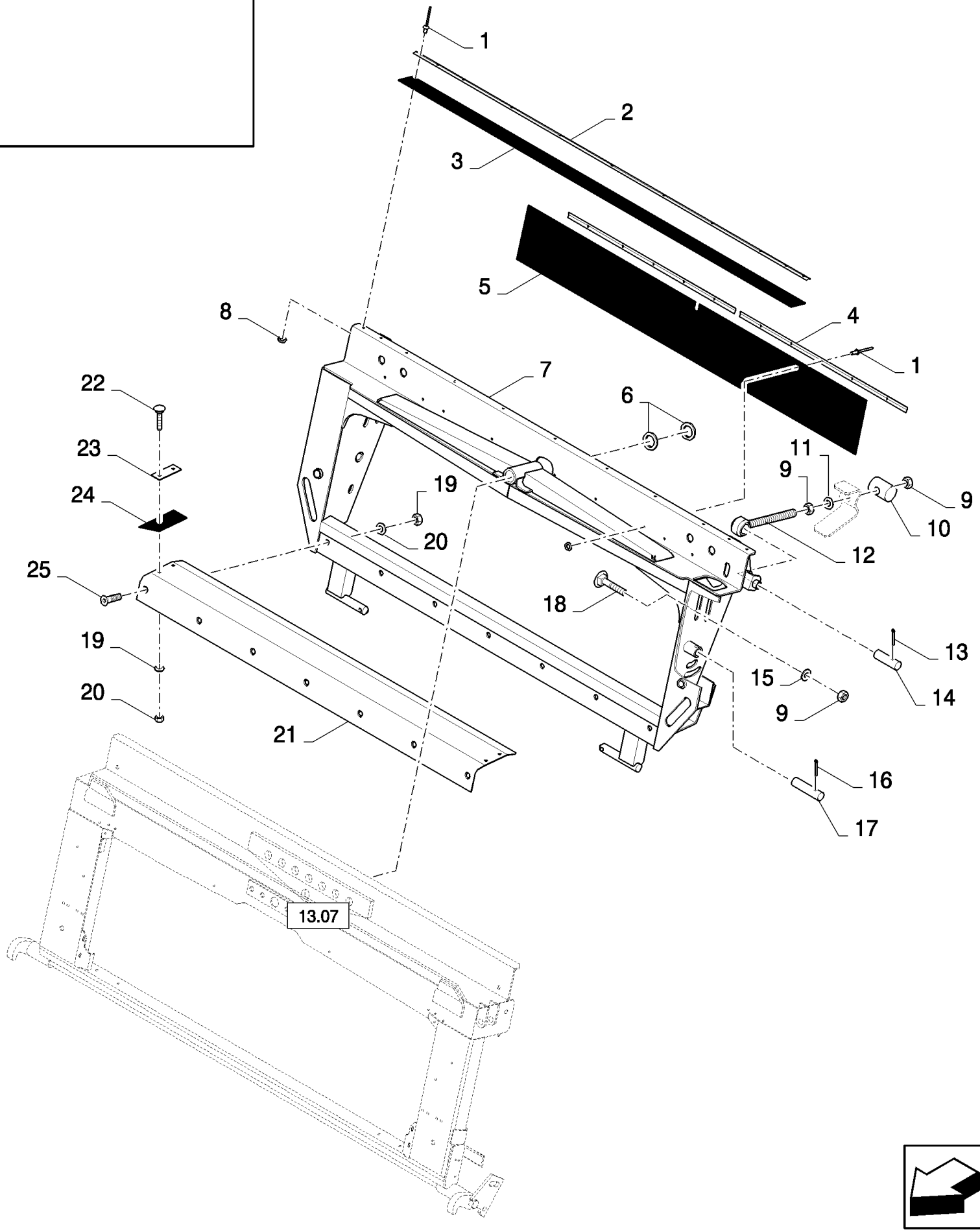

CX880 COMBINE - BASE UNIT (2/01-)

13.08(01) CONNECTING FRAME FOR BALANCE FRAME WITH FRONT FACE ADJUSTMENT

ссылка	Номер детали	Кол-во	Описание
1	NS	AR	NOT SERVICED,
2	84071233	1	PLATE, FIXING, , FOR CX820, CX840, CX860, CX880 ONLY
2	89593163	1	PLATE, FIXING, , FOR CX720, CX740, CX760, CX780 ONLY
3	84061508	1	CANVAS, , FOR CX820, CX840, CX860, CX880 ONLY, BSN C301
3	84443712	1	CANVAS, , FOR CX820, CX840, CX860, CX880 ONLY, ASN D302
3	84069272	1	CANVAS, , FOR CX720, CX740, CX760, CX780 ONLY, BSN C301
3	84442672	1	CANVAS, , FOR CX720, CX740, CX760, CX780 ONLY, ASN D302
4	84072732	2	PLATE, FIXING, , FOR CX820, CX840, CX860, CX880 ONLY
4	84073157	2	PLATE, FIXING, , FOR CX720, CX740, CX760, CX780 ONLY
5	84072188	1	CANVAS, , FOR CX820, CX840, CX860, CX880 ONLY
5	84069268	1	CANVAS, , FOR CX720, CX740, CX760, CX780 ONLY
6	84018313	2	WASHER,
7	84073017	1	FRAME, , FOR CX820, CX840, CX860, CX880 ONLY
7	84073018	1	FRAME, , FOR CX720, CX740, CX760, CX780 ONLY
8	9824326	AR	WASHER, M5, 5MM
9	100020	22	NUT, M16, Cl 8,
9	100020	4	NUT, M16, Cl 8, , BSN C427
9	392530	18	NUT, M16, Cl 10, , ASN D428
10	9500556	2	SHAFT,
11	333040	2	WASHER,
12	84077745	2	EYEBOLT,
13	130011	2	PIN, SPLIT (COTTER), M5 x 40,
14	9500537	2	PIN,
15	86589278	18	WASHER, SPRING,
16	130016	2	PIN, SPLIT (COTTER), M6.3 x 63,
17	84072933	2	PIN,
18	412185	18	BOLT, CARRIAGE, Short NK, M16 x 50, Cl8.8, Full Thd, , BSN C427
18	84441255	18	BOLT, , ASN D428
19	322358	AR	WASHER, SPRING, Belleville, M8,
20	86629542	AR	NUT, LOCK, M8 x 1.25, Cl 8,
21	84073025	1	PLATE, , FOR CX820, CX840, CX860, CX880 ONLY, BSN C359
21	84447086	1	PLATE, , FOR CX820, CX840, CX860, CX880 ONLY, ASN D360
21	84073155	1	PLATE, , FOR CX720, CX740, CX760, CX780 ONLY, BSN C359
21	84447122	1	PLATE, , FOR CX720, CX740, CX760, CX780 ONLY, ASN D360
22	86507486	4	BOLT, CARRIAGE, Short NK, M8 x 20, Cl8.8, Full Thd,
23	9500511	2	PLATE,
24	9500510	2	CANVAS,
25	300498	AR	SCREW, Hex Soc Flat Hd, M8 x 25, 10.9,

13.09(01) STRAW ELEVATOR WITH FRONT FACE ADJUSTMENT

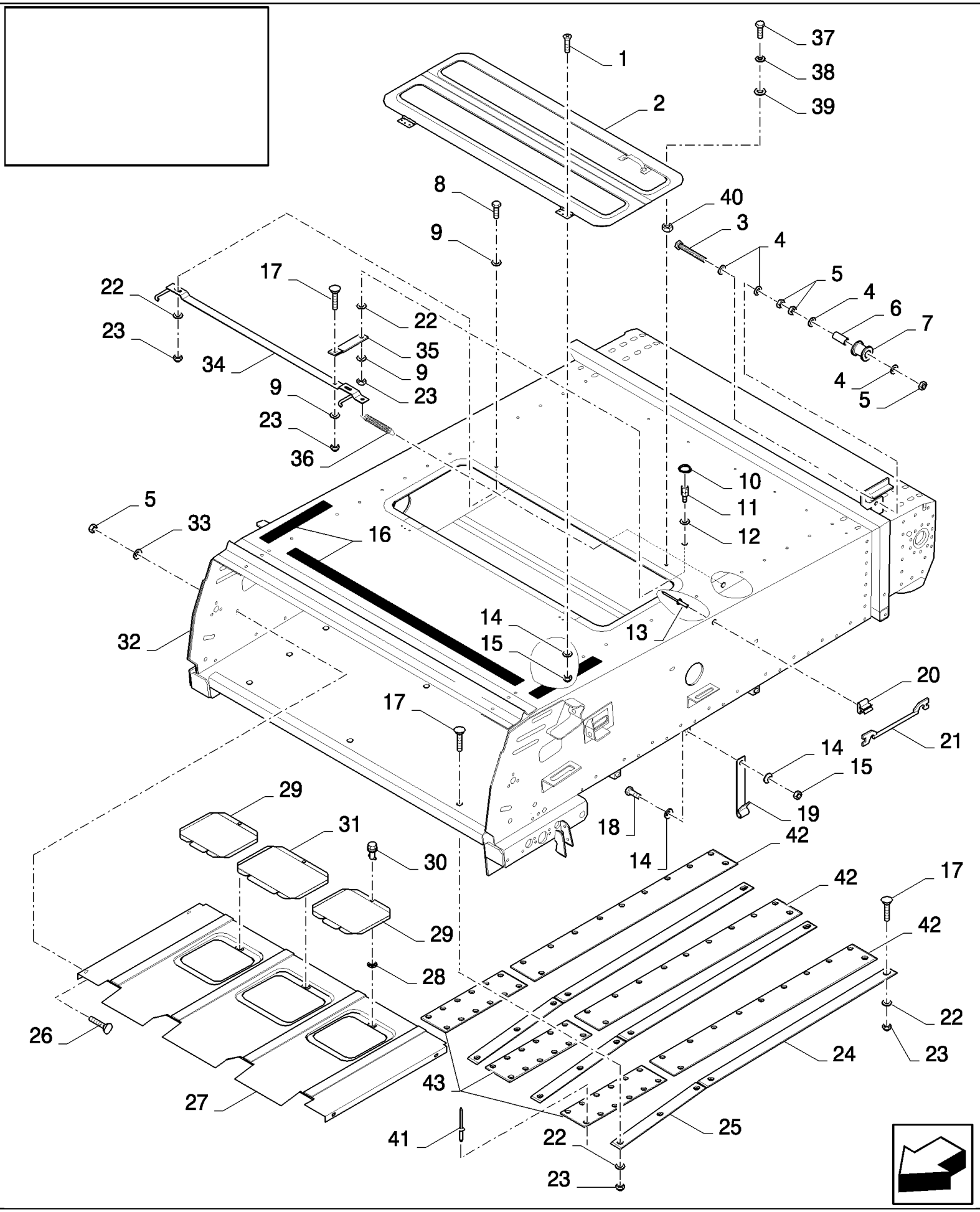

CX880 COMBINE - BASE UNIT (2/01-)

13.09(01) STRAW ELEVATOR WITH FRONT FACE ADJUSTMENT

ссылка	Номер детали	Кол-во	Описание
1	300580	6	SCREW, Hex Flat Hd, M6 x 16, 4.8, M6x16, BSN C305
2	84077018	1	COVER, , FOR CX820, CX840, CX860, CX880 ONLY, BSN C305
2	84440001	1	COVER, , FOR CX820, CX840, CX860, CX880 ONLY, ASN D306
2	84077145	1	COVER, , FOR CX720, CX740, CX760, CX780 ONLY, BSN C305
2	84440101	1	COVER, , FOR CX720, CX740, CX760, CX780 ONLY, ASN D306
3	538885	1	BOLT, Hex, M10 x 90, 8.8, Full Thd, M10x90
4	378244	4	WASHER, M10,
5	100016	7	NUT, M10, Cl 8,
6	9815355	1	SPACER,
7	9815357	4	ROLLER,
8	120104	2	SCREW, Hex, M8 x 20, 8.8, , BSN C305
9	378243	4	WASHER, M8, , BSN C305
10	301615	1	RING, SNAP, , BSN C305
11	84435604	1	COUPLING, , BSN C305
12	140248	2	WASHER, , BSN C305
13	445394	1	RIVET, Pop, M4.8 x 12.7,
14	322357	8	WASHER, SPRING, Belleville, M6,
15	15896221	7	NUT, M6, Cl 10,
16	401502	AR	STRIP, ANTI-SKID, 51mm x 18.3 Roll - Cut to Size
17	9837586	AR	BOLT, M8x20
18	120100	1	BOLT, Hex, M6 x 20, 8.8,
19	84072277	1	HOOK,
20	323307	1	CLAMP,
21	84431038	1	KEY, LOCK,
22	140041	AR	WASHER, M8 x 28 x 3, , BSN C305
23	86629542	AR	NUT, LOCK, M8 x 1.25, Cl 8, , BSN C305
24	84061962	3	WEAR STRIP, 2 Holes, FOR CX820, CX840, CX860, CX880 ONLY, BSN C351
24	84061962	2	WEAR STRIP, 2 Holes, FOR CX720, CX740, CX760, CX780 ONLY, BSN C351
25	84061963	3	WEAR STRIP, 3 Holes, 404mm Length, FOR CX820, CX840, CX860, CX880 ONLY, BSN C351
25	84061963	2	WEAR STRIP, 3 Holes, 404mm Length, FOR CX720, CX740, CX760, CX780 ONLY, BSN C351
26	86512446	4	BOLT, CARRIAGE, Short NK, M10 x 30, Cl8.8, Full Thd,
27	84071244	1	PLATE, , FOR CX820, CX840, CX860, CX880 ONLY, BSN C363
27	84449067	1	PLATE, , FOR CX820, CX840, CX860, CX880 ONLY, ASN D364
27	84459937	1	PLATE, , FOR CX820, CX840, CX860, CX880 ONLY, FOR SMALL GRAIN ONLY, ASN D482
27	84071230	1	PLATE, , FOR CX720, CX740, CX760, CX780 ONLY, BSN C363
27	84449073	1	PLATE, , FOR CX720, CX740, CX760, CX780 ONLY, ASN D364
27	84459938	1	PLATE, , FOR CX720, CX740, CX760, CX780 ONLY, FOR SMALL GRAIN ONLY, ASN D482
28	9514605	AR	WASHER, , NOT FOR SMALL GRAIN
29	84071269	2	COVER, , NOT FOR SMALL GRAIN, FOR CX820, CX840, CX860, CX880 ONLY, BSN C363
29	84448921	2	COVER, , FOR CX820, CX840, CX860, CX880 ONLY, NOT FOR SMALL GRAIN, ASN D364
30	89514603	AR	LOCK, , NOT FOR SMALL GRAIN
31	84071266	1	COVER, , NOT FOR SMALL GRAIN, FOR CX820, CX840, CX860, CX880 ONLY, BSN C363
31	84448919	1	COVER, , FOR CX820, CX840, CX860, CX880 ONLY, NOT FOR SMALL GRAIN, ASN D364
31	84071266	2	COVER, , NOT FOR SMALL GRAIN, FOR CX720, CX740, CX760, CX780 ONLY, BSN C363

13.09(01) STRAW ELEVATOR WITH FRONT FACE ADJUSTMENT

ссылка	Номер детали	Кол-во	Описание
31	84448919	2	COVER, , FOR CX720, CX740, CX760, CX780 ONLY, NOT FOR SMALL GRAIN, ASN D364
32	84073490	1	CONVEYOR, , FOR CX820, CX840, CX860, CX880 ONLY, WITH OPEN BOTTOM
32	84076095	1	CONVEYOR, , WITH CLOSED BOTTOM, FOR CX820, CX840, CX860, CX880 ONLY
32	84073492	1	CONVEYOR, , FOR CX720, CX740, CX760, CX780 ONLY, WITH OPEN BOTTOM
32	84434940	1	CONVEYOR, , WITH CLOSED BOTTOM, FOR CX720, CX740, CX760, CX780 ONLY
33	140045	4	WASHER, SPRING, Belleville, M10,
34	84077096	1	SUPPORT, , FOR CX820, CX840, CX860, CX880 ONLY, BSN C305
34	84077174	1	SUPPORT, , FOR CX720, CX740, CX760, CX780 ONLY, BSN C305
35	84435606	1	PLATE, , BSN C305
36	338713	1	SPRING, , BSN C305
37	43128	2	BOLT, Hex, M8 x 30, 8.8, , ASN D306
38	412650	2	WASHER, Belleville, M8, , ASN D306
39	140041	2	WASHER, M8 x 28 x 3, , ASN D306
40	86629542	2	NUT, LOCK, M8 x 1.25, Cl 8, , ASN D306
41	445394	AR	RIVET, Pop, M4.8 x 12.7, , ASN D352
42	84454026	3	WEAR STRIP, 3 Holes, FOR CX820, CX840, CX860, CX880 ONLY, ASN D352
42	84454026	2	WEAR STRIP, 3 Holes, FOR CX720, CX740, CX760, CX780 ONLY, ASN D352
43	84454039	3	WEAR STRIP, 12 Holes, 398mm Length, FOR CX820, CX840, CX860, CX880 ONLY, ASN D352
43	84454039	2	WEAR STRIP, 12 Holes, 398mm Length, FOR CX720, CX740, CX760, CX780 ONLY, ASN D352

13.10(01) STRAW ELEVATOR WITH LATERAL FLOTATION

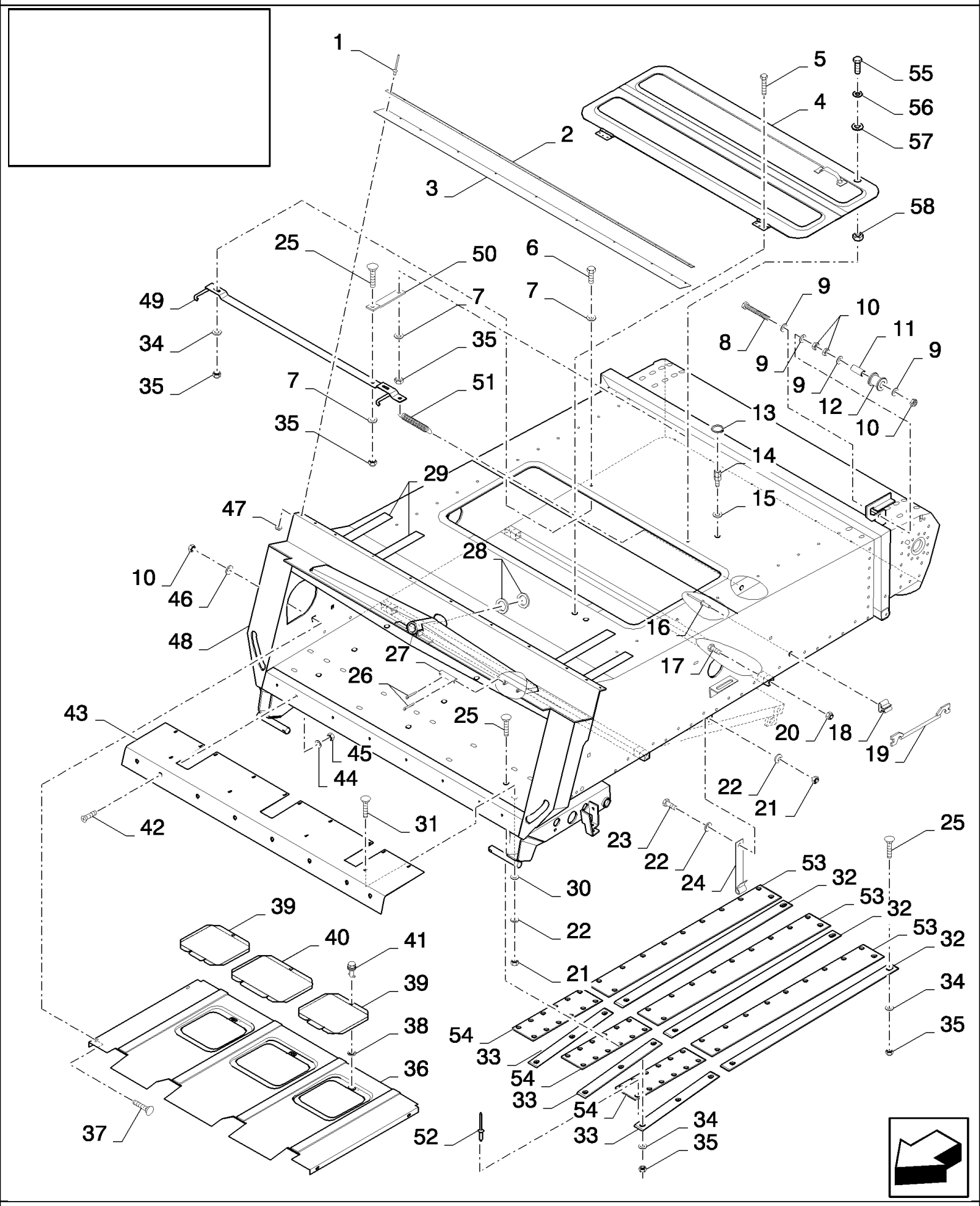

CX880 COMBINE - BASE UNIT (2/01-)

13.10(01) STRAW ELEVATOR WITH LATERAL FLOTATION

ссылка	Номер детали	Кол-во	Описание
1	NS	AR	NOT SERVICED,
2	84071233	1	PLATE, FIXING, , FOR CX820, CX840, CX860, CX880 ONLY
2	89593163	1	PLATE, FIXING, , FOR CX720, CX740, CX760, CX780 ONLY
3	84061508	1	CANVAS, , FOR CX820, CX840, CX860, CX880 ONLY, BSN C305
3	84443712	1	CANVAS, , FOR CX820, CX840, CX860, CX880 ONLY, ASN D306
3	84069272	1	CANVAS, , FOR CX720, CX740, CX760, CX780 ONLY, BSN C305
3	84442672	1	CANVAS, , FOR CX720, CX740, CX760, CX780 ONLY, ASN D306
4	84077018	1	COVER, , FOR CX820, CX840, CX860, CX880 ONLY, BSN C305
4	84440001	1	COVER, , FOR CX820, CX840, CX860, CX880 ONLY, ASN D306
4	84077145	1	COVER, , FOR CX720, CX740, CX760, CX780 ONLY, BSN C305
4	84440101	1	COVER, , FOR CX720, CX740, CX760, CX780 ONLY, ASN D306
5	300580	6	SCREW, Hex Flat Hd, M6 x 16, 4.8, M6x16
6	120104	2	SCREW, Hex, M8 x 20, 8.8,
7	378243	4	WASHER, M8,
8	538885	1	BOLT, Hex, M10 x 90, 8.8, Full Thd, M10x90
9	378244	4	WASHER, M10,
10	100016	10	NUT, M10, Cl 8,
11	9815355	1	SPACER,
12	9815357	1	ROLLER,
13	301615	1	RING, SNAP, , BSN C305
14	84435604	1	COUPLING, , BSN C305
15	140248	2	WASHER, M8, BSN C305
16	445394	1	RIVET, Pop, M4.8 x 12.7,
17	321246	4	BOLT, Hex, M16 x 120, 8.8,
18	323307	1	CLAMP,
19	84431038	1	KEY, LOCK,
20	412066	4	NUT, LOCK, M16 x 2, Cl 8, M16
21	15896221	AR	NUT, M6, Cl 10,
22	322357	AR	WASHER, SPRING, Belleville, M6,
23	120100	1	BOLT, Hex, M6 x 20, 8.8,
24	84072277	1	HOOK,
25	9837586	AR	BOLT, M8x20
26	130007	2	PIN, SPLIT (COTTER), M4 x 25, , WITH OPEN BOTTOM
27	356015	1	SPINDLE, , WITH OPEN BOTTOM
28	84018313	2	WASHER,
29	401502	AR	STRIP, ANTI-SKID, 51mm x 18.3 Roll - Cut to Size
30	140015	AR	WASHER, 6MM
31	9706703	AR	BOLT, CARRIAGE, Short NK, M6 x 20, Cl8.8, Full Thd,
32	84061962	3	WEAR STRIP, , FOR CX820, CX840, CX860, CX880 ONLY, BSN C351
32	84061962	2	WEAR STRIP, , FOR CX720, CX740, CX760, CX780 ONLY, BSN C351
33	84076919	3	WEAR STRIP, , FOR CX820, CX840, CX860, CX880 ONLY, BSN C351
33	84076919	2	WEAR STRIP, , FOR CX720, CX740, CX760, CX780 ONLY, BSN C351
34	140041	AR	WASHER, M8 x 28 x 3,
35	86629542	AR	NUT, LOCK, M8 x 1.25, Cl 8,

ссылка	Номер детали	Кол-во	Описание
36	84071244	1	PLATE, , FOR CX820, CX840, CX860, CX880 ONLY
36	84071230	1	PLATE, , FOR CX720, CX740, CX760, CX780 ONLY
37	V43471	4	BOLT, M10x20
38	9514605	AR	WASHER,
39	84071269	2	COVER, , FOR CX820, CX840, CX860, CX880 ONLY
40	84071266	1	COVER, , FOR CX820, CX840, CX860, CX880 ONLY
40	84071266	2	COVER, , FOR CX720, CX740, CX760, CX780 ONLY
41	89514603	AR	LOCK,
42	412495	AR	SCREW, Hex Soc Flat Hd, M8 x 20, 8.8,
43	84075340	1	PLATE, SKID, , FOR CX820, CX840, CX860, CX880 ONLY, BSN C359
43	84444790	1	PLATE, SKID, , FOR CX820, CX840, CX860, CX880 ONLY, ASN D360
43	84432797	1	PLATE, SKID, , FOR CX720, CX740, CX760, CX780 ONLY, BSN C359
43	84447083	1	PLATE, SKID, , FOR CX720, CX740, CX760, CX780 ONLY, ASN D360
44	322358	AR	WASHER, SPRING, Belleville, M8,
45	89706690	AR	NUT, M8, Cl 8,
46	140045	4	WASHER, SPRING, Belleville, M10,
47	9824326	AR	WASHER, M5, 5MM
48	84989236	1	CONVEYOR, , FOR CX820, CX840, CX860, CX880 ONLY, WITH OPEN BOTTOM
48	84989242	1	CONVEYOR, , WITH CLOSED BOTTOM, FOR CX820, CX840, CX860, CX880 ONLY
48	84989243	1	CONVEYOR, , FOR CX720, CX740, CX760, CX780 ONLY, WITH OPEN BOTTOM
48	84989237	1	CONVEYOR, , WITH CLOSED BOTTOM, FOR CX720, CX740, CX760, CX780 ONLY
49	84077096	1	SUPPORT, , FOR CX820, CX840, CX860, CX880 ONLY, BSN C305
49	84077174	1	SUPPORT, , FOR CX720, CX740, CX760, CX780 ONLY, BSN C305
50	84435606	1	PLATE, , BSN C305
51	338713	1	SPRING, , BSN C305
52	445394	AR	RIVET, Pop, M4.8 x 12.7, , ASN D360
53	84454026	3	WEAR STRIP, , FOR CX820, CX840, CX860, CX880 ONLY, ASN D352
53	84454026	2	WEAR STRIP, , FOR CX720, CX740, CX760, CX780 ONLY, ASN D352
54	84454030	3	WEAR STRIP, , FOR CX820, CX840, CX860, CX880 ONLY, ASN D352
54	84454030	2	WEAR STRIP, , FOR CX720, CX740, CX760, CX780 ONLY, ASN D352
55	43128	2	BOLT, Hex, M8 x 30, 8.8,
56	412650	2	WASHER, Belleville, M8,
57	140041	2	WASHER, M8 x 28 x 3,
58	86629542	2	NUT, LOCK, M8 x 1.25, Cl 8,

13.11(01) BOTTOM PLATE FOR OPEN CONVEYOR

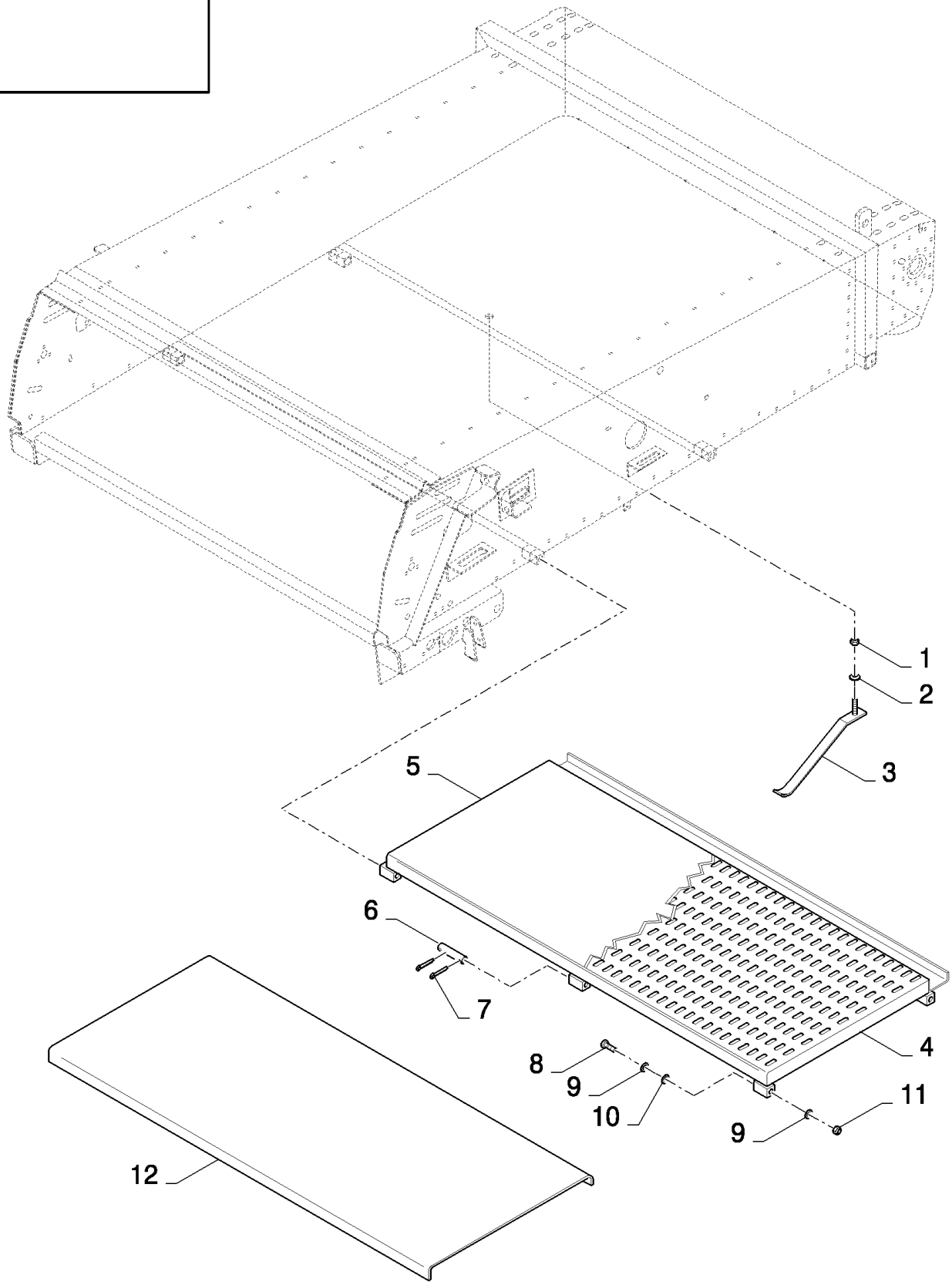

CX880 COMBINE - BASE UNIT (2/01-)

13.11(01) BOTTOM PLATE FOR OPEN CONVEYOR

ссылка	Номер детали	Кол-во	Описание
1	100037	1	NUT, M10 x 1.5, Cl 8,
2	140045	1	WASHER, SPRING, Belleville, M10,
3	84018386	1	LEVER,
4	84001087	1	COVER, , FOR CX820, CX840, CX860, CX880 ONLY, PERFORATED
4	84001410	1	COVER, , PERFORATED, FOR CX720, CX740, CX760, CX780 ONLY
5	9593863	1	COVER, , FOR CX820, CX840, CX860, CX880 ONLY
5	84001248	1	COVER, , FOR CX720, CX740, CX760, CX780 ONLY
6	356015	1	SPINDLE,
7	130007	2	PIN, SPLIT (COTTER), M4 x 25,
8	321246	4	BOLT, Hex, M16 x 120, 8.8,
9	378246	8	WASHER, 16MM
10	9513615	4	WASHER,
11	412066	4	NUT, LOCK, M16 x 2, Cl 8, M16
12	84001050	1	PLATE, , FOR CX820, CX840, CX860, CX880 ONLY
12	84001409	1	PLATE, , FOR CX720, CX740, CX760, CX780 ONLY

13.12(01) LOWER SHAFT WITH LATERAL FLOTATION ONLY

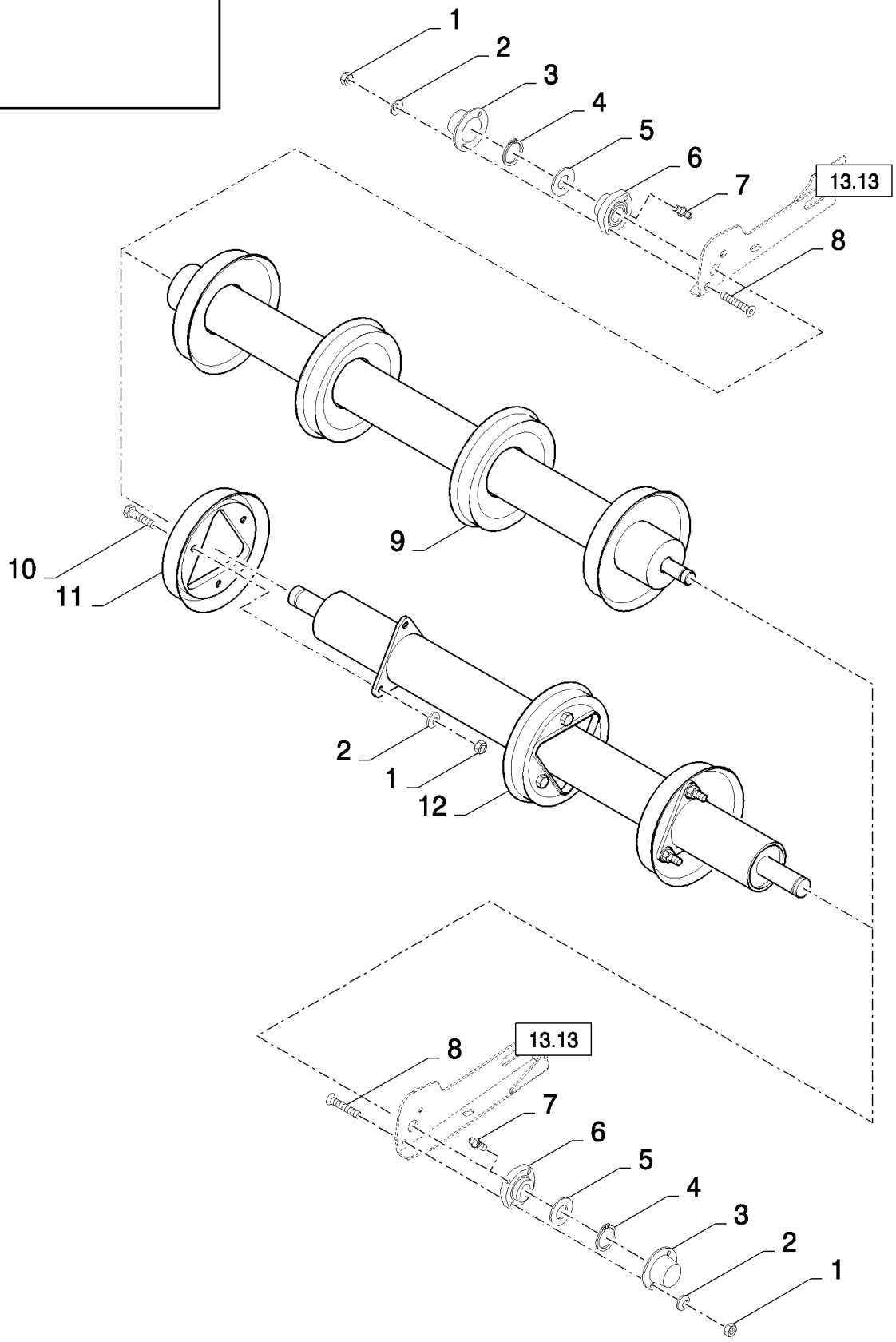

CX880 COMBINE - BASE UNIT (2/01-)

13.12(01) LOWER SHAFT WITH LATERAL FLOTATION ONLY

ссылка	Номер детали	Кол-во	Описание
1	100016	13	NUT, M10, Cl 8,
2	140045	13	WASHER, SPRING, Belleville, M10,
3	84433802	2	COVER, , BSN C257
4	370003	2	RING, SNAP, M30, Ext,
5	441176	4	WASHER,
6	84078927	2	BEARING ASSY,
7	84022088	2	NIPPLE, LUBE,
8	120259	4	SCREW, Hex Soc Flat Hd, M10 x 40, 8.8,
9	84077190	1	ROLLER, CONVEYOR, , FOR CX820, CX840, CX860, CX880 ONLY, BSN C431
9	87318775	1	ROLLER, CONVEYOR, , FOR CX820, CX840, CX860, CX880 ONLY, ASN D432
10	43139	9	SCREW, Hex, M10 x 25, 8.8, Full Thd, M10x25, FOR CX720, CX740, CX760, CX780 ONLY
11	9503110	3	FLANGE, , FOR CX720, CX740, CX760, CX780 ONLY
12	84433938	1	ROLLER, CONVEYOR, , FOR CX720, CX740, CX760, CX780 ONLY

13.13(01) SUSPENSION BRACES WITH LATERAL FLOTATION ONLY

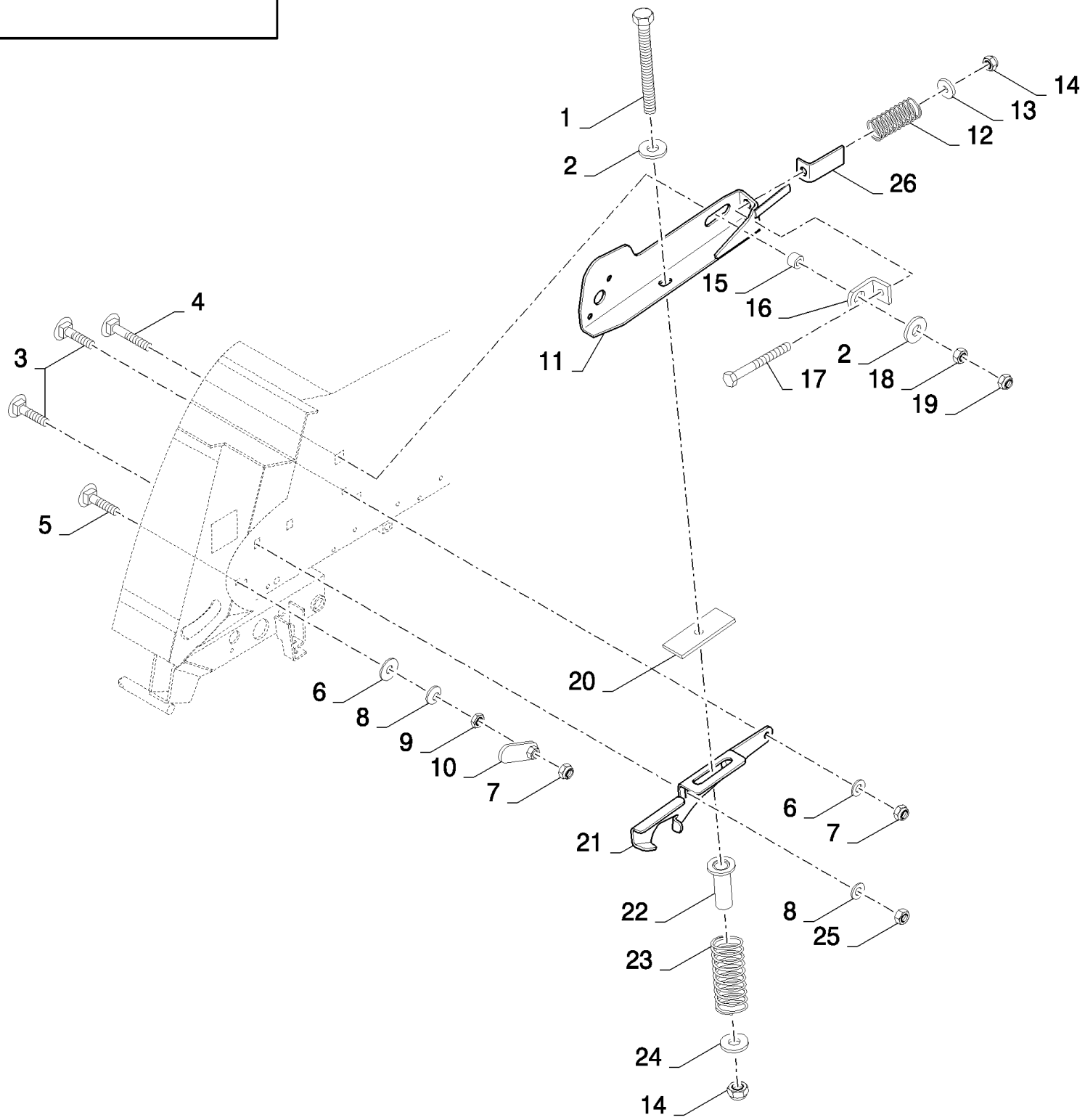

CX880 COMBINE - BASE UNIT (2/01-)

13.13(01) SUSPENSION BRACES WITH LATERAL FLOTATION ONLY

ссылка	Номер детали	Кол-во	Описание
1	9814566	2	BOLT, Hex, M16 x 190, 8.8, Full Thd,
2	325594	4	WASHER,
3	120044	6	BOLT, CARRIAGE, Short NK, M12 x 30, Cl8.8, Full Thd,
4	120046	2	BOLT, CARRIAGE, Short NK, M16 x 60, Cl8.8, Full Thd,
5	334682	2	BOLT, CARRIAGE, Short NK, M12 x 50, Cl8.8, Full Thd,
6	378245	4	WASHER, M12,
7	100038	4	NUT, M12 x 1.75, Cl 8,
8	140046	6	WASHER, Belleville, M12,
9	323238	2	NUT, Thin, M12 x 1.75, Cl 05,
10	84433667	2	CAM,
11	84076750	1	ARM, LH, BSN C427
11	84457756	1	ARM, LH, ASN D428
11	84076748	1	ARM, RH, BSN C427
11	84457755	1	ARM, RH, ASN D428
12	84075179	2	SPRING,
13	140091	2	WASHER,
14	412066	4	NUT, LOCK, M16 x 2, Cl 8, M16
15	84052730	2	BUSHING,
16	84075539	2	BRACKET,
17	84435244	2	BOLT, Hex, M16 x 180, 8.8,
18	100020	2	NUT, M16, Cl 8,
19	86000441	2	NUT, M16 x 2, Cl 8,
20	9815111	2	CANVAS,
21	84433668	1	SUPPORT, LH
21	84433669	1	SUPPORT, RH
22	921084	2	TUBE,
23	920397	2	SPRING,
24	451743	2	WASHER,
25	9706685	4	NUT, M12, Cl 8,
26	84461549	2	INDICATOR, , ASN D428

13.14(01) LOWER SHAFT WITH FRONT FACE ADJUSTMENT AND LATERAL FLOTATION

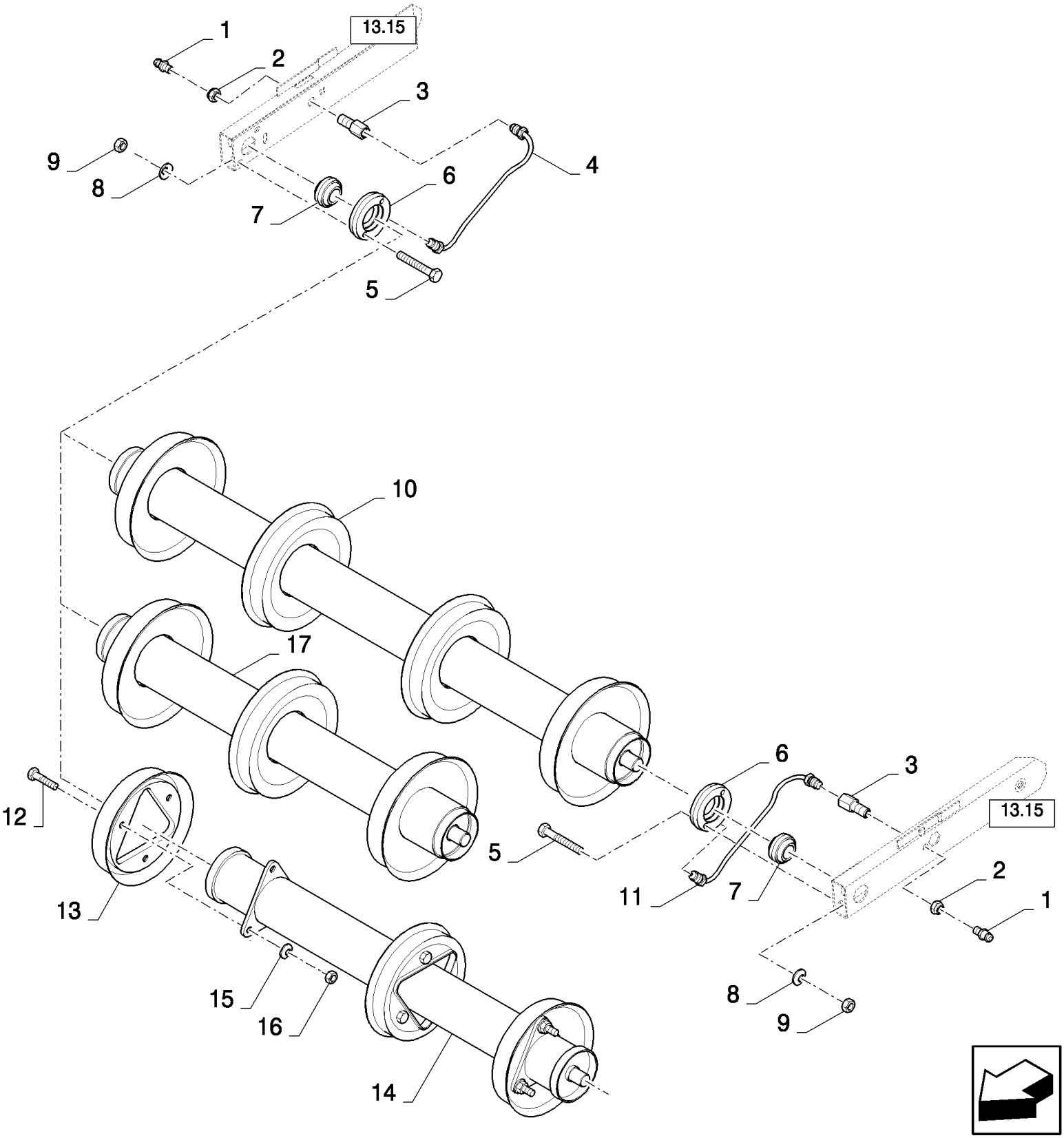

CX880 COMBINE - BASE UNIT (2/01-)

13.14(01) LOWER SHAFT WITH FRONT FACE ADJUSTMENT AND LATERAL FLOTATION

ссылка	Номер детали	Кол-во	Описание
1	321204	2	NIPPLE, LUBE, M6 x 1, 16mm lg,
2	86514720	2	NUT, LOCK,
3	9510459	2	CONNECTOR, HYD.,
4	84004228	1	TUBE, RIGID, RH
5	120069	4	SCREW, Hex, M10 x 50, 8.8,
6	84072980	2	HOUSING, BEARING,
7	84019208	2	BEARING ASSY,
8	140045	4	WASHER, SPRING, Belleville, M10,
9	100016	4	NUT, M10, Cl 8,
10	84072098	1	ROLLER, CONVEYOR, , FOR CX820, CX840, CX860, CX880 ONLY
11	84004226	1	TUBE, RIGID, LH
12	43139	9	SCREW, Hex, M10 x 25, 8.8, Full Thd, M10x25, FOR CX720, CX740, CX760, CX780 ONLY, BSN C41
13	9503110	3	FLANGE, , FOR CX720, CX740, CX760, CX780 ONLY, BSN C415
14	84071987	1	ROLLER, CONVEYOR, , FOR CX720, CX740, CX760, CX780 ONLY, BSN C415
15	140045	9	WASHER, SPRING, Belleville, M10, , FOR CX720, CX740, CX760, CX780 ONLY, BSN C415
16	100037	9	NUT, M10 x 1.5, Cl 8, , FOR CX720, CX740, CX760, CX780 ONLY, BSN C415
17	84457375	1	ROLLER, CONVEYOR, , FOR CX720, CX740, CX760, CX780 ONLY, BSN F416431
17	87318779	1	ROLLER, CONVEYOR, , FOR CX720, CX740, CX760, CX780 ONLY, ASN D432

13.15(01) SUSPENSION BRACES WITH FRONT FACE ADJUSTMENT AND LATERAL FLOTATION ONLY

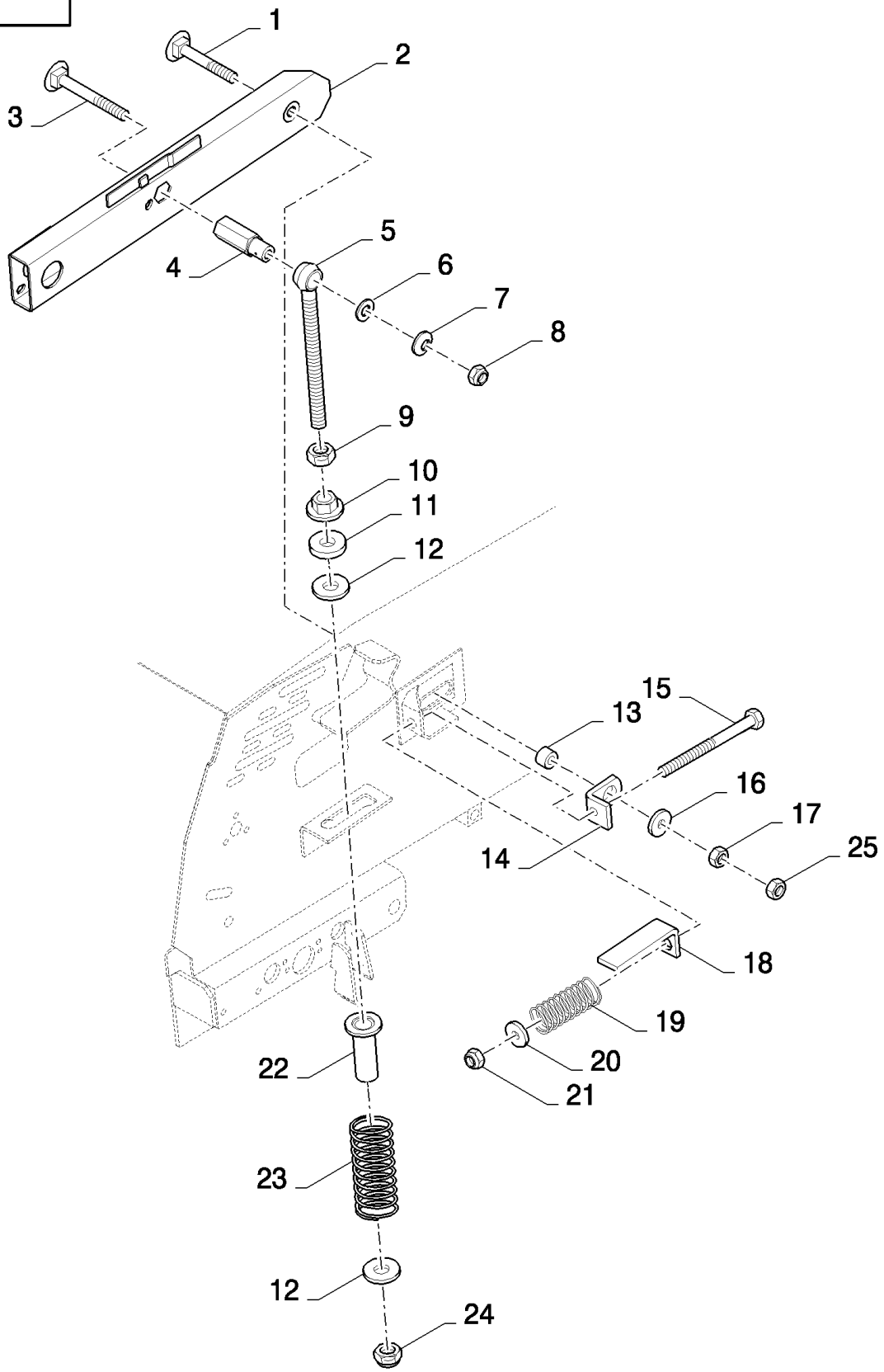

CX880 COMBINE - BASE UNIT (2/01-)

13.15(01) SUSPENSION BRACES WITH FRONT FACE ADJUSTMENT AND LATERAL FLOTATION ONLY

ссылка	Номер детали	Кол-во	Описание
1	322362	2	BOLT, CARRIAGE, Short NK, M16 x 100, Cl8.8, M16x100
2	84071243	1	SUSPENSION, RH
2	84071236	1	SUSPENSION, LH
3	412339	2	BOLT, CARRIAGE, Short NK, M12 x 120, Cl8.8, M12x120
4	84071261	2	BUSHING,
5	84035977	2	EYEBOLT,
6	378245	2	WASHER, M12,
7	140046	2	WASHER, Belleville, M12,
8	100038	2	NUT, M12 x 1.75, Cl 8,
9	9706694	2	NUT, M20, Cl 8,
10	84072978	2	NUT,
11	84057094	2	DAMPER,
12	86592703	4	WASHER, M20 x 50 x 6, HT,
13	84076896	2	BUSHING,
14	84075539	2	BRACKET,
15	84435244	2	BOLT, Hex, M16 x 180, 8.8, M16x180
16	325594	2	WASHER,
17	100020	2	NUT, M16, Cl 8,
18	84075251	2	INDICATOR,
19	84075179	2	SPRING,
20	84005115	2	WASHER,
21	412066	2	NUT, LOCK, M16 x 2, Cl 8,
22	84072979	2	TUBE,
23	84072994	2	SPRING,
24	9672396	2	NUT, LOCK, M20
25	86000441	2	NUT, M16 x 2, Cl 8,

13.17(01) ELEVATOR CHAIN (4)

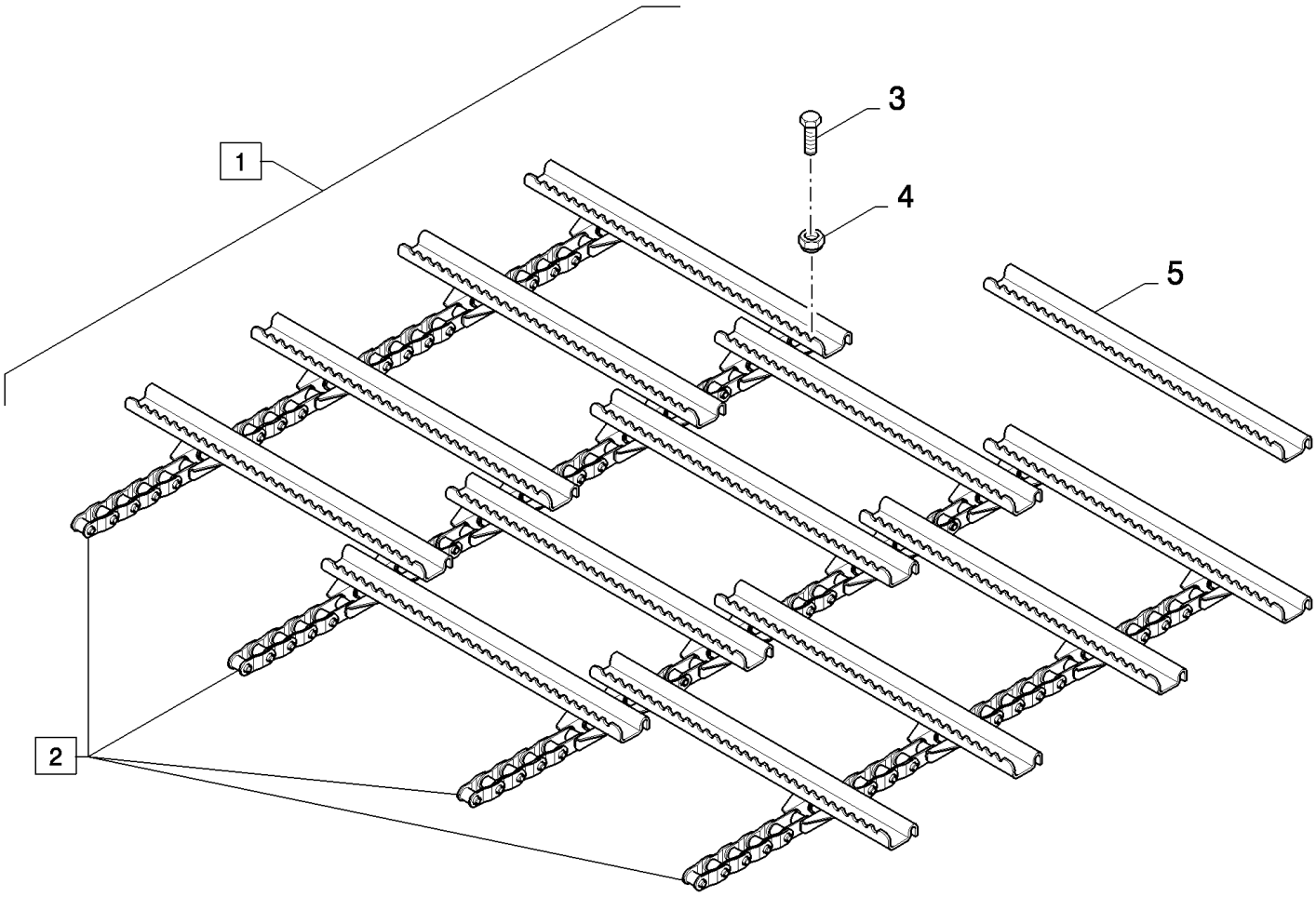

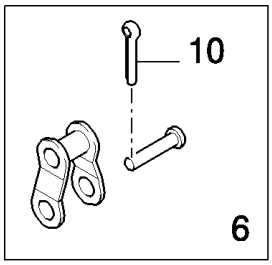

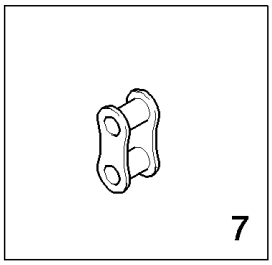

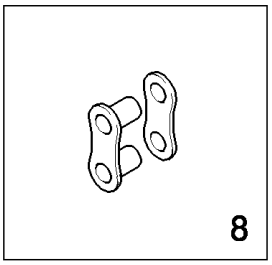

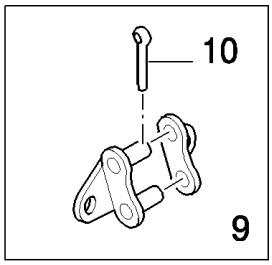

13.17(01) ELEVATOR CHAIN (4)

ссылка	Номер детали	Кол-во	Описание
1	84064811	1	SET OF CHAINS, (2 to 10), FOR FRONT FACE ADJUSTMENT WITH LF ONLY, HEAVY DUTY, FOR CX840, CX860, CX880 ONLY, BSN C315
1	84440039	1	SET OF CHAINS, 45 Slats (2 to 10) - Adjustable Face Plate, FOR CX840, CX860, CX880 ONLY, HEAVY DUTY, FOR FRONT FACE ADJUSTMENT WITH LF ONLY, BSN F316395
1	84455508	1	CHAIN, (2 to 10), FOR FRONT FACE ADJUSTMENT WITH LF ONLY, HEAVY DUTY, FOR CX840, CX860, CX880 ONLY, ASN D396
1	84438857	1	SET OF CHAINS, (2 to 10), STANDARD, FOR LATERAL FLOTATION ONLY, FOR CX820 ONLY, BSN C315
1	84444697	1	SET OF CHAINS, (2 to 10), FOR CX820 ONLY, FOR LATERAL FLOTATION ONLY, STANDARD, BSN F316395
1	84455644	1	CHAIN, (2 to 10), STANDARD, FOR LATERAL FLOTATION ONLY, FOR CX820 ONLY, ASN D396
1	84439050	1	SET OF CHAINS, (2 to 10), FOR CX820 ONLY, FOR FRONT FACE ADJUSTMENT WITH LF ONLY, STANDARD, BSN C315
1	84444621	1	SET OF CHAINS, (2 to 10), STANDARD, FOR FRONT FACE ADJUSTMENT WITH LF ONLY, FOR CX820 ONLY, BSN F316395
1	84455628	1	CHAIN, (2 to 10), FOR CX820 ONLY, FOR FRONT FACE ADJUSTMENT WITH LF ONLY, STANDARD, ASN D396
1	84064975	1	SET OF CHAINS, (2 to 10), FOR CX840, CX860, CX880 ONLY, FOR LATERAL FLOTATION ONLY, HEAVY DUTY, BSN C315
1	84444518	1	SET OF CHAINS, (2 to 10) - Fixed Face Plate, HEAVY DUTY, FOR LATERAL FLOTATION ONLY, FOR CX840, CX860, CX880 ONLY, BSN F316395
1	84455640	1	CHAIN, (2 to 10), FOR CX840, CX860, CX880 ONLY, FOR LATERAL FLOTATION ONLY, HEAVY DUTY, ASN D396
2	84064286	1	SET OF CHAINS, 60 Slats (6 to 10), HEAVY DUTY, FOR FRONT FACE ADJUSTMENT WITH LF ONLY, FOR CX840, CX860, CX880 ONLY, BSN C315
2	84440038	1	SET OF CHAINS, (6 to 10), FOR CX840, CX860, CX880 ONLY, FOR FRONT FACE ADJUSTMENT WITH LF ONLY, HEAVY DUTY, BSN F316395
2	84455509	1	SET OF CHAINS, (6 to 10), HEAVY DUTY, FOR FRONT FACE ADJUSTMENT WITH LF ONLY, FOR CX840, CX860, CX880 ONLY, ASN D396
2	84437576	1	SET OF CHAINS, (6 to 10), STANDARD, FOR LATERAL FLOTATION ONLY, FOR CX820 ONLY, BSN C315
2	84444693	1	SET OF CHAINS, (6 to 10), FOR CX820 ONLY, FOR LATERAL FLOTATION ONLY, STANDARD, BSN F316395
2	84455645	1	SET OF CHAINS, (6 to 10), STANDARD, FOR LATERAL FLOTATION ONLY, FOR CX820 ONLY, ASN D396
2	84438977	1	SET OF CHAINS, (6 to 10), FOR CX820 ONLY, FOR FRONT FACE ADJUSTMENT WITH LF ONLY, STANDARD, BSN C315
2	84444617	1	SET OF CHAINS, (6 to 10), STANDARD, FOR FRONT FACE ADJUSTMENT WITH LF ONLY, FOR CX820 ONLY, BSN F316395
2	84455629	1	SET OF CHAINS, (6 to 10), FOR CX820 ONLY, FOR FRONT FACE ADJUSTMENT WITH LF ONLY, STANDARD, ASN D396
2	84058319	1	SET OF CHAINS, (6 to 10), FOR CX840, CX860, CX880 ONLY, FOR LATERAL FLOTATION ONLY, HEAVY DUTY, BSN C315

CX880 COMBINE - BASE UNIT (2/01-)

13.17(01) ELEVATOR CHAIN (4)

ссылка	Номер детали	Кол-во	Описание
2	84444516	1	SET OF CHAINS, (6 to 10), HEAVY DUTY, FOR LATERAL FLOTATION ONLY, FOR CX840, CX860, CX880 ONLY, BSN F316395
2	84455641	1	SET OF CHAINS, (6 to 10), FOR CX840, CX860, CX880 ONLY, FOR LATERAL FLOTATION ONLY, HEAVY DUTY, ASN D396
3	43138	AR	SCREW, Hex, M10 x 20, 8.8, Full Thd,
4	100037	AR	NUT, M10 x 1.5, Cl 8,
5	84076900	AR	BAR, U-profile
5	84438786	AR	BAR, L-profile, FOR LATERAL FLOTATION ONLY, STANDARD
6	9623610	AR	LINK, OFFSET, , HEAVY DUTY
6	40242	AR	LINK, OFFSET, , STANDARD
7	86595254	AR	LINK, CHAIN, , HEAVY DUTY
7	86595253	AR	LINK, CHAIN, , STANDARD
8	9623609	AR	LINK, CONNECTING, , HEAVY DUTY
8	40241	AR	LINK, CONNECTING, , STANDARD
9	86531660	AR	LINK, CHAIN, , HEAVY DUTY
9	84437453	AR	LINK, CHAIN, , STANDARD
10	NS	AR	NOT SERVICED,

13.18(01) STRAW ELEVATOR, GUIDE ROLL

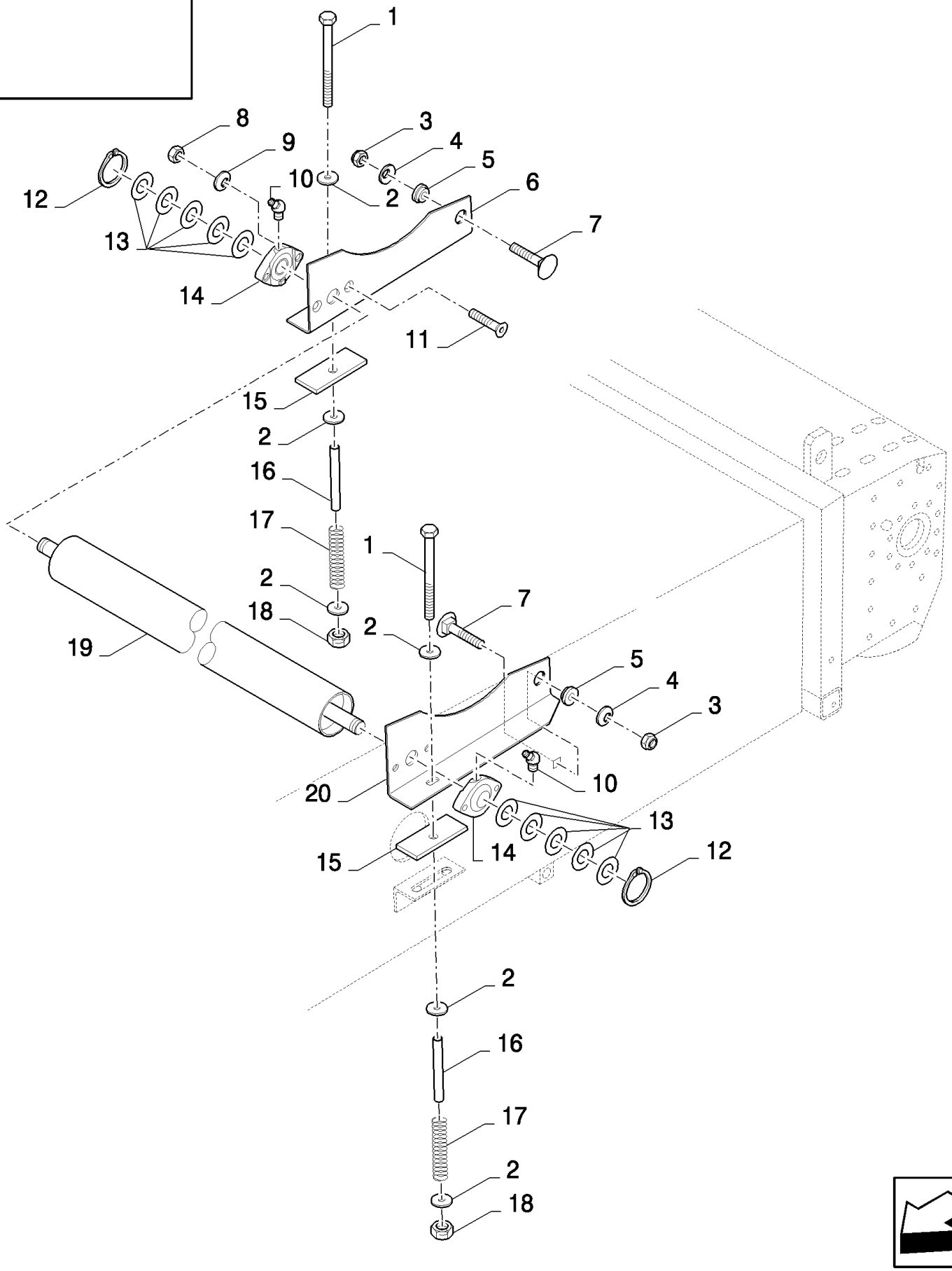

CX880 COMBINE - BASE UNIT (2/01-)

13.18(01) STRAW ELEVATOR, GUIDE ROLL

ссылка	Номер детали	Кол-во	Описание
1	412579	2	BOLT, Hex, M10 x 230, 8.8,
2	9832748	6	WASHER,
3	100038	2	NUT, M12 x 1.75, Cl 8,
4	140046	2	WASHER, Belleville, M12,
5	9500475	2	BUSHING,
6	84039236	1	SUPPORT,
7	120044	2	BOLT, CARRIAGE, Short NK, M12 x 30, Cl8.8, Full Thd,
8	100016	4	NUT, M10, Cl 8,
9	140045	4	WASHER, SPRING, Belleville, M10,
10	323787	2	NIPPLE, LUBE,
11	412466	4	SCREW, Hex Soc Flat Hd, M10 x 35, 8.8,
12	370002	2	RING, SNAP, M25, Ext,
13	140229	AR	WASHER,
14	9514667	2	BEARING ASSY,
15	9500474	2	PAD, RUBBER,
16	84334391	2	TUBE,
17	354085	2	SPRING,
18	86514720	2	NUT, LOCK,
19	84071544	1	ROLLER, CONVEYOR, , FOR LATERAL FLOTATION ONLY, FOR CX820, CX840, CX860, CX880 ONLY, FOR FRONT FACE ADJUSTMENT WITH LF ONLY
19	84071545	1	ROLLER, , FOR FRONT FACE ADJUSTMENT WITH LF ONLY, FOR CX720, CX740, CX760, CX780 ONLY, FOR LATERAL FLOTATION ONLY
20	84039235	1	SUPPORT,

13.19(01) STRAW ELEVATOR, UPPER SHAFT DRIVE

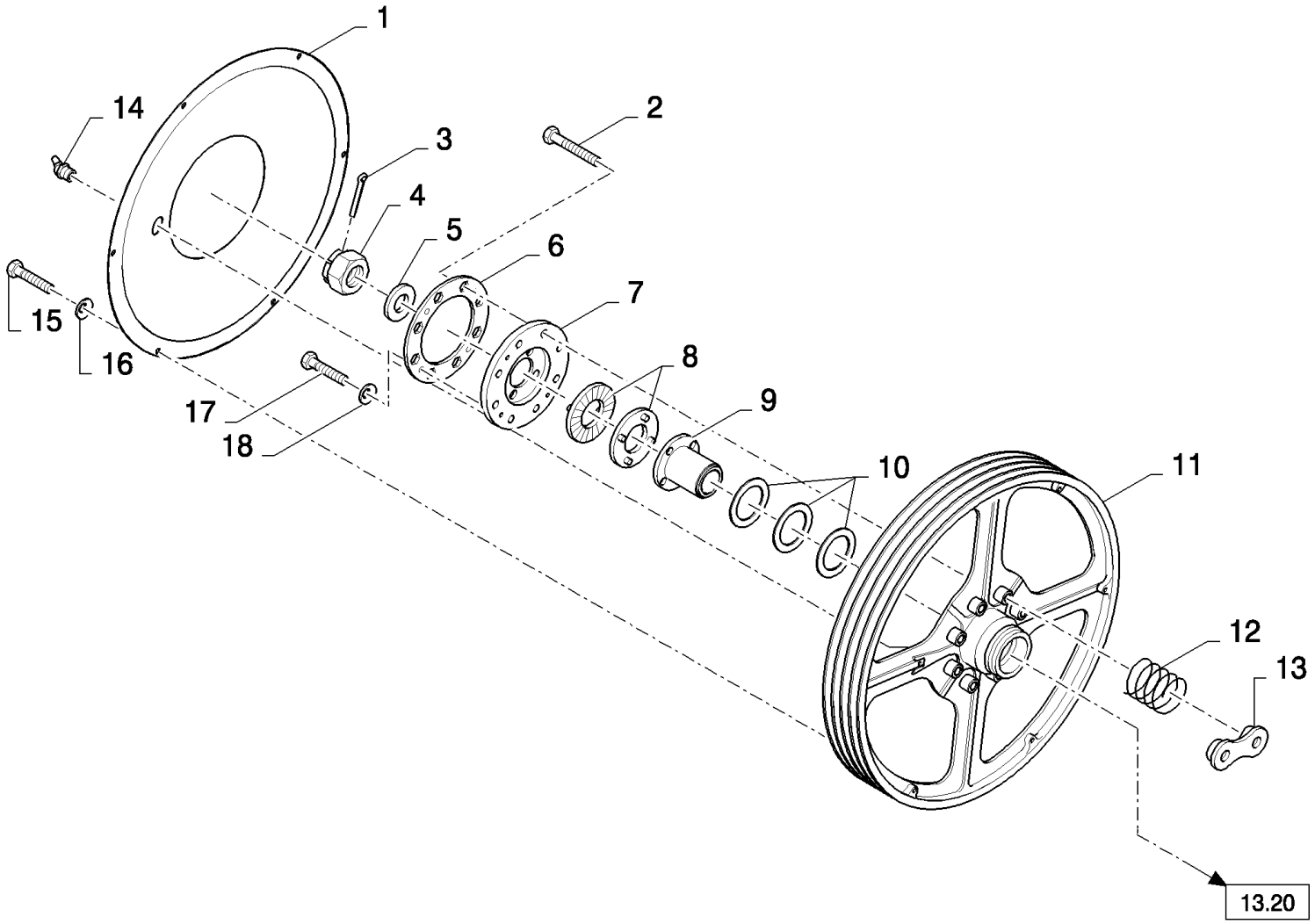

CX880 COMBINE - BASE UNIT (2/01-)

13.19(01) STRAW ELEVATOR, UPPER SHAFT DRIVE

ссылка	Номер детали	Кол-во	Описание
1	84069803	1	SHIELD,
2	86505259	8	SCREW, Hex, M12 x 70, 10.9,
3	130012	1	PIN, SPLIT (COTTER), M5 x 50,
4	309090	1	NUT, SLOTTED, M24 x 1.5, Cl 8, M24
5	84073585	1	WASHER,
6	84071421	1	PLATE, LOCKING,
7	84069812	1	DISC,
8	362801	2	CLUTCH,
9	84042751	1	BUSHING,
10	84036681	3	WASHER,
11	84072270	1	PULLEY,
12	84073712	8	SPRING,
13	84071664	4	PLATE, FIXING,
14	323787	1	NIPPLE, LUBE,
15	86508568	6	SCREW, Hex, M6 x 16, 8.8,
16	412649	6	WASHER, SPRING, Belleville, M6,
18	322358	4	WASHER, SPRING, Belleville, M8,
17	16043224	4	BOLT, Hex, M8 x 16, 8.8, Full Thd,

13.20(01) STRAW ELEVATOR, UPPER SHAFT

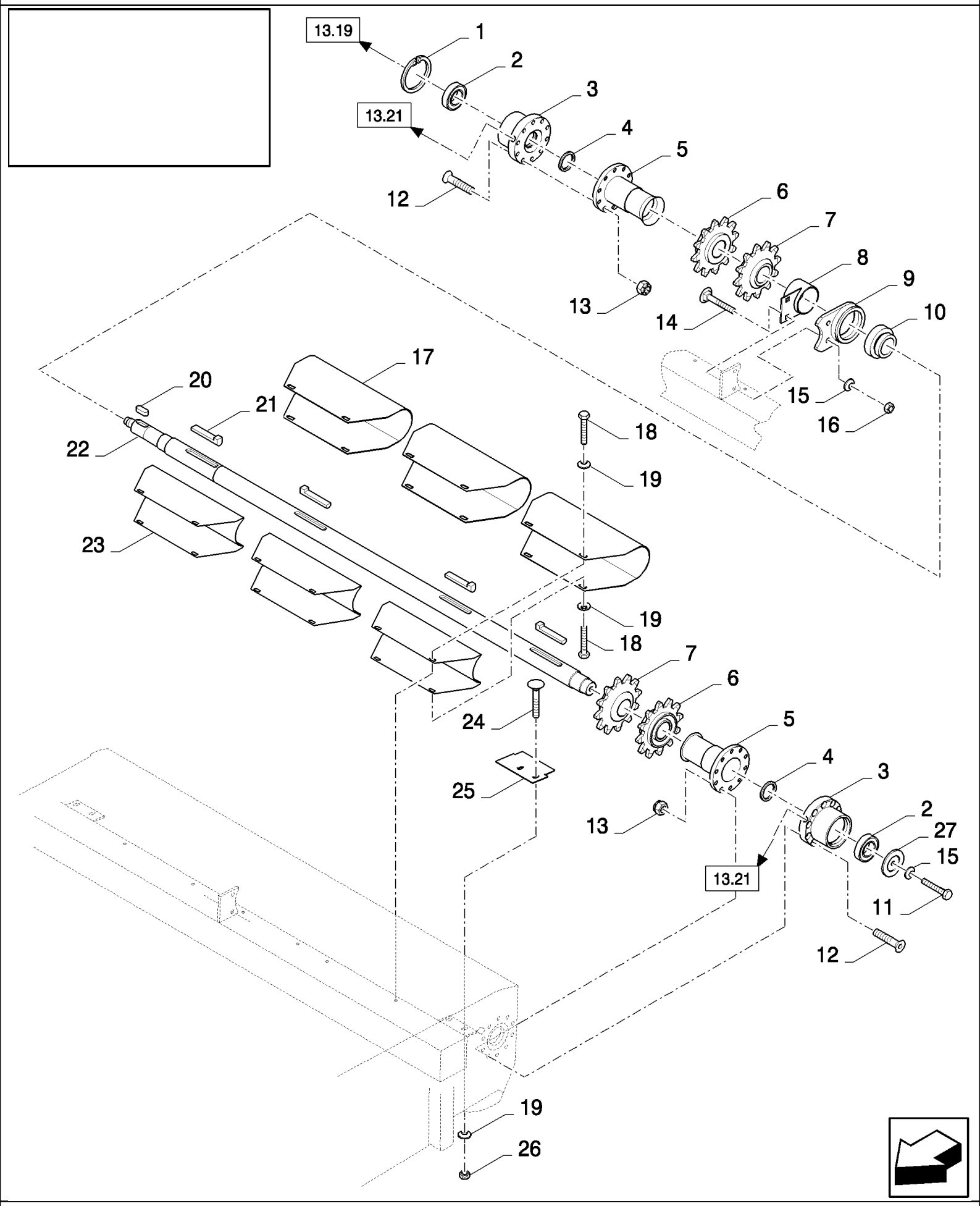

CX880 COMBINE - BASE UNIT (2/01-)

13.20(01) STRAW ELEVATOR, UPPER SHAFT

ссылка	Номер детали	Кол-во	Описание
1	80300633	1	RING, SNAP,
2	323327	2	BEARING ASSY,
3	84435013	2	HOUSING, BEARING,
4	220012	2	RING,
5	84073705	2	SHIELD, , FOR CX820, CX840, CX860, CX880 ONLY
5	84073706	2	SHIELD, , FOR CX720, CX740, CX760, CX780 ONLY
6	84072022	2	SPROCKET, DRIVEN,
7	84072029	2	SPROCKET, DRIVEN, , FOR CX820, CX840, CX860, CX880 ONLY
7	84072029	1	SPROCKET, DRIVEN, , FOR CX720, CX740, CX760, CX780 ONLY
8	84073592	1	COVER, , FOR CX820, CX840, CX860, CX880 ONLY
9	751779	1	HOUSING, BEARING, , FOR CX820, CX840, CX860, CX880 ONLY
10	754393	1	BEARING ASSY, , FOR CX820, CX840, CX860, CX880 ONLY
11	9706687	1	SCREW, Hex, M12 x 30, 8.8,
12	84334564	20	SCREW, Hex Soc Flat Hd, M10 x 40, 12.9, M10x40
13	100037	20	NUT, M10 x 1.5, Cl 8,
14	328430	2	BOLT, CARRIAGE, Short NK, M12 x 35, Cl8.8, Full Thd, M12x35, FOR CX820, CX840, CX860, CX880 ONLY
15	140046	3	WASHER, Belleville, M12,
16	9706685	2	NUT, M12, Cl 8, , FOR CX820, CX840, CX860, CX880 ONLY
17	84072031	3	SHIELD, , FOR CX820, CX840, CX860, CX880 ONLY
17	84073714	2	SHIELD, , FOR CX720, CX740, CX760, CX780 ONLY
18	86512788	12	SCREW, M8x30, BSN C419
18	84025547	12	SCREW, M8x20, ASN D420
19	412650	16	WASHER, Belleville, M8,
20	320607	1	KEY,
21	412241	4	KEY, , FOR CX820, CX840, CX860, CX880 ONLY
21	412241	3	KEY, , FOR CX720, CX740, CX760, CX780 ONLY
22	84057982	1	SHAFT, , FOR CX820, CX840, CX860, CX880 ONLY
22	84064817	1	SHAFT, , FOR CX720, CX740, CX760, CX780 ONLY, BSN C427
22	84461916	1	SHAFT, , FOR CX720, CX740, CX760, CX780 ONLY, ASN D428
23	84073716	3	SHIELD, , FOR CX820, CX840, CX860, CX880 ONLY
23	84073715	2	SHIELD, , FOR CX720, CX740, CX760, CX780 ONLY
24	86507486	4	BOLT, CARRIAGE, Short NK, M8 x 20, Cl8.8, Full Thd,
25	84073735	2	PLATE, , FOR CX820, CX840, CX860, CX880 ONLY
25	84073737	2	PLATE, , FOR CX720, CX740, CX760, CX780 ONLY
26	89706690	4	NUT, M8, Cl 8,
27	84053190	1	COVER,

13.21(01) STRAW ELEVATOR, UPPER SHAFT GREASING

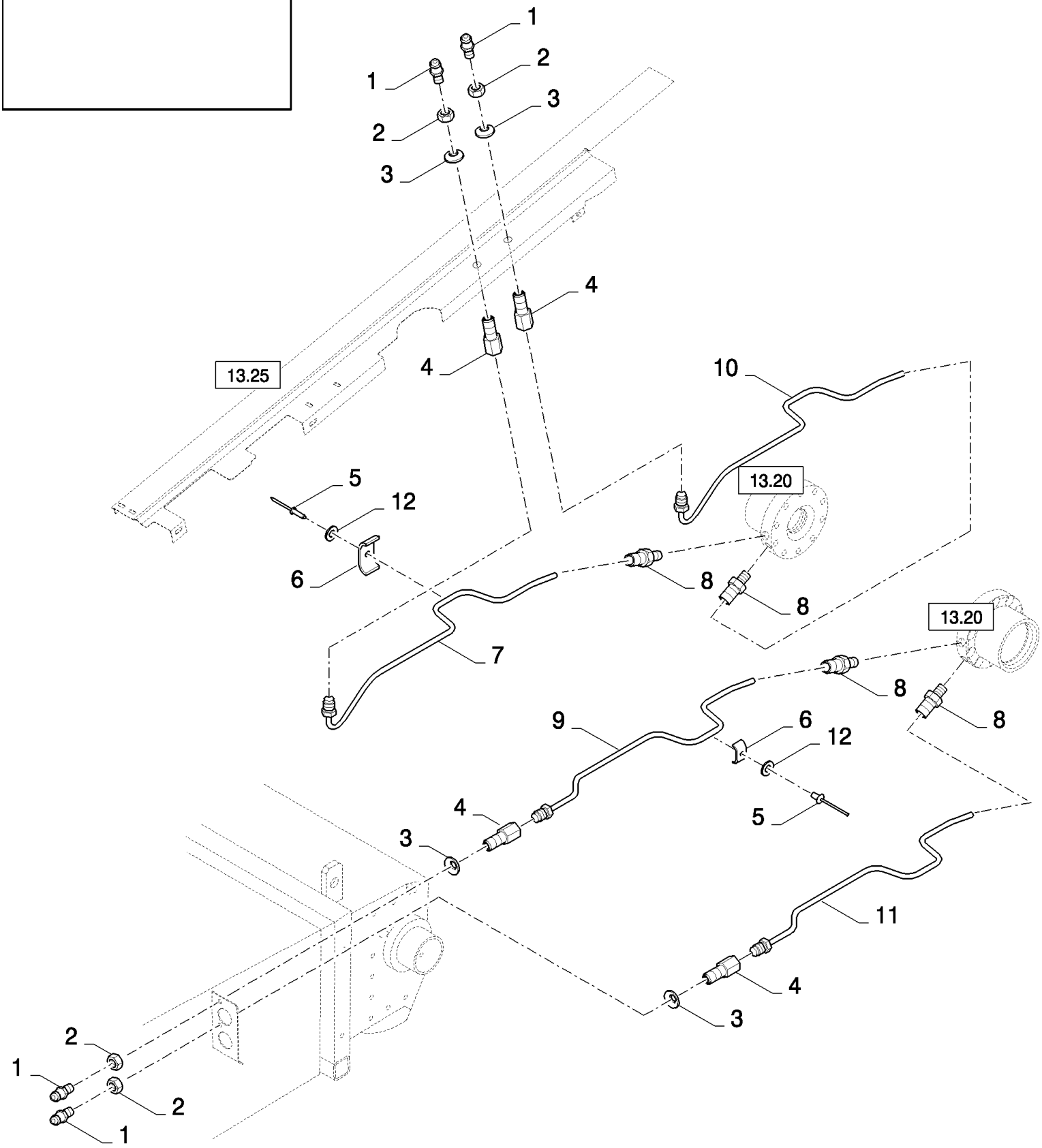

CX880 COMBINE - BASE UNIT (2/01-)

13.21(01) STRAW ELEVATOR, UPPER SHAFT GREASING

ссылка	Номер детали	Кол-во	Описание
1	321204	4	NIPPLE, LUBE, M6 x 1, 16mm lg,
2	100016	4	NUT, M10, Cl 8,
3	140045	4	WASHER, SPRING, Belleville, M10,
4	9510459	4	CONNECTOR, HYD., , BSN C285
4	84817004	4	CONNECTOR, HYD., , ASN D286
5	80445395	2	RIVET,
6	336760	2	CLAMP, , BSN C285
6	84814933	2	CLAMP, , ASN D286
7	84437057	1	TUBE, RH
8	159338	4	CONNECTOR, HYD.,
9	84437053	1	TUBE, LH
10	84437059	1	TUBE, RH
11	84437048	1	TUBE, LH
12	140014	2	WASHER, M5 x 10 x 1,

13.22(01) ANTIWRAP SHIELDS

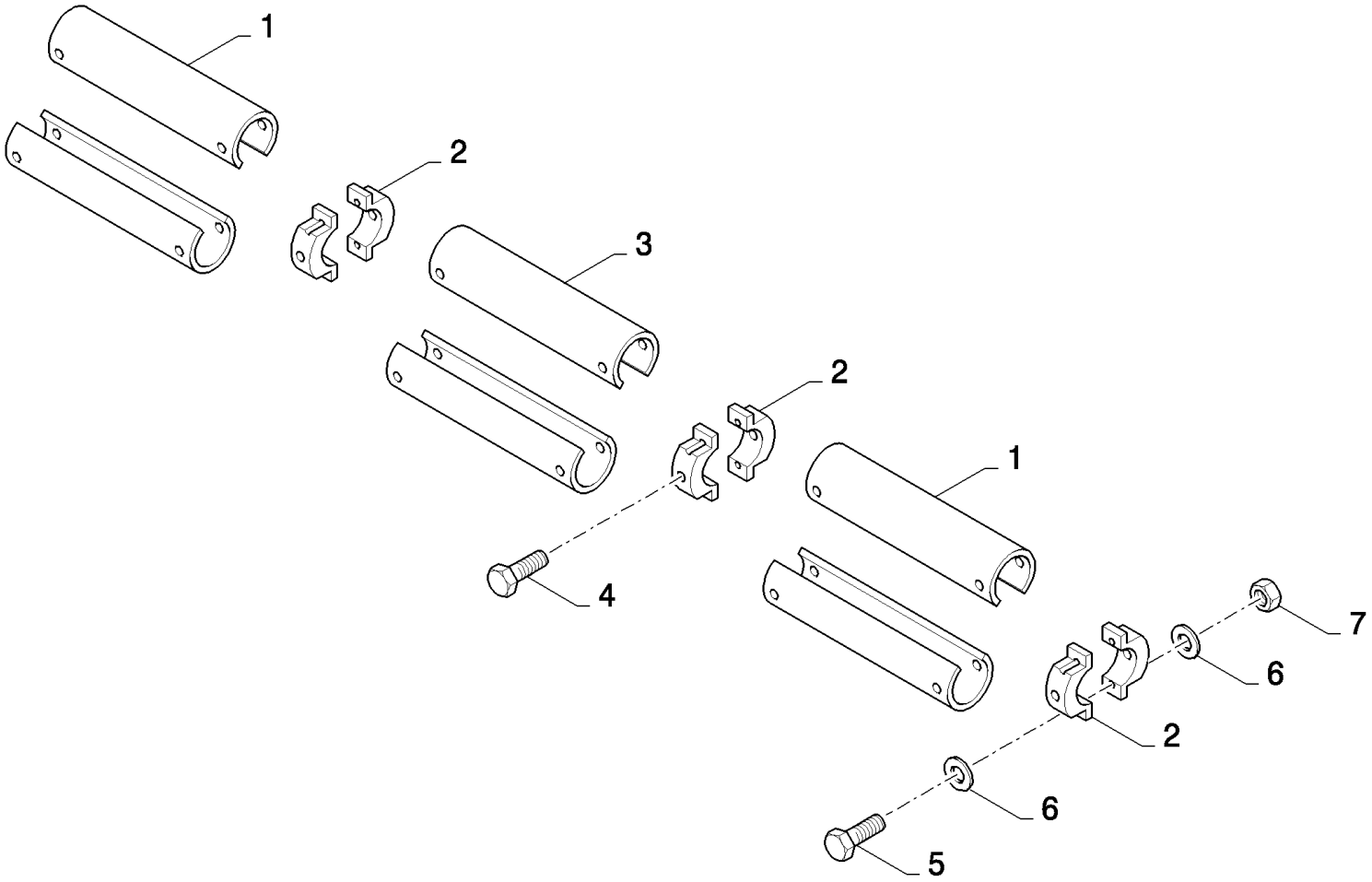

CX880 COMBINE - BASE UNIT (2/01-)

13.22(01) ANTIWRAP SHIELDS

ссылка	Номер детали	Кол-во	Описание
1	84022121	4	SHIELD, , FOR CX820, CX840, CX860, CX880 ONLY
1	449977	4	SHIELD, , FOR CX720, CX740, CX760, CX780 ONLY
2	9513095	AR	CLAMP,
3	84022120	2	SHIELD, , FOR CX820, CX840, CX860, CX880 ONLY
4	62087	AR	SCREW,
5	386045	AR	BOLT, Hex, M8 x 45, 8.8,
6	378243	AR	WASHER, M8,
7	86629542	AR	NUT, LOCK, M8 x 1.25, Cl 8,

13.23(01) HYDRAULIC DRIVEN REVERSING SYSTEM

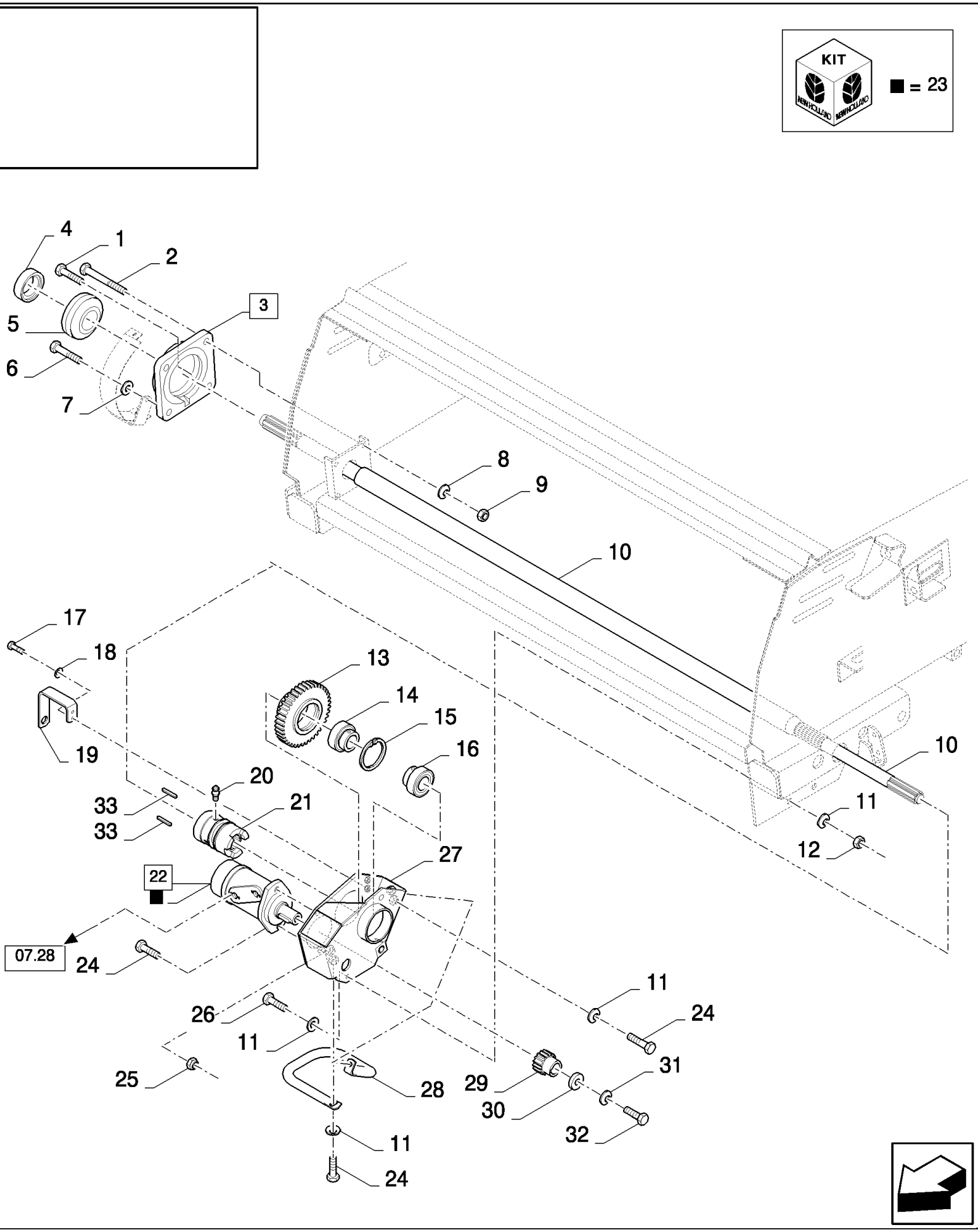

CX880 COMBINE - BASE UNIT (2/01-)

13.23(01) HYDRAULIC DRIVEN REVERSING SYSTEM

ссылка	Номер детали	Кол-во	Описание
1	120090	1	SCREW, Hex, M16 x 50, 8.8,
2	43874	2	SCREW, Hex, M16 x 110, 8.8,
3	84077933	1	BEARING ASSY, (4,5)
3	87330188	1	HOUSING, BEARING, , FOR SMALL GRAIN ONLY, ASN D408
4	84004717	1	BEARING ASSY,
4	80563733	1	COLLAR, , FOR SMALL GRAIN ONLY, ASN D408
5	84004716	1	BEARING ASSY,
5	89833704	1	BEARING, BALL, , FOR SMALL GRAIN ONLY, ASN D408
6	120091	1	BOLT, Hex, M16 x 60, 8.8,
7	378246	1	WASHER, 16MM
8	140048	4	WASHER, SPRING, Belleville, M16,
9	100020	4	NUT, M16, Cl 8,
10	84071671	1	SHAFT, , FOR LATERAL FLOTATION ONLY, FOR CX820, CX840, CX860, CX880 ONLY, FOR FRONT FACE ADJUSTMENT WITH LF ONLY, BSN C439
10	84455197	1	SHAFT, , FOR FRONT FACE ADJUSTMENT WITH LF ONLY, FOR CX820, CX840, CX860, CX880 ONLY, FOR LATERAL FLOTATION ONLY, FOR 4HB ONLY, ASN D440
10	84071671	1	SHAFT, , FOR LATERAL FLOTATION ONLY, FOR CX820, CX840, CX860, CX880 ONLY, FOR FRONT FACE ADJUSTMENT WITH LF ONLY, FOR 2HB ONLY, BSN C481
10	84460047	1	COUNTERSHAFT, , FOR 2HB ONLY, FOR FRONT FACE ADJUSTMENT WITH LF ONLY, FOR CX820, CX840, CX860, CX880 ONLY, FOR LATERAL FLOTATION ONLY, ASN D482
10	84071891	1	SHAFT, , FOR LATERAL FLOTATION ONLY, FOR FRONT FACE ADJUSTMENT WITH LF ONLY, FOR CX720, CX740, CX760, CX780 ONLY, BSN C347
10	84447198	1	SHAFT, , FOR CX720, CX740, CX760, CX780 ONLY, FOR FRONT FACE ADJUSTMENT WITH LF ONLY, FOR LATERAL FLOTATION ONLY, BSN F348439
10	84457563	1	SHAFT, , FOR LATERAL FLOTATION ONLY, FOR 4HB ONLY, FOR FRONT FACE ADJUSTMENT WITH LF ONLY, FOR CX720, CX740, CX760, CX780 ONLY, ASN D440
10	84447198	1	SHAFT, , FOR CX720, CX740, CX760, CX780 ONLY, FOR FRONT FACE ADJUSTMENT WITH LF ONLY, FOR 2HB ONLY, FOR LATERAL FLOTATION ONLY, BSN C481
10	84460016	1	COUNTERSHAFT, , FOR LATERAL FLOTATION ONLY, FOR 2HB ONLY, FOR FRONT FACE ADJUSTMENT WITH LF ONLY, FOR CX720, CX740, CX760, CX780 ONLY, ASN D482
11	140045	8	WASHER, SPRING, Belleville, M10,
12	100016	2	NUT, M10, Cl 8,
13	84069717	1	GEAR,
14	84045378	1	BEARING ASSY,
15	80300633	1	RING, SNAP,
16	412441	1	BEARING, BALL,
17	120100	2	BOLT, Hex, M6 x 20, 8.8,
18	322357	2	WASHER, SPRING, Belleville, M6,
19	84076489	1	SUPPORT,
20	150021	3	NIPPLE, LUBE,
21	84071586	1	ELEMENT, JOINING,
21	84460112	1	ELEMENT, JOINING, , FOR SMALL GRAIN ONLY, ASN D482
22	84334106	1	MOTOR, HYDRAULIC, (23)
23	84334111	1	KIT, SEALS,

13.23(01) HYDRAULIC DRIVEN REVERSING SYSTEM

ссылка	Номер детали	Кол-во	Описание
24	86629541	2	BOLT, Hex, M12 x 40, 8.8, Full Thd,
25	100038	2	NUT, M12 x 1.75, Cl 8,
26	43140	6	BOLT, Hex, M10 x 30, 8.8, Full Thd,
27	84069598	1	SUPPORT,
28	84072915	1	SUPPORT,
29	9507932	1	GEAR,
30	9507949	1	WASHER,
31	322358	1	WASHER, SPRING, Belleville, M8,
32	43127	1	BOLT, Hex, M8 x 25, 8.8,
33	80170016	2	KEY, , FOR SMALL GRAIN ONLY, ASN D482

13.24(01) HYDRAULIC DRIVEN REVERSING SYSTEM

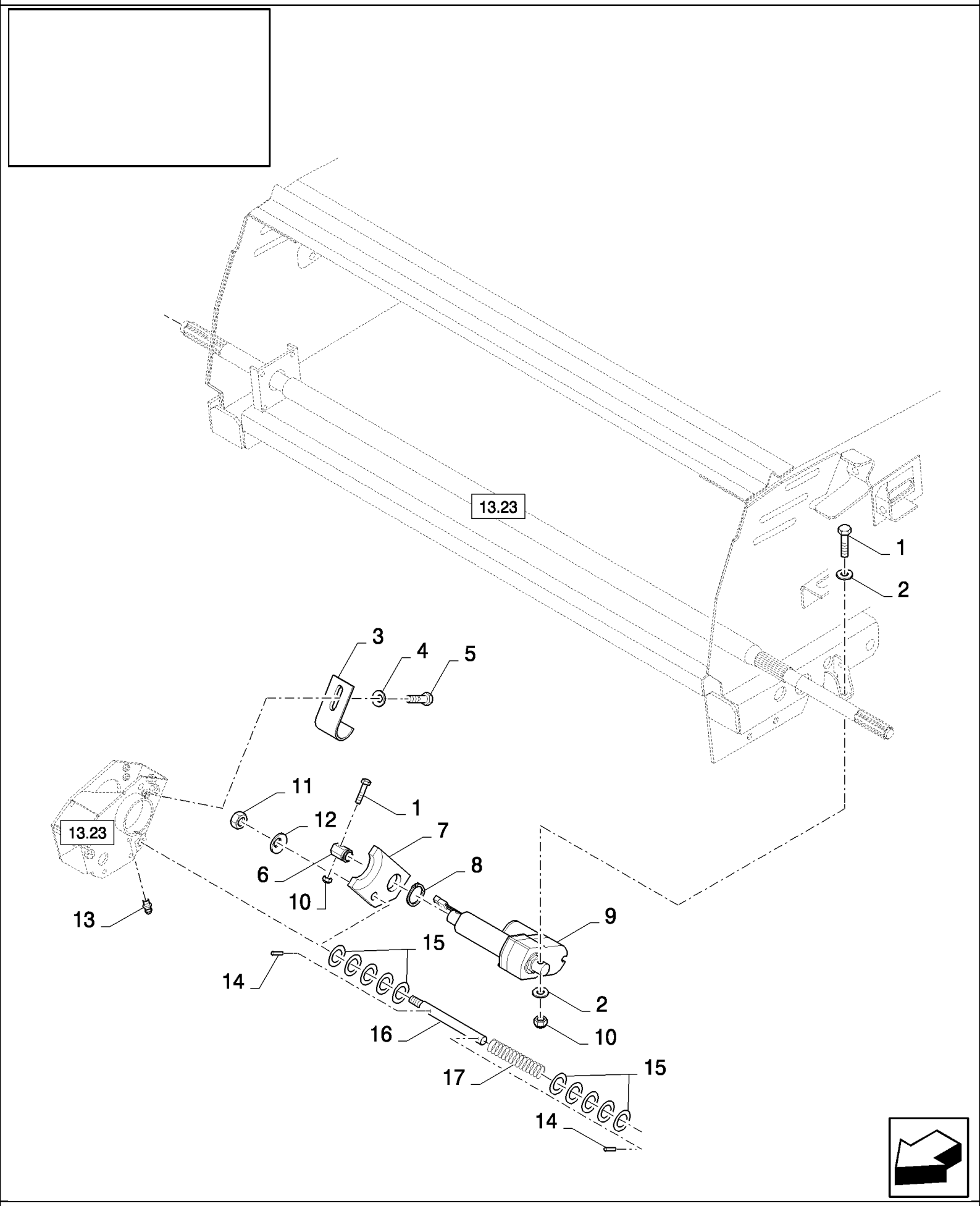

CX880 COMBINE - BASE UNIT (2/01-)

13.24(01) HYDRAULIC DRIVEN REVERSING SYSTEM

ссылка	Номер детали	Кол-во	Описание
1	9706693	2	BOLT, Hex, M12 x 60, 8.8,
2	378245	2	WASHER, M12,
3	84072914	1	BRACKET,
4	140045	1	WASHER, SPRING, Belleville, M10,
5	43140	1	BOLT, Hex, M10 x 30, 8.8, Full Thd,
6	9508061	1	BUSHING,
7	9508056	1	FORK,
8	370006	1	RING, SNAP,
9	86579533	1	ACTUATOR,
10	100038	2	NUT, M12 x 1.75, Cl 8,
11	100020	1	NUT, M16, Cl 8,
12	140048	1	WASHER, SPRING, Belleville, M16,
13	321204	1	NIPPLE, LUBE, M6 x 1, 16mm lg,
14	9511051	2	PIN, LOCK, M6 x 30, Slotted, Spring, Slot, M6 OD x 30 L
15	443434	10	WASHER,
16	84015536	1	SHAFT,
17	394871	1	SPRING,

13.25(01) STRAW ELEVATOR , SHIELDS RH

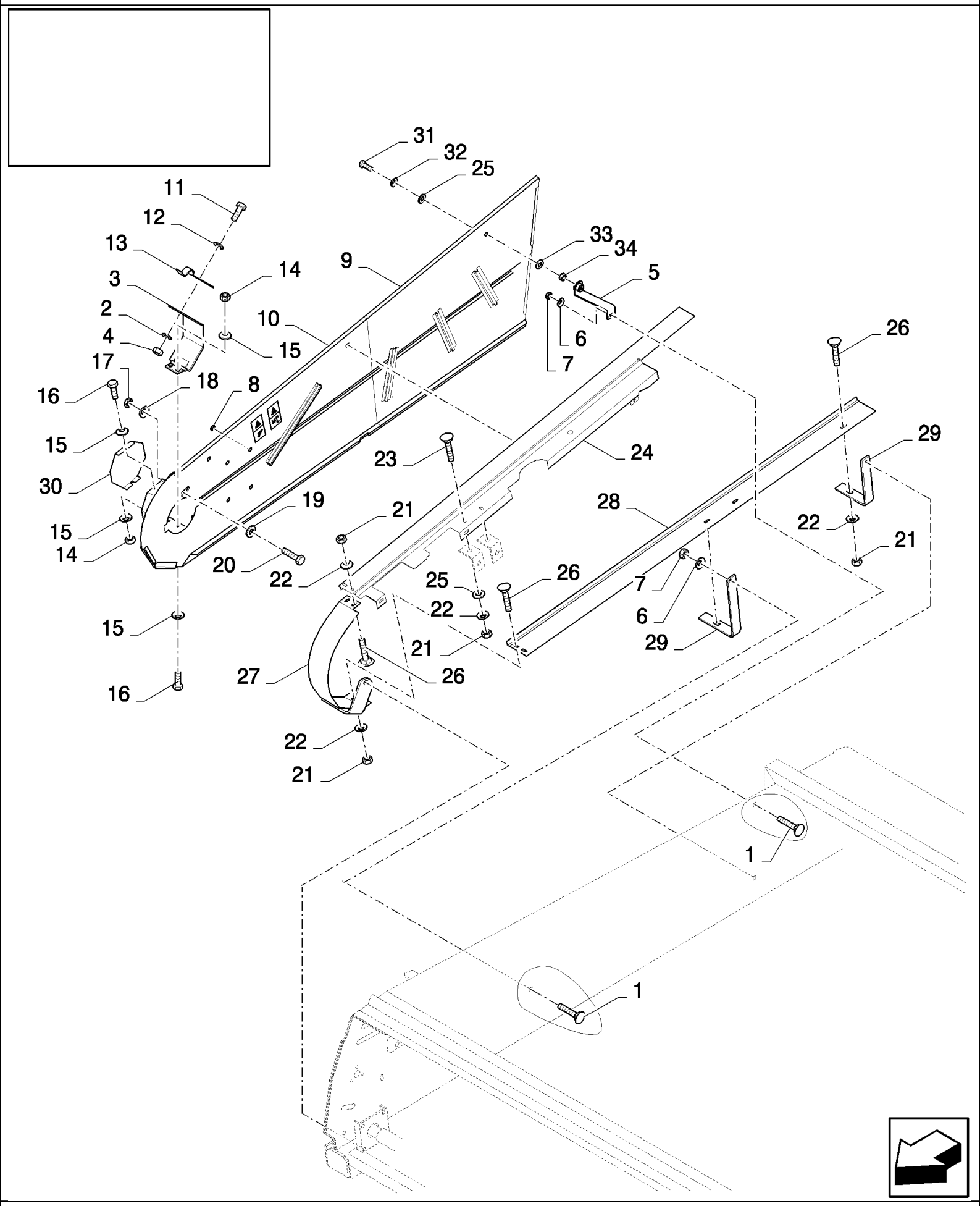

CX880 COMBINE - BASE UNIT (2/01-)

13.25(01) STRAW ELEVATOR , SHIELDS RH

ссылка	Номер детали	Кол-во	Описание
1	V43471	3	BOLT, M10x20
2	322356	4	WASHER, 5MM
3	84018415	1	SHIELD,
4	86508813	4	NUT, M5, Cl 8,
5	84435627	1	SUPPORT,
6	140045	6	WASHER, SPRING, Belleville, M10,
7	100016	6	NUT, M10, Cl 8,
8	84435001	4	PLUG,
9	84433741	1	SHIELD,
10	84071254	1	SHIELD, , BSN C305
10	84439215	1	SHIELD, , ASN D306
11	300806	2	SCREW, Hex, M5 x 10, 8.8, Full Thd,
12	140014	2	WASHER, M5 x 10 x 1,
13	9801069	1	LATCH,
14	15896221	4	NUT, M6, Cl 10,
15	322357	8	WASHER, SPRING, Belleville, M6,
16	378056	4	BOLT, Hex, M6 x 10, 8.8, Full Thd,
17	9706685	1	NUT, M12, Cl 8,
18	140046	1	WASHER, Belleville, M12,
19	378245	1	WASHER, M12,
20	309086	1	SCREW, Hex, M12 x 60, 8.8, Full Thd,
21	89706690	8	NUT, M8, Cl 8,
22	322358	8	WASHER, SPRING, Belleville, M8,
23	43465	2	BOLT, CARRIAGE, Short NK, M8 x 30, Cl8.8, Full Thd,
24	84435614	1	SHIELD, , FOR FRONT FACE ADJUSTMENT WITH LF ONLY
24	84437001	1	SHIELD, , FOR LATERAL FLOTATION ONLY
25	140041	6	WASHER, M8 x 28 x 3,
26	86507486	6	BOLT, CARRIAGE, Short NK, M8 x 20, Cl8.8, Full Thd,
27	84069605	1	SHIELD, , BSN C305
27	84439237	1	SHIELD, , ASN D306
28	84069601	1	SHIELD, , BSN C305
28	84439198	1	SHIELD, , ASN D306
29	84069602	2	SUPPORT,
30	84071251	1	COVER,
31	43128	4	BOLT, Hex, M8 x 30, 8.8,
32	412650	4	WASHER, Belleville, M8,
33	378243	4	WASHER, M8,
34	86629542	4	NUT, LOCK, M8 x 1.25, Cl 8,

13.26(01) STRAW ELEVATOR , SHIELDS LH

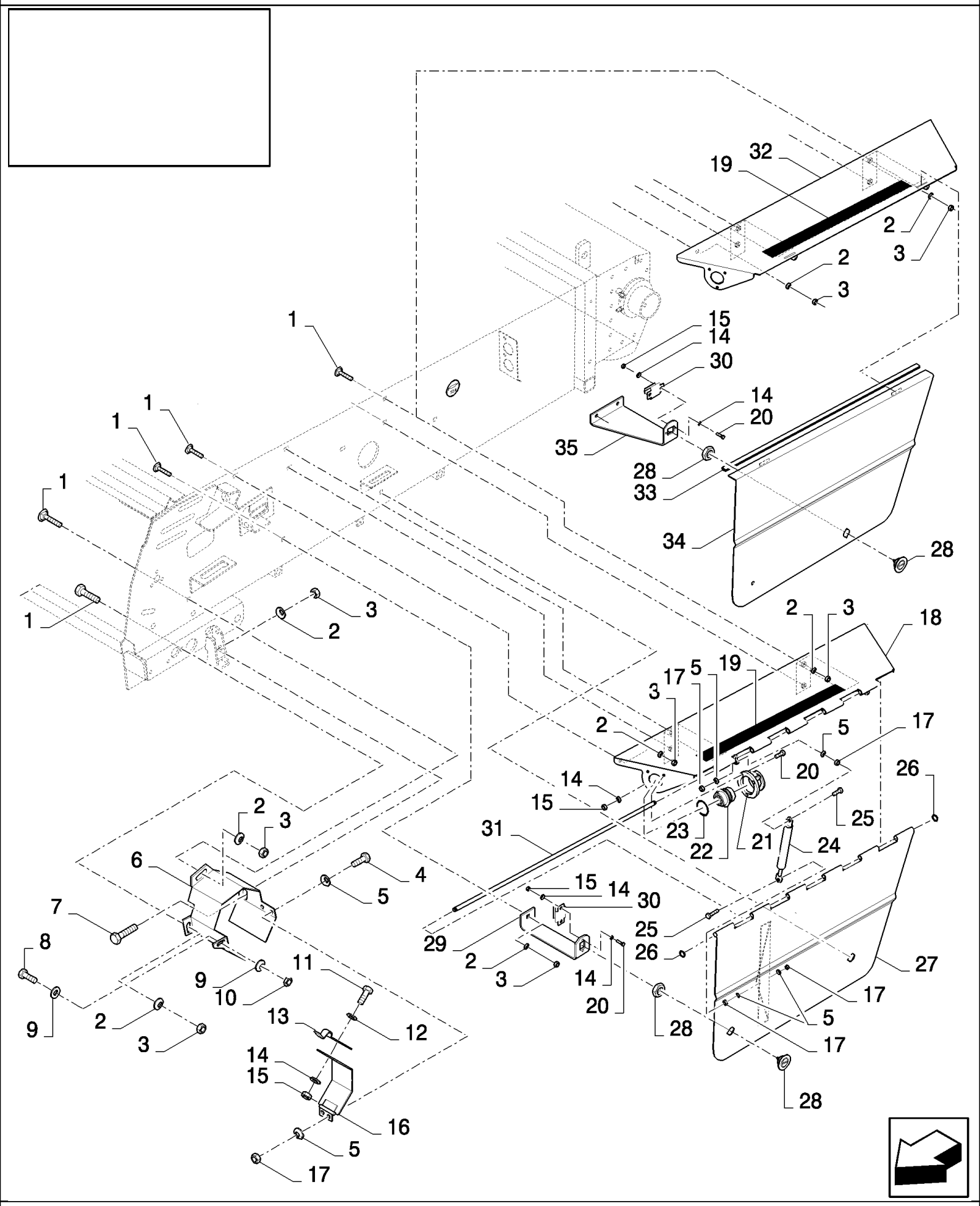

CX880 COMBINE - BASE UNIT (2/01-)

13.26(01) STRAW ELEVATOR , SHIELDS LH

ссылка	Номер детали	Кол-во	Описание
1	V43471	9	BOLT, M10x20
2	140045	10	WASHER, SPRING, Belleville, M10,
3	100016	10	NUT, M10, Cl 8,
4	378056	2	BOLT, Hex, M6 x 10, 8.8, Full Thd,
5	322357	14	WASHER, SPRING, Belleville, M6,
6	84071248	1	SHIELD, , BSN C245
6	84433799	1	SHIELD, , BSN F246305
6	84447463	1	SHIELD, , ASN D306
7	43138	1	SCREW, Hex, M10 x 20, 8.8, Full Thd,
8	9706687	1	SCREW, Hex, M12 x 30, 8.8,
9	86588502	2	WASHER, M12 x 25 x 3, 12MM
10	323238	1	NUT, Thin, M12 x 1.75, Cl 05, M12
11	300806	2	SCREW, Hex, M5 x 10, 8.8, Full Thd,
12	140014	2	WASHER, M5 x 10 x 1,
13	9801069	1	LATCH,
14	322356	13	WASHER, 5MM
15	86508813	9	NUT, M5, Cl 8,
16	84018415	1	SHIELD,
17	15896221	8	NUT, M6, Cl 10,
18	84432621	1	SHIELD, , BSN C285
19	401502	AR	STRIP, ANTI-SKID, 51mm x 18.3 Roll - Cut to Size
20	120098	7	BOLT, Hex, M5 x 20, 8.8, Full Thd,
21	86606228	1	COVER, , BSN C285
22	84100277	1	DUST CAP, , BSN C285
23	84037188	1	O-RING, , BSN C285
24	84435424	1	SHOCK ABSORBER, , BSN C285
25	86977786	2	BOLT, Hex, M6 x 25, 8.8,
26	83991509	2	RING, SNAP,
27	84434073	1	SHIELD, , BSN C285
28	86512919	2	LATCH,
29	84432622	2	SUPPORT, , BSN C285
30	9840986	2	CLIP,
31	84432623	1	SHAFT, , BSN C285
32	84440093	1	SHIELD, , ASN D286
33	80401223	1	PROFILE, , ASN D286
34	84440105	1	SHIELD, , ASN D286
35	84440106	1	SUPPORT, , BSN F286499
35	87393515	1	SUPPORT, , ASN D500

13.27(01) ELEVATOR SAFETY DEVICES, GERMANY

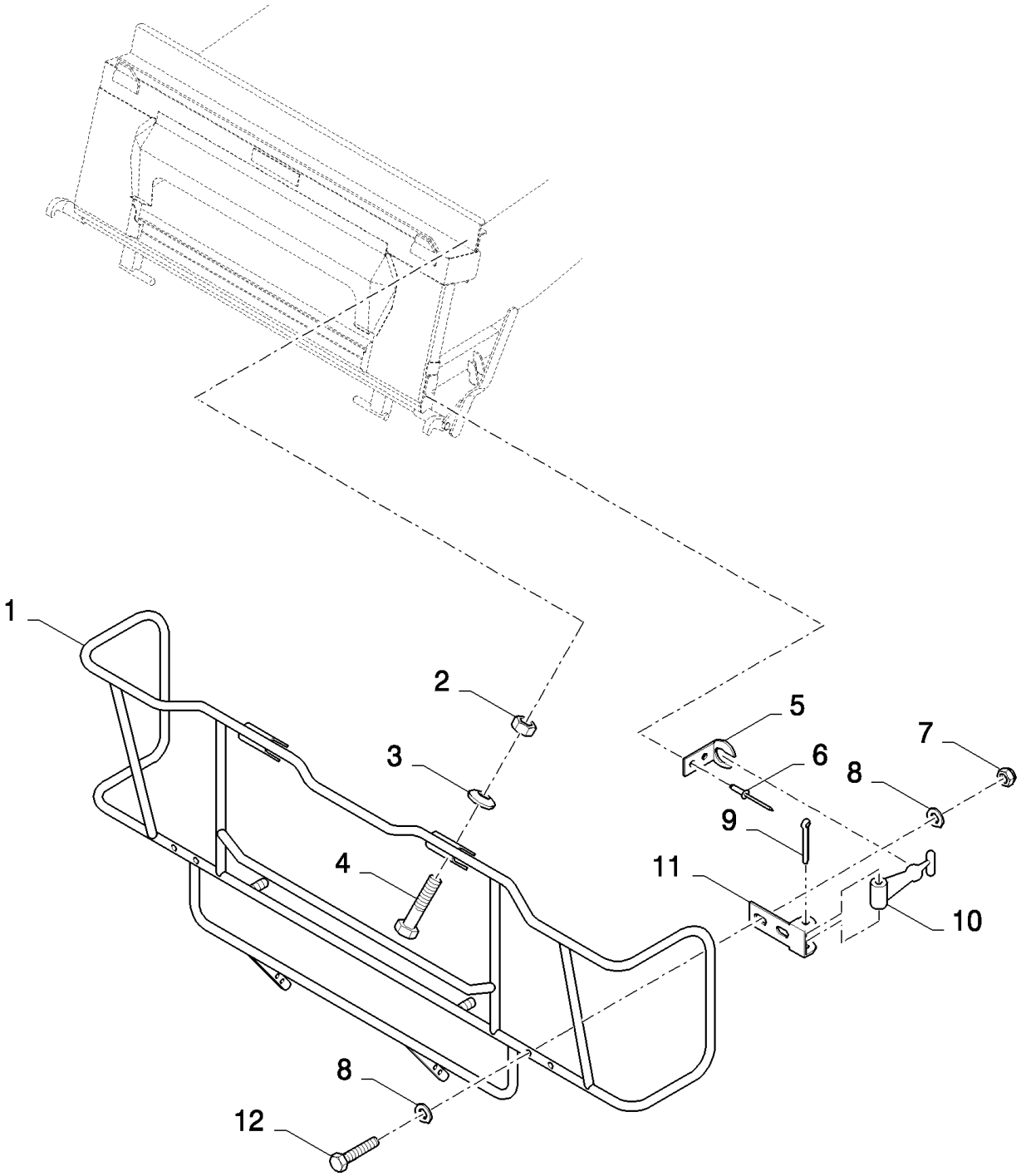

CX880 COMBINE - BASE UNIT (2/01-)

13.27(01) ELEVATOR SAFETY DEVICES, GERMANY

ссылка	Номер детали	Кол-во	Описание
1	419643	1	SHIELD,
2	89706690	2	NUT, M8, Cl 8,
3	322358	2	WASHER, SPRING, Belleville, M8,
4	120061	2	BOLT, Hex, M8 x 60, 8.8,
5	453857	2	CLIP,
6	NS	4	NOT SERVICED, RIVET
7	353308	4	NUT, M6 x 1, Cl 8,
8	86588450	8	WASHER, M6,
9	300416	2	PIN, SPLIT (COTTER), M4 x 50,
10	353067	2	HANDLE,
11	350918	2	BRACKET,
12	120102	4	SCREW, Hex, M6 x 40, 8.8, Full Thd,

13.28(01) SAFETY DEVICES ON ELEVATOR CYLINDERS - ITALY - C305

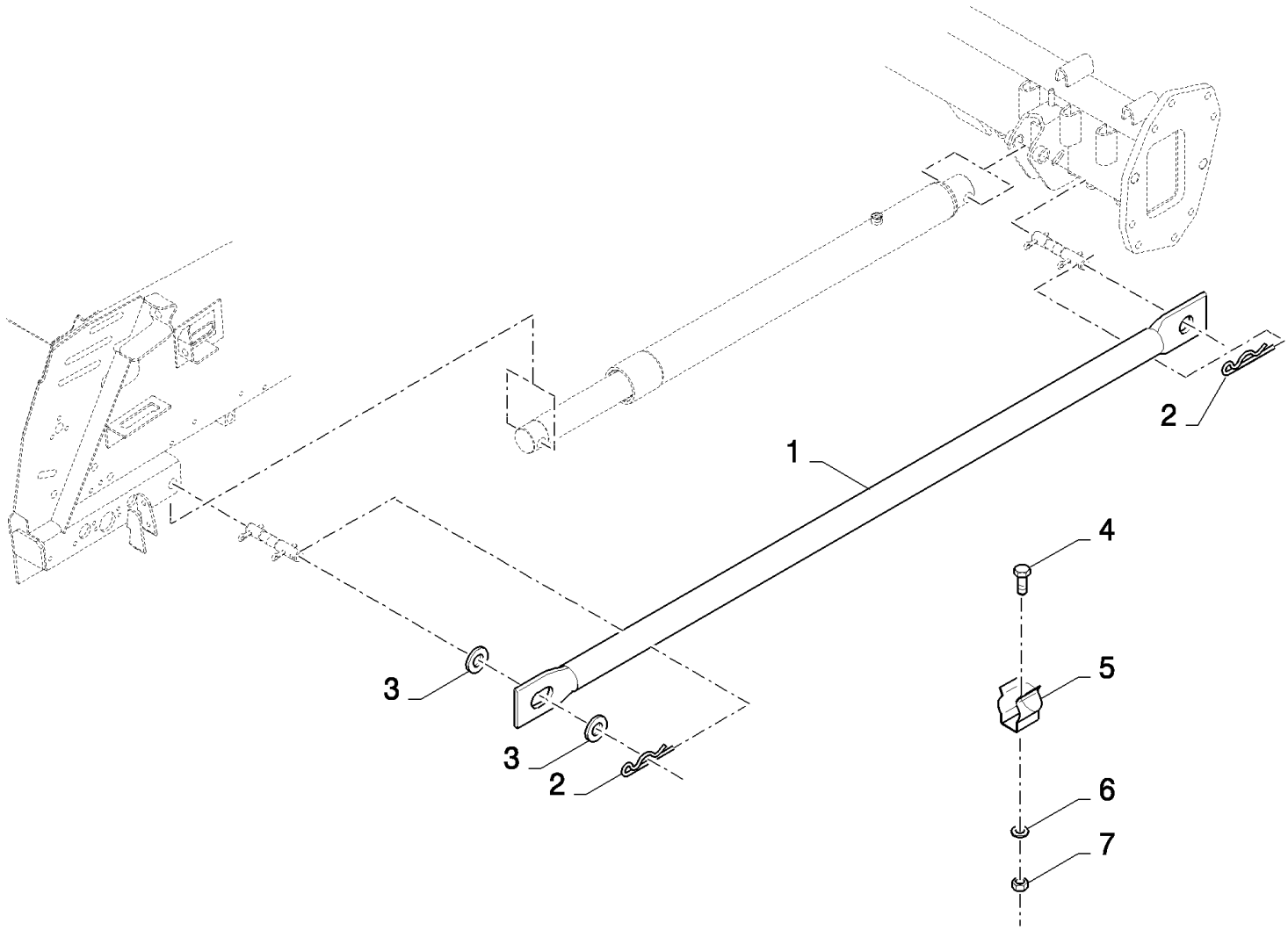

13.28(01) SAFETY DEVICES ON ELEVATOR CYLINDERS - ITALY - C305

ссылка	Номер детали	Кол-во	Описание
1	84431384	1	SUPPORT, , FOR CORN HEADER ONLY
1	84431394	1	SUPPORT, , FOR GRAIN HEADER ONLY
2	180043	2	PIN, SPLIT (COTTER),
3	84814901	2	WASHER,
4	378056	2	BOLT, Hex, M6 x 10, 8.8, Full Thd,
5	84042204	2	CLAMP,
6	322357	2	WASHER, SPRING, Belleville, M6,
7	15896221	2	NUT, M6, Cl 10,

13.29(01) WHEEL WEDGE

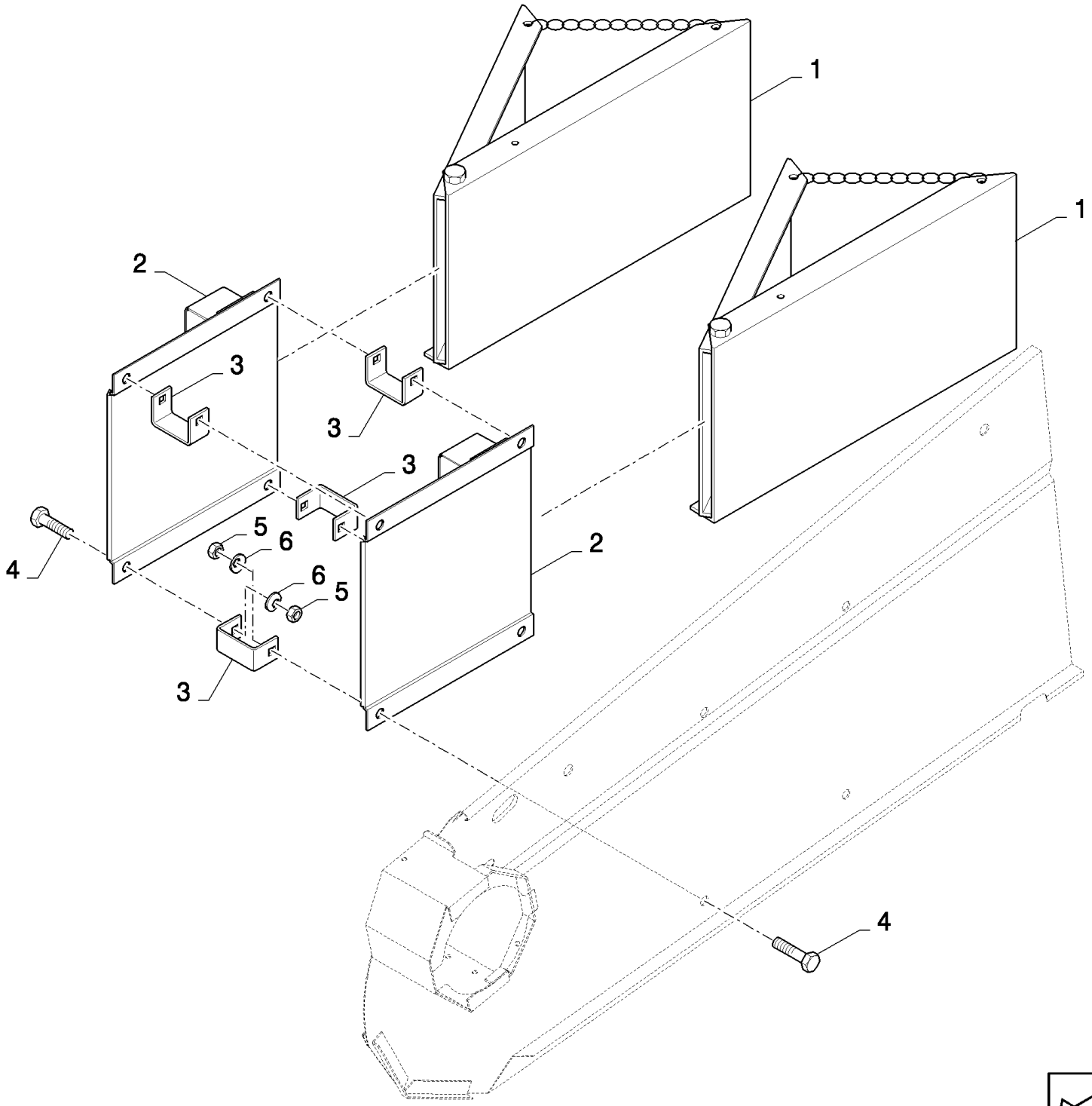

CX880 COMBINE - BASE UNIT (2/01-)

13.29(01) WHEEL WEDGE

ссылка	Номер детали	Кол-во	Описание
1	452769	2	WHEEL CHOCK,
2	452770	2	CLAMP,
3	84018986	4	SUPPORT,
4	43138	8	SCREW, Hex, M10 x 20, 8.8, Full Thd,
5	100016	8	NUT, M10, Cl 8,
6	140045	8	WASHER, SPRING, Belleville, M10,

THRESHING	**BATTAGE**	**TRILLA**	**TÆRSKNING**
TREBBIATURA	**DRUSCH**	**DEBULHA**	**DORSEN**

SEC. 14

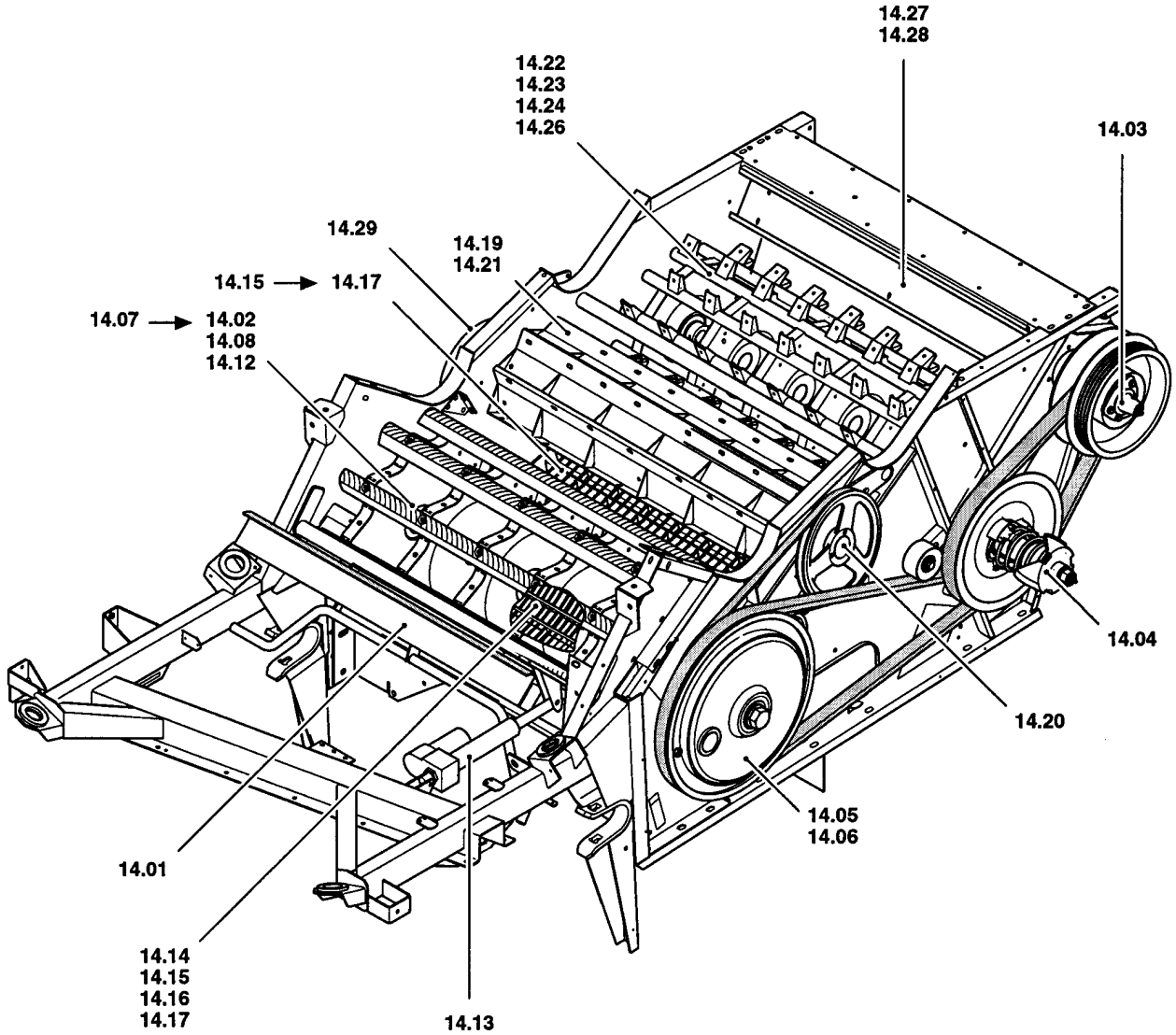

ссылка	Номер детали	Кол-во	Описание

14.01(01) STONE TRAP AND COVER PLATE

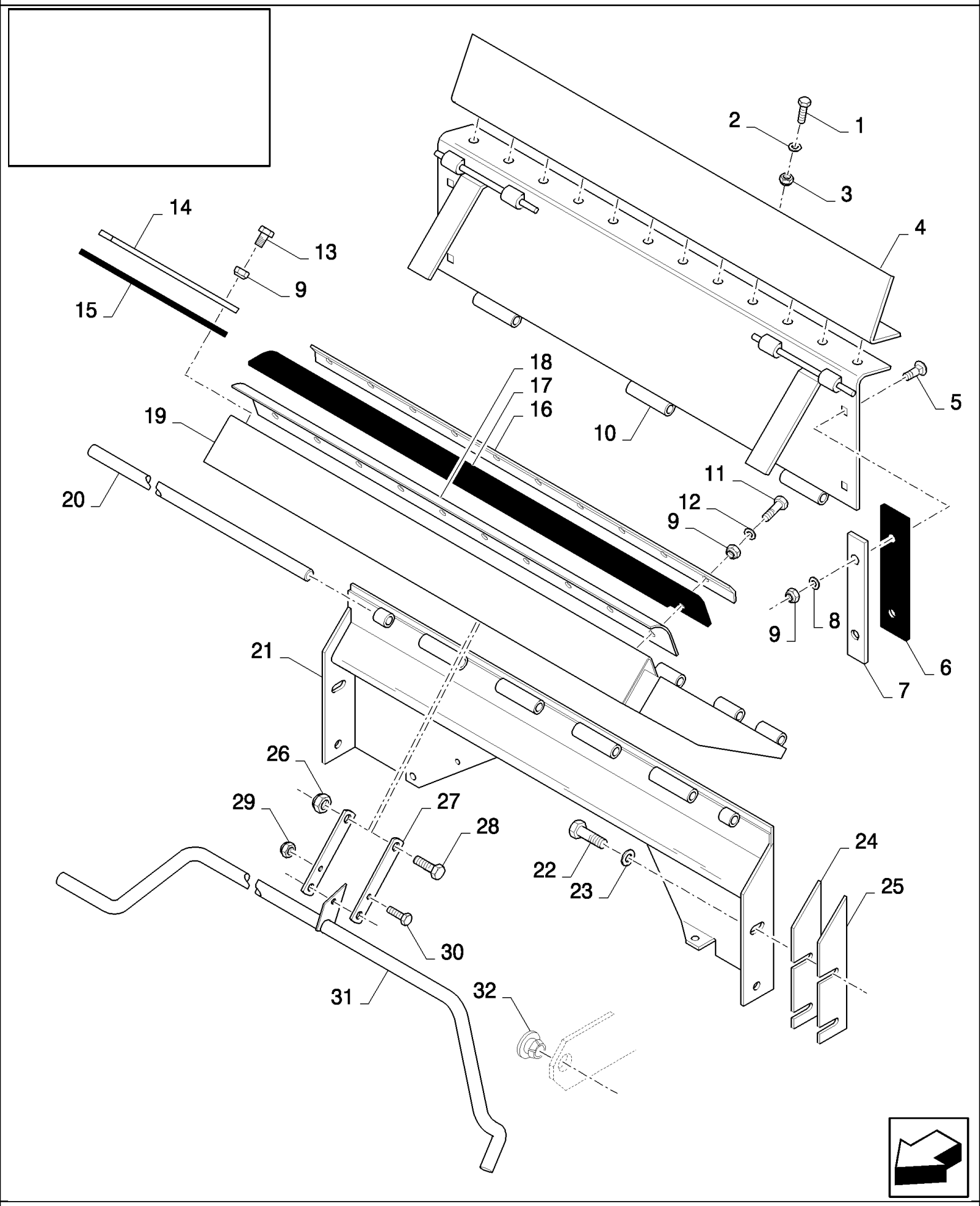

CX880 COMBINE - BASE UNIT (2/01-)

14.01(01) STONE TRAP AND COVER PLATE

ссылка	Номер детали	Кол-во	Описание
1	120104	10	SCREW, Hex, M8 x 20, 8.8,
2	412650	20	WASHER, Belleville, M8,
3	89706690	10	NUT, M8, Cl 8,
4	84072554	1	PLATE, , FOR CX820, CX840, CX860, CX880 ONLY
4	84077666	1	PLATE, , FOR CX720, CX740, CX760, CX780 ONLY
5	9706703	4	BOLT, CARRIAGE, Short NK, M6 x 20, Cl8.8, Full Thd,
6	84061492	2	CANVAS,
7	84072614	2	PLATE, FIXING,
8	140015	16	WASHER, 6MM
9	353308	20	NUT, M6 x 1, Cl 8,
10	84069840	1	STONE TRAP, , FOR CX820, CX840, CX860, CX880 ONLY
10	84077678	1	STONE TRAP, , FOR CX720, CX740, CX760, CX780 ONLY
11	86977786	10	BOLT, Hex, M6 x 25, 8.8,
12	322357	20	WASHER, SPRING, Belleville, M6,
13	120100	6	BOLT, Hex, M6 x 20, 8.8,
14	84069844	2	PLATE, FIXING,
15	84061702	2	CANVAS,
16	84000704	1	STRIP, , FOR CX820, CX840, CX860, CX880 ONLY
16	84320380	1	PLATE, FIXING, , FOR CX720, CX740, CX760, CX780 ONLY
17	84431029	1	CANVAS, , FOR CX820, CX840, CX860, CX880 ONLY
17	84434357	1	CANVAS, , FOR CX720, CX740, CX760, CX780 ONLY
18	9813936	1	CANVAS, , FOR CX820, CX840, CX860, CX880 ONLY
18	9813903	1	CANVAS, , FOR CX720, CX740, CX760, CX780 ONLY
19	84433575	1	COVER, , FOR CX820, CX840, CX860, CX880 ONLY
19	84434356	1	COVER, , FOR CX720, CX740, CX760, CX780 ONLY
20	390376	1	ROD, , FOR CX820, CX840, CX860, CX880 ONLY
20	394608	1	ROD, , FOR CX720, CX740, CX760, CX780 ONLY
21	84069865	1	COVER, , FOR CX820, CX840, CX860, CX880 ONLY
21	84077711	1	COVER, , FOR CX720, CX740, CX760, CX780 ONLY
22	43139	4	SCREW, Hex, M10 x 25, 8.8, Full Thd, M10x25
23	140045	4	WASHER, SPRING, Belleville, M10,
24	84072615	AR	SHIM,
25	84071514	AR	SHIM,
26	100038	4	NUT, M12 x 1.75, Cl 8,
27	84072553	4	PLATE,
28	9706687	4	SCREW, Hex, M12 x 30, 8.8,
29	86629542	2	NUT, LOCK, M8 x 1.25, Cl 8,
30	43127	2	BOLT, Hex, M8 x 25, 8.8,
31	84433610	1	HANDLE, , FOR CX820, CX840, CX860, CX880 ONLY
31	84434358	2	HANDLE, , FOR CX720, CX740, CX760, CX780 ONLY
32	84072490	2	BUSHING,

14.02(01) SPRING LOADED DUSTPLATE

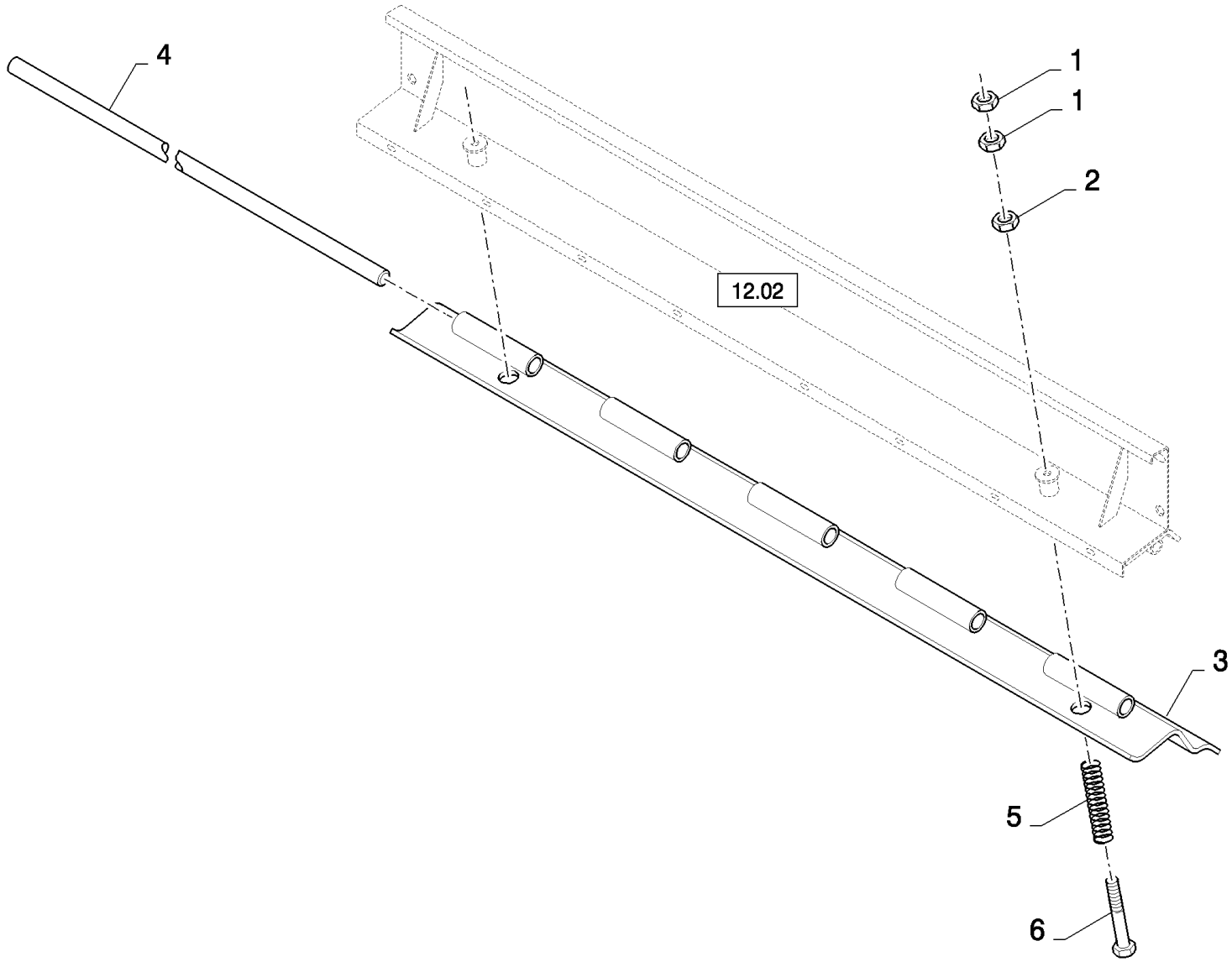

CX880 COMBINE - BASE UNIT (2/01-)

14.02(01) SPRING LOADED DUSTPLATE

ссылка	Номер детали	Кол-во	Описание
1	100016	4	NUT, M10, Cl 8,
2	86514720	2	NUT, LOCK, M10
3	84014451	1	COVER, , FOR CX820, CX840, CX860, CX880 ONLY
3	84015568	1	COVER, , FOR CX720, CX740, CX760, CX780 ONLY
4	390376	1	ROD, , FOR CX820, CX840, CX860, CX880 ONLY
4	394608	1	ROD, , FOR CX720, CX740, CX760, CX780 ONLY
5	180069	2	SPRING,
6	120117	2	BOLT, Hex, M10 x 110, 8.8, Full Thd,

14.03(01) DRUM VARIATOR

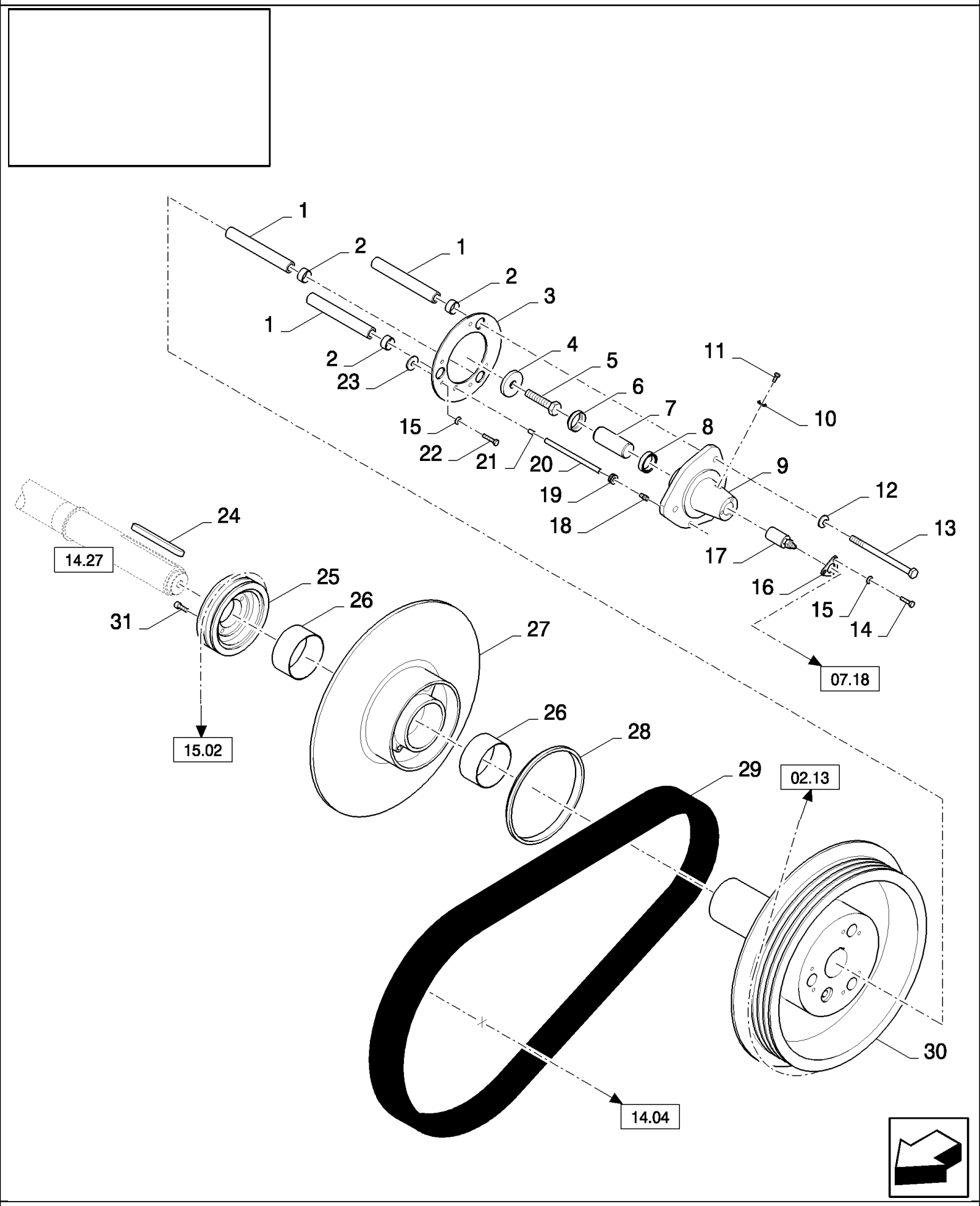

CX880 COMBINE - BASE UNIT (2/01-)

14.03(01) DRUM VARIATOR

ссылка	Номер детали	Кол-во	Описание
1	84035798	3	BUSHING, THREADED,
2	420760	3	BUSHING,
3	84069946	1	RING,
4	440997	1	WASHER,
5	120090	1	SCREW, Hex, M16 x 50, 8.8,
6	84035899	1	SEAL, , BSN C479
6	84462235	1	SEAL, , ASN D480
7	84035830	1	PIN, , BSN C479
7	84461966	1	TAP, , ASN D480
8	84035900	1	SEAL, , BSN C479
8	84462236	1	SEAL, , ASN D480
9	84069944	1	HUB, , BSN C479
9	84461973	1	HUB, , ASN D480
10	373816	1	WASHER, COPPER,
11	378056	1	BOLT, Hex, M6 x 10, 8.8, Full Thd,
12	140046	3	WASHER, Belleville, M12,
13	336383	3	BOLT, Hex, M12 x 180, 8.8, , BSN C237
13	84074911	3	BOLT, Hex, M12 x 200, 12.9, M12x200, ASN D238
14	120104	3	SCREW, Hex, M8 x 20, 8.8,
15	322358	9	WASHER, SPRING, Belleville, M8,
16	80449425	1	DISC,
17	690658	1	COUPLING,
18	321204	1	NIPPLE, LUBE, M6 x 1, 16mm lg,
19	334696	1	GROMMET,
20	84071278	1	TUBE,
21	84334270	1	PIN, , BSN C237
23	84052057	1	WASHER,
24	84057235	1	KEY,
25	84069941	1	PULLEY,
26	84015298	2	SLEEVE, , BSN C237
27	84069942	1	DISC, , BSN C237
27	84440296	1	DISC, , ASN D238
28	84057516	1	SEAL,
29	84035748	1	BELT, TRANSMISSION,
30	84434589	1	PULLEY,
31	120163	5	SCREW, Hex Soc Hd, M8 x 25, 8.8,
22	16043224	6	BOLT, Hex, M8 x 16, 8.8, Full Thd,

14.04(01) DRUM VARIATOR

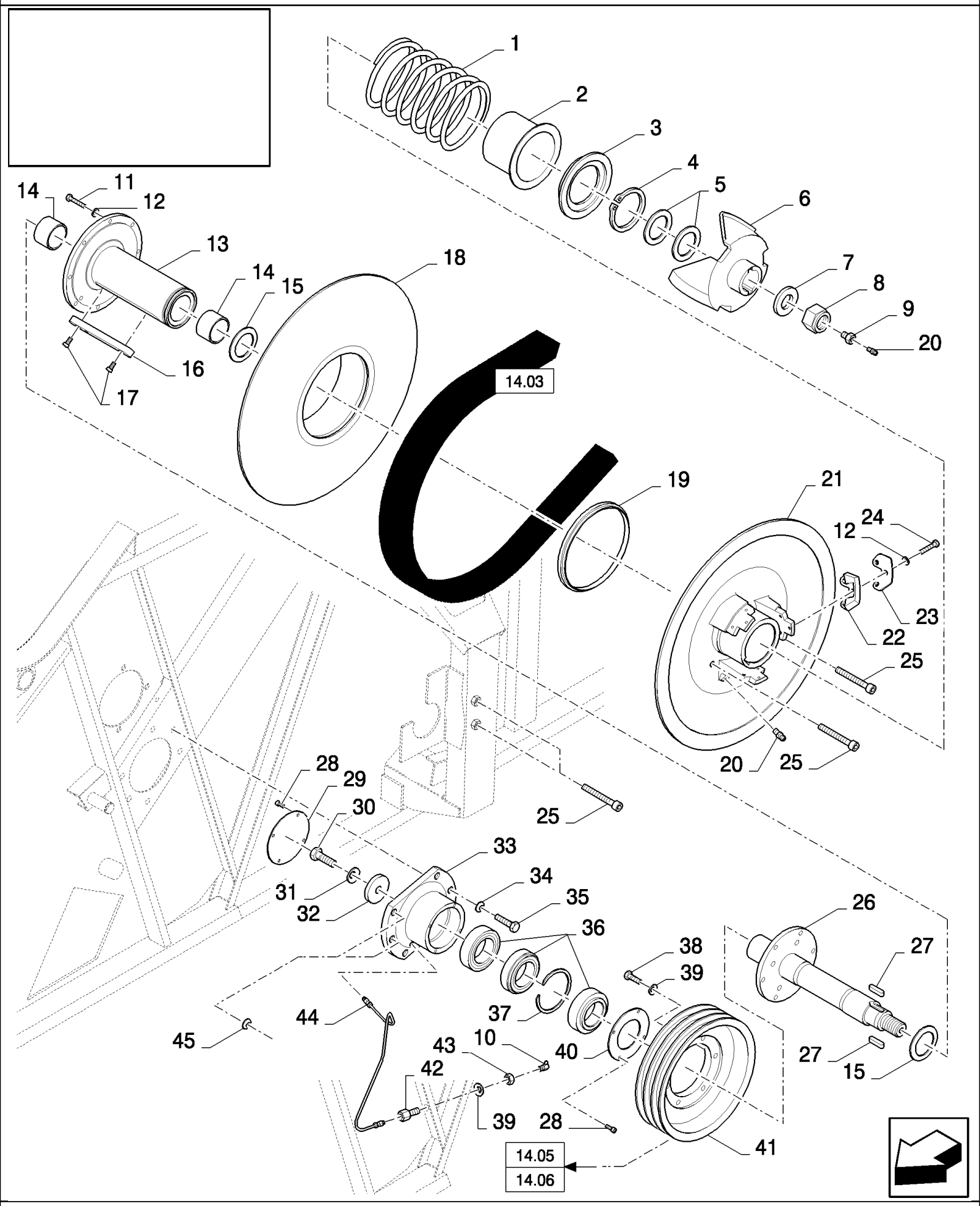

CX880 COMBINE - BASE UNIT (2/01-)

14.04(01) DRUM VARIATOR

ссылка	Номер детали	Кол-во	Описание
1	84057647	1	SPRING,
2	84069938	1	PROTECTING COVER,
3	84069939	1	RING,
4	300639	1	RING, SNAP, M90, Ext,
5	84057664	2	SPACER,
6	84334138	1	HUB,
7	84069940	1	WASHER,
8	9837689	1	NUT,
9	84334103	1	CONNECTOR, HYD.,
10	323713	1	NIPPLE, LUBE,
11	43127	8	BOLT, Hex, M8 x 25, 8.8,
12	322358	17	WASHER, SPRING, Belleville, M8,
13	84057641	1	HUB,
14	84057648	2	SPACER,
15	84057646	2	RING,
16	84052077	1	KEY,
17	84012852	2	SCREW, Hex Soc Hd, M8 x 16, 8.8,
18	84069950	1	DISC,
19	84057636	1	SEAL,
20	321204	2	NIPPLE, LUBE, M6 x 1, 16mm lg,
21	84434585	1	PULLEY,
22	84334164	3	CAM,
23	84077254	3	PLATE,
24	120104	9	SCREW, Hex, M8 x 20, 8.8,
25	84069080	2	SCREW,
26	84073317	1	SHAFT,
27	354775	2	KEY,
28	84058583	8	SCREW, M6x16
29	84061603	1	COVER,
30	385922	1	SCREW, Hex, M16 x 45, 8.8,
31	140048	1	WASHER, SPRING, Belleville, M16,
32	9801067	1	WASHER,
33	84069947	1	HUB,
34	140046	6	WASHER, Belleville, M12,
35	86629541	6	BOLT, Hex, M12 x 40, 8.8, Full Thd,
36	84035939	1	BEARING ASSY,
37	84057989	1	RING, SNAP,
38	43138	6	SCREW, Hex, M10 x 20, 8.8, Full Thd,
39	140045	7	WASHER, SPRING, Belleville, M10,
40	84057640	1	RING,
41	84069948	1	PULLEY,
42	9510459	1	CONNECTOR, HYD.,
43	100016	1	NUT, M10, Cl 8,
44	84069996	1	TUBE,

ссылка	Номер детали	Кол-во	Описание
45	394630	2	WASHER,

14.05(01) DRUM-DRIVE WITH REDUCTOR

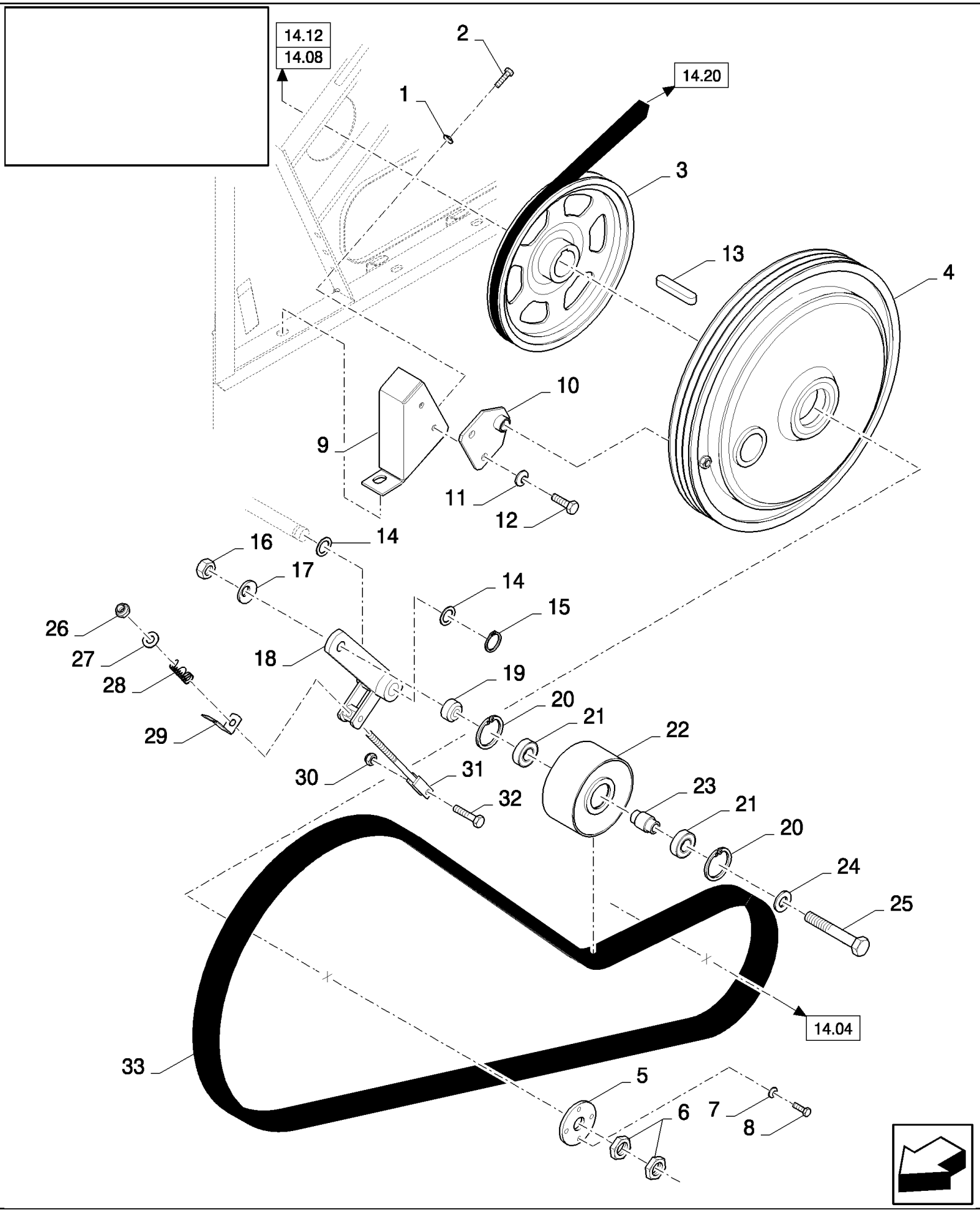

CX880 COMBINE - BASE UNIT (2/01-)

14.05(01) DRUM-DRIVE WITH REDUCTOR

ссылка	Номер детали	Кол-во	Описание
1	140045	3	WASHER, SPRING, Belleville, M10,
2	43139	3	SCREW, Hex, M10 x 25, 8.8, Full Thd, M10x25
3	84071029	1	PULLEY,
4	84334750	1	GEARBOX,
5	84073212	1	DISC,
6	100034	2	NUT, M30 x 1.5, Cl 8,
7	140017	4	WASHER, M10 x 20 x 2,
8	86508097	4	SCREW, Hex Soc Hd, M10 x 25, 12.9,
9	84069921	1	SUPPORT,
10	84434828	1	SUPPORT,
11	140046	2	WASHER, Belleville, M12,
12	9706687	2	SCREW, Hex, M12 x 30, 8.8,
13	86590758	1	KEY,
14	140103	2	WASHER,
15	370002	1	RING, SNAP, M25, Ext,
16	100020	1	NUT, M16, Cl 8,
17	140048	1	WASHER, SPRING, Belleville, M16,
18	84069790	1	LEVER, IDLER,
19	84004688	1	BUSHING,
20	370011	2	RING, SNAP, M52, Int,
21	84057966	2	BEARING, BALL,
22	84072825	1	WHEEL, IDLER,
23	84057817	1	BUSHING,
24	378246	1	WASHER, 16MM
25	43874	1	SCREW, Hex, M16 x 110, 8.8,
26	412126	1	NUT, LOCK, M12 x 1.75, Cl 8,
27	378245	1	WASHER, M12,
28	180091	1	SPRING,
29	84069789	1	INDICATOR,
30	100037	1	NUT, M10 x 1.5, Cl 8,
31	455412	1	ROD, ADJUSTMENT,
32	9706704	1	BOLT, Hex, M10 x 35, 8.8, Full Thd,
33	84061615	1	BELT, TRANSMISSION,

14.06(01) DRUM DRIVE WITHOUT REDUCTOR

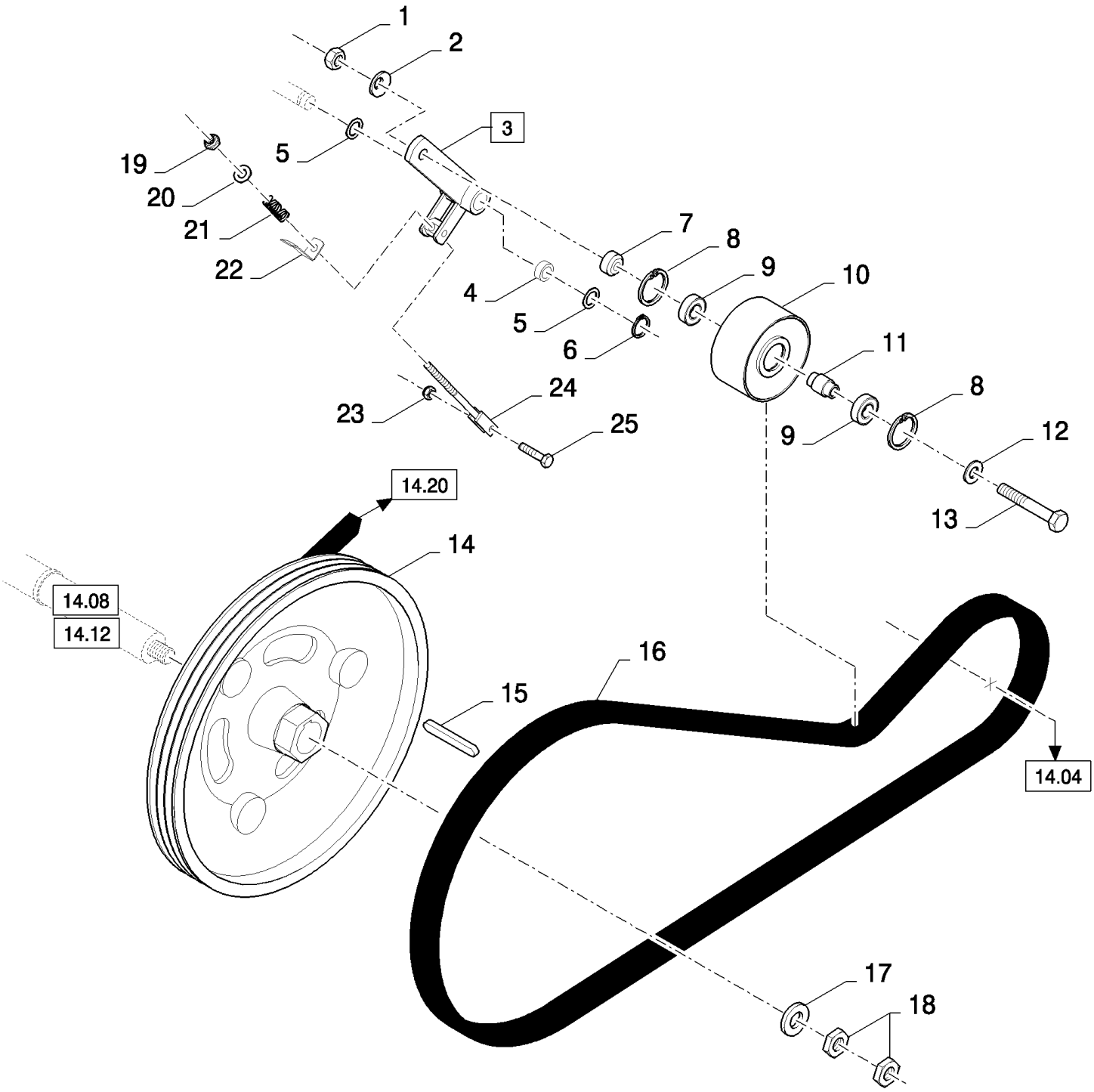

CX880 COMBINE - BASE UNIT (2/01-)

14.06(01) DRUM DRIVE WITHOUT REDUCTOR

ссылка	Номер детали	Кол-во	Описание
1	100020	1	NUT, M16, Cl 8,
2	140048	1	WASHER, SPRING, Belleville, M16,
3	84069790	1	LEVER, IDLER, (4)
4	84057311	2	SLEEVE,
5	140103	2	WASHER,
6	370002	1	RING, SNAP, M25, Ext,
7	84004688	1	BUSHING,
8	370011	2	RING, SNAP, M52, Int,
9	84057966	2	BEARING, BALL,
10	84072825	1	WHEEL, IDLER,
11	84057817	1	BUSHING,
12	378246	1	WASHER, 16MM
13	43874	1	SCREW, Hex, M16 x 110, 8.8,
14	84072208	1	PULLEY,
15	86590758	1	KEY,
16	84061615	1	BELT, TRANSMISSION,
17	84433644	1	WASHER,
18	100034	2	NUT, M30 x 1.5, Cl 8,
19	412126	1	NUT, LOCK, M12 x 1.75, Cl 8,
20	378245	1	WASHER, M12,
21	180091	1	SPRING,
22	84069789	1	INDICATOR,
23	100037	1	NUT, M10 x 1.5, Cl 8,
24	455412	1	ROD, ADJUSTMENT,
25	43140	1	BOLT, Hex, M10 x 30, 8.8, Full Thd,

14.07(01) DRUM, STANDARD

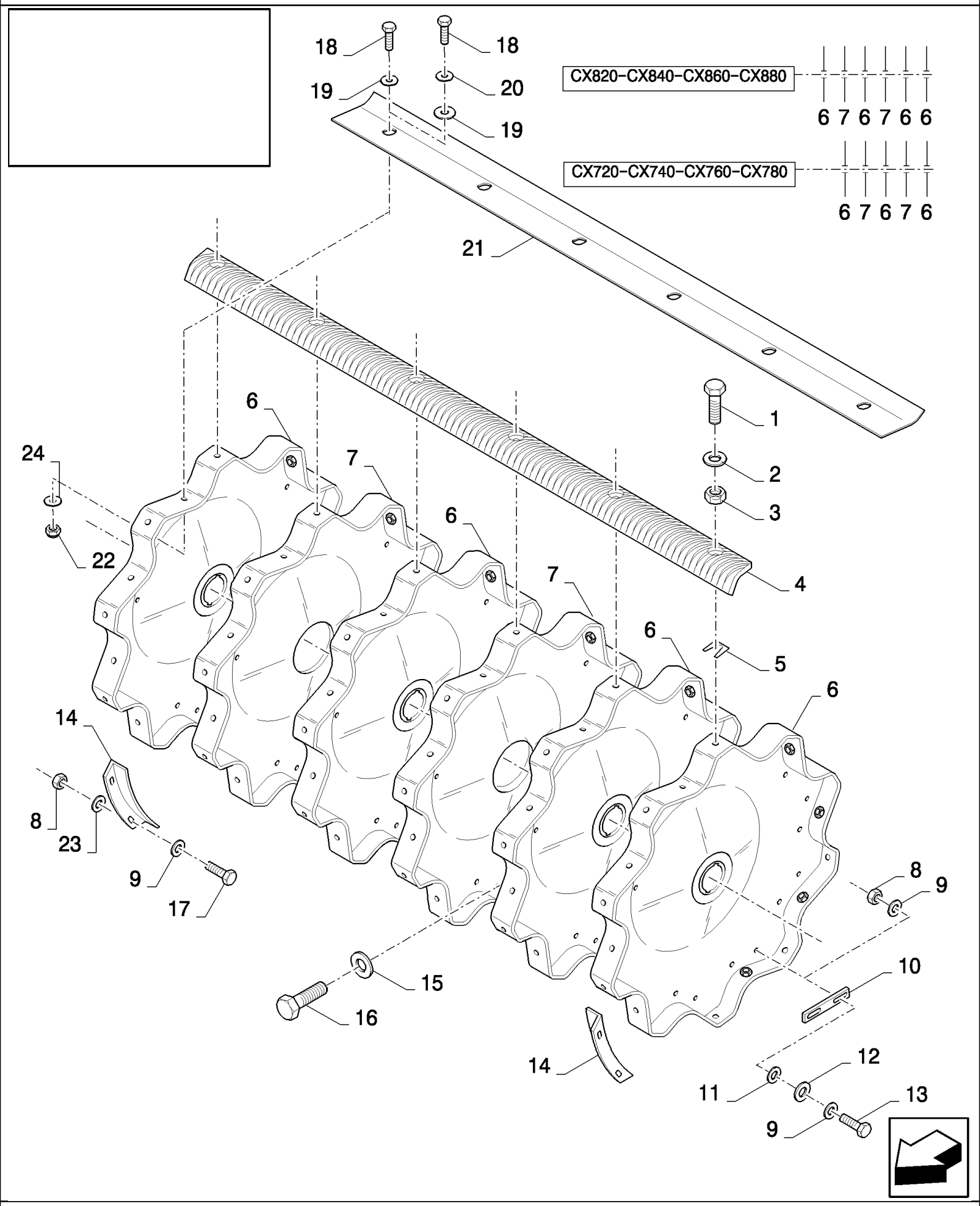

CX880 COMBINE - BASE UNIT (2/01-)

14.07(01) DRUM, STANDARD

ссылка	Номер детали	Кол-во	Описание
1	385376	AR	SCREW,
2	394630	AR	WASHER,
3	9706685	AR	NUT, M12, Cl 8,
4	84081336	5	RASP BAR SET, , FOR CX820, CX840, CX860, CX880 ONLY
4	84081337	5	RASP BAR SET, , FOR CX720, CX740, CX760, CX780 ONLY
5	80481491	AR	PLATE, ADJUSTING,
6	84069683	4	DISC, , FOR CX820, CX840, CX860, CX880 ONLY
6	84069683	3	DISC, , FOR CX720, CX740, CX760, CX780 ONLY
7	84069679	2	DISC,
8	89706690	AR	NUT, M8, Cl 8,
9	412650	AR	WASHER, Belleville, M8,
10	481494	AR	PLATE, , BSN C245
10	351518	AR	PLATE, ADJUSTING, , ASN D246
11	378243	AR	WASHER, M8,
12	378245	AR	WASHER, M12,
13	43128	AR	BOLT, Hex, M8 x 30, 8.8,
14	84069703	2	SHIELD,
15	140020	AR	WASHER, M16 x 30 x 3,
16	350616	AR	SCREW, Hex, M16 x 90, 8.8,
17	43127	4	BOLT, Hex, M8 x 25, 8.8,
18	300389	AR	BOLT, Hex, M12 x 35, 8.8, Full Thd,
18	300388	AR	SCREW, Hex, M12 x 25, 8.8,
19	140085	AR	WASHER,
20	394630	AR	WASHER, 12MM
21	437414	10	PLATE, , FOR CX820, CX840, CX860, CX880 ONLY, BSN C245
21	84440796	10	PLATE, , FOR CX820, CX840, CX860, CX880 ONLY, BSN F246423
21	84459411	10	PLATE, , FOR CX820, CX840, CX860, CX880 ONLY, ASN D424
21	431580	10	PLATE, , FOR CX720, CX740, CX760, CX780 ONLY, BSN C245
21	84440797	10	PLATE, , FOR CX720, CX740, CX760, CX780 ONLY, BSN F246423
21	84459413	10	PLATE, , FOR CX720, CX740, CX760, CX780 ONLY, ASN D424
21	84440498	10	COVER, , FOR CX820, CX840, CX860, CX880 ONLY, FOR DRY CONDITIONS ONLY, ASN D512
21	84442081	10	COVER, , FOR DRY CONDITIONS ONLY, FOR CX720, CX740, CX760, CX780 ONLY, ASN D512
22	100038	AR	NUT, M12 x 1.75, Cl 8,
23	140041	4	WASHER, M8 x 28 x 3, , ASN D238
24	394630	AR	WASHER,

14.08(01) STANDARD DRUM, SHAFT AND BEARINGS

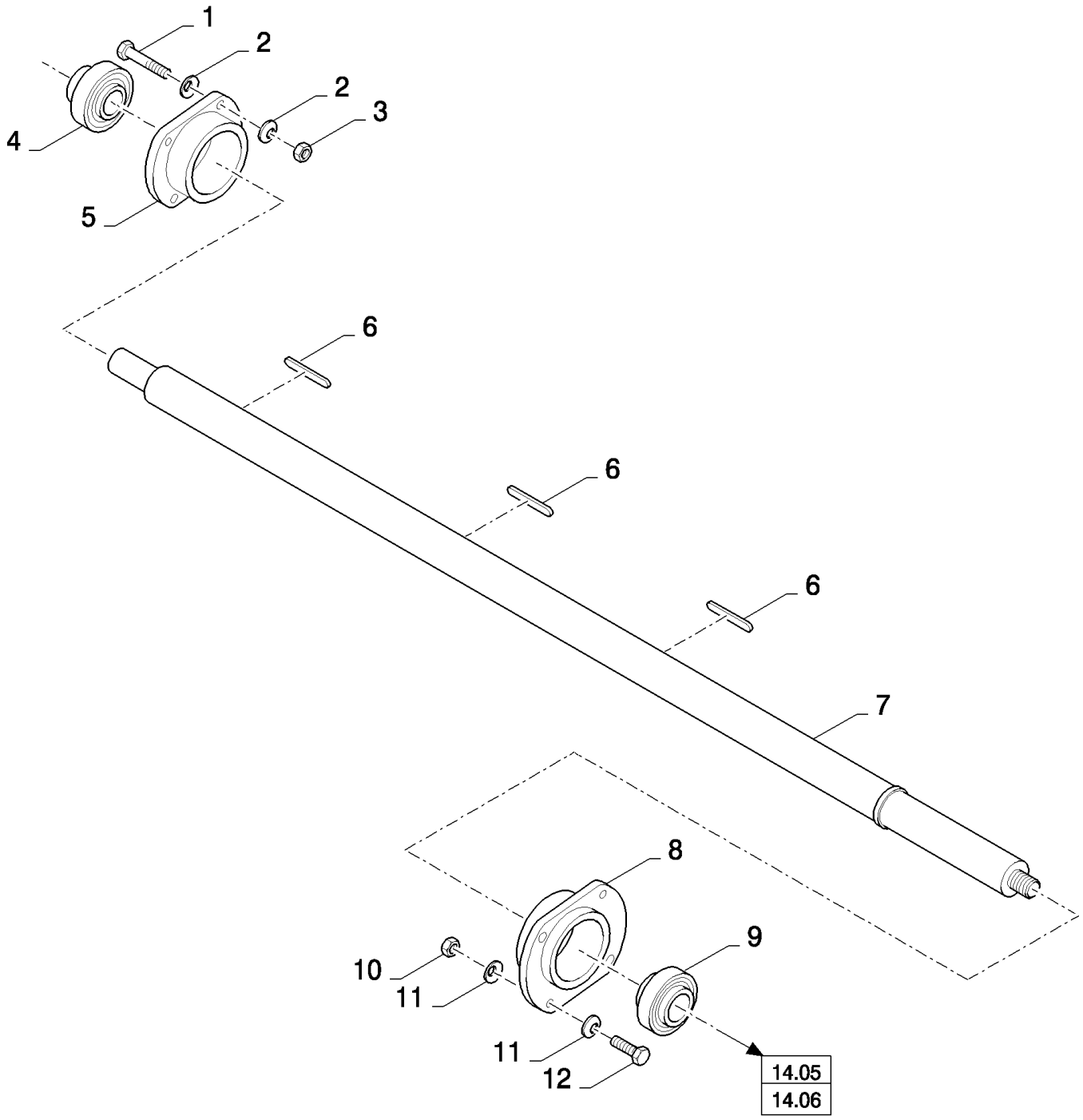

CX880 COMBINE - BASE UNIT (2/01-)

14.08(01) STANDARD DRUM, SHAFT AND BEARINGS

ссылка	Номер детали	Кол-во	Описание
1	120112	4	BOLT, Hex, M10 x 40, 8.8, Full Thd,
2	140045	8	WASHER, SPRING, Belleville, M10,
3	100016	4	NUT, M10, Cl 8,
4	84026027	1	BEARING ASSY,
5	84069750	1	HOUSING, BEARING,
6	306248	3	KEY,
7	84052910	1	SHAFT, , FOR CX820, CX840, CX860, CX880 ONLY
7	84069905	1	SHAFT, , FOR CX720, CX740, CX760, CX780 ONLY
8	84069809	1	HOUSING, BEARING,
9	84052923	1	BEARING ASSY,
10	9706685	4	NUT, M12, Cl 8,
11	140046	8	WASHER, Belleville, M12,
12	86629541	4	BOLT, Hex, M12 x 40, 8.8, Full Thd,

14.09(01) DRUM, UNIVERSAL

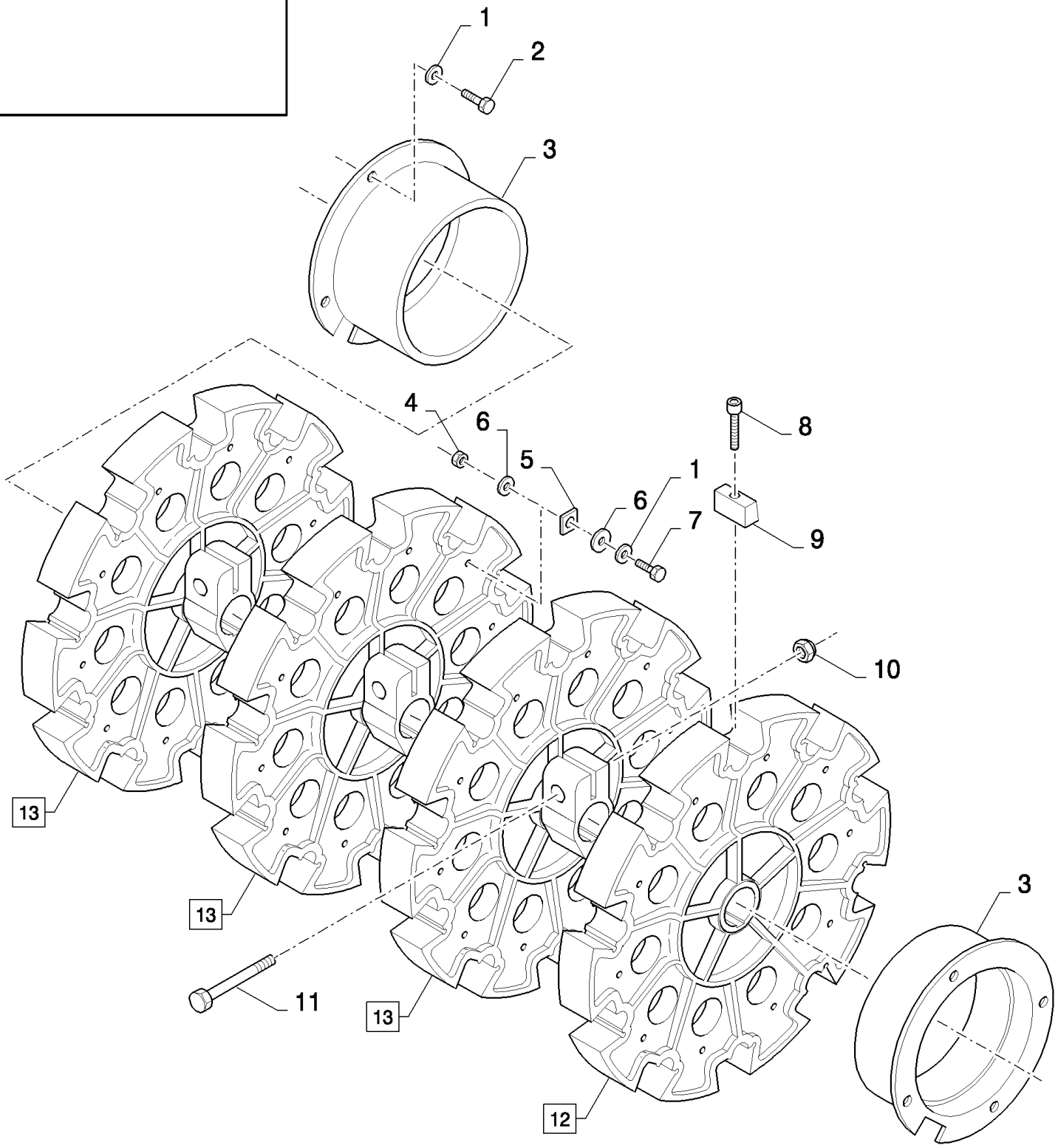

14.09(01) DRUM, UNIVERSAL

ссылка	Номер детали	Кол-во	Описание
1	322358	AR	WASHER, SPRING, Belleville, M8,
1	140041	AR	WASHER, M8 x 28 x 3,
2	120104	8	SCREW, Hex, M8 x 20, 8.8,
3	436534	2	SHIELD,
4	89706690	10	NUT, M8, Cl 8,
5	351518	AR	PLATE, ADJUSTING,
6	378243	10	WASHER, M8, , BSN C245
6	412650	10	WASHER, Belleville, M8, , ASN D246
7	43128	10	BOLT, Hex, M8 x 30, 8.8,
8	81869630	40	SCREW, Hex Soc Hd, M10 x 35, 8.8,
9	436440	40	CLIP,
10	86000441	4	NUT, M16 x 2, Cl 8,
11	350616	4	SCREW, Hex, M16 x 90, 8.8,
12	84069712	1	DISC, (10,11)
13	84069713	3	DISC, (10,11)

14.10(01) RASP BARS FOR UNIVERSAL DRUM

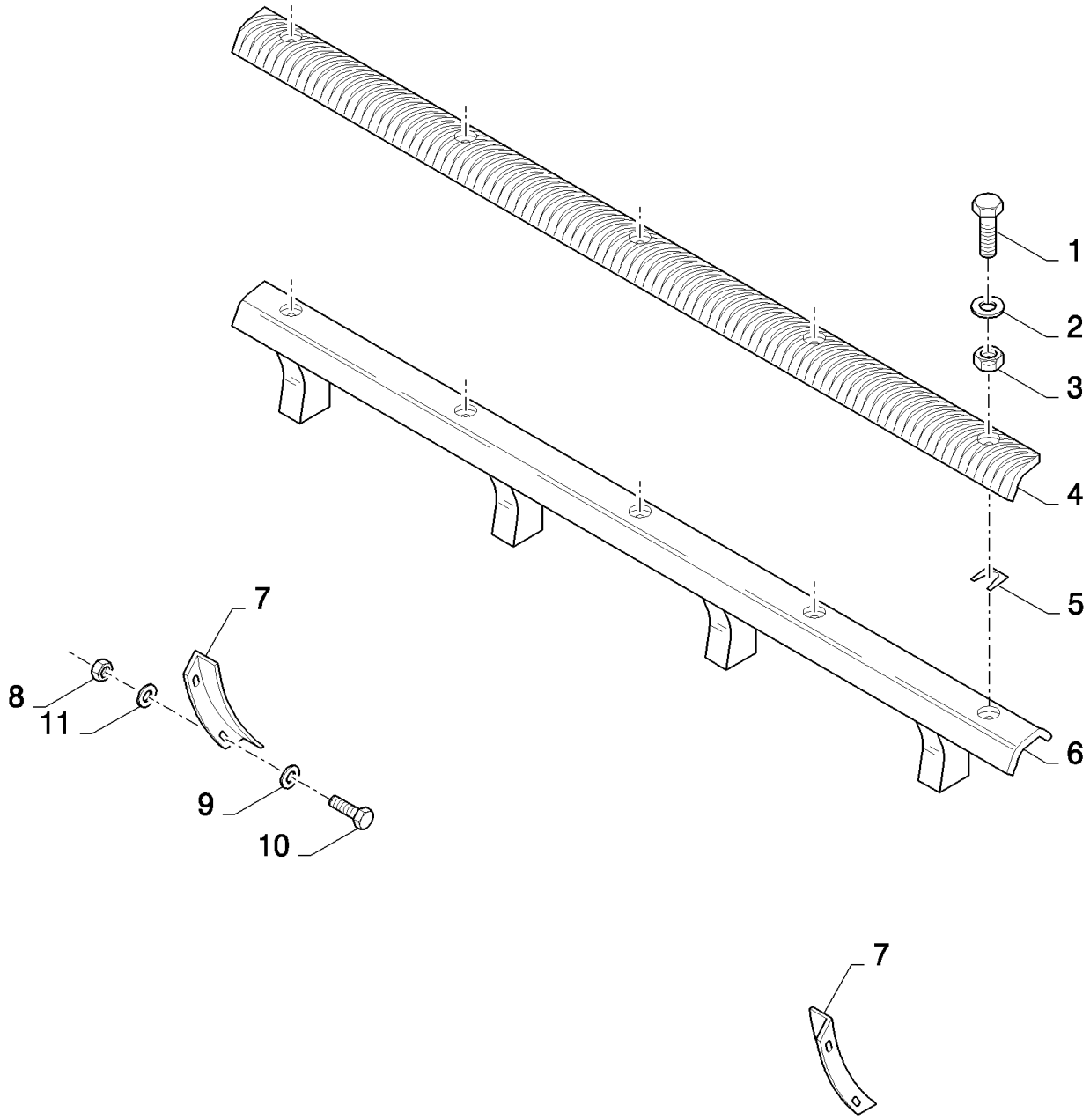

CX880 COMBINE - BASE UNIT (2/01-)

14.10(01) RASP BARS FOR UNIVERSAL DRUM

ссылка	Номер детали	Кол-во	Описание
1	385376	AR	SCREW, M12x30
2	394630	AR	WASHER, 12MM
3	9706685	AR	NUT, M12, Cl 8,
4	84081336	5	RASP BAR SET, , FOR CX820, CX840, CX860, CX880 ONLY
4	84081337	5	RASP BAR SET, , FOR CX720, CX740, CX760, CX780 ONLY
5	80481491	AR	PLATE, ADJUSTING,
6	456197	5	SUPPORT, (Set of 2), FOR CX820, CX840, CX860, CX880 ONLY
6	448903	5	SUPPORT, (Set of 2), FOR CX720, CX740, CX760, CX780 ONLY
7	84069703	2	SHIELD,
8	89706690	4	NUT, M8, Cl 8,
9	412650	8	WASHER, Belleville, M8, , BSN C237
9	412650	4	WASHER, Belleville, M8, , ASN D238
10	43127	4	BOLT, Hex, M8 x 25, 8.8,
11	140041	4	WASHER, M8 x 28 x 3, , ASN D238

14.11(01) SPIKE TOOTH BARS FOR UNIVERSAL DRUM

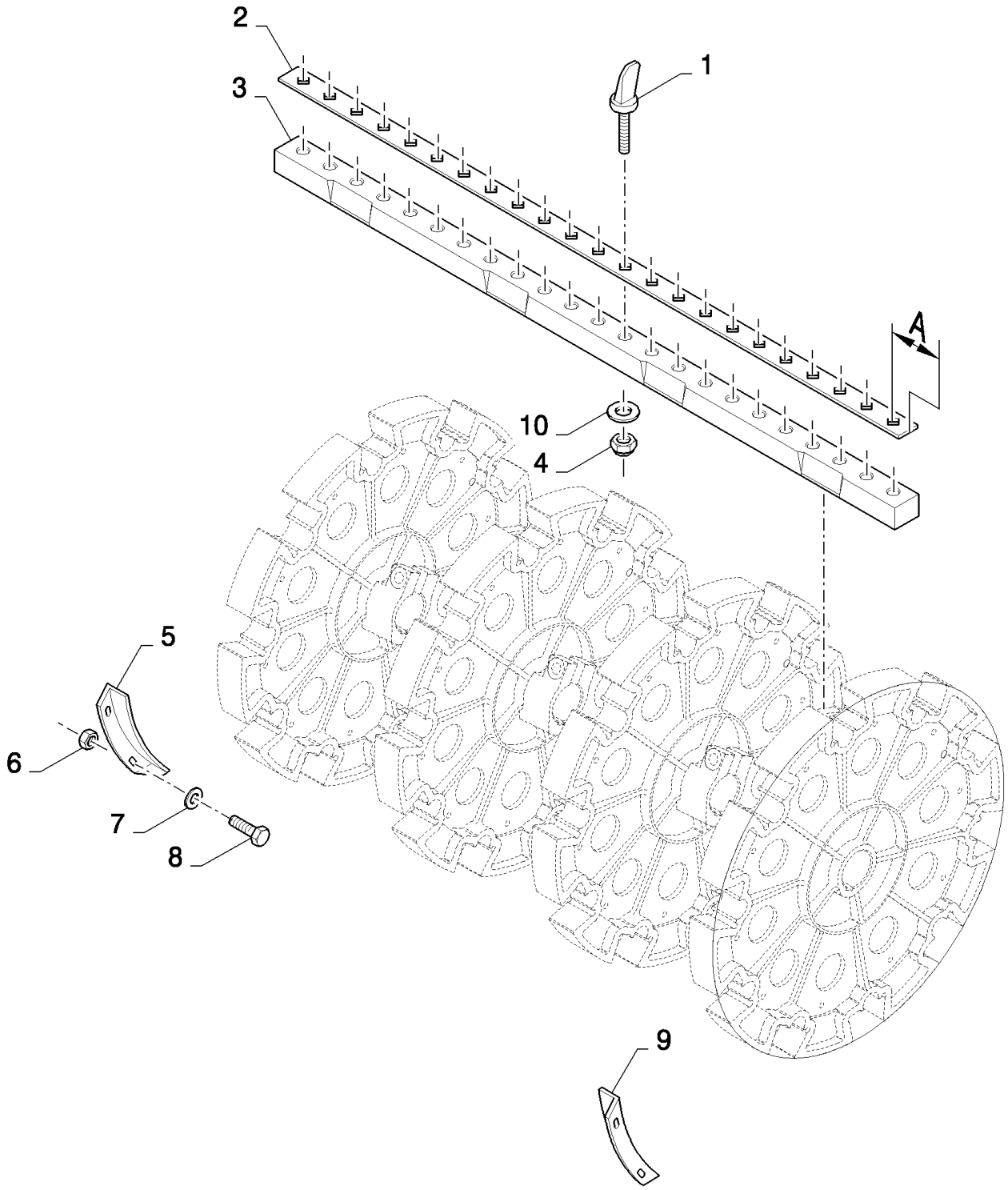

CX880 COMBINE - BASE UNIT (2/01-)

14.11(01) SPIKE TOOTH BARS FOR UNIVERSAL DRUM

ссылка	Номер детали	Кол-во	Описание
1	396935	AR	TOOTH, RICE,
2	456179	10	PLATE, FIXING, 56, A=35MM, FOR CX820, CX840, CX860, CX880 ONLY
2	9502478	10	LATH, 84, A=42MM, FOR CX820, CX840, CX860, CX880 ONLY
2	436536	5	PLATE, FIXING, 56, A=31MM, FOR CX720, CX740, CX760, CX780 ONLY
2	436538	5	PLATE, FIXING, 56, A=59MM, FOR CX720, CX740, CX760, CX780 ONLY
2	922579	10	LATH, 84, A=38MM, FOR CX720, CX740, CX760, CX780 ONLY
3	456177	5	PLATE, FIXING, 56, A=35MM, FOR CX820, CX840, CX860, CX880 ONLY
3	456178	5	PLATE, FIXING, 56, A=63MM, FOR CX820, CX840, CX860, CX880 ONLY
3	9502479	5	PLATE, FIXING, 84, A=42MM, FOR CX820, CX840, CX860, CX880 ONLY
3	9502480	5	PLATE, FIXING, 84, A=84MM, FOR CX820, CX840, CX860, CX880 ONLY
3	436535	5	LATH, 56, A=31MM, FOR CX720, CX740, CX760, CX780 ONLY
3	436537	5	LATH, 56, A=59MM, FOR CX720, CX740, CX760, CX780 ONLY
3	922574	5	LATH, 84, A=38MM, FOR CX720, CX740, CX760, CX780 ONLY
3	922575	5	LATH, 84, A=80MM, FOR CX720, CX740, CX760, CX780 ONLY
4	86000441	AR	NUT, M16 x 2, Cl 8,
5	84069654	1	SHIELD, RH
6	89706690	8	NUT, M8, Cl 8,
7	412650	16	WASHER, Belleville, M8,
8	43127	8	BOLT, Hex, M8 x 25, 8.8,
9	84069656	1	SHIELD, LH
10	140020	AR	WASHER, M16 x 30 x 3, , ASN D238

14.12(01) UNIVERSAL DRUM, SHAFT AND BEARINGS

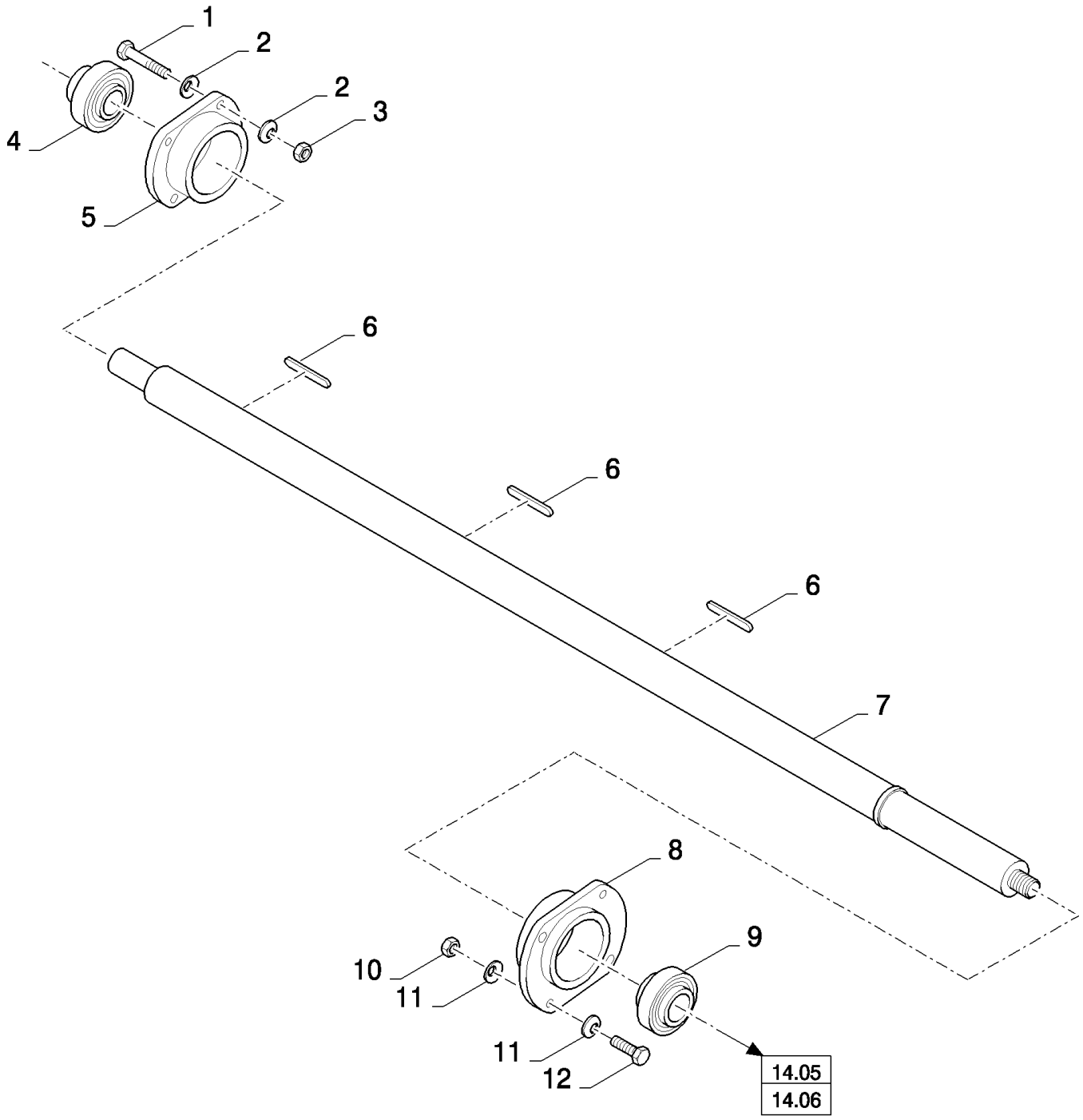

CX880 COMBINE - BASE UNIT (2/01-)

14.12(01) UNIVERSAL DRUM, SHAFT AND BEARINGS

ссылка	Номер детали	Кол-во	Описание
1	120112	4	BOLT, Hex, M10 x 40, 8.8, Full Thd,
2	140045	8	WASHER, SPRING, Belleville, M10,
3	100016	4	NUT, M10, Cl 8,
4	84026027	1	BEARING ASSY,
5	84069750	1	HOUSING, BEARING,
6	412457	3	KEY,
7	84057992	1	SHAFT, , FOR CX820, CX840, CX860, CX880 ONLY
7	84072916	1	SHAFT, , FOR CX720, CX740, CX760, CX780 ONLY
8	84069809	1	HOUSING, BEARING,
9	84052923	1	BEARING ASSY,
10	9706685	4	NUT, M12, Cl 8,
11	140046	8	WASHER, Belleville, M12,
12	86629541	4	BOLT, Hex, M12 x 40, 8.8, Full Thd,

14.13(01) CONCAVE, ADJUSTMENT

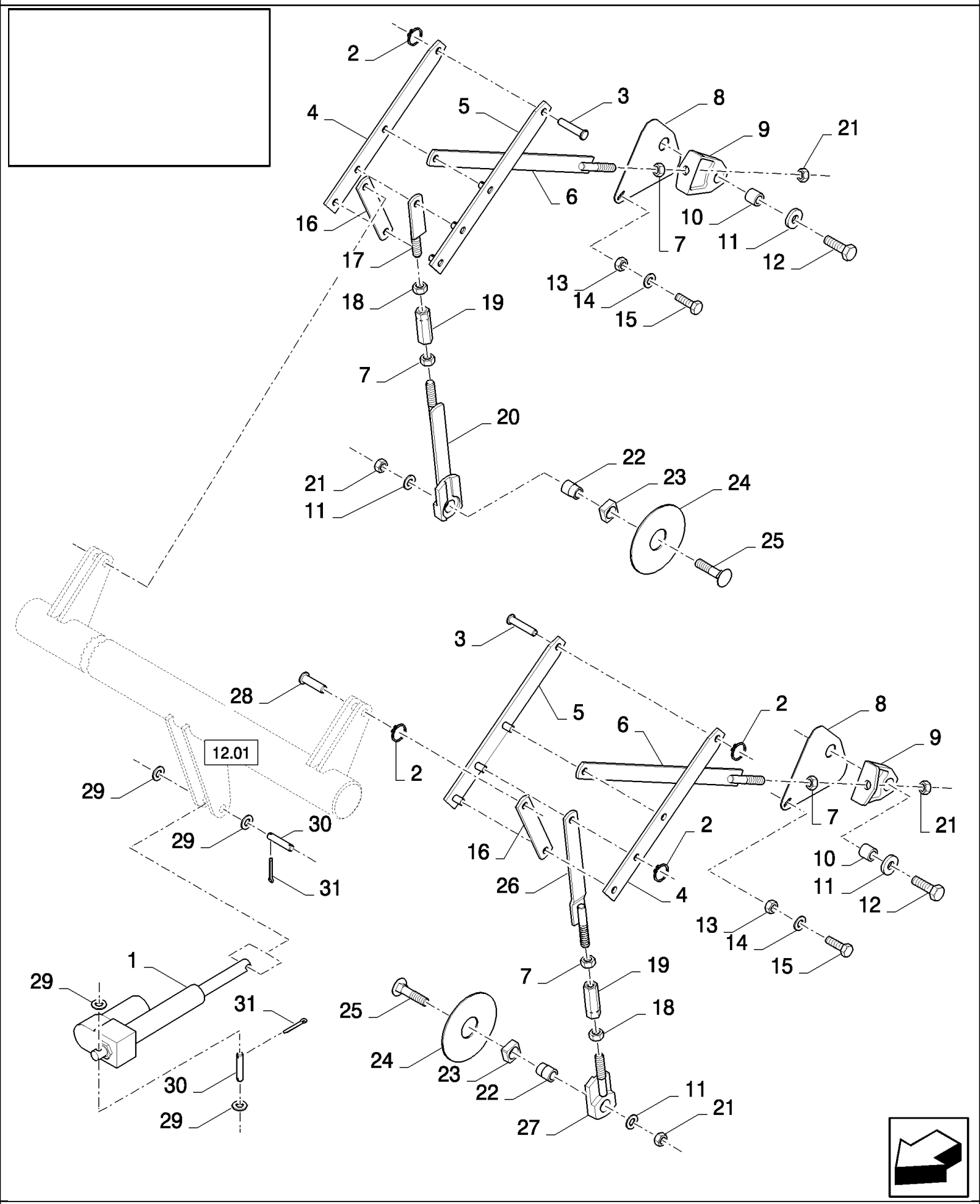

CX880 COMBINE - BASE UNIT (2/01-)

14.13(01) CONCAVE, ADJUSTMENT

ссылка	Номер детали	Кол-во	Описание
1	86580837	1	ACTUATOR,
2	370024	10	RING, SNAP, M20, Ext,
3	84400196	2	PIN,
4	84433202	2	LEVER,
5	84433205	2	LEVER,
6	84433186	2	ROD, ADJUSTMENT,
7	9706694	4	NUT, M20, Cl 8,
8	84072386	2	PLATE, COVER, , BSN C237
8	84438911	2	PLATE, COVER, , ASN D238
9	84072508	2	SUPPORT,
10	84072370	2	BUSHING,
11	84057627	4	WASHER,
12	395528	2	SCREW, Hex, M20 x 100, 8.8, M20x100
13	86629542	2	NUT, LOCK, M8 x 1.25, Cl 8,
14	378243	2	WASHER, M8,
15	86507486	2	BOLT, CARRIAGE, Short NK, M8 x 20, Cl8.8, Full Thd,
16	84433193	2	LINK/SHACKLE,
17	84433108	1	ROD, ADJUSTMENT,
18	84001867	2	NUT, M20 x 2.5, Cl8, M20
19	84064387	2	SLEEVE, ADJUSTING,
20	84433099	1	ROD, ADJUSTMENT,
21	9672396	4	NUT, LOCK, M20
22	84072368	2	BUSHING, , BSN C315
22	84444679	2	BUSHING, , ASN D316
23	84072367	2	BUSHING,
24	84072384	2	PLATE, COVER,
25	84064451	2	BOLT, CARRIAGE, Short NK, M20 x 90, Cl8.8,
26	84433091	1	ROD, ADJUSTMENT,
27	84072361	1	REGULATING SYSTEM,
28	84400194	2	PIN,
29	378245	4	WASHER, M12,
30	84017216	2	PIN,
31	130003	4	PIN, SPLIT (COTTER), M3.2 x 20,

14.14(01) CONCAVE, DRUM

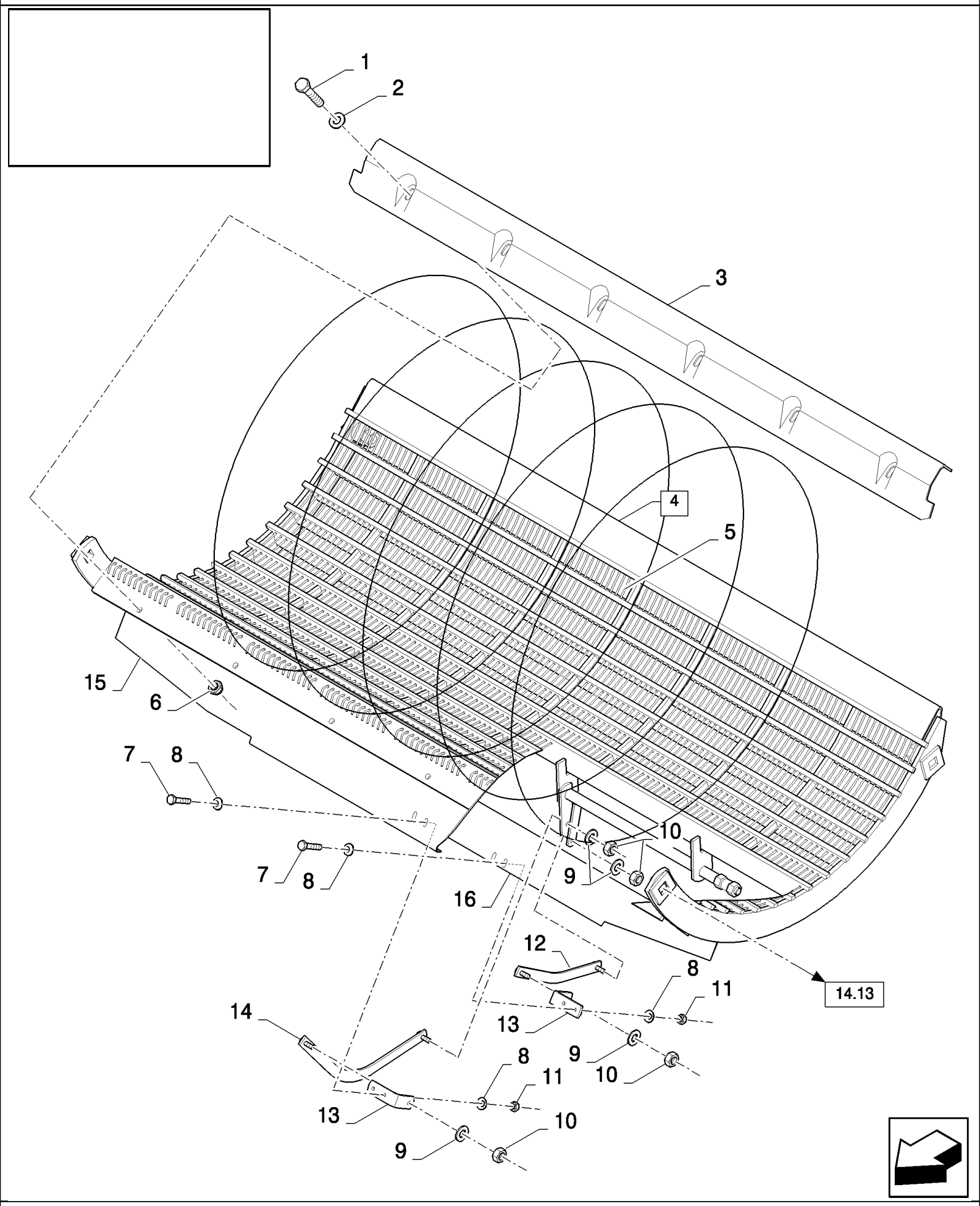

CX880 COMBINE - BASE UNIT (2/01-)

14.14(01) CONCAVE, DRUM

ссылка	Номер детали	Кол-во	Описание
1	43140	6	BOLT, Hex, M10 x 30, 8.8, Full Thd,
2	378244	6	WASHER, M10,
3	84073001	1	PLATE, , FOR CX820, CX840, CX860, CX880 ONLY
3	84073031	1	PLATE, , FOR CX720, CX740, CX760, CX780 ONLY
4	84077392	1	CONCAVE, (5,15,16),Mod., FOR CX820, CX840, CX860, CX880 ONLY
4	84073084	1	CONCAVE, (5,15,16),Mod., FOR CX720, CX740, CX760, CX780 ONLY
4	84077329	1	CONCAVE, (5),Mod., FOR CX820, CX840, CX860, CX880 ONLY, FOR NA ONLY
4	84073335	1	CONCAVE, (5),Univ., FOR CX820, CX840, CX860, CX880 ONLY
5	84061512	AR	WIRE, RETAINING, Mod. concave
5	84061647	AR	WIRE, RETAINING, Univ. concave
5	84061654	AR	WIRE, RETAINING, Univ. concave, short wire
6	100037	6	NUT, M10 x 1.5, Cl 8,
7	120100	4	BOLT, Hex, M6 x 20, 8.8,
8	412649	8	WASHER, SPRING, Belleville, M6,
9	378243	4	WASHER, M8,
10	86629542	4	NUT, LOCK, M8 x 1.25, Cl 8,
11	15896221	4	NUT, M6, Cl 10,
12	84022932	1	LEVER,
13	9503470	2	BRACKET,
14	84073016	1	ARM,
15	84071234	1	PLATE, , FOR CX720, CX740, CX760, CX780 ONLY
15	84061712	1	PLATE, , FOR CX820, CX840, CX860, CX880 ONLY
16	84071235	1	PLATE, , FOR CX720, CX740, CX760, CX780 ONLY
16	84061739	1	PLATE, , FOR CX820, CX840, CX860, CX880 ONLY

14.15(01) CONCAVE (CORN AND BEANS) FOR STANDARD DRUM

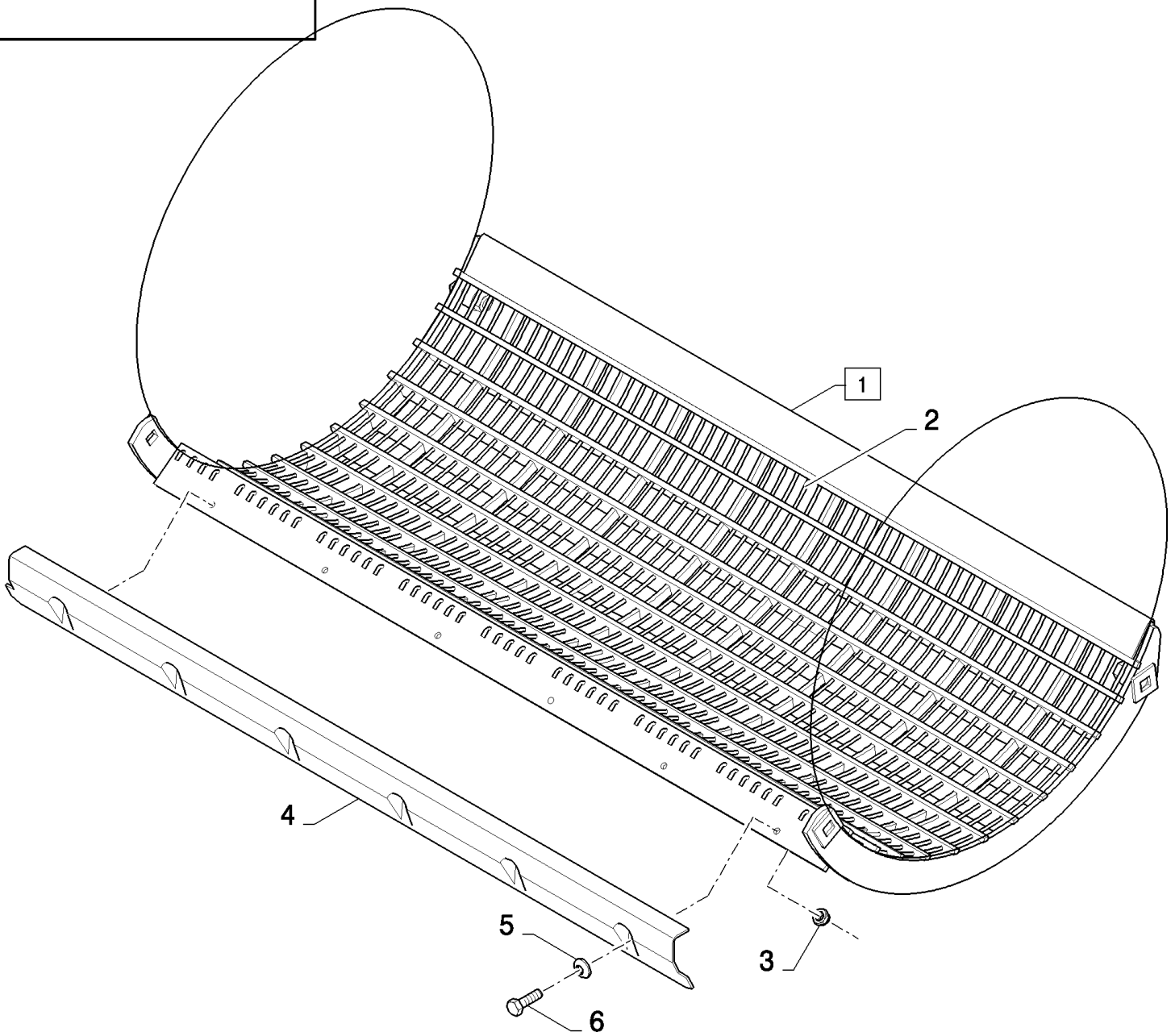

CX880 COMBINE - BASE UNIT (2/01-)

14.15(01) CONCAVE (CORN AND BEANS) FOR STANDARD DRUM

ссылка	Номер детали	Кол-во	Описание
1	84069767	1	CONCAVE, (2), FOR CX820, CX840, CX860, CX880 ONLY
1	84076775	1	CONCAVE, (2), FOR CX720, CX740, CX760, CX780 ONLY
2	84064193	AR	WIRE,
3	100037	AR	NUT, M10 x 1.5, Cl 8,
4	84073001	1	PLATE, , FOR CX820, CX840, CX860, CX880 ONLY
4	84073031	1	PLATE, , FOR CX720, CX740, CX760, CX780 ONLY
5	378244	AR	WASHER, M10,
6	43140	AR	BOLT, Hex, M10 x 30, 8.8, Full Thd,

14.16(01) SPIKE TOOTH CONCAVE 56 AND 84

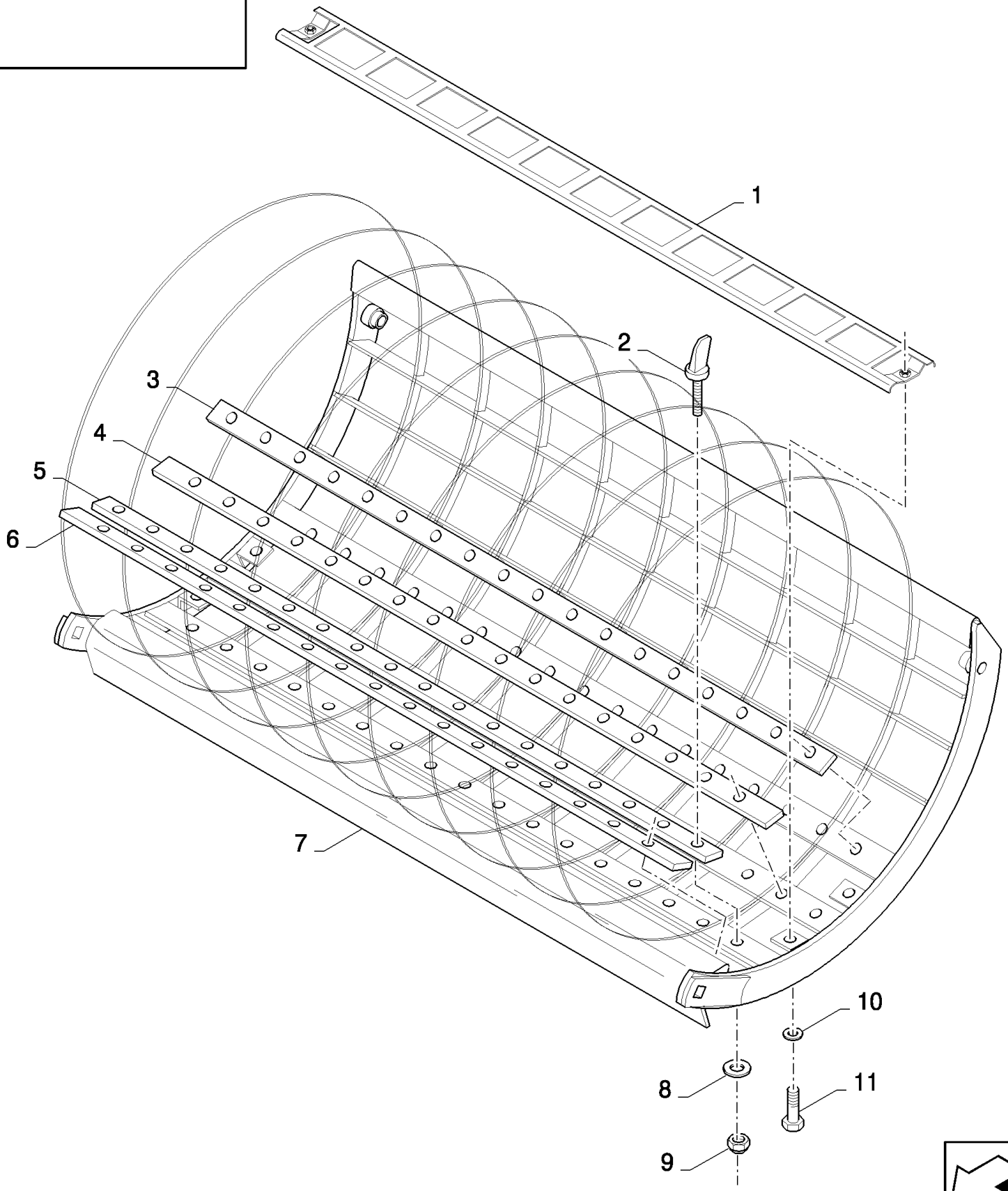

CX880 COMBINE - BASE UNIT (2/01-)

14.16(01) SPIKE TOOTH CONCAVE 56 AND 84

ссылка	Номер детали	Кол-во	Описание
1	84038642	2	GRILLE, , FOR CX820, CX840, CX860, CX880 ONLY
1	84038643	2	GRILLE, , FOR CX720, CX740, CX760, CX780 ONLY
2	396935	81	TOOTH, RICE, , FOR CX820, CX840, CX860, CX880 ONLY
2	396935	54	TOOTH, RICE, , FOR CX820, CX840, CX860, CX880 ONLY
2	396935	68	TOOTH, RICE, , FOR CX720, CX740, CX760, CX780 ONLY
2	396935	45	TOOTH, RICE, , FOR CX720, CX740, CX760, CX780 ONLY
2	396935	106	TOOTH, RICE, , FOR CX820, CX840, CX860, CX880 ONLY, FOR GRASS SEED ONLY, BSN C315
2	396935	93	TOOTH, RICE, , FOR GRASS SEED ONLY, FOR CX820, CX840, CX860, CX880 ONLY, ASN D316
3	411298	1	PLATE, FIXING, -56, FOR CX820, CX840, CX860, CX880 ONLY
3	411298	1	PLATE, FIXING, , FOR CX820, CX840, CX860, CX880 ONLY, FOR GRASS SEED ONLY
3	9502466	1	PLATE, FIXING, -84, FOR CX820, CX840, CX860, CX880 ONLY
3	399656	1	LATH, -56, FOR CX720, CX740, CX760, CX780 ONLY
3	80922586	1	PLATE, FIXING, -84, FOR CX720, CX740, CX760, CX780 ONLY
4	411304	1	PLATE, FIXING, -56, FOR CX820, CX840, CX860, CX880 ONLY
4	411304	1	PLATE, FIXING, , FOR CX820, CX840, CX860, CX880 ONLY, FOR GRASS SEED ONLY
4	9502467	1	PLATE, FIXING, -84, FOR CX820, CX840, CX860, CX880 ONLY
4	399655	1	LATH, -56, FOR CX720, CX740, CX760, CX780 ONLY
4	80922581	1	PLATE, FIXING, -84, FOR CX720, CX740, CX760, CX780 ONLY
5	411298	1	PLATE, FIXING, -56, FOR CX820, CX840, CX860, CX880 ONLY
5	411298	1	PLATE, FIXING, , FOR CX820, CX840, CX860, CX880 ONLY, FOR GRASS SEED ONLY
5	9502466	1	PLATE, FIXING, -84, FOR CX820, CX840, CX860, CX880 ONLY
5	399656	1	LATH, -56, FOR CX720, CX740, CX760, CX780 ONLY
5	80922586	1	PLATE, FIXING, -84, FOR CX720, CX740, CX760, CX780 ONLY
6	411304	1	PLATE, FIXING, -56, FOR CX820, CX840, CX860, CX880 ONLY
6	411304	1	PLATE, FIXING, , FOR CX820, CX840, CX860, CX880 ONLY, FOR GRASS SEED ONLY
6	9502467	1	PLATE, FIXING, -84, FOR CX820, CX840, CX860, CX880 ONLY
6	399655	1	LATH, -56, FOR CX720, CX740, CX760, CX780 ONLY
6	80922581	1	PLATE, FIXING, -84, FOR CX720, CX740, CX760, CX780 ONLY
7	84069645	1	CONCAVE, -56, FOR CX820, CX840, CX860, CX880 ONLY, BSN C225
7	84439257	1	CONCAVE, -56, FOR CX820, CX840, CX860, CX880 ONLY, ASN D226
7	84434651	1	CONCAVE, -56, FOR CX820, CX840, CX860, CX880 ONLY, FOR GRASS SEED ONLY, BSN C315
7	84446228	1	CONCAVE, , FOR GRASS SEED ONLY, FOR CX820, CX840, CX860, CX880 ONLY, ASN D316
7	84076338	1	CONCAVE, -84, FOR CX820, CX840, CX860, CX880 ONLY, BSN C225
7	84439196	1	CONCAVE, -84, FOR CX820, CX840, CX860, CX880 ONLY, ASN D226
7	84076469	1	CONCAVE, -56, FOR CX720, CX740, CX760, CX780 ONLY, BSN C225
7	84439122	1	CONCAVE, -56, FOR CX720, CX740, CX760, CX780 ONLY, ASN D226
7	84076520	1	CONCAVE, -84, FOR CX720, CX740, CX760, CX780 ONLY, BSN C225
7	84439190	1	CONCAVE, -84, FOR CX720, CX740, CX760, CX780 ONLY, ASN D226
8	394631	AR	WASHER, 16MM
8	333041	4	WASHER,
9	86000441	AR	NUT, M16 x 2, Cl 8,
10	140045	4	WASHER, SPRING, Belleville, M10,
11	43138	4	SCREW, Hex, M10 x 20, 8.8, Full Thd,

14.17(01) DE-AWNING SLATS

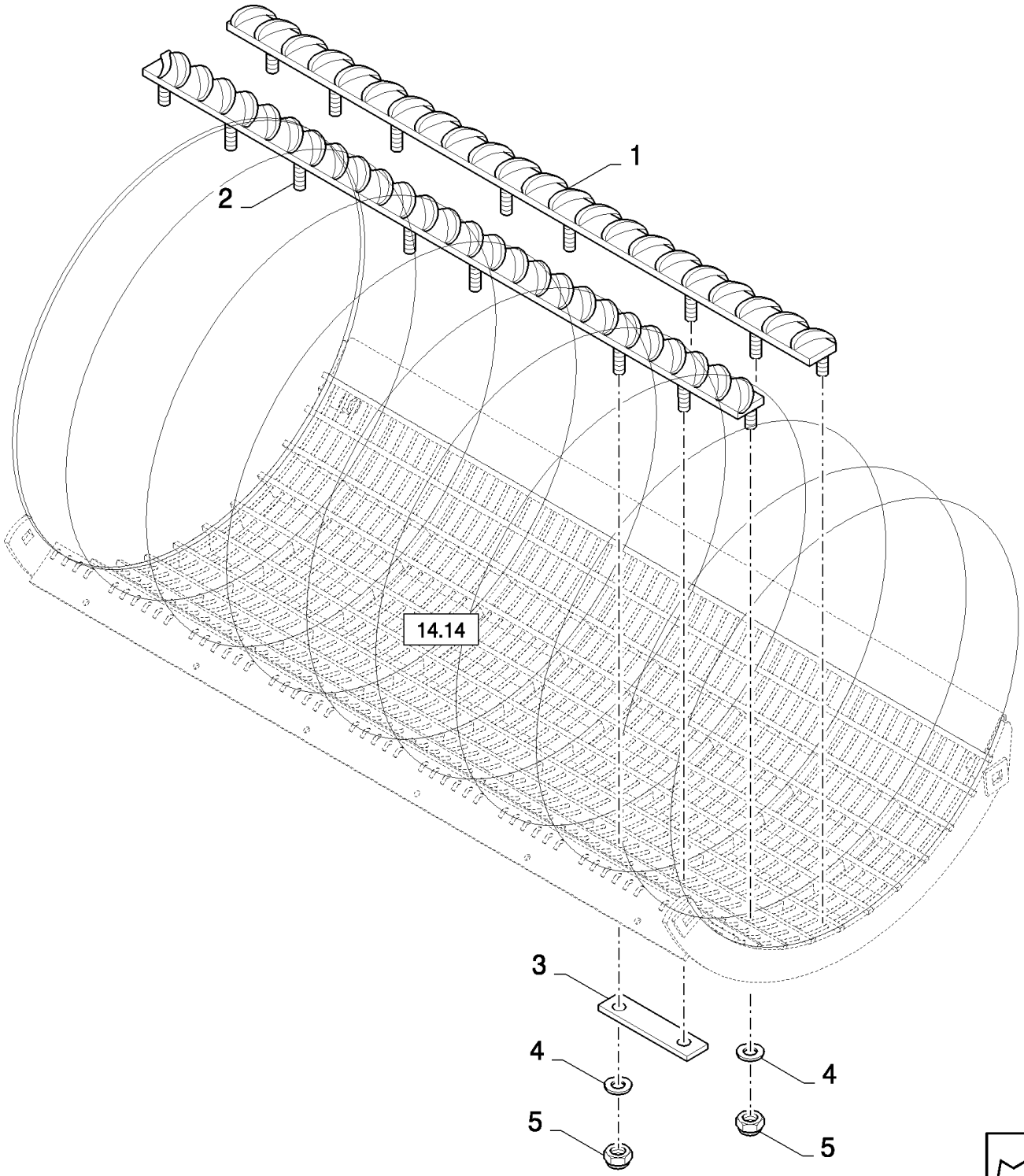

CX880 COMBINE - BASE UNIT (2/01-)

14.17(01) DE-AWNING SLATS

ссылка	Номер детали	Кол-во	Описание
1	84015711	1	DE AWNER, , FOR CX720, CX740, CX760, CX780 ONLY
1	84015715	1	DE AWNER, , FOR CX820, CX840, CX860, CX880 ONLY, MOD.CONCAVE, BSN C237
1	84814227	1	DE AWNER, , MOD.CONCAVE, FOR CX820, CX840, CX860, CX880 ONLY, ASN D238
1	84015719	1	DE AWNER, , FOR CX820, CX840, CX860, CX880 ONLY, UNIV.CONCAVE, BSN C237
1	84814225	1	DE AWNER, , UNIV.CONCAVE, FOR CX820, CX840, CX860, CX880 ONLY, ASN D238
2	84015713	1	DE AWNER, , FOR CX720, CX740, CX760, CX780 ONLY
2	84015717	1	DE AWNER, , FOR CX820, CX840, CX860, CX880 ONLY, MOD.CONCAVE, BSN C237
2	84814223		DE AWNER, , MOD.CONCAVE, FOR CX820, CX840, CX860, CX880 ONLY, ASN D238
2	84015721	1	DE AWNER, , FOR CX820, CX840, CX860, CX880 ONLY, UNIV.CONCAVE, BSN C237
2	84814221		DE AWNER, , UNIV.CONCAVE, FOR CX820, CX840, CX860, CX880 ONLY, ASN D238
3	9832998	AR	PLATE, FIXING,
4	140041	AR	WASHER, M8 x 28 x 3,
5	412250	AR	NUT, LOCK, M8 x 1.25, Cl 8,

14.18(01) SUNFLOWER COVER

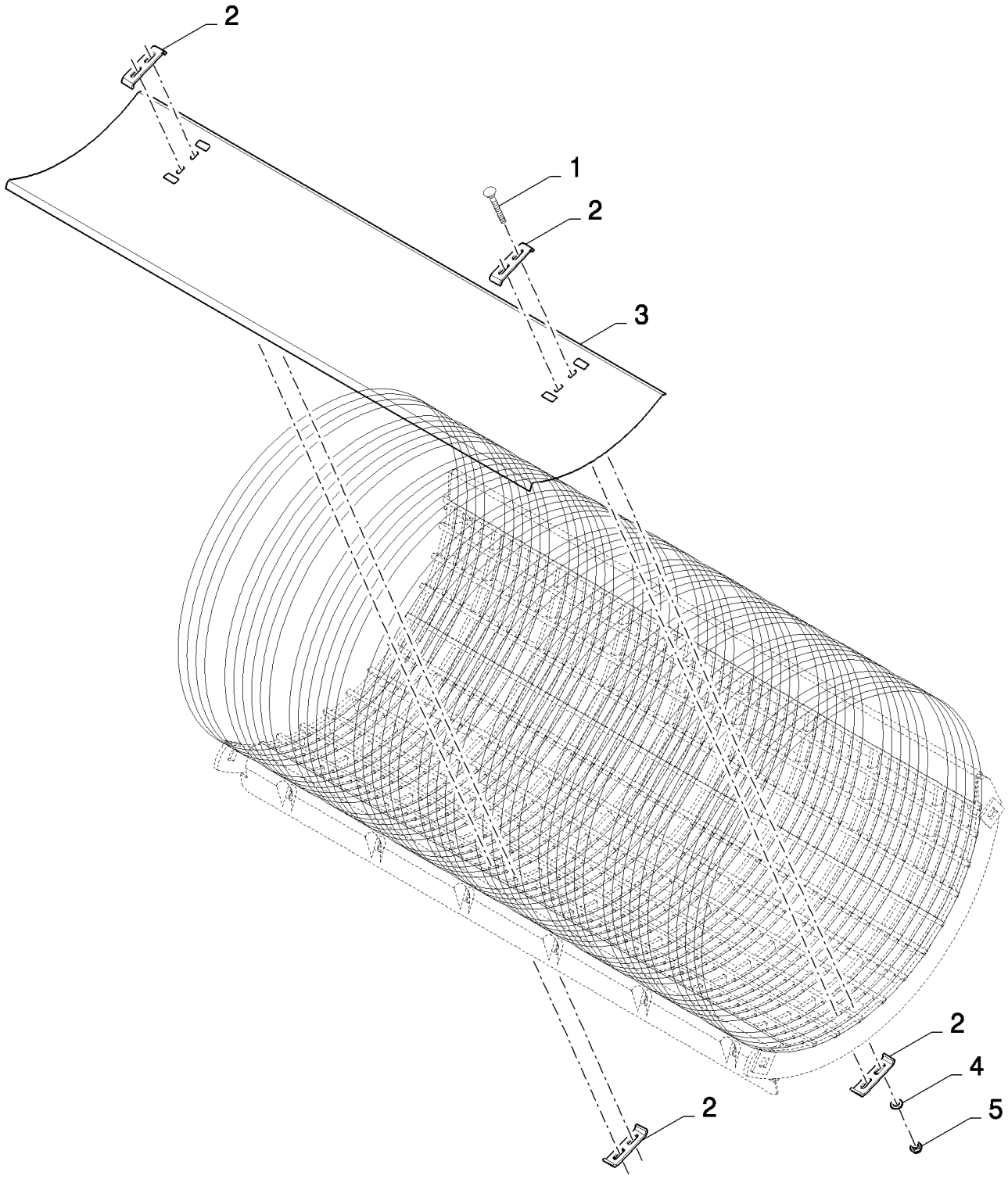

CX880 COMBINE - BASE UNIT (2/01-)

14.18(01) SUNFLOWER COVER

ссылка	Номер детали	Кол-во	Описание
1	366046	4	BOLT, CARRIAGE, Short NK, M8 x 80, Cl8.8, M8x80
2	84441086	4	CLIP,
3	84441052	1	PLATE, , FOR CX720, CX740, CX760, CX780 ONLY
3	84441126	1	PLATE, , FOR CX820, CX840, CX860, CX880 ONLY
4	140041	4	WASHER, M8 x 28 x 3,
5	412250	4	NUT, LOCK, M8 x 1.25, Cl 8,

14.19(01) BEATER AND WEAR PLATES

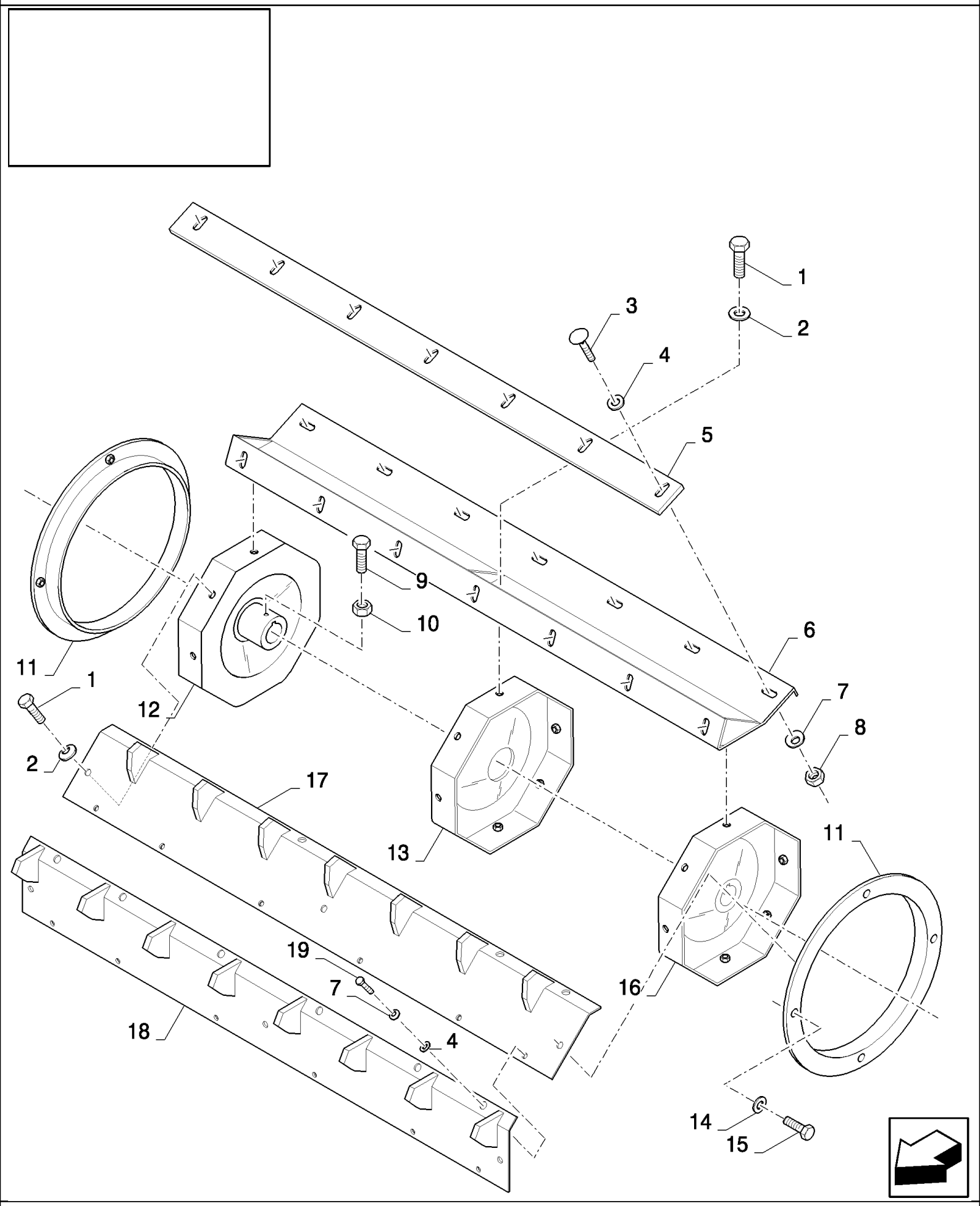

CX880 COMBINE - BASE UNIT (2/01-)

14.19(01) BEATER AND WEAR PLATES

ссылка	Номер детали	Кол-во	Описание
1	43151	24	SCREW, Hex, M12 x 20, 8.8, Full Thd,
2	140046	24	WASHER, Belleville, M12,
3	338949	AR	BOLT, CARRIAGE, Short NK, M10 x 25, Cl8.8, Full Thd,
4	447336	AR	WASHER,
5	84071032	8	PLATE, , FOR CX820, CX840, CX860, CX880 ONLY
5	84071031	8	PLATE, , FOR CX720, CX740, CX760, CX780 ONLY
6	84444474	8	PLATE, , FOR CX820, CX840, CX860, CX880 ONLY
6	84444553	8	PLATE, , FOR CX720, CX740, CX760, CX780 ONLY
7	140045	AR	WASHER, SPRING, Belleville, M10,
8	100016	AR	NUT, M10, Cl 8,
9	9706704	2	BOLT, Hex, M10 x 35, 8.8, Full Thd,
10	320648	2	NUT, M10, Cl 8, M10
11	84071039	2	RING,
12	84071035	1	DISC,
13	84071034	1	DISC,
15	322358	8	WASHER, SPRING, Belleville, M8,
16	84071035	1	DISC, , BSN C285
16	84444188	1	DISC, , ASN D286
17	84446559	4	PLATE, Optional DIA, FOR CX820, CX840, CX860, CX880 ONLY
17	84440915	1	PLATE, , FOR CX720, CX740, CX760, CX780 ONLY
18	84446558	4	PLATE, Optional DIA, FOR CX820, CX840, CX860, CX880 ONLY
18	84440917	1	PLATE, , FOR CX720, CX740, CX760, CX780 ONLY
19	43139	AR	SCREW, Hex, M10 x 25, 8.8, Full Thd, M10x25
14	16043224	8	BOLT, Hex, M8 x 16, 8.8, Full Thd,
20	84110386	1	BEATER PINS, KIT, DIA - NOT SHOWN, Includes Ref. 1,2,4,7,17,18,19

14.20(01) BEATER, DRIVE

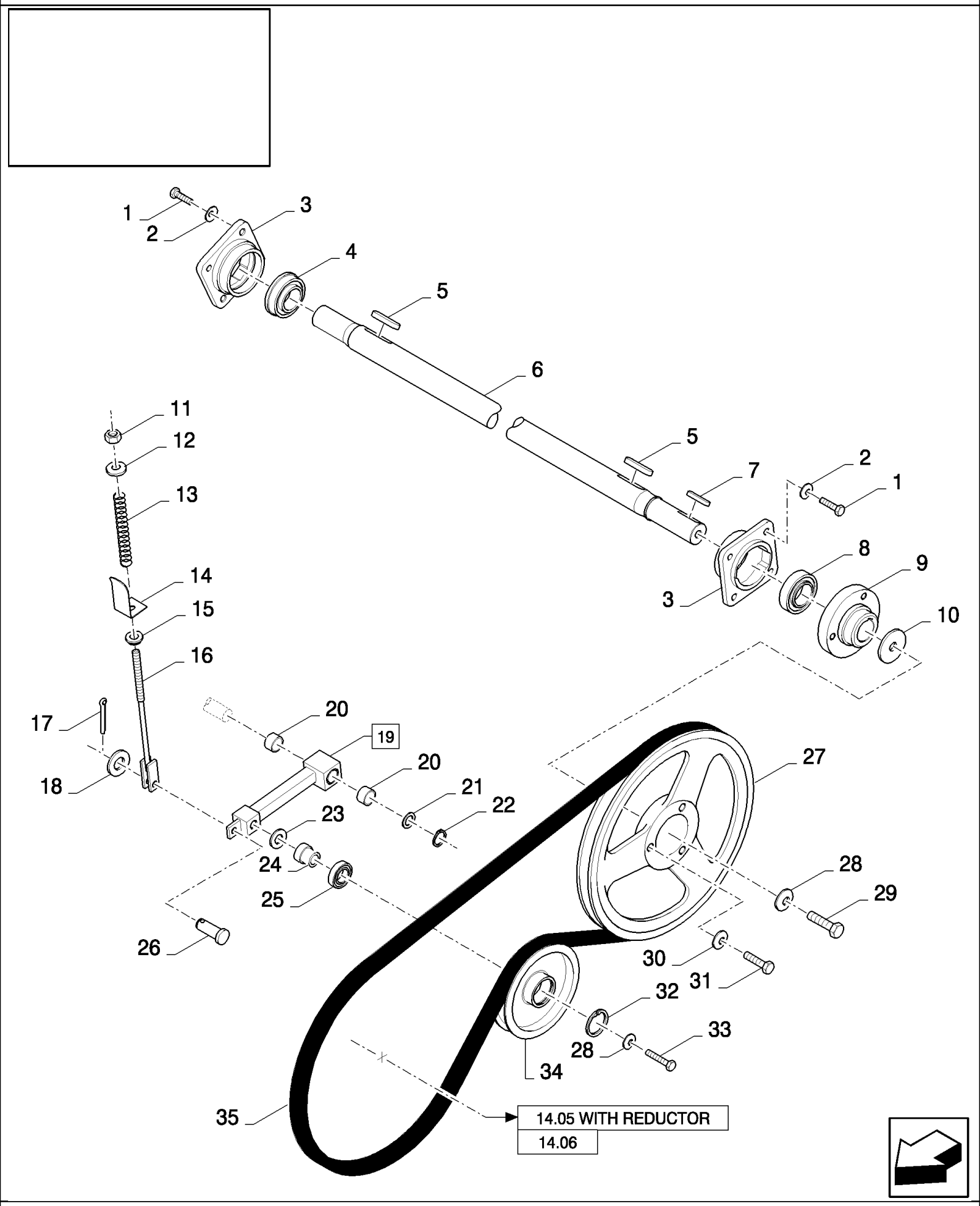

CX880 COMBINE - BASE UNIT (2/01-)

14.20(01) BEATER, DRIVE

ссылка	Номер детали	Кол-во	Описание
1	43140	8	BOLT, Hex, M10 x 30, 8.8, Full Thd,
2	140045	8	WASHER, SPRING, Belleville, M10,
3	84069913	2	HOUSING, BEARING,
4	455805	1	BEARING, BALL,
5	323624	2	KEY,
6	84045141	1	SHAFT, , FOR CX820, CX840, CX860, CX880 ONLY
6	84069709	1	SHAFT, , FOR CX720, CX740, CX760, CX780 ONLY
7	170056	1	KEY,
8	84057307	1	BEARING,
9	84069914	1	HUB,
10	84017220	1	WASHER,
11	412126	1	NUT, LOCK, M12 x 1.75, Cl 8,
12	378245	1	WASHER, M12,
13	180091	1	SPRING,
14	84069976	1	INDICATOR,
15	439857	1	BUSHING,
16	80455661	1	ROD,
17	130004	1	PIN, SPLIT (COTTER), M3.2 x 25,
18	86511323	1	WASHER, M10 x 20 x 2,
19	84069915	1	LEVER, (20)
20	84057311	2	SLEEVE,
21	140229	2	WASHER,
22	370002	1	RING, SNAP, M25, Ext,
23	378246	1	WASHER, 16MM
24	9515145	1	BUSHING,
25	443898	1	BEARING, BALL,
26	322901	1	PIN,
27	84069916	1	PULLEY,
28	140048	1	WASHER, SPRING, Belleville, M16,
29	43168	1	BOLT, Hex, M16 x 40, 8.8,
30	140046	3	WASHER, Belleville, M12,
31	9628065	3	SCREW, Hex, M12 x 45, 8.8,
32	370011	1	RING, SNAP, M52, Int,
33	120091	1	BOLT, Hex, M16 x 60, 8.8,
34	84069612	1	IDLER,
35	84045256	1	BELT, TRANSMISSION,

14.21(01) CONCAVE, BEATER

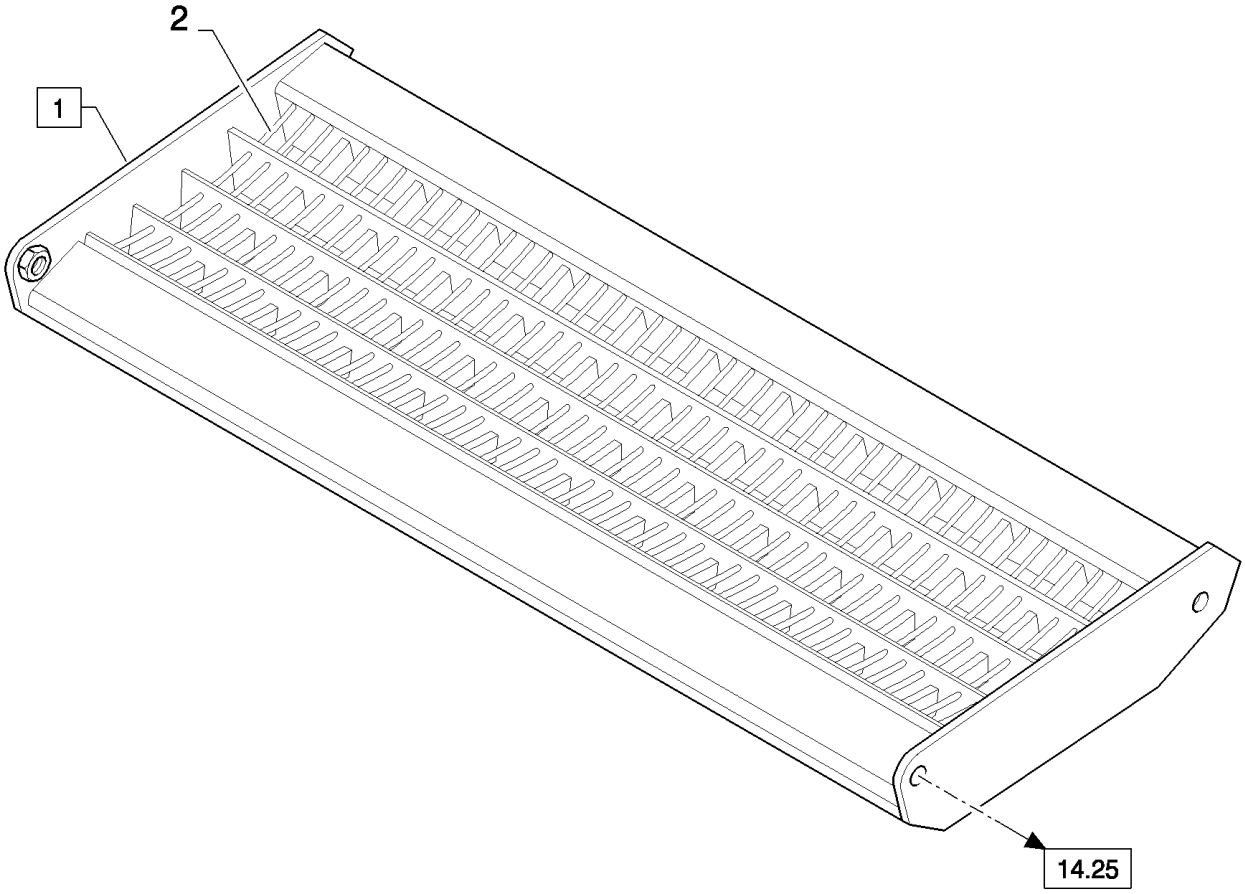

14.21(01) CONCAVE, BEATER

ссылка	Номер детали	Кол-во	Описание
1	84069727	1	CONCAVE, (2), FOR CX820, CX840, CX860, CX880 ONLY
1	84069728	1	CONCAVE, (2), FOR CX720, CX740, CX760, CX780 ONLY
2	84041788	AR	WIRE,

14.22(01) ROTARY SEPARATOR AND WEAR PLATES

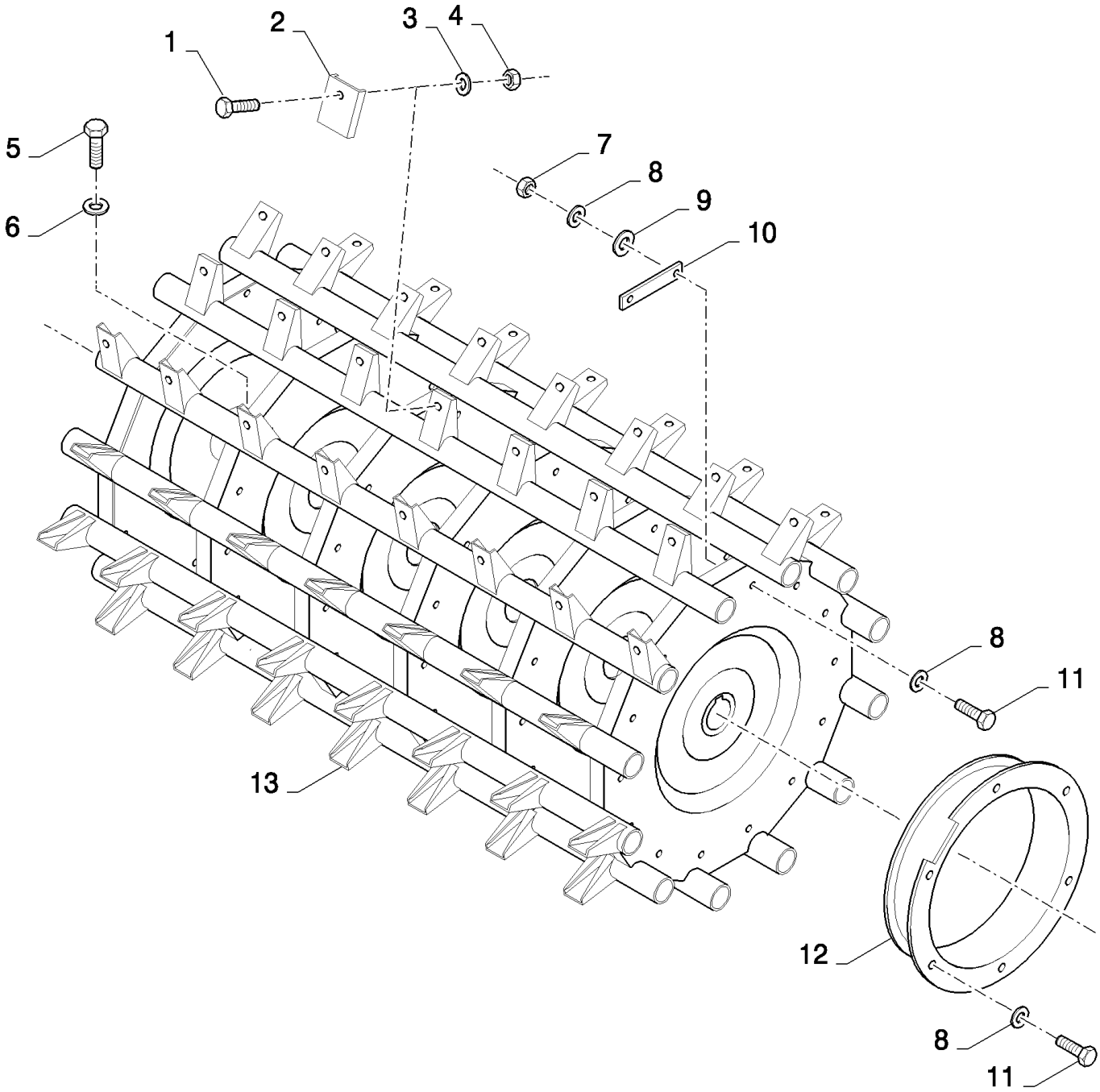

CX880 COMBINE - BASE UNIT (2/01-)

14.22(01) ROTARY SEPARATOR AND WEAR PLATES

ссылка	Номер детали	Кол-во	Описание
1	338949	AR	BOLT, CARRIAGE, Short NK, M10 x 25, Cl8.8, Full Thd,
2	9510423	AR	PLATE, SKID,
3	378244	AR	WASHER, M10,
4	100037	AR	NUT, M10 x 1.5, Cl 8,
5	9706704	2	BOLT, Hex, M10 x 35, 8.8, Full Thd,
6	320648	2	NUT, M10, Cl 8, M10
7	89706690	AR	NUT, M8, Cl 8,
8	412650	AR	WASHER, Belleville, M8,
9	378243	AR	WASHER, M8, , BSN C245
9	140041	AR	WASHER, M8 x 28 x 3, , ASN D246
10	481494	AR	PLATE, , BSN C245
10	351518	AR	PLATE, ADJUSTING, , ASN D246
11	120104	AR	SCREW, Hex, M8 x 20, 8.8,
11	43128	AR	BOLT, Hex, M8 x 30, 8.8,
12	9515746	2	PROTECTING COVER,
13	84069930	1	BEATER, , FOR CX820, CX840, CX860, CX880 ONLY
13	84069931	1	BEATER, , FOR CX720, CX740, CX760, CX780 ONLY
11	16043224	6	BOLT, Hex, M8 x 16, 8.8, Full Thd,

14.23(01) ROTARY SEPARATOR DRIVE AND SHAFT

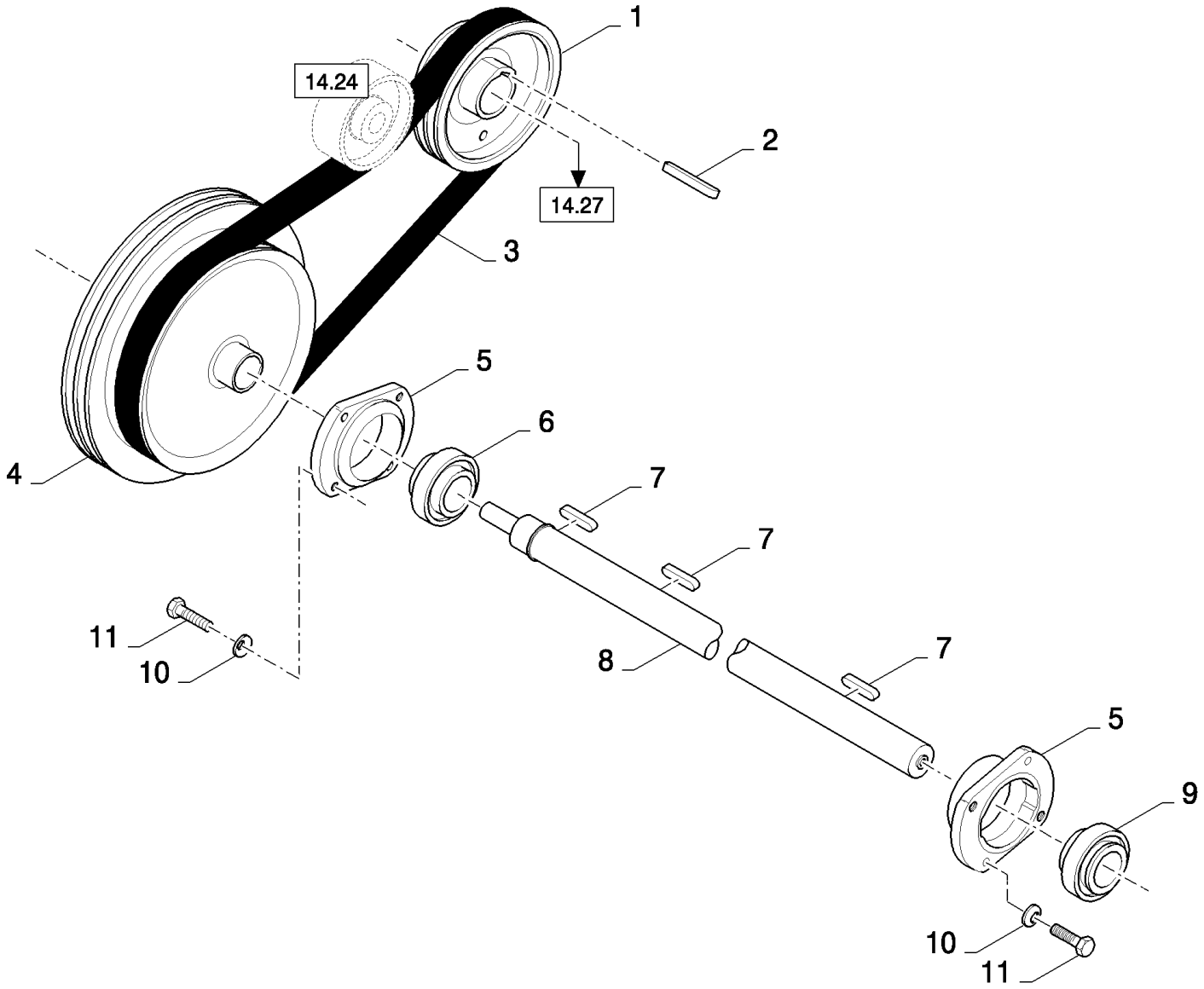

CX880 COMBINE - BASE UNIT (2/01-)

14.23(01) ROTARY SEPARATOR DRIVE AND SHAFT

ссылка	Номер детали	Кол-во	Описание
1	84069860	1	PULLEY, , BSN C415
1	84457073	1	PULLEY, , ASN D416
2	84061583	1	KEY,
3	84057393	1	BELT, TRANSMISSION, , BSN C415
3	84457079	1	BELT, , ASN D416
4	84069745	1	PULLEY,
5	84069750	2	HOUSING, BEARING,
6	84057133	1	BEARING ASSY,
7	323624	3	KEY,
8	84045354	1	SHAFT, , FOR CX820, CX840, CX860, CX880 ONLY
8	84069648	1	SHAFT, , FOR CX720, CX740, CX760, CX780 ONLY
9	84026027	1	BEARING ASSY,
10	140045	8	WASHER, SPRING, Belleville, M10,
11	120112	8	BOLT, Hex, M10 x 40, 8.8, Full Thd,

14.24(01) ROTARY SEPARATOR, IDLER

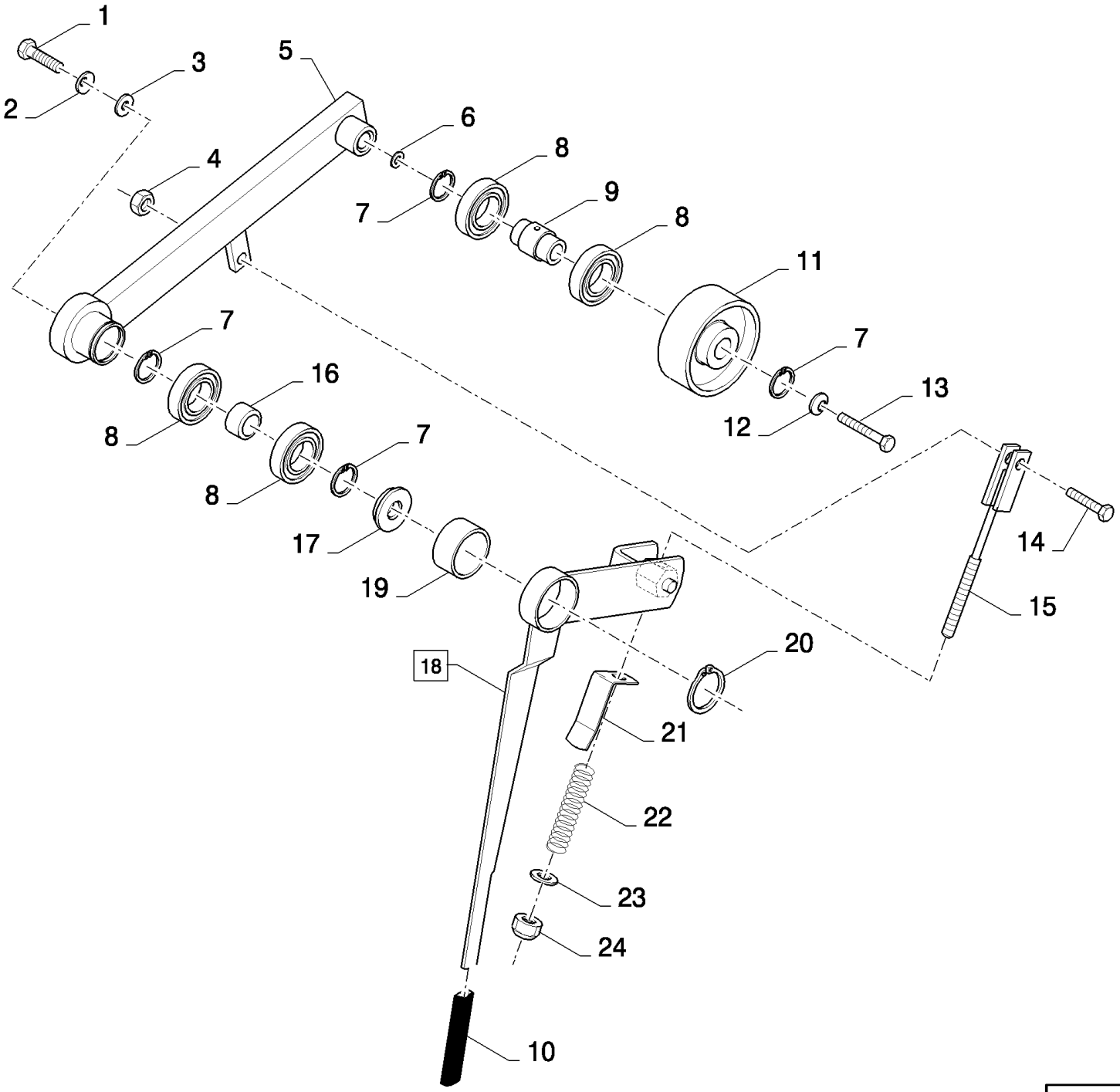

CX880 COMBINE - BASE UNIT (2/01-)

14.24(01) ROTARY SEPARATOR, IDLER

ссылка	Номер детали	Кол-во	Описание
1	9706687	1	SCREW, Hex, M12 x 30, 8.8,
2	140046	1	WASHER, Belleville, M12,
3	9839232	1	WASHER,
4	100037	1	NUT, M10 x 1.5, Cl 8,
5	84069859	1	LEVER,
6	378246	AR	WASHER, 16MM
7	370011	4	RING, SNAP, M52, Int,
8	443898	4	BEARING, BALL,
9	84069867	1	SLEEVE,
10	357545	1	HANDLE GRIP,
11	84069866	1	IDLER,
12	140048	1	WASHER, SPRING, Belleville, M16,
13	120093	1	BOLT, Hex, M16 x 80, 8.8,
14	120112	1	BOLT, Hex, M10 x 40, 8.8, Full Thd,
15	84069953	1	ROD, ADJUSTMENT, , BSN C415
15	84457188	1	ROD, ADJUSTMENT, , ASN D416
16	9837946	1	SLEEVE,
17	84069958	1	RING,
18	84069857	1	LEVER, (19)
19	9504249	1	SLEEVE,
20	300636	1	CIRCLIP, M70, Ext,
21	84069794	1	INDICATOR,
22	84069932	1	SPRING,
23	378245	1	WASHER, M12,
24	412126	1	NUT, LOCK, M12 x 1.75, Cl 8,

14.25(01) BEATER AND ROTARY SEPARATOR CONCAVE SUSPENSION

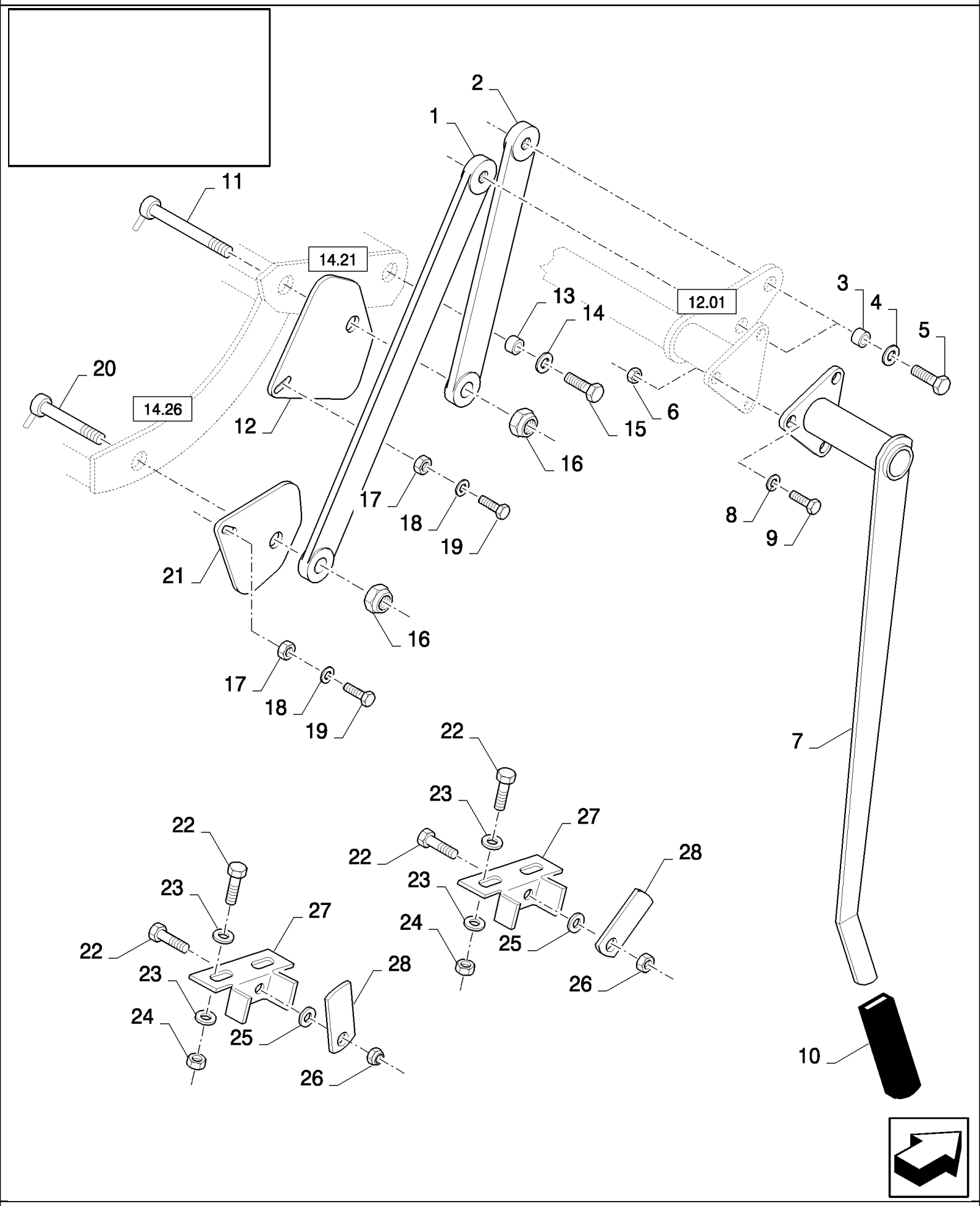

CX880 COMBINE - BASE UNIT (2/01-)

14.25(01) BEATER AND ROTARY SEPARATOR CONCAVE SUSPENSION

ссылка	Номер детали	Кол-во	Описание
1	84069856	2	SUPPORT,
2	84069853	2	SUPPORT,
3	84015600	4	BUSHING,
4	140048	4	WASHER, SPRING, Belleville, M16,
5	43167	4	BOLT, Hex, M16 x 30, 8.8, Full Thd,
6	9706685	3	NUT, M12, Cl 8,
7	84069765	1	LEVER, , BSN C277
7	84442301	1	LEVER, , ASN D278
8	394630	3	WASHER, 12MM
9	300389	3	BOLT, Hex, M12 x 35, 8.8, Full Thd, , BSN C277
9	328430	3	BOLT, CARRIAGE, Short NK, M12 x 35, Cl8.8, Full Thd, M12x35, ASN D278
10	357545	1	HANDLE GRIP,
11	84015604	2	PIN,
12	84035993	2	PLATE,
13	84061834	1	BUSHING, RH, BSN C265
13	84441473	1	BUSHING, RH, ASN D266
13	84031869	1	BUSHING, LH, BSN C265
13	84441472	1	BUSHING, LH, ASN D266
14	394631	2	WASHER, 16MM
15	350616	1	SCREW, Hex, M16 x 90, 8.8, RH
15	120091	1	BOLT, Hex, M16 x 60, 8.8, LH
16	9672396	4	NUT, LOCK, M20
17	86629542	4	NUT, LOCK, M8 x 1.25, Cl 8,
18	378243	4	WASHER, M8,
19	86507486	4	BOLT, CARRIAGE, Short NK, M8 x 20, Cl8.8, Full Thd, , BSN C265
19	308761	4	BOLT, CARRIAGE, Short NK, M8 x 25, Cl8.8, Full Thd, , ASN D266
20	84015605	2	PIN,
21	84035994	2	PLATE,
22	43139	6	SCREW, Hex, M10 x 25, 8.8, Full Thd, M10x25
23	140045	8	WASHER, SPRING, Belleville, M10,
24	100016	4	NUT, M10, Cl 8,
25	80300368	2	WASHER,
26	100037	2	NUT, M10 x 1.5, Cl 8,
27	84017313	2	SUPPORT,
28	84017312	2	PLATE, COVER,

14.26(01) CONCAVE, ROTARY SEPARATOR

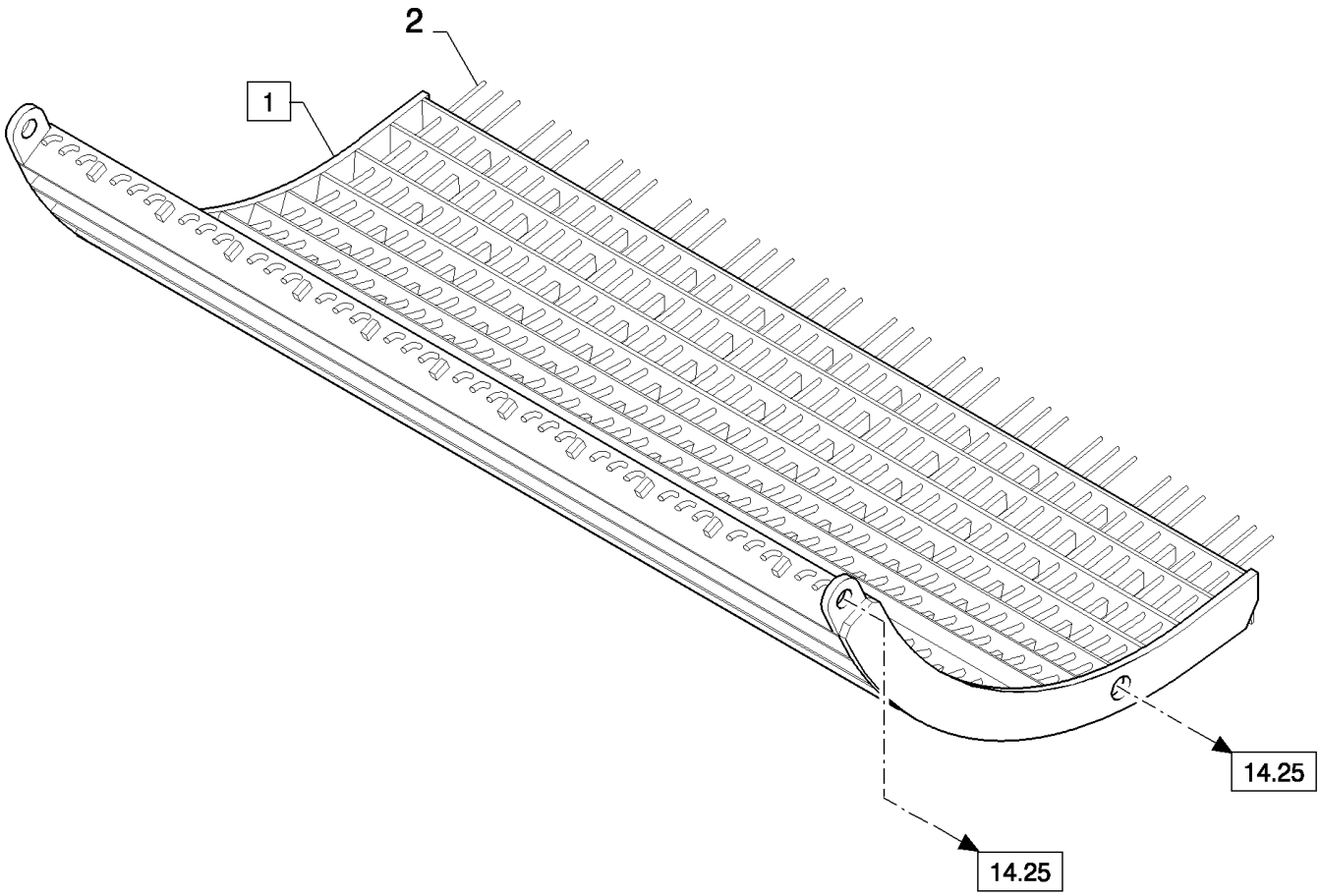

CX880 COMBINE - BASE UNIT (2/01-)

14.26(01) CONCAVE, ROTARY SEPARATOR

ссылка	Номер детали	Кол-во	Описание
1	84069725	1	CONCAVE, (2), FOR CX820, CX840, CX860, CX880 ONLY
1	84069721	1	CONCAVE, (2), FOR CX720, CX740, CX760, CX780 ONLY
2	84042176	AR	WIRE,

14.27(01) STRAW FLOW BEATER, DRUM

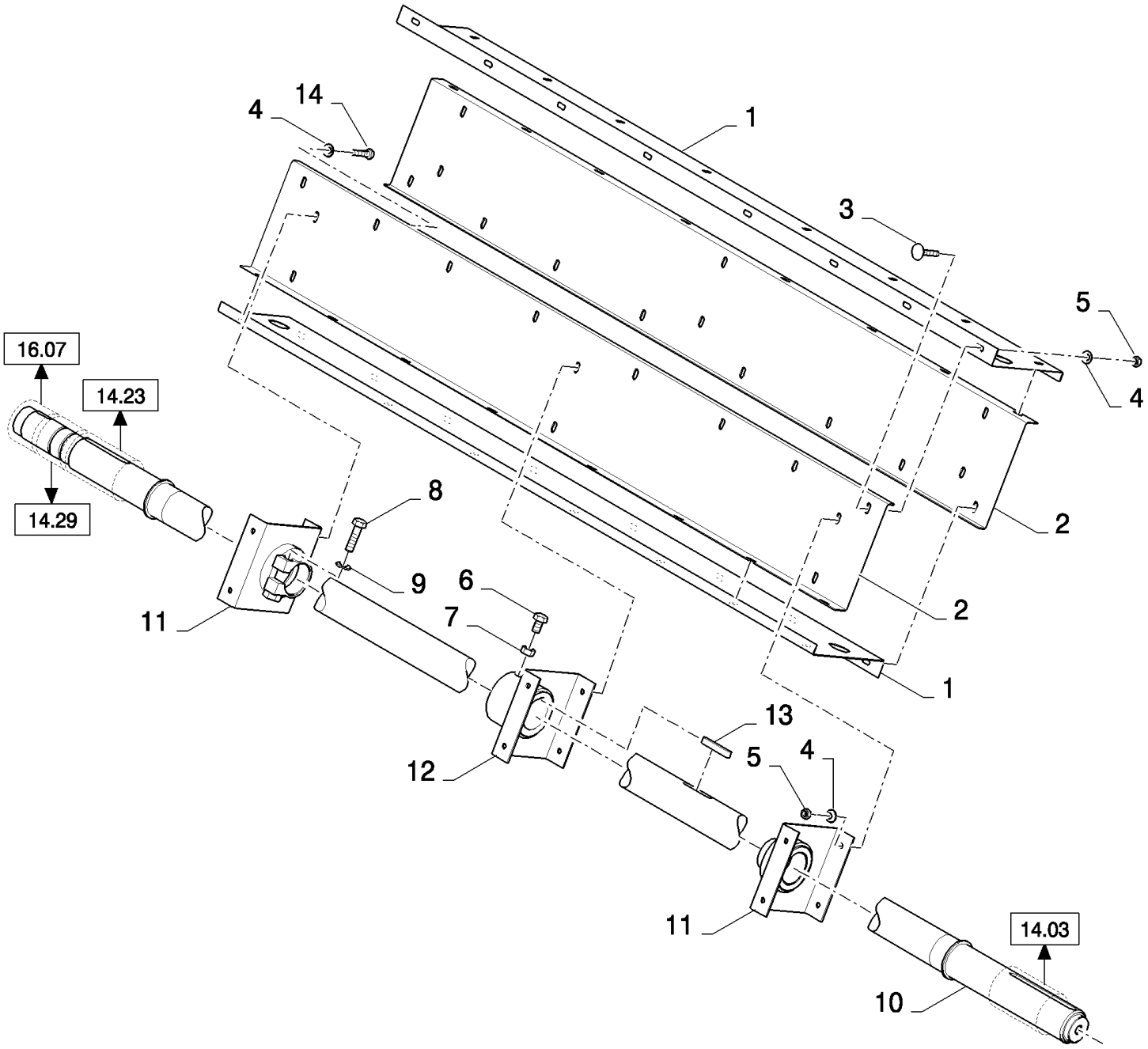

CX880 COMBINE - BASE UNIT (2/01-)

14.27(01) STRAW FLOW BEATER, DRUM

ссылка	Номер детали	Кол-во	Описание
1	84021097	2	PLATE, , FOR CX820, CX840, CX860, CX880 ONLY
1	84018102	2	COVER, , FOR CX720, CX740, CX760, CX780 ONLY
2	84021096	2	PLATE, , FOR CX820, CX840, CX860, CX880 ONLY
2	84018101	2	COVER, , FOR CX720, CX740, CX760, CX780 ONLY
3	86507486	AR	BOLT, CARRIAGE, Short NK, M8 x 20, Cl8.8, Full Thd,
4	412650	AR	WASHER, Belleville, M8,
5	89706690	AR	NUT, M8, Cl 8,
6	43140	1	BOLT, Hex, M10 x 30, 8.8, Full Thd,
7	320648	1	NUT, M10, Cl 8, M10
8	350616	2	SCREW, Hex, M16 x 90, 8.8,
9	140020	2	WASHER, M16 x 30 x 3,
10	84035740	1	SHAFT, , FOR CX820, CX840, CX860, CX880 ONLY
10	84069596	1	SHAFT, , FOR CX720, CX740, CX760, CX780 ONLY
11	84431088	2	FLANGE,
12	84069788	1	FLANGE,
13	323190	1	KEY,
14	120104	12	SCREW, Hex, M8 x 20, 8.8,

14.28(01) STRAW FLOW BEATER, DRIVE

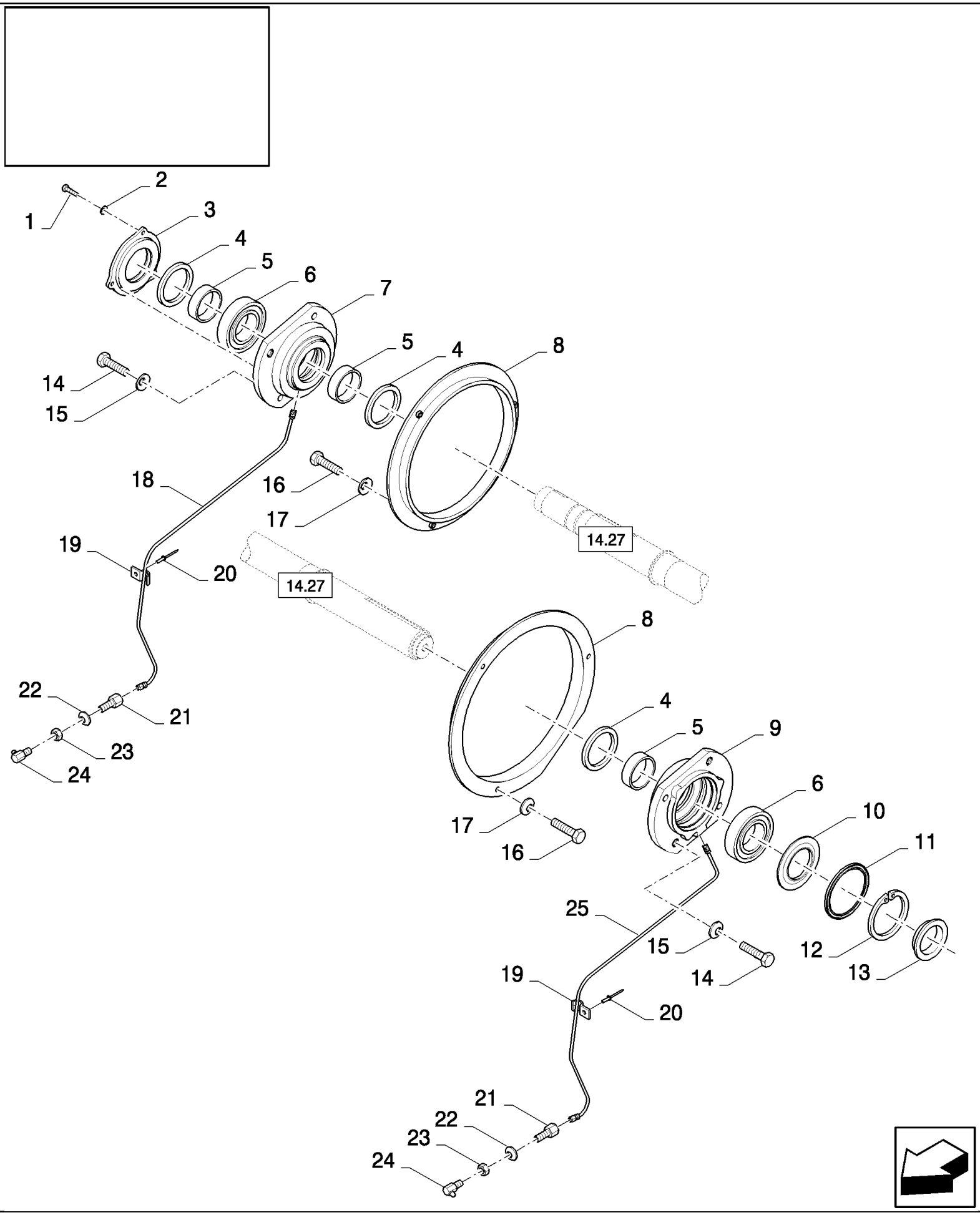

CX880 COMBINE - BASE UNIT (2/01-)

14.28(01) STRAW FLOW BEATER, DRIVE

ссылка	Номер детали	Кол-во	Описание
1	120100	3	BOLT, Hex, M6 x 20, 8.8,
2	322357	3	WASHER, SPRING, Belleville, M6,
3	84071478	1	COVER, , BSN C383
3	84035811	1	COVER, , ASN D384
4	9502933	3	GASKET, , BSN C315
4	84818400	3	GASKET, , ASN D316
5	84035763	3	RING,
6	84021946	2	BEARING ASSY, , BSN C315
6	84074234	2	BEARING, ROLLER, , ASN D316
7	84071550	1	HOUSING, BEARING,
8	84069791	2	RING,
9	84071488	1	HOUSING, BEARING,
10	84035806	1	RING,
11	442413	1	SPACER,
12	301652	1	RING, SNAP, M110, Int,
13	84035858	1	RING,
14	86629541	8	BOLT, Hex, M12 x 40, 8.8, Full Thd,
15	140046	8	WASHER, Belleville, M12,
16	120104	6	SCREW, Hex, M8 x 20, 8.8,
17	322358	6	WASHER, SPRING, Belleville, M8,
18	84064718	1	TUBE,
19	336748	2	CLAMP, , BSN C273
19	84814932	2	CLAMP, , ASN D274
20	445394	2	RIVET, Pop, M4.8 x 12.7,
21	9510459	2	CONNECTOR, HYD., , BSN C273
21	84817004	2	CONNECTOR, HYD., , ASN D274
22	140045	2	WASHER, SPRING, Belleville, M10,
23	100016	2	NUT, M10, Cl 8,
24	323713	2	NIPPLE, LUBE,
25	84064716	1	TUBE,

14.29(01) HEADER DRIVE, CLUTCH

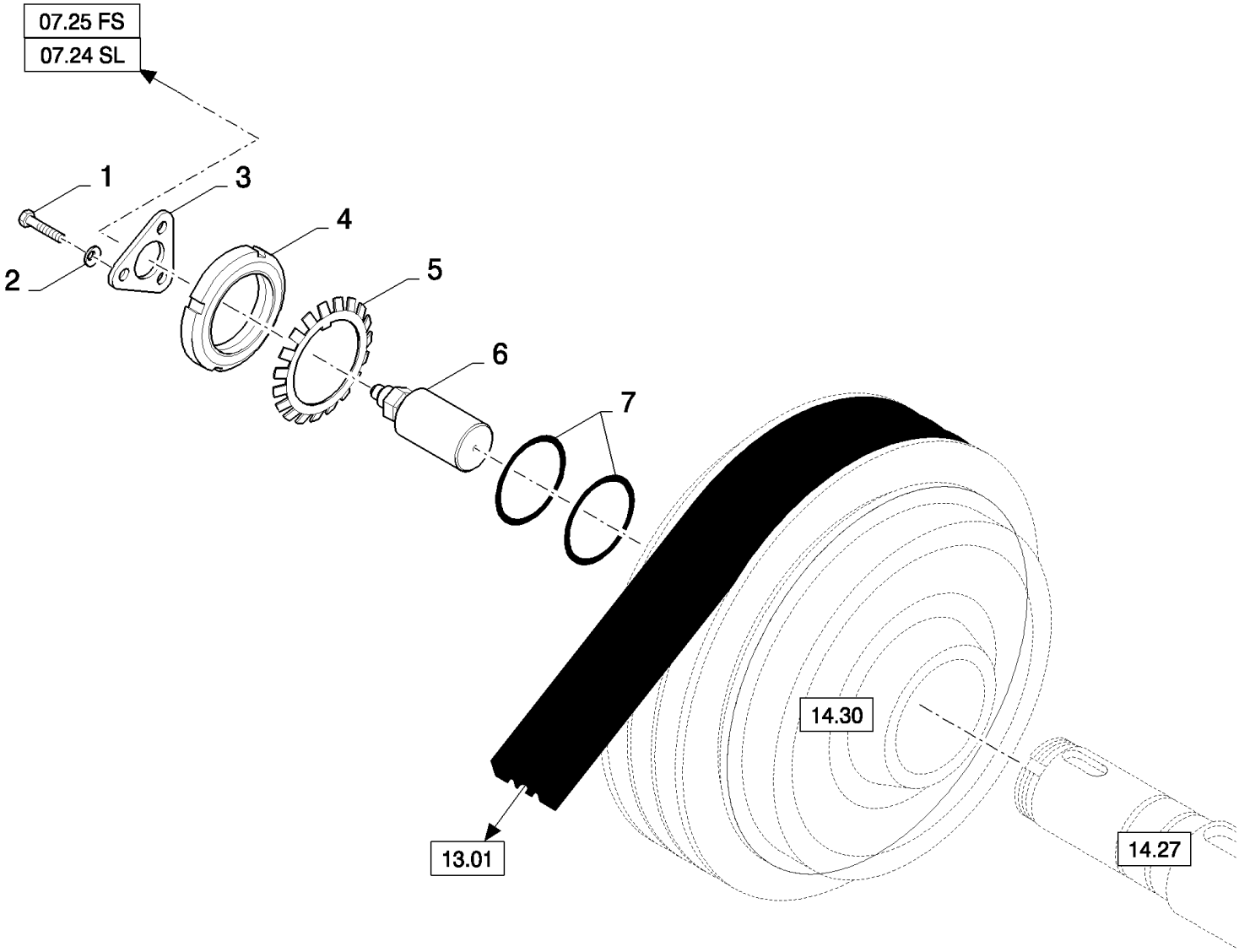

CX880 COMBINE - BASE UNIT (2/01-)

14.29(01) HEADER DRIVE, CLUTCH

ссылка	Номер детали	Кол-во	Описание
1	86508568	3	SCREW, Hex, M6 x 16, 8.8,
2	322357	3	WASHER, SPRING, Belleville, M6,
3	84072975	1	DISC,
4	9513020	1	NUT,
5	382867	1	WASHER, LOCK,
6	690658	1	COUPLING,
7	84061571	2	O-RING,

14.30(01) HEADER DRIVE, CLUTCH

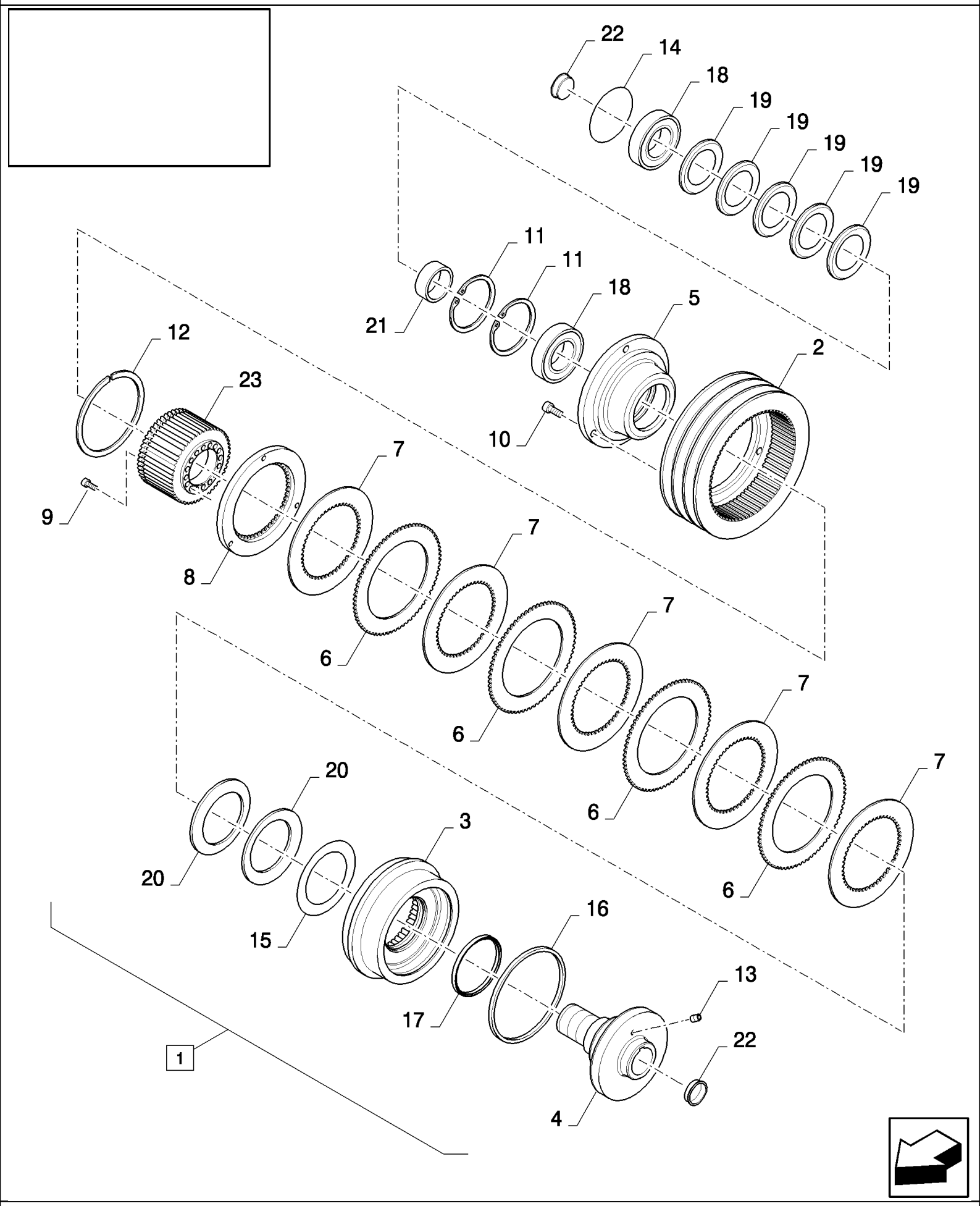

CX880 COMBINE - BASE UNIT (2/01-)

14.30(01) HEADER DRIVE, CLUTCH

ссылка	Номер детали	Кол-во	Описание
1	84073599	1	CLUTCH, (2 to 23)
2	84435842	1	PULLEY,
3	84435843	1	PISTON,
4	84435844	1	HUB,
5	84435845	1	HUB,
6	84435846	4	DISC,
7	84435848	5	DISC,
8	84435849	1	DISC,
9	84435850	16	SCREW,
10	84435851	3	SCREW,
11	388294	2	RING, SNAP, M125, Int,
12	84435852	1	CIRCLIP,
13	84435853	1	PLUG,
14	84435854	1	O-RING,
15	84435855	1	SPACER,
16	84435857	1	SEAL,
17	84435856	1	SEAL,
18	84435858	2	BEARING ASSY,
19	84435859	5	WASHER,
20	84435861	2	WASHER,
21	84435862	1	BUSHING,
22	84435863	2	PLUG,
23	84435841	1	HUB,

CX880 COMBINE - BASE UNIT (2/01-)

14.31(01) SLUG WRENCH

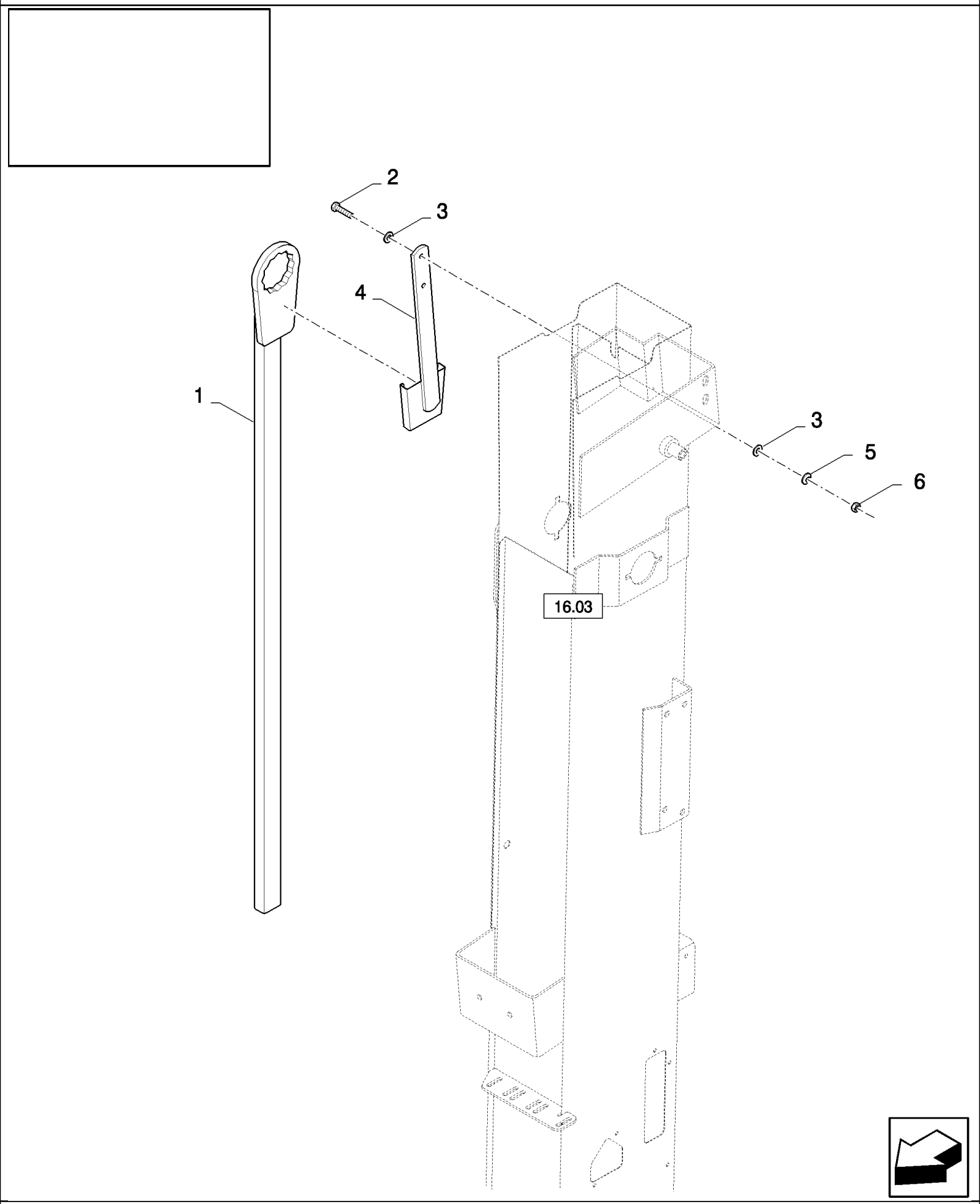

CX880 COMBINE - BASE UNIT (2/01-)

14.31(01) SLUG WRENCH

ссылка	Номер детали	Кол-во	Описание
1	84076928	1	KEY, LOCK,
2	43128	2	BOLT, Hex, M8 x 30, 8.8,
3	140041	4	WASHER, M8 x 28 x 3,
4	84434495	1	SUPPORT,
5	322358	2	WASHER, SPRING, Belleville, M8,
6	89706690	2	NUT, M8, Cl 8,

CLEANING	**NETTOYAGE**	**LIMPIEZA**	**RENSNING**
PULITURA	**REINIGUNG**	**LIMPEZA**	**REINIGING` **

SEC. 15

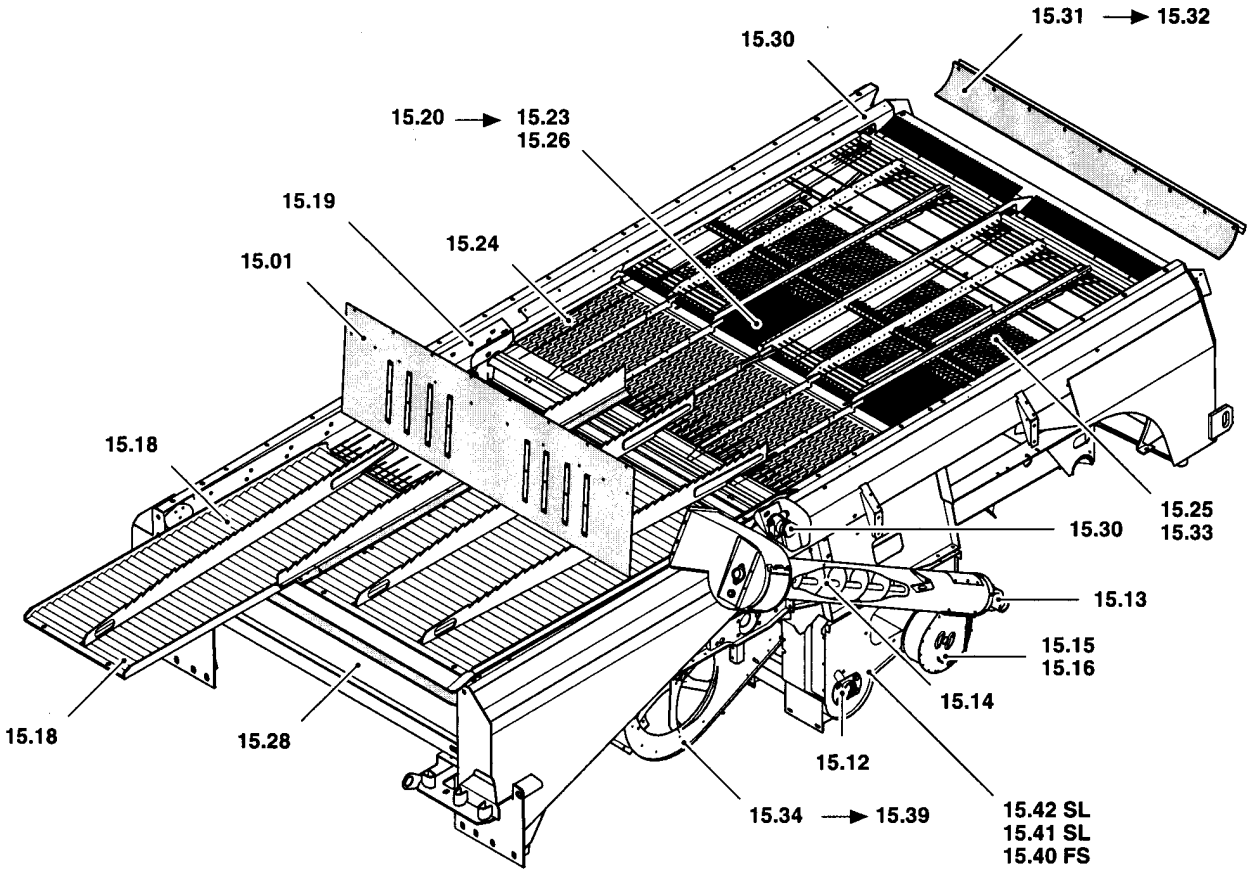

ссылка	Номер детали	Кол-во	Описание

CLEANING	**NETTOYAGE**	**LIMPIEZA**	**RENSNING**
PULITURA	**REINIGUNG**	**LIMPEZA**	**REINIGING**

SEC. 15

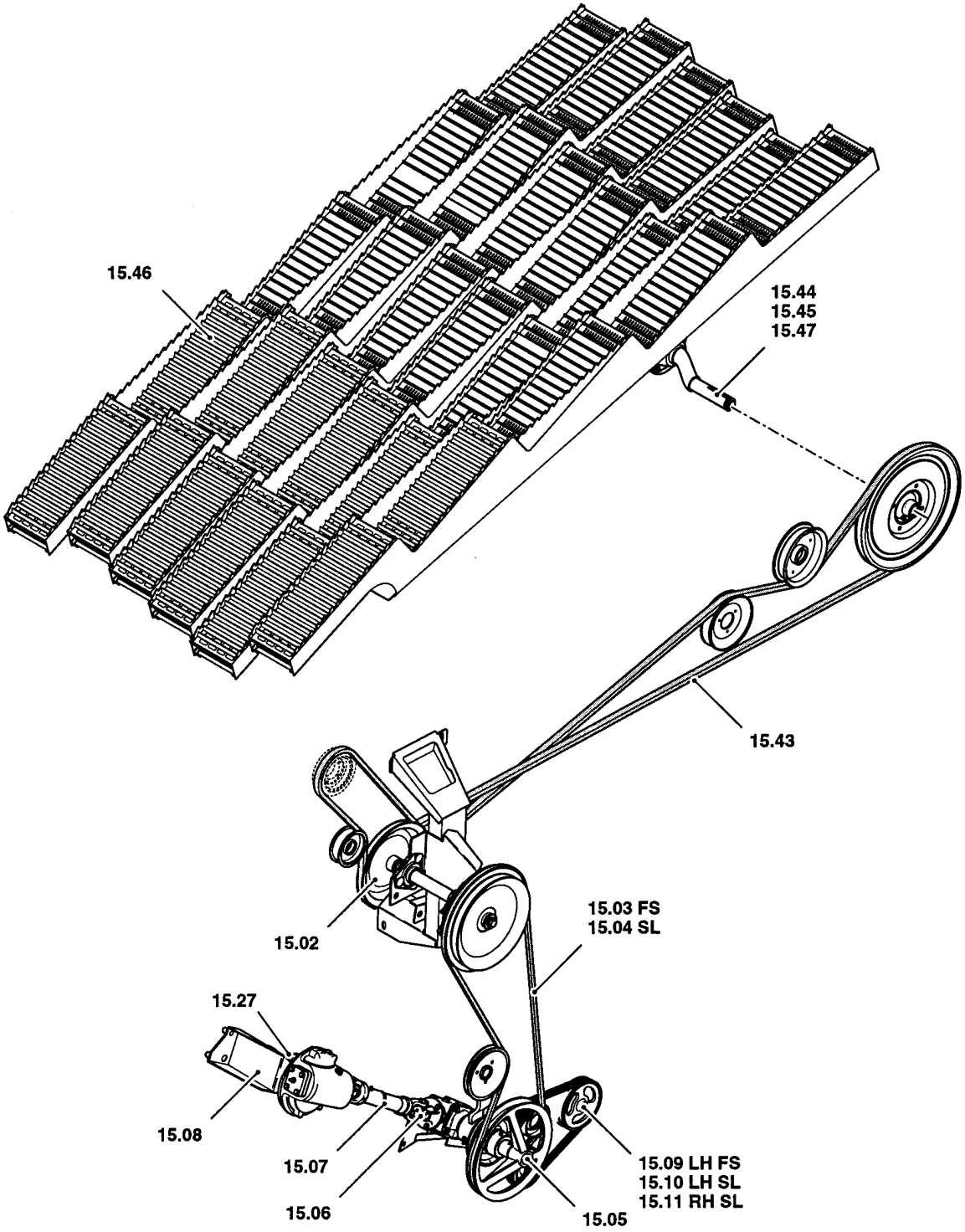

ссылка	Номер детали	Кол-во	Описание

15.01(01) TAILINGS ELEVATORS, DEFLECTORS- SELF-LEVELLING

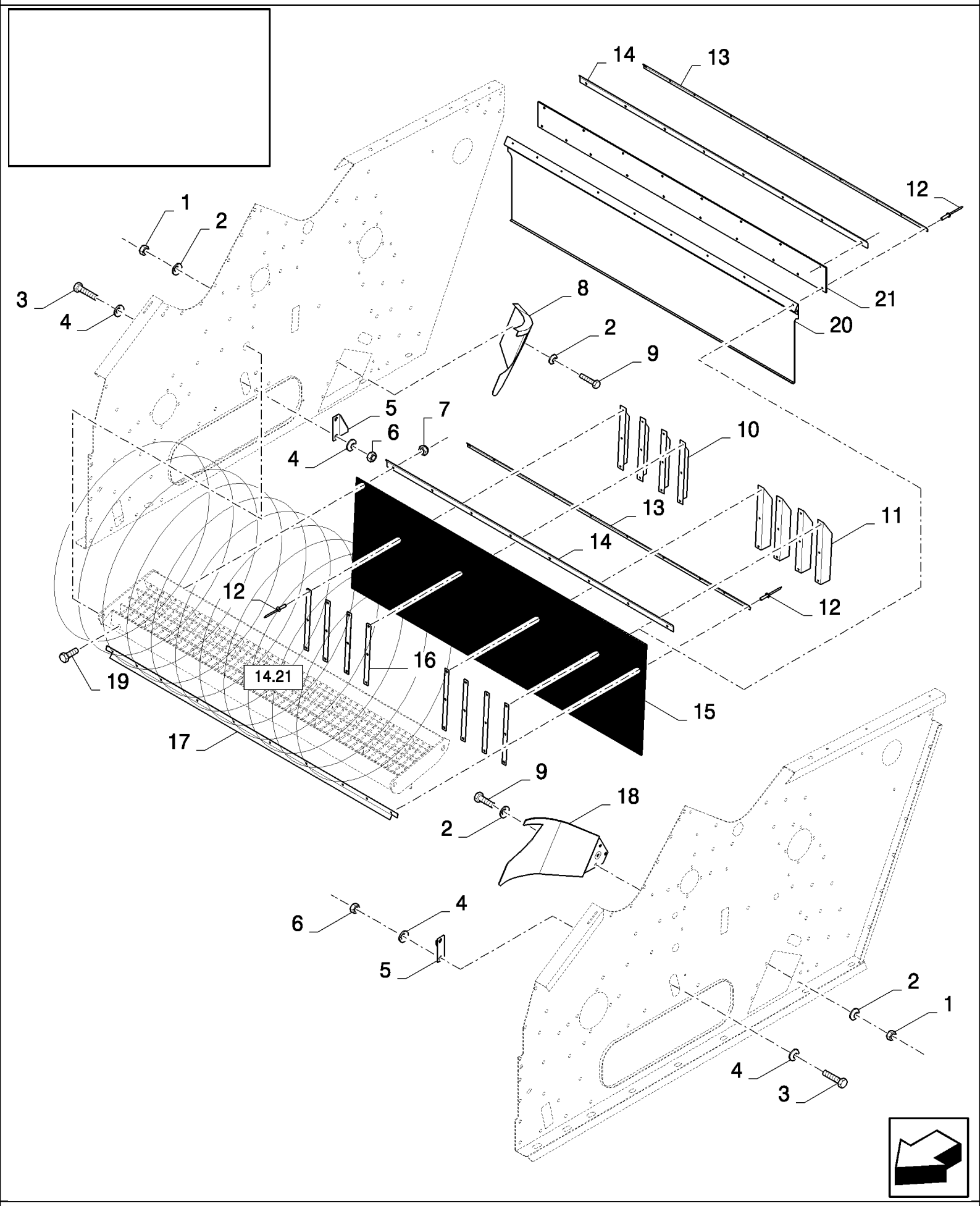

CX880 COMBINE - BASE UNIT (2/01-)

15.01(01) TAILINGS ELEVATORS, DEFLECTORS- SELF-LEVELLING

ссылка	Номер детали	Кол-во	Описание
1	89706690	AR	NUT, M8, Cl 8,
2	322358	AR	WASHER, SPRING, Belleville, M8,
3	86508568	AR	SCREW, Hex, M6 x 16, 8.8,
3	120100	AR	BOLT, Hex, M6 x 20, 8.8,
4	412649	8	WASHER, SPRING, Belleville, M6,
5	84069826	2	SUPPORT,
6	15896221	4	NUT, M6, Cl 10,
7	353308	AR	NUT, M6 x 1, Cl 8,
8	84069839	1	DIVIDER, , FOR CX820, CX840, CX860, CX880 ONLY
9	120104	AR	SCREW, Hex, M8 x 20, 8.8,
10	84069837	4	DIVIDER, , FOR CX820, CX840, CX860, CX880 ONLY, BSN C407
11	84069838	4	DIVIDER, , FOR CX820, CX840, CX860, CX880 ONLY, BSN C407
11	84069838	5	DIVIDER, , FOR CX720, CX740, CX760, CX780 ONLY, BSN C407
12	80445395	AR	RIVET,
13	747558	1	STRIP, , FOR CX820, CX840, CX860, CX880 ONLY
13	84989213	1	PLATE, FIXING, , FOR CX720, CX740, CX760, CX780 ONLY
14	84989215	1	PLATE, FIXING, , FOR CX820, CX840, CX860, CX880 ONLY
14	84989214	1	PLATE, FIXING, , FOR CX720, CX740, CX760, CX780 ONLY
15	84064948	1	CANVAS, , FOR CX820, CX840, CX860, CX880 ONLY, BSN C407
15	84071643	1	CANVAS, , FOR CX720, CX740, CX760, CX780 ONLY, BSN C407
16	84069010	8	PLATE, , FOR CX820, CX840, CX860, CX880 ONLY, BSN C407
16	84069010	5	PLATE, , FOR CX720, CX740, CX760, CX780 ONLY, BSN C407
17	84989218	1	PLATE, FIXING, , FOR CX820, CX840, CX860, CX880 ONLY, BSN C407
17	84989212	1	PLATE, FIXING, , FOR CX720, CX740, CX760, CX780 ONLY, BSN C407
18	84069836	1	DIVIDER, , FOR CX820, CX840, CX860, CX880 ONLY
18	84075055	1	GUIDE, , FOR CX720, CX740, CX760, CX780 ONLY
19	120100	AR	BOLT, Hex, M6 x 20, 8.8,
20	84443800	1	PLATE, , FOR CX820, CX840, CX860, CX880 ONLY
20	84443802	1	PLATE, , FOR CX720, CX740, CX760, CX780 ONLY
21	84443750	1	CANVAS, , FOR CX820, CX840, CX860, CX880 ONLY
21	84443753	1	CANVAS, , FOR CX720, CX740, CX760, CX780 ONLY

15.02(01) INTERMEDIATE SHAFT FOR CLEANING DRIVE

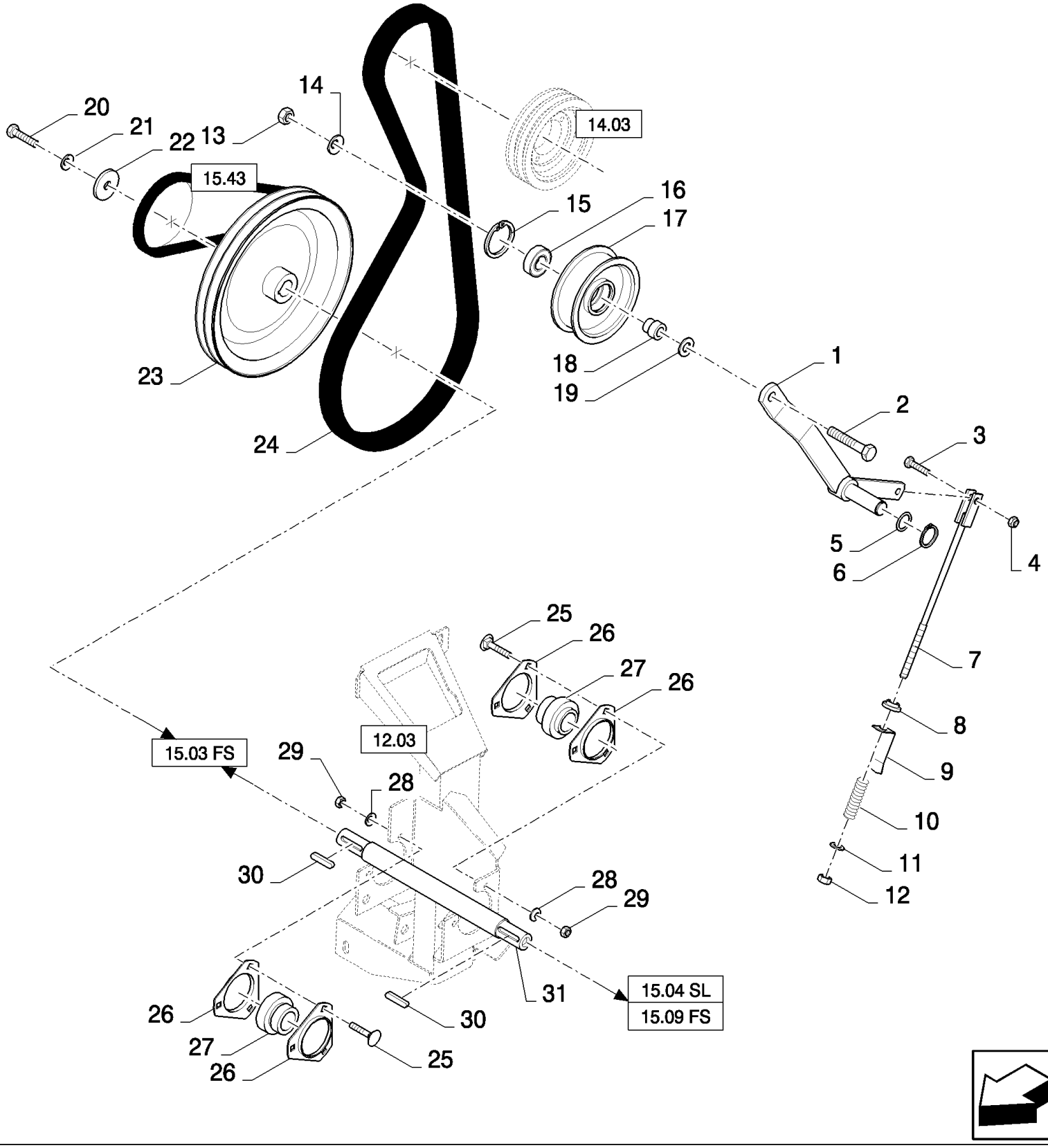

CX880 COMBINE - BASE UNIT (2/01-)

15.02(01) INTERMEDIATE SHAFT FOR CLEANING DRIVE

ссылка	Номер детали	Кол-во	Описание
1	84077037	1	LEVER,
2	120091	1	BOLT, Hex, M16 x 60, 8.8,
3	43140	1	BOLT, Hex, M10 x 30, 8.8, Full Thd,
4	100037	1	NUT, M10 x 1.5, Cl 8,
5	140103	1	WASHER,
6	370002	1	RING, SNAP, M25, Ext,
7	80447305	1	ROD,
8	439857	1	BUSHING,
9	84334730	1	INDICATOR,
10	84069932	1	SPRING,
11	378245	1	WASHER, M12, 10MM
12	412126	1	NUT, LOCK, M12 x 1.75, Cl 8,
13	100020	1	NUT, M16, Cl 8,
14	140048	1	WASHER, SPRING, Belleville, M16,
15	370011	1	RING, SNAP, M52, Int,
16	443898	1	BEARING, BALL,
17	84071981	1	WHEEL, IDLER,
18	9515145	1	BUSHING,
19	378246	AR	WASHER,
20	300389	1	BOLT, Hex, M12 x 35, 8.8, Full Thd,
21	140046	1	WASHER, Belleville, M12,
22	327084	1	WASHER,
23	84071732	1	PULLEY,
24	84057392	1	BELT, TRANSMISSION,
25	338949	6	BOLT, CARRIAGE, Short NK, M10 x 25, Cl8.8, Full Thd,
26	410434	4	FLANGE,
27	212606	2	BEARING ASSY,
28	140045	6	WASHER, SPRING, Belleville, M10,
29	100016	6	NUT, M10, Cl 8,
30	170010	2	KEY,
31	84334408	1	SHAFT, , FOR SELF LEVELLING ONLY
31	84076802	1	SHAFT, , FOR FIXED SHOE ONLY

15.03(01) SHAKER SHOE DRIVE, FIXED SHOE

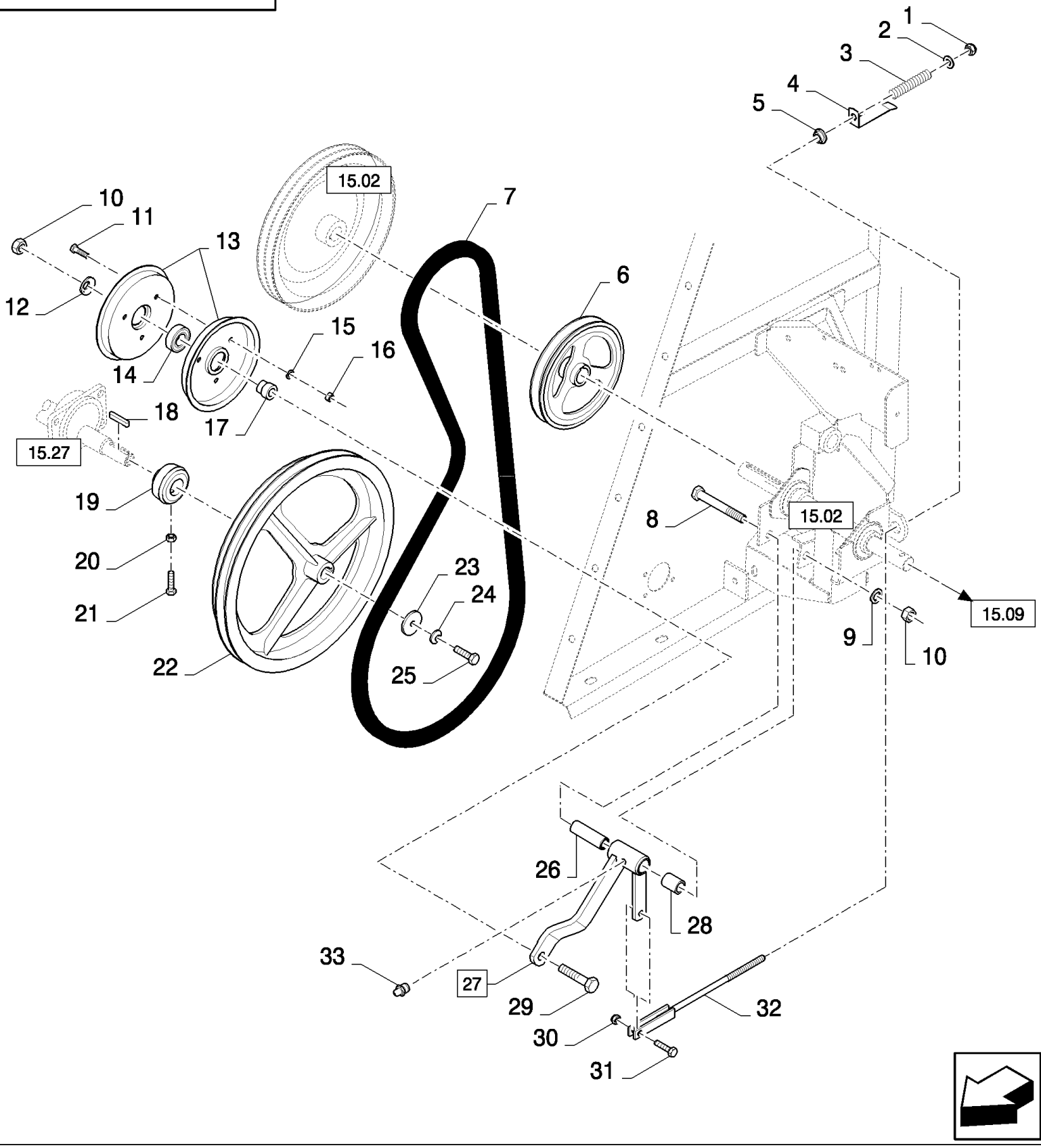

CX880 COMBINE - BASE UNIT (2/01-)

15.03(01) SHAKER SHOE DRIVE, FIXED SHOE

ссылка	Номер детали	Кол-во	Описание
1	412126	1	NUT, LOCK, M12 x 1.75, Cl 8,
2	378245	1	WASHER, M12,
3	337829	1	SPRING,
4	84072876	1	INDICATOR,
5	439857	1	BUSHING,
6	84076800	1	PULLEY,
7	84432785	1	BELT, TRANSMISSION,
8	321246	1	BOLT, Hex, M16 x 120, 8.8,
9	140020	1	WASHER, M16 x 30 x 3,
10	100020	2	NUT, M16, Cl 8,
12	140048	1	WASHER, SPRING, Belleville, M16,
13	426717	2	HALF-PULLEY,
14	443898	1	BEARING, BALL,
15	322358	6	WASHER, SPRING, Belleville, M8,
16	89706690	3	NUT, M8, Cl 8,
17	9515145	1	BUSHING,
18	170010	1	KEY,
19	89833140	1	HUB, , BSN C257
19	84440298	1	HUB, , ASN D258
20	100016	1	NUT, M10, Cl 8,
21	120112	1	BOLT, Hex, M10 x 40, 8.8, Full Thd,
22	84076782	1	PULLEY,
23	80395606	1	WASHER,
24	140046	1	WASHER, Belleville, M12,
25	9706687	1	SCREW, Hex, M12 x 30, 8.8,
26	84077106	1	SHAFT,
27	84077077	1	ARM, (28)
28	84057311	2	SLEEVE,
29	120091	1	BOLT, Hex, M16 x 60, 8.8,
30	100037	1	NUT, M10 x 1.5, Cl 8,
31	43140	1	BOLT, Hex, M10 x 30, 8.8, Full Thd,
32	84433168	1	TIE-ROD,
33	321204	1	NIPPLE, LUBE, M6 x 1, 16mm lg,
11	16043224	3	BOLT, Hex, M8 x 16, 8.8, Full Thd,

15.04(01) SHAKER SHOE AND TAILINGS ELEVATOR DRIVE, SELF LEVELLING

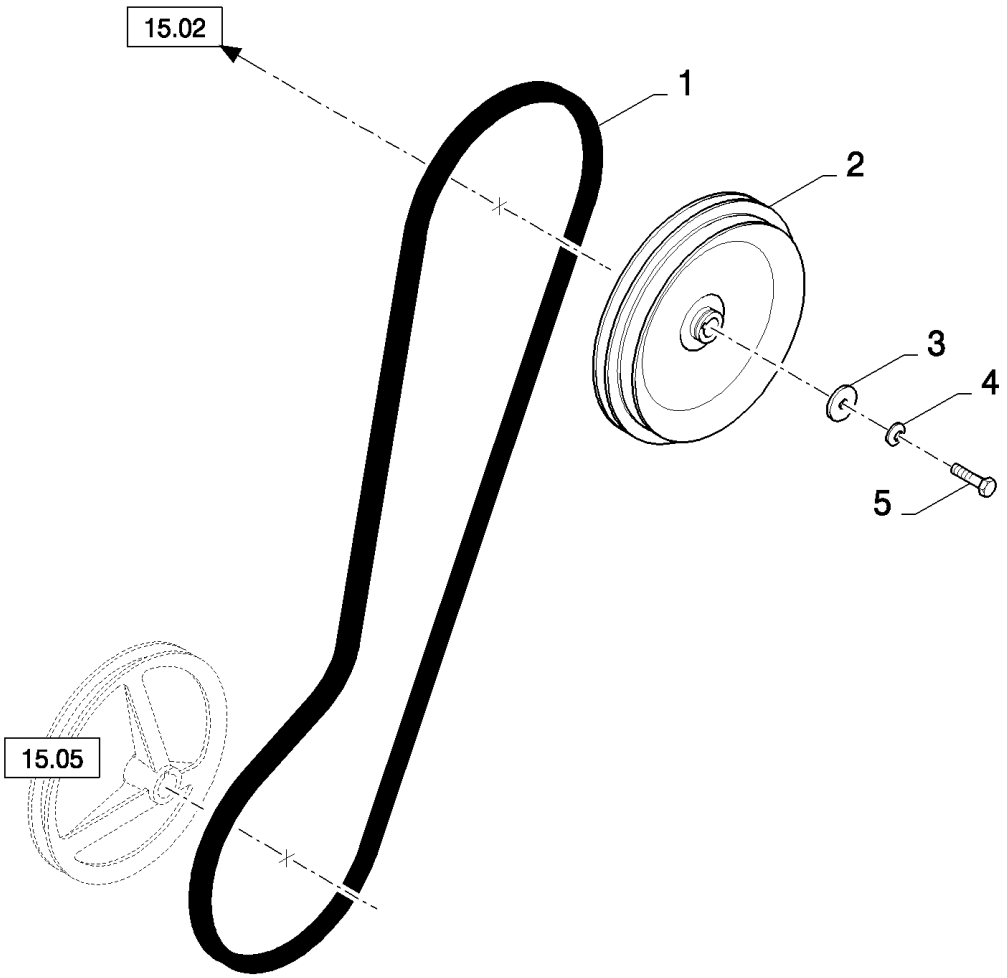

CX880 COMBINE - BASE UNIT (2/01-)

15.04(01) SHAKER SHOE AND TAILINGS ELEVATOR DRIVE, SELF LEVELLING

ссылка	Номер детали	Кол-во	Описание
1	84057874	1	BELT, TRANSMISSION,
2	84071717	1	PULLEY,
3	327084	1	WASHER,
4	140046	1	WASHER, Belleville, M12,
5	300389	1	BOLT, Hex, M12 x 35, 8.8, Full Thd,

15.05(01) SHAKER SHOE DRIVE - SELF-LEVELLING

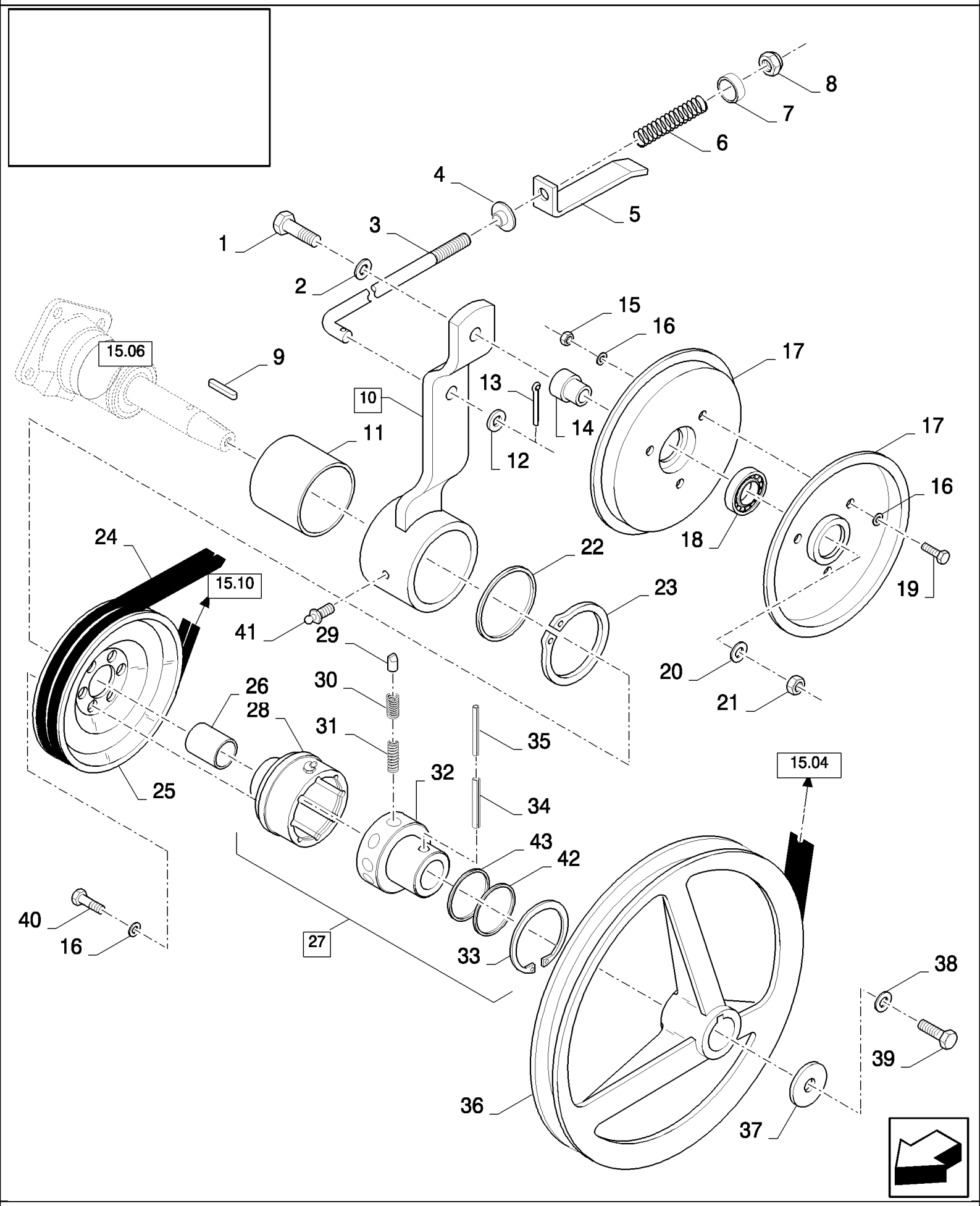

CX880 COMBINE - BASE UNIT (2/01-)

15.05(01) SHAKER SHOE DRIVE - SELF-LEVELLING

ссылка	Номер детали	Кол-во	Описание
1	379280	1	BOLT, Hex, M16 x 65, 10.9, Full Thd, M16x65
2	140048	2	WASHER, SPRING, Belleville, M16,
3	84058386	1	ROD,
4	439857	1	BUSHING,
5	84058341	1	INDICATOR, , BSN C277
5	84442167	1	INDICATOR, , ASN D278
6	84814907	1	SPRING, , BSN C277
6	84814907	1	SPRING, , ASN D278
7	84058340	1	WASHER,
8	412126	1	NUT, LOCK, M12 x 1.75, Cl 8,
9	170008	1	KEY,
10	84074408	1	ARM, (11)
11	84056770	1	SLEEVE,
12	140017	1	WASHER, M10 x 20 x 2,
13	130004	1	PIN, SPLIT (COTTER), M3.2 x 25,
14	9515145	1	BUSHING,
15	89706690	3	NUT, M8, Cl 8,
16	322358	12	WASHER, SPRING, Belleville, M8,
17	426717	2	HALF-PULLEY,
18	443898	1	BEARING, BALL,
20	378246	1	WASHER,
21	100020	1	NUT, M16, Cl 8,
22	84056679	1	WASHER,
23	9832771	1	CIRCLIP,
24	84056913	1	BELTS, SET OF 2,
25	84074212	1	PULLEY,
26	210022	1	SLEEVE,
27	84068829	1	CLUTCH, (28 to 33, 42, 43)
28	84074179	1	HOUSING,
29	386509	8	CAM, , BSN C427
29	275246	8	CAM, , ASN D428
30	386510	8	SPRING, Outer
31	386511	4	SPRING, Inner, BSN C277
31	386511	6	SPRING, Inner, BSN F278427
31	279346	6	SPRING, , ASN D428
32	84074178	1	HUB,
33	80300633	1	RING, SNAP,
34	388604	1	PIN, M10 x 55, Slotted, 10x55
35	412688	1	PIN, LOCK, M6 x 60, Slotted,
36	84074487	1	PULLEY,
37	9511052	1	WASHER, M12 x 44 x 4,
38	140046	1	WASHER, Belleville, M12,
39	300389	1	BOLT, Hex, M12 x 35, 8.8, Full Thd,
40	43127	6	BOLT, Hex, M8 x 25, 8.8,

CX880 COMBINE - BASE UNIT (2/01-)

15.05(01) SHAKER SHOE DRIVE - SELF-LEVELLING

ссылка	Номер детали	Кол-во	Описание
41	321204	1	NIPPLE, LUBE, M6 x 1, 16mm lg,
42	418509	1	RING, , BSN C277
42	86636027	1	RING, , ASN D278
43	411959	1	RING, , BSN C427
43	87325379	1	RING, , ASN D428
19	16043224	3	BOLT, Hex, M8 x 16, 8.8, Full Thd,

15.06(01) SHAKER SHOE DRIVE, GEARBOX - SELF-LEVELLING

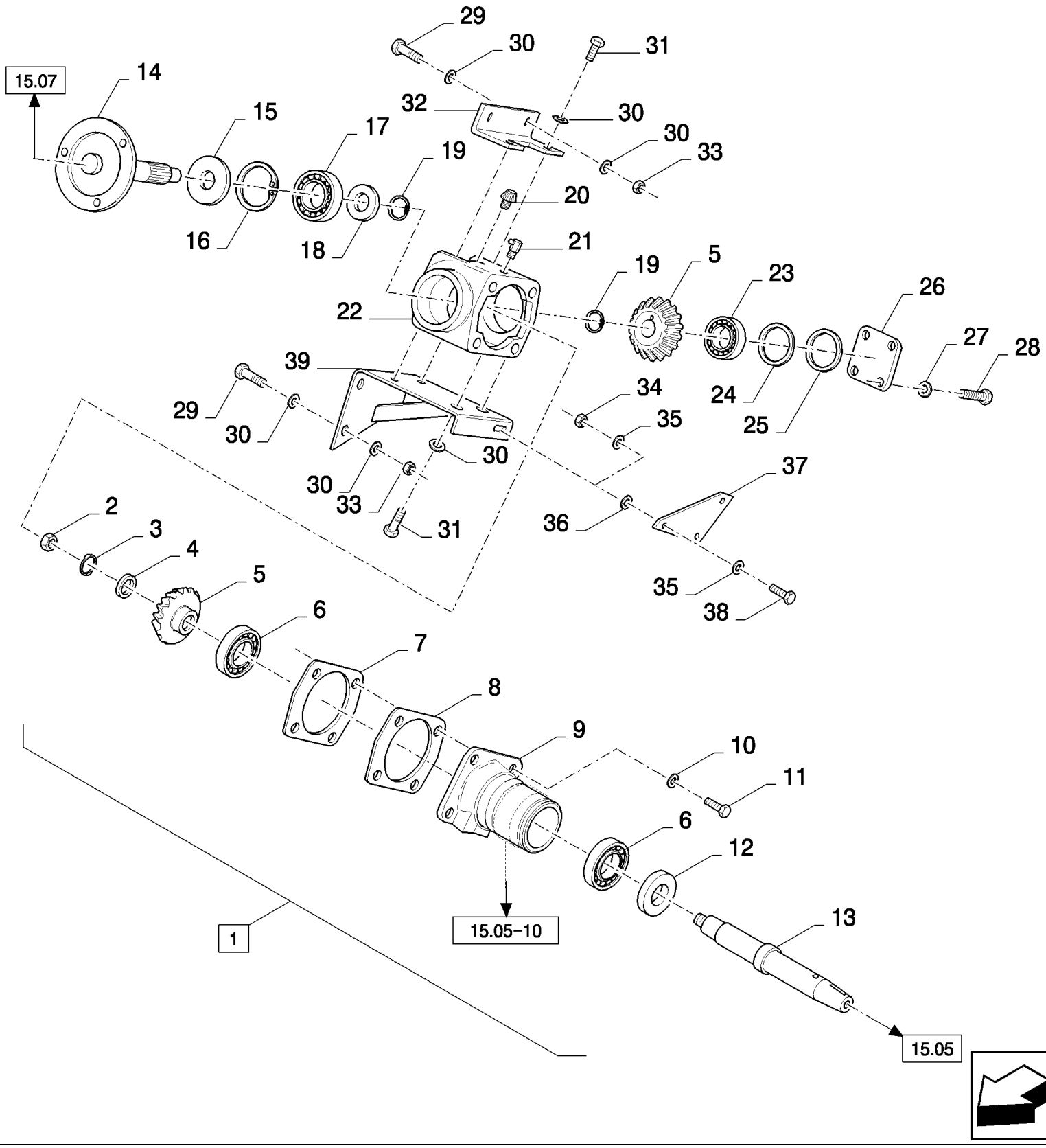

CX880 COMBINE - BASE UNIT (2/01-)

15.06(01) SHAKER SHOE DRIVE, GEARBOX - SELF-LEVELLING

ссылка	Номер детали	Кол-во	Описание
1	84068825	1	GEARBOX, (2 to 28)
2	364164	1	NUT, Thin, M16 x 1.5, Cl 04, M16x1.5, BSN C285
2	84440604	1	NUT, , ASN D286
3	442435	1	WASHER, LOCK, , BSN C285
4	378246	1	WASHER, 16MM, BSN C285
5	84078339	2	GEAR,
6	428466	2	BEARING ASSY,
7	434243	AR	PLATE, ADJUSTING, THK.:0.2MM
8	439757	AR	PLATE, ADJUSTING, THK.:0.5MM
9	84056663	1	HOUSING, BEARING,
10	322358	4	WASHER, SPRING, Belleville, M8,
11	120104	4	SCREW, Hex, M8 x 20, 8.8,
12	01119347	1	O-RING,
13	84056893	1	SHAFT,
14	84053872	1	SHAFT,
15	417722	1	SEAL,
16	370012	1	RING, SNAP, M62, Int,
17	309085	1	BEARING ASSY,
18	452194	1	WASHER,
19	370003	2	RING, SNAP, M30, Ext,
20	46566	1	BREATHER,
21	80719	1	NIPPLE, LUBE, 90є, 1/8" NPT x .84" lg,
22	9507274	1	HOUSING,
23	412287	1	BEARING ASSY,
24	440978	5	PLATE, ADJUSTING,
25	140124	4	PLATE, ADJUSTING,
26	84097369	1	COVER,
27	322357	4	WASHER, SPRING, Belleville, M6,
28	86508568	4	SCREW, Hex, M6 x 16, 8.8,
29	43139	5	SCREW, Hex, M10 x 25, 8.8, Full Thd, M10x25
30	140045	11	WASHER, SPRING, Belleville, M10,
31	43138	6	SCREW, Hex, M10 x 20, 8.8, Full Thd,
32	84071509	1	SUPPORT,
33	100016	5	NUT, M10, Cl 8,
34	89706690	1	NUT, M8, Cl 8,
35	412650	2	WASHER, Belleville, M8,
36	378243	2	WASHER, M8,
37	84073470	1	SUPPORT,
38	43127	1	BOLT, Hex, M8 x 25, 8.8,
39	84071512	1	SUPPORT,

15.07(01) SHAKER SHOE DRIVE, POWER TAKE -OFF - SELF-LEVELLING

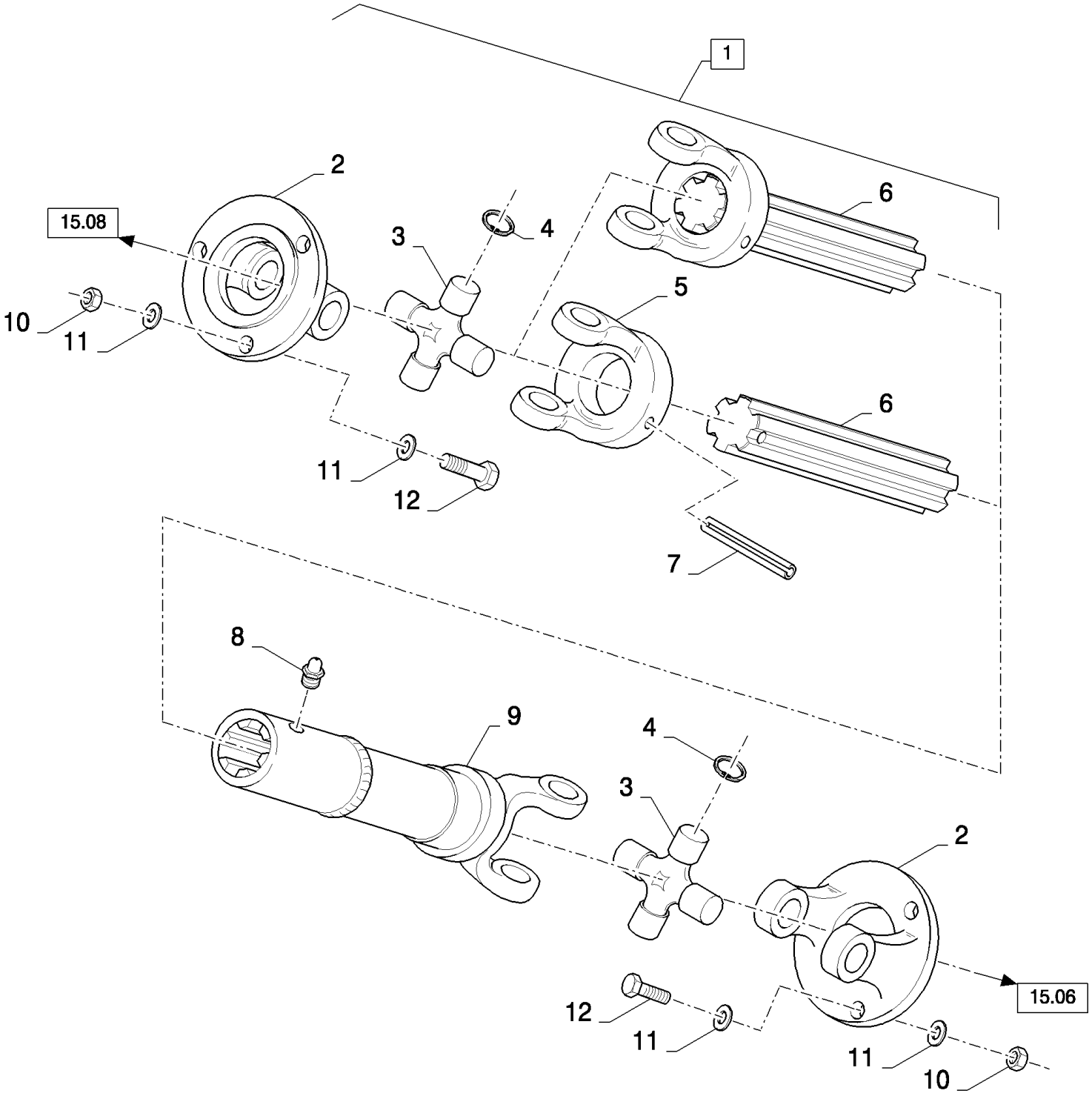

CX880 COMBINE - BASE UNIT (2/01-)

15.07(01) SHAKER SHOE DRIVE, POWER TAKE -OFF - SELF-LEVELLING

ссылка	Номер детали	Кол-во	Описание
1	84074377	1	SHAFT, PTO, (2 to 9), BSN C371
1	84454449	1	SHAFT, PTO, , ASN D372
2	449829	2	YOKE, , BSN C371
2	84454443	2	YOKE, , ASN D372
3	418936	2	SPIDER, , BSN C371
3	84454444	2	SPIDER, , ASN D372
4	456752	8	CIRCLIP, , BSN C371
4	84454445	8	CIRCLIP, , ASN D372
5	449832	1	YOKE, , BSN C371
6	449834	1	SHAFT, , BSN C371
6	84454447	1	YOKE, , ASN D372
7	412689	1	PIN, LOCK, M8 x 50, Slotted, , BSN C371
8	412014	1	NIPPLE, LUBE,
9	449831	1	SHAFT, , BSN C371
9	84454446	1	SHAFT, , ASN D372
10	100016	6	NUT, M10, Cl 8,
11	140045	12	WASHER, SPRING, Belleville, M10,
12	43140	6	BOLT, Hex, M10 x 30, 8.8, Full Thd,

15.08(01) SHAKER SHOE DRIVE, GEARBOX - SELF-LEVELLING

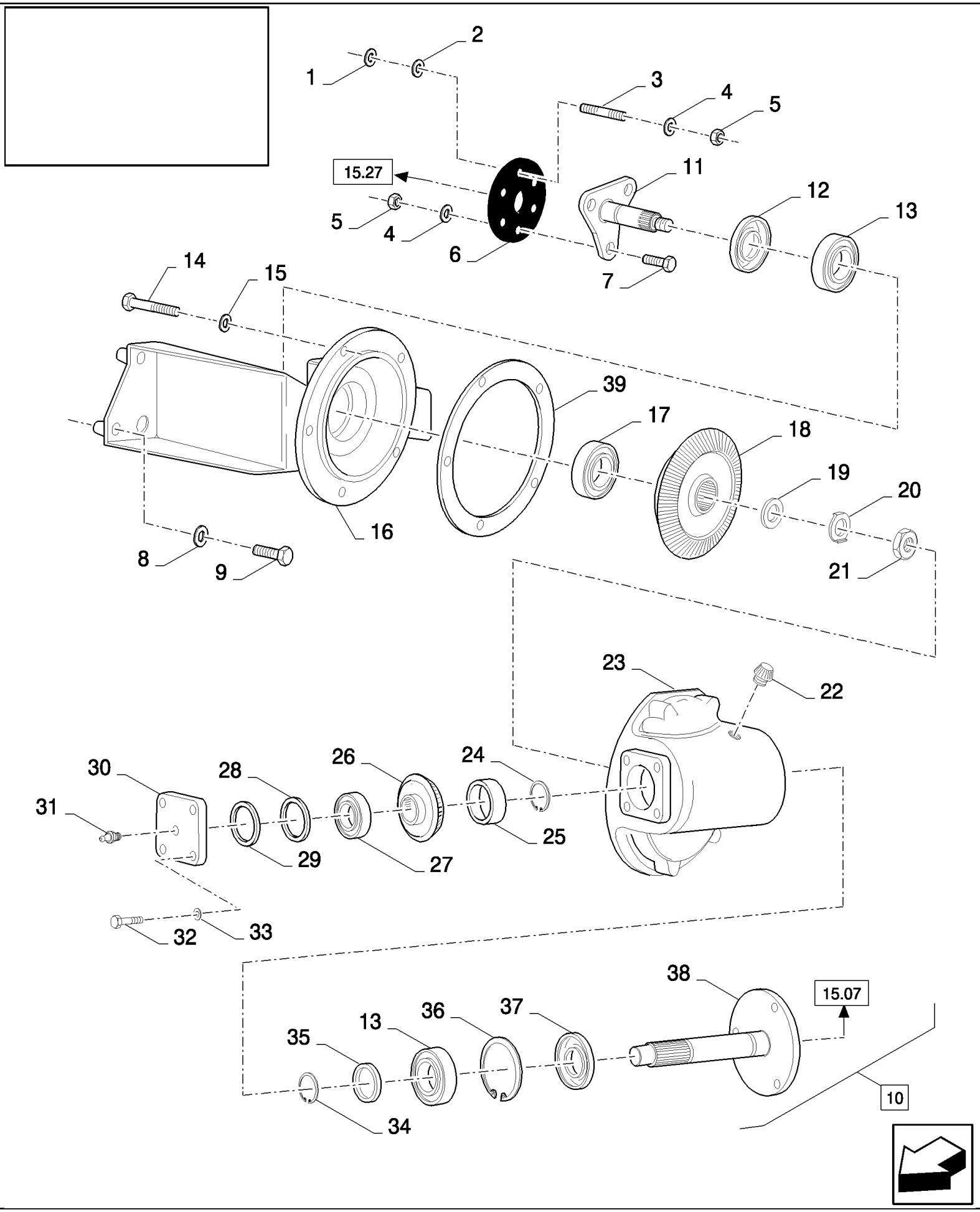

CX880 COMBINE - BASE UNIT (2/01-)

15.08(01) SHAKER SHOE DRIVE, GEARBOX - SELF-LEVELLING

ссылка	Номер детали	Кол-во	Описание
1	378244	3	WASHER, M10,
2	331160	6	WASHER,
3	84053871	3	STUD,
4	140045	6	WASHER, SPRING, Belleville, M10,
5	100016	6	NUT, M10, Cl 8,
6	9515000	1	JOINT, UNIVERSAL,
7	120069	3	SCREW, Hex, M10 x 50, 8.8,
8	140046	3	WASHER, Belleville, M12,
9	9706693	3	BOLT, Hex, M12 x 60, 8.8,
10	84068826	1	GEARBOX, (11 to 39)
11	452284	1	SHAFT, , BSN C285
11	84441130	1	SHAFT, , ASN D286
12	357923	1	SEAL, OIL,
13	309085	2	BEARING ASSY,
14	43127	5	BOLT, Hex, M8 x 25, 8.8,
14	43130	1	BOLT, Hex, M8 x 50, 8.8,
15	322358	6	WASHER, SPRING, Belleville, M8,
16	84053842	1	SUPPORT,
17	428466	1	BEARING ASSY,
18	439536	1	PINION, BEVEL, , BSN C285
18	84441107	1	PINION, BEVEL, , ASN D286
19	378246	1	WASHER, 16MM
20	442435	1	WASHER, LOCK,
21	364164	1	NUT, Thin, M16 x 1.5, Cl 04, M16x1.5
22	46566	1	BREATHER,
23	439754	1	HOUSING,
24	300629	1	RING, SNAP, M28, Ext,
25	446469	1	SPACER,
26	439535	1	PINION, BEVEL, , BSN C285
26	84441112	1	PINION, BEVEL, , ASN D286
27	412287	1	BEARING ASSY,
28	440978	5	PLATE, ADJUSTING,
29	140124	4	PLATE, ADJUSTING,
30	84097398	1	COVER,
31	321204	1	NIPPLE, LUBE, M6 x 1, 16mm lg,
32	86508568	4	SCREW, Hex, M6 x 16, 8.8,
33	322357	4	WASHER, SPRING, Belleville, M6,
34	370003	1	RING, SNAP, M30, Ext,
35	452194	1	WASHER,
36	370012	1	RING, SNAP, M62, Int,
37	417722	1	SEAL,
38	84053841	1	SHAFT, , BSN C285
38	84441110	1	SHAFT, , ASN D286
39	439800	3	PLATE, ADJUSTING,

15.09(01) TAILINGS ELEVATOR DRIVE, FIXED SHOE

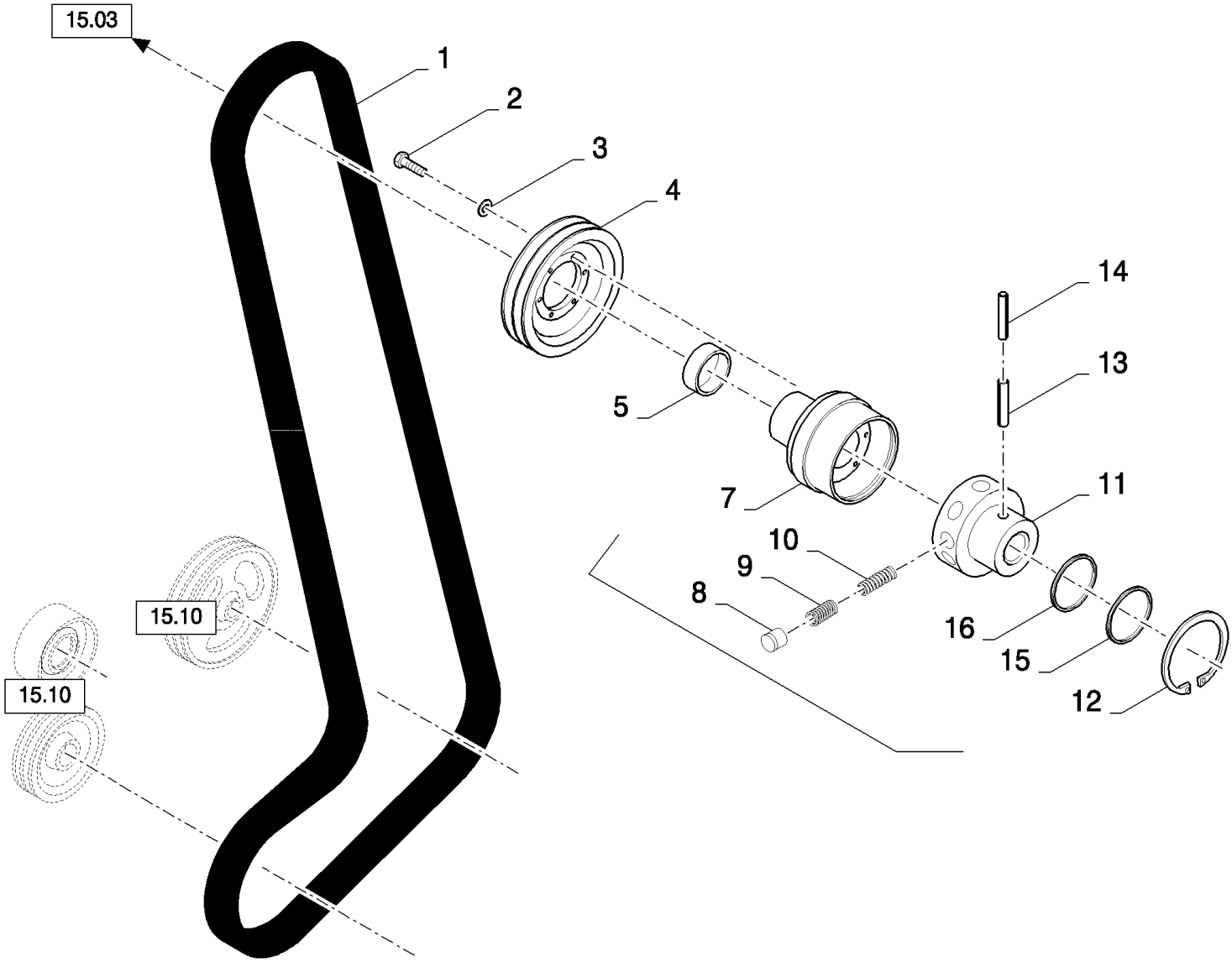

CX880 COMBINE - BASE UNIT (2/01-)

15.09(01) TAILINGS ELEVATOR DRIVE, FIXED SHOE

ссылка	Номер детали	Кол-во	Описание
1	84435035	1	BELT, TRANSMISSION,
2	43127	6	BOLT, Hex, M8 x 25, 8.8,
3	322358	6	WASHER, SPRING, Belleville, M8,
4	84074212	1	PULLEY,
5	210022	1	SLEEVE,
6	84068829	1	CLUTCH, (7 to 12,15,16)
7	84074179	1	HOUSING,
8	386509	8	CAM, , BSN C427
8	275246	8	CAM, , ASN D428
9	386510	8	SPRING, OUTER
10	386511	4	SPRING, INNER, BSN C277
10	386511	6	SPRING, , BSN F278427
10	279346	6	SPRING, , ASN D428
11	84074178	1	HUB,
12	80300633	1	RING, SNAP,
13	388604	1	PIN, M10 x 55, Slotted,
14	412688	1	PIN, LOCK, M6 x 60, Slotted,
15	418509	1	RING, , BSN C277
15	86636027	1	RING, , ASN D278
16	411959	1	RING, , BSN C427
16	87325379	1	RING, , ASN D428

15.10(01) TAILINGS ELEVATORS, DRIVE - LH

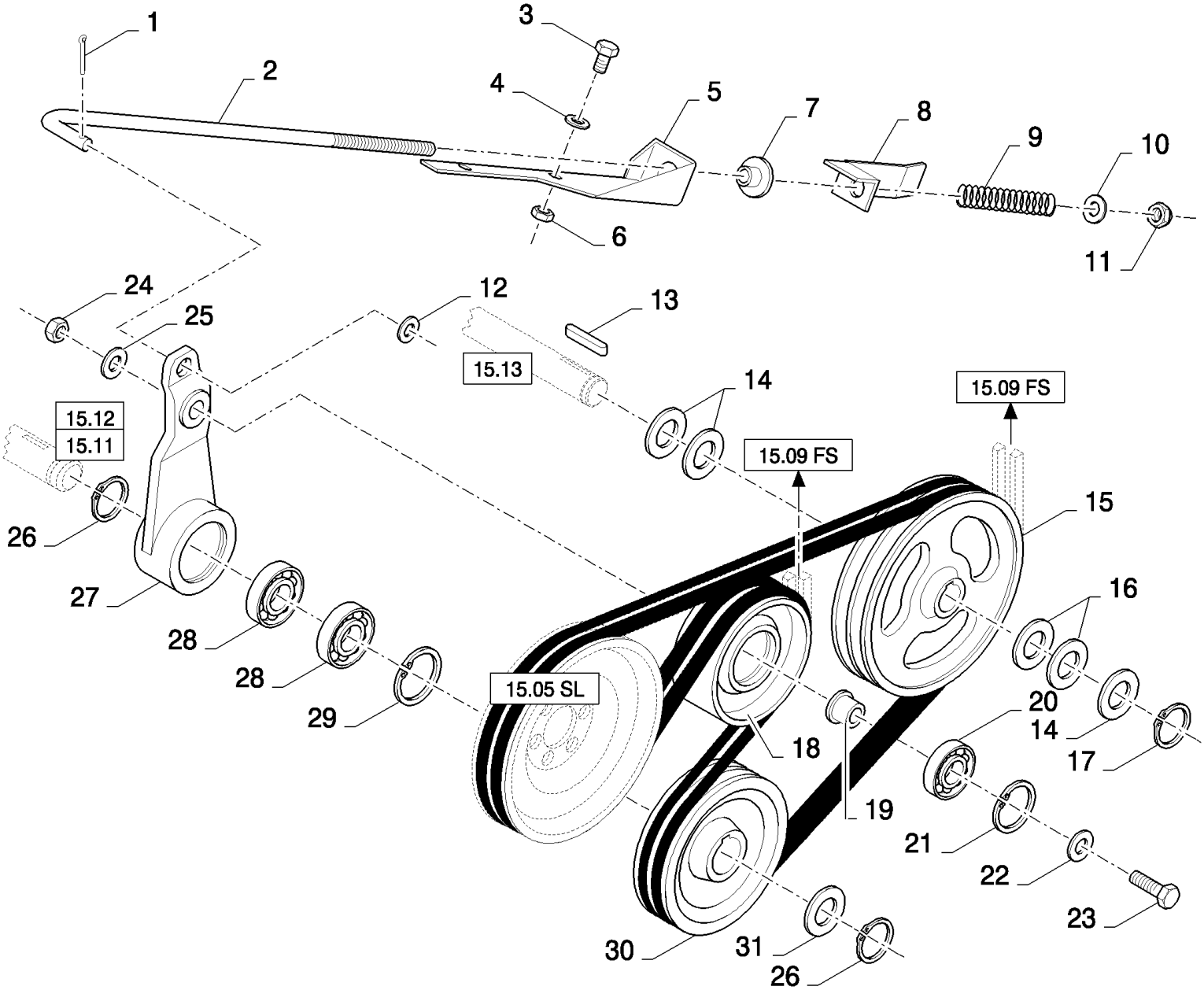

CX880 COMBINE - BASE UNIT (2/01-)

15.10(01) TAILINGS ELEVATORS, DRIVE - LH

ссылка	Номер детали	Кол-во	Описание
1	130003	1	PIN, SPLIT (COTTER), M3.2 x 20,
2	84056866	1	ROD,
3	120104	2	SCREW, Hex, M8 x 20, 8.8,
4	412650	4	WASHER, Belleville, M8,
5	84433804	1	SUPPORT,
6	89706690	2	NUT, M8, Cl 8,
7	439857	1	BUSHING,
8	84056867	1	INDICATOR, , BSN C277
8	84442145	1	INDICATOR, , ASN D278
9	440651	1	SPRING,
10	378245	1	WASHER, M12,
11	412126	1	NUT, LOCK, M12 x 1.75, Cl 8,
12	140017	1	WASHER, M10 x 20 x 2,
13	170008	1	KEY,
14	419854	AR	WASHER,
15	84074380	1	PULLEY,
16	444976	AR	WASHER,
17	370002	1	RING, SNAP, M25, Ext,
18	84074694	1	WHEEL, IDLER, , FOR SELF LEVELLING ONLY
18	84429812	1	WHEEL, IDLER, , FOR FIXED SHOE ONLY
19	84022798	1	BUSHING,
20	443898	1	BEARING, BALL,
21	370011	1	RING, SNAP, M52, Int,
22	543043	1	WASHER,
23	300512	1	SCREW, Hex, M12 x 55, 8.8,
24	9706685	1	NUT, M12, Cl 8,
25	140046	1	WASHER, Belleville, M12,
26	11068376	2	RING, SNAP, M35, Ext x 1.5 Thk,
27	84074536	1	ARM,
28	364908	2	BEARING ASSY,
29	370012	1	RING, SNAP, M62, Int,
30	84074486	1	PULLEY,
31	140119	1	WASHER,

15.11(01) TAILINGS ELEVATORS, BOTTOM AUGER AND (RH)DRIVE

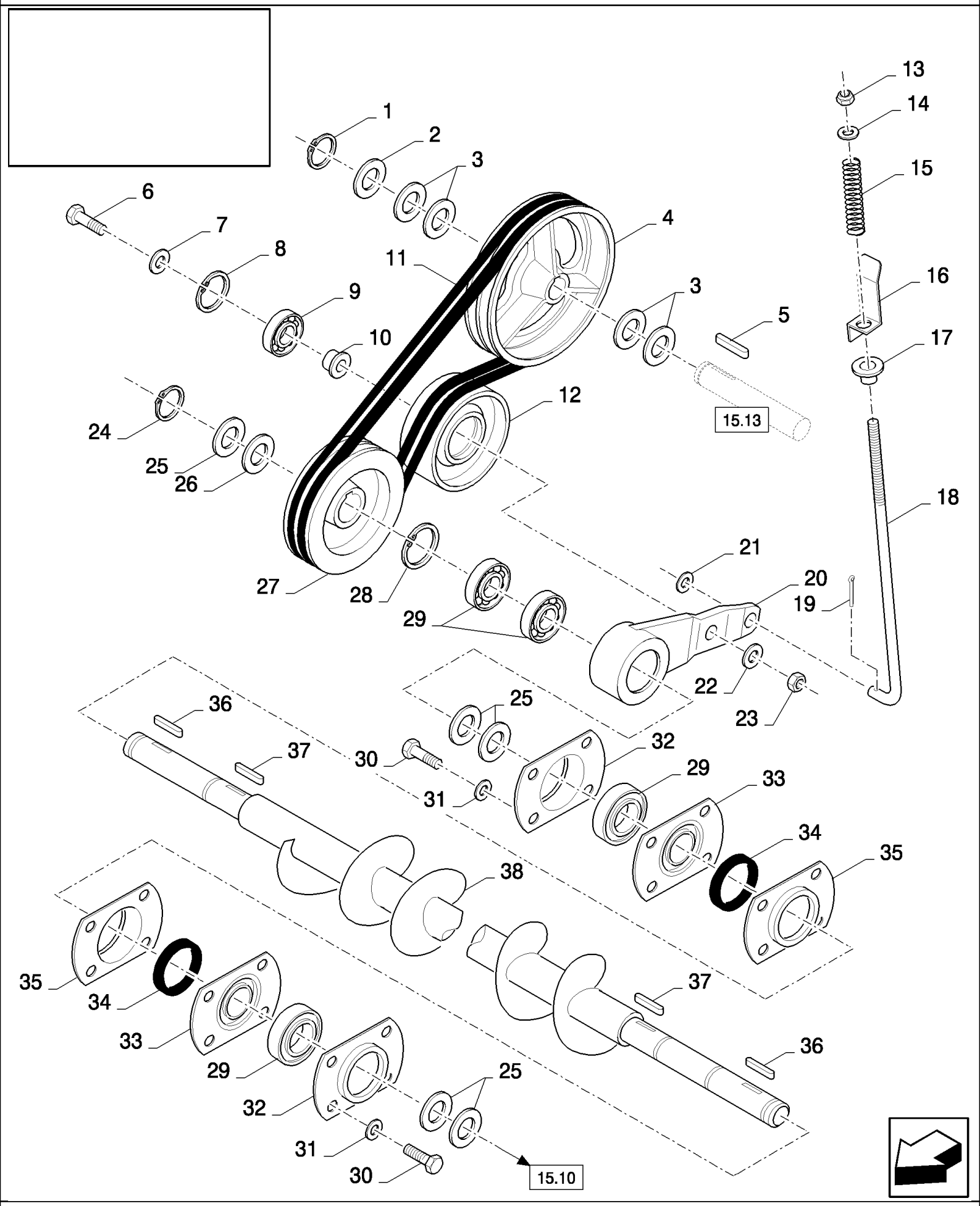

CX880 COMBINE - BASE UNIT (2/01-)

15.11(01) TAILINGS ELEVATORS, BOTTOM AUGER AND (RH)DRIVE

ссылка	Номер детали	Кол-во	Описание
1	370002	1	RING, SNAP, M25, Ext,
2	419854	AR	WASHER,
3	444976	AR	WASHER,
4	84074380	1	PULLEY,
5	170008	1	KEY,
6	300512	1	SCREW, Hex, M12 x 55, 8.8,
7	543043	1	WASHER,
8	370011	1	RING, SNAP, M52, Int,
9	443898	1	BEARING, BALL,
10	84022798	1	BUSHING,
11	84058339	1	SET OF BELTS,
12	84074694	1	WHEEL, IDLER,
13	412126	1	NUT, LOCK, M12 x 1.75, Cl 8,
14	378245	1	WASHER, M12,
15	440651	1	SPRING,
16	84056867	1	INDICATOR, , BSN C277
16	84442145	1	INDICATOR, , ASN D278
17	439857	1	BUSHING,
18	84058052	1	ROD,
19	130003	1	PIN, SPLIT (COTTER), M3.2 x 20,
20	84074536	1	ARM,
21	140017	1	WASHER, M10 x 20 x 2,
22	140046	1	WASHER, Belleville, M12,
23	9706685	1	NUT, M12, Cl 8,
24	11068376	1	RING, SNAP, M35, Ext x 1.5 Thk,
25	140119	AR	WASHER,
26	84058053	AR	WASHER,
27	84074486	1	PULLEY,
28	370012	1	RING, SNAP, M62, Int,
29	364908	4	BEARING ASSY,
31	322358	8	WASHER, SPRING, Belleville, M8,
32	9511041	2	FLANGE,
33	444104	2	COVER,
34	220010	2	ELEMENT, SEALING,
35	444105	2	COVER,
36	354775	2	KEY,
37	323190	2	KEY,
38	84074909	1	AUGER, , STANDARD
38	84078346	1	AUGER, , REINFORCED
30	16043224	8	BOLT, Hex, M8 x 16, 8.8, Full Thd,

15.13(01) TAILINGS ELEVATORS, GEARBOX

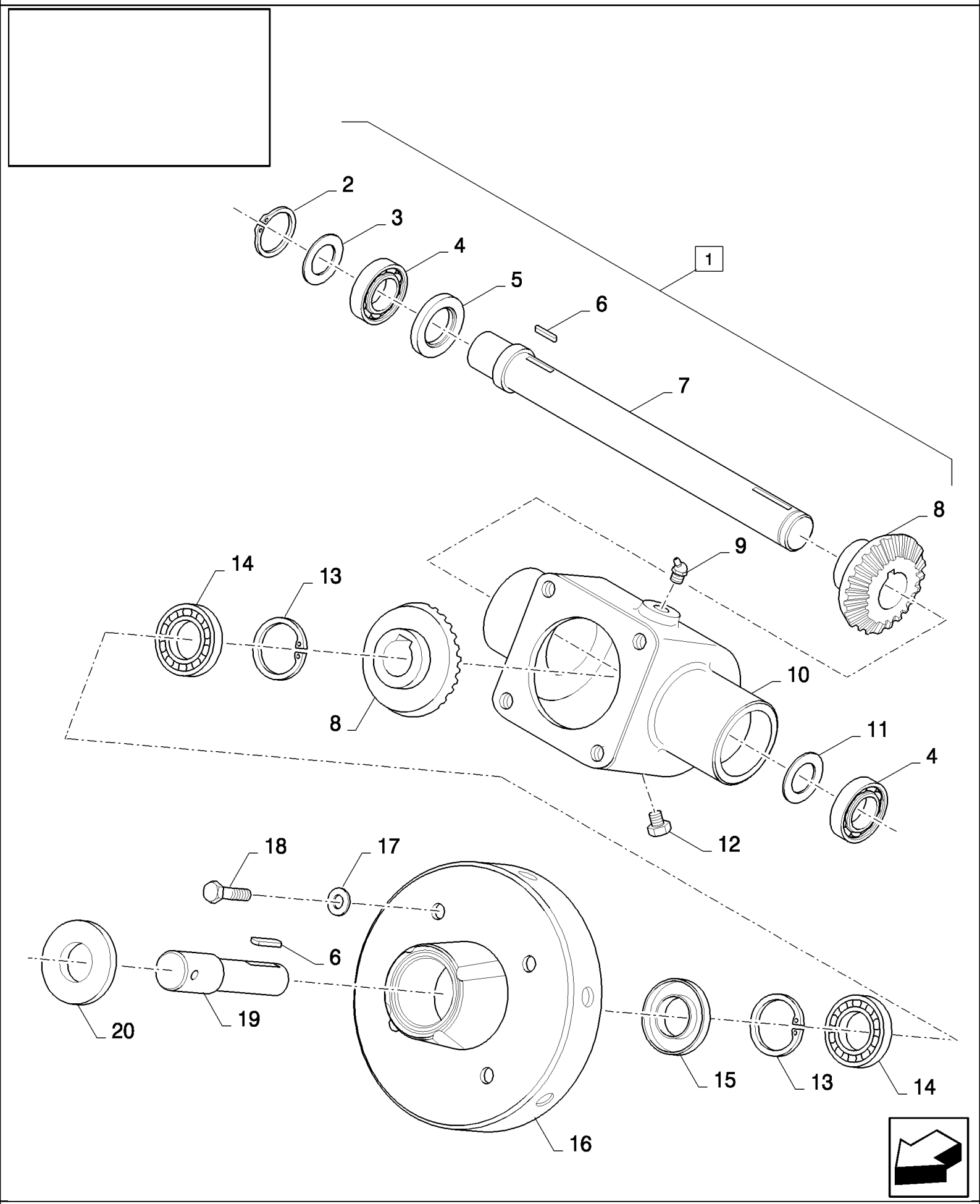

CX880 COMBINE - BASE UNIT (2/01-)

15.13(01) TAILINGS ELEVATORS, GEARBOX

ссылка	Номер детали	Кол-во	Описание
1	84074283	1	GEARBOX, (2 to 20)
2	370011	1	RING, SNAP, M52, Int,
3	376817	2	WASHER,
4	443898	2	BEARING, BALL,
5	447563	1	ELEMENT, SEALING,
6	170030	2	KEY, M8 x 7 x 32, Par,
7	84056680	1	SHAFT,
8	9508218	2	GEAR,
9	80710	1	NIPPLE, LUBE, 1/8"-27 x .66 lg,
10	428711	1	HOUSING,
11	391120	1	ELEMENT, SEALING,
12	86539484	1	PLUG, DRAIN, Sq Hd, 1/8"-27, NTPF,
13	370012	2	RING, SNAP, M62, Int,
14	84100561	2	BEARING ASSY,
15	417722	1	SEAL,
16	84074279	1	HOUSING, BEARING,
17	140045	4	WASHER, SPRING, Belleville, M10,
18	43140	4	BOLT, Hex, M10 x 30, 8.8, Full Thd,
19	84074328	1	SHAFT,
20	84100562	1	PLATE,

15.14(01) TAILINGS ELEVATORS

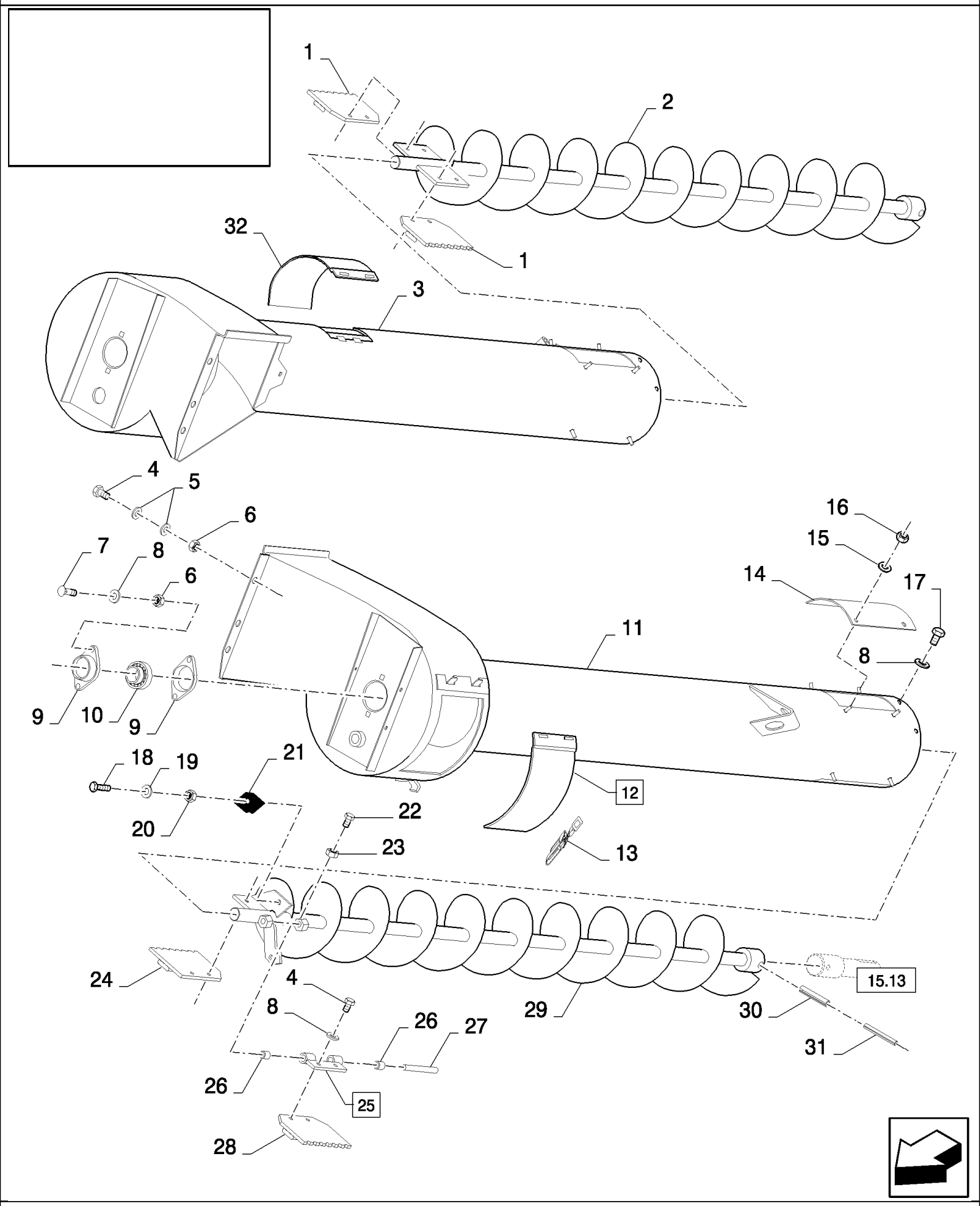

CX880 COMBINE - BASE UNIT (2/01-)

15.14(01) TAILINGS ELEVATORS

ссылка	Номер детали	Кол-во	Описание
1	9837532	2	DEFLECTOR, , STANDARD
1	84000642	2	DEFLECTOR, , REINFORCED
2	84069825	1	AUGER, RH, FOR CX820, CX840, CX860, CX880 ONLY, STANDARD
2	84072285	1	AUGER, RH, FOR CX820, CX840, CX860, CX880 ONLY, REINFORCED
3	84069662	1	ELEVATOR, RH, FOR CX820, CX840, CX860, CX880 ONLY, FOR SELF LEVELLING ONLY
3	84433354	1	HOUSING, GRAIN ELEVATOR, , FOR CX820, CX840, CX860, CX880 ONLY, FOR FIXED SHOE ONLY
4	120104	AR	SCREW, Hex, M8 x 20, 8.8,
5	412650	AR	WASHER, Belleville, M8,
6	89706690	AR	NUT, M8, Cl 8,
7	86507486	4	BOLT, CARRIAGE, Short NK, M8 x 20, Cl8.8, Full Thd,
8	322358	AR	WASHER, SPRING, Belleville, M8,
9	86548974	4	FLANGE, , FOR CX820, CX840, CX860, CX880 ONLY
9	86548974	2	FLANGE, , FOR CX720, CX740, CX760, CX780 ONLY
10	325103	2	BEARING, BALL, , FOR CX820, CX840, CX860, CX880 ONLY
10	325103	1	BEARING, BALL, , FOR CX720, CX740, CX760, CX780 ONLY
11	84069671	1	ELEVATOR, LH
12	84074758	2	COVER, (13), FOR CX820, CX840, CX860, CX880 ONLY
12	84074758	1	COVER, (13), FOR CX720, CX740, CX760, CX780 ONLY
13	84043033	1	CLAMP,
14	84071738	2	COVER, , FOR CX820, CX840, CX860, CX880 ONLY
14	84071738	1	COVER, , FOR CX720, CX740, CX760, CX780 ONLY
15	412649	AR	WASHER, SPRING, Belleville, M6,
16	15896221	AR	NUT, M6, Cl 10,
18	43128	2	BOLT, Hex, M8 x 30, 8.8,
19	378243	4	WASHER, M8,
20	86629542	2	NUT, LOCK, M8 x 1.25, Cl 8,
21	84014122	2	CANVAS,
22	300477	2	SET SCREW, Hex Soc, M8 x 16, Cup Pt, M8x16
23	89706690	2	NUT, M8, Cl 8,
24	9838317	1	DEFLECTOR, , STANDARD
24	9850047	1	DEFLECTOR, , REINFORCED
25	84071740	1	HINGE, (26)
26	89833065	2	SLEEVE,
27	84043035	1	PIN,
28	9838316	1	DEFLECTOR, , STANDARD
28	9850048	1	DEFLECTOR, , REINFORCED
29	84069823	1	AUGER, , STANDARD
29	84072249	1	AUGER, , REINFORCED
30	130054	2	PIN, LOCK, M13 x 55, Slotted,
31	14607570	2	PIN, LOCK, M8 x 55, Slotted,
32	84433313	1	COVER, , FOR CX820, CX840, CX860, CX880 ONLY, FOR SELF LEVELLING ONLY
17	16043224	AR	BOLT, Hex, M8 x 16, 8.8, Full Thd,

15.15(01) TAILINGS ELEVATORS, BOTTOM AUGER

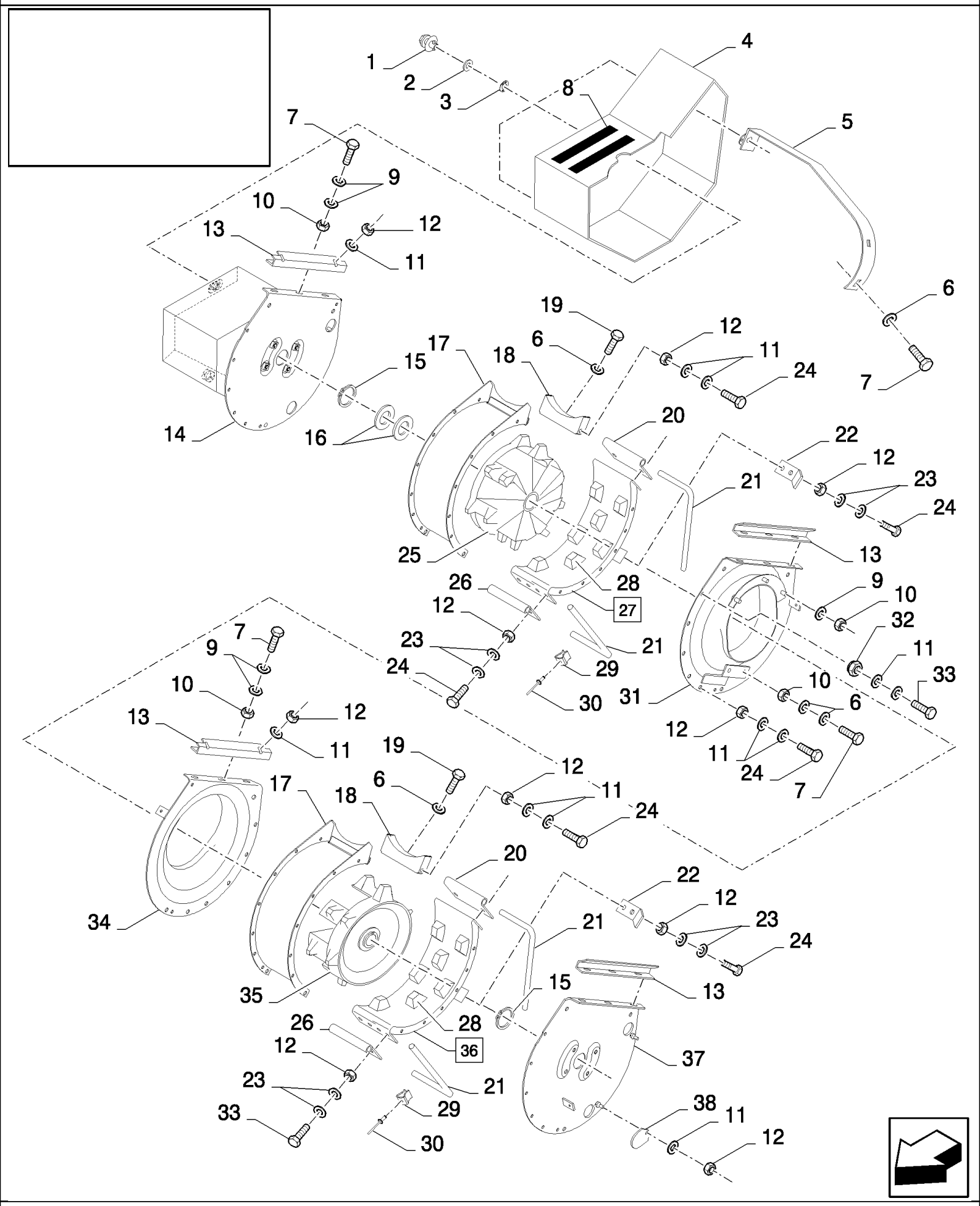

CX880 COMBINE - BASE UNIT (2/01-)

15.15(01) TAILINGS ELEVATORS, BOTTOM AUGER

ссылка	Номер детали	Кол-во	Описание
1	89514603	3	LOCK,
2	140069	4	WASHER,
3	9514605	3	WASHER,
4	84073117	1	SHIELD,
5	84434650	1	SUPPORT,
6	322358	10	WASHER, SPRING, Belleville, M8,
7	120104	8	SCREW, Hex, M8 x 20, 8.8,
8	401502	AR	STRIP, ANTI-SKID, 51mm x 18.3 Roll - Cut to Size
9	412650	14	WASHER, Belleville, M8,
10	89706690	14	NUT, M8, Cl 8,
11	322357	AR	WASHER, SPRING, Belleville, M6,
12	15896221	AR	NUT, M6, Cl 10,
13	84071749	4	SUPPORT,
14	84072823	1	PLATE,
15	11068376	2	RING, SNAP, M35, Ext x 1.5 Thk,
16	58630	3	SHIM, .0299" Thk, 0.8MM
16	444099	3	PLATE, ADJUSTING, 3MM
17	84071980	2	COVER, , STANDARD
17	84072586	2	COVER, , REINFORCED
18	84071739	2	SUPPORT,
20	428700	2	PLATE, ADJUSTING,
21	84038089	4	PIN,
22	455652	4	BRACKET,
23	412649	AR	WASHER, SPRING, Belleville, M6,
24	86508568	AR	SCREW, Hex, M6 x 16, 8.8,
25	84607287	1	AWNER, RH, STANDARD
25	84607289	1	AWNER, RH, REINFORCED
26	747606	2	PLATE, ADJUSTING,
27	84074726	1	COVER, (28)
27	84074826	1	COVER, , SMOOTH VERSION
28	421866	AR	PIN, RH
29	323307	4	CLAMP,
30	445394	4	RIVET, Pop, M4.8 x 12.7,
31	84071805	1	PLATE, RH
32	412152	2	NUT, LOCK, M6 x 1, Cl 8.8,
33	120100	AR	BOLT, Hex, M6 x 20, 8.8,
34	84071806	1	PLATE, LH
35	84607291	1	AWNER, LH, STANDARD
35	84607293	1	AWNER, LH, REINFORCED
36	84074727	1	COVER, (28)
36	84074826	1	COVER, , SMOOTH VERSION
37	84069746	1	COVER,
38	456468	4	PLATE, , STANDARD
38	84023284	4	COVER, , REINFORCED

ссылка	Номер детали	Кол-во	Описание
19	16043224	2	BOLT, Hex, M8 x 16, 8.8, Full Thd,

15.17(01) GRAIN PAN

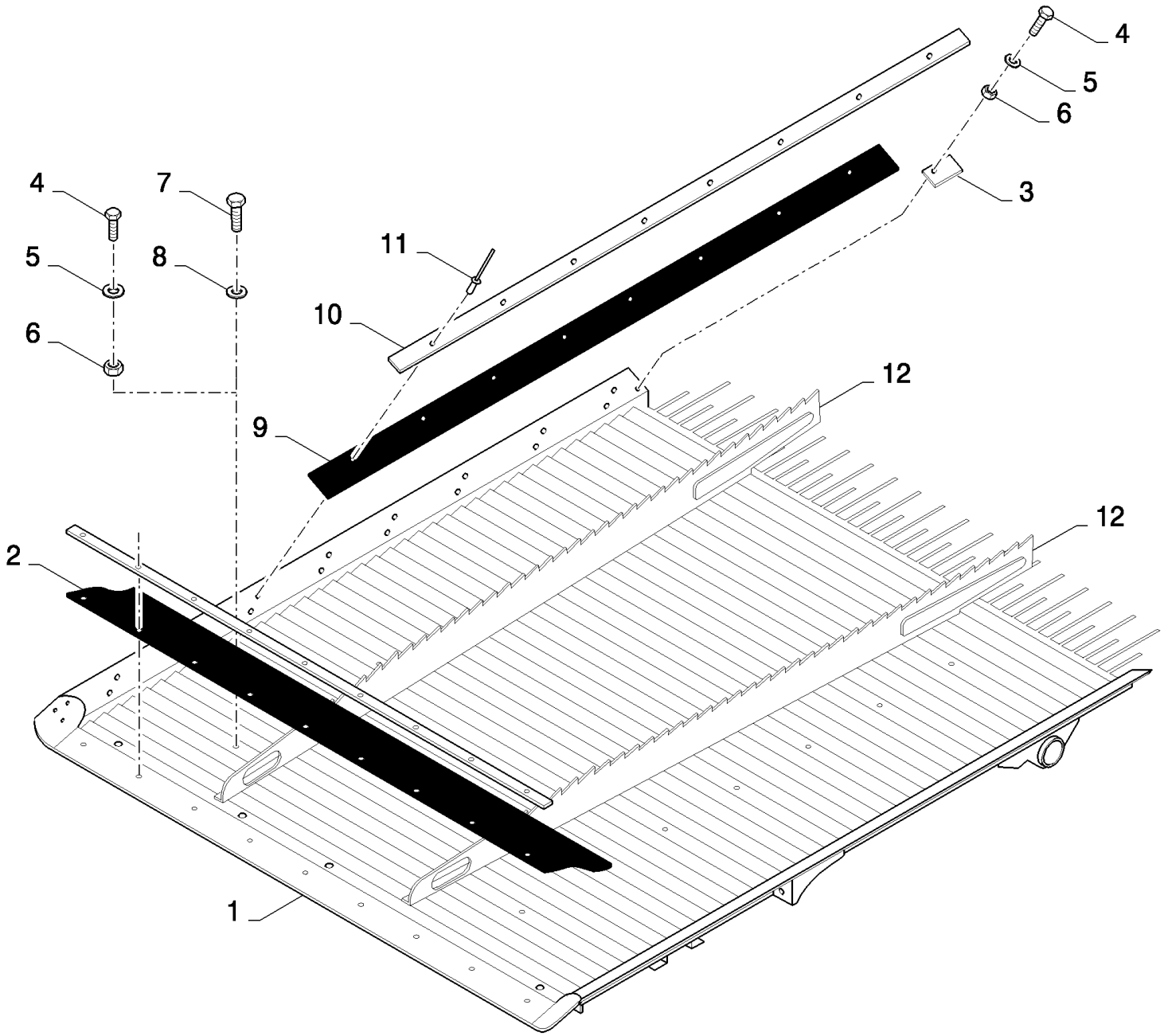

CX880 COMBINE - BASE UNIT (2/01-)

15.17(01) GRAIN PAN

ссылка	Номер детали	Кол-во	Описание
1	84073440	1	SHOE, SHAKER, , FOR CX820, CX840, CX860, CX880 ONLY
1	84439867	1	SHOE, SHAKER, , FOR CX720, CX740, CX760, CX780 ONLY
2	84073949	1	CANVAS, , FOR CX820, CX840, CX860, CX880 ONLY
2	84439955	1	CANVAS, , FOR CX720, CX740, CX760, CX780 ONLY
3	429635	2	SUPPORT,
4	86508568	AR	SCREW, Hex, M6 x 16, 8.8,
5	322357	AR	WASHER, SPRING, Belleville, M6,
6	15896221	AR	NUT, M6, Cl 10,
8	322358	12	WASHER, SPRING, Belleville, M8, , BSN C245
9	84437878	2	CANVAS,
10	84437877	2	PLATE, FIXING,
11	80445395	16	RIVET,
12	84073919	AR	DIVIDER,
7	16043224	12	BOLT, Hex, M8 x 16, 8.8, Full Thd, , BSN C245

15.18(01) GRAIN PAN, REMOVABLE

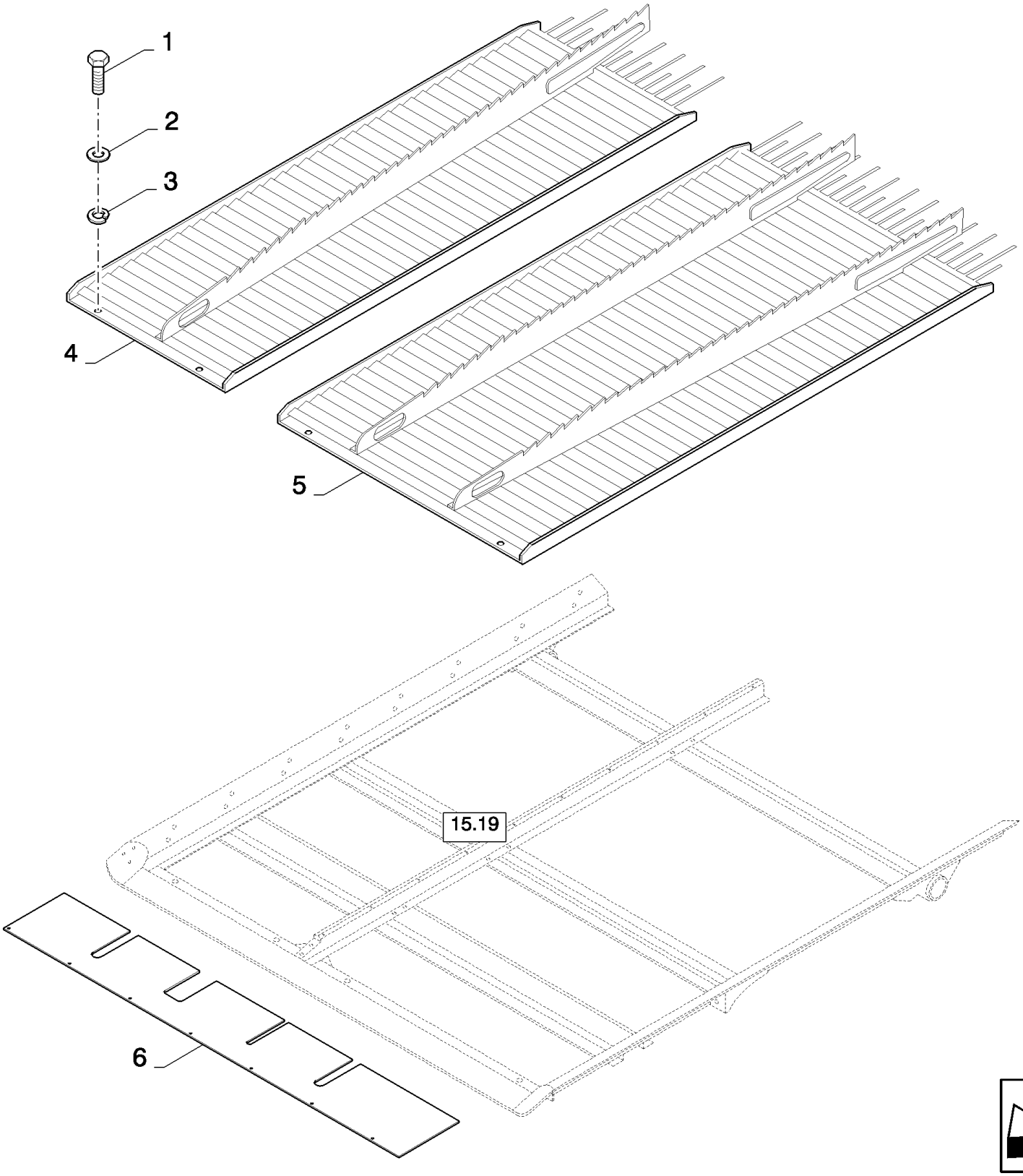

CX880 COMBINE - BASE UNIT (2/01-)

15.18(01) GRAIN PAN, REMOVABLE

ссылка	Номер детали	Кол-во	Описание
1	9706687	4	SCREW, Hex, M12 x 30, 8.8,
2	140046	4	WASHER, Belleville, M12,
3	378245	4	WASHER, M12,
4	84069764	1	GRAIN PAN, RH, FOR SELF LEVELLING ONLY, FOR CX820, CX840, CX860, CX880 ONLY
4	84073766	1	GRAIN PAN, RH, FOR CX820, CX840, CX860, CX880 ONLY, FOR FIXED SHOE ONLY
4	84075444	1	GRAIN PAN, RH, FOR CX720, CX740, CX760, CX780 ONLY
5	84069764	1	GRAIN PAN, LH, FOR CX820, CX840, CX860, CX880 ONLY, FOR SELF LEVELLING ONLY
5	84075318	1	GRAIN PAN, LH, FOR CX820, CX840, CX860, CX880 ONLY, FOR FIXED SHOE ONLY
5	84075707	1	GRAIN PAN, LH, FOR CX720, CX740, CX760, CX780 ONLY
6	87391542	1	CANVAS, , FOR CX720, CX740, CX760, CX780 ONLY
6	87388702	1	CANVAS, , FOR FIXED SHOE ONLY, FOR CX820, CX840, CX860, CX880 ONLY
6	87384762	1	CANVAS, , FOR CX820, CX840, CX860, CX880 ONLY, FOR SELF LEVELLING ONLY

15.19(01) GRAIN PAN, REMOVABLE - FRAME

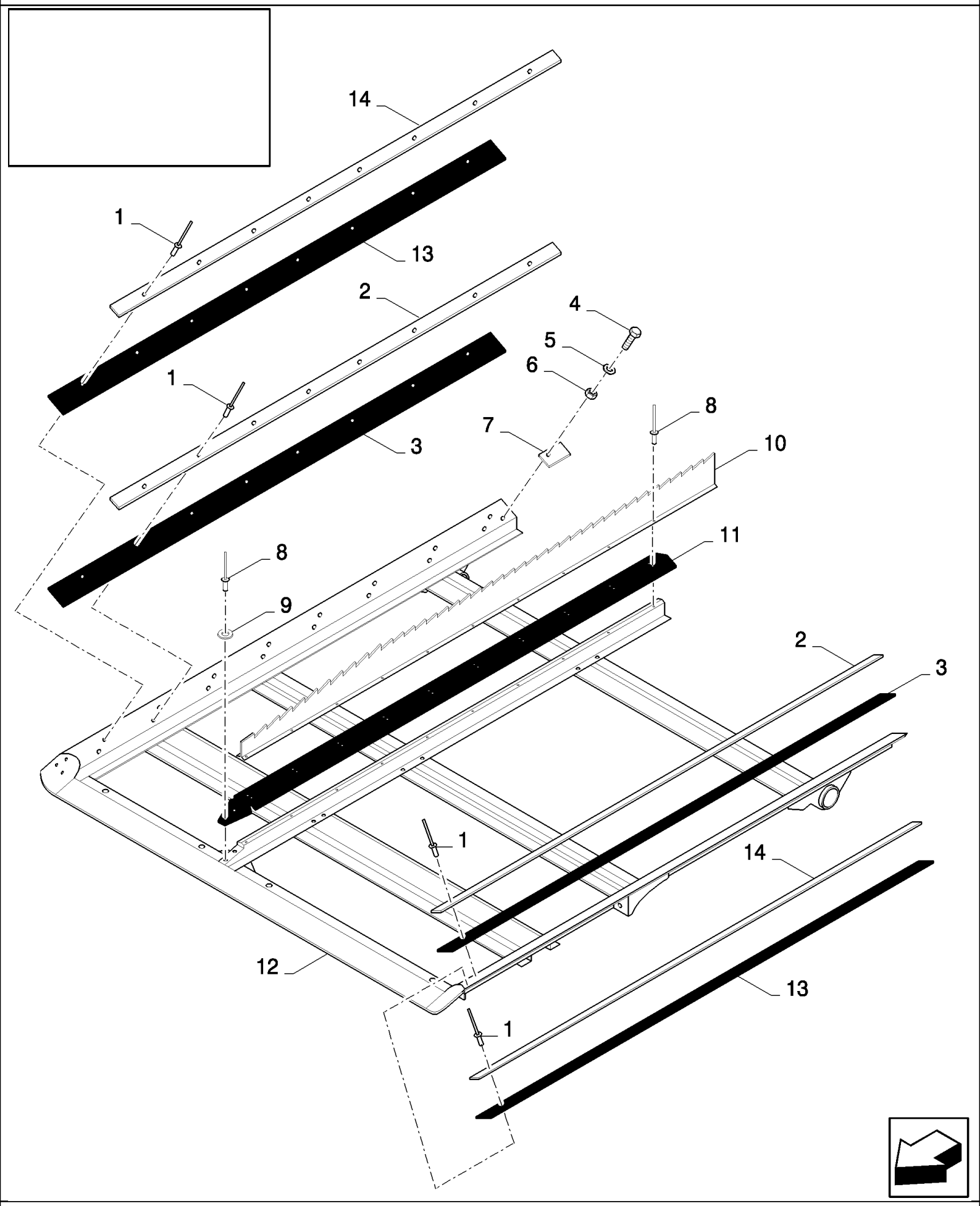

CX880 COMBINE - BASE UNIT (2/01-)

15.19(01) GRAIN PAN, REMOVABLE - FRAME

ссылка	Номер детали	Кол-во	Описание
1	80445395	32	RIVET,
2	435587	2	PLATE, FIXING,
3	84061787	2	CANVAS,
4	86508568	2	SCREW, Hex, M6 x 16, 8.8,
5	140015	2	WASHER, 6MM
6	353308	2	NUT, M6 x 1, Cl 8,
7	84069569	2	PLATE,
8	445394	17	RIVET, Pop, M4.8 x 12.7,
9	140182	2	WASHER, M5 x 18 x 2,
10	84069653	1	DIVIDER,
11	84061791	1	CANVAS,
12	84069661	1	SHOE, SHAKER, , FOR CX820, CX840, CX860, CX880 ONLY
12	84073568	1	SHOE, SHAKER, , FOR CX720, CX740, CX760, CX780 ONLY
13	84061822	2	CANVAS, , BSN C245
13	84437878	2	CANVAS, , ASN D246
14	84073975	2	PLATE, FIXING, , BSN C245
14	84437877	2	PLATE, FIXING, , ASN D246

15.20(01) UPPER SIEVES

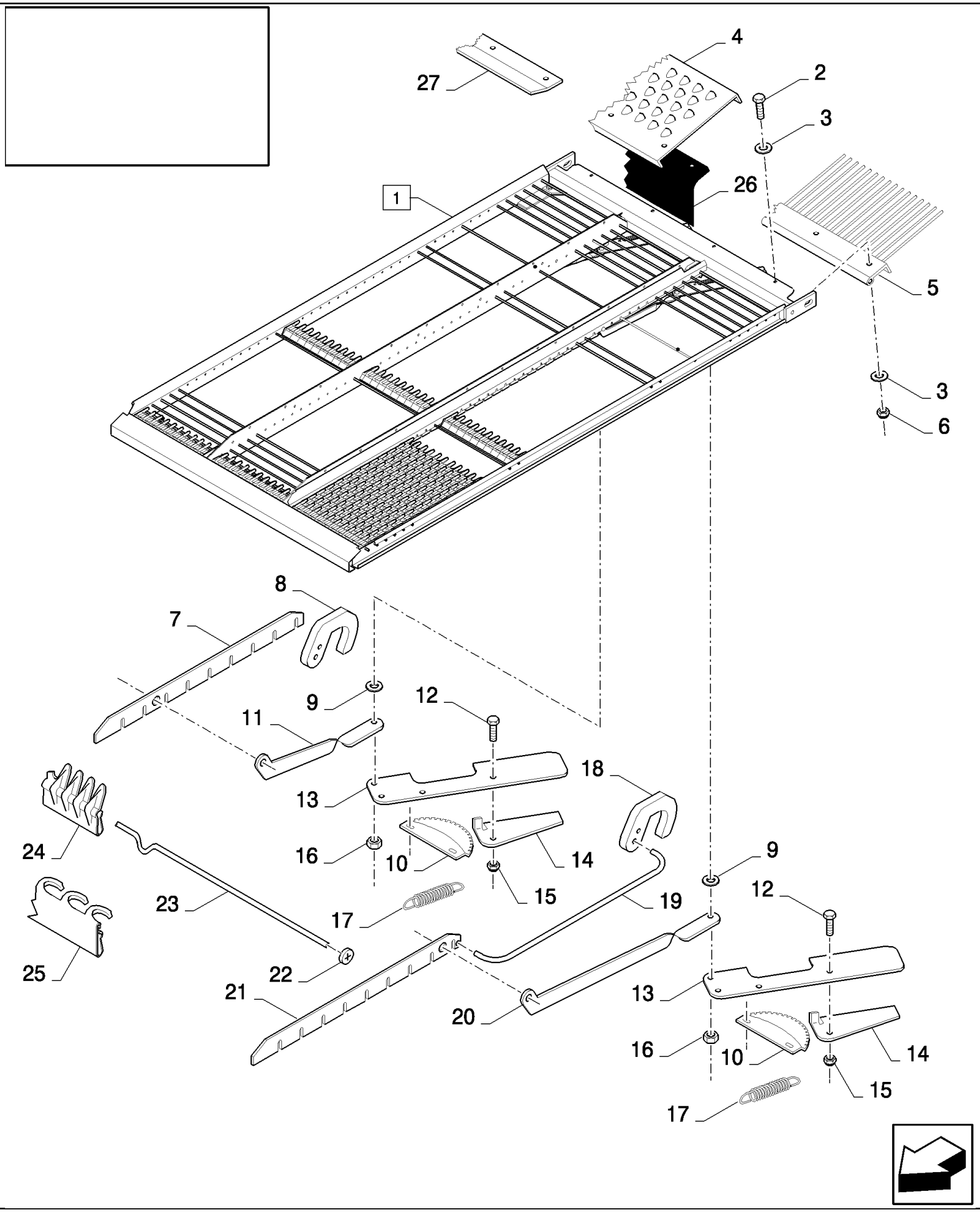

CX880 COMBINE - BASE UNIT (2/01-)

15.20(01) UPPER SIEVES

ссылка	Номер детали	Кол-во	Описание
1	87109838	2	SIEVE, CLOSZ 15/8" (7 to 24), FOR CX820, CX840, CX860, CX880 ONLY
1	87109836	1	SIEVE, CLOSZ 15/8" (7 to 24), FOR CX720, CX740, CX760, CX780 ONLY
1	84100965	2	SIEVE, HC 1 1/8"(7 to 24), FOR CX820, CX840, CX860, CX880 ONLY
1	84100966	1	SIEVE, HC 1 1/8"(7 to 24), FOR CX720, CX740, CX760, CX780 ONLY
1	84320037	2	SIEVE, HC 1 5/8"(7 to 17, 22 to 24), FOR CX820, CX840, CX860, CX880 ONLY
1	84454521	2	SIEVE, GRAIN, HC 1 5/8"(7 to 17, 22 to 24), CURVED, FOR CX820, CX840, CX860, CX880 ONLY, STAINLESS STEEL
1	84320038	1	SIEVE, HC 1 5/8"(7 to 17, 22 to 24), FOR CX720, CX740, CX760, CX780 ONLY
1	84454512	1	SIEVE, GRAIN, HC 1 5/8"(7 to 17, 22 to 24), CURVED, FOR CX720, CX740, CX760, CX780 ONLY, STAINLESS STEEL
1	84100990	2	SIEVE, PET 1 1/8"(7 to 24), FOR CX820, CX840, CX860, CX880 ONLY
1	84100991	1	SIEVE, PET 1 1/8"(7 to 24), FOR CX720, CX740, CX760, CX780 ONLY
2	120100	AR	BOLT, Hex, M6 x 20, 8.8,
2	86508568	AR	SCREW, Hex, M6 x 16, 8.8,
3	412653	AR	WASHER, SPRING, Belleville, M6,
4	453266	2	SIEVE EXTENSION, , FOR CX820, CX840, CX860, CX880 ONLY
4	430384	1	SIEVE EXTENSION, , FOR CX720, CX740, CX760, CX780 ONLY
5	84100961	2	RAKE, , FOR CX820, CX840, CX860, CX880 ONLY
5	84100963	1	RAKE, , FOR CX720, CX740, CX760, CX780 ONLY
6	15896221	AR	NUT, M6, Cl 10,
7	84056237	1	PLATE, ADJUSTING, , FOR 1 1/8" SIEVE ONLY
7	84056235	1	PLATE, ADJUSTING, , FOR 1 5/8" SIEVE ONLY
7	87280032	1	HANDLE, , FOR CLOSZ ONLY
8	84056254	1	INDICATOR, , FOR 1 1/8" SIEVE ONLY
8	84056253	1	INDICATOR, , FOR 1 5/8" SIEVE ONLY
9	378243	2	WASHER, M8,
10	426565	2	QUADRANT,
11	84053320	1	LEVER, , FOR 1 1/8" SIEVE ONLY
11	84056678	1	LEVER, , FOR 1 5/8" SIEVE ONLY
11	87280884	1	HANDLE, , FOR CLOSZ ONLY
12	86508568	2	SCREW, Hex, M6 x 16, 8.8,
13	9817781	2	HANDLE,
13	87109910	2	HANDLE, , FOR CLOSZ ONLY
14	432187	2	HANDLE,
15	353308	2	NUT, M6 x 1, Cl 8,
16	86629542	2	NUT, LOCK, M8 x 1.25, Cl 8,
17	449942	2	SPRING,
18	84056802	1	INDICATOR, , FOR 1 1/8" SIEVE ONLY
18	84437355	1	INDICATOR, , FOR CLOSZ ONLY
19	84056247	1	ROD, , FOR 1 1/8" SIEVE ONLY
19	84437412	1	WIRE, RETAINING, , FOR CLOSZ ONLY
20	84053321	1	LEVER, , FOR 1 1/8" SIEVE ONLY
20	87280882	1	HANDLE, , FOR CLOSZ ONLY
21	84056236	1	PLATE, ADJUSTING, , FOR 1 1/8" SIEVE ONLY

CX880 COMBINE - BASE UNIT (2/01-)

15.20(01) UPPER SIEVES

ссылка	Номер детали	Кол-во	Описание
21	87280031	1	HANDLE, , FOR CLOSZ ONLY
22	398561	6	CLIP,
23	453189	AR	WIRE, RETAINING, , FOR CX820, CX840, CX860, CX880 ONLY
23	428728	AR	WIRE, RETAINING, , FOR CX720, CX740, CX760, CX780 ONLY
24	445569	47	BAR, HC 1 1/8"-240, FOR CX820, CX840, CX860, CX880 ONLY
24	324715	94	BAR, HC 1 1/8"-230, FOR CX820, CX840, CX860, CX880 ONLY
24	445569	235	BAR, HC 1 1/8"-240, FOR CX720, CX740, CX760, CX780 ONLY
24	80445568	33	BAR, HC 1 5/8"-240, FOR CX820, CX840, CX860, CX880 ONLY
24	80396505	66	BAR, HC 1 5/8"-230, FOR CX820, CX840, CX860, CX880 ONLY
24	80445568	165	BAR, HC 1 5/8"-240, FOR CX720, CX740, CX760, CX780 ONLY
24	84444363	33	BAR, HC 1 5/8"-240, FOR CX820, CX840, CX860, CX880 ONLY, STAINLESS STEEL
24	84444365	66	BAR, HC 1 5/8"-230, STAINLESS STEEL, FOR CX820, CX840, CX860, CX880 ONLY
24	84444363	165	BAR, HC 1 5/8"-240, FOR CX720, CX740, CX760, CX780 ONLY, STAINLESS STEEL
24	87109905	66	, FOR CLOSZ ONLY, FOR CX820, CX840, CX860, CX880 ONLY
24	87109906	33	SLAT, , FOR CX820, CX840, CX860, CX880 ONLY, FOR CLOSZ ONLY
24	87109906	33	SLAT, , FOR CLOSZ ONLY, FOR CX720, CX740, CX760, CX780 ONLY
24	87281089	132	SLAT, , FOR CX720, CX740, CX760, CX780 ONLY, FOR CLOSZ ONLY
25	89832566	47	BAR, PET 1 1/8"-240, FOR CX820, CX840, CX860, CX880 ONLY
25	89832565	94	BAR, PET 1 1/8"-230, FOR CX820, CX840, CX860, CX880 ONLY
25	89832566	235	BAR, PET 1 1/8"-240, FOR CX720, CX740, CX760, CX780 ONLY
26	84320875	1	SEAL, , FOR CX820, CX840, CX860, CX880 ONLY, FOR 1 5/8" SIEVE ONLY
26	743083	1	CANVAS, , FOR 1 1/8" SIEVE ONLY, FOR CX820, CX840, CX860, CX880 ONLY
26	84446197	1	CANVAS, , FOR CX720, CX740, CX760, CX780 ONLY, FOR 1 5/8" SIEVE ONLY
26	743082	1	CANVAS, , FOR 1 1/8" SIEVE ONLY, FOR CX720, CX740, CX760, CX780 ONLY
27	84100993	2	PLATE, , FOR CX820, CX840, CX860, CX880 ONLY
27	84100992	1	PLATE, , FOR CX720, CX740, CX760, CX780 ONLY

15.21(01) REMOTE UPPER SIEVE ADJUSTMENT

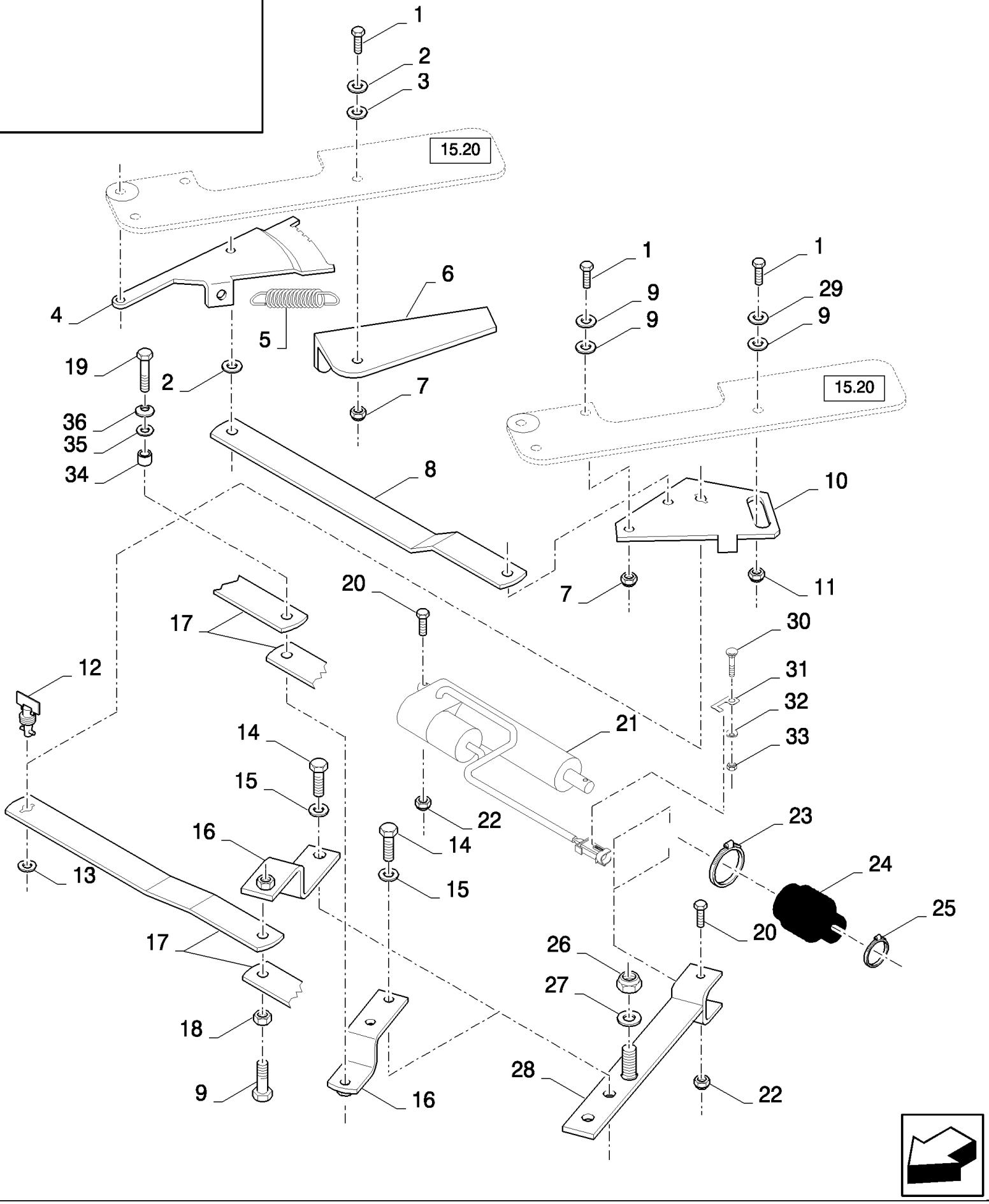

CX880 COMBINE - BASE UNIT (2/01-)

15.21(01) REMOTE UPPER SIEVE ADJUSTMENT

ссылка	Номер детали	Кол-во	Описание
1	120100	3	BOLT, Hex, M6 x 20, 8.8,
2	140015	8	WASHER, 6MM
3	140040	2	WASHER, M6 x 22 x 2,
4	84053678	2	SECTOR, TOOTHED, , FOR 1 1/8" SIEVE ONLY
5	449942	2	SPRING, , FOR 1 1/8" SIEVE ONLY
6	84053675	2	PLATE, , FOR 1 1/8" SIEVE ONLY
7	353308	4	NUT, M6 x 1, Cl 8,
8	84053679	2	BRACKET, , FOR 1 1/8" SIEVE ONLY
9	412649	6	WASHER, SPRING, Belleville, M6,
10	84053677	1	PLATE, RH Sieve, FOR CX820, CX840, CX860, CX880 ONLY
10	84062611	1	PLATE, LH Sieve, FOR CX820, CX840, CX860, CX880 ONLY
10	84053677	1	PLATE, , FOR CX720, CX740, CX760, CX780 ONLY
11	15896221	2	NUT, M6, Cl 10,
12	9831581	2	LOCK,
13	9514605	2	WASHER,
14	120104	2	SCREW, Hex, M8 x 20, 8.8,
15	322358	2	WASHER, SPRING, Belleville, M8,
16	84053313	1	BRACKET,
17	84053322	2	PLATE, , BSN C415
17	84457472	2	PLATE, , ASN D416
18	89706690	1	NUT, M8, Cl 8, , BSN C415
19	43128	1	BOLT, Hex, M8 x 30, 8.8,
20	87716	2	BOLT, Hex, 1/4"-20 x 1 1/4", G5,
21	84053684	1	ACTUATOR, , BSN C511
21	87347281	1	ACTUATOR, , ASN D512
22	280129	2	NUT, LOCK, 1/4"-20, GC,
23	382527	1	CLAMP, HOSE,
24	84053431	1	BELLOWS,
25	326082	1	CLAMP,
26	100037	1	NUT, M10 x 1.5, Cl 8,
27	378244	1	WASHER, M10,
28	84053315	1	LEVER,
29	322357	2	WASHER, SPRING, Belleville, M6,
30	86619060	1	BOLT, CARRIAGE, Short NK, M8 x 16, Cl8.8, Full Thd,
31	87013667	1	CLIP,
32	322358	1	WASHER, SPRING, Belleville, M8,
33	89706690	1	NUT, M8, Cl 8,
34	428329	1	RING, , ASN D416
35	378243	1	WASHER, M8, , ASN D416
36	322358	1	WASHER, SPRING, Belleville, M8, , ASN D416

15.22(01) LOWER SIEVES

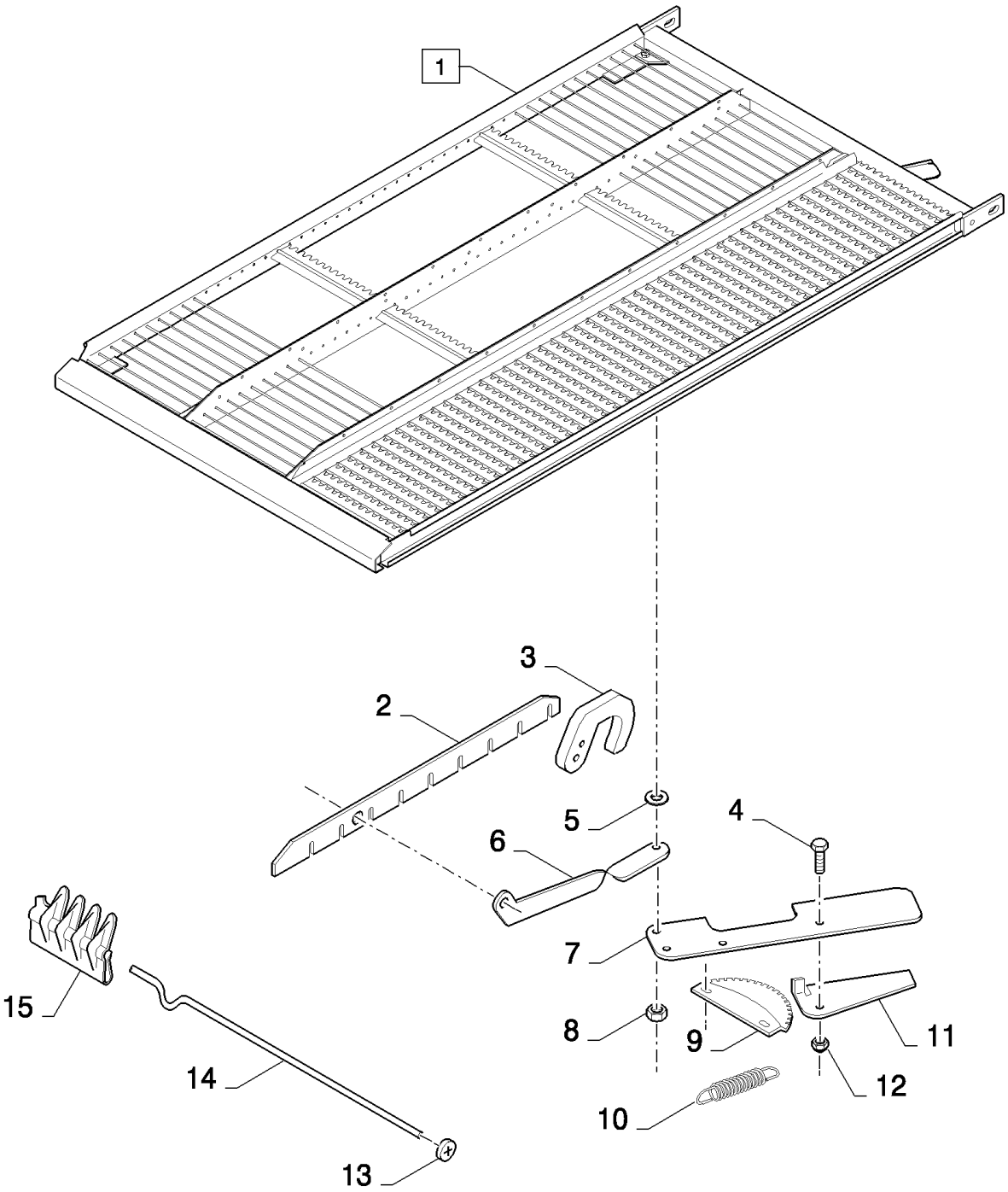

CX880 COMBINE - BASE UNIT (2/01-)

15.22(01) LOWER SIEVES

ссылка	Номер детали	Кол-во	Описание
1	84320021	2	SIEVE, CL 1 1/8"(3 to 15), FOR CX820, CX840, CX860, CX880 ONLY
1	84320022	1	SIEVE, CL 1 1/8"(3 to 15), FOR CX720, CX740, CX760, CX780 ONLY
2	84056239	1	PLATE, ADJUSTING,
3	84056254	1	INDICATOR,
4	86508568	1	SCREW, Hex, M6 x 16, 8.8,
5	378243	1	WASHER, M8,
6	84056678	1	LEVER,
7	9817781	1	HANDLE,
8	86629542	1	NUT, LOCK, M8 x 1.25, Cl 8,
9	426565	1	QUADRANT,
10	449942	1	SPRING,
11	432187	1	HANDLE,
12	353308	1	NUT, M6 x 1, Cl 8,
13	398561	AR	CLIP,
14	453189	47	WIRE, RETAINING, , FOR CX820, CX840, CX860, CX880 ONLY
14	428728	47	WIRE, RETAINING, , FOR CX720, CX740, CX760, CX780 ONLY
15	445571	47	BAR, CL 1 1/8"-240, FOR CX820, CX840, CX860, CX880 ONLY
15	481730	94	BAR, CL 1 1/8"-230, FOR CX820, CX840, CX860, CX880 ONLY
15	445571	235	BAR, CL 1 1/8"-240, FOR CX720, CX740, CX760, CX780 ONLY

15.23(01) REMOTE LOWER SIEVE ADJUSTMENT

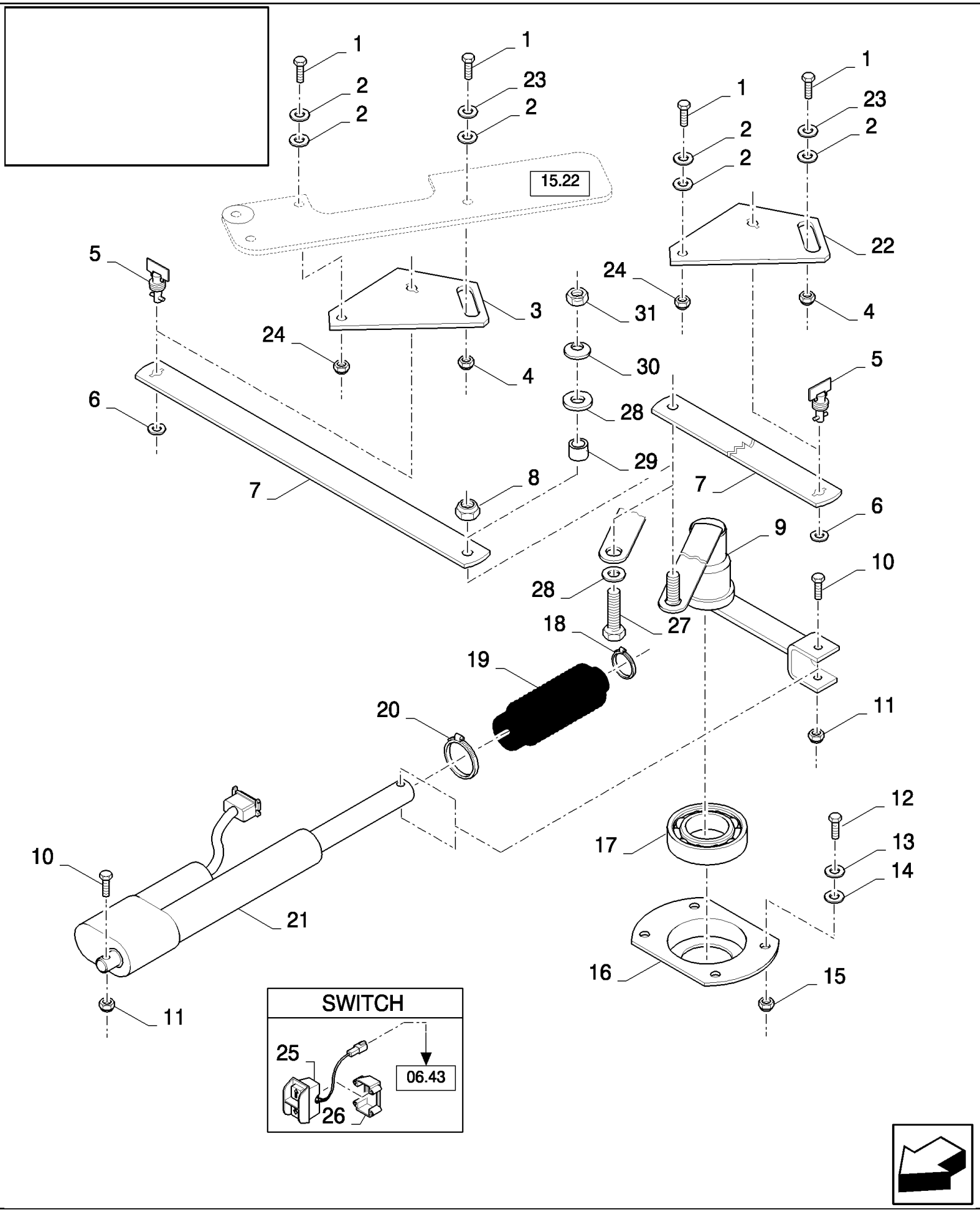

CX880 COMBINE - BASE UNIT (2/01-)

15.23(01) REMOTE LOWER SIEVE ADJUSTMENT

ссылка	Номер детали	Кол-во	Описание
1	120100	2	BOLT, Hex, M6 x 20, 8.8, , FOR CX720, CX740, CX760, CX780 ONLY
1	120100	4	BOLT, Hex, M6 x 20, 8.8, , FOR CX820, CX840, CX860, CX880 ONLY
2	412649	3	WASHER, SPRING, Belleville, M6, , FOR CX720, CX740, CX760, CX780 ONLY
2	412649	6	WASHER, SPRING, Belleville, M6, , FOR CX820, CX840, CX860, CX880 ONLY
3	84053677	1	PLATE,
4	15896221	1	NUT, M6, Cl 10, , FOR CX720, CX740, CX760, CX780 ONLY
4	15896221	2	NUT, M6, Cl 10, , FOR CX820, CX840, CX860, CX880 ONLY
5	9831581	1	LOCK, , FOR CX720, CX740, CX760, CX780 ONLY
5	9831581	2	LOCK, , FOR CX820, CX840, CX860, CX880 ONLY
6	9514605	1	WASHER, , FOR CX720, CX740, CX760, CX780 ONLY
6	9514605	2	WASHER, , FOR CX820, CX840, CX860, CX880 ONLY
7	84057731	1	LEVER, , FOR CX720, CX740, CX760, CX780 ONLY, BSN C415
7	84457469	1	PLATE, , FOR CX720, CX740, CX760, CX780 ONLY, ASN D416
7	84053318	2	PLATE, , FOR CX820, CX840, CX860, CX880 ONLY, BSN C415
7	84457469	2	PLATE, , FOR CX820, CX840, CX860, CX880 ONLY, ASN D416
8	86629542	1	NUT, LOCK, M8 x 1.25, Cl 8,
9	84064561	1	ARM, , BSN C415
9	87011804	1	LEVER, , ASN D416
10	87716	2	BOLT, Hex, 1/4"-20 x 1 1/4", G5,
11	280129	2	NUT, LOCK, 1/4"-20, GC,
12	16043224	4	BOLT, Hex, M8 x 16, 8.8, Full Thd,
13	378243	4	WASHER, M8,
14	322358	4	WASHER, SPRING, Belleville, M8,
15	89706690	4	NUT, M8, Cl 8,
16	310045	1	FLANGE,
17	443898	1	BEARING, BALL,
18	326082	1	CLAMP,
19	84053431	1	BELLOWS,
20	382527	1	CLAMP, HOSE,
21	84053684	1	ACTUATOR, , BSN C511
21	87347281	1	ACTUATOR, , ASN D512
22	84062611	1	PLATE, , FOR CX820, CX840, CX860, CX880 ONLY
23	322357	2	WASHER, SPRING, Belleville, M6, , FOR CX820, CX840, CX860, CX880 ONLY
23	322357	1	WASHER, SPRING, Belleville, M6, , FOR CX720, CX740, CX760, CX780 ONLY
24	353308	2	NUT, M6 x 1, Cl 8, , FOR CX820, CX840, CX860, CX880 ONLY
24	353308	1	NUT, M6 x 1, Cl 8, , FOR CX720, CX740, CX760, CX780 ONLY
25	86627351	1	SWITCH,
26	86627352	1	CLAMP,
27	43128	1	BOLT, Hex, M8 x 30, 8.8, , ASN D416
28	378243	2	WASHER, M8, , ASN D416
29	428329	1	RING, H=9.5MM, ASN D416
29	84457465	1	BUSHING, H=5MM, ASN D416
30	322358	1	WASHER, SPRING, Belleville, M8, , ASN D416
31	89706690	1	NUT, M8, Cl 8, , ASN D416

15.24(01) FRONT SIEVES

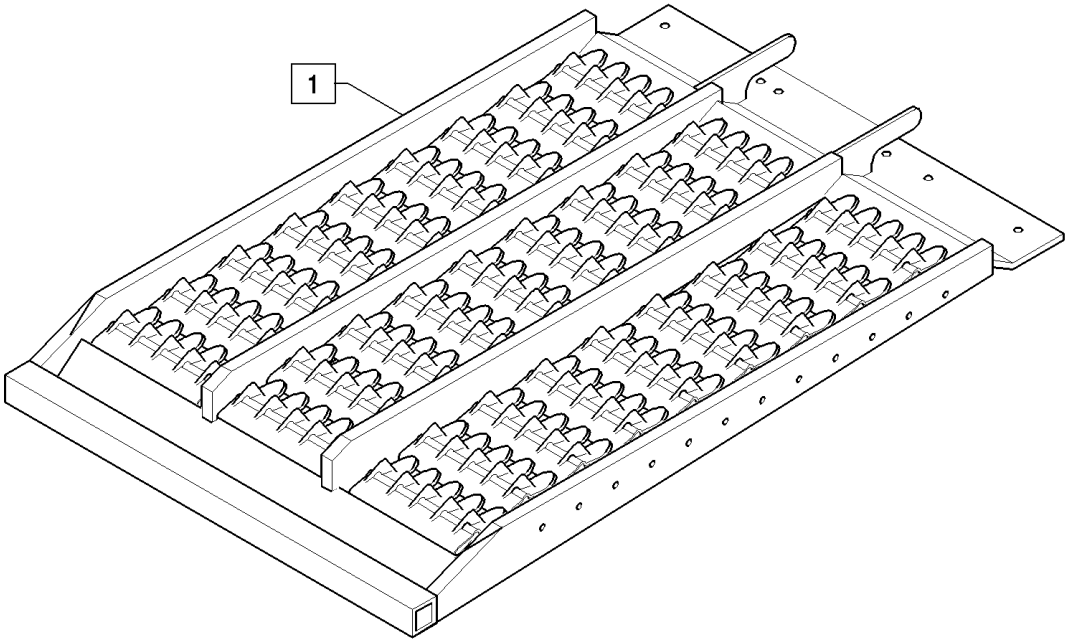

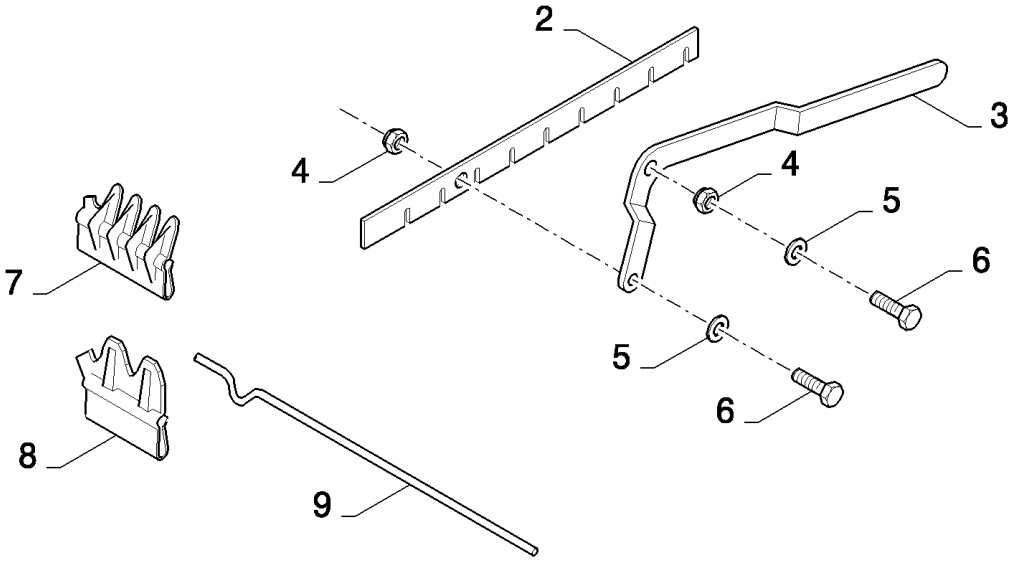

CX880 COMBINE - BASE UNIT (2/01-)

15.24(01) FRONT SIEVES

ссылка	Номер детали	Кол-во	Описание
1	84432256	1	SIEVE, HC 1 5/8"(2 to 8), FOR CX720, CX740, CX760, CX780 ONLY
1	84432132	1	SIEVE, HC 1 5/8"(2 to 8), FOR CX820, CX840, CX860, CX880 ONLY
1	84077046	1	SIEVE, CL 1 1/8"(2 to 7,9), FOR CX720, CX740, CX760, CX780 ONLY
1	84076561	1	SIEVE, CL 1 1/8"(2 to 7,9), FOR CX820, CX840, CX860, CX880 ONLY
2	84077776	1	PLATE, ADJUSTING, , FOR 1 5/8" SIEVE ONLY
2	84434704	1	PLATE, , FOR 1 1/8" SIEVE ONLY
3	84434245	1	LEVER,
4	353308	2	NUT, M6 x 1, Cl 8,
5	140015	2	WASHER, 6MM
6	86508568	2	SCREW, Hex, M6 x 16, 8.8,
7	80445568	AR	BAR, L=240MM
7	80396505	AR	BAR, L=230MM
8	481730	AR	BAR, L=230MM
8	445571	AR	BAR, L=240MM
9	428728	AR	WIRE, RETAINING, , FOR CX720, CX740, CX760, CX780 ONLY
9	452791	AR	WIRE, RETAINING, , FOR CX820, CX840, CX860, CX880 ONLY

15.25(01) INTERCHANGEABLE LOWER SIEVE, FRAME, BLANK-D=16MM,D=18MM

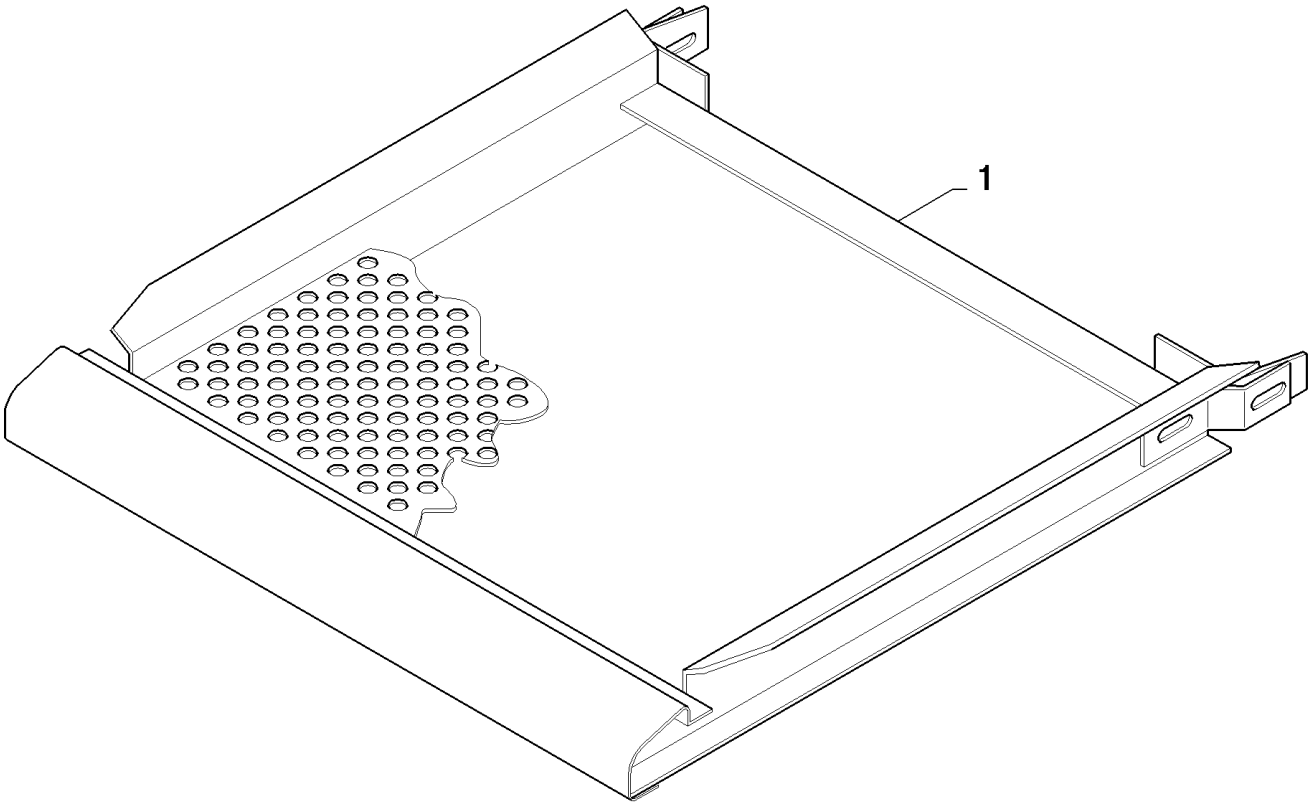

CX880 COMBINE - BASE UNIT (2/01-)

15.25(01) INTERCHANGEABLE LOWER SIEVE, FRAME, BLANK-D=16MM,D=18MM

ссылка	Номер детали	Кол-во	Описание
1	740819	2	FRAME, Blank, FOR CX820, CX840, CX860, CX880 ONLY
1	740778	1	FRAME, Blank, FOR CX720, CX740, CX760, CX780 ONLY
1	9500737	2	SIEVE, D=16MM, FOR CX820, CX840, CX860, CX880 ONLY
1	9500735	1	SIEVE, D=16MM, FOR CX720, CX740, CX760, CX780 ONLY
1	9500738	2	SIEVE, D=18MM, FOR CX820, CX840, CX860, CX880 ONLY
1	9500736	1	SIEVE, D=18MM, FOR CX720, CX740, CX760, CX780 ONLY

15.26(01) EXTENDED DIVIDERS

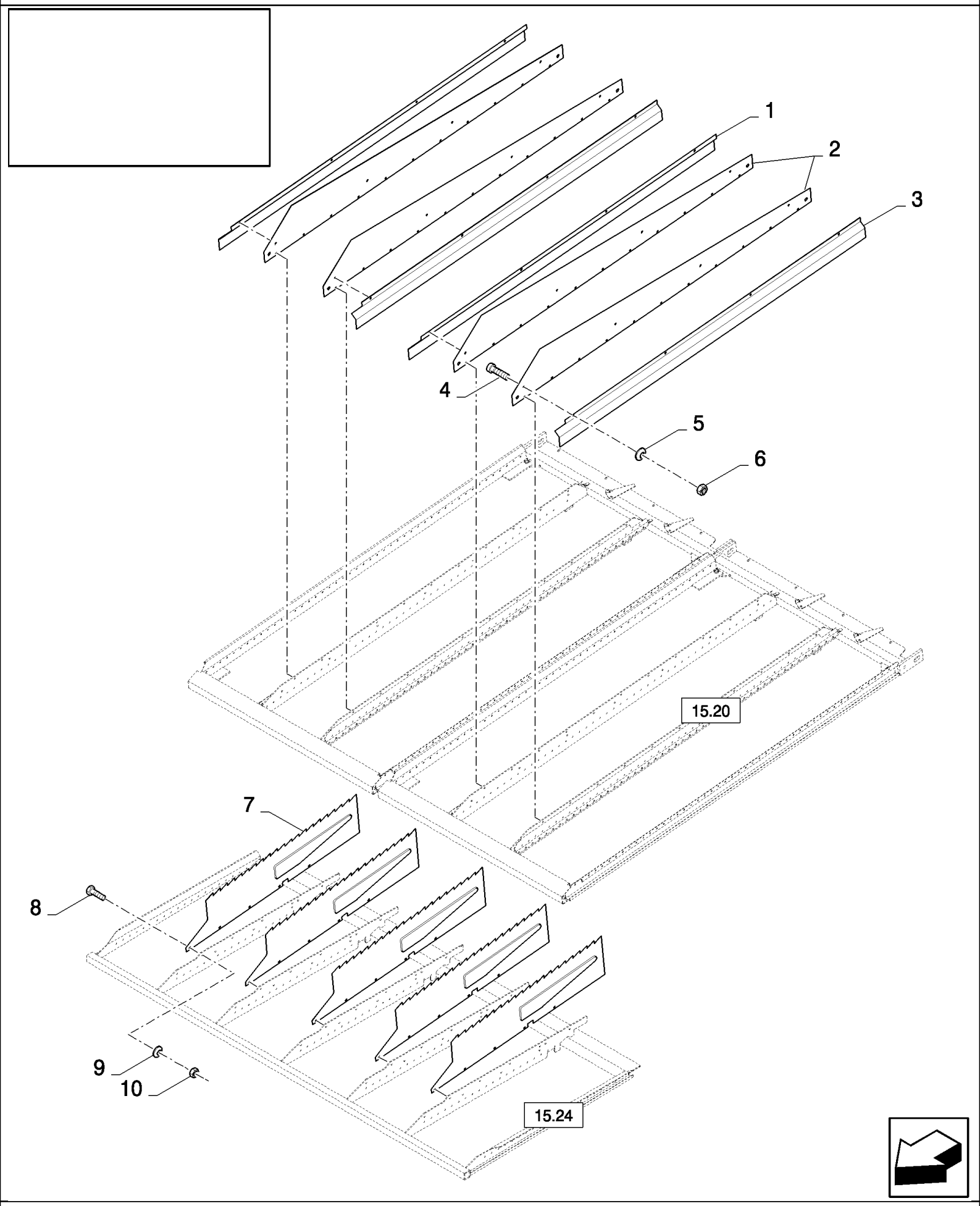

CX880 COMBINE - BASE UNIT (2/01-)

15.26(01) EXTENDED DIVIDERS

ссылка	Номер детали	Кол-во	Описание
1	9506996	2	PLATE, , FOR CX820, CX840, CX860, CX880 ONLY
1	89506790	1	PLATE, , FOR CX720, CX740, CX760, CX780 ONLY
2	ZED922731	4	DIVIDER,
3	9506997	2	PLATE, , FOR CX820, CX840, CX860, CX880 ONLY
3	9506535	1	PLATE, , FOR CX720, CX740, CX760, CX780 ONLY
4	86585706	AR	SCREW, Cross Pan Hd, M4 x 10,
5	322355	AR	WASHER, Belleville, M4,
6	100012	AR	NUT, M4, Cl 8,
7	84432300	5	DIVIDER, , FOR CX820, CX840, CX860, CX880 ONLY
7	84432300	4	DIVIDER, , FOR CX720, CX740, CX760, CX780 ONLY
8	300806	AR	SCREW, Hex, M5 x 10, 8.8, Full Thd,
9	322356	AR	WASHER, 5MM
10	86508813	AR	NUT, M5, Cl 8,

15.27(01) ECCENTRIC AND SHAKER SHOE DRIVE

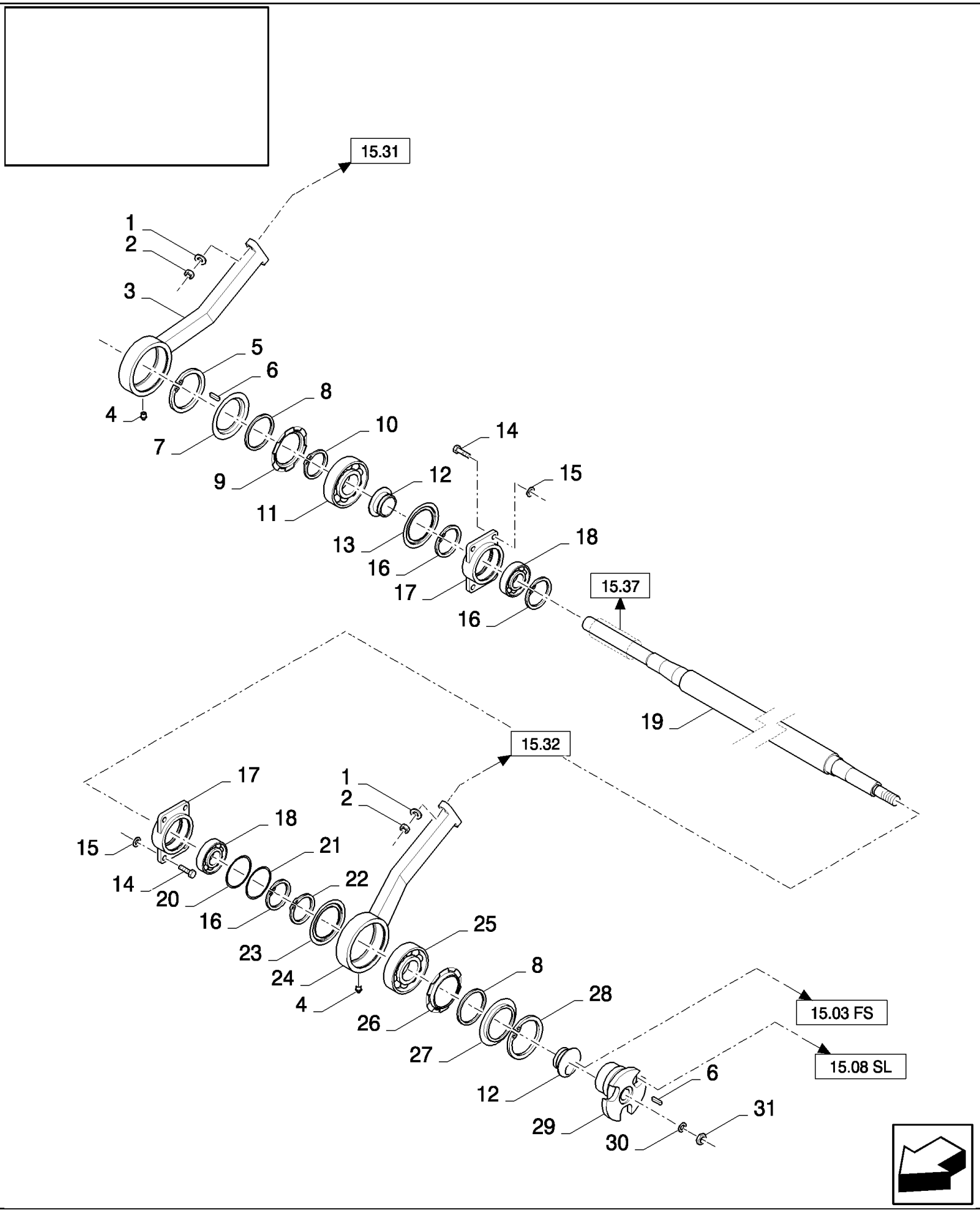

CX880 COMBINE - BASE UNIT (2/01-)

15.27(01) ECCENTRIC AND SHAKER SHOE DRIVE

ссылка	Номер детали	Кол-во	Описание
1	140018	4	WASHER, M12 x 24 x 2.5, , BSN C479
1	86511324	4	WASHER, M12 x 24 x 2.5, , ASN D480
2	100038	4	NUT, M12 x 1.75, Cl 8,
3	84320634	1	ARM, , FOR SELF LEVELLING ONLY
3	84320626	1	ARM, , FOR FIXED SHOE ONLY
4	321204	2	NIPPLE, LUBE, M6 x 1, 16mm lg,
5	370014	1	RING, SNAP, M130, Int,
6	9817851	2	KEY,
7	9832769	1	FLANGE,
8	448736	2	SEALRING,
9	9831118	1	FLANGE,
10	9832771	1	CIRCLIP,
11	9833081	1	BEARING, BALL,
12	9832765	1	ECCENTRIC, , FOR SELF LEVELLING ONLY
12	9832765	2	ECCENTRIC, , FOR FIXED SHOE ONLY
13	9832772	1	RING,
14	300389	8	BOLT, Hex, M12 x 35, 8.8, Full Thd, , FOR SELF LEVELLING ONLY
14	9706687	8	SCREW, Hex, M12 x 30, 8.8, , FOR FIXED SHOE ONLY
15	140046	8	WASHER, Belleville, M12,
16	370013	3	RING, SNAP, M90, Int,
17	84320474	2	HOUSING, BEARING,
18	913716	2	BEARING, BALL,
19	9832762	1	SHAFT, , FOR SELF LEVELLING ONLY, FOR CX820, CX840, CX860, CX880 ONLY
19	84076577	1	SHAFT, , FOR CX820, CX840, CX860, CX880 ONLY, FOR FIXED SHOE ONLY
19	9832763	1	SHAFT, , FOR CX720, CX740, CX760, CX780 ONLY, FOR SELF LEVELLING ONLY
19	84076685	1	SHAFT, , FOR FIXED SHOE ONLY, FOR CX720, CX740, CX760, CX780 ONLY
20	435045	2	SHIM,
21	448780	2	SHIM,
22	449442	1	CIRCLIP, , FOR SELF LEVELLING ONLY
22	9832771	1	CIRCLIP, , FOR FIXED SHOE ONLY
23	388427	1	RING, , FOR SELF LEVELLING ONLY
23	9832772	1	RING, , FOR FIXED SHOE ONLY
24	84320632	1	ARM,
25	210039	1	BEARING, BALL, , FOR SELF LEVELLING ONLY
25	9833081	1	BEARING, BALL, , FOR FIXED SHOE ONLY
26	9831083	1	FLANGE, , FOR SELF LEVELLING ONLY
26	9831118	1	FLANGE, , FOR FIXED SHOE ONLY
27	448735	1	FLANGE, , FOR SELF LEVELLING ONLY
27	9832769	1	FLANGE, , FOR FIXED SHOE ONLY
28	388294	1	RING, SNAP, M125, Int, , FOR SELF LEVELLING ONLY
28	370014	1	RING, SNAP, M130, Int, , FOR FIXED SHOE ONLY
29	84320628	1	ECCENTRIC, , FOR SELF LEVELLING ONLY
30	378247	1	WASHER, 20MM, FOR SELF LEVELLING ONLY
31	320771	1	NUT, Thin, M20 x 1.5, Cl 04, , FOR SELF LEVELLING ONLY

15.28(01) GRAIN PAN, SUPPORTS

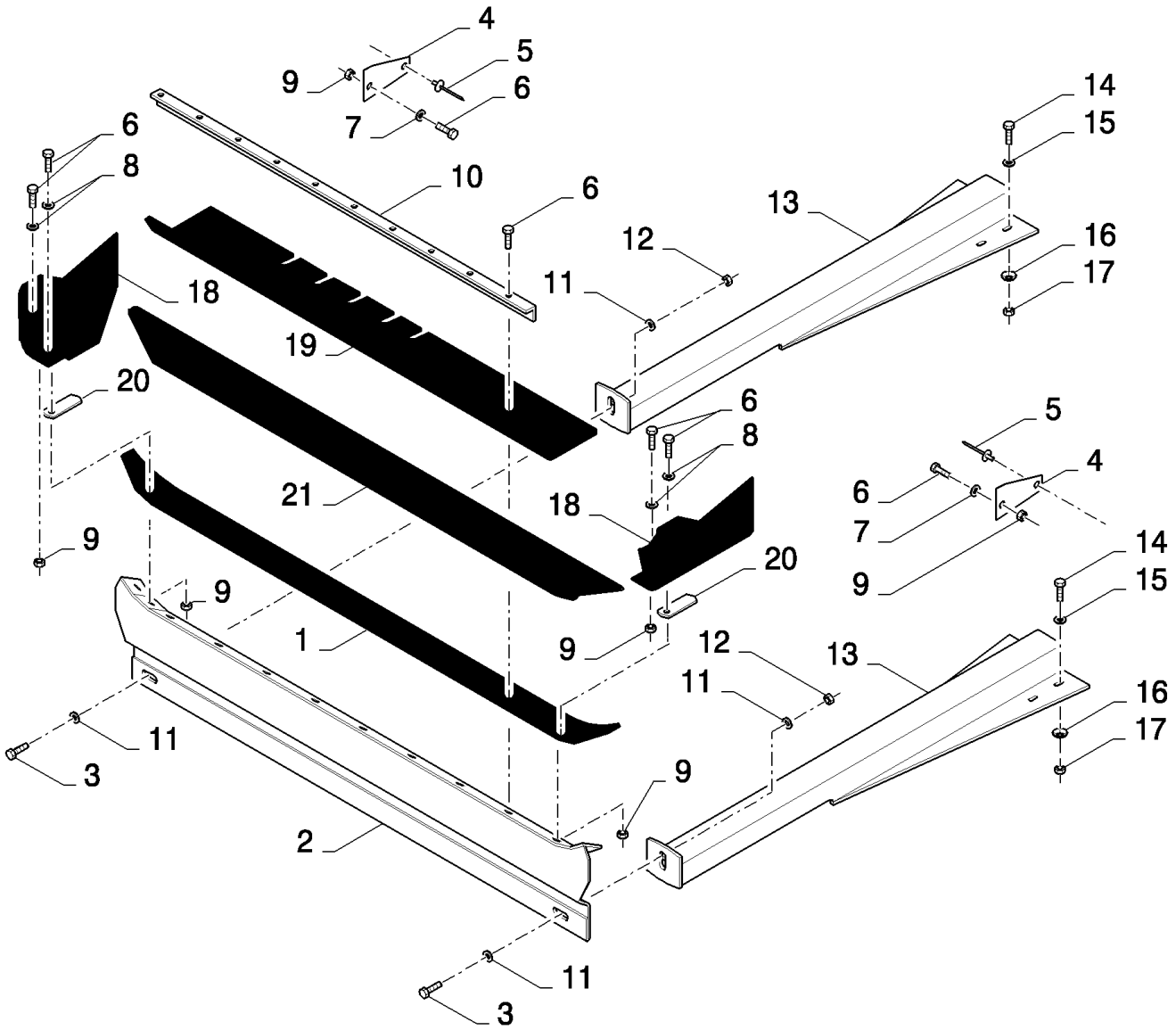

CX880 COMBINE - BASE UNIT (2/01-)

15.28(01) GRAIN PAN, SUPPORTS

ссылка	Номер детали	Кол-во	Описание
1	84005168	1	CANVAS, , FOR CX820, CX840, CX860, CX880 ONLY, BSN C237
1	84440822	1	SEAL, , FOR CX820, CX840, CX860, CX880 ONLY, BSN F238347
1	84454820	1	CANVAS, , FOR CX820, CX840, CX860, CX880 ONLY, ASN D348
1	84005866	1	CANVAS, , FOR CX720, CX740, CX760, CX780 ONLY, BSN C237
1	84440863	1	CANVAS, , FOR CX720, CX740, CX760, CX780 ONLY, BSN F238347
1	84454830	1	CANVAS, , FOR CX720, CX740, CX760, CX780 ONLY, ASN D348
2	84320463	1	SUPPORT, , FOR CX820, CX840, CX860, CX880 ONLY, FOR SELF LEVELLING ONLY
2	84320461	1	SUPPORT, , FOR SELF LEVELLING ONLY, FOR CX720, CX740, CX760, CX780 ONLY
3	43140	2	BOLT, Hex, M10 x 30, 8.8, Full Thd,
4	84989409	2	PLATE,
5	445394	2	RIVET, Pop, M4.8 x 12.7,
6	86977786	AR	BOLT, Hex, M6 x 25, 8.8,
7	322357	AR	WASHER, SPRING, Belleville, M6,
8	140040	4	WASHER, M6 x 22 x 2,
9	353308	AR	NUT, M6 x 1, Cl 8,
10	84000704	1	STRIP, , FOR CX820, CX840, CX860, CX880 ONLY
10	84320380	1	PLATE, FIXING, , FOR CX720, CX740, CX760, CX780 ONLY
11	140045	4	WASHER, SPRING, Belleville, M10,
12	100016	2	NUT, M10, Cl 8,
13	84071753	2	SUPPORT, , FOR SELF LEVELLING ONLY
14	43127	8	BOLT, Hex, M8 x 25, 8.8,
15	140041	8	WASHER, M8 x 28 x 3,
16	412650	16	WASHER, Belleville, M8,
17	89706690	8	NUT, M8, Cl 8,
18	84334904	2	SEAL,
19	84455942	1	CANVAS, , FOR SELF LEVELLING ONLY, FOR CX820, CX840, CX860, CX880 ONLY
19	84005865	1	STRIP, RUBBER, , FOR SELF LEVELLING ONLY, FOR CX720, CX740, CX760, CX780 ONLY
20	84007182	2	BRACKET,
21	9813936	1	CANVAS, , FOR CX820, CX840, CX860, CX880 ONLY, BSN C237
21	84440840	1	CANVAS, , FOR CX820, CX840, CX860, CX880 ONLY, BSN F238315
21	84447129	1	SEAL, , FOR CX820, CX840, CX860, CX880 ONLY, BSN F316383
21	84005167	1	SEAL, RUBBER, , FOR CX820, CX840, CX860, CX880 ONLY, ASN D384
21	9813903	1	CANVAS, , FOR CX720, CX740, CX760, CX780 ONLY, BSN C237
21	84440864	1	CANVAS, , FOR CX720, CX740, CX760, CX780 ONLY, BSN F238315
21	84447130	1	CANVAS, , FOR CX720, CX740, CX760, CX780 ONLY, BSN F316383
21	84455943	1	CANVAS, , FOR CX720, CX740, CX760, CX780 ONLY, ASN D384

15.29(01) GRAIN PAN, SUPPORTS

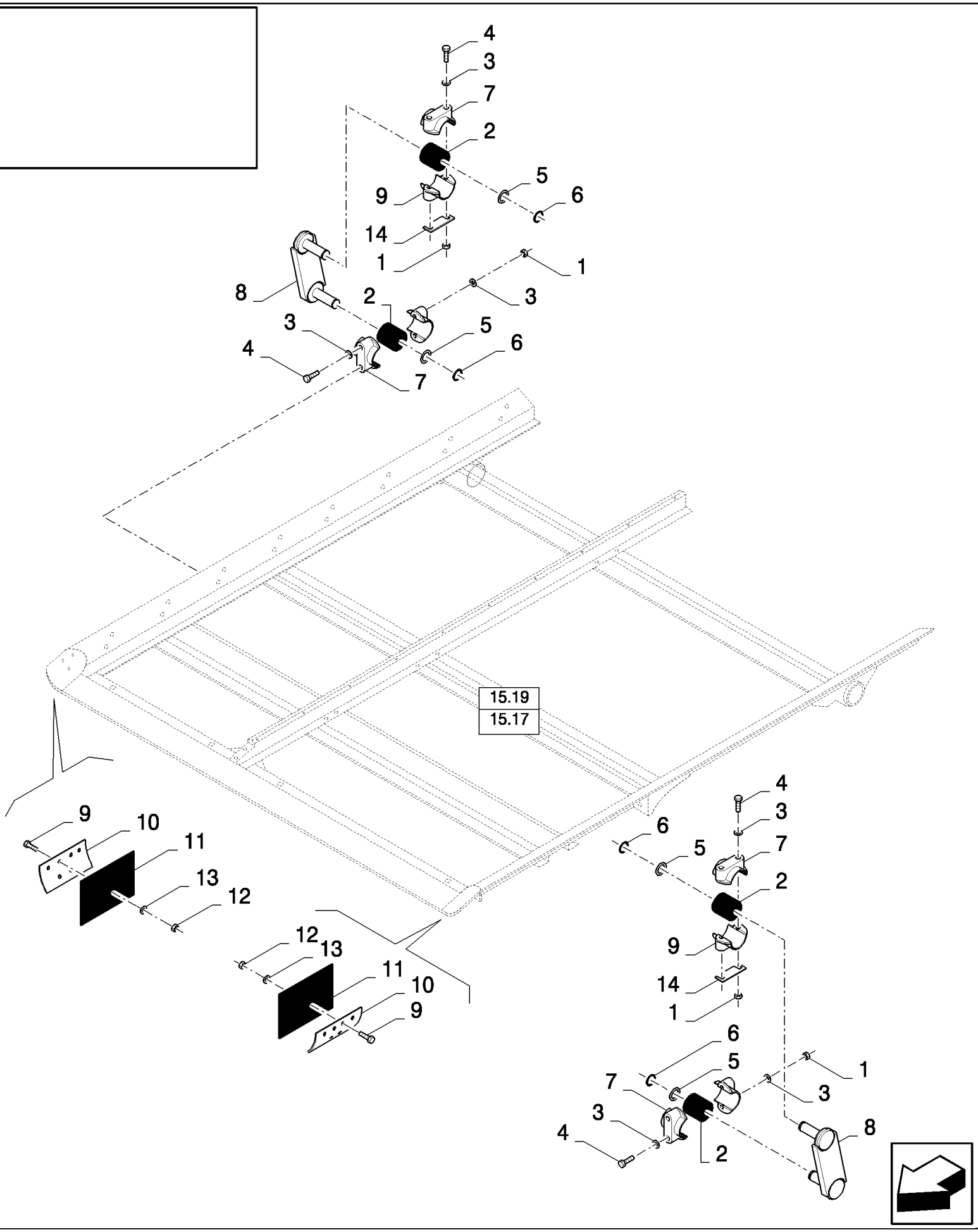

CX880 COMBINE - BASE UNIT (2/01-)

15.29(01) GRAIN PAN, SUPPORTS

ссылка	Номер детали	Кол-во	Описание
1	86629542	8	NUT, LOCK, M8 x 1.25, Cl 8,
2	84000052	4	BUSHING, RUBBER,
3	322358	14	WASHER, SPRING, Belleville, M8,
4	120062	8	BOLT, Hex, M8 x 70, 8.8, , BSN C383
4	120062	4	BOLT, Hex, M8 x 70, 8.8, , ASN D384
4	80331175	4	SCREW, M8x75, ASN D384
5	84032520	4	WASHER, , FOR SELF LEVELLING ONLY
5	84439218	4	WASHER, , FOR FIXED SHOE ONLY
6	300627	4	RING, SNAP, M19, Ext, , FOR SELF LEVELLING ONLY
6	370024	4	RING, SNAP, M20, Ext, , FOR FIXED SHOE ONLY
7	320033	8	HOUSING,
8	84075697	2	ARM, , FOR SELF LEVELLING ONLY
8	84073988	2	ARM, , FOR FIXED SHOE ONLY
9	120100	4	BOLT, Hex, M6 x 20, 8.8,
10	84005240	2	PLATE,
11	84005164	2	SEAL,
12	353308	4	NUT, M6 x 1, Cl 8,
13	140040	4	WASHER, M6 x 22 x 2,
14	84455768	AR	SHIM, , ASN D384

15.30(01) SHAKER SHOE

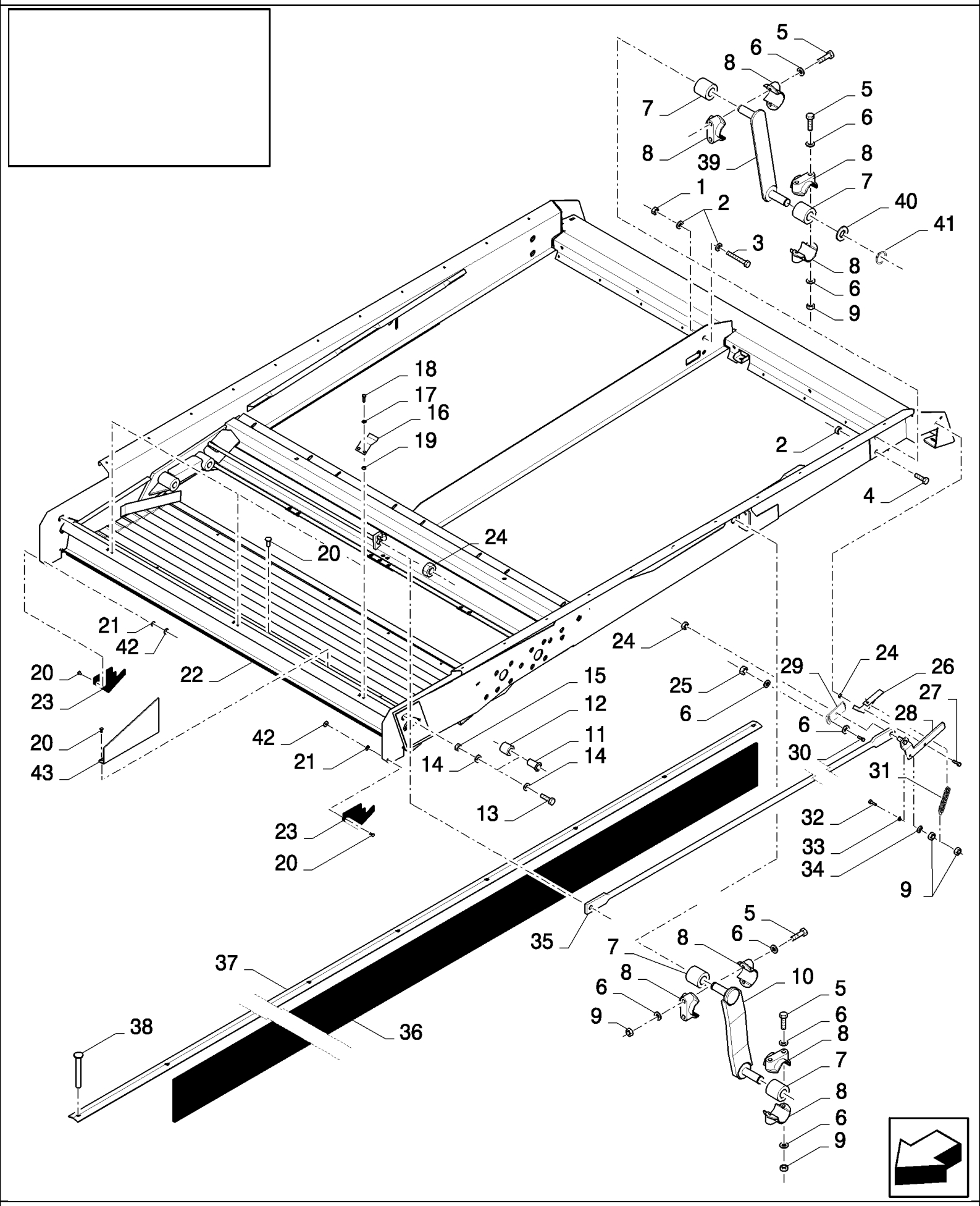

CX880 COMBINE - BASE UNIT (2/01-)

15.30(01) SHAKER SHOE

ссылка	Номер детали	Кол-во	Описание
1	9706685	1	NUT, M12, Cl 8,
2	140046	4	WASHER, Belleville, M12,
3	86629541	1	BOLT, Hex, M12 x 40, 8.8, Full Thd,
4	9706687	2	SCREW, Hex, M12 x 30, 8.8,
5	120062	8	BOLT, Hex, M8 x 70, 8.8,
6	322358	17	WASHER, SPRING, Belleville, M8,
7	84000052	4	BUSHING, RUBBER,
8	320033	8	HOUSING,
9	86629542	10	NUT, LOCK, M8 x 1.25, Cl 8,
10	84075741	2	ARM, , FOR SELF LEVELLING ONLY, BSN C479
10	87318338	2	ARM, , FOR SELF LEVELLING ONLY, ASN D480
11	84052651	2	BUSHING,
12	338222	2	BUSHING, RUBBER,
13	350616	2	SCREW, Hex, M16 x 90, 8.8,
14	378246	4	WASHER, 16MM
14	333040	2	WASHER, 16MM, FOR FIXED SHOE ONLY
15	86000441	2	NUT, M16 x 2, Cl 8,
16	84989607	3	CLIP, SPRING,
17	412649	6	WASHER, SPRING, Belleville, M6,
18	86512439	6	SCREW, Short NK, M6 x 16, Cl8.8, Full Thd,
19	15896221	6	NUT, M6, Cl 10,
20	445394	AR	RIVET, Pop, M4.8 x 12.7, , FOR SELF LEVELLING ONLY
20	300806	4	SCREW, Hex, M5 x 10, 8.8, Full Thd, , FOR FIXED SHOE ONLY
21	140182	4	WASHER, M5 x 18 x 2, , FOR SELF LEVELLING ONLY
21	322356	4	WASHER, , FOR FIXED SHOE ONLY
22	84071133	1	SHOE, SHAKER, , FOR SELF LEVELLING ONLY, FOR CX820, CX840, CX860, CX880 ONLY
22	84073604	1	SHOE, SHAKER, , FOR SELF LEVELLING ONLY, FOR CX720, CX740, CX760, CX780 ONLY
22	84071133	1	SHOE, SHAKER, , FOR FIXED SHOE ONLY, FOR CX820, CX840, CX860, CX880 ONLY, BSN C371
22	84452936	1	SHOE, SHAKER, , FOR CX820, CX840, CX860, CX880 ONLY, FOR FIXED SHOE ONLY, ASN D372
22	84073604	1	SHOE, SHAKER, , FOR FIXED SHOE ONLY, FOR CX720, CX740, CX760, CX780 ONLY, BSN C371
22	84452943	1	SHOE, SHAKER, , FOR CX720, CX740, CX760, CX780 ONLY, FOR FIXED SHOE ONLY, ASN D372
23	84989167	1	SEAL, , FOR SELF LEVELLING ONLY
23	84989257	1	PLATE, , FOR FIXED SHOE ONLY
24	353308	3	NUT, M6 x 1, Cl 8,
25	89706690	1	NUT, M8, Cl 8,
26	84434086	1	HANDLE,
27	86508568	1	SCREW, Hex, M6 x 16, 8.8,
28	84433811	1	HANDLE,
29	84433795	1	PLATE,
30	120104	1	SCREW, Hex, M8 x 20, 8.8,
31	9832711	1	SPRING,
32	300381	1	BOLT, Hex, M8 x 35, 8.8, M8x35
33	378243	1	WASHER, M8,
34	397881	1	WASHER, SPRING,

15.30(01) SHAKER SHOE

ссылка	Номер детали	Кол-во	Описание
35	84073571	1	SUPPORT,
36	84071063	2	SEAL,
37	84076111	2	STRIP,
38	80445395	22	RIVET,
39	84052271	2	ARM, , FOR FIXED SHOE ONLY
40	84032520	4	WASHER, , FOR FIXED SHOE ONLY
41	300627	4	RING, SNAP, M19, Ext, , FOR FIXED SHOE ONLY
42	86508813	4	NUT, M5, Cl 8, , FOR FIXED SHOE ONLY
43	84320285	AR	DIVIDER, , FOR FIXED SHOE ONLY, BSN C371

15.31(01) SHAKER SHOE

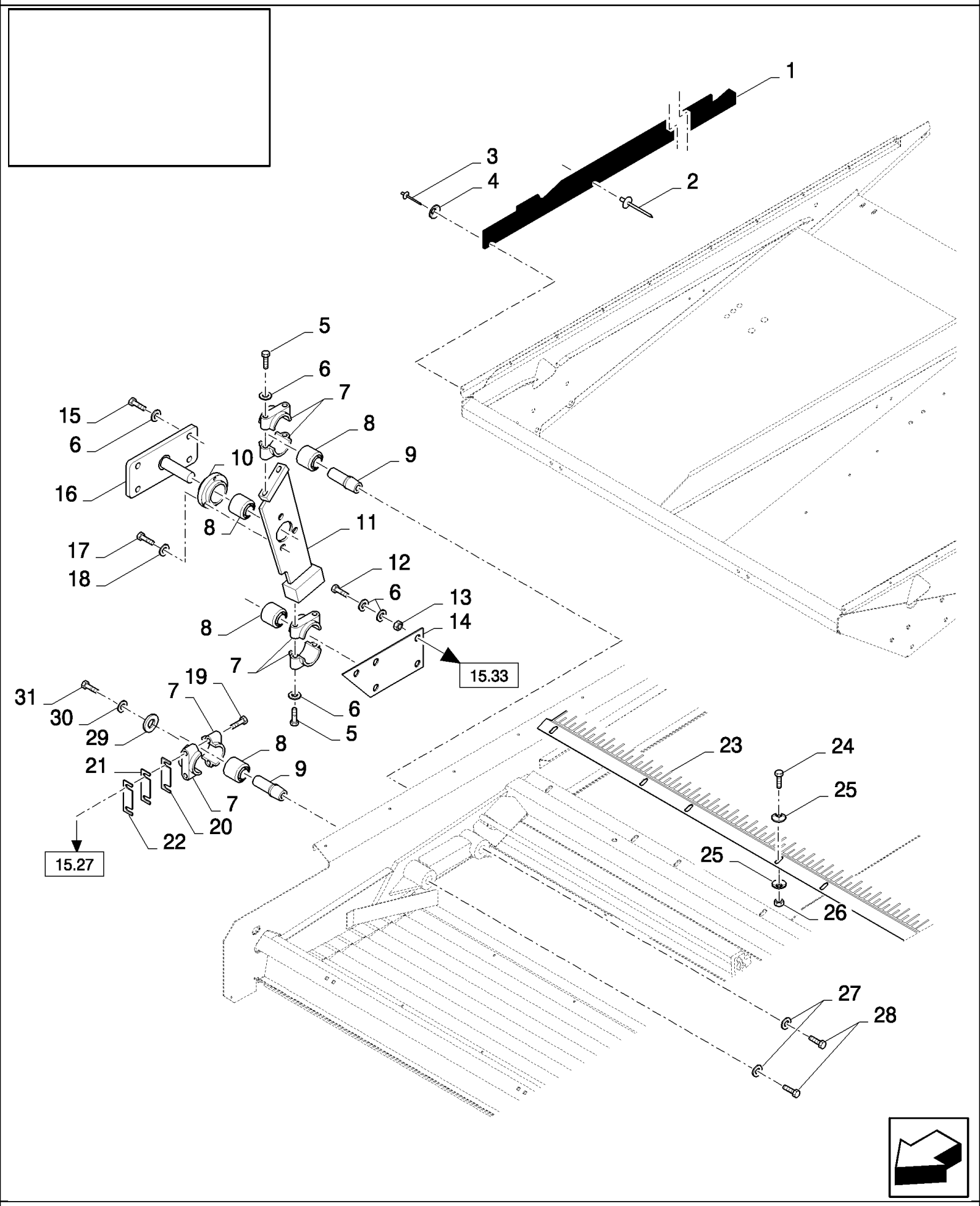

CX880 COMBINE - BASE UNIT (2/01-)

15.31(01) SHAKER SHOE

ссылка	Номер детали	Кол-во	Описание
1	84320269	2	CANVAS, , BSN C285
1	84441040	2	SEAL, , ASN D286
2	335305	18	RIVET,
3	NS	2	NOT SERVICED, Rivet
4	322356	2	WASHER,
5	80300810	4	SCREW, M12x85
6	140046	18	WASHER, Belleville, M12,
7	84032313	6	HOUSING, BEARING, , BSN C315
7	84446877	6	HOUSING, BEARING, , ASN D316
8	80442446	4	BUSHING, RUBBER, , BSN C511
8	84459072	4	BUSHING, RUBBER, , ASN D512
9	84037184	2	SHAFT, , FOR SELF LEVELLING ONLY
9	919637	2	SHAFT, , FOR FIXED SHOE ONLY
10	9811082	1	BUSHING,
11	84320468	1	ARM,
12	9706687	5	SCREW, Hex, M12 x 30, 8.8,
13	9706685	5	NUT, M12, Cl 8,
14	84334453	1	SUPPORT,
15	86629541	4	BOLT, Hex, M12 x 40, 8.8, Full Thd,
16	84320472	1	SUPPORT, , FOR SELF LEVELLING ONLY
16	84320470	1	SUPPORT, , FOR FIXED SHOE ONLY
17	9706704	3	BOLT, Hex, M10 x 35, 8.8, Full Thd,
18	140045	3	WASHER, SPRING, Belleville, M10,
19	9501756	2	BOLT, Hex, M12 x 110, 10.9,
20	445473	1	SHIM, THK.: 1MM
21	445474	1	SHIM, THK.: 0.5MM
22	445472	1	PLATE, ADJUSTING, THK.: 3MM
23	84989436	1	RAKE, , FOR CX820, CX840, CX860, CX880 ONLY
23	84989439	1	RAKE, , FOR CX720, CX740, CX760, CX780 ONLY
24	120104	AR	SCREW, Hex, M8 x 20, 8.8,
25	412650	AR	WASHER, Belleville, M8,
26	89706690	AR	NUT, M8, Cl 8,
27	86592702	2	WASHER, M16 x 45 x 6, HT, 16MM, FOR SELF LEVELLING ONLY
27	394631	2	WASHER, , FOR FIXED SHOE ONLY
28	120091	2	BOLT, Hex, M16 x 60, 8.8,
29	919636	1	PLATE, , FOR FIXED SHOE ONLY
30	140045	1	WASHER, SPRING, Belleville, M10, , FOR FIXED SHOE ONLY
31	43138	1	SCREW, Hex, M10 x 20, 8.8, Full Thd, , FOR FIXED SHOE ONLY

15.32(01) SHAKER SHOE

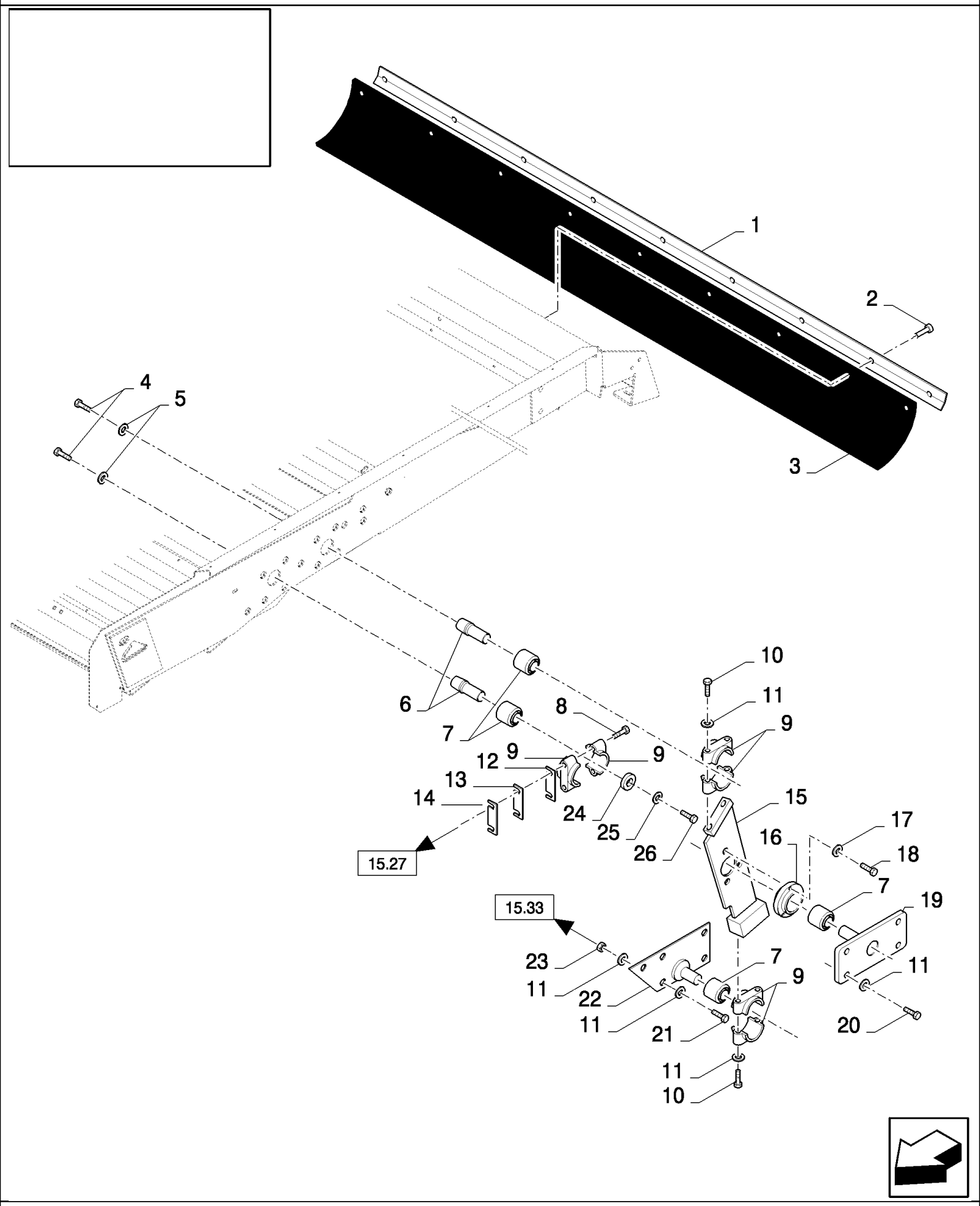

CX880 COMBINE - BASE UNIT (2/01-)

15.32(01) SHAKER SHOE

ссылка	Номер детали	Кол-во	Описание
1	84989486	1	STRIP, , FOR CX820, CX840, CX860, CX880 ONLY
1	84075413	1	STRIP, , FOR CX720, CX740, CX760, CX780 ONLY
2	80445395	AR	RIVET,
3	84064432	1	SEAL, , FOR CX820, CX840, CX860, CX880 ONLY
3	84075387	1	SEAL, , FOR CX720, CX740, CX760, CX780 ONLY
4	120091	2	BOLT, Hex, M16 x 60, 8.8,
5	86592702	2	WASHER, M16 x 45 x 6, HT, 16MM
6	84037184	2	SHAFT, , FOR SELF LEVELLING ONLY
6	919637	2	SHAFT, , FOR FIXED SHOE ONLY
7	80442446	4	BUSHING, RUBBER, , BSN C511
7	84459072	4	BUSHING, RUBBER, , ASN D512
8	9501756	2	BOLT, Hex, M12 x 110, 10.9,
9	84032313	6	HOUSING, BEARING, , BSN C315
9	84446877	6	HOUSING, BEARING, , ASN D316
10	80300810	4	SCREW, M12x85
11	140046	AR	WASHER, Belleville, M12,
12	445474	1	SHIM, THK.: 0.5MM
13	445473	1	SHIM, THK.: 1MM
14	445472	1	PLATE, ADJUSTING, THK.: 3MM
15	84320466	1	ARM,
16	9811082	1	BUSHING,
17	140045	3	WASHER, SPRING, Belleville, M10,
18	9706704	3	BOLT, Hex, M10 x 35, 8.8, Full Thd,
19	84320470	1	SUPPORT,
20	86629541	4	BOLT, Hex, M12 x 40, 8.8, Full Thd,
21	9706687	5	SCREW, Hex, M12 x 30, 8.8,
22	84334452	1	SUPPORT,
23	9706685	5	NUT, M12, Cl 8,
24	919636	1	PLATE, , FOR FIXED SHOE ONLY
25	140045	1	WASHER, SPRING, Belleville, M10, , FOR FIXED SHOE ONLY
26	43138	1	SCREW, Hex, M10 x 20, 8.8, Full Thd, , FOR FIXED SHOE ONLY

15.33(01) SHAKER SHOE

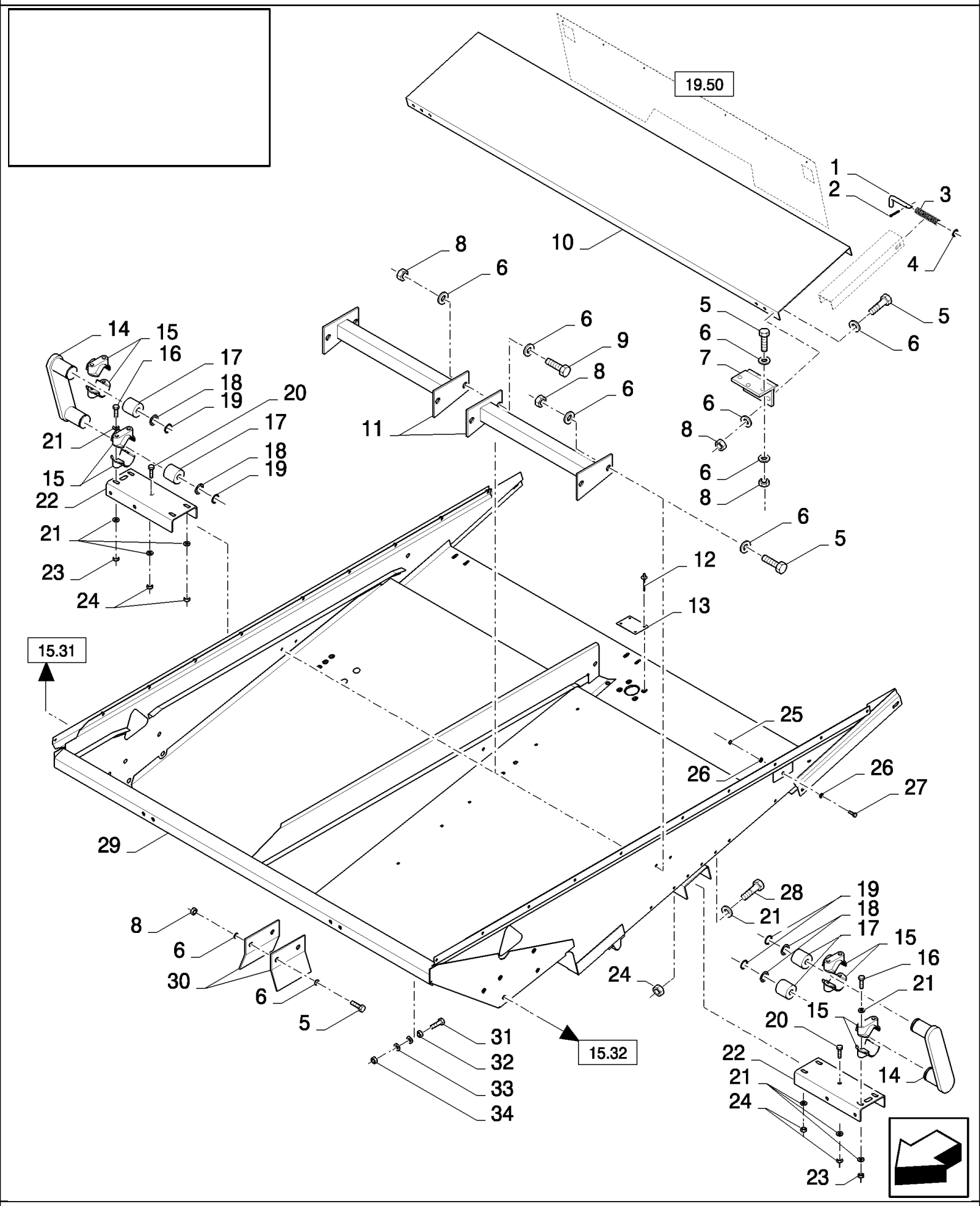

CX880 COMBINE - BASE UNIT (2/01-)

15.33(01) SHAKER SHOE

ссылка	Номер детали	Кол-во	Описание
1	394549	2	HANDLE,
2	130003	2	PIN, SPLIT (COTTER), M3.2 x 20,
3	84814911	2	SPRING, , BSN C277
3	84814911	2	SPRING, , ASN D278
4	140223	2	WASHER,
5	86508568	8	SCREW, Hex, M6 x 16, 8.8,
6	412649	14	WASHER, SPRING, Belleville, M6,
7	9833212	3	HINGE,
8	15896221	14	NUT, M6, Cl 10,
9	120100	2	BOLT, Hex, M6 x 20, 8.8,
10	84073622	1	COVER, , FOR CX820, CX840, CX860, CX880 ONLY
10	84073389	1	COVER, , FOR CX720, CX740, CX760, CX780 ONLY
11	84320452	2	PROFILE, , FOR CX820, CX840, CX860, CX880 ONLY
11	84320454	2	PROFILE, , FOR CX720, CX740, CX760, CX780 ONLY
12	NS	4	NOT SERVICED, Rivet
13	84056659	1	COVER,
14	9832413	2	ARM, , FOR SELF LEVELLING ONLY, BSN C265
14	84438529	2	ARM, , FOR SELF LEVELLING ONLY, ASN D266
14	84022659	2	ARM, , FOR FIXED SHOE ONLY
15	320033	8	HOUSING,
16	120062	4	BOLT, Hex, M8 x 70, 8.8,
17	84000052	4	BUSHING, RUBBER,
18	84032520	4	WASHER,
19	300627	4	RING, SNAP, M19, Ext,
20	412597	2	BOLT, CARRIAGE, Short NK, M8 x 25, Cl8.8, Full Thd,
21	322358	18	WASHER, SPRING, Belleville, M8,
22	747826	2	SUPPORT, , FOR SELF LEVELLING ONLY
23	86629542	12	NUT, LOCK, M8 x 1.25, Cl 8,
24	9706690	6	NUT, M8, Cl 8,
25	9706685	1	NUT, M12, Cl 8,
26	140046	2	WASHER, Belleville, M12,
27	86629541	1	BOLT, Hex, M12 x 40, 8.8, Full Thd,
28	120104	4	SCREW, Hex, M8 x 20, 8.8,
29	84100064	1	SHOE, SHAKER, , FOR CX820, CX840, CX860, CX880 ONLY
29	84100065	1	SHOE, SHAKER, , FOR CX720, CX740, CX760, CX780 ONLY, BSN C277
29	84442559	1	SHOE, SHAKER, , FOR CX720, CX740, CX760, CX780 ONLY, ASN D278
30	84012802	2	PLATE, , FOR CX820, CX840, CX860, CX880 ONLY
31	86977775	1	BOLT, Hex, M10 x 60, 8.8, Full Thd,
32	320648	1	NUT, M10, Cl 8,
33	378244	2	WASHER, M10,
34	100016	1	NUT, M10, Cl 8,

15.34(01) FAN, FRAME

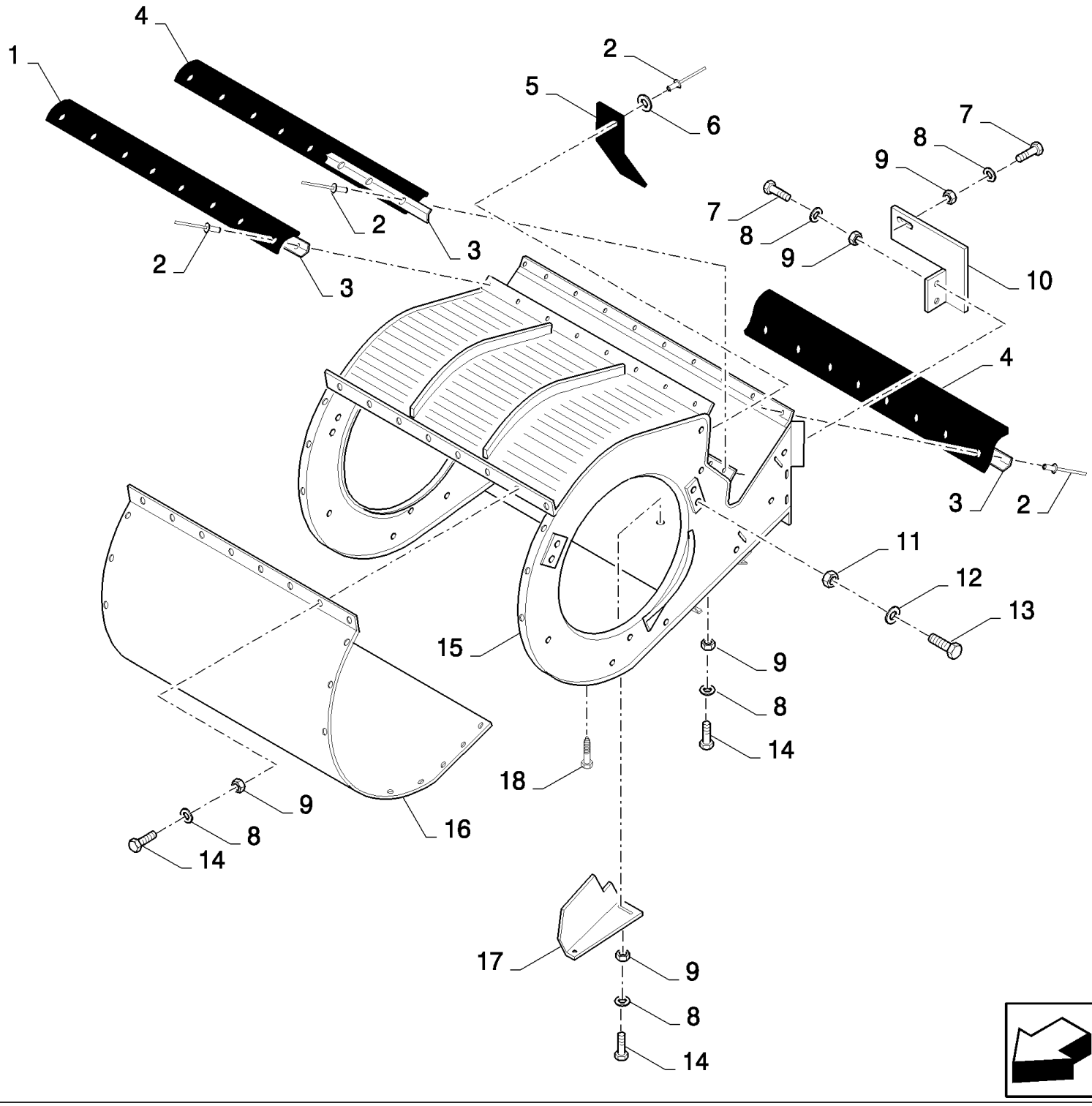

CX880 COMBINE - BASE UNIT (2/01-)

15.34(01) FAN, FRAME

ссылка	Номер детали	Кол-во	Описание
1	84062587	1	CANVAS, , FOR CX720, CX740, CX760, CX780 ONLY
1	84062522	1	STRIP, RUBBER, , FOR CX820, CX840, CX860, CX880 ONLY
2	NS	AR	NOT SERVICED, Rivet
3	451800	3	PLATE, FIXING, , FOR CX720, CX740, CX760, CX780 ONLY
3	747558	3	STRIP, , FOR CX820, CX840, CX860, CX880 ONLY
4	918145	2	CANVAS, , FOR CX720, CX740, CX760, CX780 ONLY
4	9501641	2	CANVAS, , FOR CX820, CX840, CX860, CX880 ONLY
5	84071827	2	SEAL,
6	140182	6	WASHER, M5 x 18 x 2,
7	86512439	6	SCREW, Short NK, M6 x 16, Cl8.8, Full Thd, , FOR FIXED SHOE ONLY
8	322357	AR	WASHER, SPRING, Belleville, M6,
9	15896221	AR	NUT, M6, Cl 10,
10	84072403	1	PLATE, RH, FOR FIXED SHOE ONLY
10	84072404	1	PLATE, LH, FOR FIXED SHOE ONLY
11	100016	4	NUT, M10, Cl 8,
12	140045	4	WASHER, SPRING, Belleville, M10,
13	325829	4	BOLT, Hex, M10 x 45, 8.8, M10x45
14	86508568	7	SCREW, Hex, M6 x 16, 8.8,
15	84072011	1	HOUSING, FAN, , FOR CX720, CX740, CX760, CX780 ONLY
15	84071575	1	HOUSING, FAN, , FOR CX820, CX840, CX860, CX880 ONLY
16	84320562	1	COVER, , FOR CX720, CX740, CX760, CX780 ONLY
16	84334777	1	COVER, , FOR CX820, CX840, CX860, CX880 ONLY
17	84334742	1	DEFLECTOR, RH, FOR CX720, CX740, CX760, CX780 ONLY
17	84334751	1	DEFLECTOR, LH, FOR CX820, CX840, CX860, CX880 ONLY
18	353075	6	SCREW,

15.35(01) FAN, BLOWER AND GUIDES

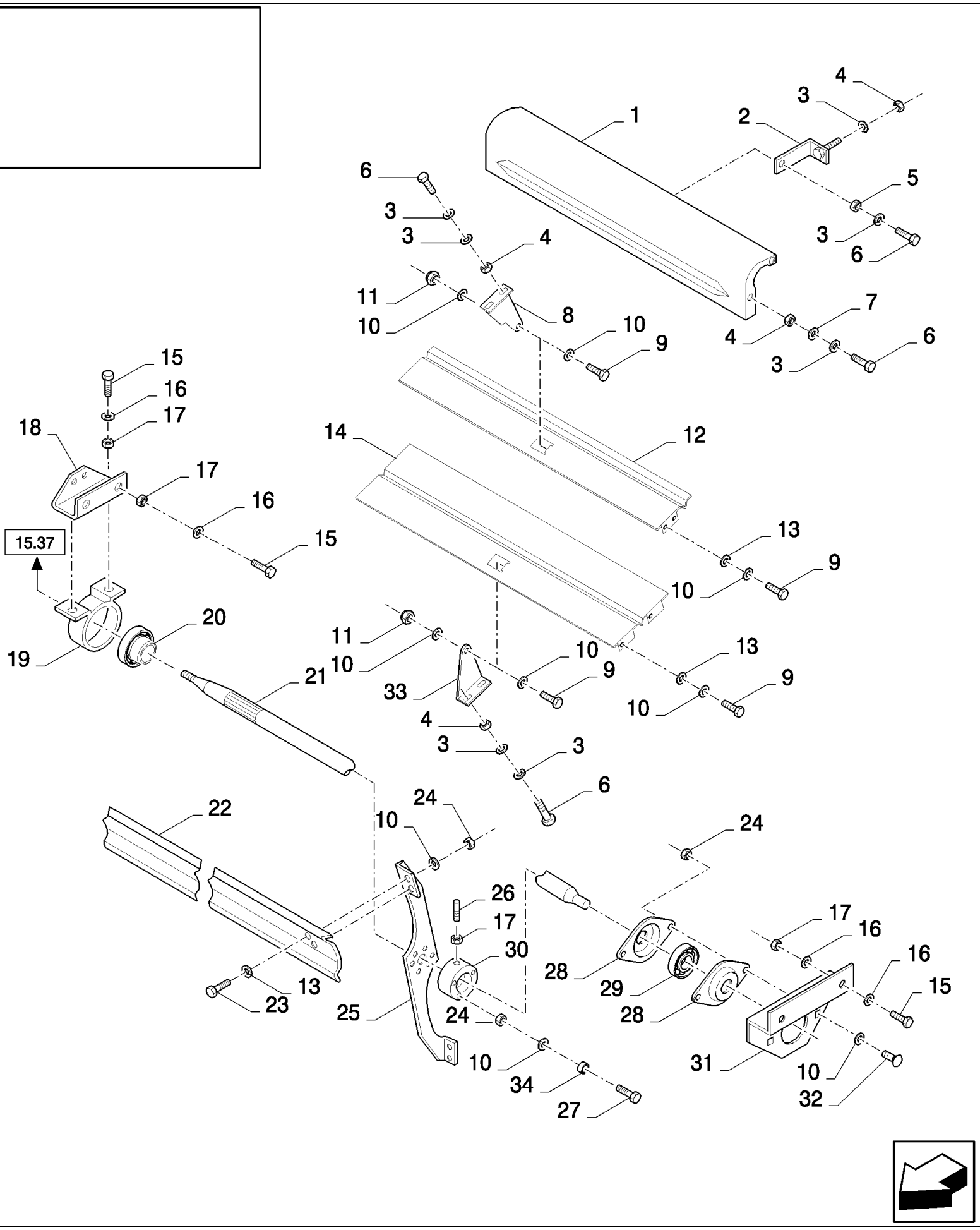

CX880 COMBINE - BASE UNIT (2/01-)

15.35(01) FAN, BLOWER AND GUIDES

ссылка	Номер детали	Кол-во	Описание
1	84320548	1	PLATE, , FOR CX720, CX740, CX760, CX780 ONLY
1	84320550	1	PLATE, , FOR CX820, CX840, CX860, CX880 ONLY
2	438906	2	SUPPORT,
3	412649	AR	WASHER, SPRING, Belleville, M6,
4	15896221	AR	NUT, M6, Cl 10,
5	353308	2	NUT, M6 x 1, Cl 8,
6	86508568	AR	SCREW, Hex, M6 x 16, 8.8,
7	322357	AR	WASHER, SPRING, Belleville, M6,
8	84334663	1	SUPPORT,
10	322358	AR	WASHER, SPRING, Belleville, M8,
11	86629542	2	NUT, LOCK, M8 x 1.25, Cl 8,
12	84334733	1	DEFLECTOR, , FOR CX720, CX740, CX760, CX780 ONLY
12	84334129	1	DEFLECTOR, , FOR CX820, CX840, CX860, CX880 ONLY
13	140041	AR	WASHER, M8 x 28 x 3,
14	84072808	1	DEFLECTOR, , FOR CX720, CX740, CX760, CX780 ONLY
14	84072806	1	DEFLECTOR, , FOR CX820, CX840, CX860, CX880 ONLY
15	43140	AR	BOLT, Hex, M10 x 30, 8.8, Full Thd,
16	140045	AR	WASHER, SPRING, Belleville, M10,
17	100016	AR	NUT, M10, Cl 8,
18	84072134	1	SUPPORT, , FOR FIXED SHOE ONLY
18	84072804	1	SUPPORT, , FOR SELF LEVELLING ONLY
19	748907	1	HOUSING, BEARING,
20	455805	1	BEARING, BALL,
21	84058846	1	SHAFT, , FOR CX720, CX740, CX760, CX780 ONLY
21	84058847	1	SHAFT, , FOR CX820, CX840, CX860, CX880 ONLY
22	84320556	6	BLADE, , FOR CX720, CX740, CX760, CX780 ONLY, BSN C245
22	84441416	6	BLADE, TILLAGE, , FOR CX720, CX740, CX760, CX780 ONLY, ASN D246
22	84320554	6	BLADE, , FOR CX820, CX840, CX860, CX880 ONLY, BSN C245
22	84441406	6	BLADE, TILLAGE, , FOR CX820, CX840, CX860, CX880 ONLY, ASN D246
23	120104	AR	SCREW, Hex, M8 x 20, 8.8,
24	89706690	AR	NUT, M8, Cl 8,
25	84320558	9	SUPPORT,
26	391136	3	SET SCREW, Hex Soc, M10 x 40, M10x40
27	120061	3	BOLT, Hex, M8 x 60, 8.8,
27	43130	6	BOLT, Hex, M8 x 50, 8.8,
28	86548974	2	FLANGE,
29	325103	1	BEARING, BALL,
30	84334753	3	HUB,
31	84072105	1	SUPPORT, , FOR FIXED SHOE ONLY
31	84072104	1	SUPPORT, , FOR SELF LEVELLING ONLY
32	86507486	2	BOLT, CARRIAGE, Short NK, M8 x 20, Cl8.8, Full Thd,
33	84072631	1	SUPPORT,
34	9812123	3	RING,
9	16043224	AR	BOLT, Hex, M8 x 16, 8.8, Full Thd,

15.36(01) CLEANING SHOE FAN GUARD

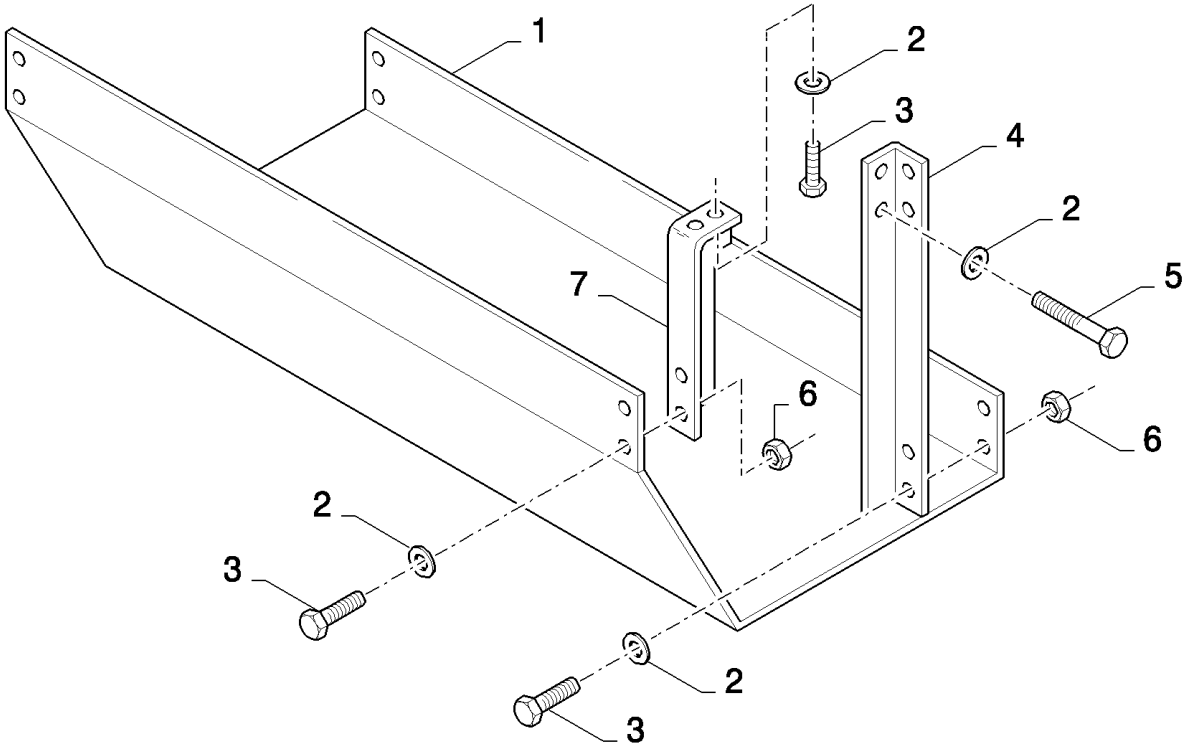

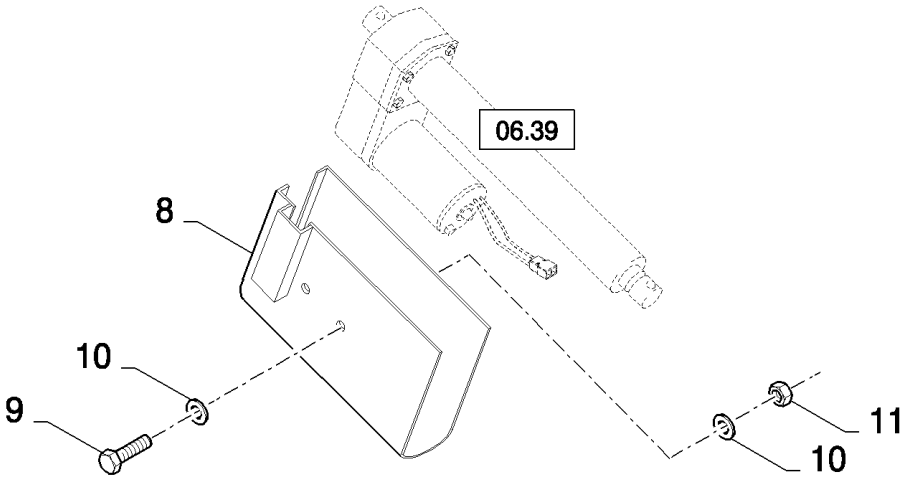

CX880 COMBINE - BASE UNIT (2/01-)

15.36(01) CLEANING SHOE FAN GUARD

ссылка	Номер детали	Кол-во	Описание
1	84334298	1	PLATE, , FOR CX720, CX740, CX760, CX780 ONLY
1	84334295	1	PLATE, , FOR CX820, CX840, CX860, CX880 ONLY
2	140045	AR	WASHER, SPRING, Belleville, M10,
3	43139	AR	SCREW, Hex, M10 x 25, 8.8, Full Thd, M10x25
4	84334557	2	SUPPORT, , FOR SELF LEVELLING ONLY
4	84022683	2	SUPPORT, , FOR FIXED SHOE ONLY
5	43140	8	BOLT, Hex, M10 x 30, 8.8, Full Thd, , FOR FIXED SHOE ONLY
6	100016	AR	NUT, M10, Cl 8,
7	84334571	2	SUPPORT, , FOR SELF LEVELLING ONLY
7	84334243	2	SUPPORT, , FOR FIXED SHOE ONLY
8	84989408	1	PLATE, , FOR SELF LEVELLING ONLY
9	412215	1	BOLT, Hex, M8 x 100, 8.8, , FOR SELF LEVELLING ONLY
10	322358	2	WASHER, SPRING, Belleville, M8, , FOR SELF LEVELLING ONLY
11	86629542	1	NUT, LOCK, M8 x 1.25, Cl 8,

15.37(01) FAN VARI-DRIVE

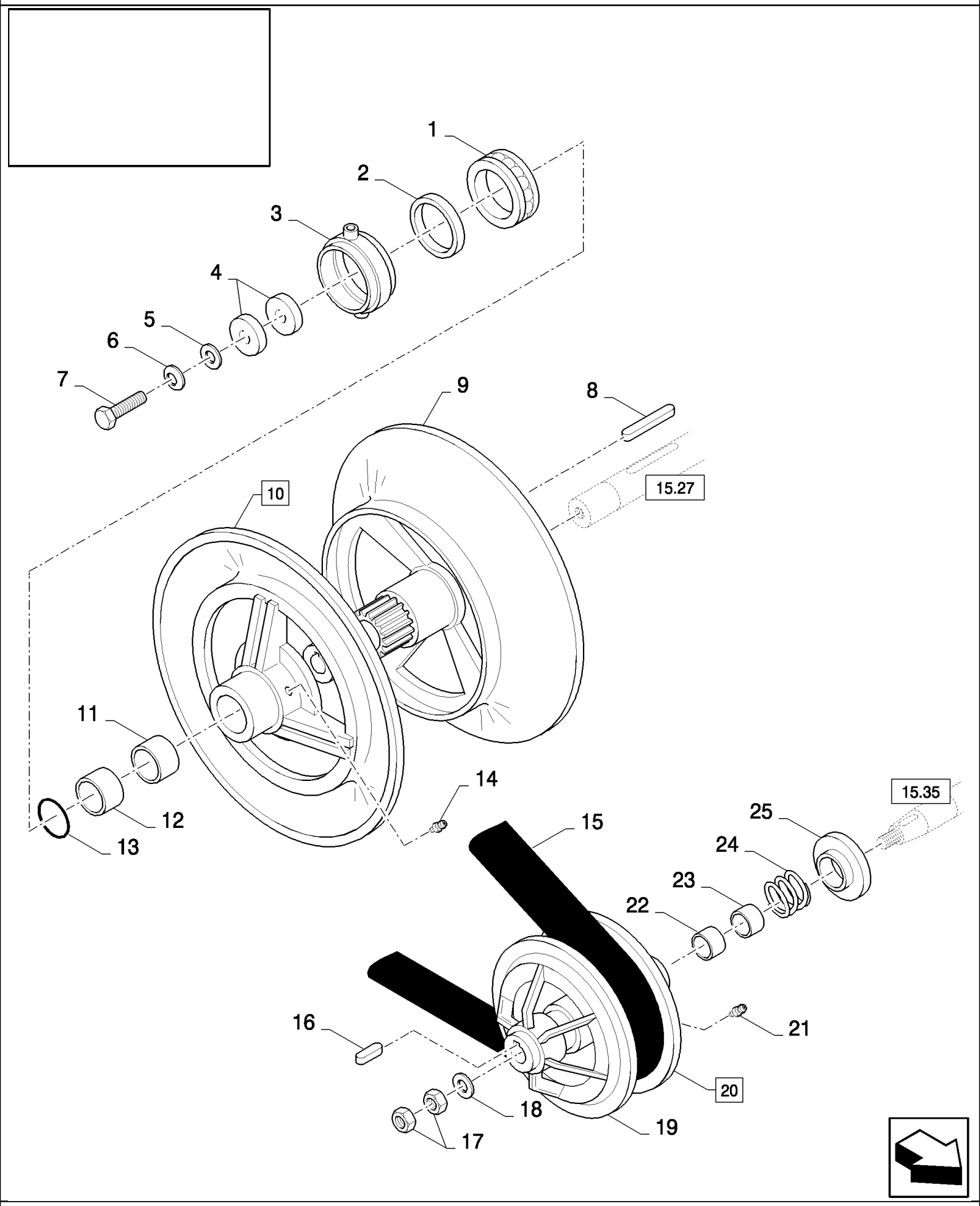

CX880 COMBINE - BASE UNIT (2/01-)

15.37(01) FAN VARI-DRIVE

ссылка	Номер детали	Кол-во	Описание
1	385803	1	BEARING ASSY,
2	9502933	1	GASKET,
3	84078831	1	HOUSING, BEARING,
4	9838302	2	WASHER,
5	378245	1	WASHER, M12,
6	140046	1	WASHER, Belleville, M12,
7	9706717	1	BOLT, Hex, M12 x 70, 8.8, Full Thd, Hex, M12 x 70, 8.8, Full Thd
8	170035	1	KEY,
9	84078841	1	DISC,
10	84078837	1	DISC, (11 to 14)
11	89502347	1	SLEEVE,
12	9503683	1	SLEEVE,
13	84814916	1	O-RING,
14	321204	3	NIPPLE, LUBE, M6 x 1, 16mm lg,
15	9502654	1	BELT, TRANSMISSION, , FOR SELF LEVELLING ONLY
15	919739	1	BELT, TRANSMISSION, , FOR FIXED SHOE ONLY
16	170050	1	KEY,
17	100085	2	NUT, M20 x 1.5, Cl 8,
18	9506874	1	WASHER,
19	84078856	1	DISC,
20	84078828	1	DISC, (21 to 23)
21	321204	3	NIPPLE, LUBE, M6 x 1, 16mm lg,
22	419621	1	BUSHING,
23	429232	1	SLEEVE,
24	388166	1	SPRING,
25	913044	1	WASHER,

15.38(01) FAN VARI-DRIVE

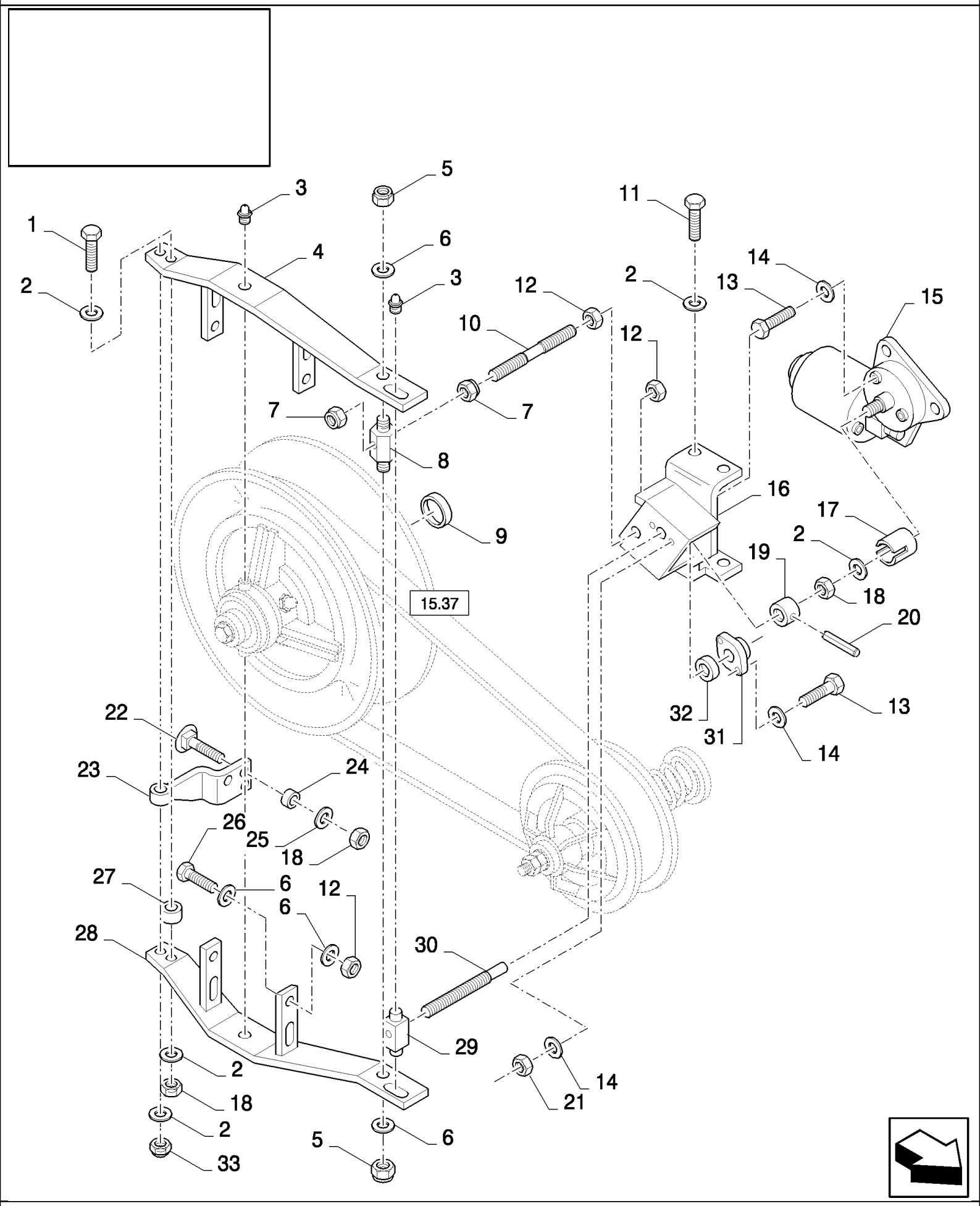

CX880 COMBINE - BASE UNIT (2/01-)

15.38(01) FAN VARI-DRIVE

ссылка	Номер детали	Кол-во	Описание
1	120061	2	BOLT, Hex, M8 x 60, 8.8,
2	322358	AR	WASHER, SPRING, Belleville, M8,
3	321204	2	NIPPLE, LUBE, M6 x 1, 16mm lg,
4	84078827	1	ARM,
5	100037	2	NUT, M10 x 1.5, Cl 8,
6	140045	10	WASHER, SPRING, Belleville, M10,
7	86514720	2	NUT, LOCK,
8	84334216	1	ROD,
9	9832773	1	SPACER, , FOR SELF LEVELLING ONLY
10	397559	1	STUD,
11	43127	4	BOLT, Hex, M8 x 25, 8.8, , FOR SELF LEVELLING ONLY
11	43128	4	BOLT, Hex, M8 x 30, 8.8, , FOR FIXED SHOE ONLY
12	100016	6	NUT, M10, Cl 8,
13	86508568	5	SCREW, Hex, M6 x 16, 8.8,
14	322357	7	WASHER, SPRING, Belleville, M6,
15	86579537	1	MOTOR, ELECTRIC,
16	84078832	1	SUPPORT, , FOR SELF LEVELLING ONLY
16	84078825	1	SUPPORT, , FOR FIXED SHOE ONLY
17	437642	1	BUSHING,
18	89706690	4	NUT, M8, Cl 8,
19	9811470	1	BUSHING,
20	300869	1	PIN, LOCK, M6 x 40, Slotted,
21	15896221	2	NUT, M6, Cl 10,
22	43465	2	BOLT, CARRIAGE, Short NK, M8 x 30, Cl8.8, Full Thd, , FOR SELF LEVELLING ONLY
22	120104	2	SCREW, Hex, M8 x 20, 8.8, , FOR FIXED SHOE ONLY
23	84078829	1	SUPPORT, , FOR SELF LEVELLING ONLY
23	84078826	1	SUPPORT, , FOR FIXED SHOE ONLY
24	309101	2	SPACER, , FOR SELF LEVELLING ONLY
25	412650	2	WASHER, Belleville, M8, , FOR SELF LEVELLING ONLY
25	322358	2	WASHER, SPRING, Belleville, M8, , FOR FIXED SHOE ONLY
26	43139	4	SCREW, Hex, M10 x 25, 8.8, Full Thd, M10x25
27	334056	1	BUSHING,
28	84078838	1	ARM,
29	443796	1	ADJUSTER,
30	9811471	1	SHAFT,
31	443794	1	HOUSING, BEARING,
32	9808450	1	BEARING, BALL,
33	86629542	1	NUT, LOCK, M8 x 1.25, Cl 8,

15.39(01) GRASS SEED EQUIPMENT - ACCESSORIES

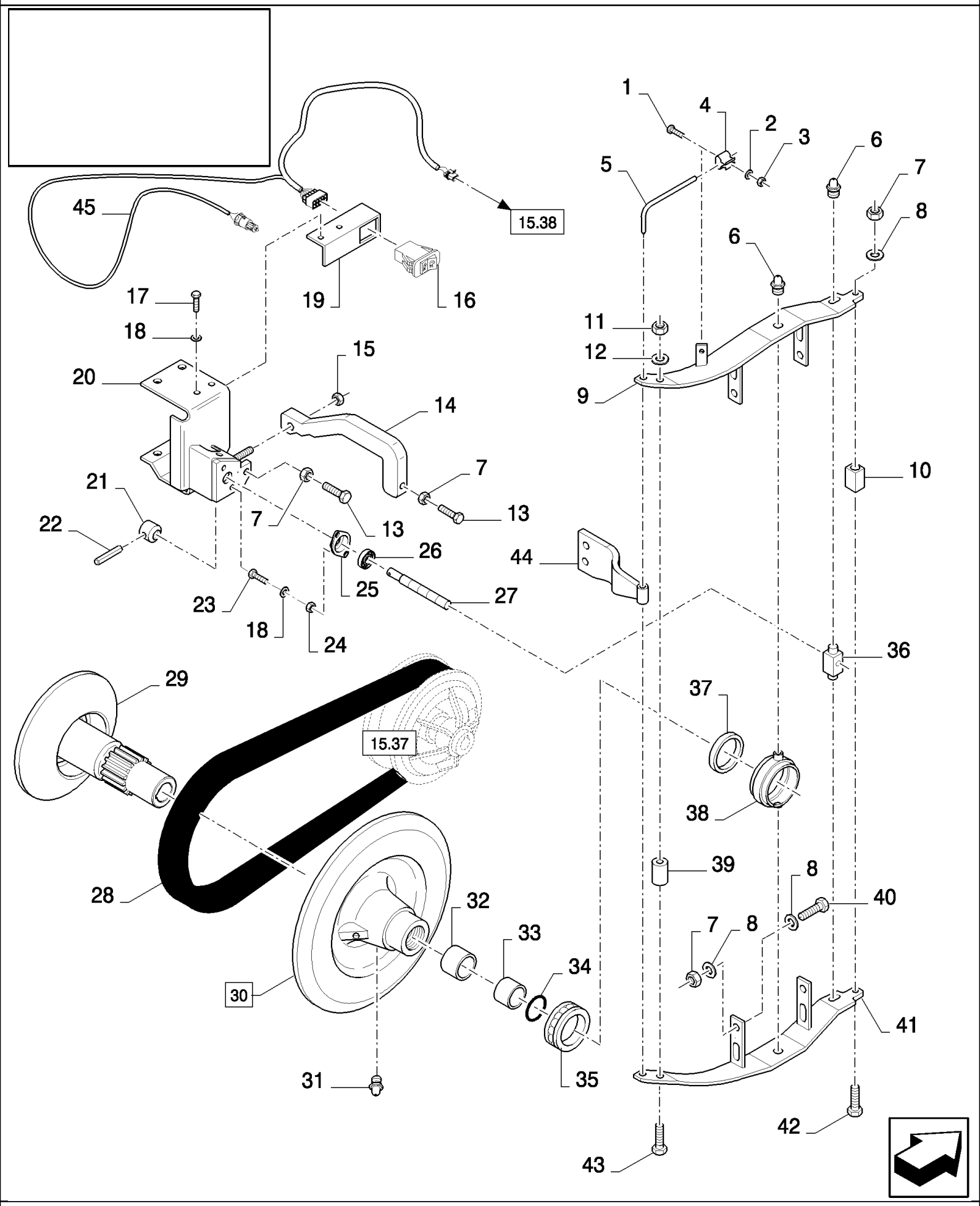

CX880 COMBINE - BASE UNIT (2/01-)

15.39(01) GRASS SEED EQUIPMENT - ACCESSORIES

ссылка	Номер детали	Кол-во	Описание
1	412064	1	SCREW, Hex, M4 x 16, 8.8, Full Thd,
2	322355	1	WASHER, Belleville, M4,
3	100012	1	NUT, M4, Cl 8,
4	323307	1	CLAMP,
5	84023276	1	PIN,
6	321204	2	NIPPLE, LUBE, M6 x 1, 16mm lg,
7	100016	7	NUT, M10, Cl 8,
8	140045	9	WASHER, SPRING, Belleville, M10,
9	84023235	1	ARM,
10	84023232	1	BLOCK,
11	89706690	1	NUT, M8, Cl 8,
12	322358	2	WASHER, SPRING, Belleville, M8,
13	120112	1	BOLT, Hex, M10 x 40, 8.8, Full Thd,
13	120113	1	BOLT, Hex, M10 x 50, 8.8, Full Thd,
14	84023233	1	SUPPORT,
15	100037	1	NUT, M10 x 1.5, Cl 8,
16	9817421	1	SWITCH, FAN, , BSN C205
16	84320265	1	SWITCH, , ASN D206
17	86508568	2	SCREW, Hex, M6 x 16, 8.8,
18	322357	4	WASHER, SPRING, Belleville, M6,
19	84026038	1	BRACKET, , BSN C205
19	84442304	1	BRACKET, , ASN D206
20	84023197	1	SUPPORT, , FOR SELF LEVELLING ONLY
20	84023287	1	SUPPORT, , FOR FIXED SHOE ONLY
21	9811470	1	BUSHING,
22	300869	1	PIN, LOCK, M6 x 40, Slotted,
23	120100	2	BOLT, Hex, M6 x 20, 8.8,
24	15896221	2	NUT, M6, Cl 10,
25	443794	1	HOUSING, BEARING,
26	9808450	1	BEARING, BALL,
27	9811471	1	SHAFT,
28	84023277	1	BELT, , FOR SELF LEVELLING ONLY
28	84023278	1	BELT, TRANSMISSION, , FOR FIXED SHOE ONLY
29	84023306	1	VARIATOR,
30	84023321	1	VARIATOR, (31 to 34)
31	321204	3	NIPPLE, LUBE, M6 x 1, 16mm lg,
32	89502347	1	SLEEVE,
33	9503683	1	SLEEVE,
34	84814916	1	O-RING,
35	385803	1	BEARING ASSY,
36	443796	1	ADJUSTER,
37	9502933	1	GASKET,
38	84078831	1	HOUSING, BEARING,
39	334056	1	BUSHING,

15.39(01) GRASS SEED EQUIPMENT - ACCESSORIES

ссылка	Номер детали	Кол-во	Описание
40	43139	4	SCREW, Hex, M10 x 25, 8.8, Full Thd, M10x25
41	84023237	1	ARM,
42	43144	1	SCREW, Hex, M10 x 70, 8.8,
44	84023208	1	SUPPORT, , FOR SELF LEVELLING ONLY
44	84023298	1	SUPPORT, , FOR FIXED SHOE ONLY
45	86616159	1	HARNESS, WIRE,
43	16044321	1	BOLT, Hex, M8 x 55, 8.8,

CX880 COMBINE - BASE UNIT (2/01-)

15.40(01) AUGER HOUSING, FIXED SHOE

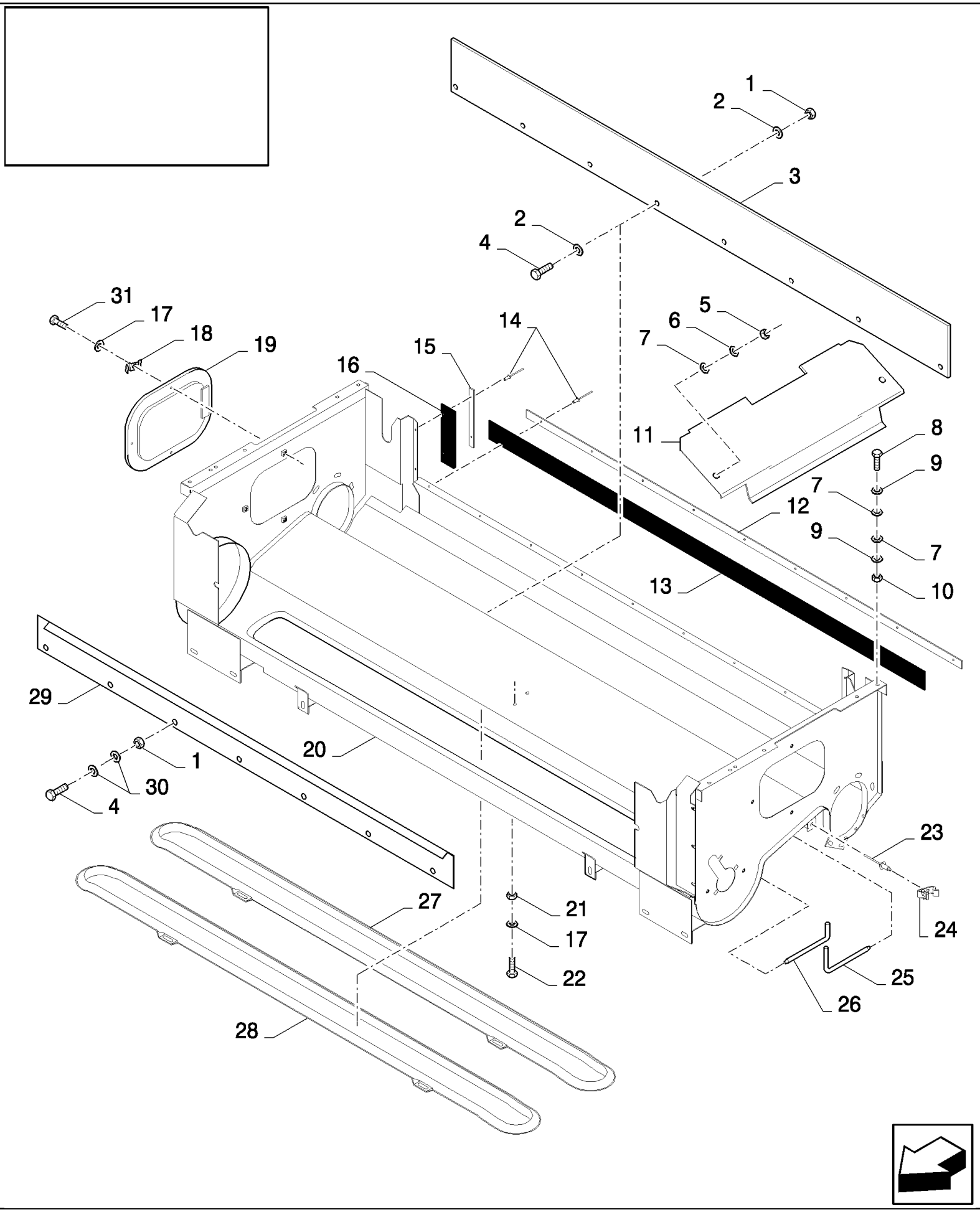

CX880 COMBINE - BASE UNIT (2/01-)

15.40(01) AUGER HOUSING, FIXED SHOE

ссылка	Номер детали	Кол-во	Описание
1	15896221	AR	NUT, M6, Cl 10,
2	322357	AR	WASHER, SPRING, Belleville, M6,
3	84334428	1	PLATE, , FOR CX820, CX840, CX860, CX880 ONLY
3	84334427	1	PLATE, , FOR CX720, CX740, CX760, CX780 ONLY
4	86508568	AR	SCREW, Hex, M6 x 16, 8.8,
5	353308	4	NUT, M6 x 1, Cl 8,
6	140040	4	WASHER, M6 x 22 x 2,
7	190132	AR	WASHER,
8	43128	AR	BOLT, Hex, M8 x 30, 8.8,
8	412479	AR	BOLT, Hex, M8 x 35, 8.8,
8	43129	AR	BOLT, Hex, M8 x 40, 8.8,
9	140041	AR	WASHER, M8 x 28 x 3,
10	86629542	AR	NUT, LOCK, M8 x 1.25, Cl 8,
11	84432892	2	PLATE, , BSN C407
11	84455963	2	PLATE, , ASN D408
12	84320105	1	STRIP, , FOR CX820, CX840, CX860, CX880 ONLY
12	84320080	1	STRIP, , FOR CX720, CX740, CX760, CX780 ONLY
13	84017102	1	CANVAS, , FOR CX820, CX840, CX860, CX880 ONLY, BSN C237
13	9501640	1	CANVAS, , FOR CX820, CX840, CX860, CX880 ONLY, ASN D238
13	922273	1	CANVAS, , FOR CX720, CX740, CX760, CX780 ONLY
14	80445395	AR	RIVET,
15	84320094	2	PLATE, FIXING,
16	922541	2	CANVAS,
17	322358	8	WASHER, SPRING, Belleville, M8,
18	425093	6	CLIP,
19	84320078	2	COVER,
20	84072252	1	HOUSING, , FOR CX820, CX840, CX860, CX880 ONLY, BSN C407
20	84458249	1	HOUSING, , FOR CX820, CX840, CX860, CX880 ONLY, ASN D408
20	84072251	1	HOUSING, , FOR CX720, CX740, CX760, CX780 ONLY, BSN C407
20	84458250	1	HOUSING, , FOR CX720, CX740, CX760, CX780 ONLY, ASN D408
21	89706690	2	NUT, M8, Cl 8,
23	445394	4	RIVET, Pop, M4.8 x 12.7,
24	323307	4	CLAMP,
25	9819720	2	PIN,
26	9819719	2	PIN,
27	84078027	1	COVER, Return Tailings, STANDARD
27	740667	1	COVER, Return Tailings, PERFORATED (LONG HOLES)
27	84429238	1	COVER, Return Tailings, PERFORATED (ROUND HOLES)
28	84078026	1	COVER, Clean Grain, STANDARD
28	84078033	1	COVER, Clean Grain, REINFORCED
28	740666	1	COVER, Clean Grain, PERFORATED (LONG HOLES)
28	84429240	1	COVER, Clean Grain, PERFORATED (ROUND HOLES)
29	84432531	1	PLATE, , FOR CX820, CX840, CX860, CX880 ONLY
29	84432570	1	PLATE, , FOR CX720, CX740, CX760, CX780 ONLY

15.40(01) AUGER HOUSING, FIXED SHOE

ссылка	Номер детали	Кол-во	Описание
30	412649	AR	WASHER, SPRING, Belleville, M6,
31	120104	6	SCREW, Hex, M8 x 20, 8.8,
22	16043224	2	BOLT, Hex, M8 x 16, 8.8, Full Thd,

15.41(01) AUGER HOUSING - SELF-LEVELLING

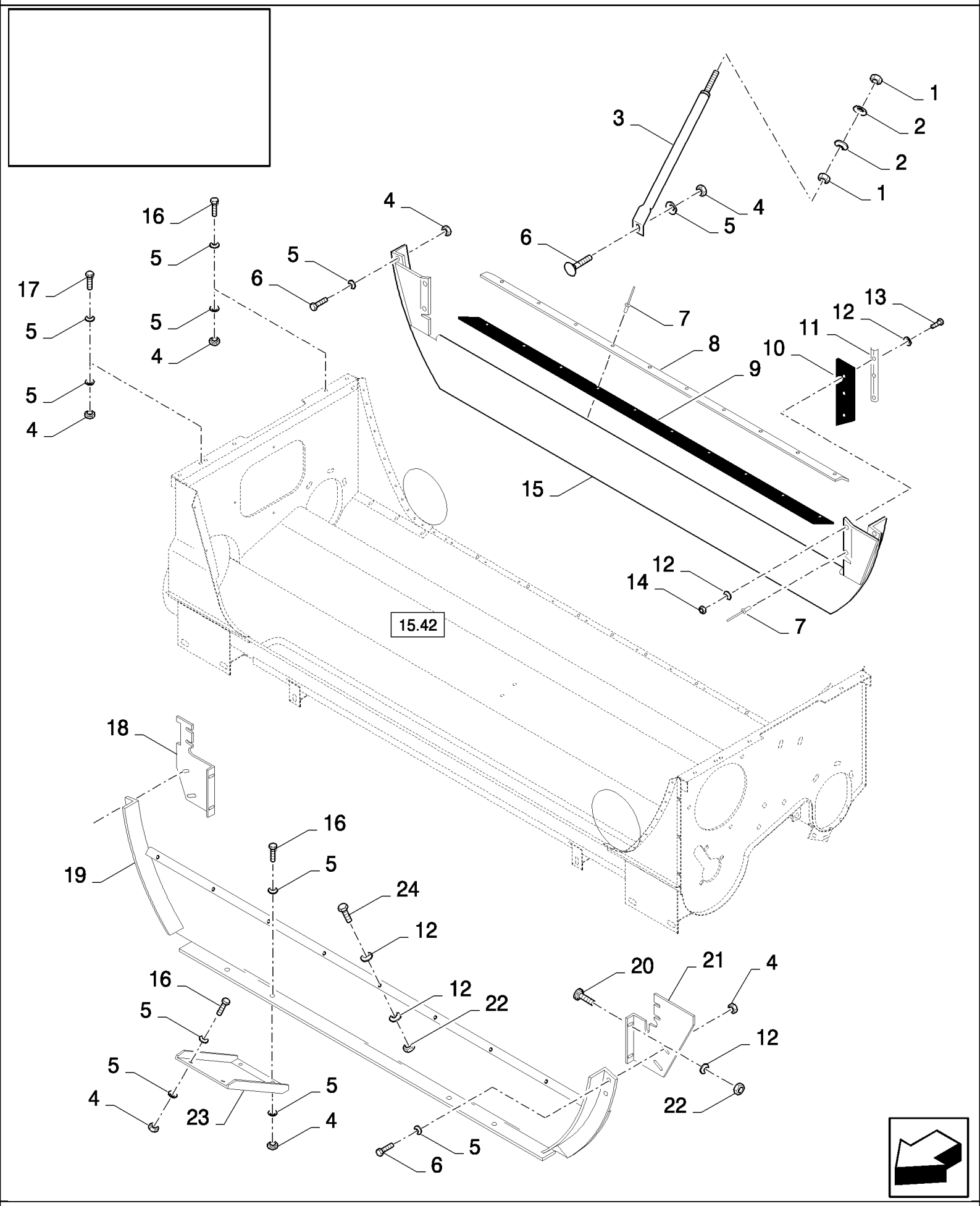

CX880 COMBINE - BASE UNIT (2/01-)

15.41(01) AUGER HOUSING - SELF-LEVELLING

ссылка	Номер детали	Кол-во	Описание
1	9706685	4	NUT, M12, Cl 8,
2	140046	4	WASHER, Belleville, M12,
3	444439	1	SUPPORT, RH
3	444438	1	SUPPORT, LH
4	89706690	AR	NUT, M8, Cl 8,
5	412650	AR	WASHER, Belleville, M8,
6	86507486	8	BOLT, CARRIAGE, Short NK, M8 x 20, Cl8.8, Full Thd,
7	80445395	13	RIVET,
8	84320105	1	STRIP, , FOR CX820, CX840, CX860, CX880 ONLY
8	84320080	1	STRIP, , FOR CX720, CX740, CX760, CX780 ONLY
9	84818311	1	CANVAS, , FOR CX820, CX840, CX860, CX880 ONLY
9	922273	1	CANVAS, , FOR CX720, CX740, CX760, CX780 ONLY
10	922272	2	ELEMENT, SEALING,
11	84320082	2	STRIP,
12	412649	AR	WASHER, SPRING, Belleville, M6,
13	86977786	2	BOLT, Hex, M6 x 25, 8.8,
14	353308	2	NUT, M6 x 1, Cl 8,
15	84320102	1	PLATE, , FOR CX820, CX840, CX860, CX880 ONLY
15	84320098	1	PLATE, , FOR CX720, CX740, CX760, CX780 ONLY
16	120104	AR	SCREW, Hex, M8 x 20, 8.8,
17	43127	2	BOLT, Hex, M8 x 25, 8.8,
18	84320103	1	PLATE,
19	84320100	1	PLATE, , FOR CX820, CX840, CX860, CX880 ONLY
19	84320096	1	PLATE, , FOR CX720, CX740, CX760, CX780 ONLY
20	86512439	4	SCREW, Short NK, M6 x 16, Cl8.8, Full Thd,
21	84320090	1	PLATE,
22	15896221	4	NUT, M6, Cl 10,
23	84320092	2	SUPPORT,
24	86508568	8	SCREW, Hex, M6 x 16, 8.8,

15.42(01) AUGER HOUSING - SELF-LEVELLING

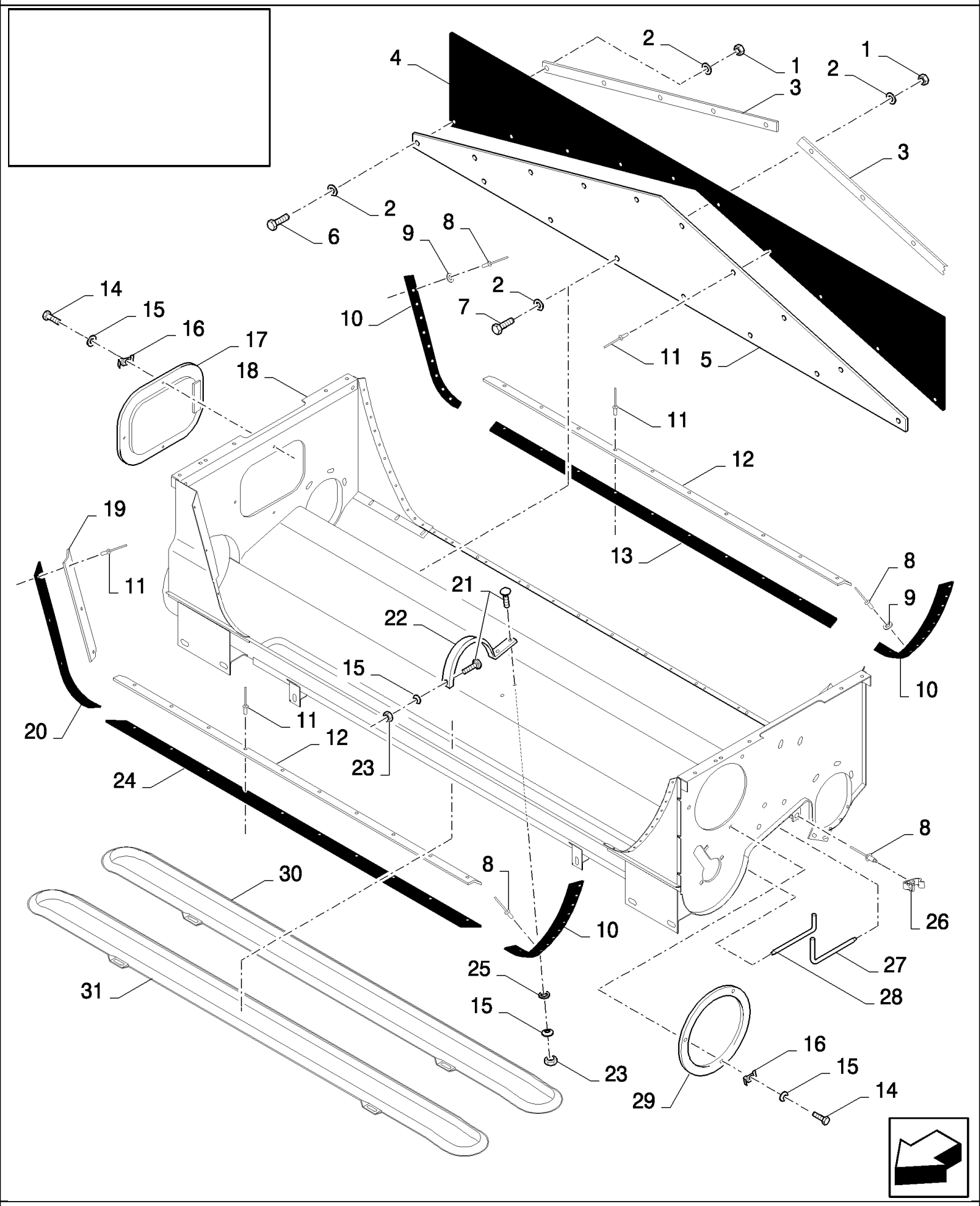

CX880 COMBINE - BASE UNIT (2/01-)

15.42(01) AUGER HOUSING - SELF-LEVELLING

ссылка	Номер детали	Кол-во	Описание
1	15896221	10	NUT, M6, Cl 10,
2	412649	20	WASHER, SPRING, Belleville, M6,
3	84320079	2	STRIP, , FOR CX820, CX840, CX860, CX880 ONLY
3	84320085	2	PLATE, , FOR CX720, CX740, CX760, CX780 ONLY
4	451801	2	SEAL, , FOR CX820, CX840, CX860, CX880 ONLY
4	916005	2	CANVAS, , FOR CX720, CX740, CX760, CX780 ONLY
5	84320107	1	PLATE, , FOR CX820, CX840, CX860, CX880 ONLY
5	84320083	1	PLATE, , FOR CX720, CX740, CX760, CX780 ONLY
6	120100	2	BOLT, Hex, M6 x 20, 8.8,
7	86508568	8	SCREW, Hex, M6 x 16, 8.8,
8	445394	AR	RIVET, Pop, M4.8 x 12.7,
9	140182	AR	WASHER, M5 x 18 x 2,
10	435601	3	SEAL,
11	80445395	AR	RIVET,
12	84320089	2	STRIP, , FOR CX820, CX840, CX860, CX880 ONLY
12	84320081	2	STRIP, , FOR CX720, CX740, CX760, CX780 ONLY
13	451792	1	ELEMENT, SEALING, , FOR CX820, CX840, CX860, CX880 ONLY
13	442793	1	ELEMENT, SEALING, , FOR CX720, CX740, CX760, CX780 ONLY
14	120104	6	SCREW, Hex, M8 x 20, 8.8,
15	412650	9	WASHER, Belleville, M8,
16	425093	6	CLIP,
17	84320078	1	COVER,
18	84072176	1	HOUSING, , FOR CX820, CX840, CX860, CX880 ONLY
18	84072169	1	HOUSING, , FOR CX720, CX740, CX760, CX780 ONLY
19	84320082	1	STRIP,
20	84818418	1	SEAL,
21	86507486	3	BOLT, CARRIAGE, Short NK, M8 x 20, Cl8.8, Full Thd,
22	84072271	1	SUPPORT,
23	89706690	3	NUT, M8, Cl 8,
24	451794	1	ELEMENT, SEALING, , FOR CX820, CX840, CX860, CX880 ONLY
24	80428401	1	ELEMENT, SEALING, , FOR CX720, CX740, CX760, CX780 ONLY
25	140041	2	WASHER, M8 x 28 x 3,
26	323307	4	CLAMP,
27	9819720	2	PIN,
28	9819719	2	PIN,
29	84320087	1	COVER,
30	84078027	1	COVER, Return Tailings, STANDARD
30	740667	1	COVER, Return Tailings, PERFORATED (LONG HOLES)
30	84429238	1	COVER, Return Tailings, PERFORATED (ROUND HOLES)
31	84078026	1	COVER, Clean Grain, STANDARD
31	84078033	1	COVER, Clean Grain, REINFORCED
31	740666	1	COVER, Clean Grain, PERFORATED (LONG HOLES)
31	84429240	1	COVER, Clean Grain, PERFORATED (ROUND HOLES)

15.43(01) STRAW WALKER DRIVE

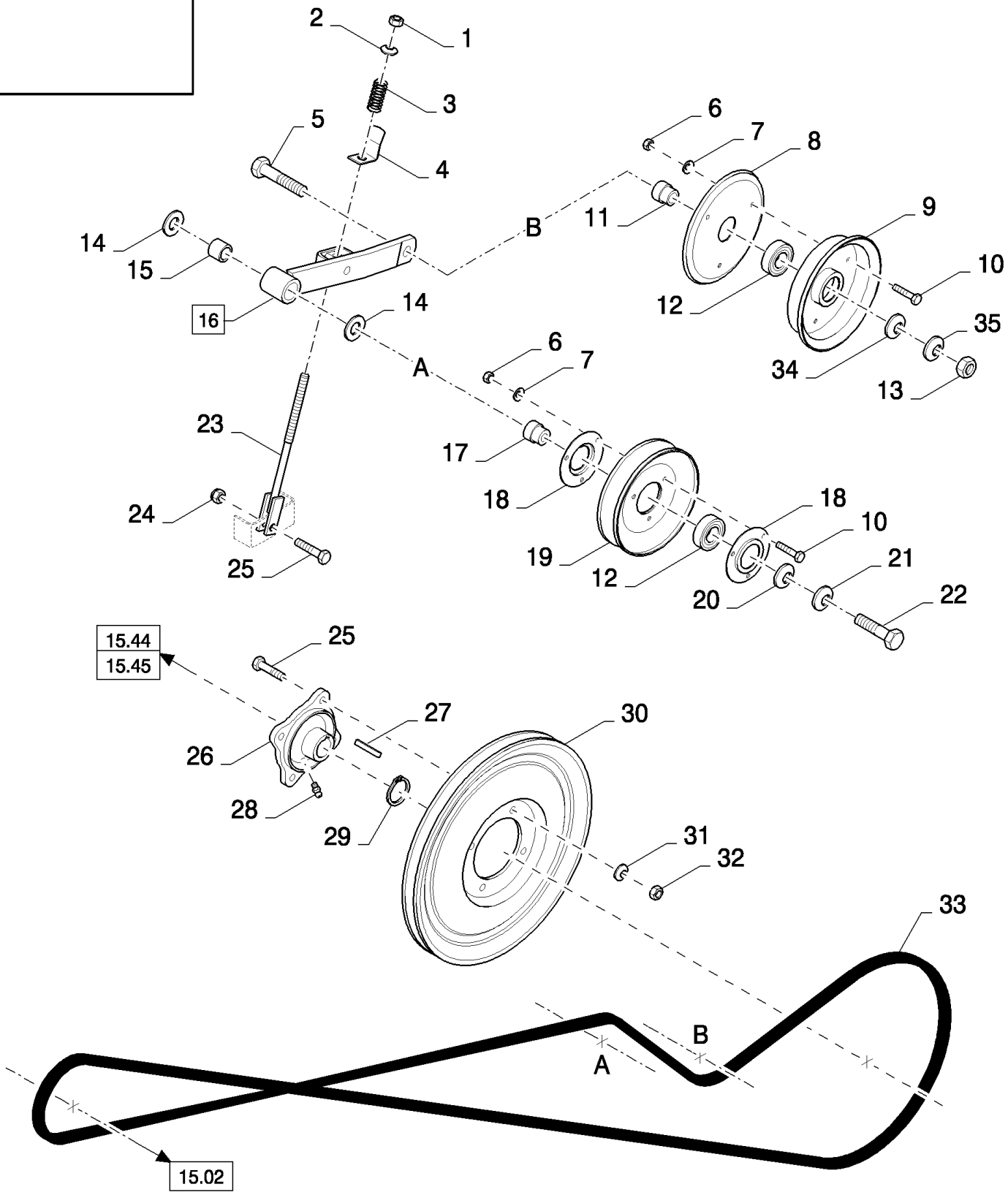

CX880 COMBINE - BASE UNIT (2/01-)

15.43(01) STRAW WALKER DRIVE

ссылка	Номер детали	Кол-во	Описание
1	412126	1	NUT, LOCK, M12 x 1.75, Cl 8,
2	378245	1	WASHER, M12,
3	84814906	1	SPRING,
4	84440525	1	INDICATOR, , BSN C309
4	84446655	1	INDICATOR, , ASN D310
5	120091	1	BOLT, Hex, M16 x 60, 8.8,
6	15896221	6	NUT, M6, Cl 10,
7	322357	6	WASHER, SPRING, Belleville, M6,
8	330737	1	HALF-PULLEY,
9	290119	1	HALF-PULLEY, , BSN C237
9	290122	1	HALF-PULLEY, , ASN D238
10	86508568	6	SCREW, Hex, M6 x 16, 8.8,
11	9515145	1	BUSHING,
12	443898	2	BEARING, BALL,
13	100020	1	NUT, M16, Cl 8,
14	419854	2	WASHER,
15	84057311	2	SLEEVE,
16	84072668	1	LEVER, (15)
17	84071951	1	BUSHING,
18	396806	2	FLANGE,
19	84077479	1	PULLEY,
20	543043	2	WASHER,
21	140046	2	WASHER, Belleville, M12,
22	9706702	1	SCREW, Hex, M12 x 50, 8.8,
23	455412	1	ROD, ADJUSTMENT,
24	100037	1	NUT, M10 x 1.5, Cl 8,
25	43140	5	BOLT, Hex, M10 x 30, 8.8, Full Thd,
26	84071889	1	FLANGE,
27	170010	1	KEY,
28	321204	1	NIPPLE, LUBE, M6 x 1, 16mm lg,
29	370003	1	RING, SNAP, M30, Ext,
30	84072006	1	PULLEY,
31	140045	4	WASHER, SPRING, Belleville, M10,
32	100016	4	NUT, M10, Cl 8,
33	84057482	1	BELT,
34	378246	1	WASHER, 16MM
35	140048	1	WASHER, SPRING, Belleville, M16,

15.44(01) STRAW WALKER SHAFTS BEARING

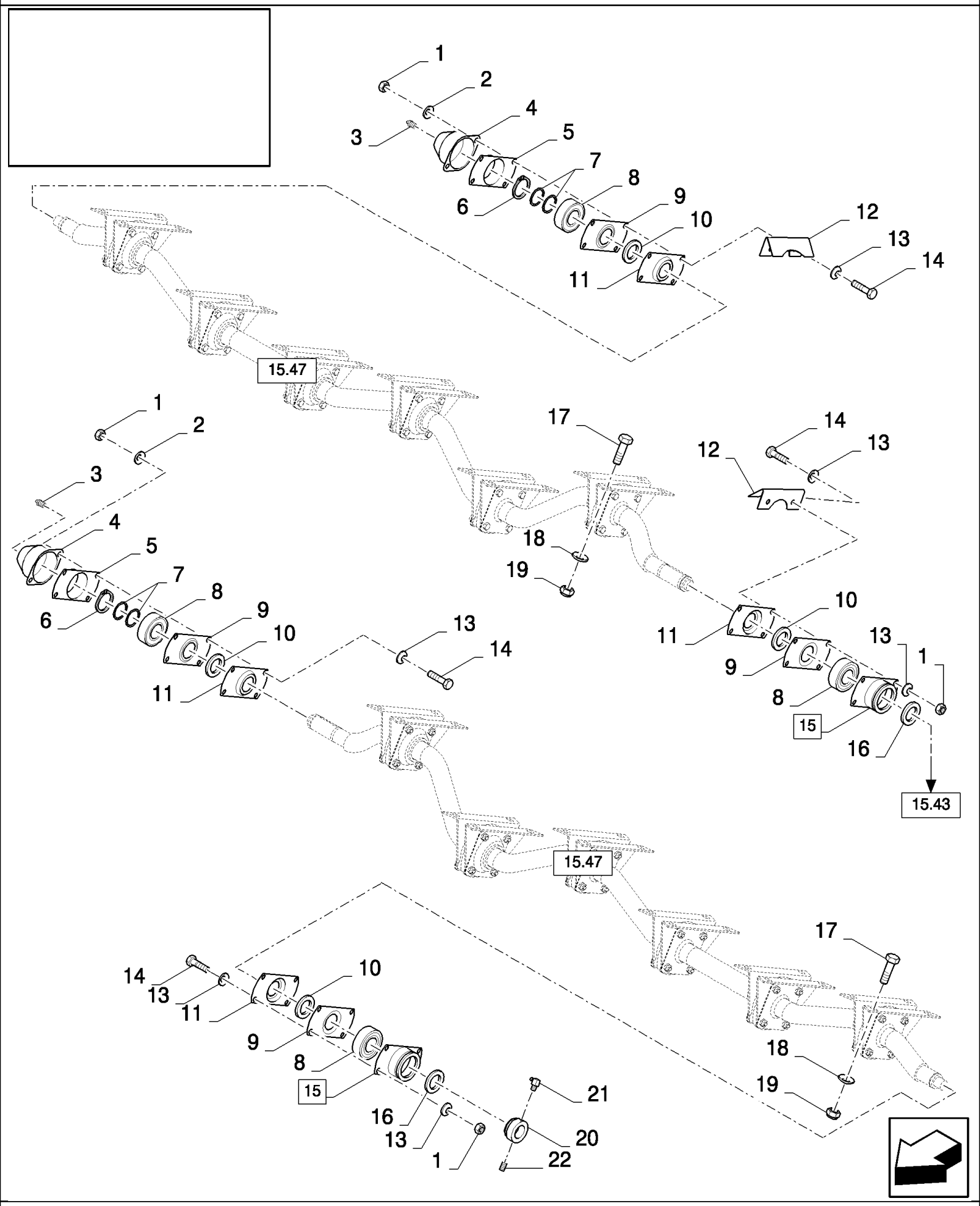

CX880 COMBINE - BASE UNIT (2/01-)

15.44(01) STRAW WALKER SHAFTS BEARING

ссылка	Номер детали	Кол-во	Описание
1	89706690	16	NUT, M8, Cl 8,
2	140160	8	WASHER, LOCK, Int T, M8
3	332038	2	NIPPLE, LUBE,
4	310067	2	COVER,
5	84435386	2	HOUSING, BEARING,
6	370003	2	RING, SNAP, M30, Ext,
7	140108	4	WASHER,
8	84071761	4	BEARING ASSY,
9	84072345	4	COVER, , BSN C427
9	84814927	4	COVER, , ASN D428
10	220061	4	GASKET,
11	310055	4	COVER,
12	84041119	2	PLATE, COVER,
13	322358	24	WASHER, SPRING, Belleville, M8,
14	120104	16	SCREW, Hex, M8 x 20, 8.8,
15	84435387	2	HOUSING, BEARING, (16)
16	220063	2	SEAL, FELT,
17	338949	AR	BOLT, CARRIAGE, Short NK, M10 x 25, Cl8.8, Full Thd,
18	394629	AR	WASHER, LOCK, 10MM
19	100037	AR	NUT, M10 x 1.5, Cl 8,
20	300014	1	COLLAR,
21	332040	1	NIPPLE, LUBE, 90є, 1/8" NPT x .84" lg,
22	300480	1	SET SCREW, Hex Soc, M10 x 12, Cup Pt,

15.46(01) STRAW WALKERS AND COVER PLATES

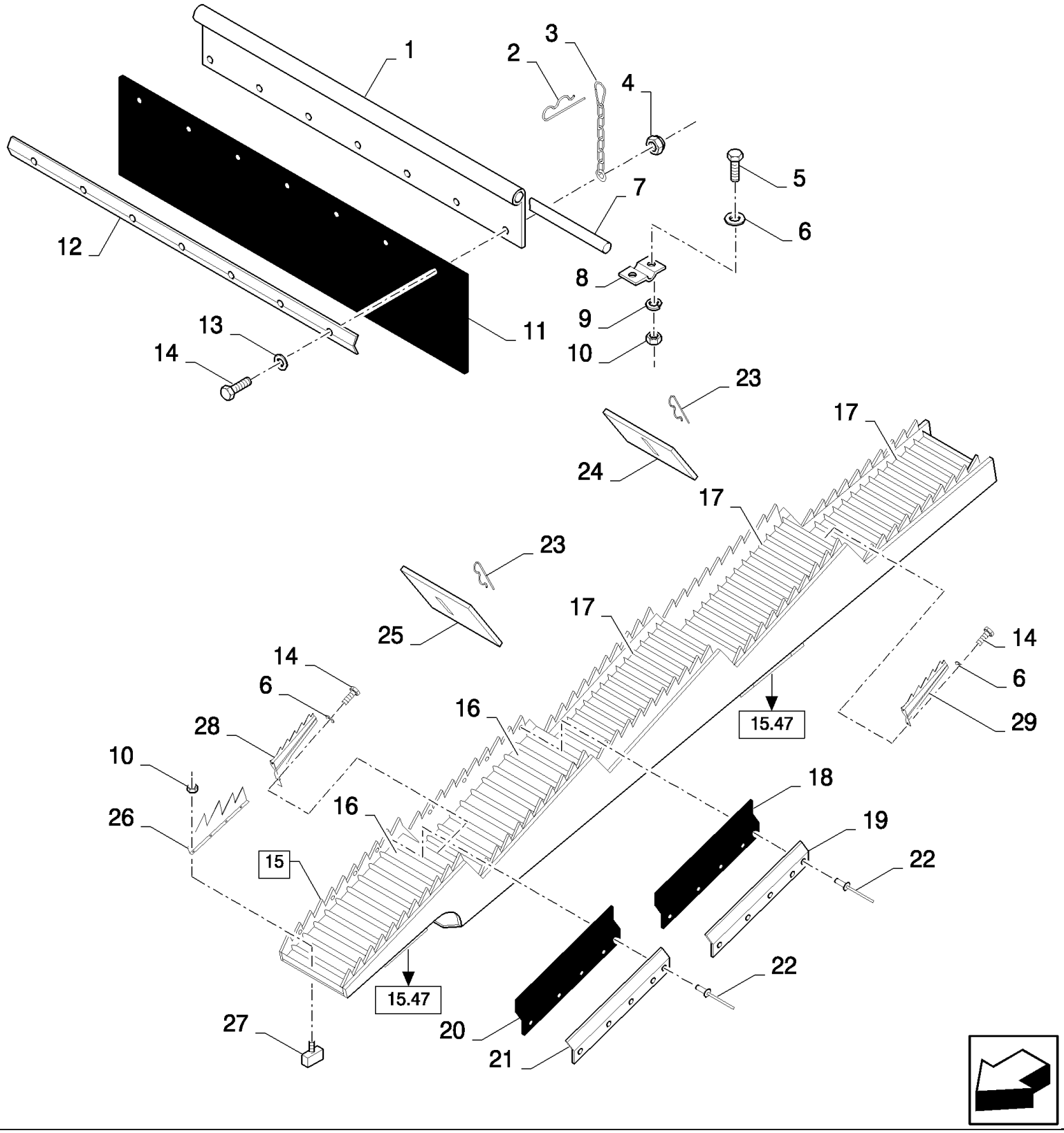

CX880 COMBINE - BASE UNIT (2/01-)

15.46(01) STRAW WALKERS AND COVER PLATES

ссылка	Номер детали	Кол-во	Описание
1	84058870	1	HINGE, , FOR CX820, CX840, CX860, CX880 ONLY, BSN C367
1	84453137	1	HINGE, , FOR CX820, CX840, CX860, CX880 ONLY, ASN D368
1	84058872	1	HINGE, , FOR CX720, CX740, CX760, CX780 ONLY, BSN C367
1	84453141	1	HINGE, , FOR CX720, CX740, CX760, CX780 ONLY, ASN D368
2	740591	1	PIN, SPLIT (COTTER),
3	84058873	1	CHAIN,
4	353308	7	NUT, M6 x 1, Cl 8,
5	86508568	4	SCREW, Hex, M6 x 16, 8.8,
6	412649	AR	WASHER, SPRING, Belleville, M6,
7	84058867	1	SHAFT, , FOR CX820, CX840, CX860, CX880 ONLY
7	84058866	1	SHAFT, , FOR CX720, CX740, CX760, CX780 ONLY
8	84058757	2	COLLAR, RETAINER,
9	322357	4	WASHER, SPRING, Belleville, M6,
10	15896221	AR	NUT, M6, Cl 10,
11	84058875	1	CANVAS, , FOR CX820, CX840, CX860, CX880 ONLY
11	84058874	1	CANVAS, , FOR CX720, CX740, CX760, CX780 ONLY
12	84058869	1	PLATE, FIXING, , FOR CX820, CX840, CX860, CX880 ONLY
12	84058868	1	PLATE, FIXING, , FOR CX720, CX740, CX760, CX780 ONLY
13	140040	7	WASHER, M6 x 22 x 2,
14	86508568	AR	SCREW, Hex, M6 x 16, 8.8,
14	86977786	AR	BOLT, Hex, M6 x 25, 8.8,
15	84069647	6	STRAW WALKER, (16,17), FOR CX820, CX840, CX860, CX880 ONLY, BSN C319
15	84446557	6	STRAW WALKER, (16,17), FOR CX820, CX840, CX860, CX880 ONLY, ASN D320
15	84069647	5	STRAW WALKER, (16,17), FOR CX720, CX740, CX760, CX780 ONLY, BSN C319
15	84446557	5	STRAW WALKER, (16,17), FOR CX720, CX740, CX760, CX780 ONLY, ASN D320
16	84056964	2	LINER, METAL,
17	84062225	3	LINER, METAL,
18	84434206	8	CANVAS,
19	84057552	8	PLATE, FIXING,
20	84434204	2	CANVAS,
21	84069434	2	PLATE, FIXING,
22	NS	2	NOT SERVICED, Rivet
23	86628570	AR	PIN, SPLIT (COTTER),
24	397862	6	PLATE, STEEL, , FOR CX820, CX840, CX860, CX880 ONLY
24	397862	5	PLATE, STEEL, , FOR CX720, CX740, CX760, CX780 ONLY
25	309623	18	COVER, , FOR CX820, CX840, CX860, CX880 ONLY
25	309623	15	COVER, , FOR CX720, CX740, CX760, CX780 ONLY
26	84447032	AR	RAKE,
27	353893	AR	CLAMP,
28	84446428	AR	RAKE,
29	84446407	AR	RAKE,

15.47(01) STRAW WALKER SHAFTS

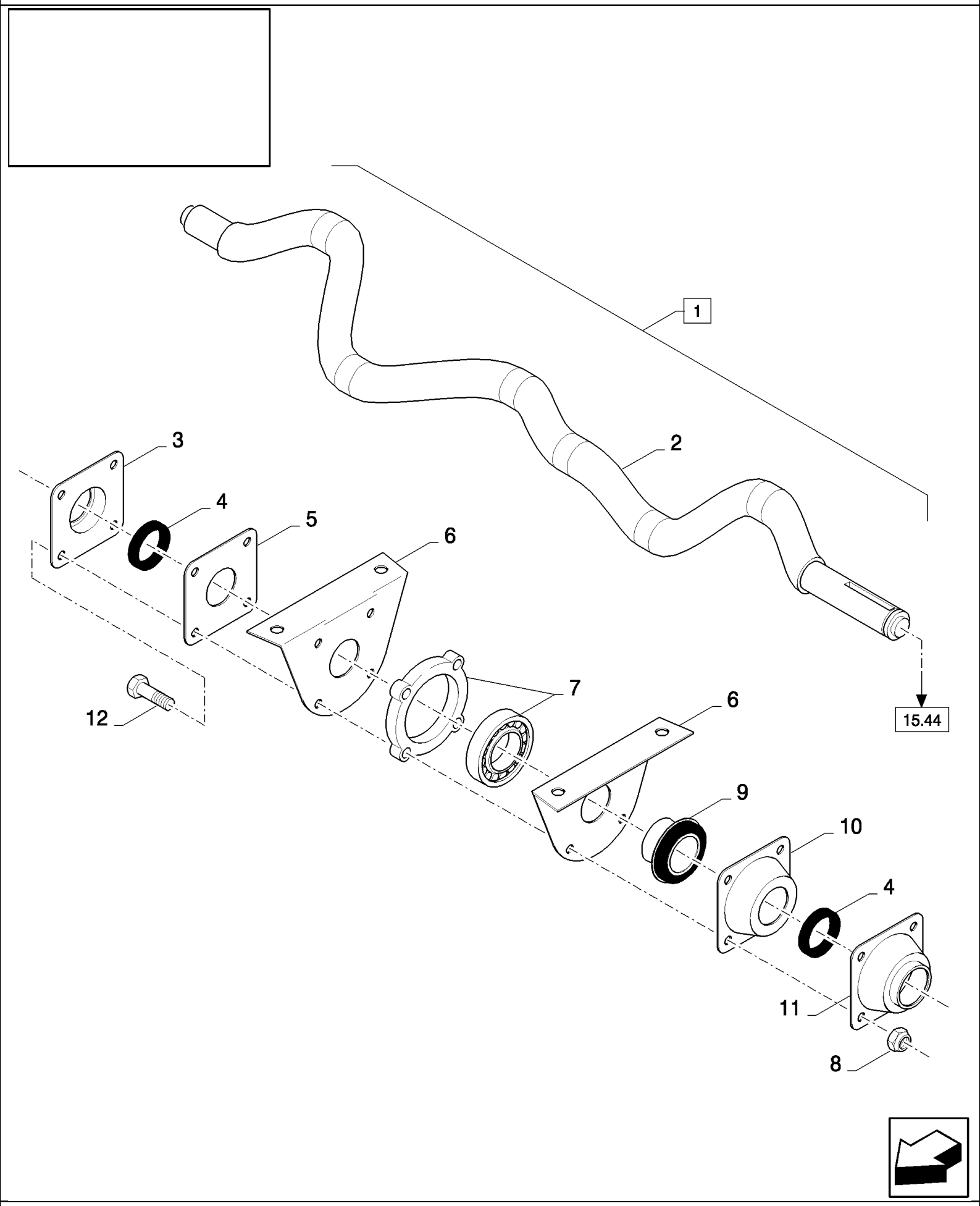

CX880 COMBINE - BASE UNIT (2/01-)

15.47(01) STRAW WALKER SHAFTS

ссылка	Номер детали	Кол-во	Описание
1	84072405	1	SHAFT, (2 to 13), FOR CX820, CX840, CX860, CX880 ONLY
1	84072644	1	SHAFT, (2 to 13), FOR CX720, CX740, CX760, CX780 ONLY, BSN C407
1	84454903	1	SHAFT, (2 to 13), FOR CX720, CX740, CX760, CX780 ONLY, ASN D408
2	84057292	1	SHAFT, , FOR CX820, CX840, CX860, CX880 ONLY
2	84069773	1	SHAFT, , FOR CX720, CX740, CX760, CX780 ONLY, BSN C407
2	84454612	1	SHAFT, , FOR CX720, CX740, CX760, CX780 ONLY, ASN D408
3	84072502	AR	FLANGE, , FOR CX820, CX840, CX860, CX880 ONLY
3	84072502	AR	FLANGE, , FOR CX720, CX740, CX760, CX780 ONLY, BSN C407
3	9850682	AR	FLANGE, , FOR CX720, CX740, CX760, CX780 ONLY, ASN D408
4	84057533	AR	RING, , FOR CX820, CX840, CX860, CX880 ONLY
4	84057533	AR	RING, , FOR CX720, CX740, CX760, CX780 ONLY, BSN C407
4	9850108	AR	RING, , FOR CX720, CX740, CX760, CX780 ONLY, ASN D408
5	84072504	AR	FLANGE, , FOR CX820, CX840, CX860, CX880 ONLY
5	84072504	AR	FLANGE, , FOR CX720, CX740, CX760, CX780 ONLY, BSN C407
5	9850679	AR	FLANGE, , FOR CX720, CX740, CX760, CX780 ONLY, ASN D408
6	421876	AR	PLATE,
7	396079	AR	BEARING ASSY, , FOR CX720, CX740, CX760, CX780 ONLY, BSN C415
7	84434854	AR	BEARING ASSY, , FOR CX720, CX740, CX760, CX780 ONLY, ASN D416
7	396079	AR	BEARING ASSY, , FOR CX820, CX840, CX860, CX880 ONLY, BSN C407
7	84434854	AR	BEARING ASSY, , FOR CX820, CX840, CX860, CX880 ONLY, ASN D408
8	86505664	AR	NUT,
9	84057563	AR	BUSHING, , FOR CX820, CX840, CX860, CX880 ONLY
9	84057563	AR	BUSHING, , FOR CX720, CX740, CX760, CX780 ONLY, BSN C407
9	306740	AR	WASHER, LOCK, , FOR CX720, CX740, CX760, CX780 ONLY, ASN D408
10	84072507	AR	FLANGE, , FOR CX820, CX840, CX860, CX880 ONLY
10	84072507	AR	FLANGE, , FOR CX720, CX740, CX760, CX780 ONLY, BSN C407
10	9850681	AR	COVER, , FOR CX720, CX740, CX760, CX780 ONLY, ASN D408
11	84072506	AR	FLANGE, , FOR CX820, CX840, CX860, CX880 ONLY
11	84072506	AR	FLANGE, , FOR CX720, CX740, CX760, CX780 ONLY, BSN C407
11	9850680	AR	FLANGE, , FOR CX720, CX740, CX760, CX780 ONLY, ASN D408
12	43129	AR	BOLT, Hex, M8 x 40, 8.8,

UNLOADING	**VIDANGE**	**DESCARGA**	**TØMME**
SCARICO	**ENTLEERUNG**	**DESCARGA**	**ONTLADING**

SEC. 16

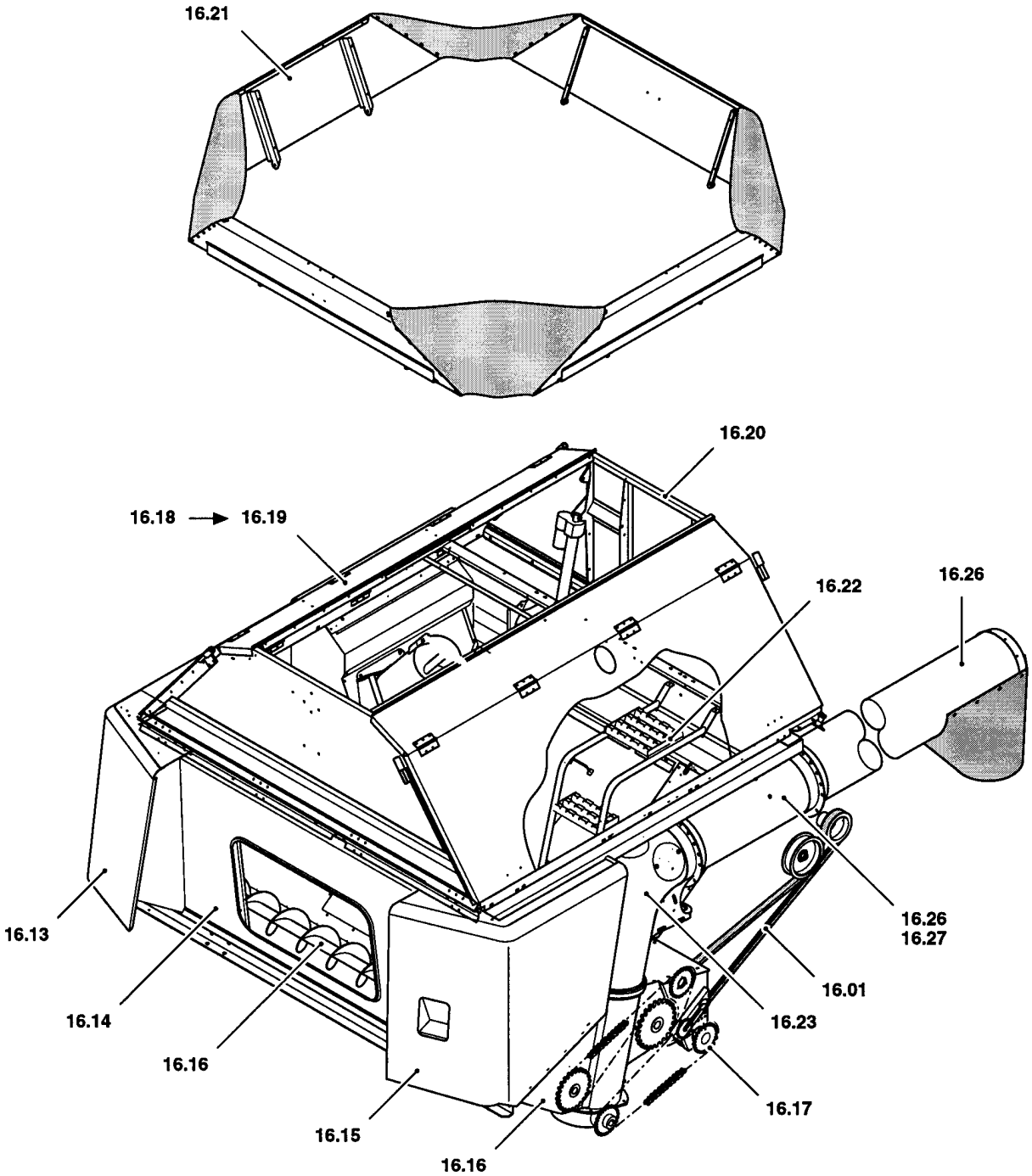

ссылка	Номер детали	Кол-во	Описание

UNLOADING	**VIDANGE**	**DESCARGA**	**TØMME**
SCARICO	**ENTLEERUNG**	**DESCARGA**	**ONTLADING**

SEC. 16

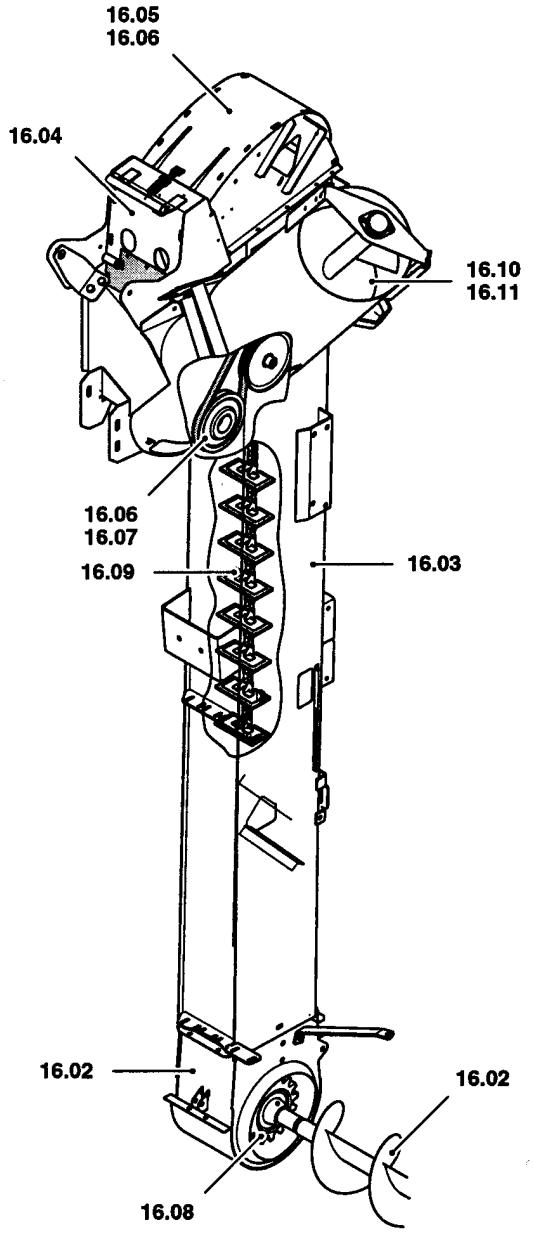

ссылка	Номер детали	Кол-во	Описание

16.01(01) UNLOADING AUGER

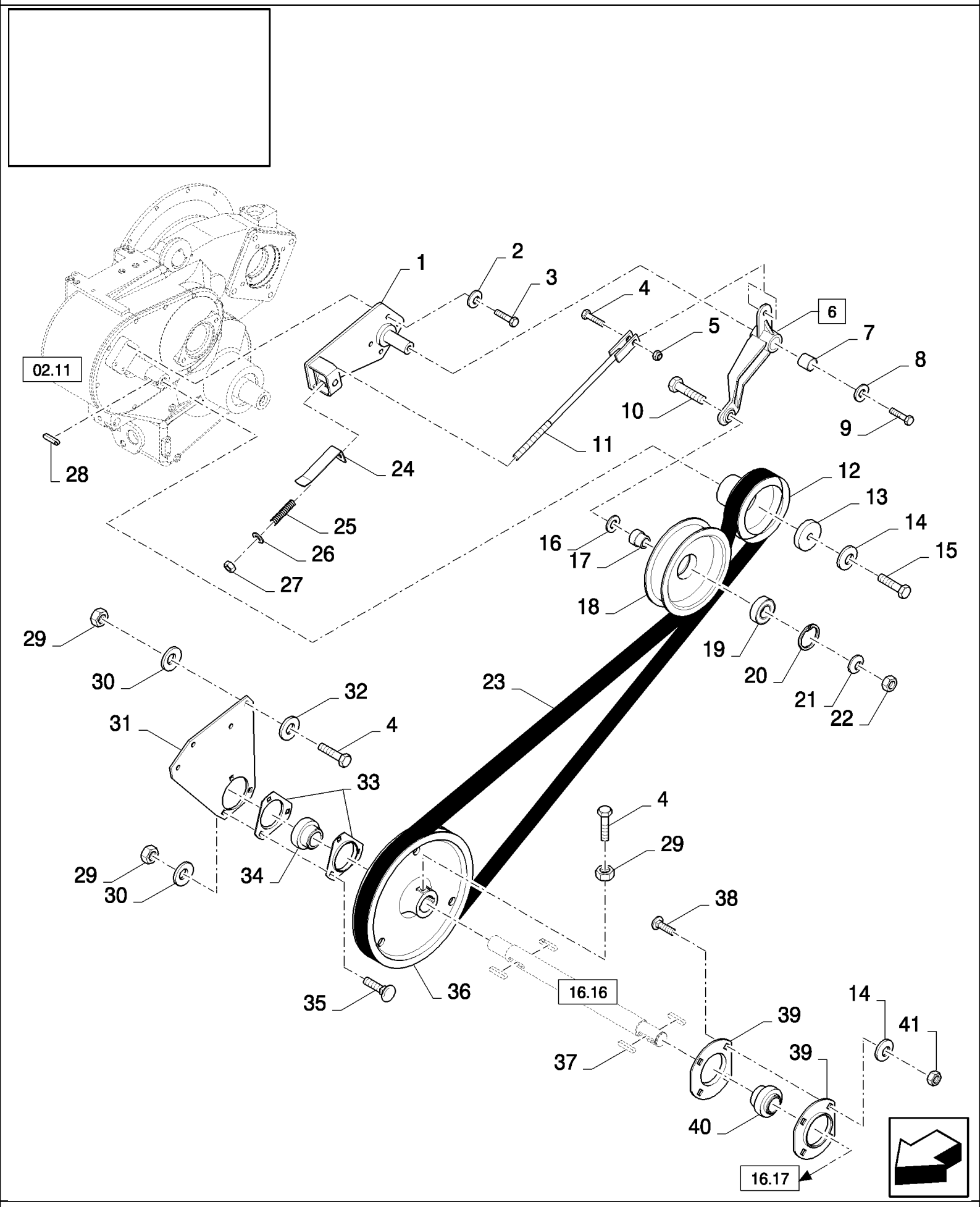

CX880 COMBINE - BASE UNIT (2/01-)

16.01(01) UNLOADING AUGER

ссылка	Номер детали	Кол-во	Описание
1	84069799	1	SUPPORT,
2	322358	4	WASHER, SPRING, Belleville, M8,
3	120104	4	SCREW, Hex, M8 x 20, 8.8,
4	43140	6	BOLT, Hex, M10 x 30, 8.8, Full Thd,
5	100037	1	NUT, M10 x 1.5, Cl 8,
6	86587356	1	ARM, (7)
7	84057311	2	SLEEVE,
8	140082	1	WASHER,
9	43138	1	SCREW, Hex, M10 x 20, 8.8, Full Thd,
10	120092	1	SCREW, Hex, M16 x 70, 8.8,
11	84073165	1	TIE-ROD,
12	86587033	1	PULLEY,
13	84073172	1	WASHER,
14	140046	5	WASHER, Belleville, M12,
15	9706702	1	SCREW, Hex, M12 x 50, 8.8,
16	378246	AR	WASHER, 16MM
17	9515145	1	BUSHING,
18	84071981	1	WHEEL, IDLER,
19	443898	1	BEARING, BALL,
20	370011	1	RING, SNAP, M52, Int,
21	140048	1	WASHER, SPRING, Belleville, M16,
22	100020	1	NUT, M16, Cl 8,
23	84061293	1	BELT, TRANSMISSION,
24	84072876	1	INDICATOR,
25	84814905	1	SPRING,
26	378245	1	WASHER, M12,
27	412126	1	NUT, LOCK, M12 x 1.75, Cl 8,
28	170066	1	KEY,
29	100016	8	NUT, M10, Cl 8,
30	140045	7	WASHER, SPRING, Belleville, M10,
31	84069655	1	PLATE,
32	140017	4	WASHER, M10 x 20 x 2,
33	410434	2	FLANGE,
34	212606	1	BEARING ASSY,
35	338949	3	BOLT, CARRIAGE, Short NK, M10 x 25, Cl8.8, Full Thd,
36	84072365	1	PULLEY,
37	170012	2	KEY,
38	120044	4	BOLT, CARRIAGE, Short NK, M12 x 30, Cl8.8, Full Thd,
39	9837215	2	FLANGE,
40	455805	1	BEARING, BALL,
41	9706685	4	NUT, M12, Cl 8,

16.02(01) GRAIN ELEVATOR, BOTTOM AUGER

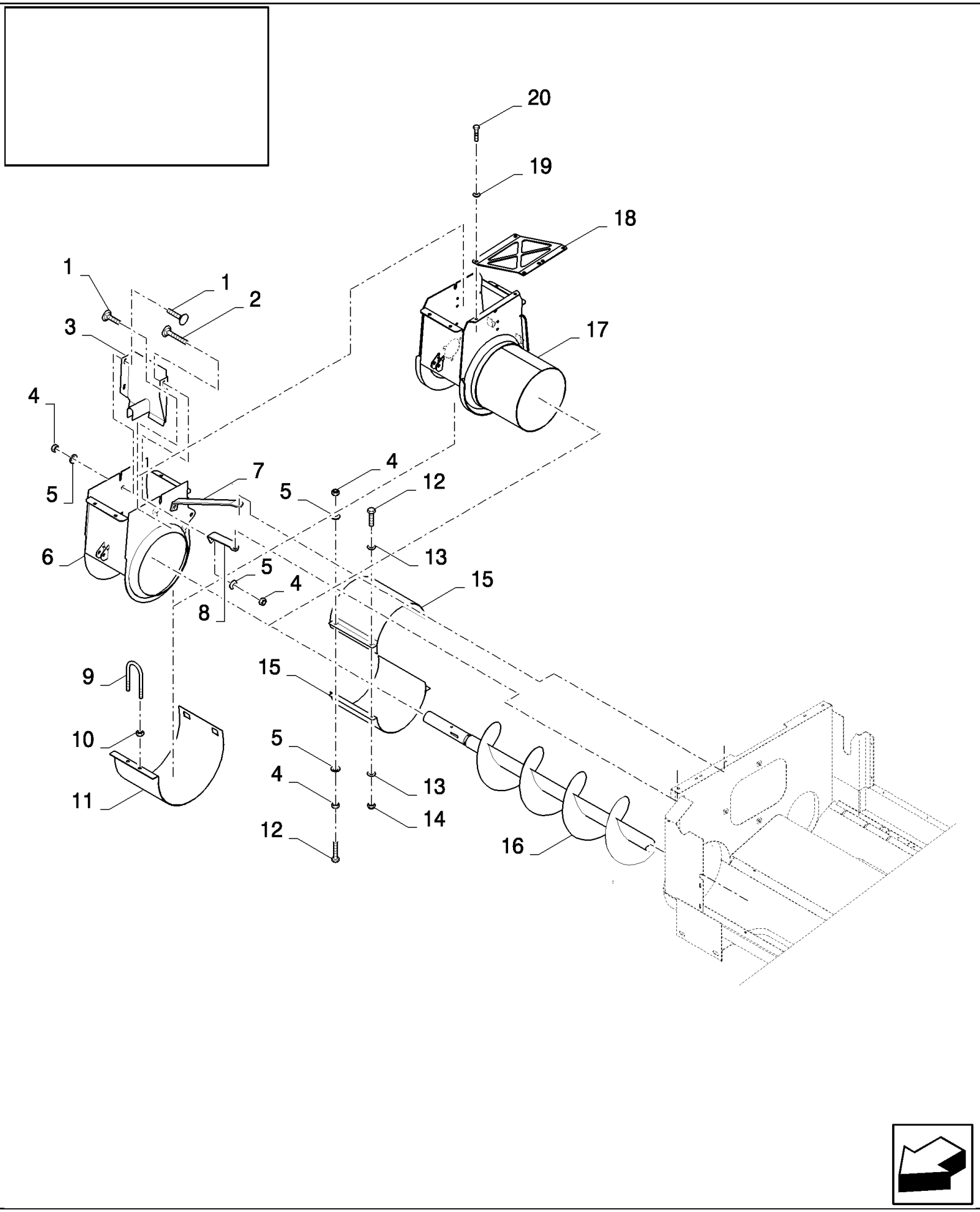

CX880 COMBINE - BASE UNIT (2/01-)

16.02(01) GRAIN ELEVATOR, BOTTOM AUGER

ссылка	Номер детали	Кол-во	Описание
1	86507486	3	BOLT, CARRIAGE, Short NK, M8 x 20, Cl8.8, Full Thd,
2	43465	1	BOLT, CARRIAGE, Short NK, M8 x 30, Cl8.8, Full Thd,
3	86580933	1	COVER,
4	89706690	8	NUT, M8, Cl 8,
5	322358	8	WASHER, SPRING, Belleville, M8,
6	86580938	1	BODY, , BSN C281
6	86974395	1	BODY, , BSN F282409
6	84433507	1	BODY, , REINFORCED, BSN C281
6	86974393	1	BODY, , REINFORCED, BSN F282409
7	84433331	1	SUPPORT, , FOR CX720, CX740, CX760, CX780 ONLY, BSN C409
7	84433327	1	SUPPORT, , FOR CX820, CX840, CX860, CX880 ONLY, BSN C409
7	84433321	1	SUPPORT, , FOR CX820, CX840, CX860 ONLY, FOR 3 M VERSION ONLY, BSN C409
8	84433325	1	SUPPORT, , FOR CX820, CX840, CX860, CX880 ONLY, BSN C409
8	84439127	1	SUPPORT, , FOR CX820, CX840, CX860, CX880 ONLY, ASN D410
8	84433329	1	SUPPORT, , FOR CX720, CX740, CX760, CX780 ONLY, BSN C409
8	84433323	1	SUPPORT, , FOR 3 M VERSION ONLY, FOR CX820, CX840, CX860 ONLY, BSN C409
9	84989315	1	U-BOLT, , BSN C409
10	86629542	2	NUT, LOCK, M8 x 1.25, Cl 8, , BSN C409
11	86580880	1	COVER, , BSN C409
11	84453602	1	COVER, , ASN D410
11	84457331	1	COVER, , REINFORCED, ASN D410
11	86580879	1	COVER, , PERFORATED (ROUND HOLES), BSN C407
11	84462632	1	COVER, , PERFORATED (ROUND HOLES), ASN D408
11	84989199	1	COVER, , PERFORATED (LONG HOLES), BSN C407
11	84462631	1	COVER, , PERFORATED (LONG HOLES), ASN D408
12	43129	AR	BOLT, Hex, M8 x 40, 8.8, , BSN C409
12	43130	AR	BOLT, Hex, M8 x 50, 8.8, , BSN C409
13	140016	4	WASHER, M8 x 16 x 1.6, , BSN C409
14	86629542	2	NUT, LOCK, M8 x 1.25, Cl 8, , BSN C409
14	86629542	2	NUT, LOCK, M8 x 1.25, Cl 8, , BSN C409
15	86580875	2	PLATE, ANTI-WRAP, , FOR CX820, CX840, CX860, CX880 ONLY, BSN C409
15	86597908	2	PLATE, ANTI-WRAP, , FOR CX720, CX740, CX760, CX780 ONLY, BSN C409
15	86580876	2	PLATE, ANTI-WRAP, , FOR CX820, CX840, CX860 ONLY, FOR 3 M VERSION ONLY, BSN C409
16	84100943	1	AUGER, , FOR CX820, CX840, CX860, CX880 ONLY, BSN C237
16	84440029	1	AUGER, , FOR CX820, CX840, CX860, CX880 ONLY, ASN D238
16	86580884	1	AUGER, , FOR CX720, CX740, CX760, CX780 ONLY, BSN C227
16	84440023	1	AUGER, , FOR CX720, CX740, CX760, CX780 ONLY, ASN D228
16	86580883	1	AUGER, , FOR CX820, CX840, CX860 ONLY, FOR 3 M VERSION ONLY, BSN C237
16	84440025	1	AUGER, , FOR CX820, CX840, CX860 ONLY, FOR 3 M VERSION ONLY, ASN D238
17	84455096	1	BODY, , FOR 3 M VERSION ONLY, FOR CX820, CX840, CX860 ONLY, ASN D410
17	84455100	1	SUPPORT, , FOR CX820, CX840, CX860 ONLY, FOR 3 M VERSION ONLY, REINFORCED, ASN D410
17	84453555	1	BODY, , FOR CX820, CX840, CX860, CX880 ONLY, ASN D410
17	84455051	1	BODY, , FOR CX820, CX840, CX860, CX880 ONLY, REINFORCED, ASN D410

16.02(01) GRAIN ELEVATOR, BOTTOM AUGER

ссылка	Номер детали	Кол-во	Описание
17	84455105	1	BODY, , FOR CX720, CX740, CX760, CX780 ONLY, ASN D410
17	84455106	1	BODY, , FOR CX720, CX740, CX760, CX780 ONLY, REINFORCED, ASN D410
18	84439872	1	SUPPORT, , FOR CX820, CX840, CX860, CX880 ONLY, ASN D410
18	84439874	1	SUPPORT, , FOR CX720, CX740, CX760, CX780 ONLY, ASN D410
19	322358	2	WASHER, SPRING, Belleville, M8, , ASN D410
20	16043224	2	BOLT, Hex, M8 x 16, 8.8, Full Thd, , ASN D410

16.03(01) GRAIN ELEVATOR

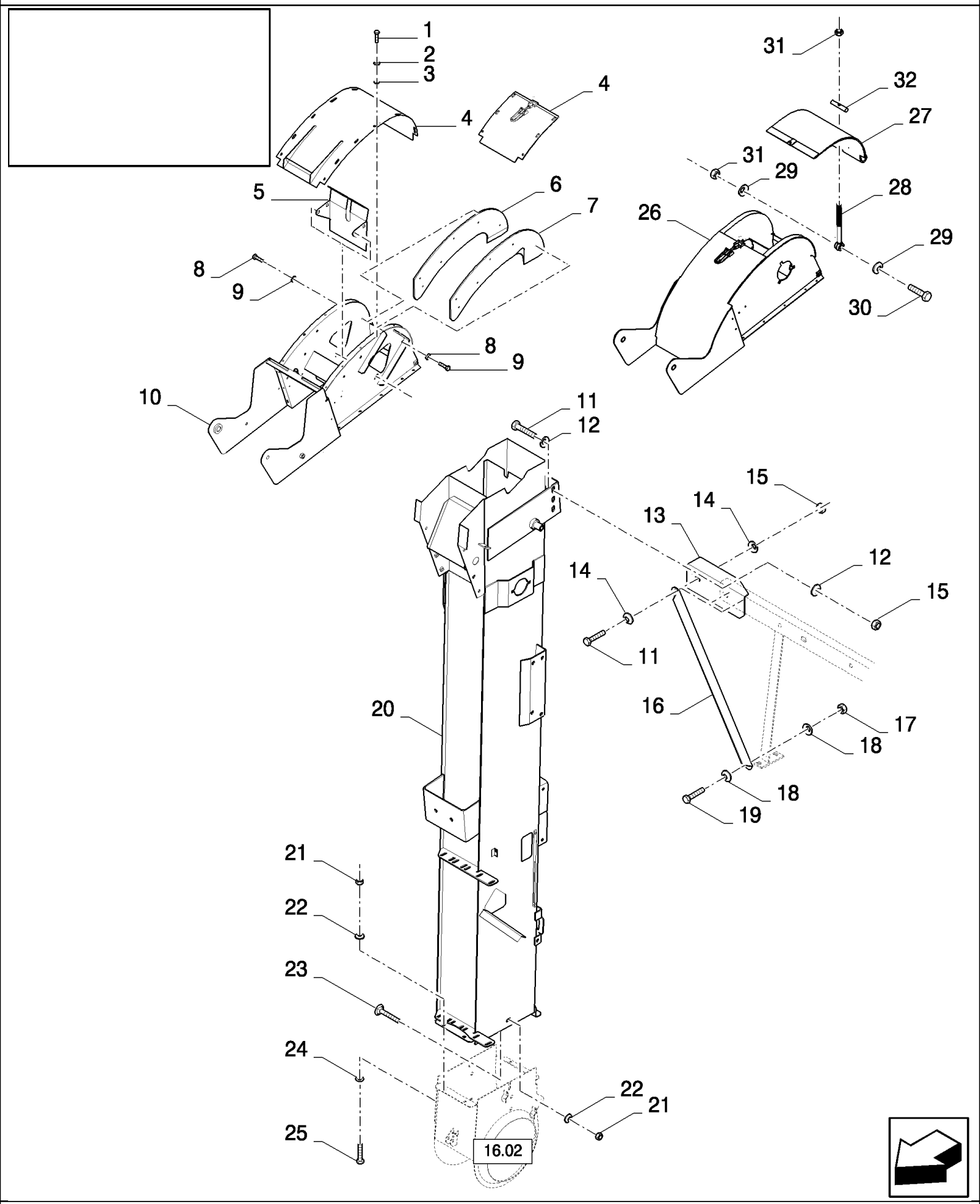

CX880 COMBINE - BASE UNIT (2/01-)

16.03(01) GRAIN ELEVATOR

ссылка	Номер детали	Кол-во	Описание
1	120100	14	BOLT, Hex, M6 x 20, 8.8,
2	322357	14	WASHER, SPRING, Belleville, M6,
3	140040	14	WASHER, M6 x 22 x 2,
4	84434428	1	PLATE, SKID, , BSN C271
4	84440076	7	PLATE, SKID, , BSN F272347
4	84441595	1	PLATE, END, With Latch, ASN D348
5	86595352	1	PLATE, , BSN C347
5	84444255	1	PLATE, , ASN D348
6	84334389	1	PLATE, WEAR,
6	84433502	1	PLATE, WEAR, , REINFORCED
7	84334387	1	PLATE, WEAR,
7	84433504	1	PLATE, WEAR, , REINFORCED
8	378056	8	BOLT, Hex, M6 x 10, 8.8, Full Thd,
9	412649	8	WASHER, SPRING, Belleville, M6,
10	86595348	1	FRAME, , BSN C271
10	84433564	1	FRAME, , REINFORCED, BSN C271
10	84441755	1	FRAME, , BSN F272347
10	84440194	1	FRAME, , ASN D348
11	9706687	4	SCREW, Hex, M12 x 30, 8.8,
12	86585939	4	WASHER, 12MM
13	84076995	1	SUPPORT, , FOR CX720, CX740, CX760, CX780 ONLY
13	84076991	1	SUPPORT, , FOR CX820, CX840, CX860, CX880 ONLY
13	84076994	1	SUPPORT, , FOR CX820, CX840, CX860 ONLY, FOR 3 M VERSION ONLY
14	140046	4	WASHER, Belleville, M12,
15	9706685	4	NUT, M12, Cl 8,
16	84077022	1	SUPPORT, , FOR CX720, CX740, CX760, CX780 ONLY
16	84077016	1	SUPPORT, , FOR CX820, CX840, CX860, CX880 ONLY
16	84077020	1	SUPPORT, , FOR 3 M VERSION ONLY, FOR CX820, CX840, CX860 ONLY
17	100020	1	NUT, M16, Cl 8,
18	140048	2	WASHER, SPRING, Belleville, M16,
19	43167	1	BOLT, Hex, M16 x 30, 8.8, Full Thd,
20	84435131	1	HOUSING, GRAIN ELEVATOR, , BSN C237
20	84439670	1	HOUSING, GRAIN ELEVATOR, , ASN D238
21	100016	6	NUT, M10, Cl 8,
22	140045	6	WASHER, SPRING, Belleville, M10,
23	86512446	2	BOLT, CARRIAGE, Short NK, M10 x 30, Cl8.8, Full Thd,
24	140017	4	WASHER, M10 x 20 x 2,
25	43138	4	SCREW, Hex, M10 x 20, 8.8, Full Thd,
26	84439421	1	FRAME, , WITHOUT GRAIN FLOW SENSOR
27	84439403	1	PLATE, WEAR, , WITHOUT GRAIN FLOW SENSOR
27	84439695	1	PLATE, WEAR, , STANDARD
27	84441213	1	PLATE, WEAR, , REINFORCED, ASN D348
28	9811378	1	U-BOLT, , WITHOUT GRAIN FLOW SENSOR
28	9811378	1	U-BOLT, , ASN D348

ссылка	Номер детали	Кол-во	Описание
29	322358	2	WASHER, SPRING, Belleville, M8, , WITHOUT GRAIN FLOW SENSOR
30	43129	1	BOLT, Hex, M8 x 40, 8.8, , WITHOUT GRAIN FLOW SENSOR
31	89706690	2	NUT, M8, Cl 8, , WITHOUT GRAIN FLOW SENSOR
31	89706690	2	NUT, M8, Cl 8, , ASN D348
32	9811398	1	ROD, , WITHOUT GRAIN FLOW SENSOR
32	9811398	1	ROD, , ASN D348

16.04(01) GRAIN ELEVATOR

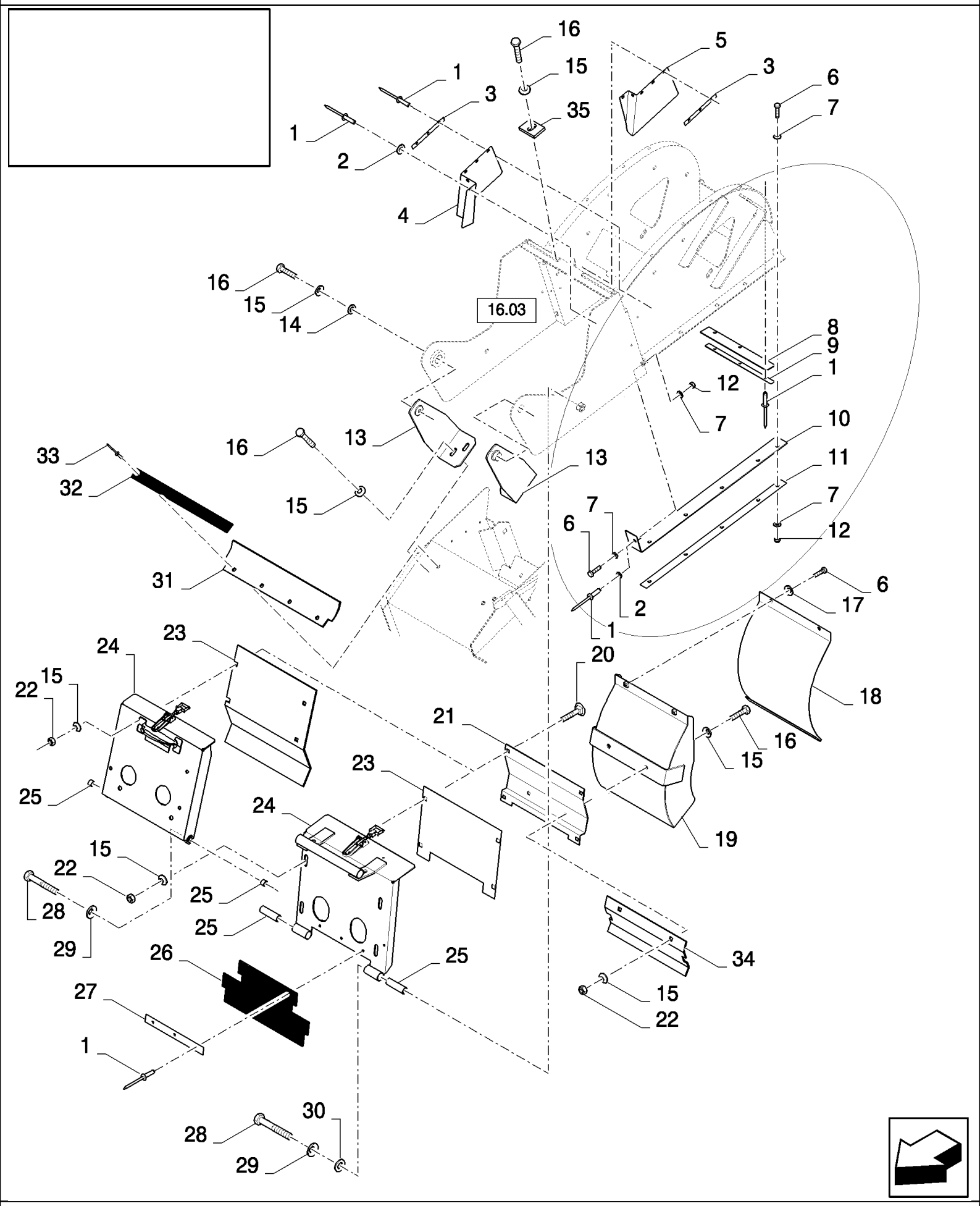

CX880 COMBINE - BASE UNIT (2/01-)

16.04(01) GRAIN ELEVATOR

ссылка	Номер детали	Кол-во	Описание
1	425522	AR	RIVET,
2	140182	6	WASHER, M5 x 18 x 2,
3	84432854	2	PLATE, FIXING,
4	84432852	1	CANVAS,
5	84432850	1	CANVAS,
6	86508568	AR	SCREW, Hex, M6 x 16, 8.8, , BSN C271
7	86588450	24	WASHER, M6, , BSN C271
8	84432720	1	CANVAS,
9	84432722	1	PLATE, FIXING,
10	84054543	2	CANVAS,
11	84077368	2	PLATE, FIXING, , BSN C271
11	84439572	2	PLATE, FIXING, , ASN D272
12	353308	12	NUT, M6 x 1, Cl 8, , BSN C271
13	84434415	2	BRACKET,
13	84439549	2	SUPPORT, , WITHOUT GRAIN FLOW SENSOR
14	140041	2	WASHER, M8 x 28 x 3,
15	322358	AR	WASHER, SPRING, Belleville, M8,
16	120104	AR	SCREW, Hex, M8 x 20, 8.8,
17	322357	2	WASHER, SPRING, Belleville, M6,
18	84441281	1	PLATE, SKID,
19	84441733	1	PLATE, SKID, , BSN C347
19	84446257	1	PLATE, SKID, , ASN D347
20	86507486	4	BOLT, CARRIAGE, Short NK, M8 x 20, Cl8.8, Full Thd,
21	84989390	1	SUPPORT, , BSN C237
22	89706690	AR	NUT, M8, Cl 8,
23	84434673	1	COVER, , BSN C237
23	84438895	1	COVER, , BSN F238281
23	84444799	1	PLATE, , BSN F282347
23	84446326	1	PLATE, , BSN F348363
23	84453503	1	PLATE, , ASN D364
24	84076934	1	COVER, , BSN C347
24	84441610	1	COVER, , ASN D348
25	84334215	2	BUSHING, , BSN C347
25	84441596	2	BUSHING, , ASN D348
26	84077295	1	CANVAS, , BSN C347
27	84431309	1	PLATE, FIXING, , BSN C347
28	9706717	2	BOLT, Hex, M12 x 70, 8.8, Full Thd, Hex, M12 x 70, 8.8, Full Thd
29	140046	2	WASHER, Belleville, M12,
30	86511324	2	WASHER, M12 x 24 x 2.5,
31	84439557	1	PLATE, FIXING, , WITHOUT GRAIN FLOW SENSOR
32	84439555	1	CANVAS, , WITHOUT GRAIN FLOW SENSOR
33	425522	AR	RIVET, , WITHOUT GRAIN FLOW SENSOR
34	84446221	1	PLATE, , ASN D348
35	84441686	2	PLATE, ADJUSTING, , ASN D348

16.05(01) "BUBBLE-UP" DRIVE

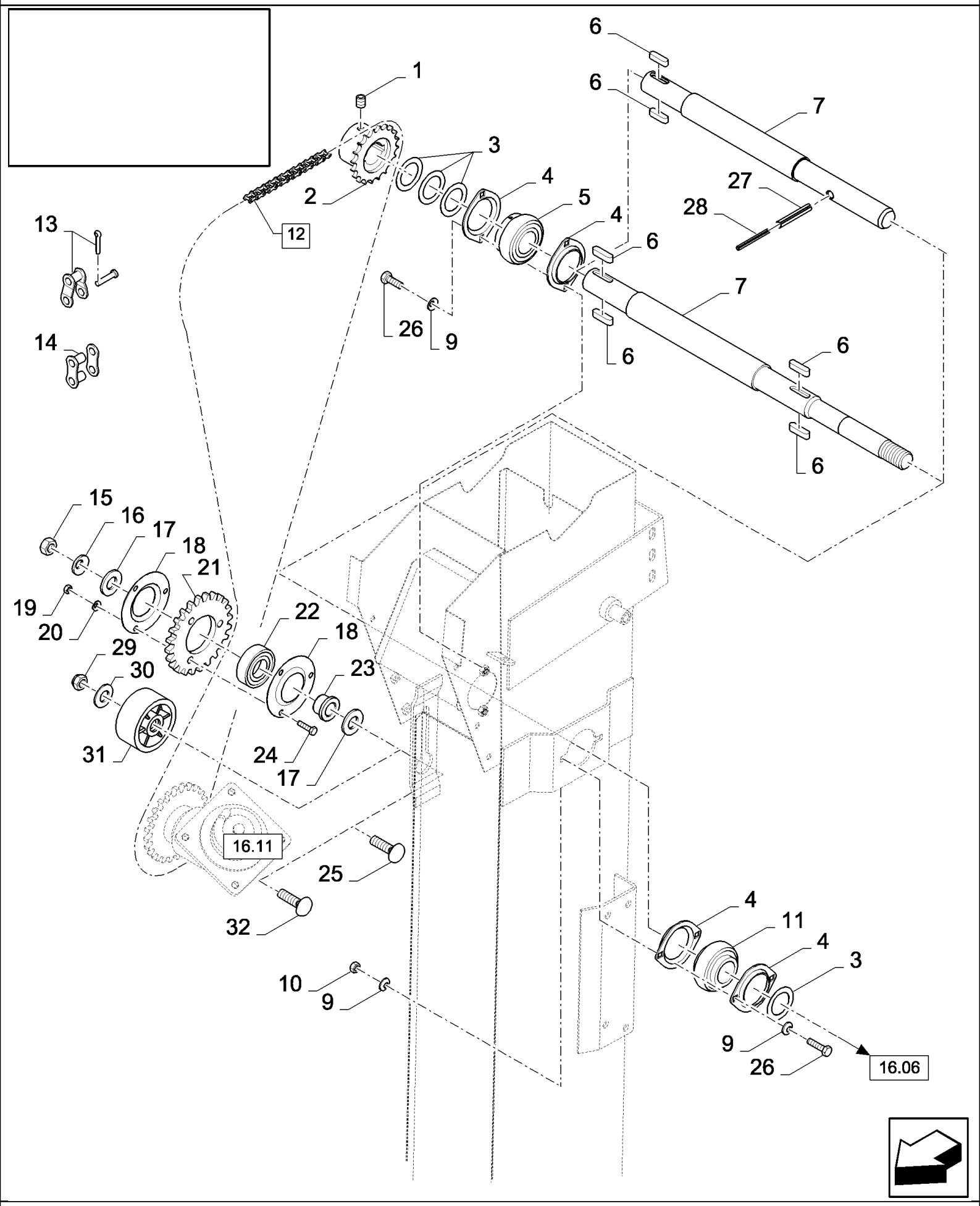

CX880 COMBINE - BASE UNIT (2/01-)

16.05(01) "BUBBLE-UP" DRIVE

ссылка	Номер детали	Кол-во	Описание
1	300476	1	SET SCREW, Hex Soc, M8 x 12 Cup Pt,
2	84075110	1	SPROCKET, DRIVEN,
3	441176	AR	WASHER,
4	165385	4	FLANGE, , BSN C347
4	87106572	4	FLANGE, , ASN D348
5	325106	1	BEARING ASSY,
6	170030	4	KEY, M8 x 7 x 32, Par, , BSN C347
6	170030	2	KEY, M8 x 7 x 32, Par, , ASN D348
7	84061642	1	SHAFT, , BSN C237
7	84439674	1	SHAFT, , BSN F238347
7	84440288	1	SHAFT, , ASN D348
8	100016	4	NUT, M10, Cl 8,
9	140045	6	WASHER, SPRING, Belleville, M10,
10	100037	2	NUT, M10 x 1.5, Cl 8,
11	84019208	1	BEARING ASSY, , BSN C347
11	84069440	1	BEARING, BALL, , ASN D348
12	84431346	1	CHAIN, (13,14)
13	25194	AR	LINK, CONNECTING,
14	86595276	AR	LINK, OFFSET,
15	100020	1	NUT, M16, Cl 8,
16	140048	1	WASHER, SPRING, Belleville, M16,
17	378246	1	WASHER, 16MM, BSN C347
17	337522	1	WASHER, M16 x 56 x 5, , BSN F348427
18	310146	2	FLANGE, , BSN C347
19	15896221	3	NUT, M6, Cl 10,
20	322357	3	WASHER, SPRING, Belleville, M6,
21	84434009	1	SPROCKET, DRIVEN, 20 T, BSN C347
21	84437219	1	SPROCKET, DRIVEN, 17 T, BSN F348427
22	443898	1	BEARING, BALL, , BSN C347
23	84334697	1	BUSHING, , BSN C347
24	120100	3	BOLT, Hex, M6 x 20, 8.8, , BSN C347
25	412185	1	BOLT, CARRIAGE, Short NK, M16 x 50, Cl8.8, Full Thd, , BSN C427
26	43139	4	SCREW, Hex, M10 x 25, 8.8, Full Thd, M10x25
27	62218	1	PIN, LOCK, M10 x 75, Slotted, , ASN D348
28	412050	1	PIN, LOCK, M6 x 75, Slotted, , ASN D348
29	412126	1	NUT, LOCK, M12 x 1.75, Cl 8, , ASN D428
30	378245	1	WASHER, M12, , ASN D428
31	334970	1	PINION, IDLER, , ASN D428
32	334682	1	BOLT, CARRIAGE, Short NK, M12 x 50, Cl8.8, Full Thd, , ASN D428

16.06(01) GRAIN ELEVATOR DRIVE

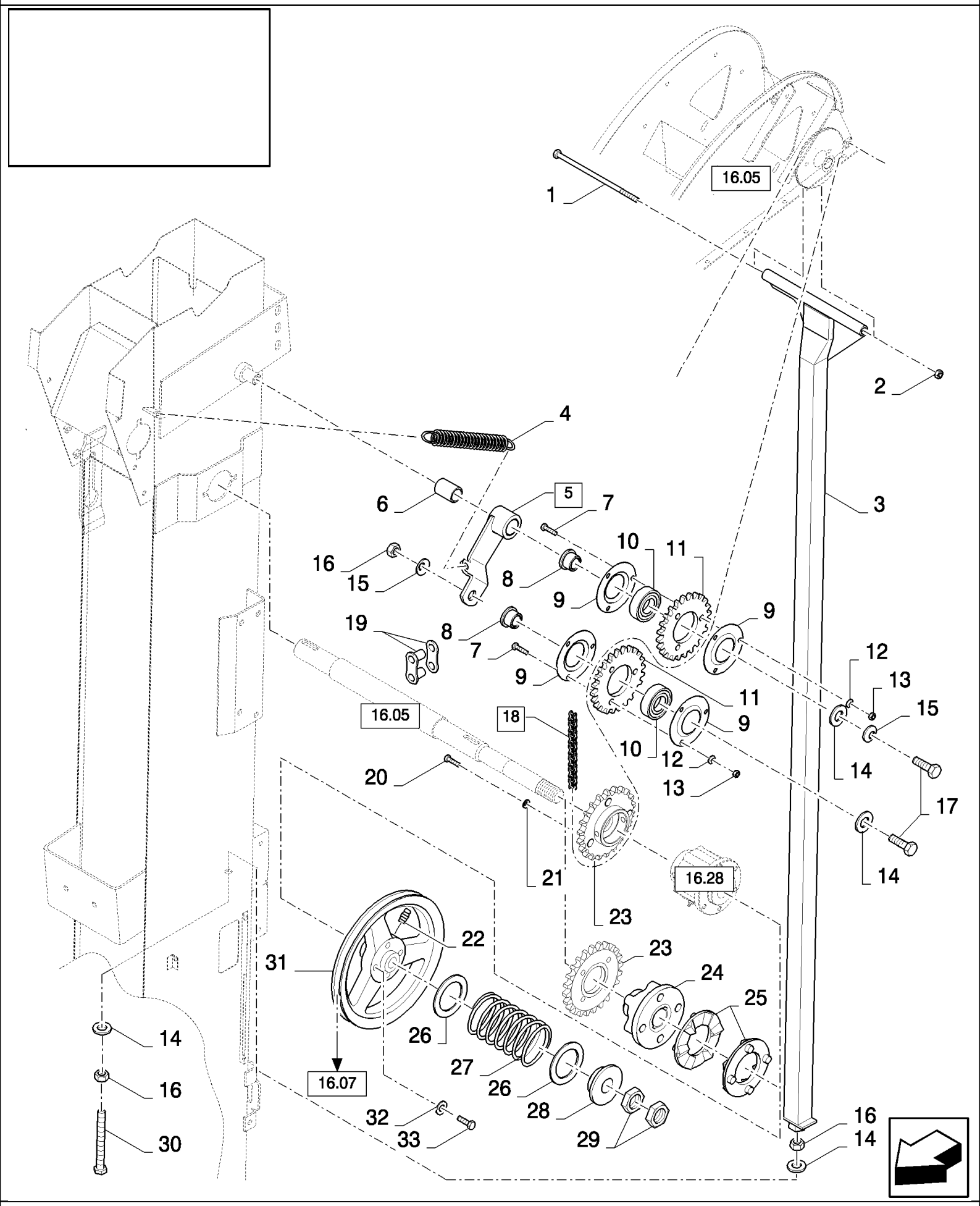

CX880 COMBINE - BASE UNIT (2/01-)

16.06(01) GRAIN ELEVATOR DRIVE

ссылка	Номер детали	Кол-во	Описание
1	412004	1	BOLT, Hex, M10 x 260, 8.8, M10x260
2	100016	1	NUT, M10, Cl 8,
3	84077838	1	SUPPORT, , BSN C347
3	84446556	1	SUPPORT, , ASN D348
4	180039	1	SPRING,
5	86595376	1	ARM, (6), BSN C347
4	84444691	1	ARM, , ASN D348
6	80395589	AR	SLEEVE,
7	120100	6	BOLT, Hex, M6 x 20, 8.8,
8	84334697	2	BUSHING,
9	310146	4	FLANGE, , BSN C347
10	443898	2	BEARING, BALL, , BSN C347
11	84434009	2	SPROCKET, DRIVEN, , BSN C347
11	84980926	2	SPROCKET, , ASN D348
12	322357	6	WASHER, SPRING, Belleville, M6,
13	15896221	6	NUT, M6, Cl 10,
14	378246	4	WASHER, 16MM
15	140048	2	WASHER, SPRING, Belleville, M16,
16	100020	3	NUT, M16, Cl 8,
17	43168	2	BOLT, Hex, M16 x 40, 8.8, , BSN C347
17	385922	2	SCREW, Hex, M16 x 45, 8.8, , ASN D348
18	84431347	1	CHAIN, (19), BSN C347
18	84443831	1	CHAIN, (19), ASN D348
19	25194	AR	LINK, CONNECTING, , BSN C347
19	165590	2	LINK, CONNECTING, , ASN D348
20	120104	4	SCREW, Hex, M8 x 20, 8.8,
21	322358	4	WASHER, SPRING, Belleville, M8,
22	321204	1	NIPPLE, LUBE, M6 x 1, 16mm lg, , BSN C347
23	84075111	1	SPROCKET, DRIVEN, , BSN C347
23	84441122	1	SPROCKET, DRIVEN, , ASN D348
24	84073564	1	HUB, , BSN C347
25	394363	2	CLUTCH, , BSN C347
26	84061628	2	RING, , BSN C347
27	84435051	1	SPRING, , BSN C347
28	84075170	1	BUSHING, , BSN C347
29	100033	2	NUT, Thin, M24 x 1.5, Cl 04, , BSN C237
29	100024	2	NUT, M24 x 1.5, Cl 8, , BSN F238347
30	359211	1	BOLT, Hex, M16 x 150, 8.8, Full Thd, M16x150
31	84072364	1	PULLEY, , FOR CX820, CX840, CX860, CX880 ONLY, BSN C237
31	84437904	1	PULLEY, , FOR CX820, CX840, CX860, CX880 ONLY, BSN F238347
31	84442223	1	PULLEY, , FOR CX820, CX840, CX860, CX880 ONLY, ASN D348
31	84442255	1	PULLEY, , FOR CX820, CX840, CX860 ONLY, FOR 3 M VERSION ONLY, ASN D348
31	84989472	1	PULLEY, , FOR CX720, CX740, CX760, CX780 ONLY, BSN C237
31	84438505	1	PULLEY, , FOR CX720, CX740, CX760, CX780 ONLY, BSN F238347

16.06(01) GRAIN ELEVATOR DRIVE

ссылка	Номер детали	Кол-во	Описание
31	84442223	1	PULLEY, , FOR CX720, CX740, CX760, CX780 ONLY, ASN D348
32	322358	6	WASHER, SPRING, Belleville, M8, , ASN D348
33	43127	6	BOLT, Hex, M8 x 25, 8.8, , ASN D348

16.07(01) GRAIN ELEVATOR , DRIVE

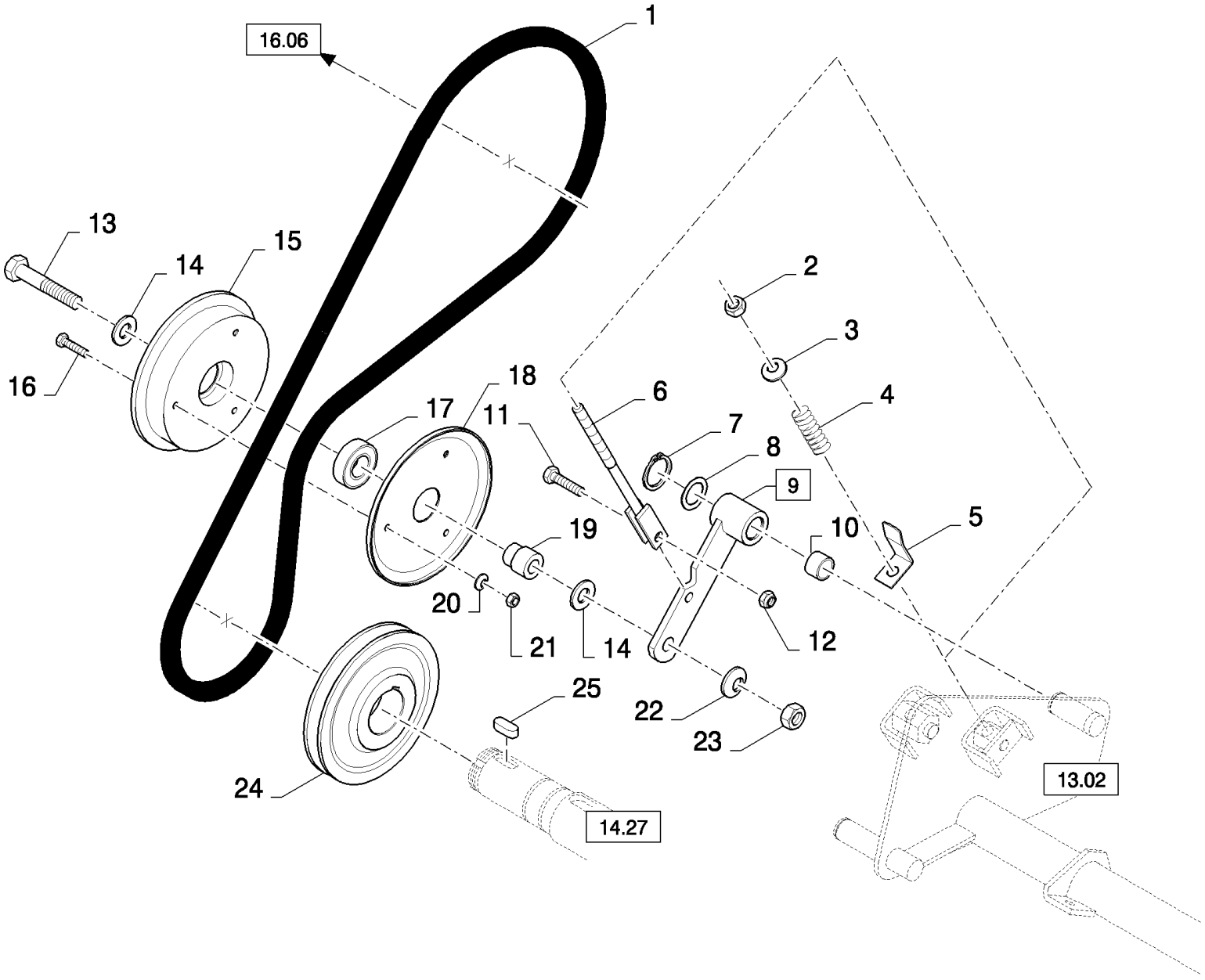

CX880 COMBINE - BASE UNIT (2/01-)

16.07(01) GRAIN ELEVATOR , DRIVE

ссылка	Номер детали	Кол-во	Описание
1	84073457	1	BELT, TRANSMISSION,
2	412126	1	NUT, LOCK, M12 x 1.75, Cl 8,
3	378245	1	WASHER, M12,
4	84814906	1	SPRING,
5	84073601	1	INDICATOR,
6	455412	1	ROD, ADJUSTMENT,
7	370002	1	RING, SNAP, M25, Ext,
8	140103	1	WASHER,
9	84073722	1	LEVER, (10)
10	84057311	2	SLEEVE,
11	43140	1	BOLT, Hex, M10 x 30, 8.8, Full Thd,
12	100037	1	NUT, M10 x 1.5, Cl 8,
13	120092	1	SCREW, Hex, M16 x 70, 8.8,
14	378246	2	WASHER, 16MM
15	290122	1	HALF-PULLEY,
16	86508568	3	SCREW, Hex, M6 x 16, 8.8,
17	443898	1	BEARING, BALL,
18	290119	1	HALF-PULLEY,
19	84075176	1	SPACER,
20	322357	3	WASHER, SPRING, Belleville, M6,
21	15896221	3	NUT, M6, Cl 10,
22	140048	1	WASHER, SPRING, Belleville, M16,
23	100020	1	NUT, M16, Cl 8,
24	84075140	1	PULLEY,
25	170015	1	KEY,

16.08(01) GRAIN ELEVATOR CHAIN DRIVE

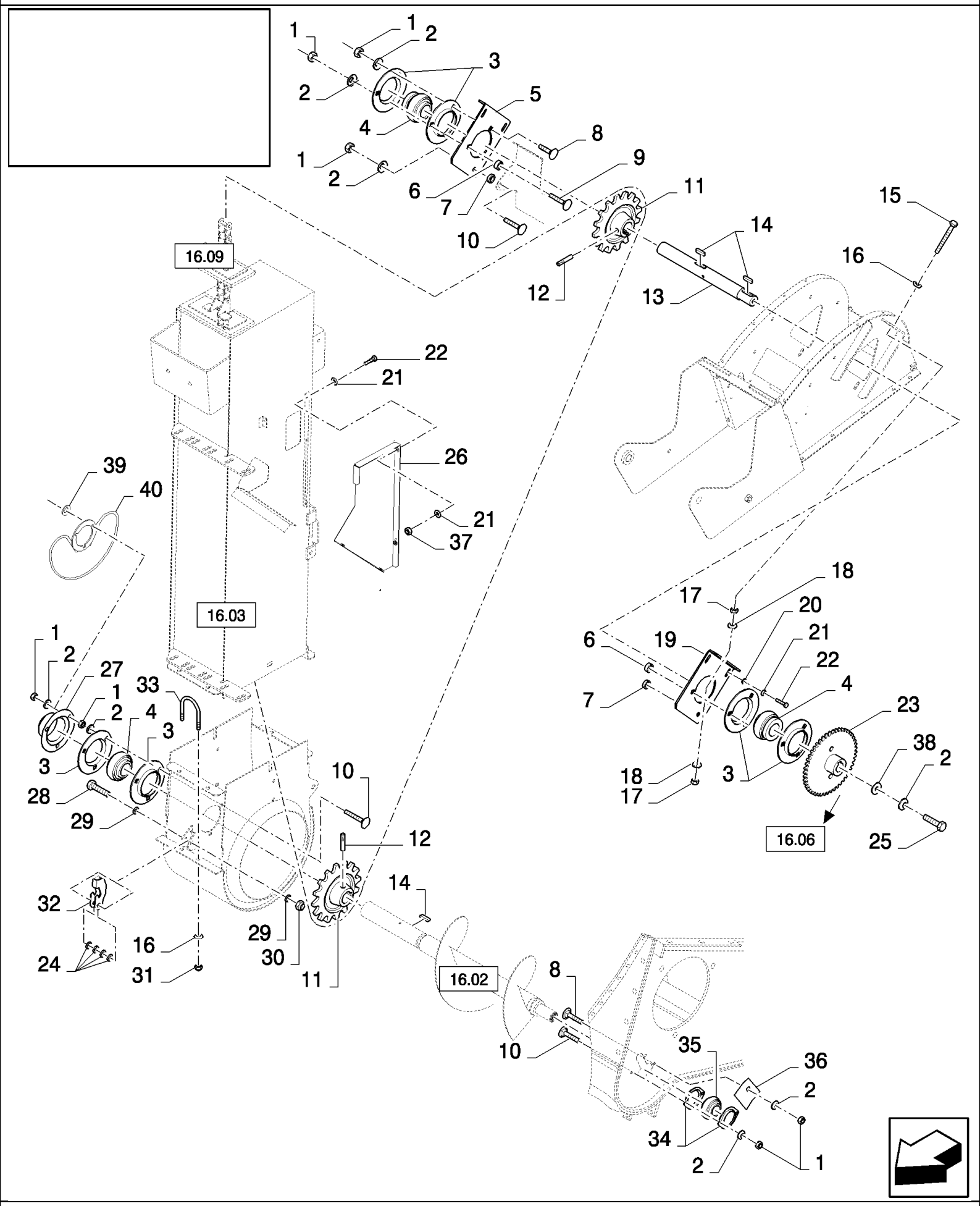

CX880 COMBINE - BASE UNIT (2/01-)

16.08(01) GRAIN ELEVATOR CHAIN DRIVE

ссылка	Номер детали	Кол-во	Описание
1	100016	17	NUT, M10, Cl 8,
2	140045	18	WASHER, SPRING, Belleville, M10,
3	36403	6	FLANGE,
4	212606	3	BEARING ASSY, , BSN C285
4	84814912	3	BEARING, BALL, , ASN D286
5	86595355	1	PLATE,
6	84077993	2	WASHER,
7	84334843	2	WASHER,
8	V43471	5	BOLT, M10x20
9	374892	2	BOLT, CARRIAGE, Short NK, M10 x 40, Cl8.8, Full Thd,
10	86512446	4	BOLT, CARRIAGE, Short NK, M10 x 30, Cl8.8, Full Thd, , BSN C285
10	86512446	4	BOLT, CARRIAGE, Short NK, M10 x 30, Cl8.8, Full Thd, , ASN D286
11	84437715	2	SPROCKET, DRIVEN, , BSN C285
11	84437648	2	SPROCKET, DRIVEN, , ASN D286
12	333960	2	PIN, LOCK, M6 x 50, Slotted,
13	84437932	1	SHAFT,
14	354775	3	KEY,
15	300382	2	BOLT, Hex, M8 x 60, 8.8, Full Thd, M8x60, BSN C285
15	86977784	2	SCREW, M8x60, ASN D286
16	140016	4	WASHER, M8 x 16 x 1.6,
17	89706690	4	NUT, M8, Cl 8,
18	322358	4	WASHER, SPRING, Belleville, M8,
19	86595354	1	PLATE,
20	140040	4	WASHER, M6 x 22 x 2,
21	322357	14	WASHER, SPRING, Belleville, M6,
22	86508568	9	SCREW, Hex, M6 x 16, 8.8,
23	86595374	1	SPROCKET, DRIVEN, , BSN C347
23	84442293	1	SPROCKET, DRIVEN, , ASN D348
24	140042	4	WASHER, M10 x 34 x 3,
25	43139	1	SCREW, Hex, M10 x 25, 8.8, Full Thd, M10x25
26	84435183	1	COVER,
27	84334947	1	COVER,
28	120112	1	BOLT, Hex, M10 x 40, 8.8, Full Thd,
29	140017	2	WASHER, M10 x 20 x 2,
30	100037	1	NUT, M10 x 1.5, Cl 8,
31	86629542	2	NUT, LOCK, M8 x 1.25, Cl 8, , BSN C285
31	86629542	2	NUT, LOCK, M8 x 1.25, Cl 8, , ASN D286
32	86581559	1	HANDLE,
33	84989315	1	U-BOLT,
34	165385	2	FLANGE, , BSN C347
34	87106572	2	FLANGE, , ASN D348
35	325110	1	BEARING ASSY, , BSN C285
35	84069440	1	BEARING, BALL, , ASN D286
36	86580877	1	COVER,

ссылка	Номер детали	Кол-во	Описание
37	15896221	5	NUT, M6, Cl 10,
38	84817997	1	WASHER, 40 OD x 11 ID x 3 mm Thick
39	86589279	3	WASHER, , FOR GERMANY ONLY
40	84441202	1	PROTECTING COVER, , FOR GERMANY ONLY

16.09(01) GRAIN ELEVATOR CHAIN

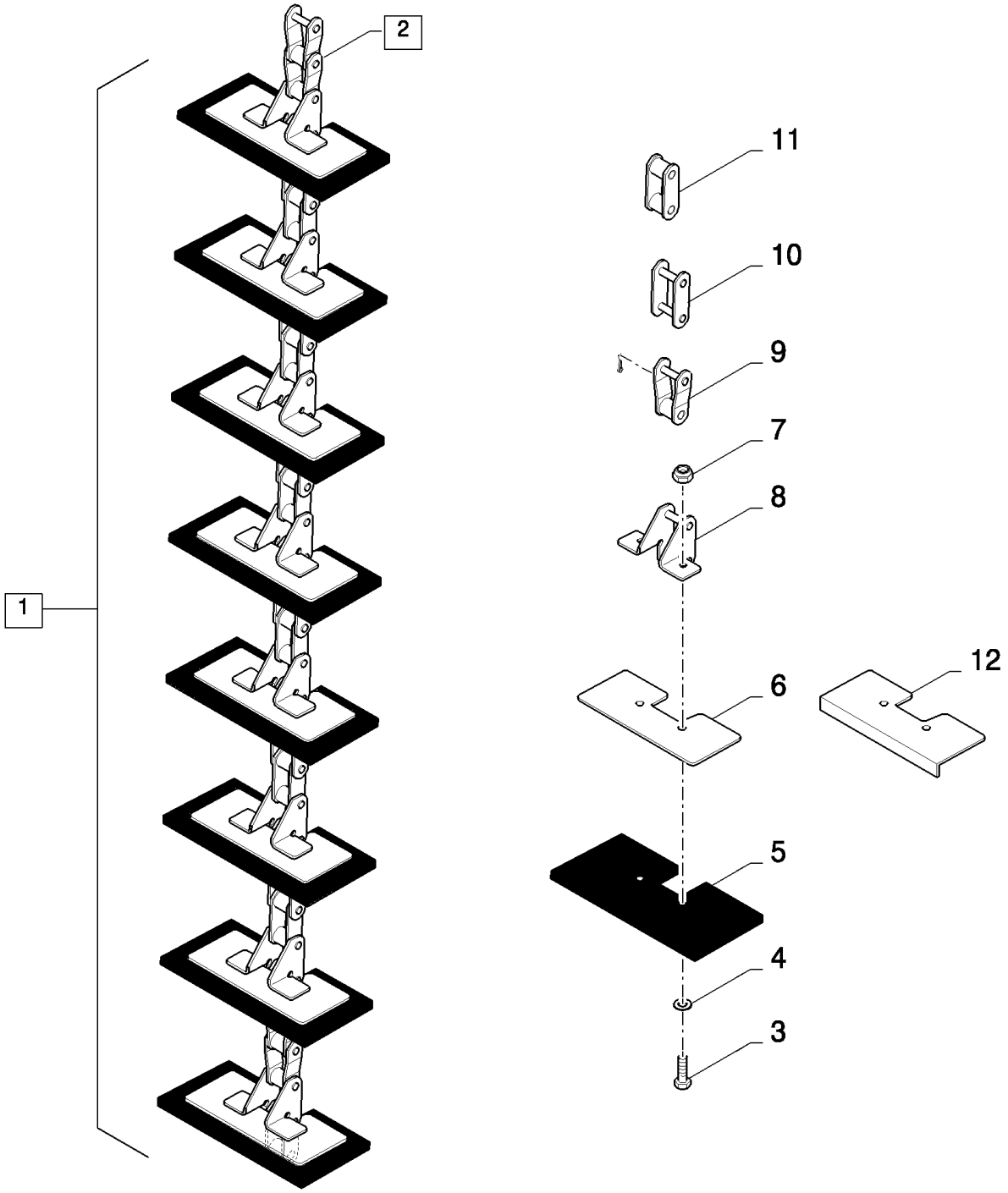

CX880 COMBINE - BASE UNIT (2/01-)

16.09(01) GRAIN ELEVATOR CHAIN

ссылка	Номер детали	Кол-во	Описание
1	84432111	1	CHAIN, (2 to 11), BSN C237
1	84437418	1	CHAIN, (2 to 12), ASN D238
2	84432056	1	CHAIN, (8 to 11), BSN C237
2	84437417	1	CHAIN, (8 to 11), ASN D238
3	86977786	74	BOLT, Hex, M6 x 25, 8.8,
4	140040	74	WASHER, M6 x 22 x 2,
5	86547123	37	BLADE, TILLAGE, , BSN C301
5	84443928	37	BLADE, TILLAGE, , ASN D302
6	84015241	37	PLATE,
7	353308	74	NUT, M6 x 1, Cl 8,
8	84017435	37	LINK, CONNECTING, , BSN C237
8	84437298	37	LINK, CHAIN, , ASN D238
9	40242	4	LINK, OFFSET,
10	40241	35	LINK, CONNECTING,
11	43278	72	LINK, CHAIN,
12	84444160	1	PLATE, , BSN C347
12	84449247	1	PLATE, , ASN D348

16.10(01) BUBBLE-UP

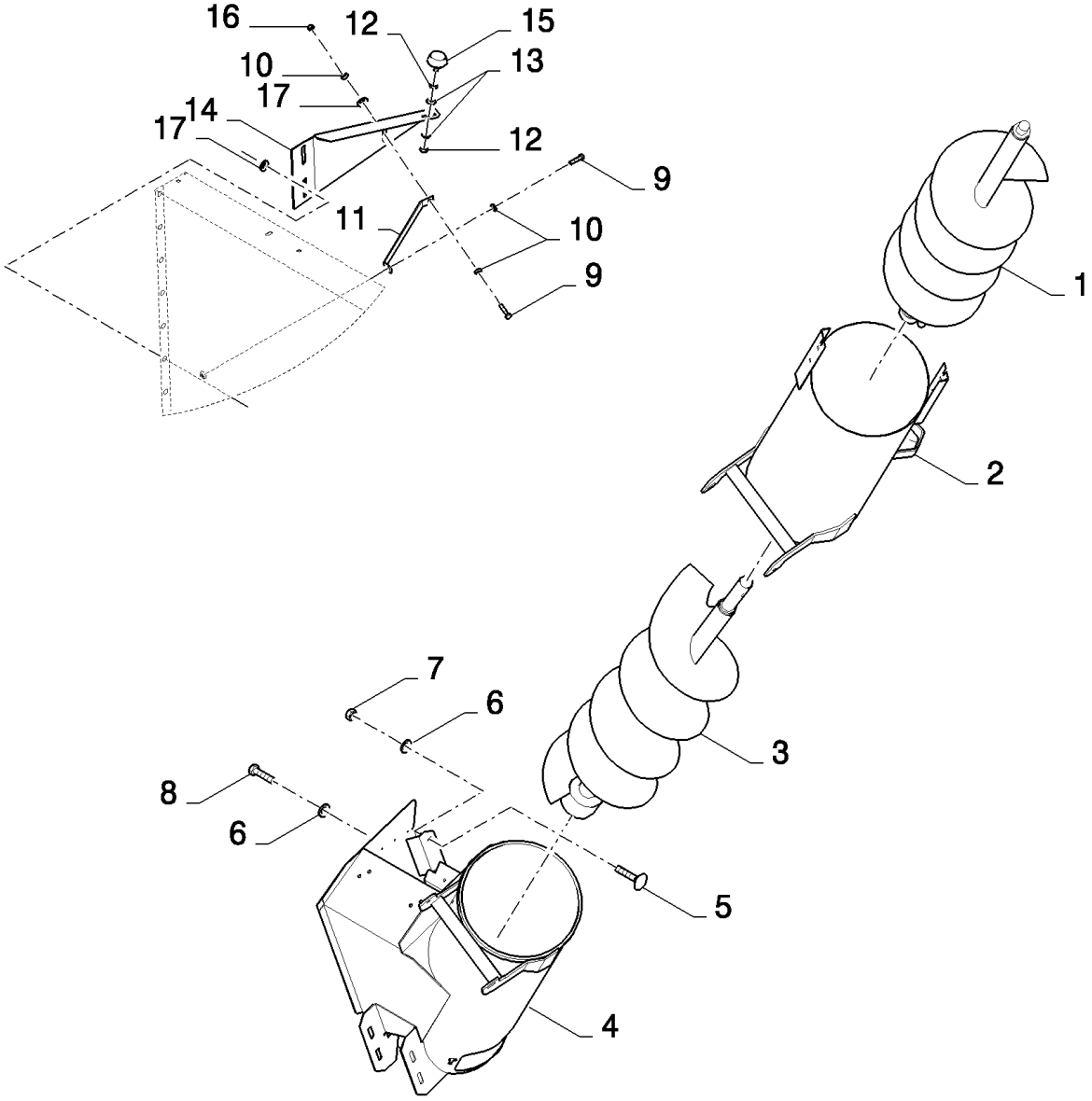

CX880 COMBINE - BASE UNIT (2/01-)

16.10(01) BUBBLE-UP

ссылка	Номер детали	Кол-во	Описание
1	84433567	1	AUGER, , REINFORCED, FOR CX760, CX780, CX820, CX840, CX860, CX880 ONLY, BSN C237
1	84438582	1	AUGER, , FOR CX760, CX780, CX820, CX840, CX860, CX880 ONLY, REINFORCED, ASN D238
1	84434995	1	AUGER, , FOR CX760, CX780, CX820, CX840, CX860, CX880 ONLY, STANDARD, BSN C237
1	84438580	1	AUGER, , STANDARD, FOR CX760, CX780, CX820, CX840, CX860, CX880 ONLY, ASN D238
1	84437369	1	AUGER, , REINFORCED, FOR CX720, CX740 ONLY, FOR CX820, CX840 WITH LOW VERSION, BSN C237
1	84438683	1	AUGER, , FOR CX820, CX840 WITH LOW VERSION, FOR CX720, CX740 ONLY, REINFORCED, ASN D238
1	84437358	1	AUGER, , FOR CX720, CX740 ONLY, FOR CX820, CX840 WITH LOW VERSION, STANDARD, BSN C237
1	84438681	1	AUGER, , STANDARD, FOR CX820, CX840 WITH LOW VERSION, FOR CX720, CX740 ONLY, ASN D238
2	84989037	1	TUBE, , FOR CX760, CX780, CX820, CX840, CX860, CX880 ONLY
2	84437373	1	TUBE, , FOR CX720, CX740 ONLY, FOR CX820, CX840 WITH LOW VERSION
3	84438574	1	AUGER, , REINFORCED, BSN C237
3	84438574	1	AUGER, , REINFORCED, ASN D238
3	86580941	1	AUGER, , STANDARD, BSN C237
3	84438541	1	AUGER, , STANDARD, BSN F238479
3	84438574	1	AUGER, , STANDARD BECAME REINFORCED, ASN D480
4	86595353	1	TUBE,
5	86507486	2	BOLT, CARRIAGE, Short NK, M8 x 20, Cl8.8, Full Thd,
6	322358	6	WASHER, SPRING, Belleville, M8,
7	89706690	2	NUT, M8, Cl 8,
8	16043224	4	BOLT, Hex, M8 x 16, 8.8, Full Thd,
9	16043224	2	BOLT, Hex, M8 x 16, 8.8, Full Thd,
10	322358	3	WASHER, SPRING, Belleville, M8,
11	84989162	1	SUPPORT,
12	100016	2	NUT, M10, Cl 8,
13	140045	2	WASHER, SPRING, Belleville, M10,
14	84077956	1	SUPPORT,
15	190029	1	INSULATOR BLOCK,
16	89706690	1	NUT, M8, Cl 8,
17	378243	3	WASHER, M8,

16.11(01) "BUBBLE-UP" TUBE

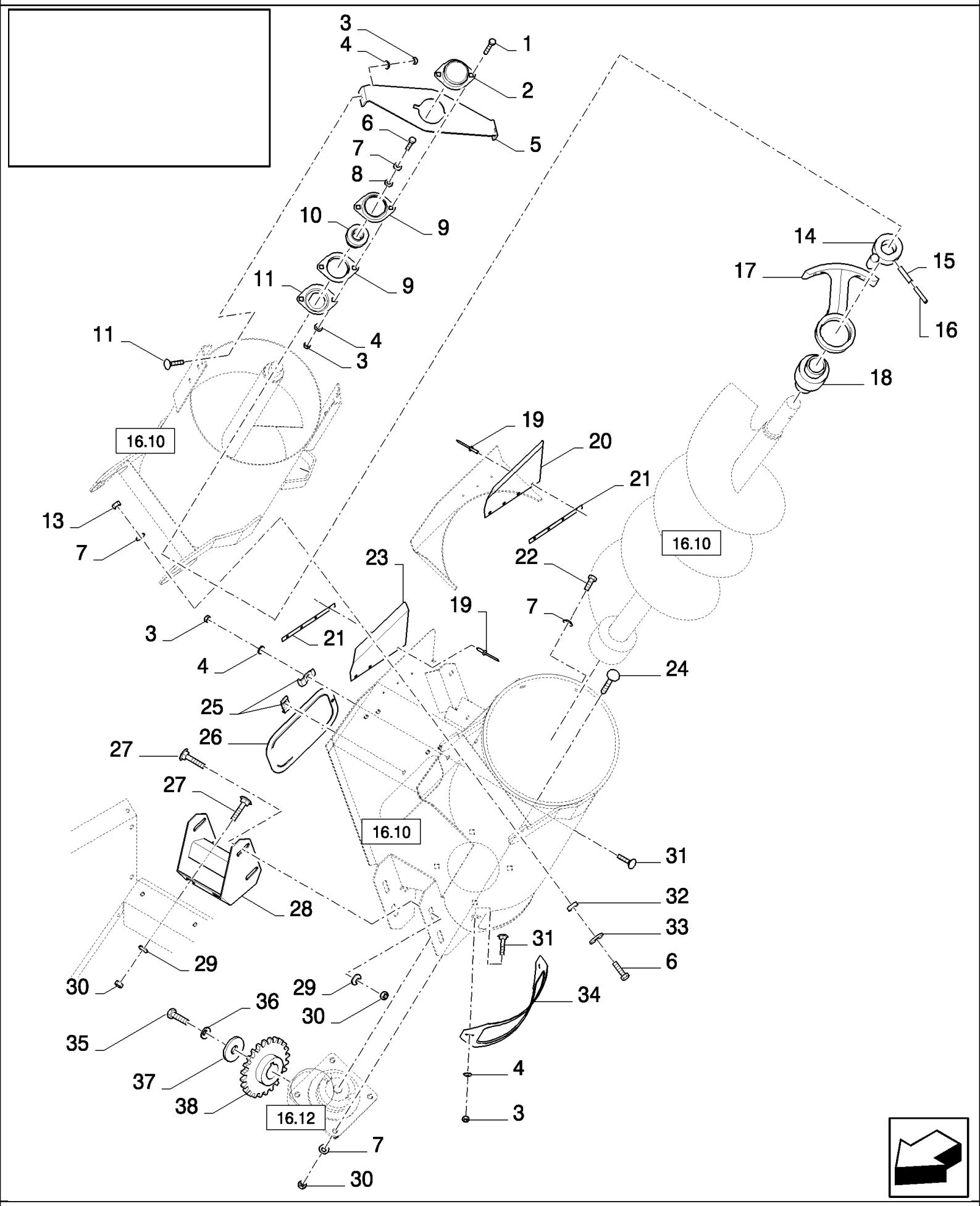

CX880 COMBINE - BASE UNIT (2/01-)

16.11(01) "BUBBLE-UP" TUBE

ссылка	Номер детали	Кол-во	Описание
1	43127	2	BOLT, Hex, M8 x 25, 8.8,
2	750092	1	COVER,
3	89706690	8	NUT, M8, Cl 8,
4	322358	8	WASHER, SPRING, Belleville, M8,
5	84989074	1	SUPPORT,
6	43140	3	BOLT, Hex, M10 x 30, 8.8, Full Thd,
7	140045	9	WASHER, SPRING, Belleville, M10,
8	140042	1	WASHER, M10 x 34 x 3,
9	86548974	2	FLANGE,
10	84434989	1	BEARING ASSY,
11	751044	1	COVER,
12	43465	2	BOLT, CARRIAGE, Short NK, M8 x 30, Cl8.8, Full Thd,
13	100037	2	NUT, M10 x 1.5, Cl 8,
14	84334205	1	RING,
15	412690	1	PIN, M10 x 65, Slotted,
16	412688	1	PIN, LOCK, M6 x 60, Slotted,
17	86595351	1	HOUSING, BEARING,
18	84334507	1	BEARING ASSY,
19	NS	8	NOT SERVICED,
20	84334981	1	PLATE,
21	84334990	2	PLATE, FIXING,
22	43138	2	SCREW, Hex, M10 x 20, 8.8, Full Thd,
23	84334976	1	PLATE,
24	86512446	4	BOLT, CARRIAGE, Short NK, M10 x 30, Cl8.8, Full Thd,
25	425093	2	CLIP,
26	916303	1	COVER,
27	V43471	6	BOLT, M10x20
28	84076986	1	SUPPORT,
29	86589279	6	WASHER, 10MM
30	100016	10	NUT, M10, Cl 8,
31	86507486	4	BOLT, CARRIAGE, Short NK, M8 x 20, Cl8.8, Full Thd,
32	84077456	2	WASHER,
33	9832748	2	WASHER, , BSN C327
33	140042	2	WASHER, M10 x 34 x 3, , ASN D328
34	84435246	1	COVER, , BSN C511
34	87314644	1	COVER, , ASN D512
35	9706687	1	SCREW, Hex, M12 x 30, 8.8,
36	140046	1	WASHER, Belleville, M12,
37	327084	1	WASHER,
38	86595373	1	SPROCKET, DRIVEN,

16.12(01) "BUBBLE-UP" GEARBOX

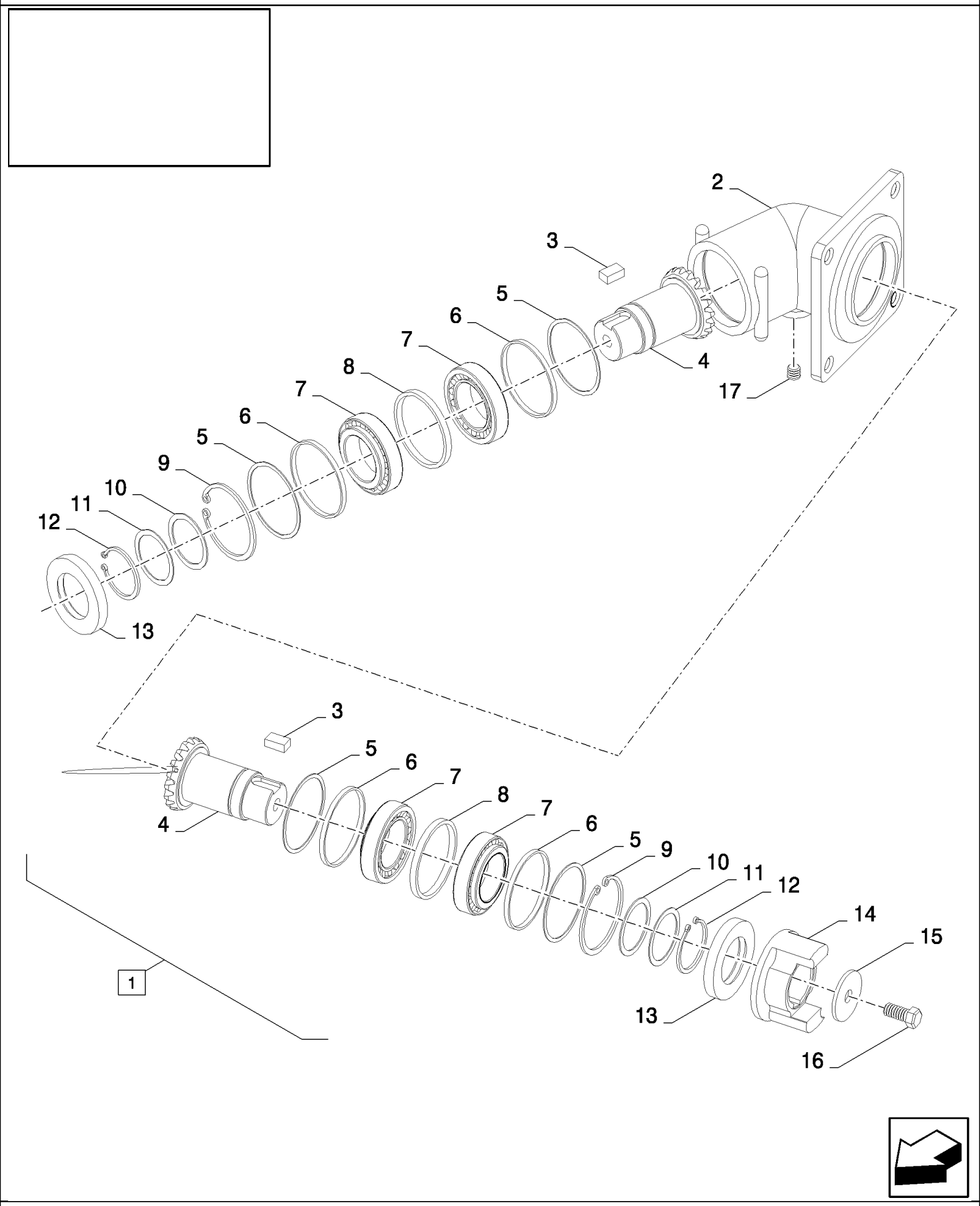

CX880 COMBINE - BASE UNIT (2/01-)

16.12(01) "BUBBLE-UP" GEARBOX

ссылка	Номер детали	Кол-во	Описание
1	84320129	1	GEARBOX, (2to17)
2	84437272	1	HOUSING,
3	84437571	2	KEY,
4	84437278	2	GEAR,
5	84437581	2	SHIM, SET OF 2
6	84437569	4	SPACER,
7	84438713	4	BEARING ASSY,
8	84437570	2	SPACER,
9	382103	2	RING, SNAP, M75, Int,
10	84437580	2	SHIM,
11	84437582	2	SHIM,
12	84437572	2	CIRCLIP,
13	84437282	2	SEAL, RUBBER,
14	86552356	1	HUB,
15	84437275	1	WASHER,
16	300388	1	SCREW, Hex, M12 x 25, 8.8,
17	84437573	2	PLUG,

16.13(01) GRAINTANK, RH

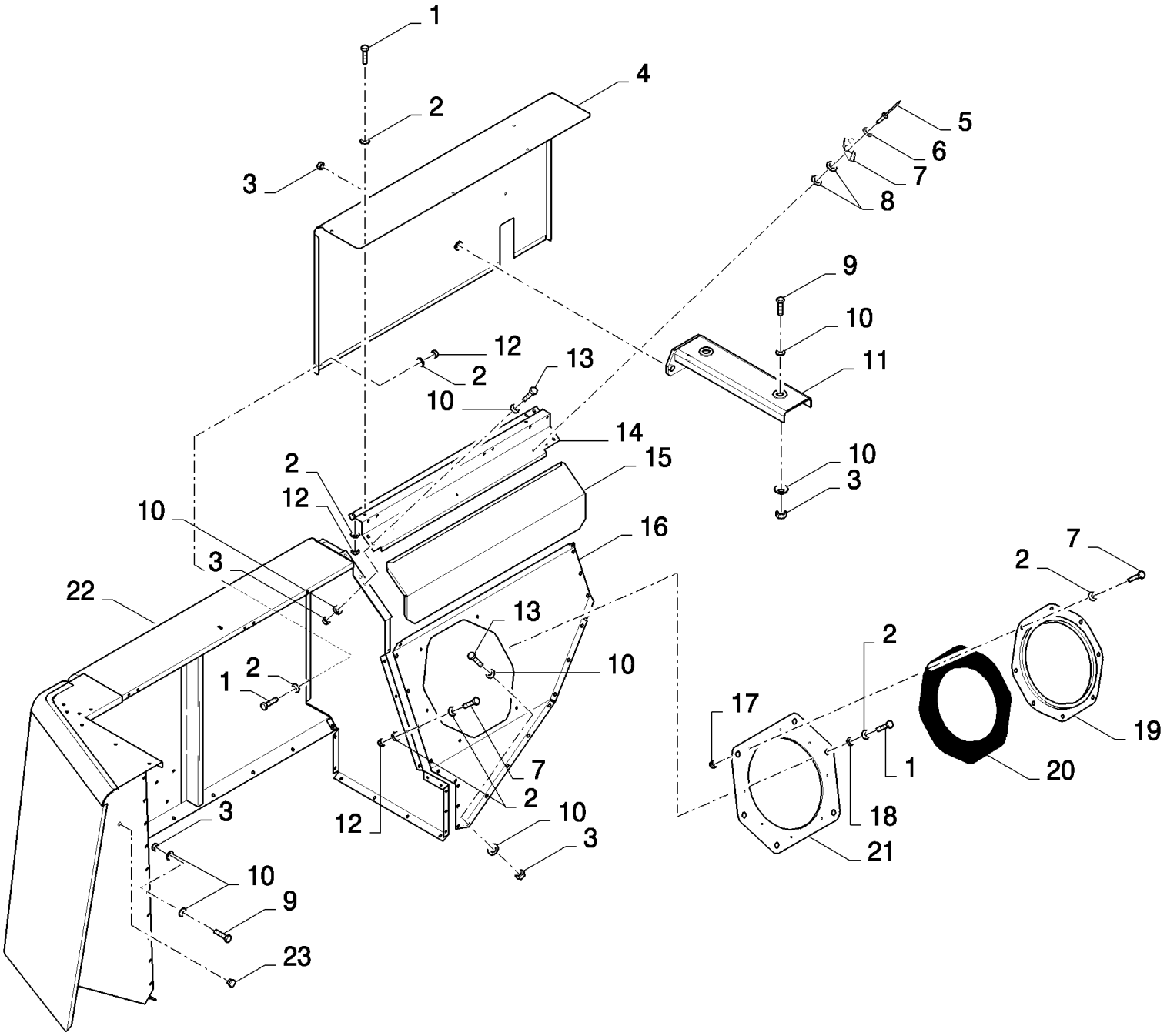

CX880 COMBINE - BASE UNIT (2/01-)

16.13(01) GRAINTANK, RH

ссылка	Номер детали	Кол-во	Описание
1	86508568	AR	SCREW, Hex, M6 x 16, 8.8,
2	322357	AR	WASHER, SPRING, Belleville, M6,
3	89706690	AR	NUT, M8, Cl 8,
4	84076903	1	COVER, , FOR CX820, CX840, CX860, CX880 ONLY, FOR CX720, CX740, CX760, CX780 ONLY, BSN C427
4	84461084	1	LID, , FOR CX720, CX740, CX760, CX780 ONLY, FOR CX820, CX840, CX860, CX880 ONLY, ASN D428
4	84434220	1	COVER, , FOR CX820, CX840, CX860 ONLY, FOR 3 M VERSION ONLY, BSN C277
4	84441404	1	COVER, , FOR 3 M VERSION ONLY, FOR CX820, CX840, CX860 ONLY, BSN F278427
4	84461026	1	COVER, , FOR CX820, CX840, CX860 ONLY, FOR 3 M VERSION ONLY, ASN D428
5	NS	3	NOT SERVICED, Rivet
6	362785	3	WASHER,
7	362786	3	FASTENER,
8	89824840	6	WASHER,
9	120104	AR	SCREW, Hex, M8 x 20, 8.8,
10	322358	AR	WASHER, SPRING, Belleville, M8,
11	84434407	1	REINFORCEMENT,
12	15896221	AR	NUT, M6, Cl 10,
14	84077759	1	PLATE,
15	84076560	1	COVER, , FOR CX820, CX840, CX860, CX880 ONLY, FOR CX720, CX740, CX760, CX780 ONLY, BSN C385
15	84454874	1	COVER, , FOR CX720, CX740, CX760, CX780 ONLY, FOR CX820, CX840, CX860, CX880 ONLY, ASN D386
15	84076705	1	COVER, , FOR 3 M VERSION ONLY, FOR CX820, CX840, CX860 ONLY, BSN C385
15	84454946	1	COVER, , FOR CX820, CX840, CX860 ONLY, FOR 3 M VERSION ONLY, ASN D386
16	84077871	1	PLATE,
17	353308	8	NUT, M6 x 1, Cl 8,
18	140041	6	WASHER, M8 x 28 x 3,
19	84077015	1	COVER,
20	84076762	1	SEAL, RUBBER,
21	84077908	1	PLATE,
22	84076253	1	PANEL, SIDE, , FOR CX820, CX840, CX860, CX880 ONLY
22	84076258	1	PANEL, SIDE, , FOR 3 M VERSION ONLY, FOR CX820, CX840, CX860 ONLY
22	84076256	1	PANEL, SIDE, , FOR CX720, CX740, CX760, CX780 ONLY
23	331231	1	GROMMET,
13	16043224	AR	BOLT, Hex, M8 x 16, 8.8, Full Thd,

16.14(01) GRAINTANK, MIDDLE

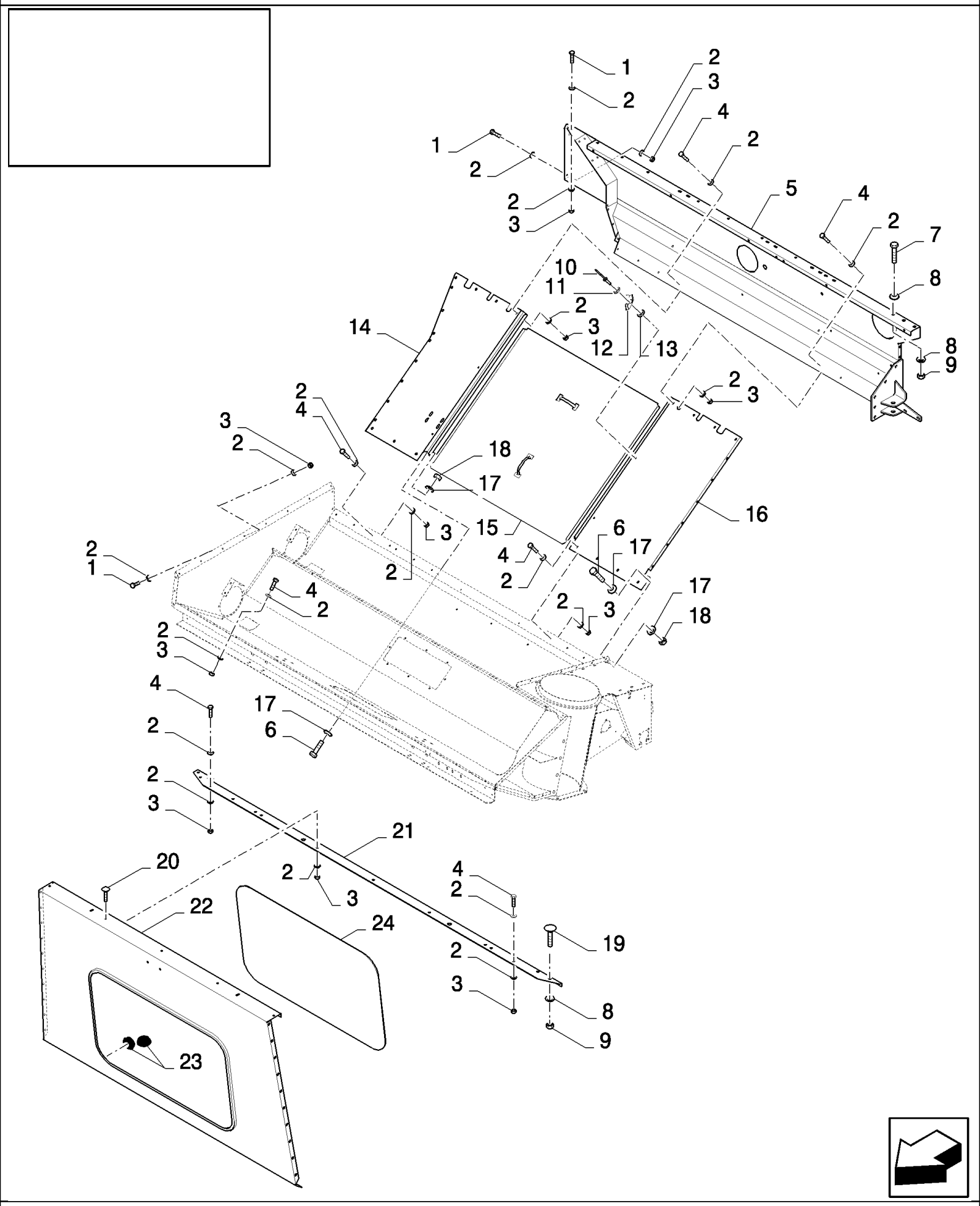

16.14(01) GRAINTANK, MIDDLE

ссылка	Номер детали	Кол-во	Описание
2	322358	AR	WASHER, SPRING, Belleville, M8,
3	89706690	AR	NUT, M8, Cl 8,
4	120104	AR	SCREW, Hex, M8 x 20, 8.8,
5	84073104	1	PLATE, , FOR CX820, CX840, CX860, CX880 ONLY
5	84073293	1	PLATE, , FOR CX820, CX840, CX860 ONLY, FOR 3 M VERSION ONLY
5	84076255	1	PANEL, SIDE, , FOR CX720, CX740, CX760, CX780 ONLY
6	43138	AR	SCREW, Hex, M10 x 20, 8.8, Full Thd,
7	300388	AR	SCREW, Hex, M12 x 25, 8.8,
8	140046	AR	WASHER, Belleville, M12,
9	9706685	AR	NUT, M12, Cl 8,
10	NS	5	NOT SERVICED, Rivet
11	362785	5	WASHER,
12	362786	5	FASTENER,
13	89824840	5	WASHER, 4MM
14	84440720	1	FLOOR, , FOR CX820, CX840, CX860, CX880 ONLY, BSN C335
14	84447674	1	FLOOR, , FOR CX820, CX840, CX860, CX880 ONLY, ASN D336
14	84439913	1	FLOOR, , FOR CX720, CX740, CX760, CX780 ONLY, FOR 3 M VERSION ONLY, FOR CX820, CX840, CX860 ONLY, BSN C335
14	84447675	1	FLOOR, , FOR CX820, CX840, CX860 ONLY, FOR 3 M VERSION ONLY, FOR CX720, CX740, CX760, CX780 ONLY, ASN D336
15	86584544	1	DOOR, 2 Handles, FOR CX820, CX840, CX860, CX880 ONLY
15	84075488	1	DOOR, 1 Handle, FOR CX720, CX740, CX760, CX780 ONLY, FOR 3 M VERSION ONLY, FOR CX820, CX840, CX860 ONLY
16	86595656	1	FLOOR,
17	140045	AR	WASHER, SPRING, Belleville, M10,
18	100016	AR	NUT, M10, Cl 8,
19	120044	2	BOLT, CARRIAGE, Short NK, M12 x 30, Cl8.8, Full Thd,
20	86507486	7	BOLT, CARRIAGE, Short NK, M8 x 20, Cl8.8, Full Thd,
21	84076383	1	REINFORCEMENT, , FOR CX820, CX840, CX860, CX880 ONLY
21	84076621	1	REINFORCEMENT, , FOR CX720, CX740, CX760, CX780 ONLY, FOR CX820, CX840, CX860 ONLY, FOR 3 M VERSION ONLY
22	84071500	1	SHEET, FRONT,
23	9992358	12	ELASTIC STOP,
24	86566851	1	GLASS,
1	16043224	AR	BOLT, Hex, M8 x 16, 8.8, Full Thd,

16.15(01) GRAINTANK, LH

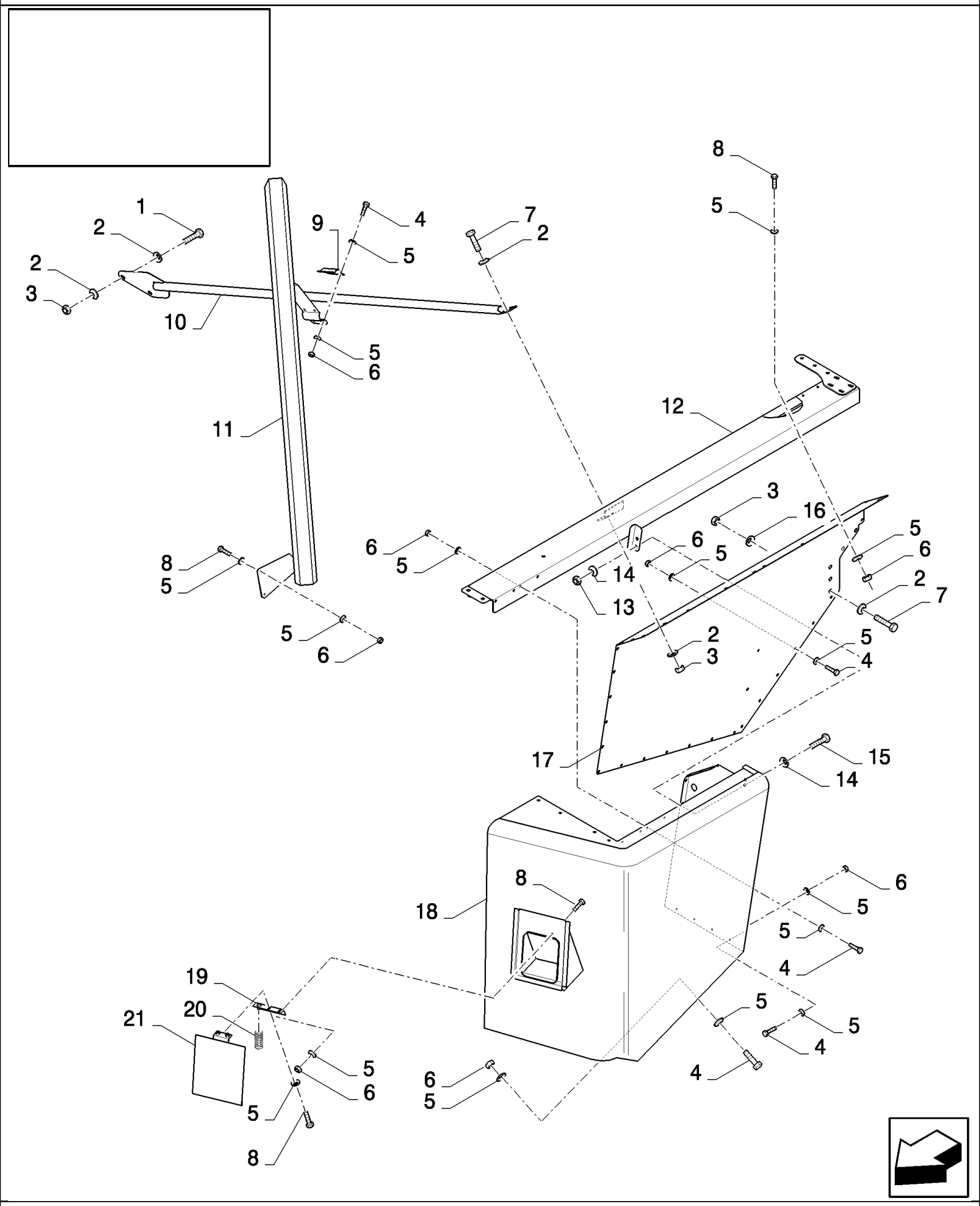

CX880 COMBINE - BASE UNIT (2/01-)

16.15(01) GRAINTANK, LH

ссылка	Номер детали	Кол-во	Описание
1	300388	2	SCREW, Hex, M12 x 25, 8.8,
2	140046	AR	WASHER, Belleville, M12,
3	9706685	AR	NUT, M12, Cl 8,
5	322358	AR	WASHER, SPRING, Belleville, M8,
6	89706690	AR	NUT, M8, Cl 8,
7	300389	AR	BOLT, Hex, M12 x 35, 8.8, Full Thd,
8	120104	AR	SCREW, Hex, M8 x 20, 8.8,
9	84077354	1	CLIP,
10	86594456	1	SUPPORT, , FOR CX820, CX840, CX860, CX880 ONLY
10	86601191	1	SUPPORT, , FOR CX720, CX740, CX760, CX780 ONLY, FOR 3 M VERSION ONLY, FOR CX820, CX840, CX860 ONLY
11	84077341	1	CHUTE, , FOR CX820, CX840, CX860, CX880 ONLY
11	84077406	1	CHUTE, , FOR CX720, CX740, CX760, CX780 ONLY, FOR CX820, CX840, CX860 ONLY, FOR 3 M VERSION ONLY
12	84072961	1	PROFILE,
13	100016	2	NUT, M10, Cl 8,
14	140045	4	WASHER, SPRING, Belleville, M10,
15	43138	2	SCREW, Hex, M10 x 20, 8.8, Full Thd,
16	86585939	5	WASHER, 12MM
17	84072715	1	PLATE,
18	84076254	1	PANEL, SIDE, , FOR CX820, CX840, CX860, CX880 ONLY
18	84076257	1	PANEL, SIDE, , FOR CX720, CX740, CX760, CX780 ONLY, FOR 3 M VERSION ONLY, FOR CX820, CX840, CX860 ONLY
19	84077042	1	BRACKET,
20	80918027	1	SPRING,
21	84077041	1	DOOR,
4	16043224	AR	BOLT, Hex, M8 x 16, 8.8, Full Thd,

16.16(01) GRAIN TANK, BOTTOM

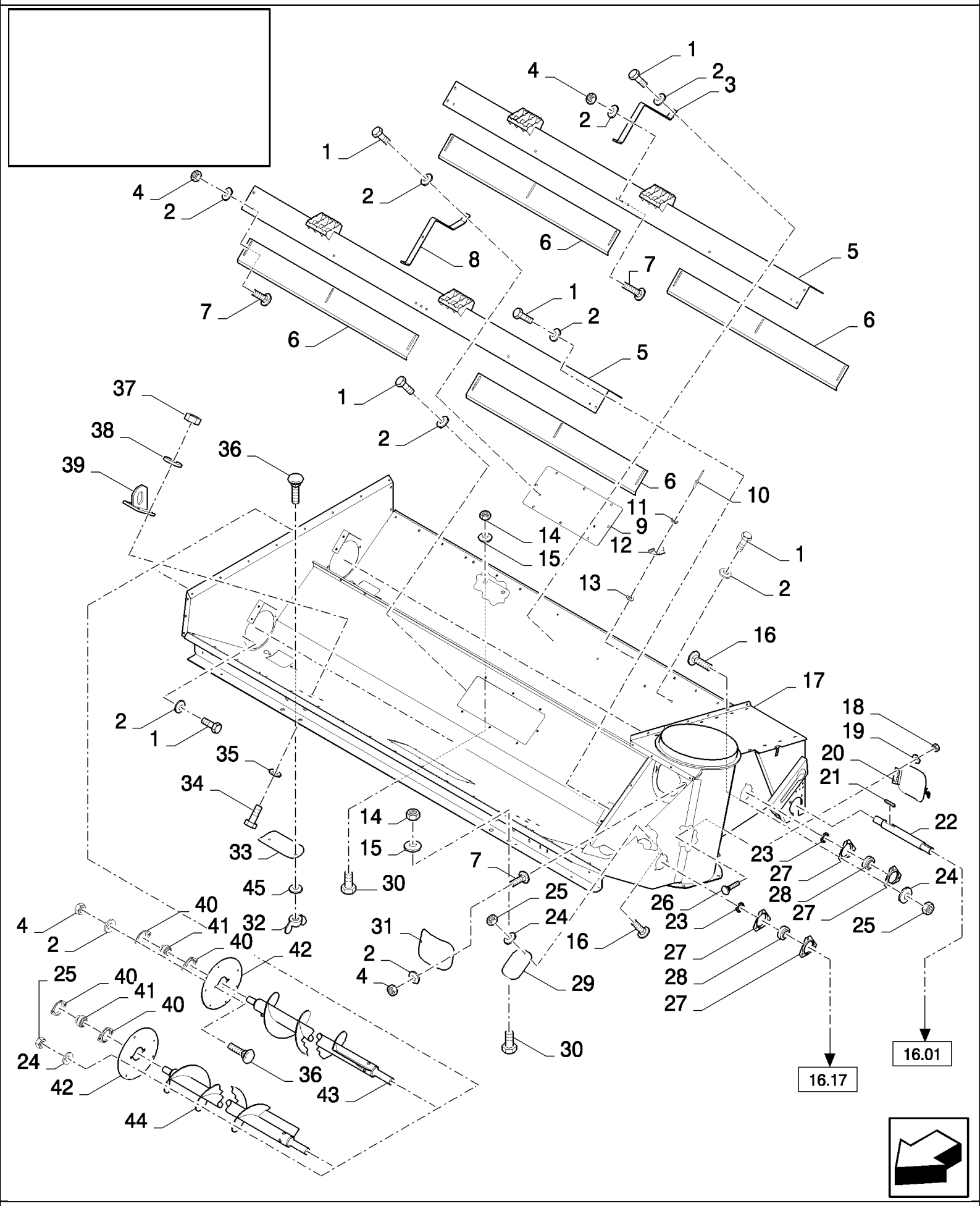

CX880 COMBINE - BASE UNIT (2/01-)

16.16(01) GRAIN TANK, BOTTOM

ссылка	Номер детали	Кол-во	Описание
1	120104	AR	SCREW, Hex, M8 x 20, 8.8,
2	322358	AR	WASHER, SPRING, Belleville, M8,
3	86597938	1	SUPPORT,
4	89706690	42	NUT, M8, Cl 8,
5	86584814	2	COVER, , FOR CX820, CX840, CX860, CX880 ONLY
5	86594895	2	COVER, , FOR CX720, CX740, CX760, CX780 ONLY, FOR 3 M VERSION ONLY, FOR CX820, CX840, CX860 ONLY
6	86597864	8	PLATE, , FOR CX820, CX840, CX860, CX880 ONLY
6	86594896	8	PLATE, , FOR CX720, CX740, CX760, CX780 ONLY, FOR CX820, CX840, CX860 ONLY, FOR 3 M VERSION ONLY
7	86507486	30	BOLT, CARRIAGE, Short NK, M8 x 20, Cl8.8, Full Thd,
8	86597937	1	SUPPORT,
9	86591962	2	COVER,
9	86598446	1	COVER, , FOR CX820, CX840, CX860 ONLY, FOR CX820, CX840, CX860, CX880 ONLY
9	86598532	1	COVER, , FOR CX720, CX740, CX760, CX780 ONLY
10	NS	2	NOT SERVICED, Rivet
11	362785	2	WASHER,
12	362786	2	FASTENER,
13	140015	2	WASHER, 6MM
14	100020	6	NUT, M16, Cl 8,
15	86589278	6	WASHER, SPRING,
16	V43471	7	BOLT, M10x20
17	86594879	1	GRAIN TANK, , FOR CX820, CX840, CX860, CX880 ONLY
17	86594878	1	GRAIN TANK, , FOR CX720, CX740, CX760, CX780 ONLY
17	86594877	1	GRAIN TANK, , FOR CX820, CX840, CX860 ONLY, FOR 3 M VERSION ONLY
18	15896221	2	NUT, M6, Cl 10,
19	322357	2	WASHER, SPRING, Belleville, M6,
20	86600940	1	COVER,
21	170052	2	KEY,
22	84061200	1	SHAFT, , FOR CX720, CX740, CX760, CX780 ONLY, FOR CX820, CX840, CX860, CX880 ONLY
22	84069285	1	SHAFT, , FOR 3 M VERSION ONLY, FOR CX820, CX840, CX860 ONLY
23	84075099	2	WASHER,
24	412655	11	WASHER, SPRING, Belleville, M10,
25	100016	11	NUT, M10, Cl 8,
26	9706703	2	BOLT, CARRIAGE, Short NK, M6 x 20, Cl8.8, Full Thd,
27	36403	4	FLANGE,
28	212607	2	BEARING, BALL, , BSN C281
28	84814912	2	BEARING, BALL, , ASN D282
29	86600691	1	COVER,
30	86508583	6	BOLT, Hex, M16 x 35, 8.8,
31	86597524	1	COVER,
32	84814893	4	NUT, WING, M10 x 1.5,
33	86597789	2	COVER, , BSN C407
33	84455919	2	COVER, , ASN D408

16.16(01) GRAIN TANK, BOTTOM

ссылка	Номер детали	Кол-во	Описание
34	86629541	8	BOLT, Hex, M12 x 40, 8.8, Full Thd,
35	140018	8	WASHER, M12 x 24 x 2.5, , BSN C225
35	394630	8	WASHER, 12MM, ASN D226
36	86512446	8	BOLT, CARRIAGE, Short NK, M10 x 30, Cl8.8, Full Thd,
37	9706685	8	NUT, M12, Cl 8,
38	140046	8	WASHER, Belleville, M12,
39	84438598	2	SUPPORT,
40	165385	4	FLANGE, , BSN C285
40	87106572	4	FLANGE, , ASN D286
41	84069440	2	BEARING, BALL,
42	84072842	2	PLATE,
43	84075320	1	AUGER, , FOR CX820, CX840, CX860, CX880 ONLY
43	84075322	1	AUGER, , FOR CX720, CX740, CX760, CX780 ONLY, FOR CX820, CX840, CX860 ONLY, FOR 3 M VERSION ONLY
44	84075319	1	AUGER, , FOR CX820, CX840, CX860, CX880 ONLY
44	84075321	1	AUGER, , FOR CX720, CX740, CX760, CX780 ONLY, FOR 3 M VERSION ONLY, FOR CX820, CX840, CX860 ONLY
45	140017	4	WASHER, M10 x 20 x 2, , BSN C225
45	140018	4	WASHER, M12 x 24 x 2.5, , ASN D226

16.17(01) UNLOADING AUGER

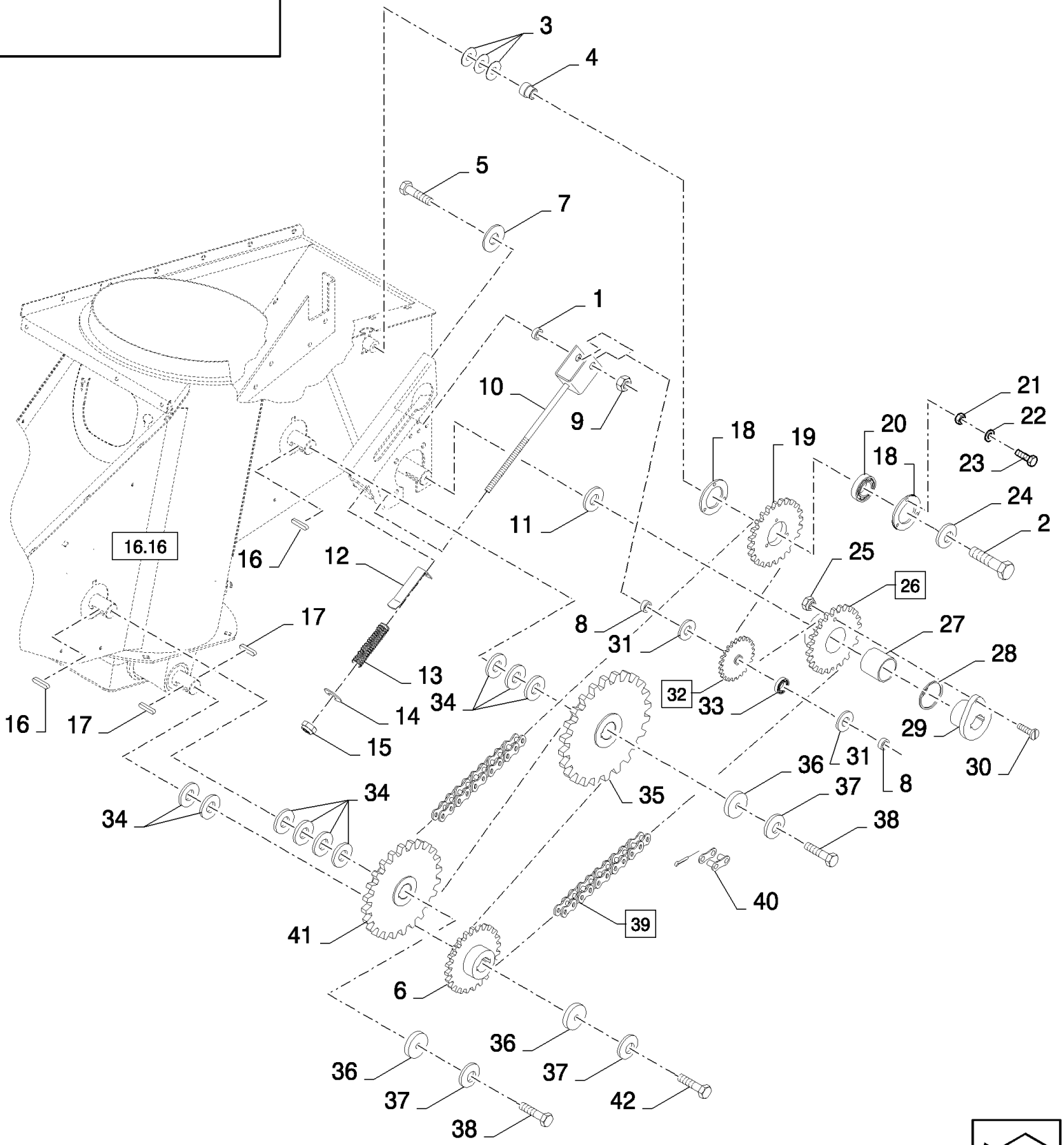

CX880 COMBINE - BASE UNIT (2/01-)

16.17(01) UNLOADING AUGER

ссылка	Номер детали	Кол-во	Описание
1	86623083	1	WASHER,
2	120090	1	SCREW, Hex, M16 x 50, 8.8,
3	393062	3	WASHER,
4	9515145	1	BUSHING,
5	120093	1	BOLT, Hex, M16 x 80, 8.8,
7	86519909	1	WASHER,
6	84069770	1	SPROCKET,
8	86582836	2	SPACER,
9	86000441	1	NUT, M16 x 2, Cl 8,
10	86588887	1	CLEVIS,
11	84073175	1	WASHER,
12	86601493	1	INDICATOR,
13	337829	1	SPRING,
14	378245	1	WASHER, M12,
15	412126	1	NUT, LOCK, M12 x 1.75, Cl 8,
16	170012	2	KEY, 10x8x50
17	170013	2	KEY, 10x8x56
17	170012	2	KEY, 10x8x50
18	310146	2	FLANGE,
19	86594534	1	SPROCKET,
20	443898	1	BEARING, BALL,
21	15896221	3	NUT, M6, Cl 10,
22	322357	3	WASHER, SPRING, Belleville, M6,
23	120100	3	BOLT, Hex, M6 x 20, 8.8,
24	140048	1	WASHER, SPRING, Belleville, M16,
25	86629542	1	NUT, LOCK, M8 x 1.25, Cl 8,
26	84069795	1	SPROCKET, (27)
27	9819016	1	BUSHING,
28	11068376	1	RING, SNAP, M35, Ext x 1.5 Thk,
29	84073176	1	BUSHING, SHEAR BOLT,
30	9819398	1	SCREW, , BSN C375
30	43129	1	BOLT, Hex, M8 x 40, 8.8, , ASN D375
31	34821	2	WASHER,
32	86627639	1	SPROCKET, (33)
33	66553	1	BEARING, BALL,
34	9800957	11	WASHER,
35	84069677	1	SPROCKET,
36	84073172	3	WASHER,
37	140046	3	WASHER, Belleville, M12,
38	9706687	2	SCREW, Hex, M12 x 30, 8.8,
39	86566790	1	CHAIN, (40)
40	86595264	1	LINK, CHAIN,
41	84069777	1	SPROCKET,
42	86629541	1	BOLT, Hex, M12 x 40, 8.8, Full Thd,

16.18(01) GRAINTANK COVERS, PIVOTING SYSTEM

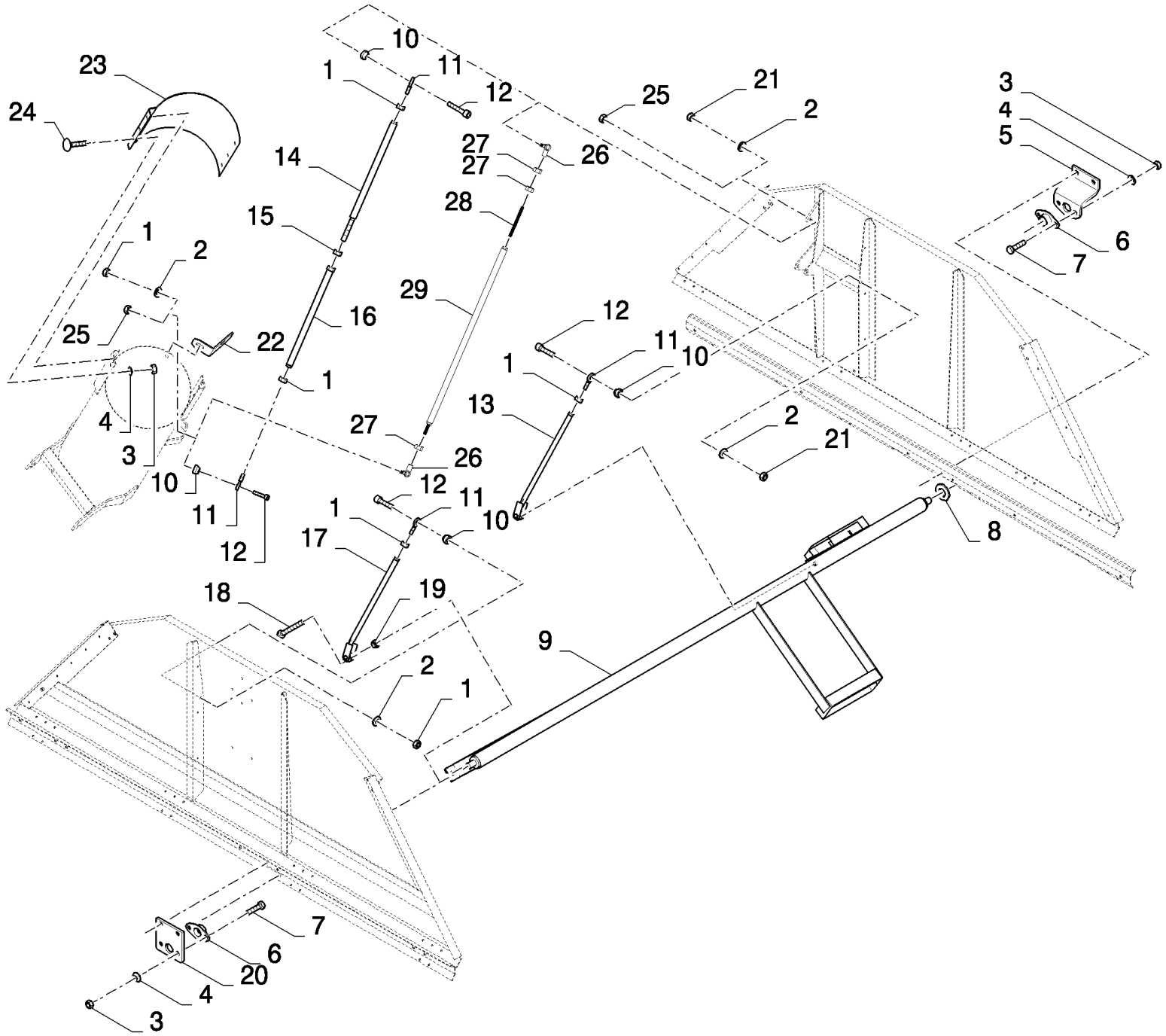

CX880 COMBINE - BASE UNIT (2/01-)

16.18(01) GRAINTANK COVERS, PIVOTING SYSTEM

ссылка	Номер детали	Кол-во	Описание
1	100016	4	NUT, M10, Cl 8,
2	140045	4	WASHER, SPRING, Belleville, M10, , BSN C411
2	140045	2	WASHER, SPRING, Belleville, M10, , ASN D412
3	89706690	8	NUT, M8, Cl 8,
4	322358	8	WASHER, SPRING, Belleville, M8,
5	84076417	1	SUPPORT,
6	338712	2	FLANGE,
7	120104	4	SCREW, Hex, M8 x 20, 8.8,
8	84434145	5	WASHER,
9	84334293	1	SHAFT, ARTICULATED, , BSN C237
9	84439506	1	SHAFT, , ASN D238
10	84076466	4	BUSHING, , BSN C411
10	84076466	2	BUSHING, , ASN D412
11	84076065	4	CONNECTION, SWIVEL, , BSN C237
11	84439533	4	CONNECTION, SWIVEL, , BSN F238411
11	84439533	2	CONNECTION, SWIVEL, , ASN D412
12	84015950	4	SCREW, M10x50, BSN C411
12	84015950	2	SCREW, , ASN D412
13	84076427	1	ROD,
14	84434466	1	ROD, , BSN C411
15	100020	1	NUT, M16, Cl 8, , BSN C411
16	84334220	1	ROD, , BSN C411
17	84076437	1	ROD,
18	300512	2	SCREW, Hex, M12 x 55, 8.8,
19	9706685	2	NUT, M12, Cl 8,
20	84076404	1	SUPPORT,
21	100037	4	NUT, M10 x 1.5, Cl 8,
22	84431107	1	BRACKET, , BSN C237
22	84437226	1	BRACKET, , BSN F238327
22	84448576	1	SUPPORT, , ASN D328
23	84334512	1	PLATE,
24	86507486	4	BOLT, CARRIAGE, Short NK, M8 x 20, Cl8.8, Full Thd,
25	100037	1	NUT, M10 x 1.5, Cl 8, , ASN D412
26	84457464	2	CONNECTION, SWIVEL, , ASN D412
27	100016	3	NUT, M10, Cl 8, , ASN D412
28	84457447	1	ROD, , ASN D412
29	84457474	1	TUBE, , ASN D412

16.19(01) GRAINTANK, COVERS

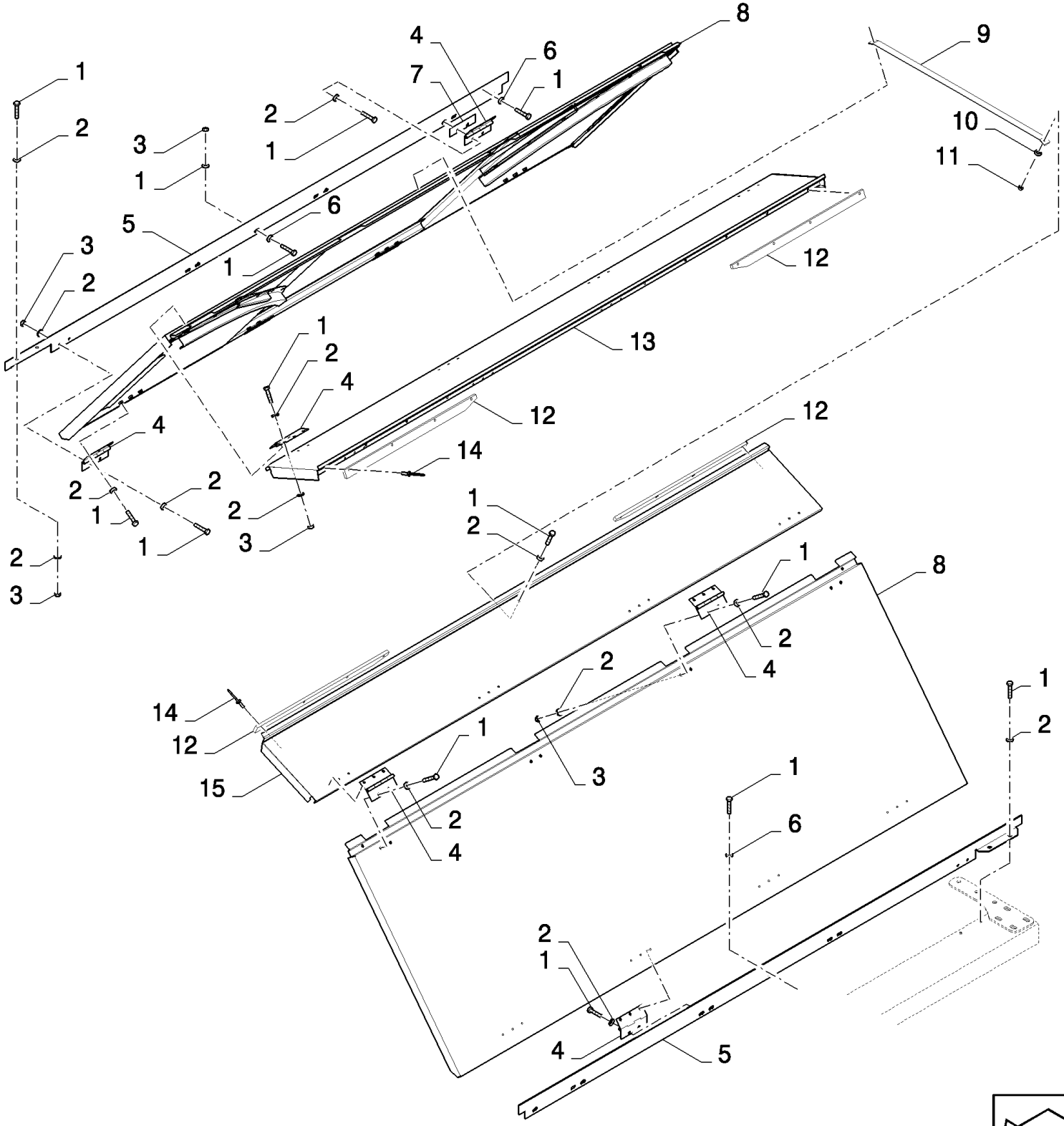

CX880 COMBINE - BASE UNIT (2/01-)

16.19(01) GRAINTANK, COVERS

ссылка	Номер детали	Кол-во	Описание
1	120100	AR	BOLT, Hex, M6 x 20, 8.8,
2	322357	AR	WASHER, SPRING, Belleville, M6,
3	15896221	AR	NUT, M6, Cl 10,
4	84071391	16	HINGE,
5	84076589	2	BRACKET,
6	412649	2	WASHER, SPRING, Belleville, M6,
7	84432861	6	SHIM, , BSN C241
8	84334178	2	PANEL, SIDE, , FOR 3 M VERSION ONLY, FOR CX760, CX780, CX820, CX840, CX860 ONLY
8	84334178	2	PANEL, SIDE, , FOR CX860, CX880 ONLY
8	84432593	2	PANEL, SIDE, , FOR CX720, CX740 ONLY, FOR CX820, CX840 ONLY
9	84989142	1	BAND, , FOR CX760, CX780, CX820, CX840, CX860 ONLY, FOR CX860, CX880 ONLY
9	84439053	1	BAND, , FOR CX720, CX740 ONLY
10	140040	2	WASHER, M6 x 22 x 2,
11	353308	2	NUT, M6 x 1, Cl 8,
12	84434268	4	GUIDE, , BSN C241
12	84439984	4	GUIDE, , FOR 3.3 M VERSION ONLY, ASN D242
12	84439453	4	GUIDE, , FOR 3 M VERSION ONLY, ASN D242
13	84431094	1	PANEL, SIDE, , FOR 3 M VERSION ONLY, FOR CX760, CX780, CX820, CX840, CX860 ONLY
13	84073058	1	PANEL, SIDE, , FOR CX860, CX880 ONLY
13	84432553	1	PANEL, SIDE, , FOR CX820, CX840 ONLY
13	84435878	1	PANEL, SIDE, , FOR CX720, CX740 ONLY
14	80445395	AR	RIVET,
15	84431097	1	PANEL, SIDE, , FOR CX760, CX780, CX820, CX840, CX860 ONLY, FOR 3 M VERSION ONLY
15	84072922	1	PANEL, SIDE, , FOR CX860, CX880 ONLY
15	84432546	1	PANEL, SIDE, , FOR CX820, CX840 ONLY
15	84435926	1	PANEL, SIDE, , FOR CX720, CX740 ONLY

16.20(01) GRAINTANK, COVERS

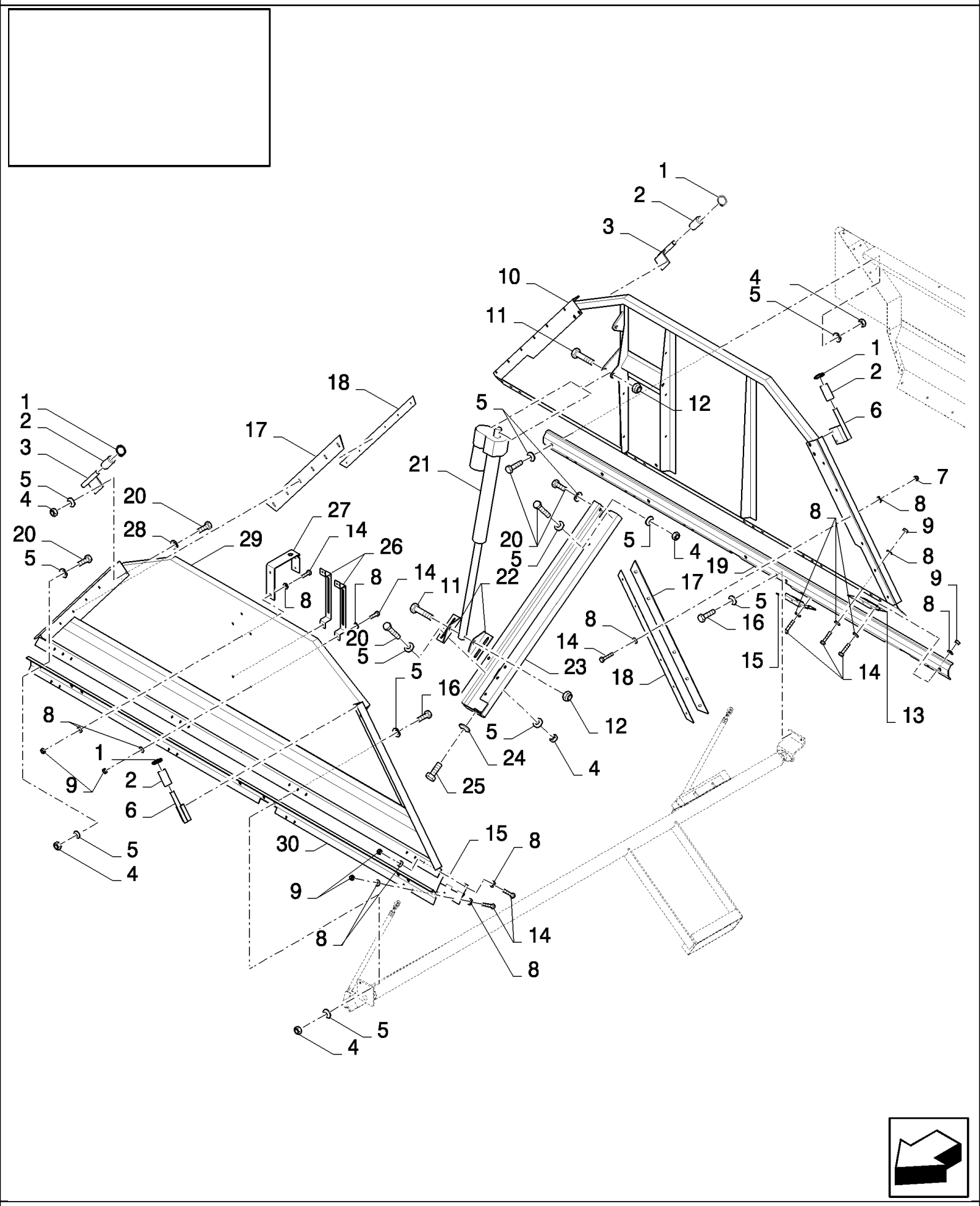

CX880 COMBINE - BASE UNIT (2/01-)

16.20(01) GRAINTANK, COVERS

ссылка	Номер детали	Кол-во	Описание
1	300625	4	RING, SNAP, M16, Ext,
2	84076202	4	BUSHING, GUIDE,
3	84334135	2	HINGE,
4	89706690	AR	NUT, M8, Cl 8,
5	322358	AR	WASHER, SPRING, Belleville, M8,
6	84334139	2	HINGE,
7	353308	20	NUT, M6 x 1, Cl 8,
8	322357	AR	WASHER, SPRING, Belleville, M6,
9	15896221	AR	NUT, M6, Cl 10,
10	84431136	1	PLATE, , FOR CX760, CX780, CX820, CX840, CX860 ONLY, FOR 3 M VERSION ONLY
10	84334035	1	PLATE, , FOR CX860, CX880 ONLY
10	84432434	1	PLATE, , FOR CX820, CX840 ONLY, BSN C335
10	84447704	1	PLATE, , FOR CX820, CX840 ONLY, ASN D336
10	84435124	1	PLATE, , FOR CX720, CX740 ONLY, BSN C335
10	84447705	1	PLATE, , FOR CX720, CX740 ONLY, ASN D336
11	9706693	2	BOLT, Hex, M12 x 60, 8.8,
12	100038	2	NUT, M12 x 1.75, Cl 8,
13	84433084	1	HINGE, , FOR CX720, CX740 ONLY, FOR CX760, CX780, CX820, CX840, CX860 ONLY, FOR 3 M VERSION ONLY
13	84071391	1	HINGE, , FOR CX860, CX880 ONLY, FOR CX820, CX840 ONLY
14	120100	AR	BOLT, Hex, M6 x 20, 8.8,
15	84071391	AR	HINGE,
16	43128	4	BOLT, Hex, M8 x 30, 8.8,
17	84334436	4	SEAL, , FOR CX760, CX780, CX820, CX840, CX860 ONLY, FOR CX860, CX880 ONLY
17	84434708	4	CANVAS, , FOR 3.3 M VERSION ONLY, FOR CX820, CX840 ONLY
17	84434708	4	CANVAS, , FOR CX720, CX740 ONLY
18	84334458	4	STRIP, , FOR CX760, CX780, CX820, CX840, CX860 ONLY, FOR CX860, CX880 ONLY
18	84434709	4	PLATE, FIXING, , FOR 3.3 M VERSION ONLY, FOR CX820, CX840 ONLY
18	84434709	4	PLATE, FIXING, , FOR CX720, CX740 ONLY
19	84431081	1	PROFILE, , FOR CX720, CX740 ONLY, FOR CX760, CX780, CX820, CX840, CX860 ONLY, FOR 3 M VERSION ONLY
19	84334615	1	PROFILE, , FOR CX860, CX880 ONLY, FOR CX820, CX840 ONLY
20	120104	25	SCREW, Hex, M8 x 20, 8.8,
20	120061	4	BOLT, Hex, M8 x 60, 8.8,
21	84077849	1	ACTUATOR,
22	84334388	2	SUPPORT, , BSN C277
22	84439916	1	SUPPORT, , BSN F278315
22	84447412	1	SUPPORT, , BSN F316335
22	84447603	1	SUPPORT, , ASN D336
23	84432687	1	SUPPORT, , BSN C277
23	84439892	1	SUPPORT, , BSN F278315
23	84447411	1	SUPPORT, , BSN F316335
23	84447602	1	SUPPORT, , ASN D336
24	140048	2	WASHER, SPRING, Belleville, M16,

ссылка	Номер детали	Кол-во	Описание
25	43138	2	SCREW, Hex, M10 x 20, 8.8, Full Thd,
26	84989183	2	BRACKET,
27	84989154	1	BRACKET,
28	412650	8	WASHER, Belleville, M8,
29	84431104	1	PLATE, , FOR CX760, CX780, CX820, CX840, CX860 ONLY, FOR 3 M VERSION ONLY
29	84334013	1	PLATE, , FOR CX860, CX880 ONLY
29	84432640	1	PLATE, , FOR CX820, CX840 ONLY
29	84435432	1	PLATE, , FOR CX720, CX740 ONLY
30	84989838	1	BRACKET, , FOR CX720, CX740 ONLY, FOR CX760, CX780, CX820, CX840, CX860 ONLY, FOR 3 M VERSION ONLY
30	84334664	1	BRACKET, , FOR CX860, CX880 ONLY, FOR CX820, CX840 ONLY

16.21(01) GRAINTANK, EXTENSIONS

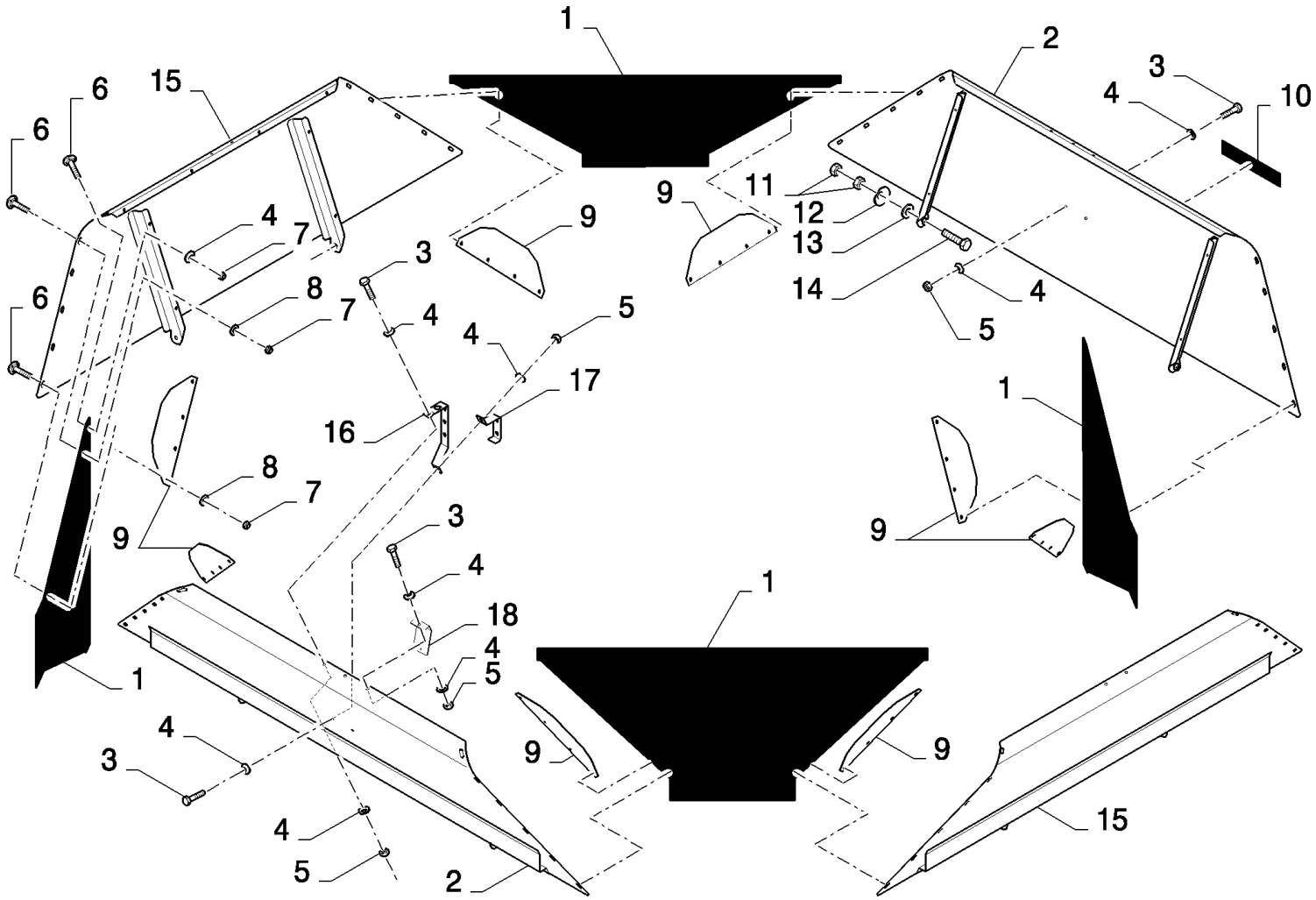

CX880 COMBINE - BASE UNIT (2/01-)

16.21(01) GRAINTANK, EXTENSIONS

ссылка	Номер детали	Кол-во	Описание
1	86589767	4	CANVAS, , FOR CX840 ONLY, BSN C347
1	84448975	4	CANVAS, , FOR CX840 ONLY, ASN D348
1	86588625	4	CANVAS, , FOR CX860, CX880 ONLY, BSN C347
1	84447719	4	CANVAS, , FOR CX860, CX880 ONLY, ASN D348
2	86588394	2	EXTENSION, , FOR CX840 ONLY
2	86588629	2	EXTENSION, , FOR CX860, CX880 ONLY
3	120104	AR	SCREW, Hex, M8 x 20, 8.8,
4	322358	AR	WASHER, SPRING, Belleville, M8,
5	89706690	AR	NUT, M8, Cl 8,
6	86507486	AR	BOLT, CARRIAGE, Short NK, M8 x 20, Cl8.8, Full Thd,
7	86629542	AR	NUT, LOCK, M8 x 1.25, Cl 8,
8	140041	AR	WASHER, M8 x 28 x 3,
9	84400127	8	PLATE, MOUNTING, , FOR CX840 ONLY
9	84400126	8	PLATE, MOUNTING, , FOR CX860, CX880 ONLY
10	401502	AR	STRIP, ANTI-SKID, 51mm x 18.3 Roll - Cut to Size
11	9706685	8	NUT, M12, Cl 8,
12	86585939	8	WASHER, 12MM
13	543043	8	WASHER,
14	120122	8	BOLT, Hex, M12 x 50, 8.8, Full Thd,
15	86588393	2	EXTENSION, , FOR CX840 ONLY
15	86588628	2	EXTENSION, , FOR CX860, CX880 ONLY
16	86584117	2	SUPPORT,
17	86582722	2	SUPPORT,
18	86582724	1	SUPPORT,

16.22(01) GRAINTANK, EXTENSIONS

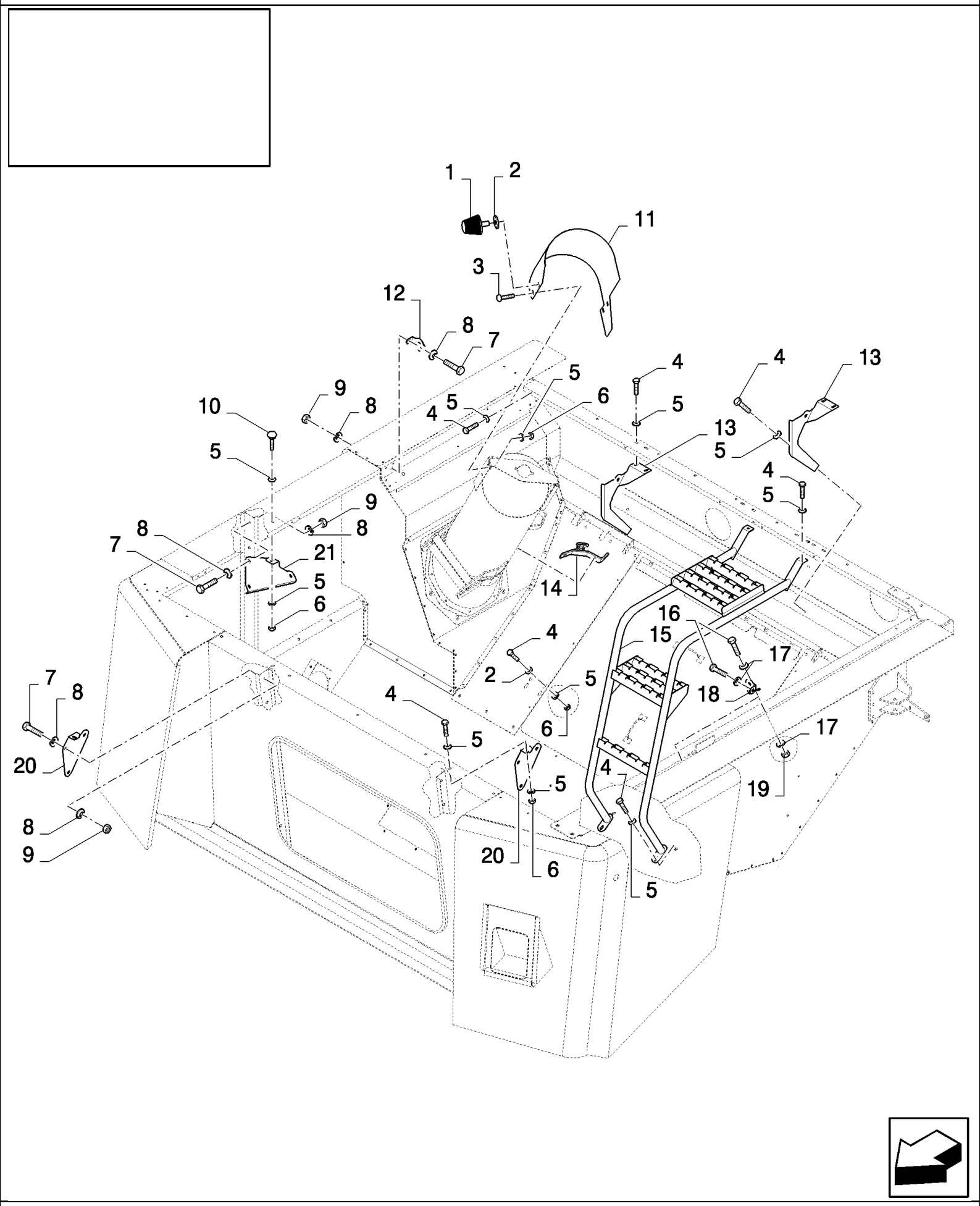

CX880 COMBINE - BASE UNIT (2/01-)

16.22(01) GRAINTANK, EXTENSIONS

ссылка	Номер детали	Кол-во	Описание
1	9839261	1	STOP,
2	140041	5	WASHER, M8 x 28 x 3,
3	86507486	4	BOLT, CARRIAGE, Short NK, M8 x 20, Cl8.8, Full Thd,
4	120104	AR	SCREW, Hex, M8 x 20, 8.8,
5	322358	AR	WASHER, SPRING, Belleville, M8,
6	89706690	AR	NUT, M8, Cl 8,
7	300388	8	SCREW, Hex, M12 x 25, 8.8,
8	140046	16	WASHER, Belleville, M12,
9	9706685	8	NUT, M12, Cl 8,
10	86507486	2	BOLT, CARRIAGE, Short NK, M8 x 20, Cl8.8, Full Thd,
11	86580964	1	EXTENSION,
12	84434913	1	HINGE,
13	86598411	2	HINGE,
14	84989746	1	SUPPORT,
15	86591116	1	STEP,
16	43140	4	BOLT, Hex, M10 x 30, 8.8, Full Thd,
17	140045	6	WASHER, SPRING, Belleville, M10,
18	86594661	2	HINGE,
19	100016	2	NUT, M10, Cl 8,
20	86588395	2	HINGE,
21	86598409	1	HINGE,

16.23(01) UNLOADING AUGER

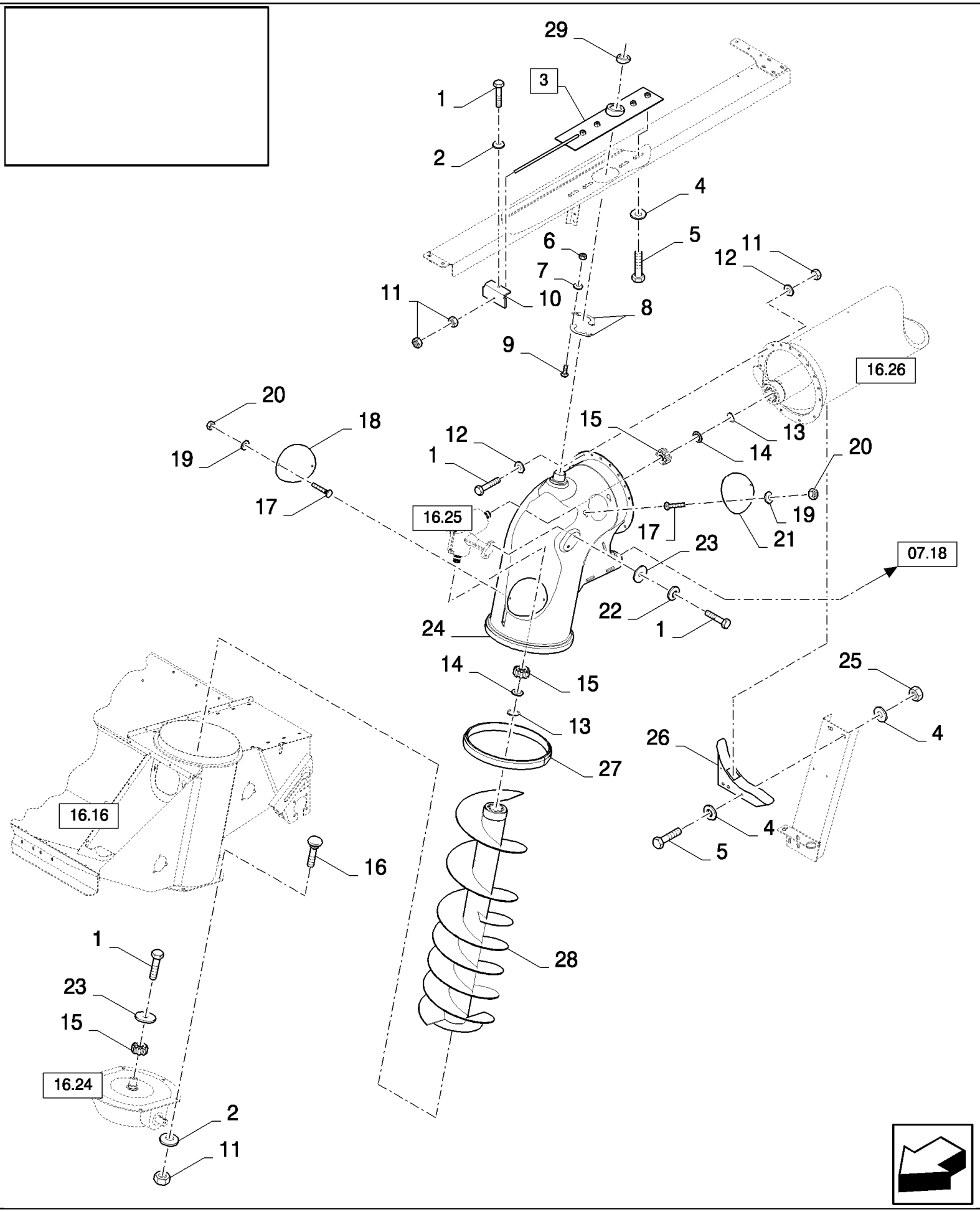

CX880 COMBINE - BASE UNIT (2/01-)

16.23(01) UNLOADING AUGER

ссылка	Номер детали	Кол-во	Описание
1	9706687	20	SCREW, Hex, M12 x 30, 8.8,
2	140046	7	WASHER, Belleville, M12,
3	86580953	1	PLATE, (29)
4	86589278	8	WASHER, SPRING,
5	43168	6	BOLT, Hex, M16 x 40, 8.8,
6	86508813	2	NUT, M5, Cl 8,
7	322356	2	WASHER, 5MM
8	86598897	2	SHIM,
9	120098	2	BOLT, Hex, M5 x 20, 8.8, Full Thd, , BSN C225
9	300806	2	SCREW, Hex, M5 x 10, 8.8, Full Thd, , ASN D226
10	84072832	1	BRACKET,
11	9706685	23	NUT, M12, Cl 8,
12	86592701	30	WASHER, M12 x 35 x 5, HT,
13	11068376	2	RING, SNAP, M35, Ext x 1.5 Thk,
14	84072793	2	WASHER,
15	86563106	3	HUB, , BSN C315
15	87011705	3	HUB, , ASN D316
16	120044	6	BOLT, CARRIAGE, Short NK, M12 x 30, Cl8.8, Full Thd,
17	86507486	4	BOLT, CARRIAGE, Short NK, M8 x 20, Cl8.8, Full Thd,
18	84073388	1	COVER,
19	322358	4	WASHER, SPRING, Belleville, M8,
20	89706690	4	NUT, M8, Cl 8,
21	84320188	1	COVER,
22	86585939	3	WASHER,
23	327084	4	WASHER,
24	84320111	1	ELBOW, , BSN C301
24	84444393	1	ELBOW, , ASN D302
25	100020	2	NUT, M16, Cl 8,
26	84435279	1	SUPPORT,
27	86558526	1	BUSHING,
28	84073608	1	AUGER, , BSN C315
28	84447940	1	AUGER, , ASN D316
29	86584089	1	BUSHING,

16.24(01) UNLOADING AUGER, GEARBOX

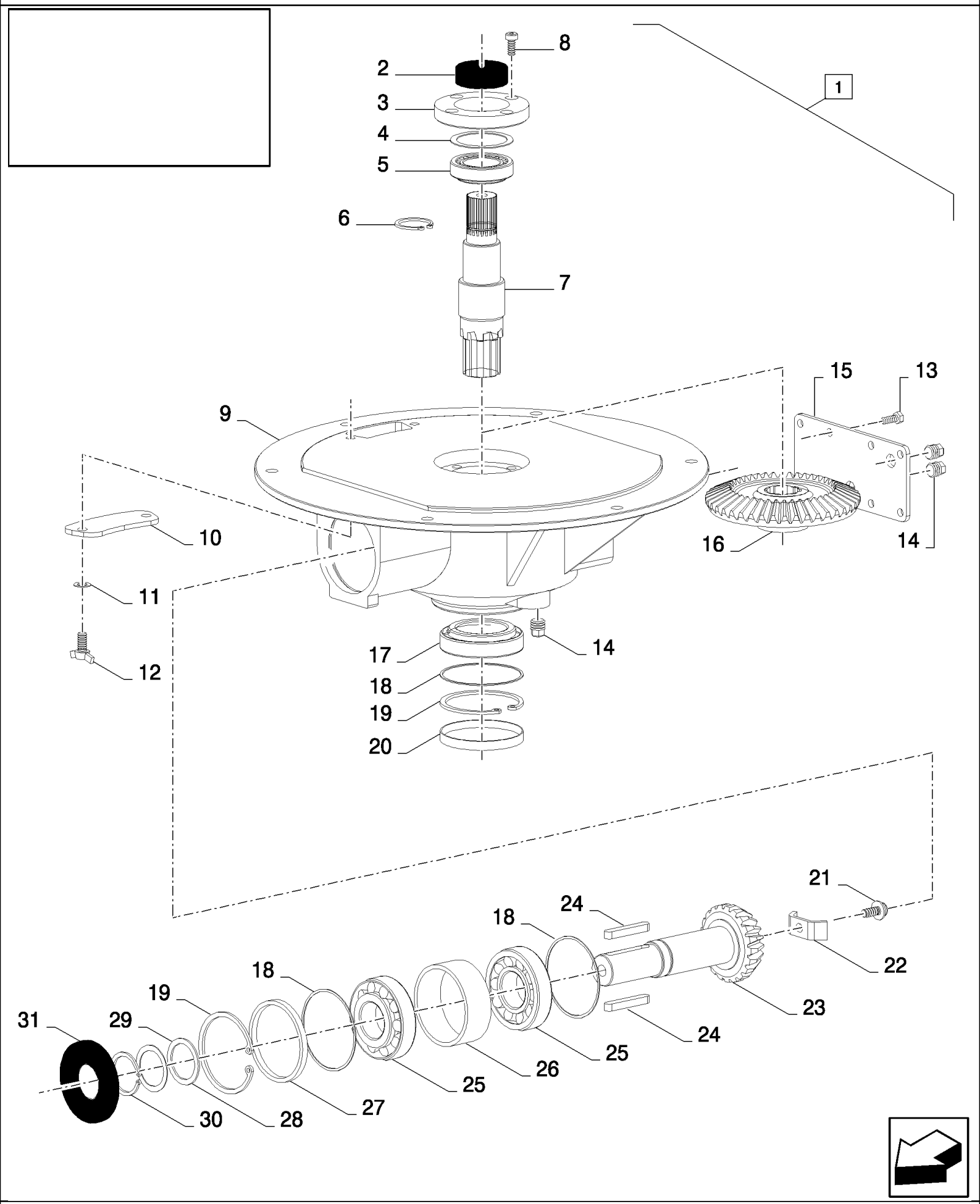

CX880 COMBINE - BASE UNIT (2/01-)

16.24(01) UNLOADING AUGER, GEARBOX

ссылка	Номер детали	Кол-во	Описание
1	84320052	1	GEARBOX, (2to31)
2	86623221	1	SEAL, RUBBER,
3	86623222	1	FLANGE,
4	86623218	1	SHIM,
5	86626475	1	BEARING, ROLLER, TAPERED,
6	11068376	1	RING, SNAP, M35, Ext x 1.5 Thk,
7	86623219	1	SHAFT,
8	86566099	4	SCREW, Hex Soc Hd, M8 x 16, 12.9, M8x16
9	86623223	1	HOUSING,
10	86623226	1	COVER,
11	9511037	2	SEALRING,
12	412049	2	SCREW,
13	120104	8	SCREW, Hex, M8 x 20, 8.8,
14	86557412	3	PLUG, , BSN C371
14	9837623	3	PLUG, , ASN D372
15	86623224	1	COVER,
16	86623225	1	GEAR, BEVEL,
17	853116	1	BEARING ASSY,
18	86623216	3	SHIM,
19	370013	2	RING, SNAP, M90, Int,
20	86623227	1	COVER,
21	9804262	1	BOLT, Hex Flg, M10 x 30, 8.8,
22	86623220	1	PLATE,
23	86623217	1	GEAR,
24	170013	1	KEY,
25	86613758	2	BEARING ASSY,
26	86623228	1	SPACER,
27	86623215	1	SPACER,
28	86623231	1	SHIM,
29	86623229	1	SHIM,
30	440442	1	RING, SNAP, M10, Ext,
31	86623230	1	SEAL,

16.25(01) UNLOADING AUGER, GEARBOX

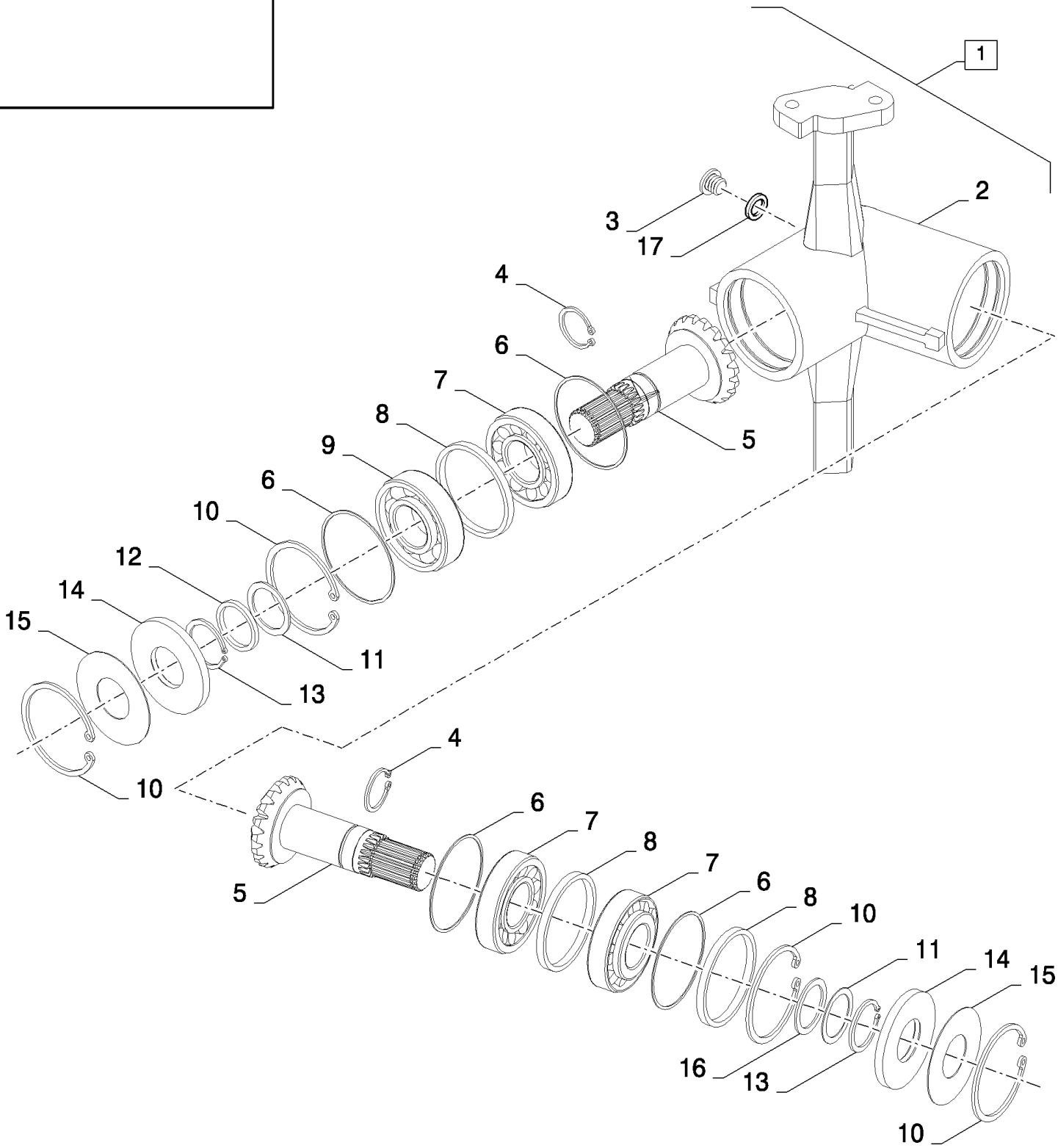

CX880 COMBINE - BASE UNIT (2/01-)

16.25(01) UNLOADING AUGER, GEARBOX

ссылка	Номер детали	Кол-во	Описание
1	84320130	1	GEARBOX, (2 to 16), BSN C479
1	87331084	1	GEARBOX, , ASN D480
2	84437089	1	HOUSING, , BSN C479
2	87331121	1	HOUSING, , ASN D480
3	84437088	1	PLUG,
4	84025665	2	CIRCLIP, , BSN C479
4	800-5155	2	RING, SNAP, , ASN D480
5	84437076	2	GEAR, BEVEL, , BSN C479
5	87331114	2	SHAFT, , ASN D480
6	84437081	4	KIT, SHIM, , BSN C479
6	87346736	4	KIT, SHIM, , ASN D480
7	86613758	3	BEARING ASSY, , BSN C479
7	26799990	3	BEARING ASSY, , ASN D480
8	86623215	3	SPACER, , BSN C479
8	87332420	3	SPACER, RING, , ASN D480
9	42543	1	BEARING, BALL, , BSN C479
9	ST265	1	BEARING, BALL, , ASN D480
10	370013	4	RING, SNAP, M90, Int, , BSN C479
10	80370026	4	CIRCLIP, , ASN D480
11	86623229	2	SHIM, , BSN C479
11	87332423	2	KIT, SHIM, , ASN D480
12	84437080	1	RING, , BSN C479
12	87345894	1	SHIM, , ASN D480
13	80370006	2	RING, SNAP, , BSN C479
13	87349260	2	CIRCLIP, , ASN D480
14	86623230	2	SEAL, , BSN C479
14	87331115	2	SEAL, , ASN D480
15	84437077	2	COVER, , BSN C479
15	87332418	2	WASHER, , ASN D480
16	84437091	1	SHIM, , BSN C479
16	87345893	1	SHIM, , ASN D480
17	89511034	1	GASKET, , ASN D480

16.26(01) UNLOADING AUGER

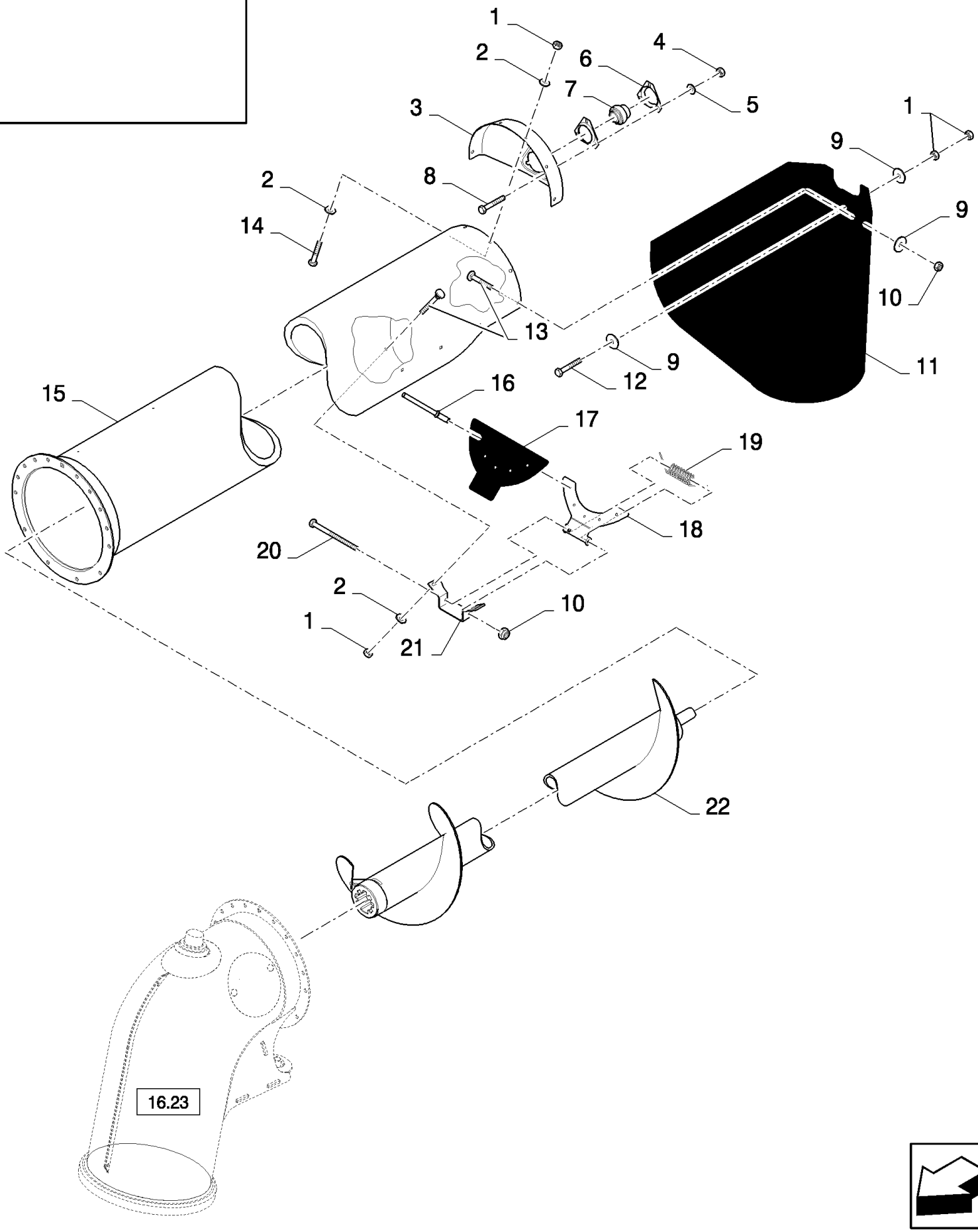

CX880 COMBINE - BASE UNIT (2/01-)

16.26(01) UNLOADING AUGER

ссылка	Номер детали	Кол-во	Описание
1	89706690	14	NUT, M8, Cl 8,
2	322358	10	WASHER, SPRING, Belleville, M8,
3	84075462	1	COVER,
4	100016	3	NUT, M10, Cl 8,
5	140045	3	WASHER, SPRING, Belleville, M10,
6	84320112	1	SET,
7	84069440	1	BEARING, BALL,
8	338949	3	BOLT, CARRIAGE, Short NK, M10 x 25, Cl8.8, Full Thd,
9	322	18	WASHER,
10	86629542	11	NUT, LOCK, M8 x 1.25, Cl 8,
11	84064911	1	SPOUT, DISCHARGE,
12	43128	4	BOLT, Hex, M8 x 30, 8.8,
13	86507486	12	BOLT, CARRIAGE, Short NK, M8 x 20, Cl8.8, Full Thd,
14	120104	4	SCREW, Hex, M8 x 20, 8.8,
15	84071578	1	TUBE, , BSN C415
15	84457972	1	TUBE, , ASN D416
16	325911	5	RIVET, Pop, M4.8 x 7.4,
17	84434535	1	SEAL,
18	84069871	1	SUPPORT,
19	84320110	1	SPRING,
20	86528166	1	BOLT, Hex, M8 x 120, 8.8, M8x120
21	84069872	1	SUPPORT,
22	84073843	1	AUGER, , BSN C315
22	84447941	1	AUGER, , ASN D316

16.27(01) UNLOADING AUGER, EXTENSION 0.9M

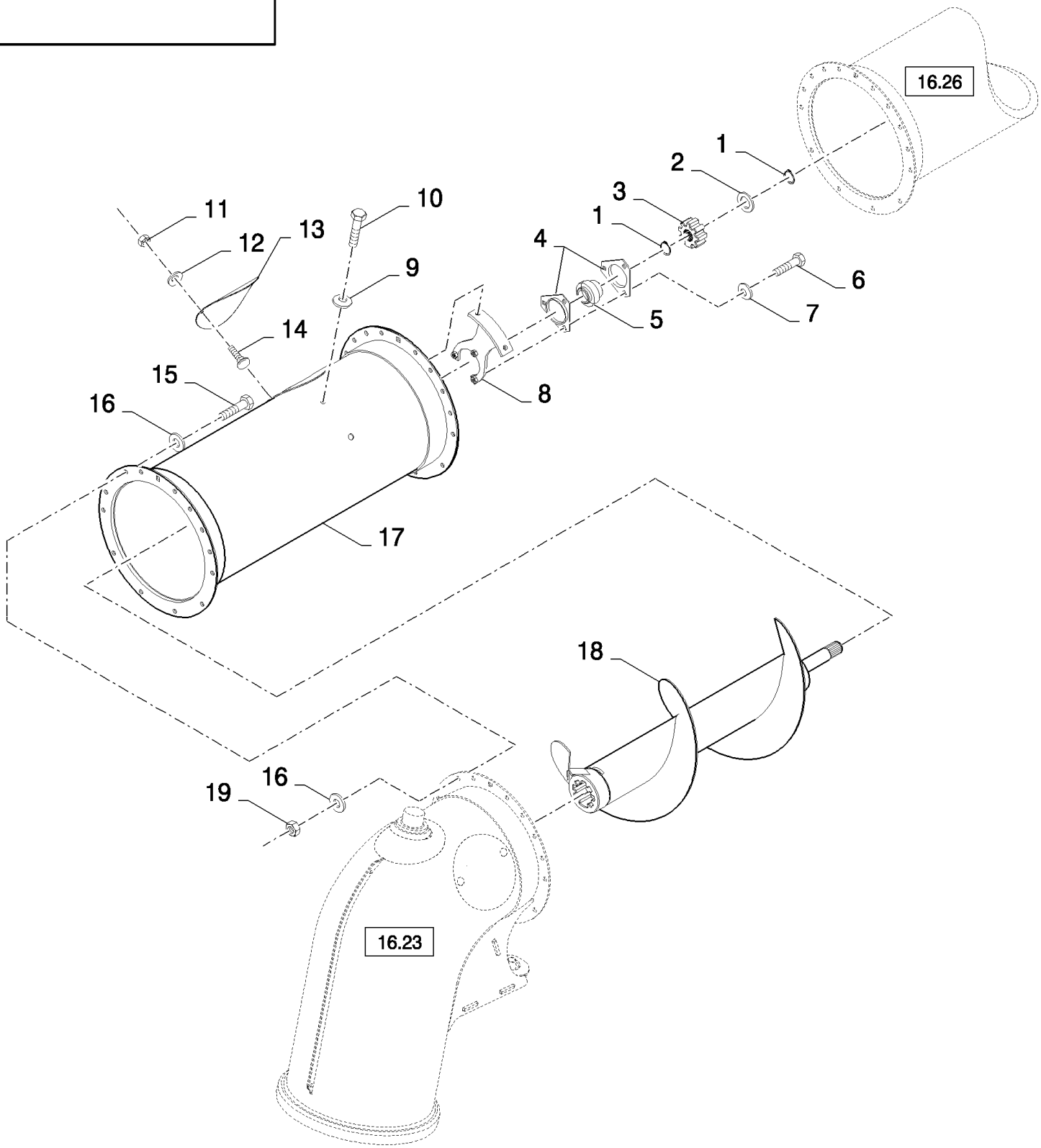

CX880 COMBINE - BASE UNIT (2/01-)

16.27(01) UNLOADING AUGER, EXTENSION 0.9M

ссылка	Номер детали	Кол-во	Описание
1	11068376	2	RING, SNAP, M35, Ext x 1.5 Thk,
2	84072793	1	WASHER,
3	86563106	1	HUB, , BSN C315
3	87011705	1	HUB, , ASN D316
4	86574241	2	FLANGE, , BSN C309
4	84814939	2	FLANGE, , ASN D310
5	212606	1	BEARING ASSY, , BSN C301
5	84814912	1	BEARING, BALL, , ASN D302
6	43140	3	BOLT, Hex, M10 x 30, 8.8, Full Thd,
7	140045	3	WASHER, SPRING, Belleville, M10,
8	84072623	1	SUPPORT,
9	140046	2	WASHER, Belleville, M12,
10	300388	2	SCREW, Hex, M12 x 25, 8.8,
11	89706690	2	NUT, M8, Cl 8,
12	322358	2	WASHER, SPRING, Belleville, M8,
13	84072843	1	COVER, , BSN C479
13	84461051	1	COVER ASSY, , ASN D480
14	86507486	2	BOLT, CARRIAGE, Short NK, M8 x 20, Cl8.8, Full Thd, , BSN C479
14	80308761	2	SCREW, , ASN D480
15	9706687	15	SCREW, Hex, M12 x 30, 8.8,
16	394630	30	WASHER, 12MM
17	84073116	1	TUBE, , BSN C301
17	84444391	1	TUBE, , ASN D302
18	84072801	1	AUGER, , BSN C315
18	84447939	1	AUGER, , ASN D316
19	9706685	15	NUT, M12, Cl 8,

16.28(01) CLUTCH

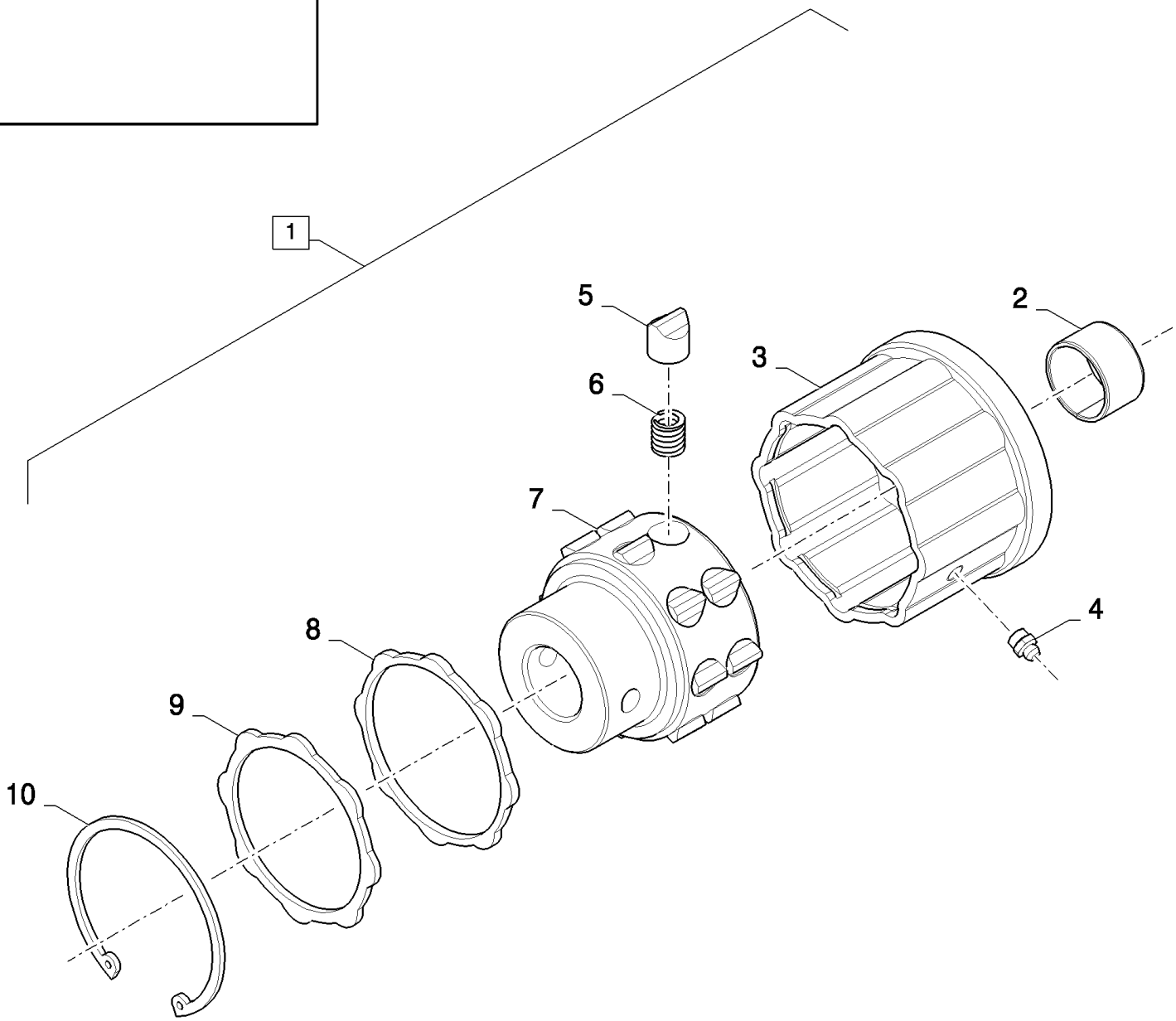

CX880 COMBINE - BASE UNIT (2/01-)

16.28(01) CLUTCH

ссылка	Номер детали	Кол-во	Описание
1	84442561	1	CLUTCH, (2 to 10)
2	210077	1	SLEEVE,
3	NSS	1	NOT SERVICED SEPARATELY,
4	84447449	1	NIPPLE, LUBE,
5	386509	16	CAM,
6	386510	16	SPRING,
7	84447383	1	HUB,
8	84447415	1	RING,
9	418509	1	RING,
10	80300633	1	RING, SNAP,

CX880 COMBINE - BASE UNIT (2/01-)

16.29(01) GRAIN TANK, BOTTOM - WEAR KIT

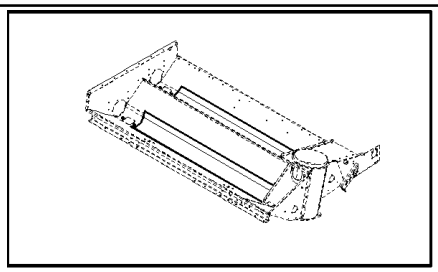

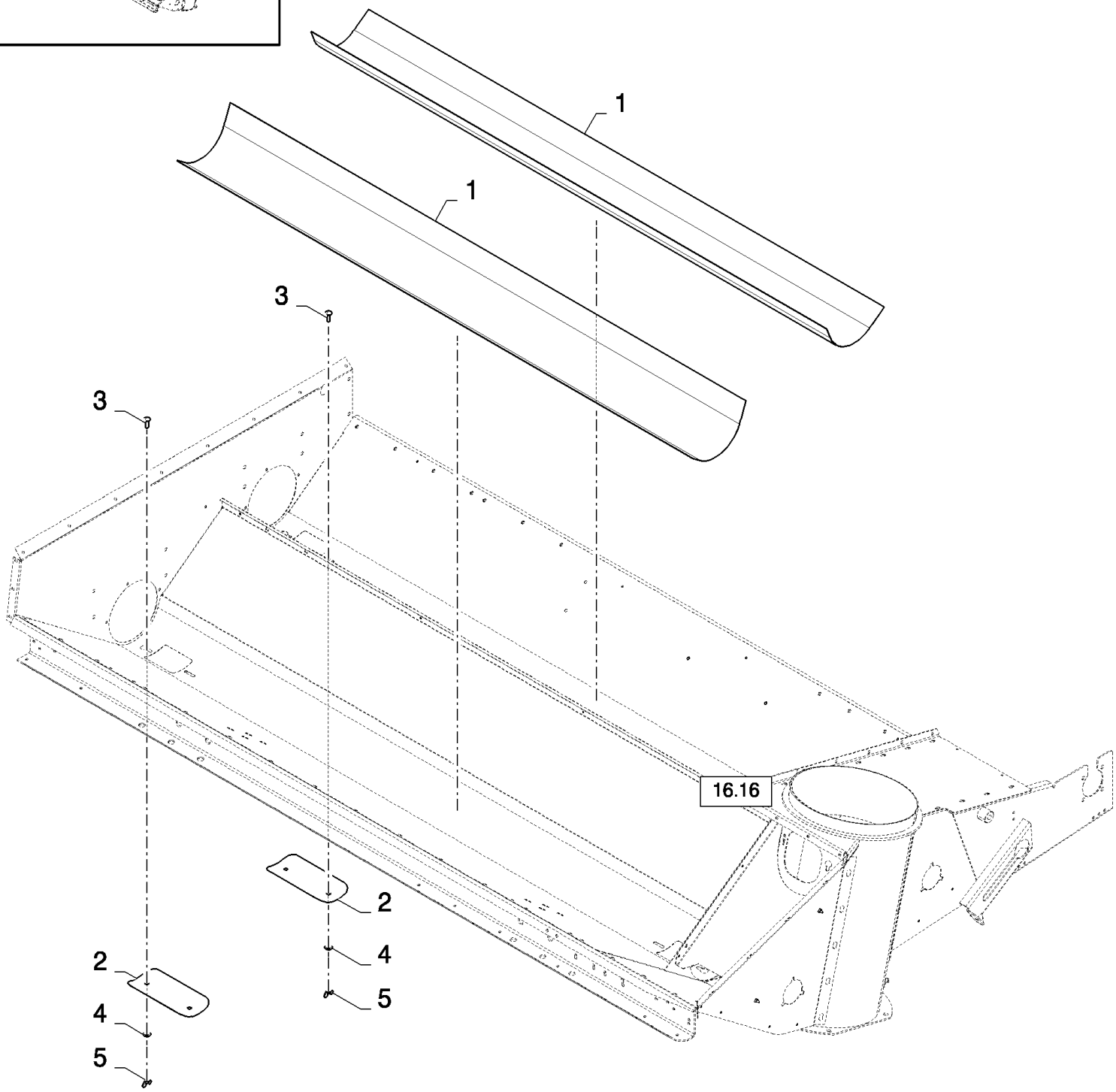

CX880 COMBINE - BASE UNIT (2/01-)

16.29(01) GRAIN TANK, BOTTOM - WEAR KIT

ссылка	Номер детали	Кол-во	Описание
1	87315123	2	FLOOR,
2	84455905	2	COVER ASSY,
3	86512446	4	BOLT, CARRIAGE, Short NK, M10 x 30, Cl8.8, Full Thd,
4	140018	4	WASHER, M12 x 24 x 2.5,
5	84814893	4	NUT, WING, M10 x 1.5,
6	87315124	1	

ACCESSORIES	ACCESSOIRES	ACCESORIOS	TILBEHØR
ACCESSORI	ZUBEHÖR	ACESSORIOS	TOEBEHOREN

SEC. 18

ACCESSORIES

ссылка	Номер детали	Кол-во	Описание

ATTACHMENTS	**ACCESSOIRES**	**ACCESORIO**	**UDSTYR**
ACCESSORIO	**ZUBEHÖR**	**EQUIPAMENTOS**	**HULPSTUKKEN**

SEC. 19

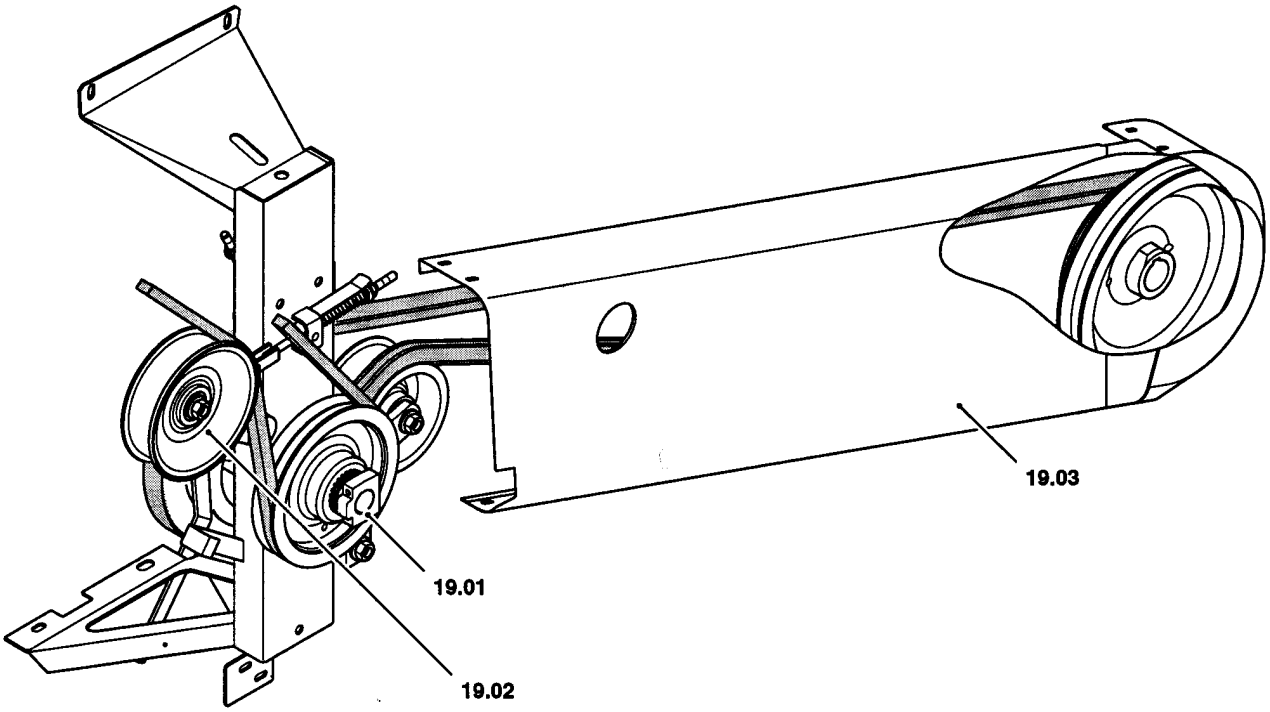

ссылка	Номер детали	Кол-во	Описание

ATTACHMENTS	**ACCESSOIRES**	**ACCESORIO**	**UDSTYR**
ACCESSORIO	**ZUBEHÖR**	**EQUIPAMENTOS**	**HULPSTUKKEN**

SEC. 19

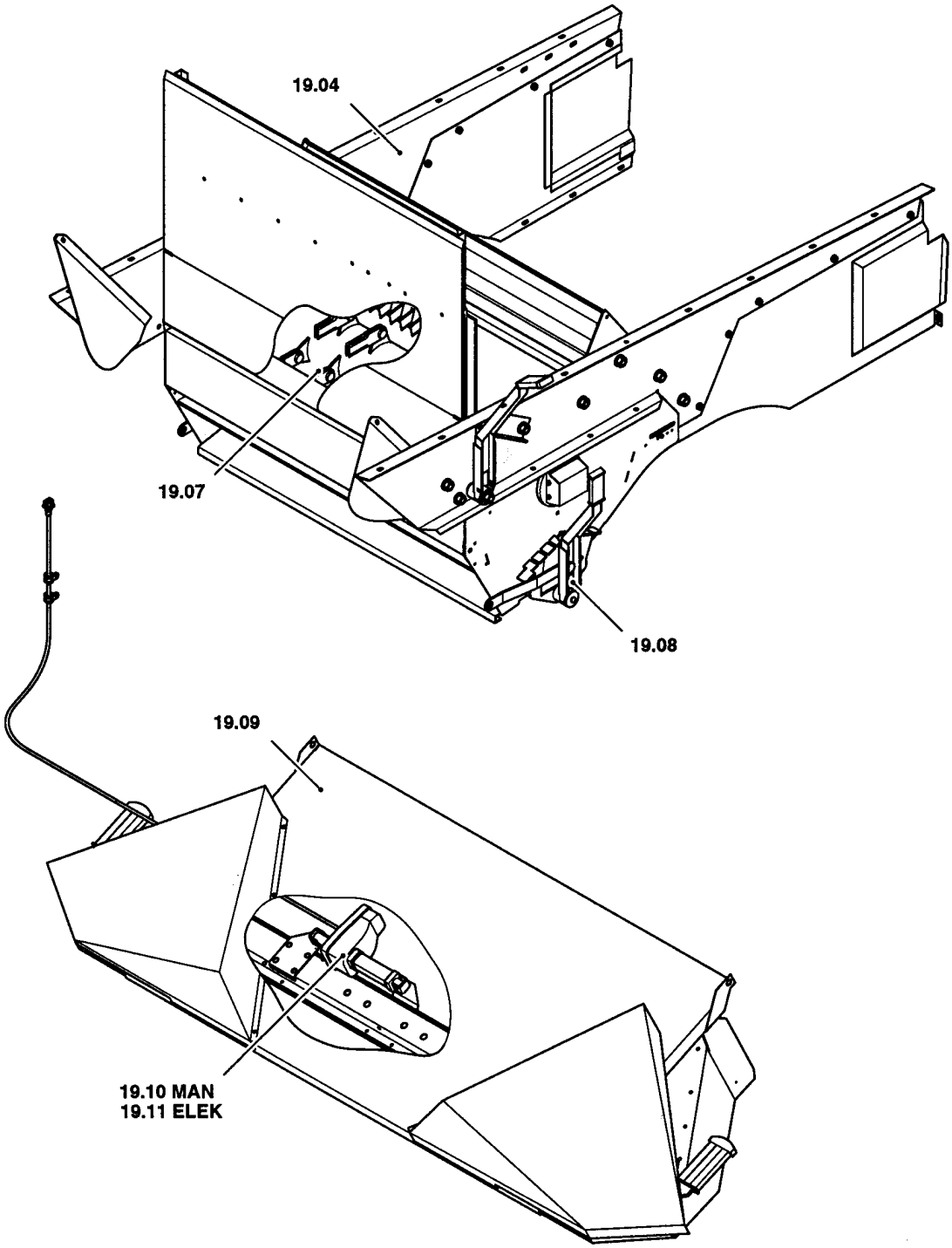

ссылка	Номер детали	Кол-во	Описание

ATTACHMENTS	**ACCESSOIRES**	**ACCESORIO**	**UDSTYR**
ACCESSORIO	**ZUBEHÖR**	**EQUIPAMENTOS**	**HULPSTUKKEN**

SEC. 19

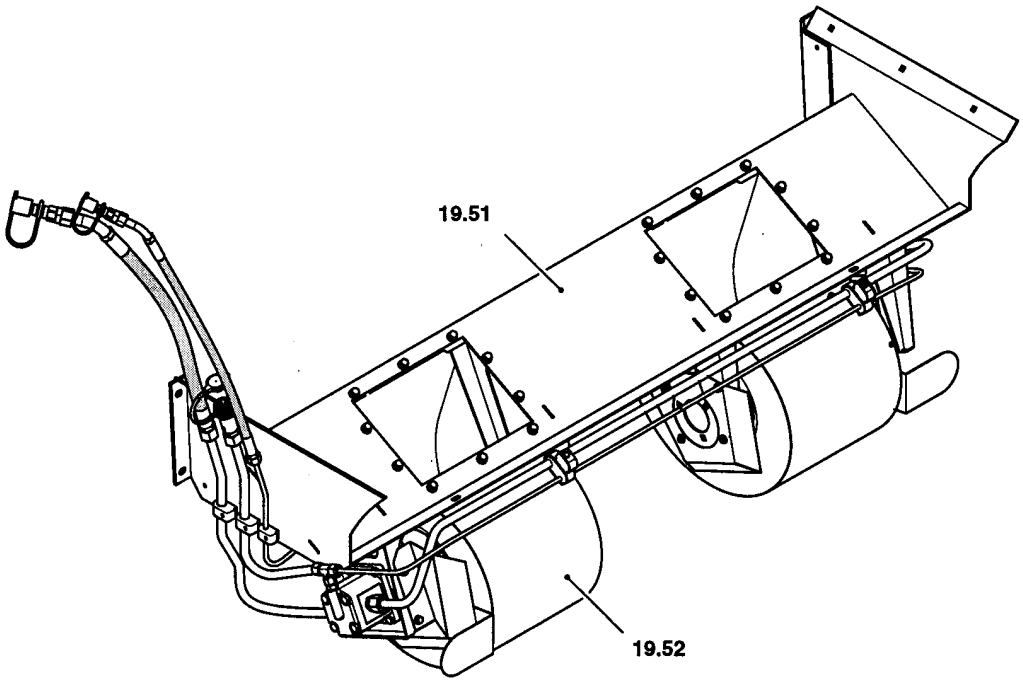

ссылка	Номер детали	Кол-во	Описание

19.01(01) CHOPPER DRIVE

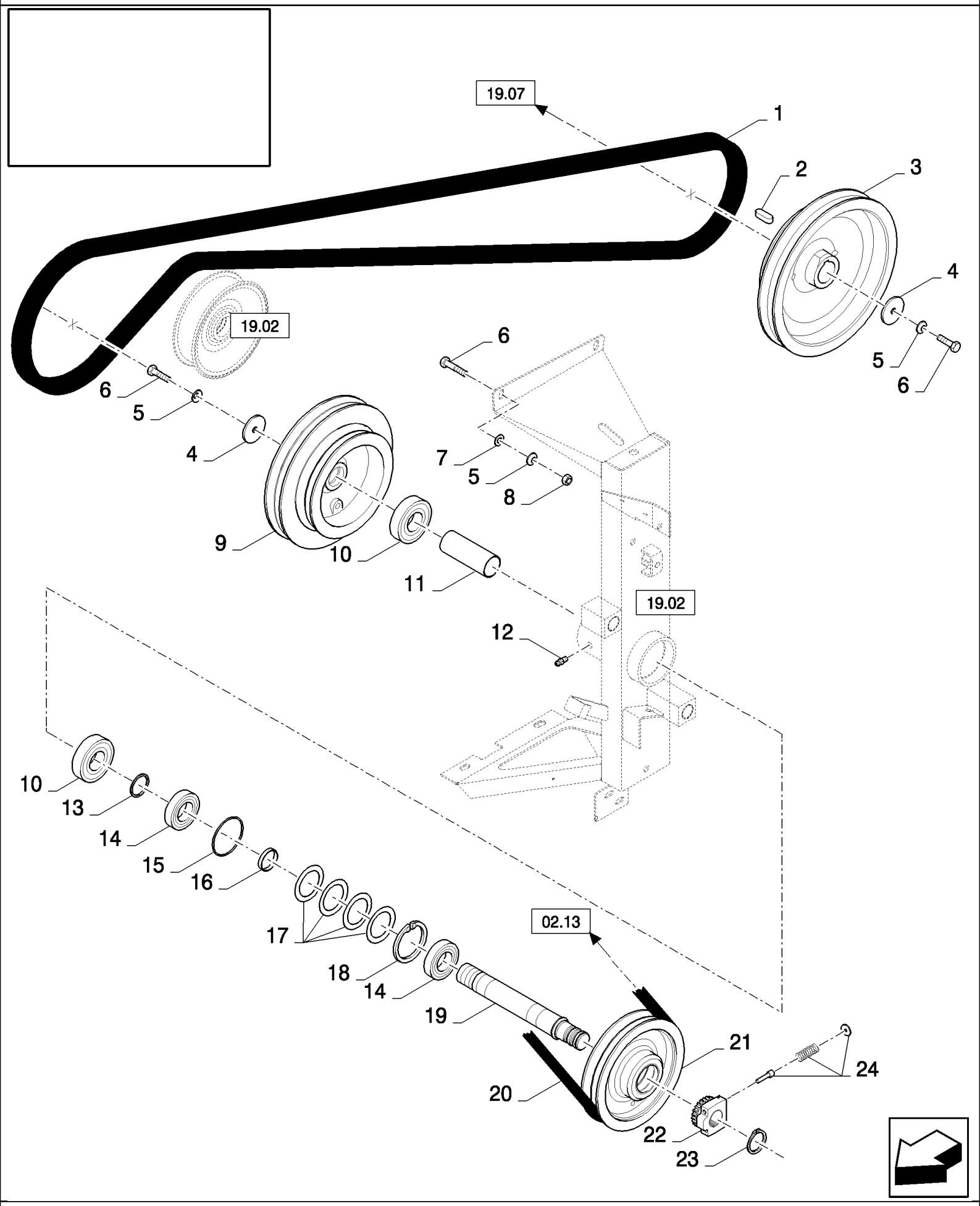

CX880 COMBINE - BASE UNIT (2/01-)

19.01(01) CHOPPER DRIVE

ссылка	Номер детали	Кол-во	Описание
1	84075635	1	BELT, TRANSMISSION,
2	323624	1	KEY,
3	84076337	1	PULLEY, , BSN C407
3	84454697	1	PULLEY, , ASN D408
4	84989368	2	WASHER,
5	140046	4	WASHER, Belleville, M12,
6	9706687	4	SCREW, Hex, M12 x 30, 8.8,
7	378245	2	WASHER, M12,
8	9706685	2	NUT, M12, Cl 8,
9	84071640	1	PULLEY, , BSN C407
9	84454714	1	PULLEY, , ASN D408
10	412718	2	BEARING ASSY,
11	84064471	1	BUSHING,
12	321204	1	NIPPLE, LUBE, M6 x 1, 16mm lg,
13	84989367	1	SPACER,
14	353125	2	BEARING, BALL,
15	84064605	1	O-RING,
16	84064506	1	BUSHING,
17	84064489	4	SPRING-DISC,
18	370021	1	RING, SNAP, M85 x 3, Int,
19	84064458	1	COUNTERSHAFT,
20	84075345	1	BELT, TRANSMISSION,
21	84071892	1	PULLEY,
22	84072920	1	RING, COUPLING, , BSN C253
22	84441243	1	RING, COUPLING, , ASN D254
23	440442	1	RING, SNAP, M10, Ext,
24	744051	1	KIT, , BSN C253

19.02(01) CHOPPER DRIVE IDLERS

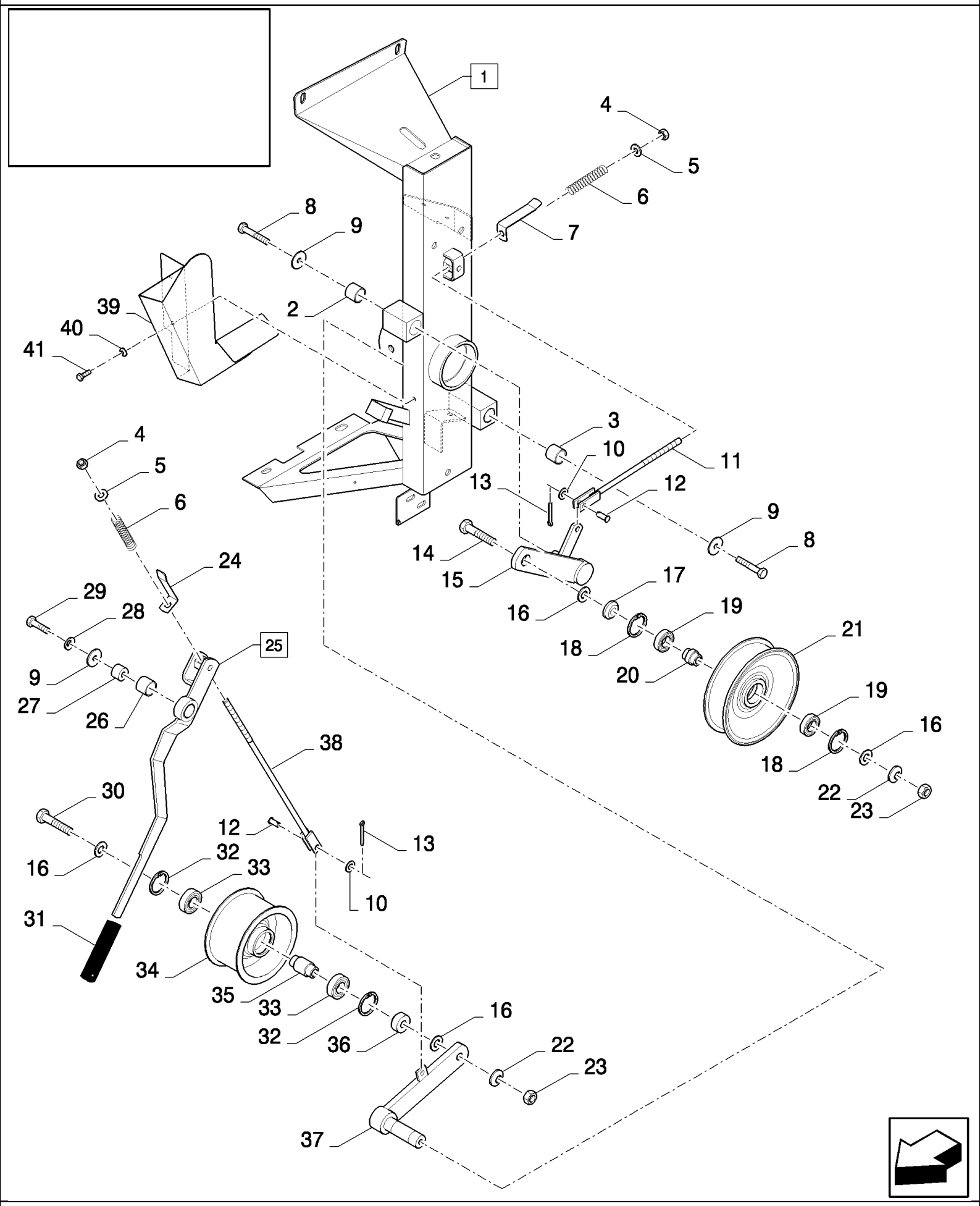

CX880 COMBINE - BASE UNIT (2/01-)

19.02(01) CHOPPER DRIVE IDLERS

ссылка	Номер детали	Кол-во	Описание
1	84072145	1	SUPPORT, (2,3)
2	84057311	2	SLEEVE,
3	420434	2	BUSHING,
4	412126	2	NUT, LOCK, M12 x 1.75, Cl 8,
5	378245	2	WASHER, M12,
6	337829	1	SPRING,
7	84076001	1	INDICATOR,
8	43138	2	SCREW, Hex, M10 x 20, 8.8, Full Thd,
9	140082	3	WASHER,
10	378244	2	WASHER, M10,
11	80455661	1	ROD,
12	322901	2	PIN,
13	130004	2	PIN, SPLIT (COTTER), M3.2 x 25,
14	120093	1	BOLT, Hex, M16 x 80, 8.8,
15	84075380	1	LEVER,
16	378246	4	WASHER, 16MM
17	84073740	1	BUSHING,
18	300647	2	RING, SNAP, M47, Int,
19	58260	2	BEARING ASSY,
20	84064427	1	BUSHING,
21	84075518	1	PULLEY,
22	140048	2	WASHER, SPRING, Belleville, M16,
23	100020	2	NUT, M16, Cl 8,
24	84075998	1	INDICATOR,
25	84989240	1	LEVER, (26)
26	420434	1	BUSHING,
27	84989223	1	BUSHING,
28	140045	1	WASHER, SPRING, Belleville, M10,
29	120112	1	BOLT, Hex, M10 x 40, 8.8, Full Thd,
30	321246	1	BOLT, Hex, M16 x 120, 8.8,
31	357545	1	HANDLE GRIP,
32	370011	2	RING, SNAP, M52, Int,
33	84057966	2	BEARING, BALL, , BSN C245
33	443898	2	BEARING, BALL, , ASN D246
34	84076384	1	PULLEY,
35	84075426	1	BUSHING,
36	84004688	1	BUSHING,
37	84075531	1	LEVER,
38	84989205	1	ROD, ADJUSTMENT,
39	84440710	1	SHIELD,
40	412650	2	WASHER, Belleville, M8,
41	120104	2	SCREW, Hex, M8 x 20, 8.8,

19.03(01) CHOPPER DRIVE, SHIELDS

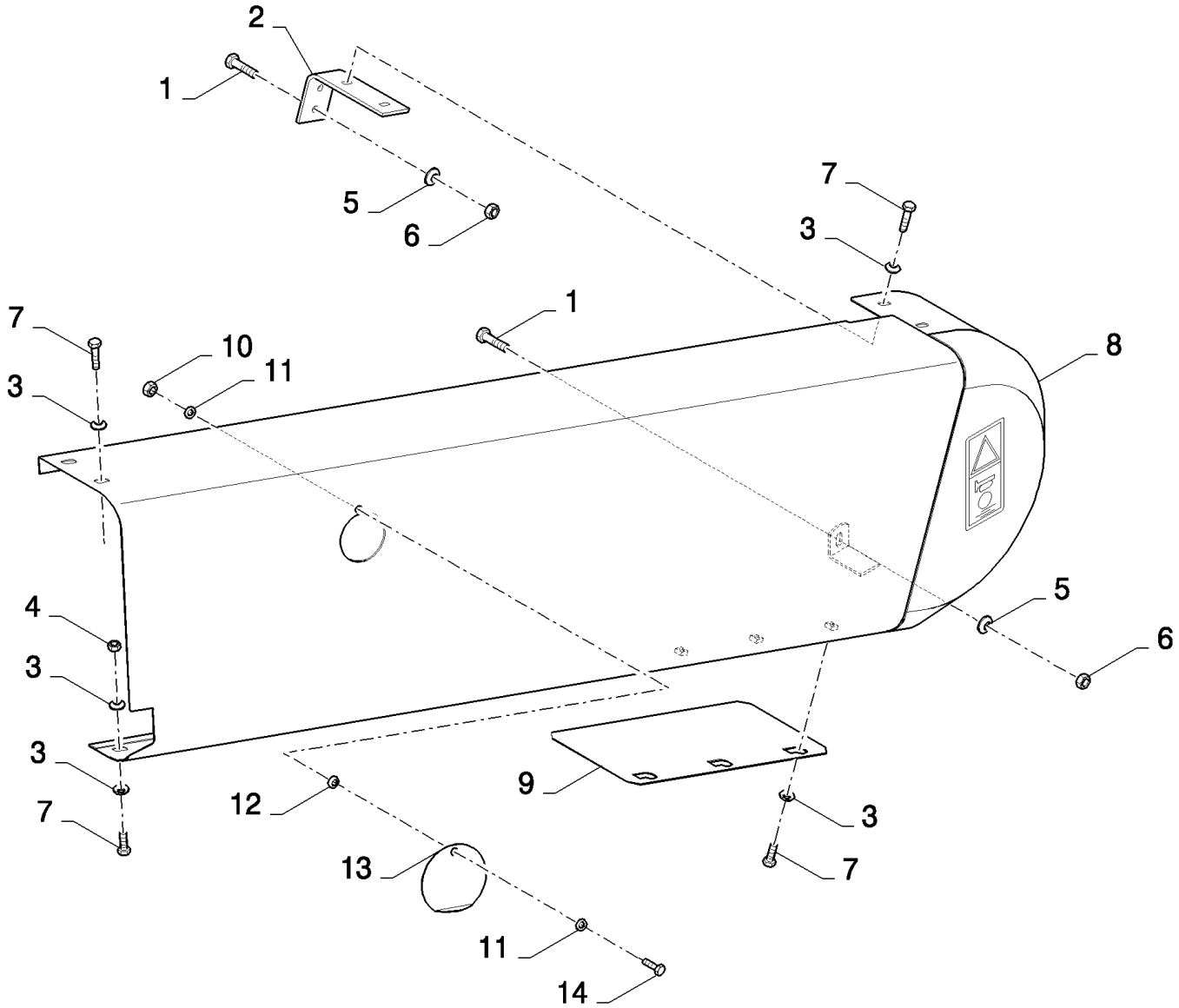

CX880 COMBINE - BASE UNIT (2/01-)

19.03(01) CHOPPER DRIVE, SHIELDS

ссылка	Номер детали	Кол-во	Описание
1	43139	3	SCREW, Hex, M10 x 25, 8.8, Full Thd, M10x25, BSN C225
1	338949	3	BOLT, CARRIAGE, Short NK, M10 x 25, Cl8.8, Full Thd, , ASN D226
2	84989647	1	BRACKET,
3	412650	9	WASHER, Belleville, M8,
4	89706690	1	NUT, M8, Cl 8,
5	140045	3	WASHER, SPRING, Belleville, M10,
6	100016	3	NUT, M10, Cl 8,
7	120104	8	SCREW, Hex, M8 x 20, 8.8,
8	84989605	1	SHIELD,
9	84076366	1	PLATE,
10	353308	1	NUT, M6 x 1, Cl 8,
11	86588450	2	WASHER, M6,
12	300366	1	WASHER,
13	84437160	1	COVER,
14	86508568	1	SCREW, Hex, M6 x 16, 8.8,

19.04(01) CHOPPER SHIELDS

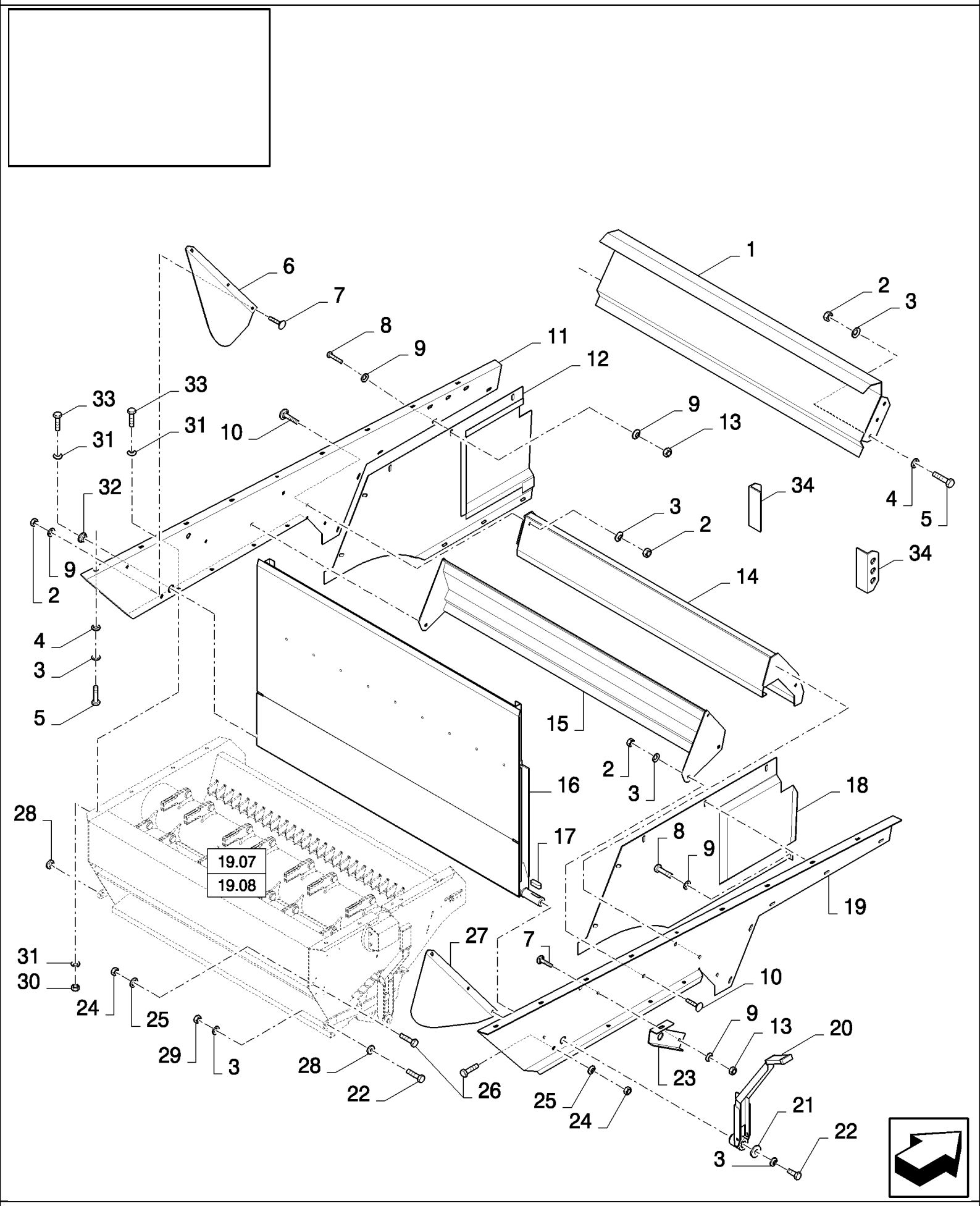

CX880 COMBINE - BASE UNIT (2/01-)

19.04(01) CHOPPER SHIELDS

ссылка	Номер детали	Кол-во	Описание
1	84437293	1	PLATE, , FOR CX820, CX840, CX860, CX880 ONLY, BSN C407
1	84800935	1	PLATE, , FOR CX820, CX840, CX860, CX880 ONLY, ASN D408
1	84437386	1	PLATE, , FOR CX720, CX740, CX760, CX780 ONLY, BSN C407
1	84800937	1	PLATE, , FOR CX720, CX740, CX760, CX780 ONLY, ASN D408
2	100016	14	NUT, M10, Cl 8,
3	140045	35	WASHER, SPRING, Belleville, M10,
4	140017	24	WASHER, M10 x 20 x 2,
5	43139	24	SCREW, Hex, M10 x 25, 8.8, Full Thd, M10x25
6	84437291	1	PLATE,
7	86507486	6	BOLT, CARRIAGE, Short NK, M8 x 20, Cl8.8, Full Thd,
8	120104	14	SCREW, Hex, M8 x 20, 8.8,
9	322358	29	WASHER, SPRING, Belleville, M8,
10	338949	8	BOLT, CARRIAGE, Short NK, M10 x 25, Cl8.8, Full Thd,
11	84437296	1	PLATE,
12	84437295	1	PLATE,
13	89706690	15	NUT, M8, Cl 8,
14	84437279	1	PLATE, , FOR CX820, CX840, CX860, CX880 ONLY
14	84437387	1	PLATE, , FOR CX720, CX740, CX760, CX780 ONLY
15	84437292	1	PLATE, , FOR CX820, CX840, CX860, CX880 ONLY, BSN C407
15	84800936	1	PLATE, , FOR CX820, CX840, CX860, CX880 ONLY, ASN D408
15	84437388	1	PLATE, , FOR CX720, CX740, CX760, CX780 ONLY, BSN C407
15	84800938	1	PLATE, , FOR CX720, CX740, CX760, CX780 ONLY, ASN D408
16	84437289	1	DEFLECTOR, , FOR CX820, CX840, CX860, CX880 ONLY
16	84441336	1	DEFLECTOR, , FOR CX820, CX840, CX860, CX880 ONLY, FOR SMALL GRAIN ONLY
16	84437390	1	DEFLECTOR, , FOR CX720, CX740, CX760, CX780 ONLY
16	84441388	1	DEFLECTOR, , FOR CX720, CX740, CX760, CX780 ONLY, FOR SMALL GRAIN ONLY
17	170030	1	KEY, M8 x 7 x 32, Par,
18	84437283	1	PLATE,
19	84437286	1	PLATE,
20	84437281	1	LEVER,
21	84437280	1	WASHER,
22	43140	3	BOLT, Hex, M10 x 30, 8.8, Full Thd,
23	84437284	1	STOP,
24	100038	4	NUT, M12 x 1.75, Cl 8,
25	140018	4	WASHER, M12 x 24 x 2.5,
26	86629541	4	BOLT, Hex, M12 x 40, 8.8, Full Thd,
27	84437290	1	PLATE,
28	84437287	2	BUSHING,
29	100037	2	NUT, M10 x 1.5, Cl 8,
30	9706685	8	NUT, M12, Cl 8,
31	140046	17	WASHER, Belleville, M12,
32	84437297	1	BUSHING,
33	9706687	9	SCREW, Hex, M12 x 30, 8.8,
34	84441334	2	STOP, , FOR SMALL GRAIN ONLY

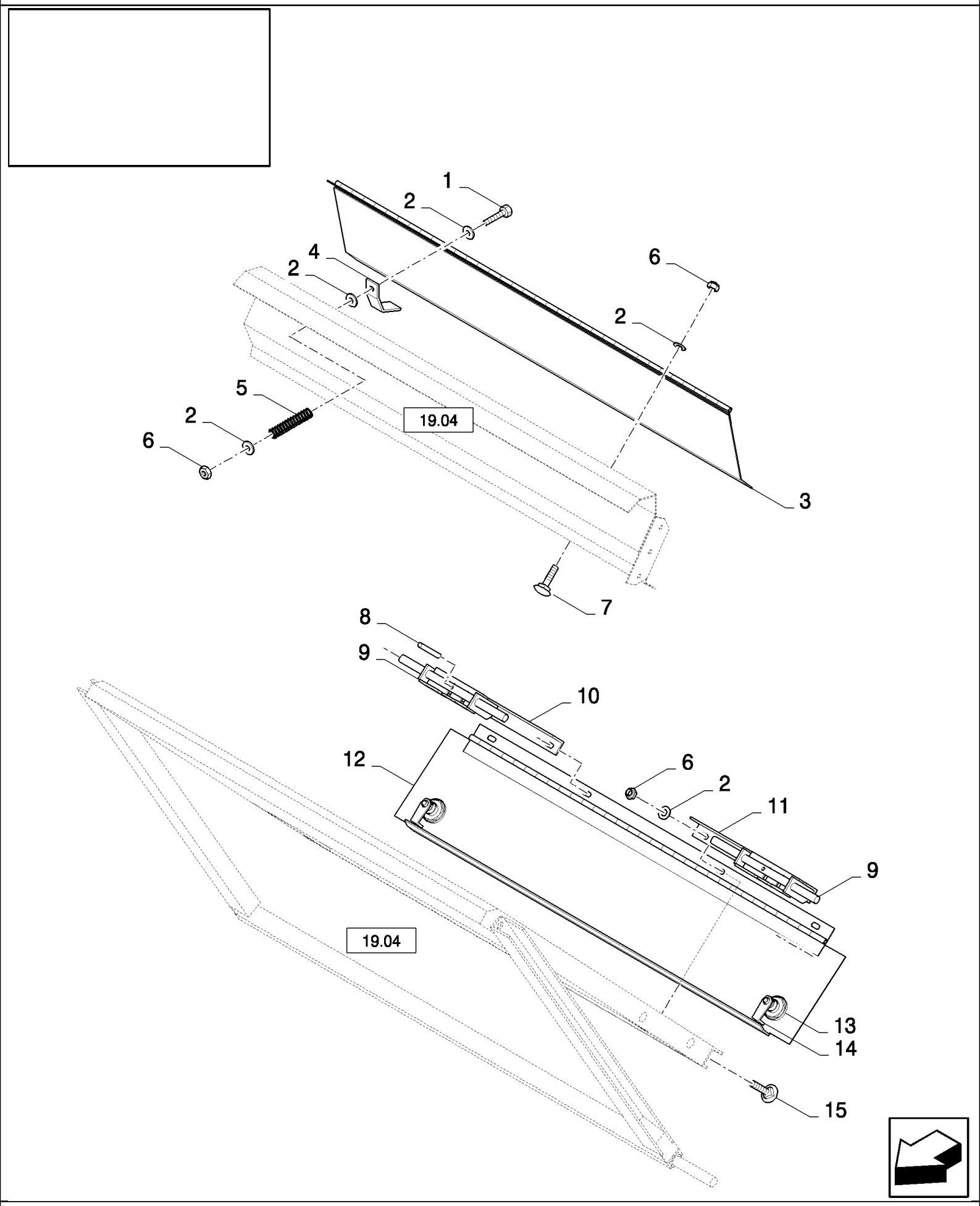
1
2
4
2
6
2
5
2
6
19.04
3
7
8
9
10
12
6
2
11
9
19.04
13
14
15

CX880 COMBINE - BASE UNIT (2/01-)

19.05(01) CORN EQUIPMENT

ссылка	Номер детали	Кол-во	Описание
1	43130	2	BOLT, Hex, M8 x 50, 8.8,
2	80394628	AR	WASHER, LOCK,
3	84439725	1	DOOR, , FOR CX720, CX740, CX760, CX780 ONLY, BSN C407
3	84439562	1	DOOR, , FOR CX820, CX840, CX860, CX880 ONLY, BSN C407
4	84439561	2	CLIP, , BSN C407
5	84437704	2	SPRING,
6	86629542	AR	NUT, LOCK, M8 x 1.25, Cl 8,
7	86507486	AR	BOLT, CARRIAGE, Short NK, M8 x 20, Cl8.8, Full Thd,
8	333960	2	PIN, LOCK, M6 x 50, Slotted,
9	84439563	2	ROD,
10	84439568	1	SUPPORT,
11	84439567	1	SUPPORT,
12	84439726	1	DOOR, , FOR CX720, CX740, CX760, CX780 ONLY
12	84439569	1	DOOR, , FOR CX820, CX840, CX860, CX880 ONLY
13	338206	2	WASHER,
14	84439570	2	LOCK,
15	308761	AR	BOLT, CARRIAGE, Short NK, M8 x 25, Cl8.8, Full Thd,

19.06(01) CORN EQUIPMENT FOR SMALL GRAIN CHOPPER

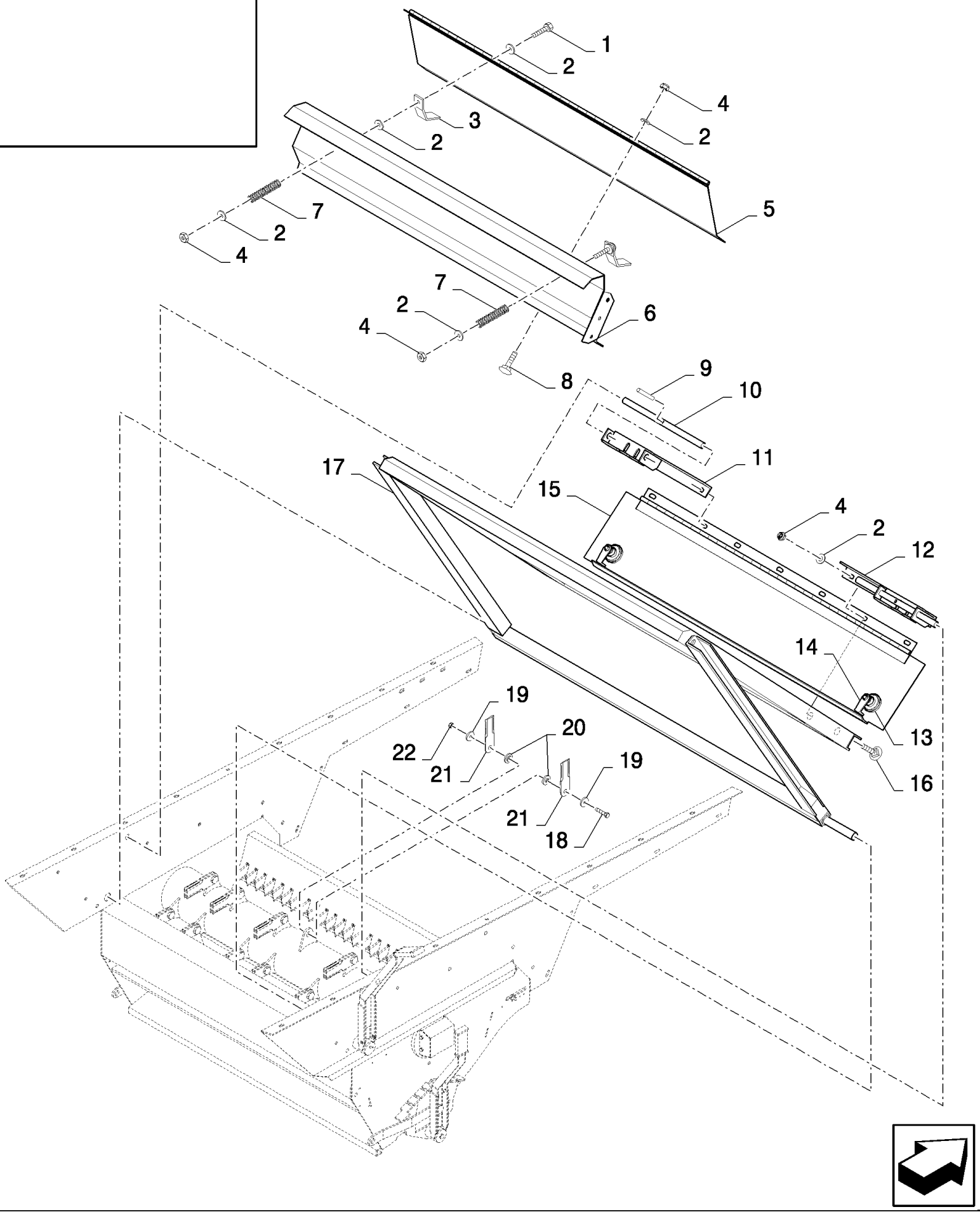

CX880 COMBINE - BASE UNIT (2/01-)

19.06(01) CORN EQUIPMENT FOR SMALL GRAIN CHOPPER

ссылка	Номер детали	Кол-во	Описание
1	43130	2	BOLT, Hex, M8 x 50, 8.8,
2	80394628	AR	WASHER, LOCK,
3	84439561	2	CLIP,
4	86629542	AR	NUT, LOCK, M8 x 1.25, Cl 8,
5	84439725	1	DOOR, , FOR CX720, CX740, CX760, CX780 ONLY
5	84439562	1	DOOR, , FOR CX820, CX840, CX860, CX880 ONLY
6	84437386	1	PLATE, , FOR CX720, CX740, CX760, CX780 ONLY, BSN C407
6	84800937	1	PLATE, , FOR CX720, CX740, CX760, CX780 ONLY, ASN D408
6	84437293	1	PLATE, , FOR CX820, CX840, CX860, CX880 ONLY, BSN C407
6	84800935	1	PLATE, , FOR CX820, CX840, CX860, CX880 ONLY, ASN D408
7	84437704	2	SPRING,
8	86507486	AR	BOLT, CARRIAGE, Short NK, M8 x 20, Cl8.8, Full Thd,
9	333960	2	PIN, LOCK, M6 x 50, Slotted,
10	84439563	2	ROD,
11	84439568	1	SUPPORT,
12	84439567	1	SUPPORT,
13	338206	2	WASHER,
14	84439570	2	LOCK,
15	84439726	1	DOOR, , FOR CX720, CX740, CX760, CX780 ONLY
15	84439569	1	DOOR, , FOR CX820, CX840, CX860, CX880 ONLY
16	308761	AR	BOLT, CARRIAGE, Short NK, M8 x 25, Cl8.8, Full Thd,
17	84437390	1	DEFLECTOR, , FOR CX720, CX740, CX760, CX780 ONLY
17	84437289	1	DEFLECTOR, , FOR CX820, CX840, CX860, CX880 ONLY
18	84437627	AR	BOLT, Hex, M10 x 55, 10.9,
19	84437625	AR	WASHER,
20	84437622	AR	BUSHING,
21	84437624	AR	KNIFE,
22	86512554	AR	NUT, LOCK, M10 x 1.5, Cl 10,

19.07(01) CHOPPER, ROTOR

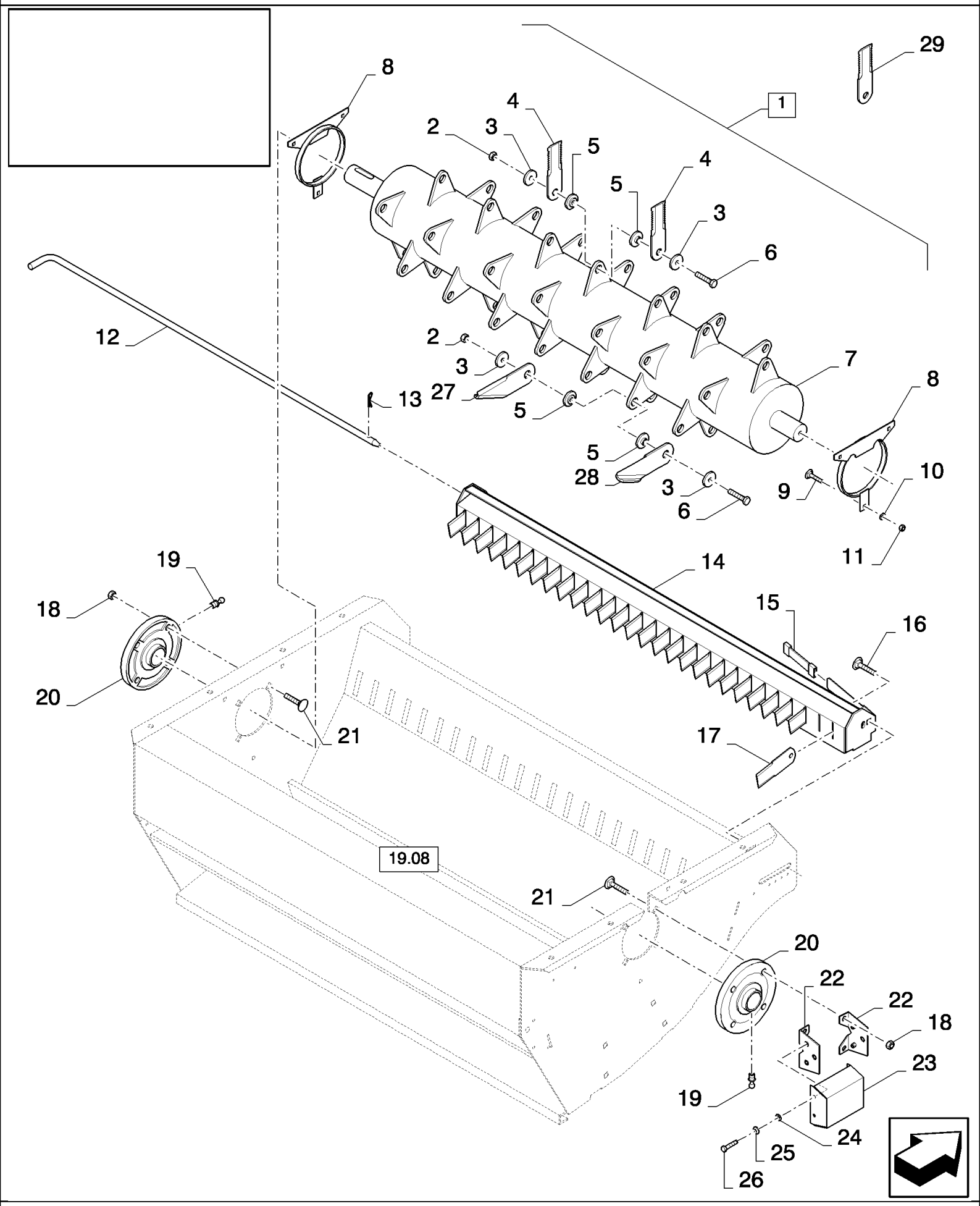

CX880 COMBINE - BASE UNIT (2/01-)

19.07(01) CHOPPER, ROTOR

ссылка	Номер детали	Кол-во	Описание
1	84437736	1	ROTOR, (2to7), FOR ROTOR WITH 76 KNIVES, FOR CX720, CX740, CX760, CX780 ONLY
1	84437621	1	ROTOR, (2to7), FOR CX720, CX740, CX760, CX780 ONLY, FOR ROTOR WITH 56 KNIVES
1	84441396	1	ROTOR, (2to7), FOR ROTOR WITH 56 KNIVES, FOR CX720, CX740, CX760, CX780 ONLY, FOR SMALL GRAIN ONLY
1	84437721	1	ROTOR, (2to7), FOR CX820, CX840, CX860, CX880 ONLY, FOR ROTOR WITH 68 KNIVES
1	84437735	1	ROTOR, (2to7), FOR CX820, CX840, CX860, CX880 ONLY, FOR ROTOR WITH 92 KNIVES
1	84441390	1	ROTOR, (2to7), FOR CX820, CX840, CX860, CX880 ONLY, FOR ROTOR WITH 68 KNIVES, FOR SMALL GRAIN ONLY
2	86512554	AR	NUT, LOCK, M10 x 1.5, Cl 10, M10
3	84437625	AR	WASHER,
3	84441391	AR	WASHER, , FOR SMALL GRAIN ONLY
4	84437624	AR	KNIFE,
4	84441392	AR	KNIFE, , FOR SMALL GRAIN ONLY
5	84437622	AR	BUSHING,
5	84441393	AR	BUSHING, , FOR SMALL GRAIN ONLY
6	84437627	AR	BOLT, Hex, M10 x 55, 10.9, M10 x 55
6	84441394	AR	SCREW, M10 x 52, FOR SMALL GRAIN ONLY
7	NSS	1	NOT SERVICED SEPARATELY, ROTOR
8	84437626	2	RING,
9	86507486	6	BOLT, CARRIAGE, Short NK, M8 x 20, Cl8.8, Full Thd,
9	86507486	6	BOLT, CARRIAGE, Short NK, M8 x 20, Cl8.8, Full Thd, , FOR SMALL GRAIN ONLY
10	80394628	6	WASHER, LOCK,
11	86629542	6	NUT, LOCK, M8 x 1.25, Cl 8,
12	84437628	1	ROD, , FOR CX720, CX740, CX760, CX780 ONLY
12	84437724	1	ROD, , FOR CX820, CX840, CX860, CX880 ONLY
13	84437637	1	PIN,
14	84437638	1	SUPPORT, , FOR CX720, CX740, CX760, CX780 ONLY
14	84437723	1	SUPPORT, , FOR CX820, CX840, CX860, CX880 ONLY
15	84437639	2	HANDLE GRIP,
16	120044	2	BOLT, CARRIAGE, Short NK, M12 x 30, Cl8.8, Full Thd,
17	84437640	AR	KNIFE,
18	100038	8	NUT, M12 x 1.75, Cl 8,
19	332038	2	NIPPLE, LUBE,
20	84437679	2	BEARING ASSY,
21	328754	8	BOLT, CARRIAGE, Short NK, M12 x 40, Cl8.8, Full Thd,
22	84437940	2	SUPPORT,
23	84437682	1	COVER,
24	86588450	4	WASHER, M6,
25	322357	4	WASHER, SPRING, Belleville, M6,
26	120100	4	BOLT, Hex, M6 x 20, 8.8,
27	87031976	16	BLADE, KNIFE,
28	87031978	16	BLADE, KNIFE,
29	87543540	4	KNIFE, , HARD METAL

19.08(01) CHOPPER, ROTOR FRAME

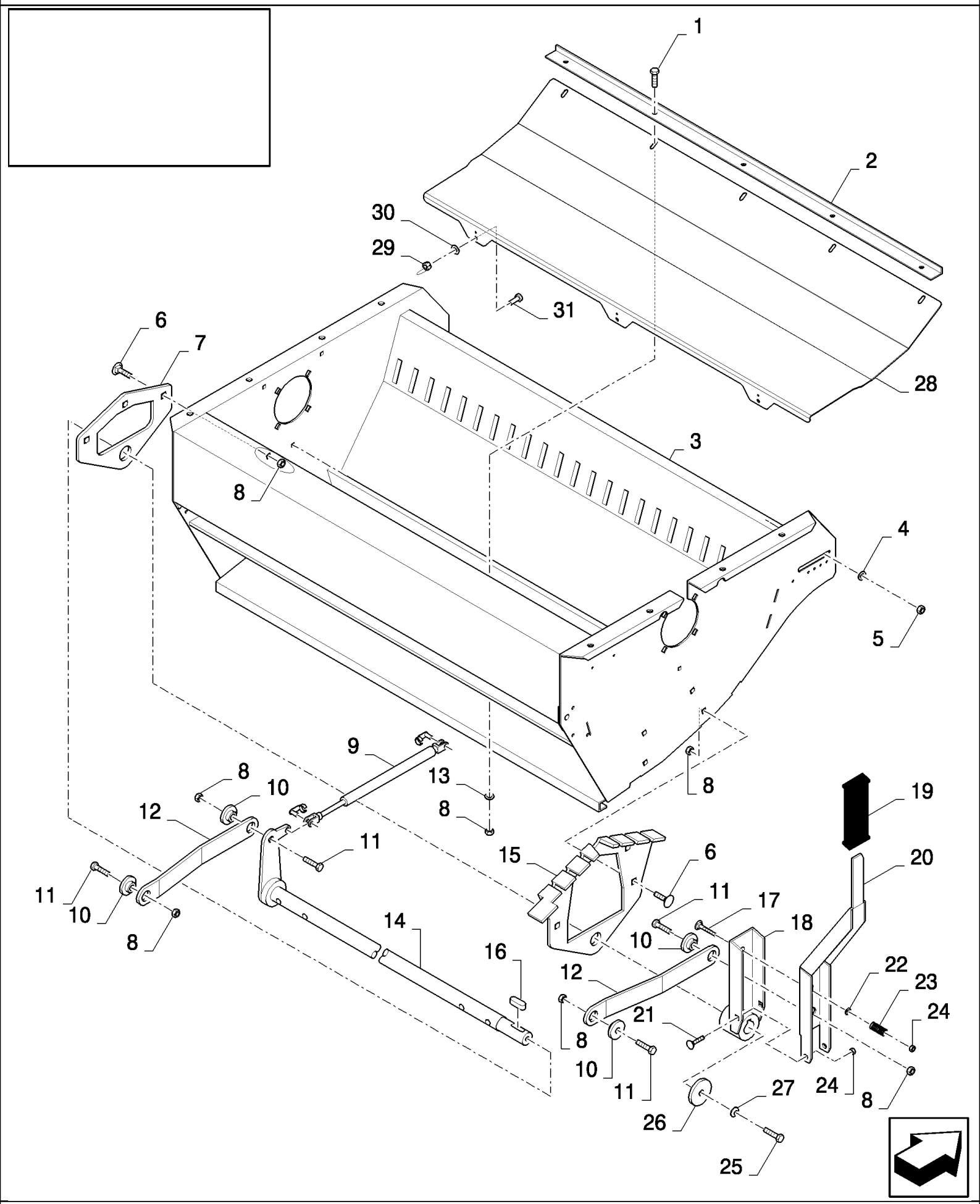

CX880 COMBINE - BASE UNIT (2/01-)

19.08(01) CHOPPER, ROTOR FRAME

ссылка	Номер детали	Кол-во	Описание
1	43138	5	SCREW, Hex, M10 x 20, 8.8, Full Thd,
2	84437641	1	ANGLE, , FOR CX720, CX740, CX760, CX780 ONLY
2	84437725	1	ANGLE, , FOR CX820, CX840, CX860, CX880 ONLY
3	84437659	1	FRAME, , FOR CX720, CX740, CX760, CX780 ONLY
3	84437728	1	FRAME, , FOR CX820, CX840, CX860, CX880 ONLY
4	543043	2	WASHER,
5	412126	2	NUT, LOCK, M12 x 1.75, Cl 8,
6	V43471	7	BOLT, M10x20
7	84437660	1	PLATE,
8	100037	16	NUT, M10 x 1.5, Cl 8,
9	84437698	1	SHOCK ABSORBER, , FOR CX720, CX740, CX760, CX780 ONLY
9	84437726	1	SHOCK ABSORBER, , FOR CX820, CX840, CX860, CX880 ONLY
10	84437287	4	BUSHING,
11	43139	4	SCREW, Hex, M10 x 25, 8.8, Full Thd, M10x25
12	84437700	2	PLATE,
13	378244	5	WASHER, M10,
14	84437702	1	SHAFT, , FOR CX720, CX740, CX760, CX780 ONLY
14	84437729	1	SHAFT, , FOR CX820, CX840, CX860, CX880 ONLY
15	84437703	1	SECTOR, TOOTHED,
16	170030	1	KEY, M8 x 7 x 32, Par,
17	120039	1	BOLT, CARRIAGE, Short NK, M8 x 50, Cl8.8, Full Thd,
18	84437699	1	LEVER,
19	84437639	1	HANDLE GRIP,
20	84437691	1	HANDLE,
21	86507486	2	BOLT, CARRIAGE, Short NK, M8 x 20, Cl8.8, Full Thd,
22	80394628	1	WASHER, LOCK,
23	84437704	1	SPRING,
24	412250	3	NUT, LOCK, M8 x 1.25, Cl 8,
25	43140	1	BOLT, Hex, M10 x 30, 8.8, Full Thd,
26	84437280	1	WASHER,
27	140045	1	WASHER, SPRING, Belleville, M10,
28	87031567	1	FLOOR,
29	89706690	3	NUT, M8, Cl 8,
30	80322358	3	WASHER, 8MM
31	120104	3	SCREW, Hex, M8 x 20, 8.8,

19.09(01) SPREADER HOOD

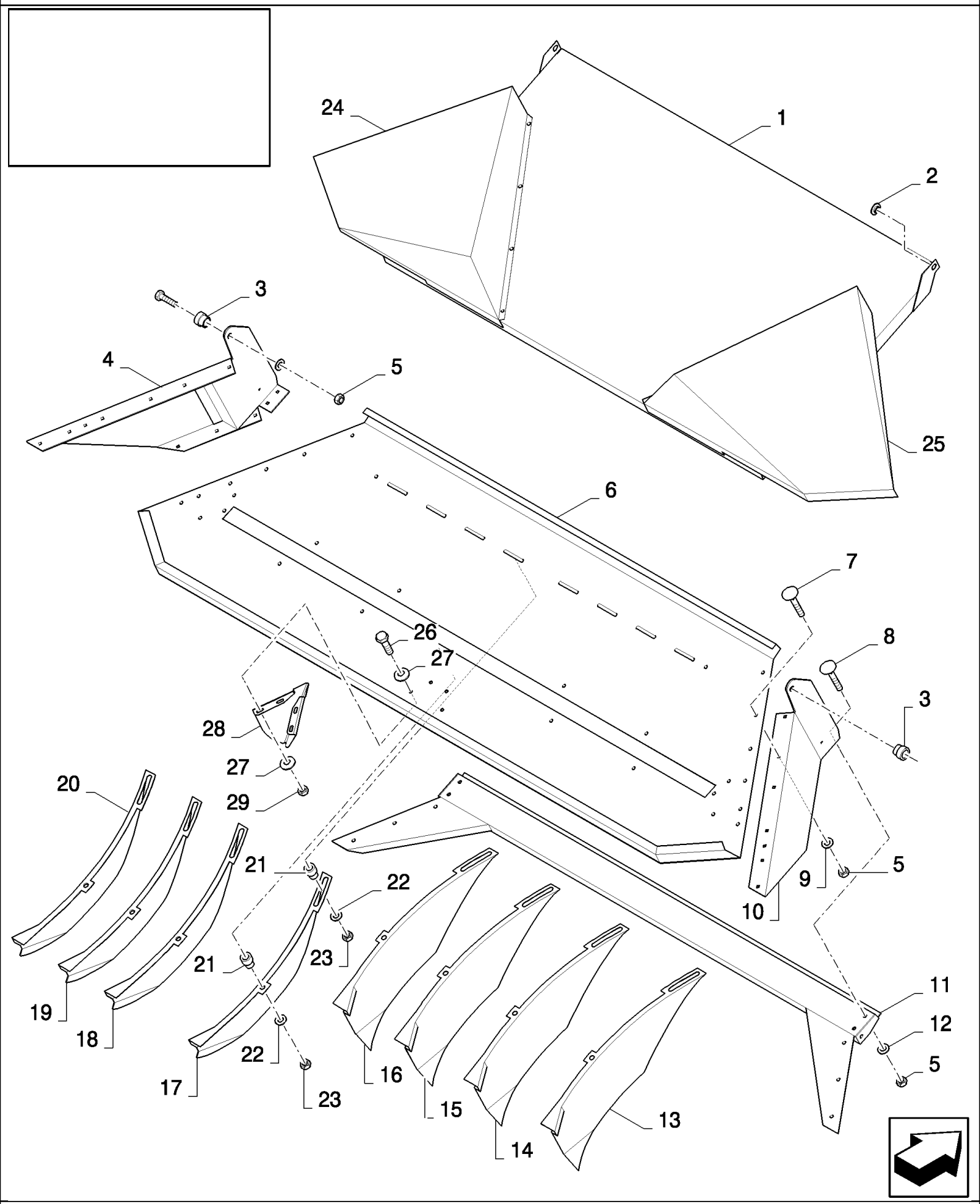

CX880 COMBINE - BASE UNIT (2/01-)

19.09(01) SPREADER HOOD

ссылка	Номер детали	Кол-во	Описание
1	84437709	1	GUIDE, (24,25), FOR CX820, CX840, CX860, CX880 ONLY
1	84437857	1	GUIDE, (24,25), FOR CX720, CX740, CX760, CX780 ONLY
2	84437710	2	BUSHING,
3	84437711	2	BUSHING,
4	84438531	1	SUPPORT,
5	86629542	20	NUT, LOCK, M8 x 1.25, Cl 8,
6	84438517	1	FRAME, , FOR CX820, CX840, CX860, CX880 ONLY
6	84460099	1	PLATE, , FOR NA ONLY, ASN D408
6	84438619	1	FRAME, , FOR CX720, CX740, CX760, CX780 ONLY
7	86507486	12	BOLT, CARRIAGE, Short NK, M8 x 20, Cl8.8, Full Thd,
8	412430	14	BOLT, CARRIAGE, Short NK, M6 x 16, Cl8.8, Full Thd,
9	80394628	26	WASHER, LOCK,
10	84438519	1	SUPPORT,
11	84438520	1	GUIDE, , FOR CX820, CX840, CX860, CX880 ONLY
11	84438620	1	GUIDE, , FOR CX720, CX740, CX760, CX780 ONLY
12	140016	4	WASHER, M8 x 16 x 1.6,
13	84438521	1	DEFLECTOR,
14	84438522	1	DEFLECTOR,
15	84438523	1	DEFLECTOR,
16	84438524	1	DEFLECTOR,
17	84438525	1	DEFLECTOR,
18	84438526	1	DEFLECTOR,
19	84438527	1	DEFLECTOR,
20	84438528	1	DEFLECTOR,
21	84438530	16	BUSHING,
22	140041	16	WASHER, M8 x 28 x 3,
23	412250	16	NUT, LOCK, M8 x 1.25, Cl 8,
24	84441751	1	GUIDE, LH
25	84441752	1	GUIDE, RH
26	120104	4	SCREW, Hex, M8 x 20, 8.8, , ASN D408
27	80322358	8	WASHER, 8MM, ASN D408
28	87031565	1	ANGLE, , ASN D408
29	89706690	4	NUT, M8, Cl 8, , ASN D408

19.10(01) SPREADER HOOD

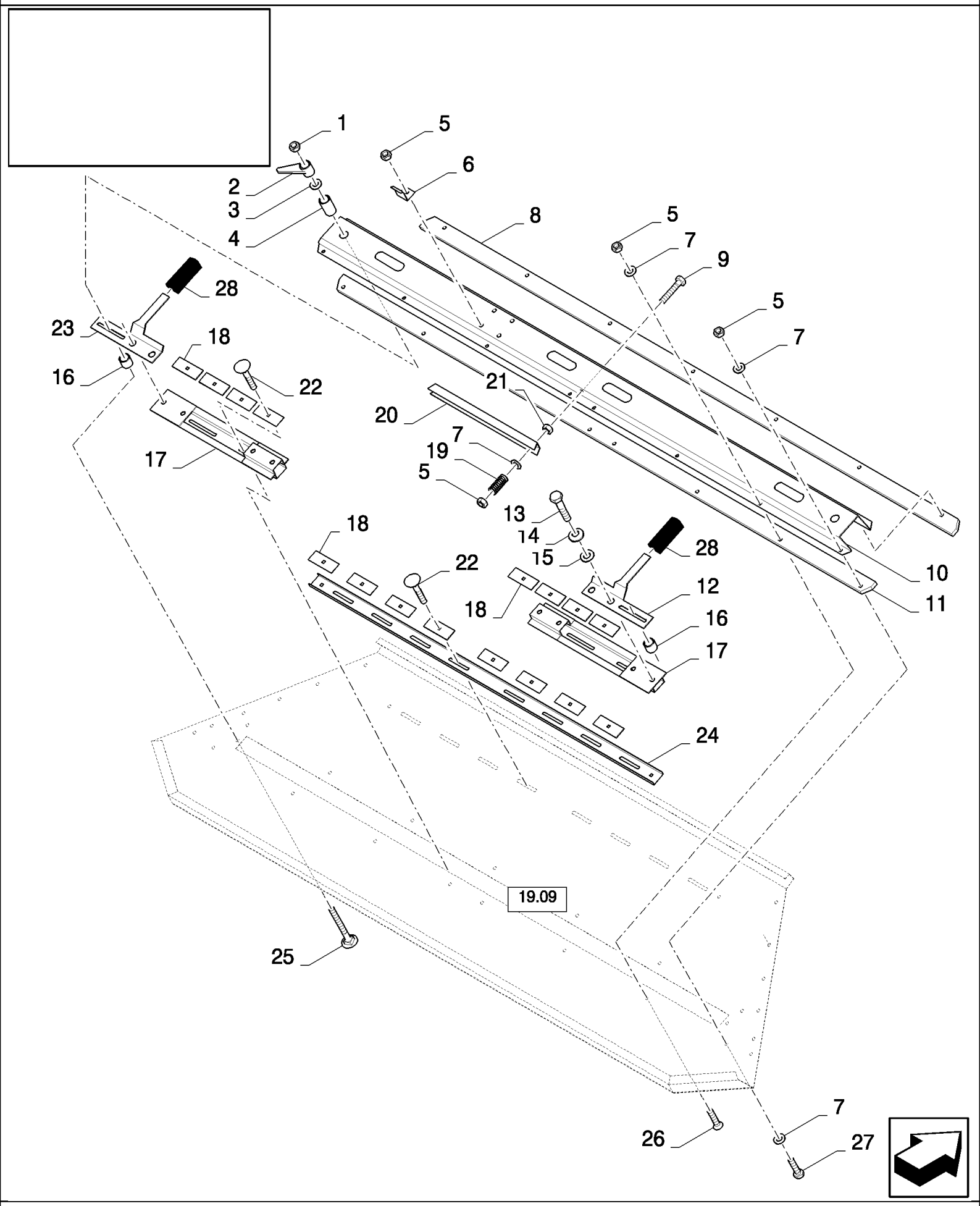

CX880 COMBINE - BASE UNIT (2/01-)

19.10(01) SPREADER HOOD

ссылка	Номер детали	Кол-во	Описание
1	412250	2	NUT, LOCK, M8 x 1.25, Cl 8,
2	84438537	2	KNOB,
3	80394628	2	WASHER, LOCK,
4	84438536	2	BUSHING,
5	86629542	17	NUT, LOCK, M8 x 1.25, Cl 8,
6	84438591	1	CLIP,
7	140016	22	WASHER, M8 x 16 x 1.6,
8	84438506	1	PLATE, ADJUSTING, , FOR CX820, CX840, CX860, CX880 ONLY
8	84438614	1	PLATE, ADJUSTING, , FOR CX720, CX740, CX760, CX780 ONLY
9	43130	1	BOLT, Hex, M8 x 50, 8.8,
10	84438507	1	PROFILE, , FOR CX820, CX840, CX860, CX880 ONLY
10	84438615	1	PROFILE, , FOR CX720, CX740, CX760, CX780 ONLY
11	84438508	1	PLATE, ADJUSTING, , FOR CX820, CX840, CX860, CX880 ONLY
11	84438616	1	PLATE, ADJUSTING, , FOR CX720, CX740, CX760, CX780 ONLY
12	84438510	1	HANDLE,
13	43140	4	BOLT, Hex, M10 x 30, 8.8, Full Thd,
14	140045	4	WASHER, SPRING, Belleville, M10,
15	378244	4	WASHER, M10,
16	84438511	2	BUSHING,
17	84438512	2	GUIDE, , FOR CX820, CX840, CX860, CX880 ONLY
17	84438617	2	GUIDE, , FOR CX720, CX740, CX760, CX780 ONLY
18	84438513	16	PLATE,
19	84438533	1	SPRING, , BSN C225
19	84437704	1	SPRING, , ASN D226
20	84438535	1	SUPPORT,
21	89706690	1	NUT, M8, Cl 8,
22	308761	16	BOLT, CARRIAGE, Short NK, M8 x 25, Cl8.8, Full Thd,
23	84438532	1	HANDLE,
24	84438516	1	PROFILE, , FOR CX820, CX840, CX860, CX880 ONLY
24	84438618	1	PROFILE, , FOR CX720, CX740, CX760, CX780 ONLY
25	9811147	2	BOLT, CARRIAGE, Short NK, M8 x 100, Cl8.8,
26	412168	10	SCREW, Hex Soc Flat Hd, M8 x 30, 8.8, M8x30
27	43128	5	BOLT, Hex, M8 x 30, 8.8,
28	84437639	2	HANDLE GRIP,

19.11(01) SPREADER HOOD, REMOTE CONTROL

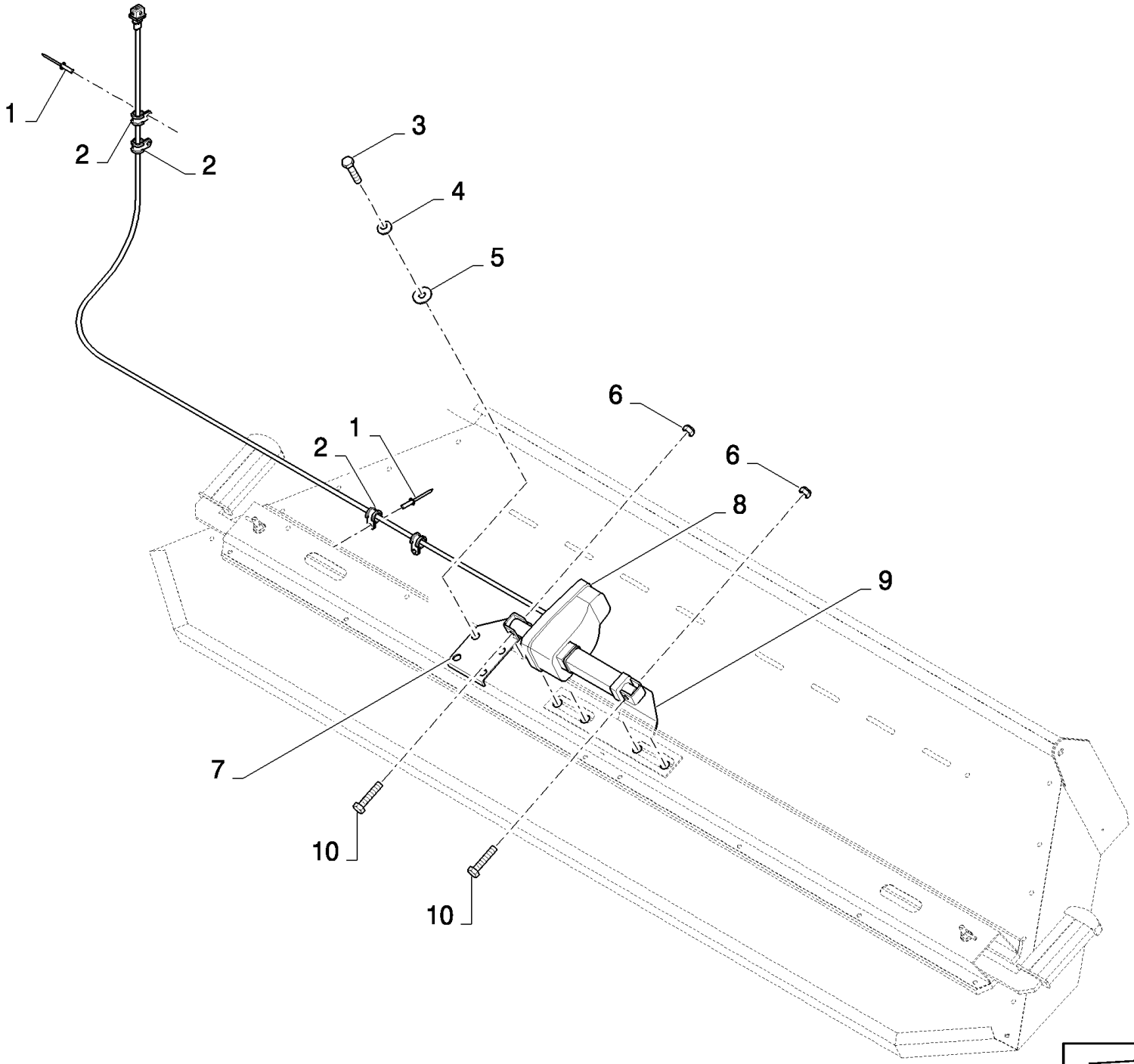

CX880 COMBINE - BASE UNIT (2/01-)

19.11(01) SPREADER HOOD, REMOTE CONTROL

ссылка	Номер детали	Кол-во	Описание
1	9512290	4	RIVET,
2	9507807	4	CLAMP,
3	120104	4	SCREW, Hex, M8 x 20, 8.8,
4	322358	4	WASHER, SPRING, Belleville, M8,
5	140041	4	WASHER, M8 x 28 x 3,
6	100037	2	NUT, M10 x 1.5, Cl 8,
7	84435768	1	SUPPORT,
8	86580838	1	ACTUATOR,
9	84435770	1	SUPPORT,
10	120069	2	SCREW, Hex, M10 x 50, 8.8,

19.50(01) CHAFF SPREADER : MOUNTING GROUP WITH CHOPPER

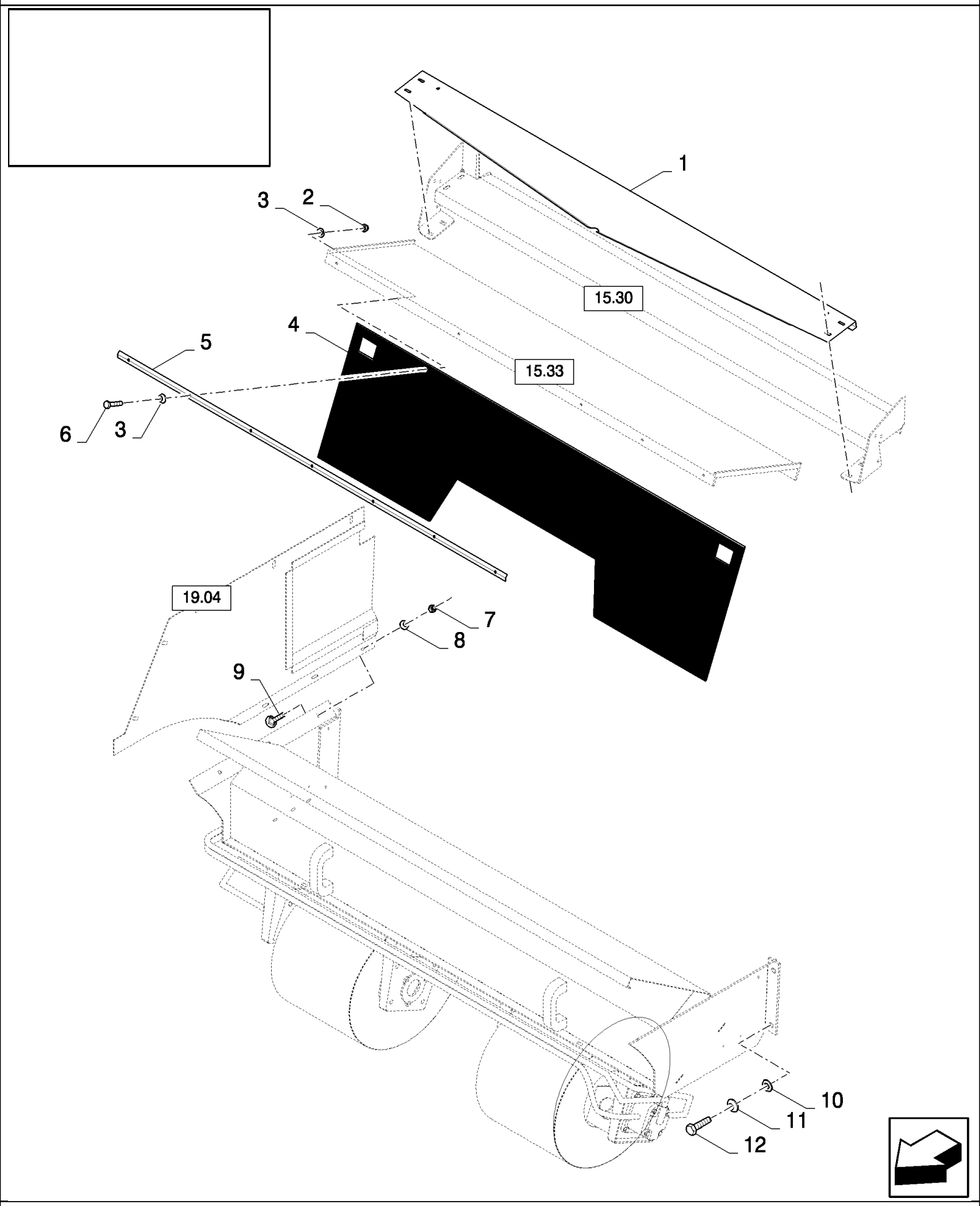

CX880 COMBINE - BASE UNIT (2/01-)

19.50(01) CHAFF SPREADER : MOUNTING GROUP WITH CHOPPER

ссылка	Номер детали	Кол-во	Описание
1	84437852	1	PLATE, , FOR CX720, CX740, CX760, CX780 ONLY
1	84437730	1	PLATE, , FOR CX820, CX840, CX860, CX880 ONLY
2	353308	AR	NUT, M6 x 1, Cl 8,
3	322357	AR	WASHER, SPRING, Belleville, M6,
4	84334262	1	CANVAS, , FOR CX720, CX740, CX760, CX780 ONLY, BSN C335
4	84446196	1	CANVAS, , FOR CX720, CX740, CX760, CX780 ONLY, ASN D336
4	84334257	1	CANVAS, , FOR CX820, CX840, CX860, CX880 ONLY, BSN C335
4	84446195	1	CANVAS, , FOR CX820, CX840, CX860, CX880 ONLY, ASN D336
5	84334211	1	PLATE, FIXING, , FOR CX720, CX740, CX760, CX780 ONLY
5	84334213	1	PLATE, FIXING, , FOR CX820, CX840, CX860, CX880 ONLY
6	120100	AR	BOLT, Hex, M6 x 20, 8.8,
7	89706690	6	NUT, M8, Cl 8,
8	322358	6	WASHER, SPRING, Belleville, M8,
9	86507486	6	BOLT, CARRIAGE, Short NK, M8 x 20, Cl8.8, Full Thd,
10	140018	4	WASHER, M12 x 24 x 2.5, , BSN C237
10	378245	4	WASHER, M12, , ASN D238
11	140046	4	WASHER, Belleville, M12,
12	86629541	4	BOLT, Hex, M12 x 40, 8.8, Full Thd, , BSN C237
12	86629541	4	BOLT, Hex, M12 x 40, 8.8, Full Thd, , ASN D238

19.51(01) CHAFF SPREADER FRAME WITH CHOPPER

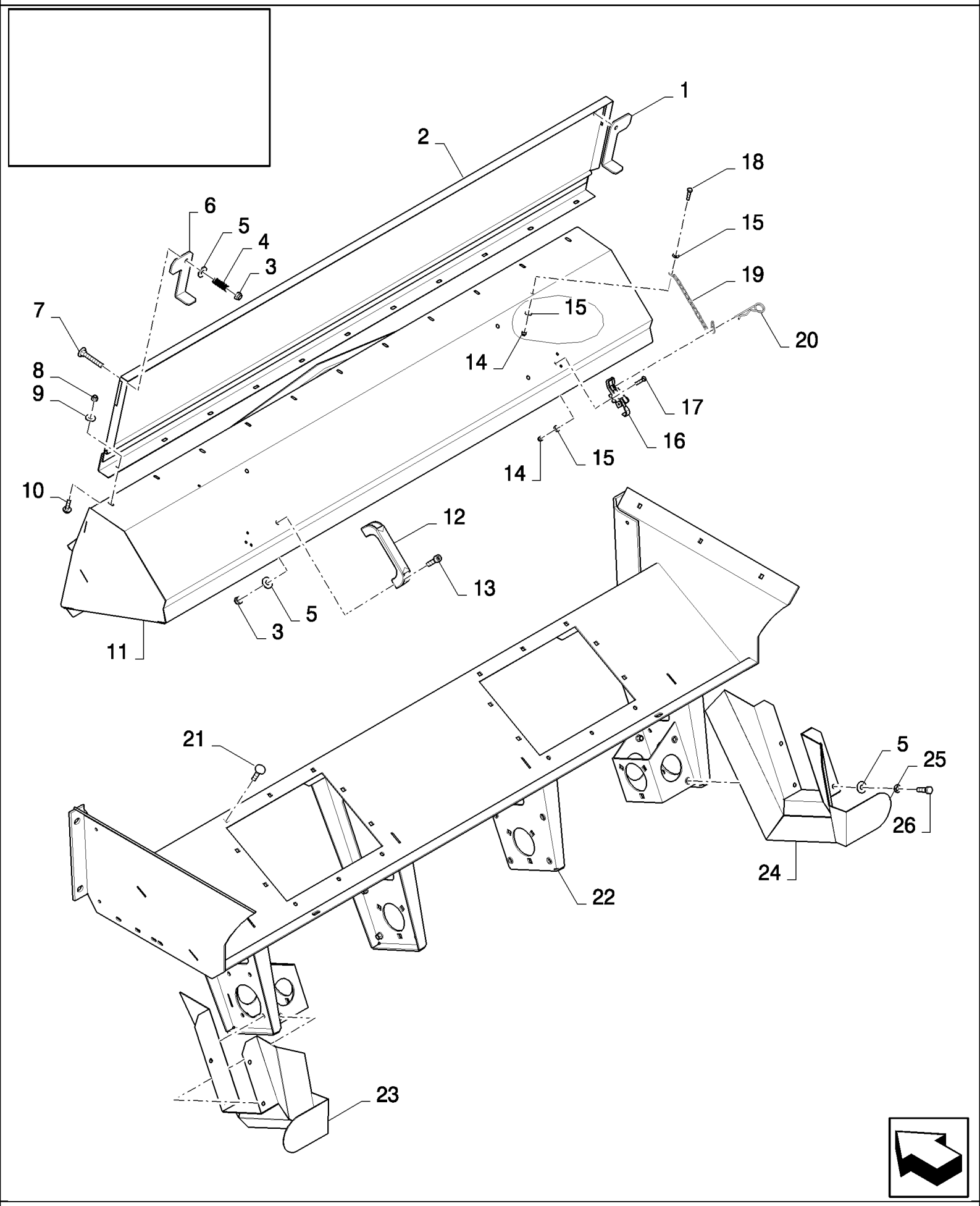

CX880 COMBINE - BASE UNIT (2/01-)

19.51(01) CHAFF SPREADER FRAME WITH CHOPPER

ссылка	Номер детали	Кол-во	Описание
1	84438716	1	LATCH,
2	84438715	1	PLATE, , FOR CX820, CX840, CX860, CX880 ONLY
2	84438939	1	PLATE, , FOR CX720, CX740, CX760, CX780 ONLY
3	412250	6	NUT, LOCK, M8 x 1.25, Cl 8,
4	84437704	2	SPRING,
5	80394628	14	WASHER, LOCK,
6	84438714	1	LATCH,
7	120039	2	BOLT, CARRIAGE, Short NK, M8 x 50, Cl8.8, Full Thd,
8	412152	AR	NUT, LOCK, M6 x 1, Cl 8.8,
9	86588450	AR	WASHER, M6,
10	86512439	AR	SCREW, Short NK, M6 x 16, Cl8.8, Full Thd,
11	84438718	1	GUIDE, , FOR CX820, CX840, CX860, CX880 ONLY
11	84438940	1	GUIDE, , FOR CX720, CX740, CX760, CX780 ONLY
12	84438731	2	HANDLE GRIP,
13	9706749	4	SCREW, Hex Soc Hd, M8 x 25, 12.9, M8x25
14	84438709	6	NUT, M5
15	140014	10	WASHER, M5 x 10 x 1,
16	84438727	2	LOCK,
17	84438712	6	SCREW,
18	120098	2	BOLT, Hex, M5 x 20, 8.8, Full Thd,
19	84438719	2	CHAIN,
20	84438710	2	PIN,
21	86507486	14	BOLT, CARRIAGE, Short NK, M8 x 20, Cl8.8, Full Thd,
22	84438730	1	FRAME, , FOR CX820, CX840, CX860, CX880 ONLY
22	84438941	1	FRAME, , FOR CX720, CX740, CX760, CX780 ONLY
23	84438746	1	GUARD,
24	84438733	1	GUARD,
25	322358	8	WASHER, SPRING, Belleville, M8,
26	43127	8	BOLT, Hex, M8 x 25, 8.8,

19.52(01) CHAFF SPREADER ROTORS WITH CHOPPER

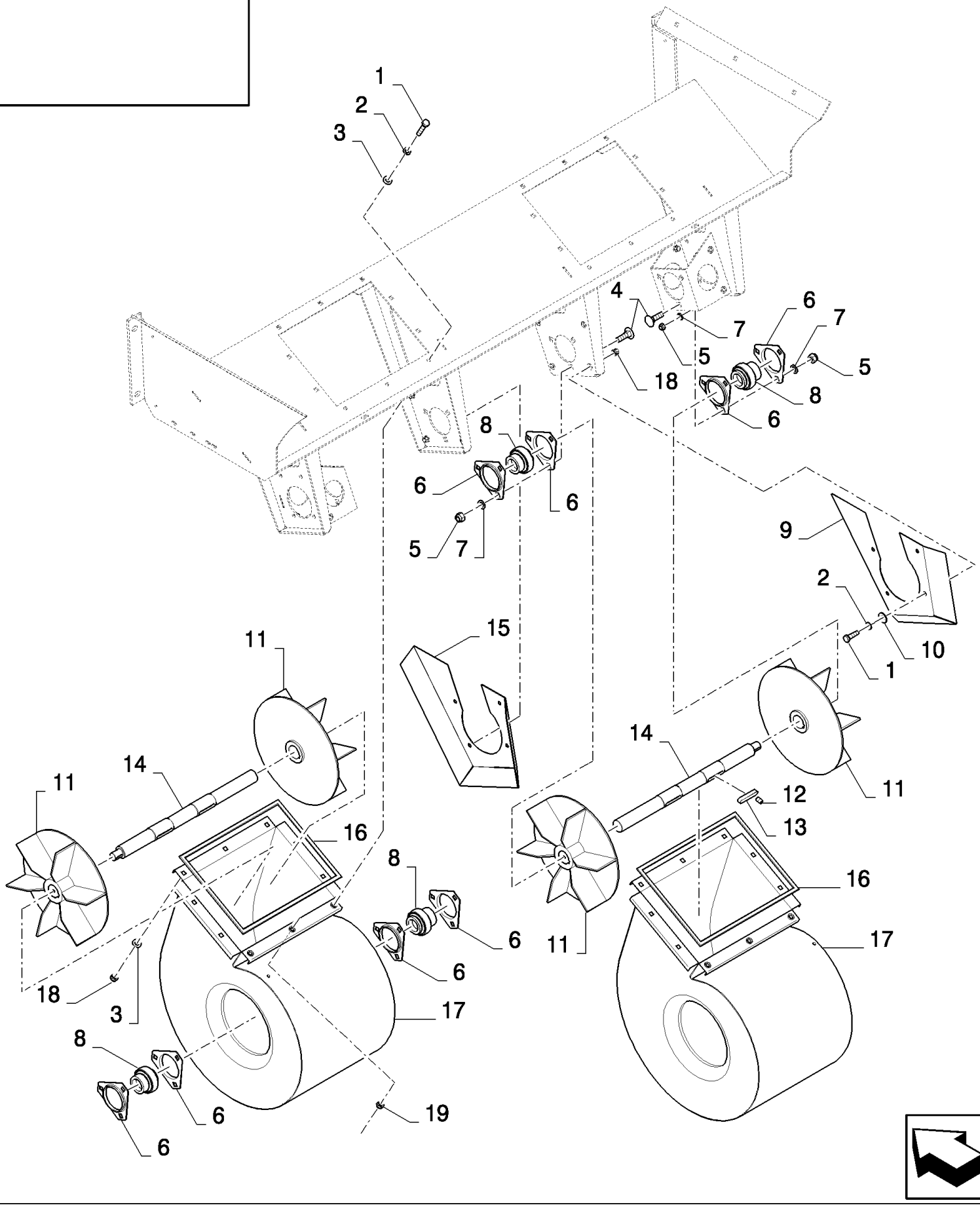

CX880 COMBINE - BASE UNIT (2/01-)

19.52(01) CHAFF SPREADER ROTORS WITH CHOPPER

ссылка	Номер детали	Кол-во	Описание
1	43127	14	BOLT, Hex, M8 x 25, 8.8,
2	322358	14	WASHER, SPRING, Belleville, M8,
3	140016	20	WASHER, M8 x 16 x 1.6,
4	338949	12	BOLT, CARRIAGE, Short NK, M10 x 25, Cl8.8, Full Thd,
5	86514720	12	NUT, LOCK, M10
6	84438734	8	FLANGE,
7	140017	12	WASHER, M10 x 20 x 2,
8	84438735	4	BEARING ASSY,
9	84438738	1	SHIELD,
10	80394628	8	WASHER, LOCK,
11	84438739	4	ROTOR,
12	300476	8	SET SCREW, Hex Soc, M8 x 12 Cup Pt,
13	84438741	4	KEY,
14	84438740	2	SHAFT, , FOR CX820, CX840, CX860, CX880 ONLY
14	84438945	2	SHAFT, , FOR CX720, CX740, CX760, CX780 ONLY
15	84438745	1	SHIELD,
16	84438757	2	SEAL, RUBBER, , BSN C237
16	84440154	2	SEAL, RUBBER, , ASN D238
17	84438749	2	HOUSING, , FOR CX820, CX840, CX860, CX880 ONLY
17	84438946	2	HOUSING, , FOR CX720, CX740, CX760, CX780 ONLY
18	412250	14	NUT, LOCK, M8 x 1.25, Cl 8,
19	84800512	AR	NUT,

19.53(01) CHAFF SPREADER : MOUNTING GROUP WITHOUT CHOPPER

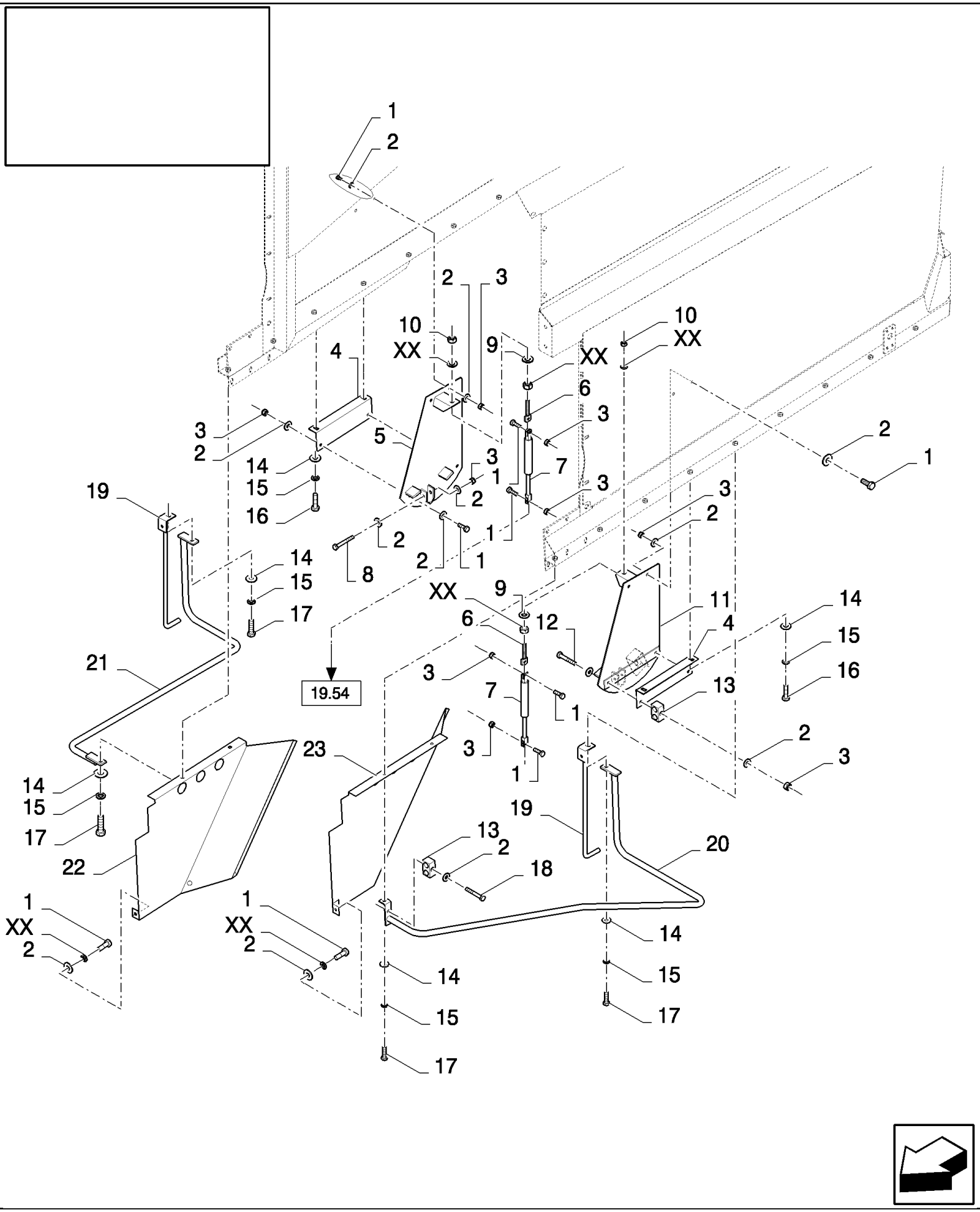

CX880 COMBINE - BASE UNIT (2/01-)

19.53(01) CHAFF SPREADER : MOUNTING GROUP WITHOUT CHOPPER

ссылка	Номер детали	Кол-во	Описание
1	43127	AR	BOLT, Hex, M8 x 25, 8.8,
2	140016	AR	WASHER, M8 x 16 x 1.6,
3	86629542	AR	NUT, LOCK, M8 x 1.25, Cl 8,
4	84444300	2	BRACKET,
5	84444303	1	SUPPORT,
6	84444302	2	TIE-ROD, THREADED,
7	84444265	2	SHOCK ABSORBER,
8	120061	2	BOLT, Hex, M8 x 60, 8.8,
9	140018	4	WASHER, M12 x 24 x 2.5,
10	9706685	4	NUT, M12, Cl 8,
11	84444301	1	SUPPORT,
12	300510	1	BOLT, Hex, M8 x 65, 8.8,
13	84444310	2	CLAMP,
14	140017	10	WASHER, M10 x 20 x 2,
15	140045	10	WASHER, SPRING, Belleville, M10,
16	43139	4	SCREW, Hex, M10 x 25, 8.8, Full Thd, M10x25
17	43140	6	BOLT, Hex, M10 x 30, 8.8, Full Thd,
19	84444311	2	SUPPORT,
20	84444306	1	SUPPORT,
21	84444312	1	SUPPORT,
22	84444305	1	PLATE,
23	84444304	1	PLATE,
18	16044321	2	BOLT, Hex, M8 x 55, 8.8,

19.54(01) CHAFF SPREADER ROTORS WITHOUT CHOPPER

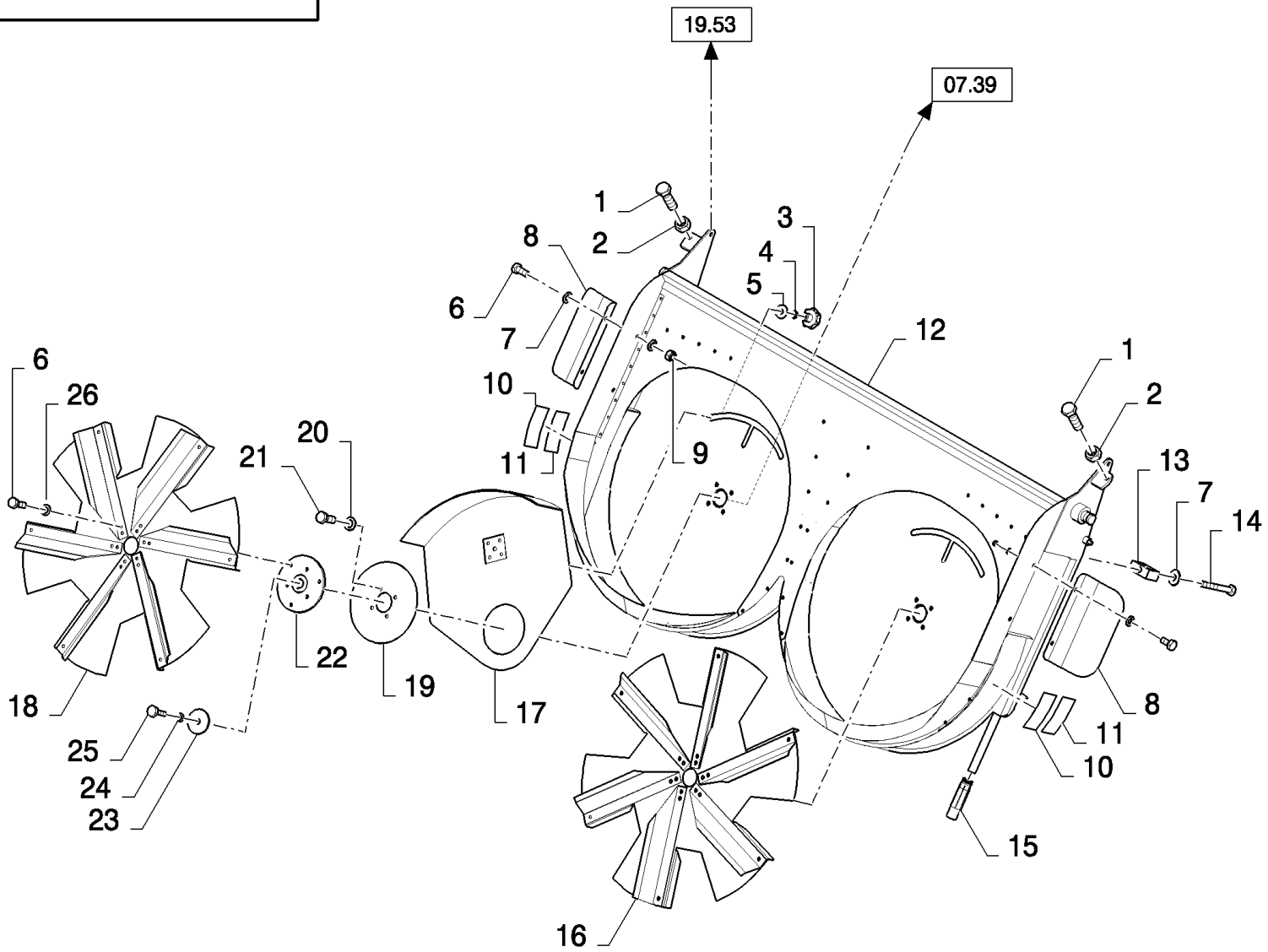

CX880 COMBINE - BASE UNIT (2/01-)

19.54(01) CHAFF SPREADER ROTORS WITHOUT CHOPPER

ссылка	Номер детали	Кол-во	Описание
1	86629541	2	BOLT, Hex, M12 x 40, 8.8, Full Thd,
2	9706685	2	NUT, M12, Cl 8,
3	84444261	2	KNOB,
4	140046	2	WASHER, Belleville, M12,
5	9511052	2	WASHER, M12 x 44 x 4, 12MM
6	16043224	16	BOLT, Hex, M8 x 16, 8.8, Full Thd,
7	140016	9	WASHER, M8 x 16 x 1.6,
8	84444284	2	DEFLECTOR,
9	86629542	4	NUT, LOCK, M8 x 1.25, Cl 8,
10	84004739	2	DECAL,
11	84432910	2	DECAL,
12	84444291	1	FRAME, , FOR CX820, CX840, CX860, CX880 ONLY
12	84444289	1	FRAME, , FOR CX720, CX740, CX760, CX780 ONLY
13	84444310	1	CLAMP,
15	84444298	1	KNOB,
16	84444286	1	DISC, , FOR CX820, CX840, CX860, CX880 ONLY
16	84444285	1	DISC, , FOR CX720, CX740, CX760, CX780 ONLY
17	84444293	2	GUIDE, , FOR CX820, CX840, CX860, CX880 ONLY
17	84444292	2	GUIDE, , FOR CX720, CX740, CX760, CX780 ONLY
18	84444288	1	DISC, , FOR CX820, CX840, CX860, CX880 ONLY
18	84444287	1	DISC, , FOR CX720, CX740, CX760, CX780 ONLY
19	84444297	2	PLATE, LOCKING,
20	140045	8	WASHER, SPRING, Belleville, M10,
21	84444353	8	SCREW,
22	84444294	2	HUB,
23	554195	2	WASHER,
24	322357	2	WASHER, SPRING, Belleville, M6,
25	84444352	2	SCREW,
26	322358	12	WASHER, SPRING, Belleville, M8,
14	16044321	1	BOLT, Hex, M8 x 55, 8.8,

HEADERS	**BEC CUEILLEUR**	**BARRA**	**SKÆREBORDE**
BARRA	**SCHNEIDWERK**	**CABEÇALHO DE CEIFA**	**MAAIBORDEN**

SEC. 20

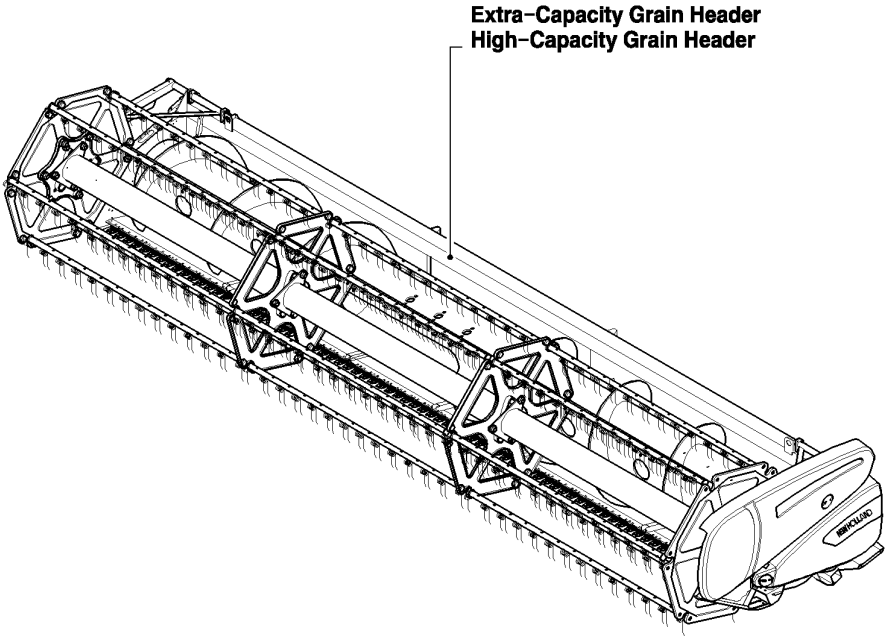

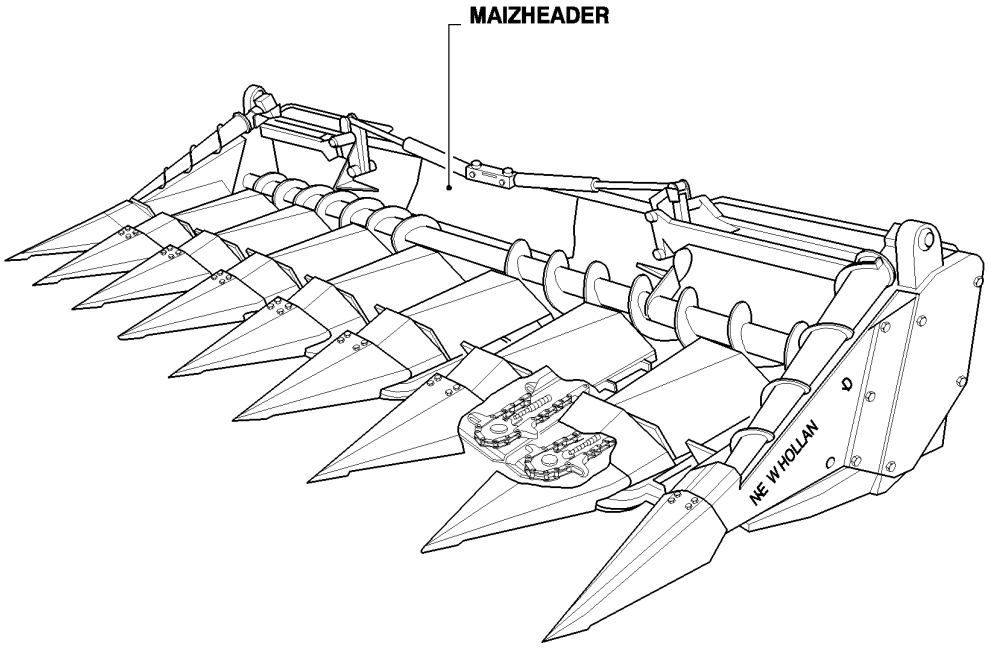

ссылка	Номер детали	Кол-во	Описание