01 -01 PICTORIAL INDEX - MANUAL SHIFT TRANSMISSION AND PTO CLUTCH LUBE

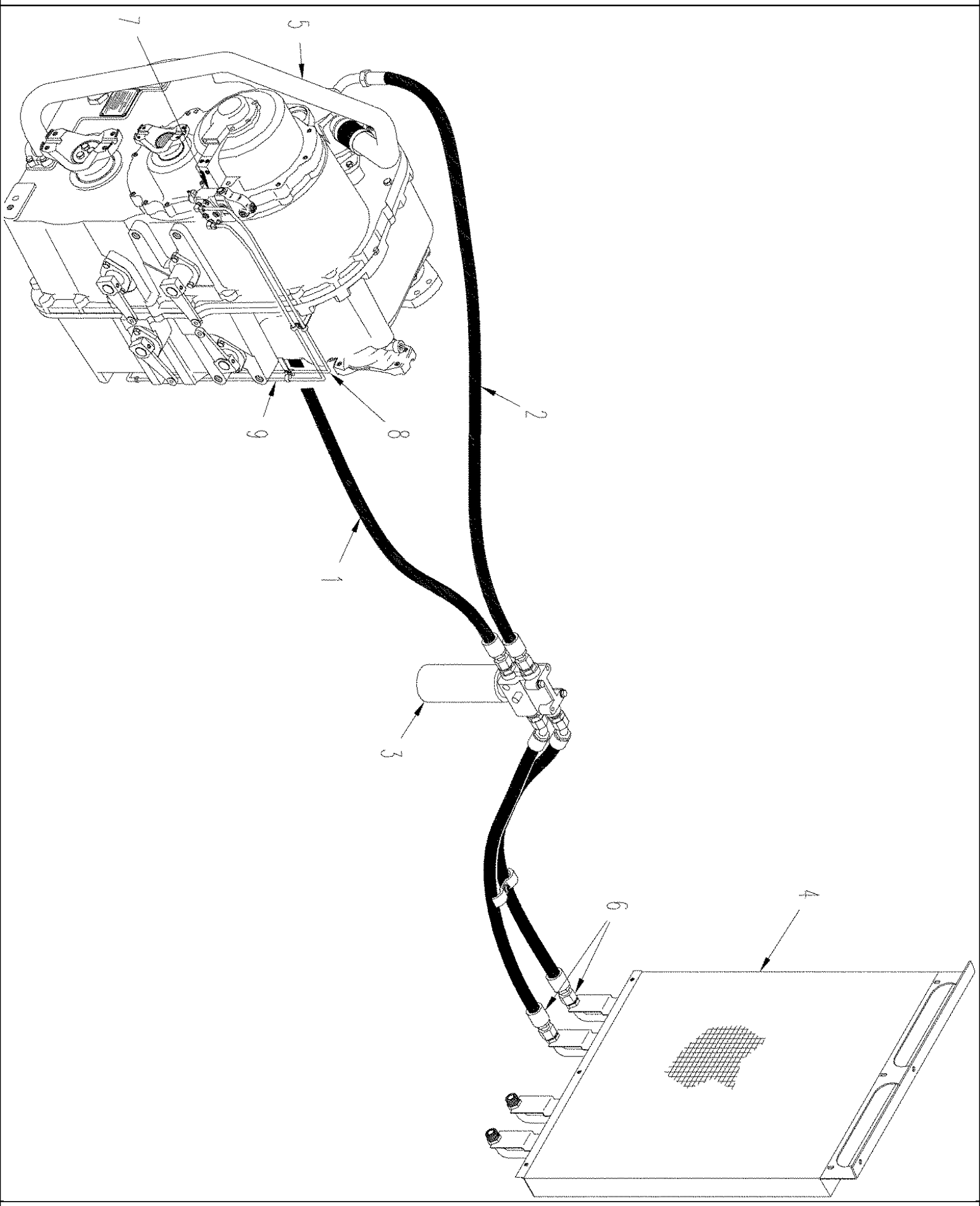

01 -01 PICTORIAL INDEX - MANUAL SHIFT TRANSMISSION AND PTO CLUTCH LUBE

ссылка	Номер детали	Кол-во	Описание
1			Hose, Transmission Regulator Valve Supply, See Figure(s) : 06-14(1)
2			Hose, Pump to Filter, See Figure(s) : 06-14
3			Filter, Left-Hand, See Figure(s) : 08-03
4			Cooler, Hydraulic Oil, See Figure(s) : 08-02
5			Tube, Pump Supply, See Figure(s) : 06-14 (1)
6			Hose, Cooler Supply and Outlet, See Figure(s) : 08-01
7			Power Takeoff Valve Assy, See Figure(s) : 06-23
8			Hose, Power Takeoff Valve Supply, See Figure(s) : 06-15 (1)
9			Hose, Power Takeoff Vavle Supply, See Figure(s) : 06-15 (1)

01 -02 PICTORIAL INDEX - POWER SHIFT TRANSMISSION AND PTO CLUTCH LUBE

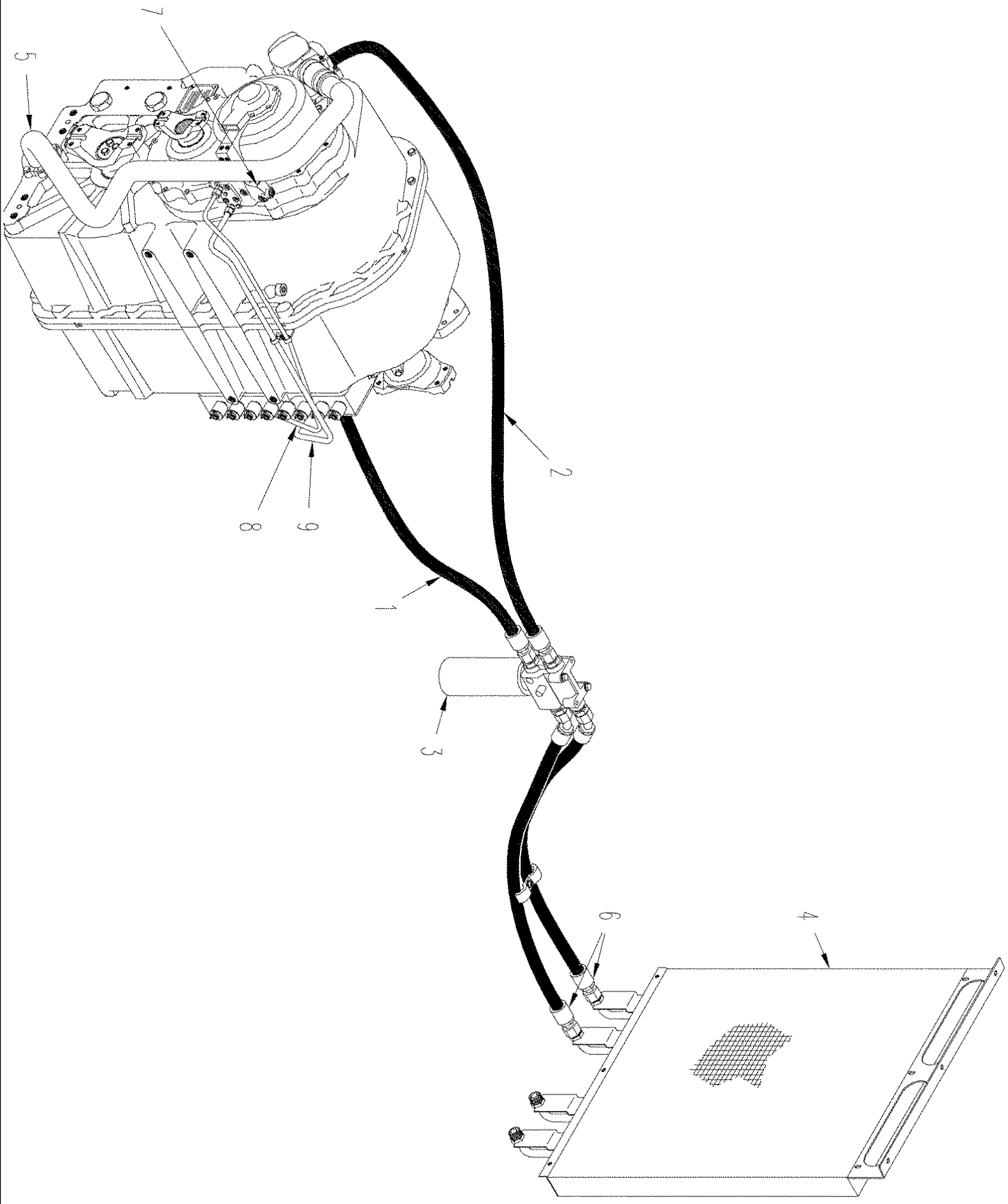

01 -02 PICTORIAL INDEX - POWER SHIFT TRANSMISSION AND PTO CLUTCH LUBE

ссылка	Номер детали	Кол-во	Описание
1			Hose, Transmission Regulator Valve Supply, See Figure(s) : 06-14 (2)
2			Hose, Pump to Filter, See Figure(s) : 06-14 (2)
3			Filter, Left-Hand, See Figure(s) : 08-03
4			Cooler, Hydraulic Oil, See Figure(s) : 08-02
5			Tube, Pump Supply, See Figure(s) : 06-14 (2)
6			Hose, Cooler Supply and Outlet, See Figure(s) : 08-01
7			Power Takeoff Valve Assy, See Figure(s) : 06-23
8			Tube, Power Takeoff Valve Supply, See Figure(s) : 06-15 (2)
9			Hose, Power Takeoff Vavle Supply, See Figure(s) : 06-15 (2)

01 -03 PICTORIAL INDEX - STEERING CIRCUIT

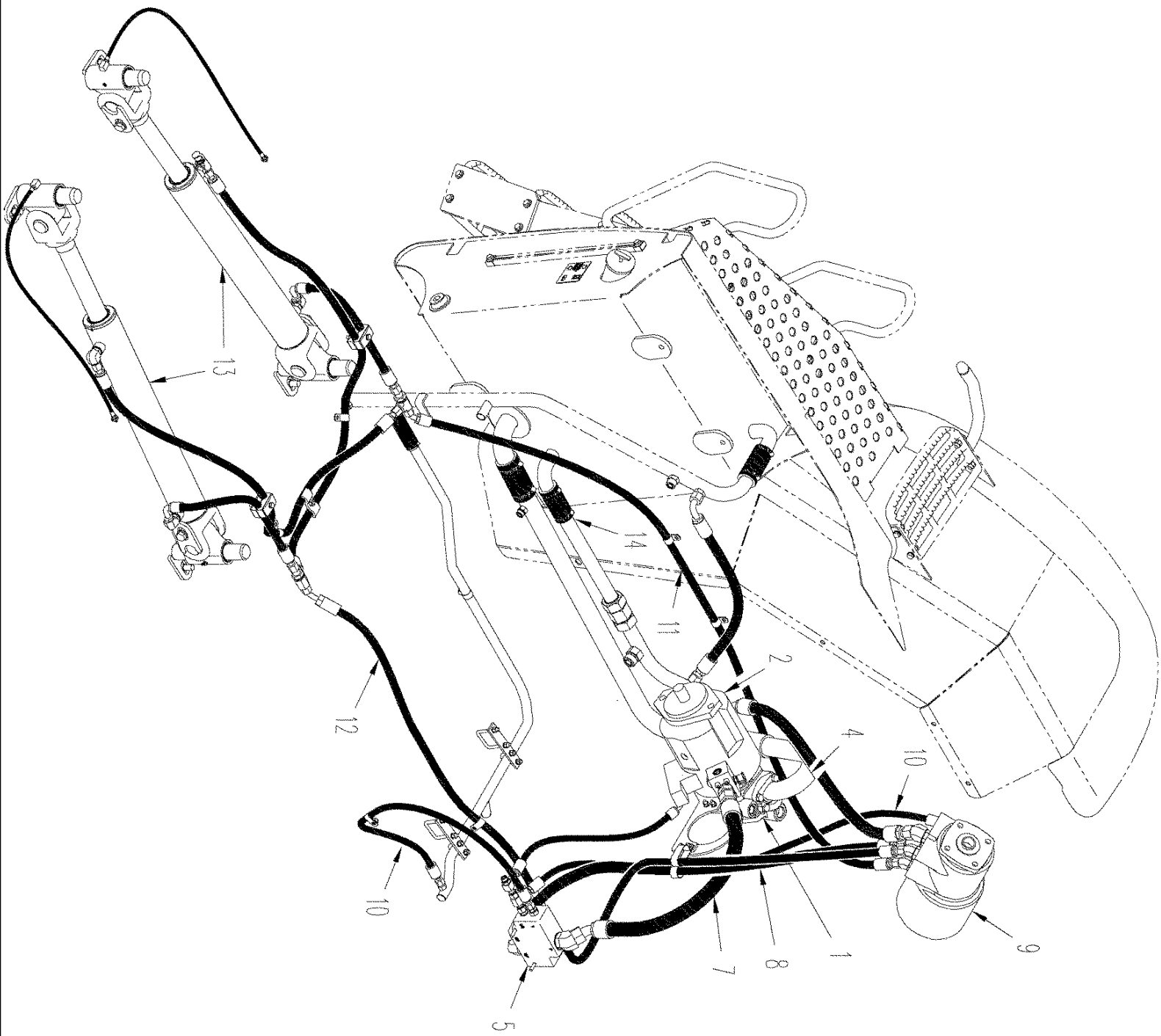

01 -03 PICTORIAL INDEX - STEERING CIRCUIT

ссылка	Номер детали	Кол-во	Описание
1			Gear Pump, See Figure(s) : 08-35
2			Piston Pump, Standard Hydraulics, See Figure(s) : 08-30
3			Piston Pump, High Output Hydraulics, Not Illustrated, See Figure(s) : 08-34
4			Tube, Gear Pump Supply, See Figure(s) : 08-28 (1), 08-28 (2), 08-32
5			Priority Valve, Standard Hydraulics, See Figures(s) : 08-31
6			Priority Valve, High Output Hydraulics, Not Illustrated, See Figure(s) : 08-36
7			Hose, Priority Valve Supply, See Figure(s) : 08-28 (1), 08-28 (2), 08-32
8			Hose, Steering Control Supply from Priority Valve, See Figure(s) : 05-01
9			Steering Control Valve, See Figure(s) : 05-03
10			Hose, Steering Load Sense, See Figure(s) : 08-13, 08-08
11			Hose, Steering Control to Left-Hand Articulation Cylinder, See Figure(s) : 05-01
12			Hose, Steering Control to Right-Hand Articulation Cylinder, See Figure(s) : 05-01
13			Cylinder, Articulation, See Figure(s) : 05-02
14			Tube, Piston Pump Supply, See Figure(s) : 08-28 (1), 08-28(2), 08-32

01 -04 PICTORIAL INDEX - AXLE LUBRICATION CIRCUIT, (TJ375, TJ425 MANUAL SHIFT)

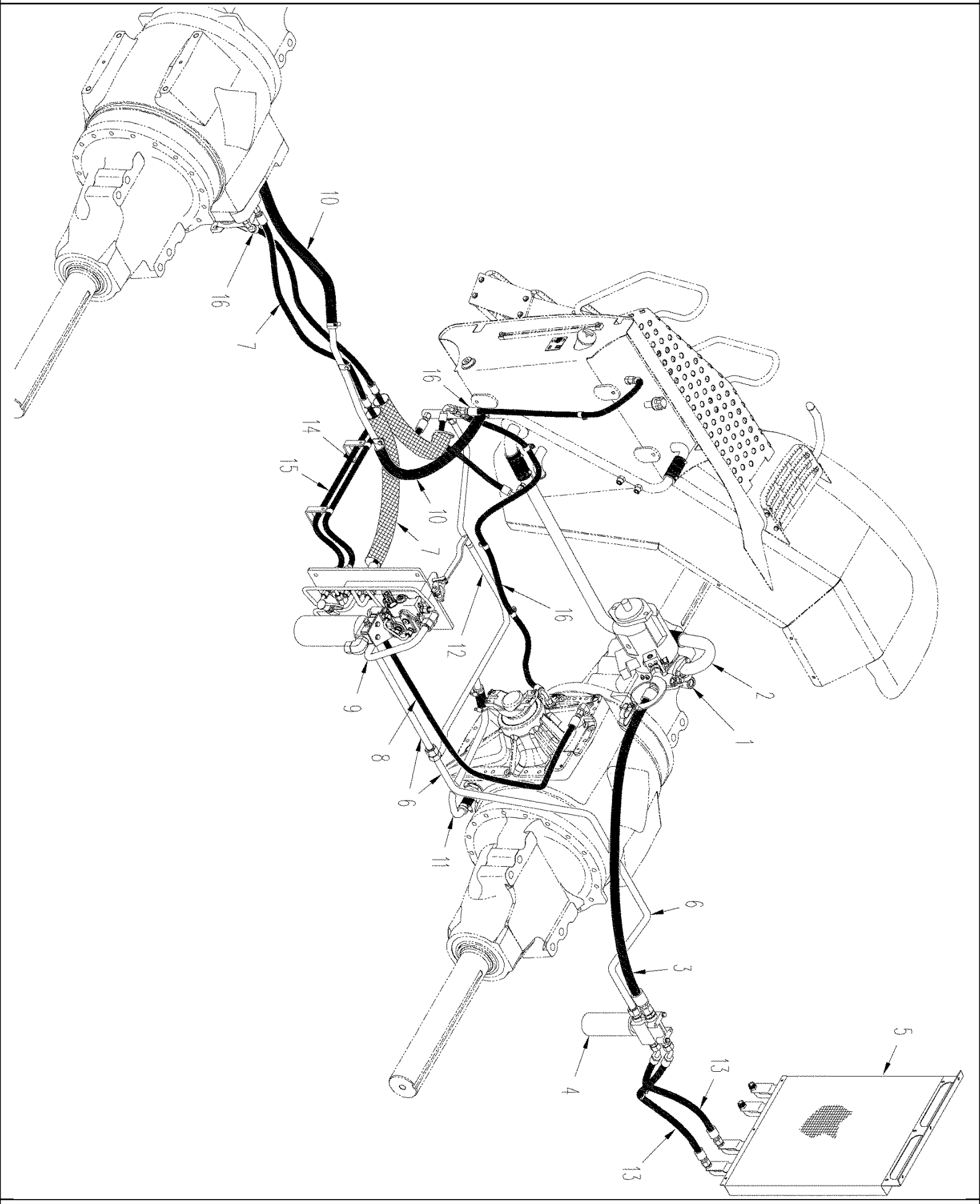

01 -04 PICTORIAL INDEX - AXLE LUBRICATION CIRCUIT, (TJ375, TJ425 MANUAL SHIFT)

ссылка	Номер детали	Кол-во	Описание
1			Gear Pump, See Figure(s) : 08-35
2			Tube, Gear Pump Supply, See Figure(s) : 08-28 (1), 08-28 (2), 08-32
3			Hose, Gear Pump to Filter, See Figure(s) : 08-28 (1), 08-28 (2), 08-32
4			Filter, Right-Hand, See Figure(s) : 08-03
5			Cooler, Hydraulic Oil, See Figure(s) : 08-02
6			Tube, Filter to Regulator Valve, See Figure(s) : 08-09
7			Hose, Regulator Valve Supply to Rear Axle, See Figure(s) : 08-08
8			Hose, Regulator Valve Supply to Front Axle, See Figure(s) : 08-08
9			Regulator Valve, See Figure(s) : 08-22
10			Hose, Rear Axle Return to Tank, See Figure(s) : 08-08
11			Hose, Front Axle Return to Tank, See Figure(s) : 08-08
12			Tube, Return, See Figure(s) : 08-08
13			Hose, Filter to Cooler, See Figure(s) : 08-01
14			Hose, Tow Valve Supply, See Figure(s) : 07-04 (1), 07-05 (1)
15			Hose, Regulator Valve Return to Tank, See Figure(s) : 08-08
16			Hose, Vent, See Figure(s) : 08-09

01 -04(01) PICTORIAL INDEX - AXLE LUBRICATION CIRCUIT, (TJ375, TJ425 MANUAL SHIFT)

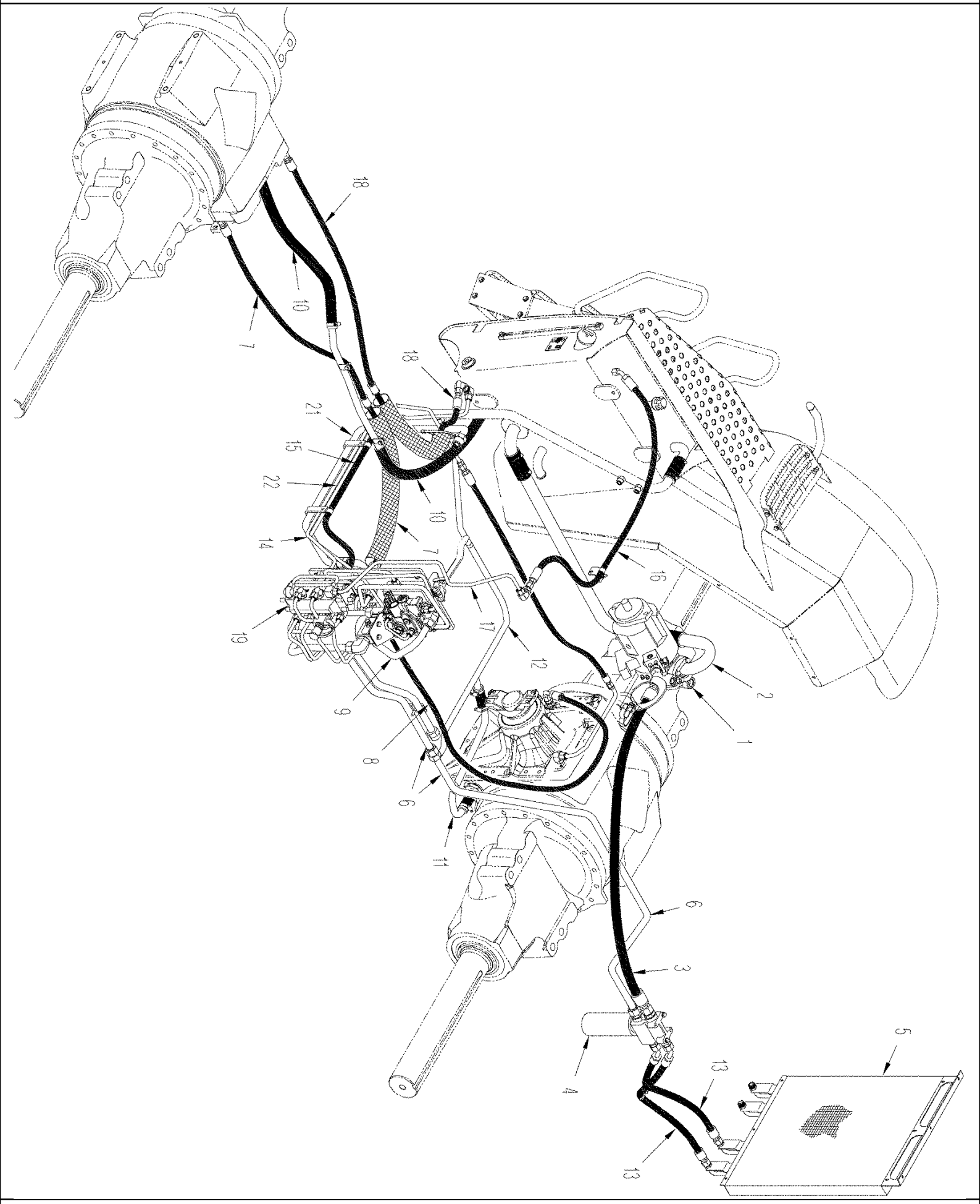

01 -04(01) PICTORIAL INDEX - AXLE LUBRICATION CIRCUIT, (TJ375, TJ425 MANUAL SHIFT)

ссылка	Номер детали	Кол-во	Описание
1			Gear Pump, See Figure(s) : 08-35
2			Tube, Gear Pump Supply, See Figure(s) : 08-28 (1), 08-28 (2), 08-32
3			Hose, Gear Pump to Filter, See Figure(s) : 08-28 (1), 08-28 (2), 08-32
4			Filter, Right-Hand, See Figure(s) : 08-03
5			Cooler, Hydraulic Oil, See Figure(s) : 08-02
6			Tube, Filter to Regulator Valve, See Figure(s) : 08-09
7			Hose, Regulator Valve Supply to Rear Axle, See Figure(s) : 08-08 (01)
8			Hose, Regulator Valve Supply to Front Axle, See Figure(s) : 08-08 (01)
9			Regulator Valve, See Figure(s) : 08-22
10			Hose, Rear Axle Return to Tank, See Figure(s) : 08-08 (01)
11			Hose, Front Axle Return to Tank, See Figure(s) : 08-08 (01)
12			Tube, Return, See Figure(s) : 08-08 (01)
13			Hose, Filter to Cooler, See Figure(s) : 08-01
14			Tube, Rear Axle Air Lube / Supply, See Figure(s) : 08-09 (01)
15			Hose, Regulator Valve Return to Tank, See Figure(s) : 08-08 (01)
16			Hose, Air Supply, See Figure(s) : 08-09 (01)
17			Tube, Air Supply, See Figure(s) : 08-09 (01)
18			Hose, Rear Axle Air / Lube Supply, See Figure(s) : 08-09 (01)
19			Pump, Axle Air / Lube, See Figure(s) : 08-09 (01)
20			Hose, Front Axle Air / Lube Supply, See Figure(s) 08-09 (01)
21			Tube, Front Axle Air / Lube Supply, See Figure(s) : 08-09 (01)
22			Tube, Charge Return to Filter, See Figure(s) : 08-09 (01)

01 -04(02) PICTORIAL INDEX - AXLE LUBRICATION CIRCUIT, (TJ375, TJ425 MANUAL SHIFT)

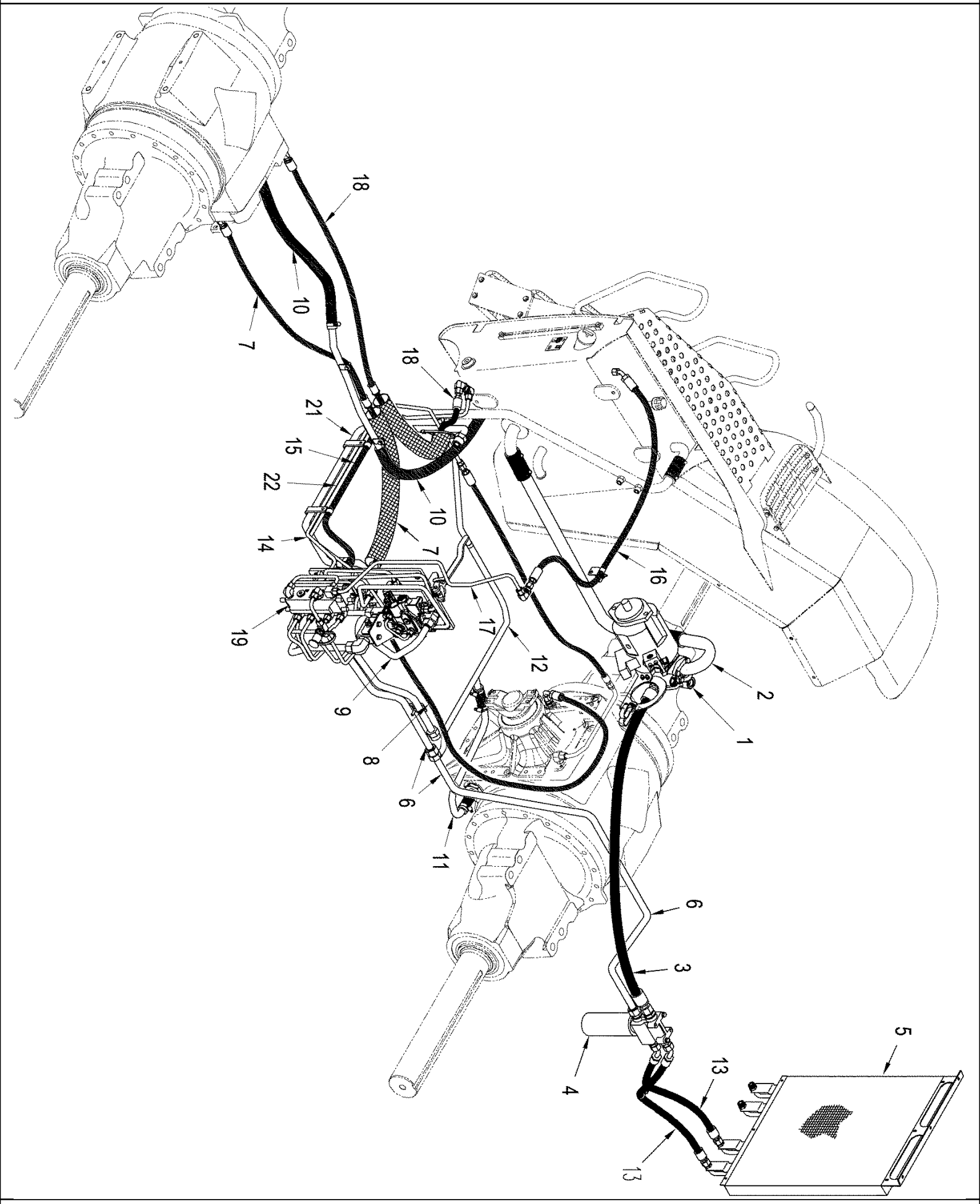

01 -04(02) PICTORIAL INDEX - AXLE LUBRICATION CIRCUIT, (TJ375, TJ425 MANUAL SHIFT)

ссылка	Номер детали	Кол-во	Описание
1			Gear Pump, See Figure(s) : 08-35
2			Tube, Gear Pump Supply, See Figure(s) : 08-28 (1), 08-28 (2), 08-32
3			Hose, Gear Pump to Filter, See Figure(s) : 08-28 (1), 08-28 (2), 08-32
4			Filter, Right-Hand, See Figure(s) : 08-03
5			Cooler, Hydraulic Oil, See Figure(s) : 08-02
6			Tube, Filter to Regulator Valve, See Figure(s) : 08-09
7			Hose, Regulator Valve Supply to Rear Axle, See Figure(s) : 08-08 (02)
8			Hose, Regulator Valve Supply to Front Axle, See Figure(s) : 08-08 (02)
9			Regulator Valve, See Figure(s) : 08-22
10			Hose, Rear Axle Return to Tank, See Figure(s) : 08-08 (02)
11			Hose, Front Axle Return to Tank, See Figure(s) : 08-08 (02)
12			Tube, Return, See Figure(s) : 08-08 (02)
13			Hose, Filter to Cooler, See Figure(s) : 08-01
14			Tube, Rear Axle Air Lube / Supply, See Figure(s) : 08-09 (01)
15			Hose, Regulator Valve Return to Tank, See Figure(s) : 08-08 (02)
16			Hose, Air Supply, See Figure(s) : 08-09 (01)
17			Tube, Air Supply, See Figure(s) : 08-09 (01)
18			Hose, Rear Axle Air / Lube Supply, See Figure(s) : 08-09 (01)
19			Pump, Axle Air / Lube, See Figure(s) : 08-09 (01)
20			Hose, Front Axle Air / Lube Supply, See Figure(s) 08-09 (01)
21			Tube, Front Axle Air / Lube Supply, See Figure(s) : 08-09 (01)
22			Tube, Charge Return to Filter, See Figure(s) : 08-09 (01)

01 -05 PICTORIAL INDEX - AXLE LUBRICATION CIRCUIT, TJ375 HD, TJ425 POWER SHIFT, TJ450

01 -05 PICTORIAL INDEX - AXLE LUBRICATION CIRCUIT, TJ375 HD, TJ425 POWER SHIFT, TJ450

ссылка	Номер детали	Кол-во	Описание
1			Gear Pump, See Figure(s) : 08-35
2			Tube, Gear Pump Supply, See Figure(s) : 08-28 (1), 08-28 (2), 08-32
3			Hose, Gear Pump to Filter, See Figure(s) : 08-28 (1), 08-28 (2), 08-32
4			Filter, Right-Hand, See Figure(s) : 08-03
5			Cooler, Hydraulic Oil, See Figure(s) : 08-02
6			Tube, Filter to Regulator Valve, See Figure(s) : 08-14
7			Hose, Regulator Valve to Rear Axle, See Figure(s) : 08-13
8			Hose, Regulator Valve Supply to Front Axle, See Figure(s) : 08-13
9			Regulator Valve, See Figure(s) : 08-22
10			Hose, Rear Axle Return to Tank, See Figure(s) : 08-13
11			Hose, Front Axle Return to Tank, See Figure(s) : 08-13
12			Tube, Return, See Figure(s) : 08-13
13			Hose, Filter to Cooler, See Figure(s) : 08-01
14			Hose, Tow Valve Supply, See Figure(s) : 07-04 (3), 07-05 (3)
15			Hose, Regulator Valve Return to Tank, See Figure(s) : 08-13
16			Hose, Vent, See Figure(s) : 08-14
17			Jet Pump, See Figure(s) : 06-37
18			Hose, Jet Pump to Differential, See Figure(s) : 08-13

01 -05(01) PICTORIAL INDEX - AXLE LUBRICATION CIRCUIT, TJ375 HD, TJ425 POWER SHIFT, TJ450, TJ500

01 -05(01) PICTORIAL INDEX - AXLE LUBRICATION CIRCUIT, TJ375 HD, TJ425 POWER SHIFT, TJ450, TJ500

ссылка	Номер детали	Кол-во	Описание
1			Gear Pump, See Figure(s) : 08-35
2			Tube, Gear Pump Supply, See Figure(s) : 08-28 (1), 08-28 (2), 08-32
3			Hose, Gear Pump to Filter, See Figure(s) : 08-28 (1), 08-28 (2), 08-32
4			Filter, Right-Hand, See Figure(s) : 08-03
5			Cooler, Hydraulic Oil, See Figure(s) : 08-02
6			Tube, Filter to Regulator Valve, See Figure(s) : 08-15
7			Hose, Regulator Valve to Rear Axle, See Figure(s) : 08-13 (01)
8			Hose, Regulator Valve Supply to Front Axle, See Figure(s) : 08-13 (01)
9			Regulator Valve, See Figure(s) : 08-22
10			Hose, Rear Axle Return to Tank, See Figure(s) : 08-13 (01)
11			Hose, Front Axle Return to Tank, See Figure(s) : 08-13 (01)
12			Tube, Return, See Figure(s) : 08-13
13			Hose, Filter to Cooler, See Figure(s) : 08-01
14			Pump, Axle Air / Lube, See Figure(s) : 08-14 (01)
15			Hose, Regulator Valve Return to Tank, See Figure(s) : 08-13 (01)
16			Hose, Air Supply, See Figure(s) : 08-14 (01)
17			Tube, Air Supply, See Figure(s) : 08-14 (01)
18			Hose, Front Axle Air / Lube Supply, See Figure(s) : 08-14 (01)
19			Tube, Front Axle Air / Lube Supply, See Figure(s) : 08-14 (01)
20			Hose, Rear Axle Air / Lube Supply, See Figure(s) : 08-14 (01)
21			Tube, Rear Axle Air / Lube Supply, See Figure(s) : 08-14 (01)
22			Tube, Charge Return to Filter, See Figure(s) : 08-15

01 -05(02) PICTORIAL INDEX - AXLE LUBRICATION CIRCUIT, TJ375 HD, TJ425 POWER SHIFT, TJ450, TJ500

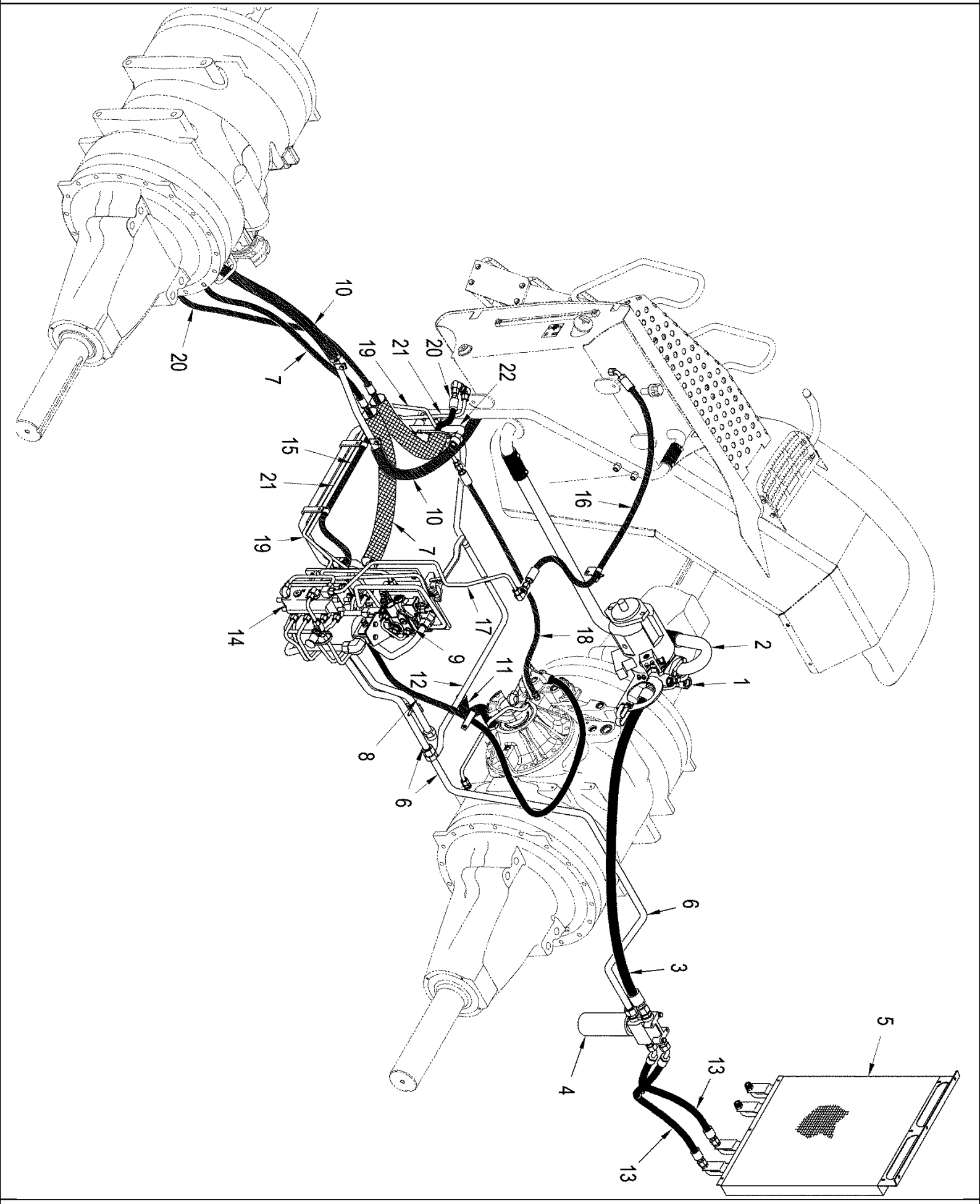

01 -05(02) PICTORIAL INDEX - AXLE LUBRICATION CIRCUIT, TJ375 HD, TJ425 POWER SHIFT, TJ450, TJ500

ссылка	Номер детали	Кол-во	Описание
1			Gear Pump, See Figure(s) : 08-35
2			Tube, Gear Pump Supply, See Figure(s) : 08-28 (1), 08-28 (2), 08-32
3			Hose, Gear Pump to Filter, See Figure(s) : 08-28 (1), 08-28 (2), 08-32
4			Filter, Right-Hand, See Figure(s) : 08-03
5			Cooler, Hydraulic Oil, See Figure(s) : 08-02
6			Tube, Filter to Regulator Valve, See Figure(s) : 08-15
7			Hose, Regulator Valve to Rear Axle, See Figure(s) : 08-13 (02)
8			Hose, Regulator Valve Supply to Front Axle, See Figure(s) : 08-13 (02)
9			Regulator Valve, See Figure(s) : 08-22
10			Hose, Rear Axle Return to Tank, See Figure(s) : 08-13 (02)
11			Hose, Front Axle Return to Tank, See Figure(s) : 08-13 (02)
12			Tube, Return, See Figure(s) : 08-13
13			Hose, Filter to Cooler, See Figure(s) : 08-01
14			Pump, Axle Air / Lube, See Figure(s) : 08-14 (01)
15			Hose, Regulator Valve Return to Tank, See Figure(s) : 08-13 (02)
16			Hose, Air Supply, See Figure(s) : 08-14 (01)
17			Tube, Air Supply, See Figure(s) : 08-14 (01)
18			Hose, Front Axle Air / Lube Supply, See Figure(s) : 08-14 (01)
19			Tube, Front Axle Air / Lube Supply, See Figure(s) : 08-14 (01)
20			Hose, Rear Axle Air / Lube Supply, See Figure(s) : 08-14 (01)
21			Tube, Rear Axle Air / Lube Supply, See Figure(s) : 08-14 (01)
22			Tube, Charge Return to Filter, See Figure(s) : 08-15

01 -06 PICTORIAL INDEX - CHARGE PUMP AND BRAKE CIRCUIT, TJ375, TJ425 MANUAL SHIFT

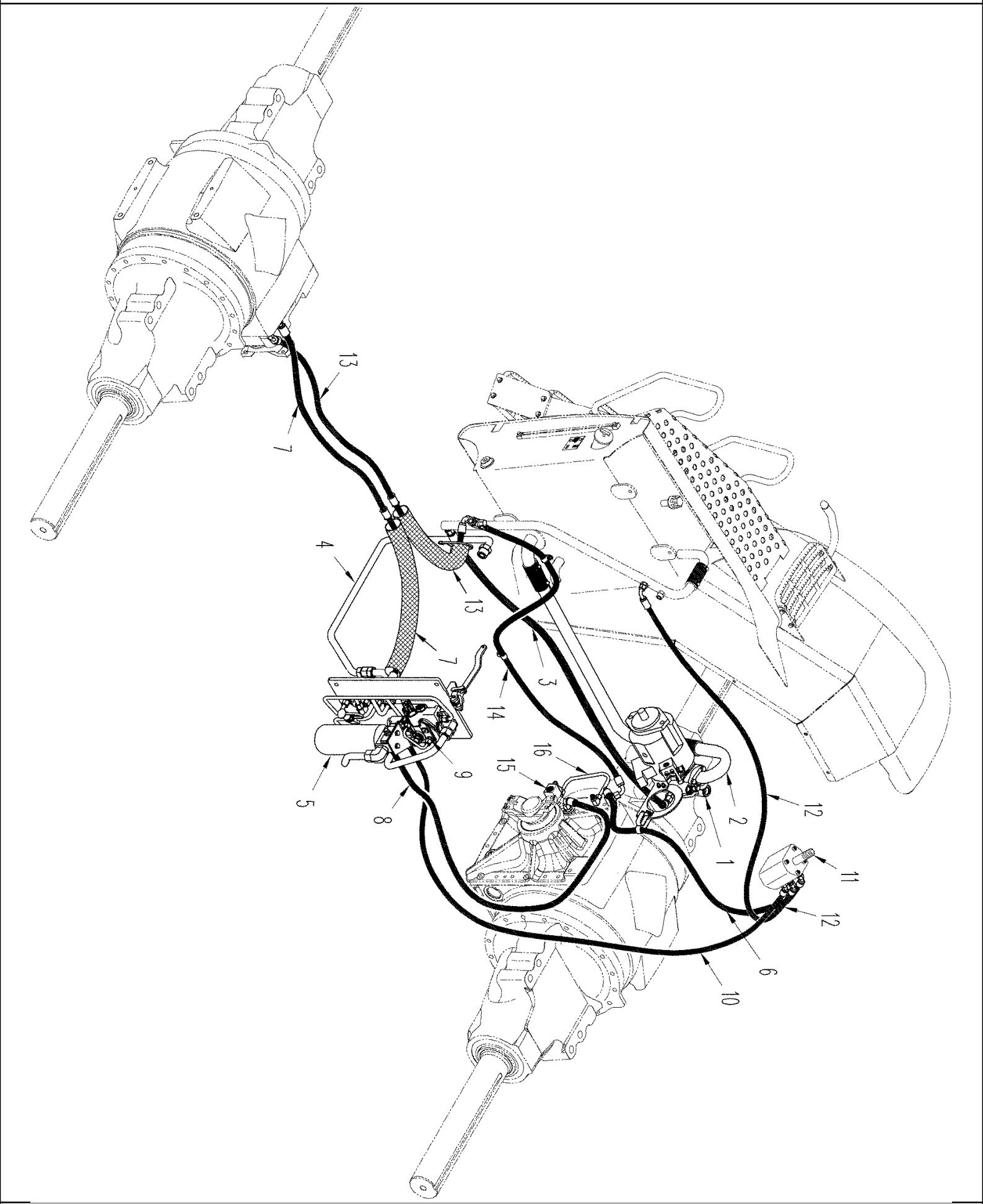

01 -06 PICTORIAL INDEX - CHARGE PUMP AND BRAKE CIRCUIT, TJ375, TJ425 MANUAL SHIFT

ссылка	Номер детали	Кол-во	Описание
1			Gear Pump, See Figure(s) : 08-35
2			Tube, Gear Pump Supply from Tank, See Figure(s) : 08-28 (1), 08-28 (2), 08-32
3			Hose, Gear Pump to Charge Return Tube, See Figure(s) : 08-28 (1), 08-28 (2), 08-32
4			Tube, Charge Return to Filter, See Figure(s) : 08-09
5			Filter, System Valve Assy, See Figure(s) : 08-04
6			Hose, Service Brake Line, See Figure(s) : 07-03 (1)
7			Hose, Tow Valve Supply for Rear Axle Park Brake, See Figure(s) : 07-04 (1), 07-05 (1)
8			Hose, Tow Valve Supply for Front Axle Park Brake, See Figure(s) : 07-04 (1), 07-05 (1)
9			Regulator Valve, See Figure(s) : 08-22
10			Hose, Regulator Output to Brake Valve, See Figure(s) : 07-04 (1), 07-05 (1)
11			Brake Valve, See Figure(s) : 07-02
12			Hose, Brake Valve Return to Tank, See Figure(s) : 07-04 (1), 07-05 (1)
13			Hose, Sevice Brake to Rear Axle, See Figure(s) : 07-03 (1)
14			Hose, Service Brake to Front Axle, See Figure(s) : 07-03 (1)
15			Solenoid, Differential Lock, Used with Differential Lock Applications, See Figure(s) : 08-51
16			Tube, Differential Lock, Used with Differential Lock Applications, See Figure(s) : 07-04 (1)

01 -06(01) PICTORIAL INDEX - CHARGE PUMP AND BRAKE CIRCUIT, TJ375, TJ425 MANUAL SHIFT

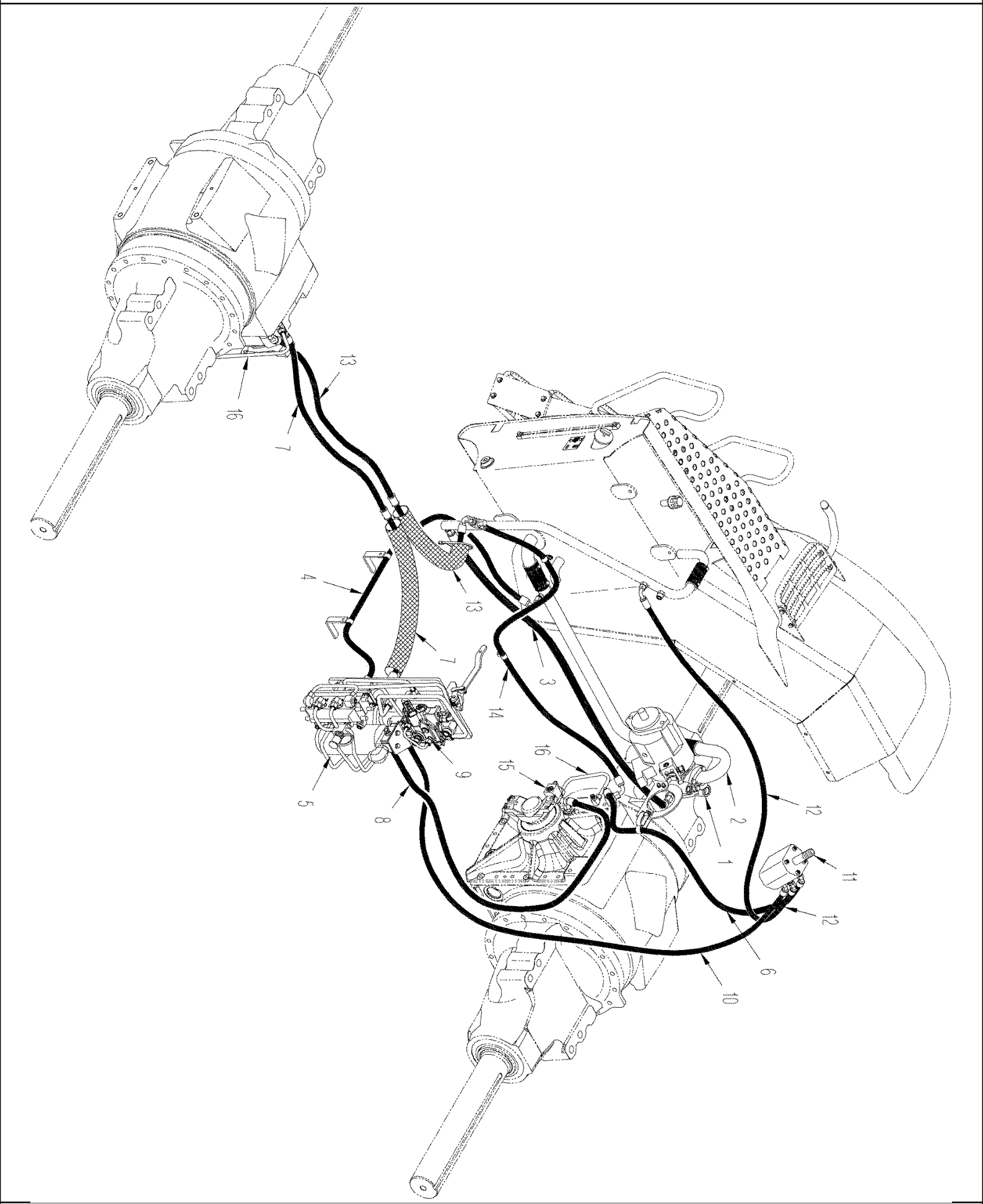

01 -06(01) PICTORIAL INDEX - CHARGE PUMP AND BRAKE CIRCUIT, TJ375, TJ425 MANUAL SHIFT

ссылка	Номер детали	Кол-во	Описание
1			Gear Pump, See Figure(s) : 08-35
2			Tube, Gear Pump Supply from Tank, See Figure(s) : 08-28 (1), 08-28 (2), 08-32
3			Hose, Gear Pump to Charge Return Tube, See Figure(s) : 08-28 (1), 08-28 (2), 08-32
4			Hose, Tow Valve Supply, See Figure(s) : 07-04 (2), 07-05 (2)
5			Filter, System Valve Assy, See Figure(s) : 08-04
6			Hose, Service Brake Line, See Figure(s) : 07-03 (1)
7			Hose, Tow Valve Supply for Rear Axle Park Brake, See Figure(s) : 07-04 (2), 07-05 (2)
8			Hose, Tow Valve Supply for Front Axle Park Brake, See Figure(s) : 07-04 (2), 07-05 (2)
9			Regulator Valve, See Figure(s) : 08-22
10			Hose, Regulator Output to Brake Valve, See Figure(s) : 07-04 (2), 07-05 (2)
11			Brake Valve, See Figure(s) : 07-02
12			Hose, Brake Valve Return to Tank, See Figure(s) : 07-04 (2), 07-05 (2)
13			Hose, Sevice Brake to Rear Axle, See Figure(s) : 07-03 (1)
14			Hose, Service Brake to Front Axle, See Figure(s) : 07-03 (1)
15			Solenoid, Differential Lock, Used with Differential Lock Applications, See Figure(s) : 08-51
16			Tube, Differential Lock, Used with Differential Lock Applications, See Figure(s) : 07-04 (2)

01 -07 PICTORIAL INDEX - CHARGE PUMP AND BRAKE CIRCUIT, TJ375 HD, TJ425 POWER SHIFT, TJ450

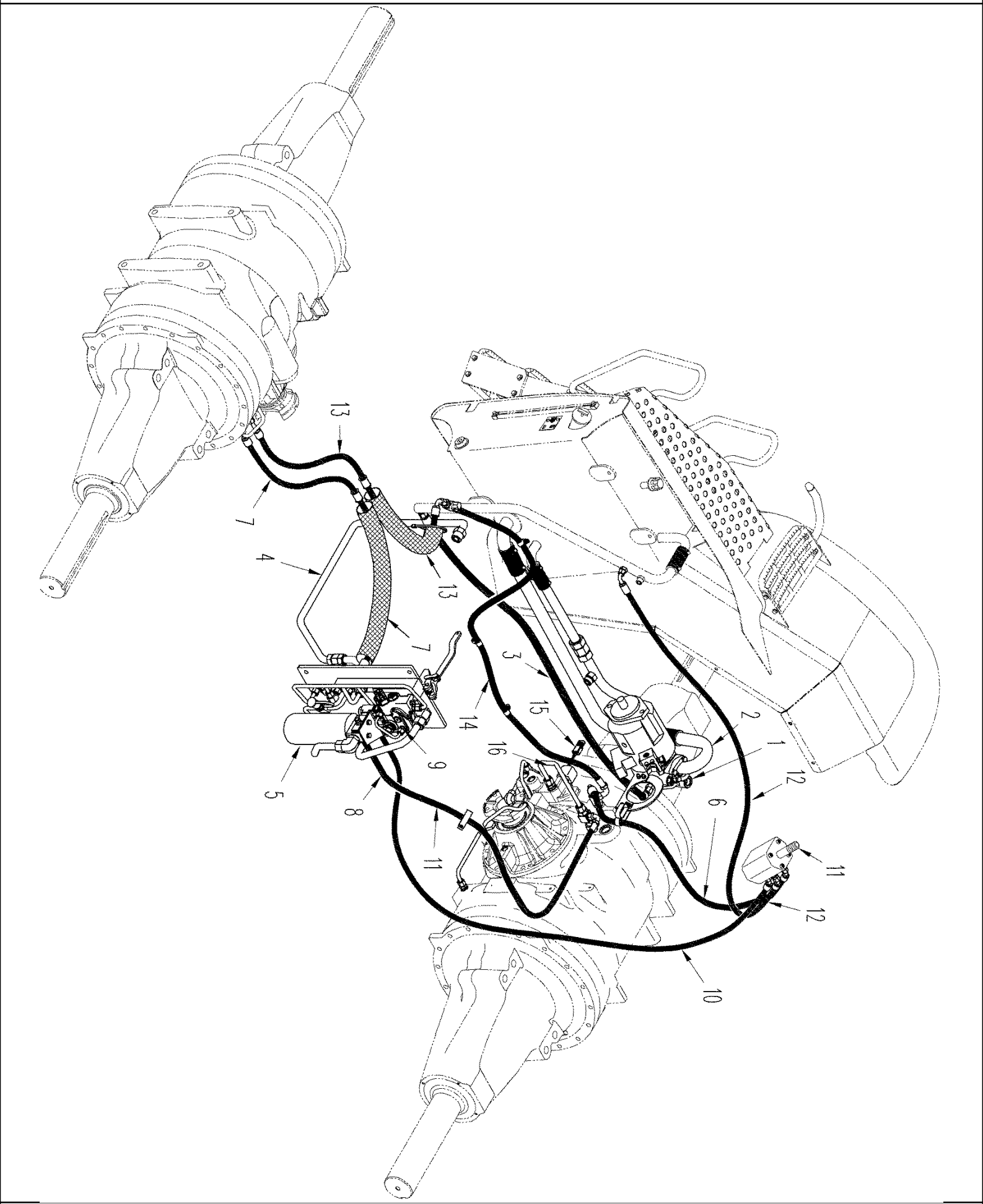

01 -07 PICTORIAL INDEX - CHARGE PUMP AND BRAKE CIRCUIT, TJ375 HD, TJ425 POWER SHIFT, TJ450

ссылка	Номер детали	Кол-во	Описание
1			Gear Pump, See Figure(s) : 08-35
2			Tube, Gear Pump Supply from Tank, See Figure(s) : 08-28 (1), 08-28 (2), 08-32
3			Hose, Gear Pump to Charge Return Tube
4			Tube, Charge Return to Filter, See Figure(s) : 08-09
5			Filter, System Valve Assy, See Figure(s) : 08-04
6			Hose, Service Brake Line, See Figure(s) : 07-03 (2)
7			Hose, Tow Valve Supply for Rear Axle Park Brake, See Figure(s) : 07-04 (3), 07-05 (3)
8			Hose, Tow Valve Supply for Front Axle Park Brake, See Figure(s) : 07-04 (3), 07-05 (3)
9			Regulator Valve, See Figure(s) : 08-22
10			Hose, Regulator Output to Brake Valve, See Figure(s) : 07-04 (3), 07-05 (3)
11			Brake Valve, See Figure(s) : 07-02
12			Hose, Brake Valve Return to Tank, See Figure(s) : 07-04 (3), 07-05 (3)
13			Hose, Service Brake to Rear Axle, See Figure(s) : 07-03 (2)
14			Hose, Service Brake from Front Axle, See Figure(s) : 07-03 (2)
15			Solenoid, Differential Lock, Used with Differential Lock Applications, See Figure(s) : 08-51
16			Tube, Differential Lock, Used with Differential Lock Applications, See Figure(s) : 07-04 (3)

01 -07(01) PICTORIAL INDEX - CHARGE PUMP AND BRAKE CIRCUIT, TJ375 HD, TJ425 POWER SHIFT, TJ450, TJ500

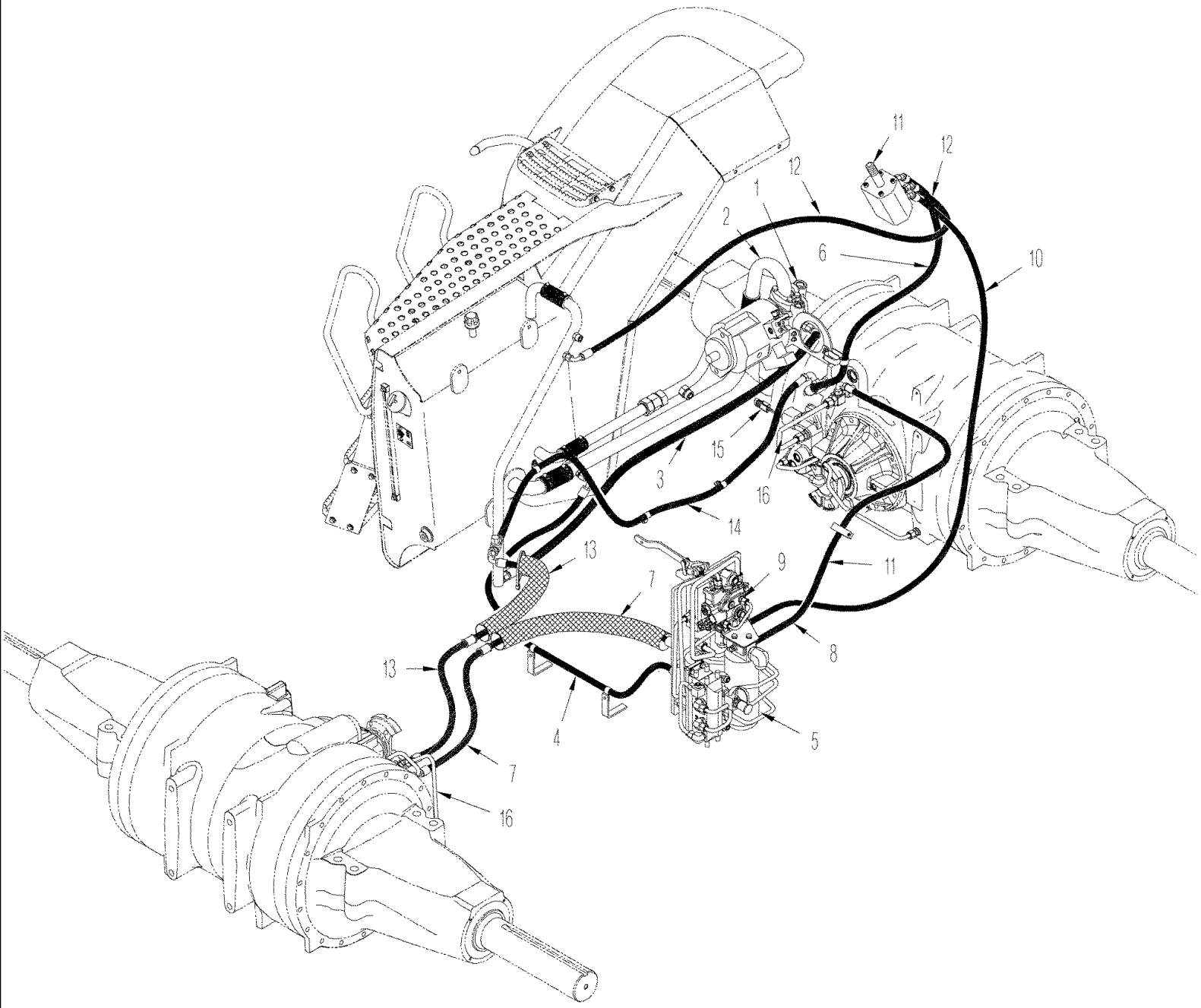

01 -07(01) PICTORIAL INDEX - CHARGE PUMP AND BRAKE CIRCUIT, TJ375 HD, TJ425 POWER SHIFT, TJ450, TJ500

ссылка	Номер детали	Кол-во	Описание
1			Gear Pump, See Figure(s) : 08-35
2			Tube, Gear Pump Supply from Tank, See Figure(s) : 08-28 (1), 08-28 (2), 08-32
3			Hose, Gear Pump to Charge Return Tube
4			Hose, Tow Valve Supply, See Figure(s) : 07-04 (4), 07-05 (4)
5			Filter, System Valve Assy, See Figure(s) : 08-04
6			Hose, Service Brake Line, See Figure(s) : 07-03 (2)
7			Hose, Tow Valve Supply for Rear Axle Park Brake, See Figure(s) : 07-04 (4), 07-05 (4)
8			Hose, Tow Valve Supply for Front Axle Park Brake, See Figure(s) : 07-04 (4), 07-05 (4)
9			Regulator Valve, See Figure(s) : 08-22
10			Hose, Regulator Output to Brake Valve, See Figure(s) : 07-04 (4), 07-05 (4)
11			Brake Valve, See Figure(s) : 07-02
12			Hose, Brake Valve Return to Tank, See Figure(s) : 07-04 (4), 07-05 (4)
13			Hose, Service Brake to Rear Axle, See Figure(s) : 07-03 (2)
14			Hose, Service Brake from Front Axle, See Figure(s) : 07-03 (2)
15			Solenoid, Differential Lock, Used with Differential Lock Applications, See Figure(s) : 08-51
16			Tube, Differential Lock, Used with Differential Lock Applications, See Figure(s) : 07-04 (4)

01 -08 PICTORIAL INDEX - CHARGE PUMP AUXILIARY REMOTE CIRCUIT, STANDARD HYDRAULICS

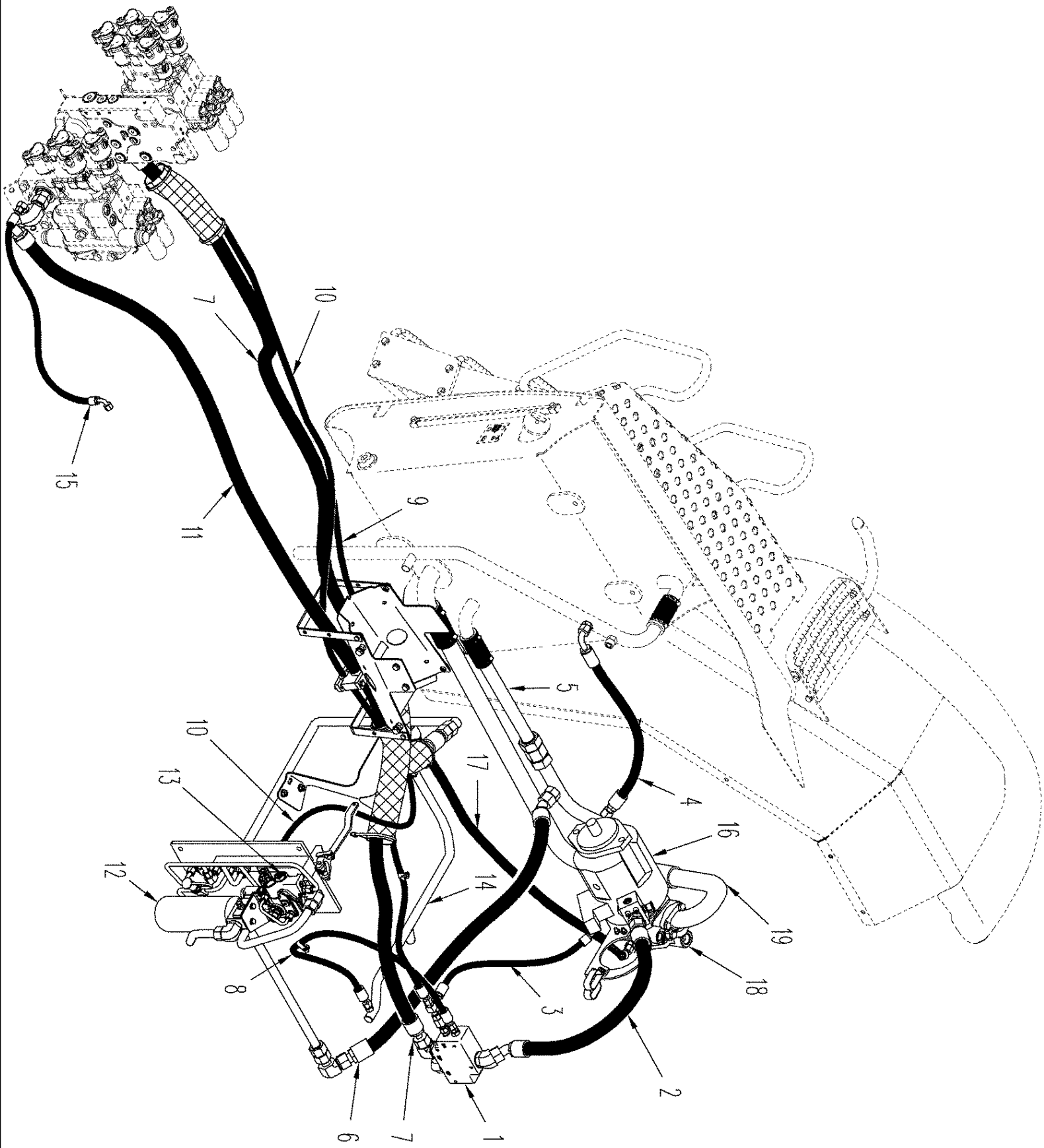

01 -08 PICTORIAL INDEX - CHARGE PUMP AUXILIARY REMOTE CIRCUIT, STANDARD HYDRAULICS

ссылка	Номер детали	Кол-во	Описание
1			Priority Valve, See Figure(s) : 08-31
2			Hose, Priority Valve Supply from Piston Pump, See Figure(s) 08-28 (1), 08-28 (2)
3			Hose, Pump Load Sense, See Figure(s) : 08-28 (1), 08-28 (2)
4			Hose, Case Drain, See Figure(s) : 08-28 (1), 08-28 (2)
5			Tube, Charge Pump Supply, See Figure(s) : 08-28 (1), 08-28 (2)
6			Hose, Return, See Figure(s) : 08-28 (1), 08-28 (2)
7			Hose, Auxiliary Remote Supply, See Figure(s) : 08-26, 08-27
8			Hose, Priority Valve Return, See Figure(s) : 08-28 (1), 08-28 (2)
9			Hose, Auxiliary Remote Load Sense, See Figure(s) : 08-26, 08-27
10			Hose, Gear Pump Pilot Pressure, Used with Electronic Remote Applications, See Figure(s) : 08-26
11			Hose, Auxiliary Remote Return, See Figure(s) : 08-26, 08-27
12			Filter, System Valve Assy, See Figure(s) : 08-04
13			Regulator Valve, See Figure(s) : 08-22
14			Tube, See Figure(s) : 08-09 (01), 08-13 (01)
15			Hose, Pilot Pressure Return to Rear Axle, See Figure(s) : 08-09 (01), 08-14 (01)
16			Piston Pump, See Figure(s) : 08-30
17			Hose, Charge Pump Outlet, See Figure(s) : 08-28 (1), 08-28 (2)
18			Gear Pump, See Figure(s) : 08-35
19			Tube, Gear Pump Supply, See Figure(s) : 08-28 (1), 08-28 (2)

01 -09 PICTORIAL INDEX - CHARGE PUMP AUXILIARY REMOTE CIRCUIT, HIGH OUTPUT HYDRAULICS

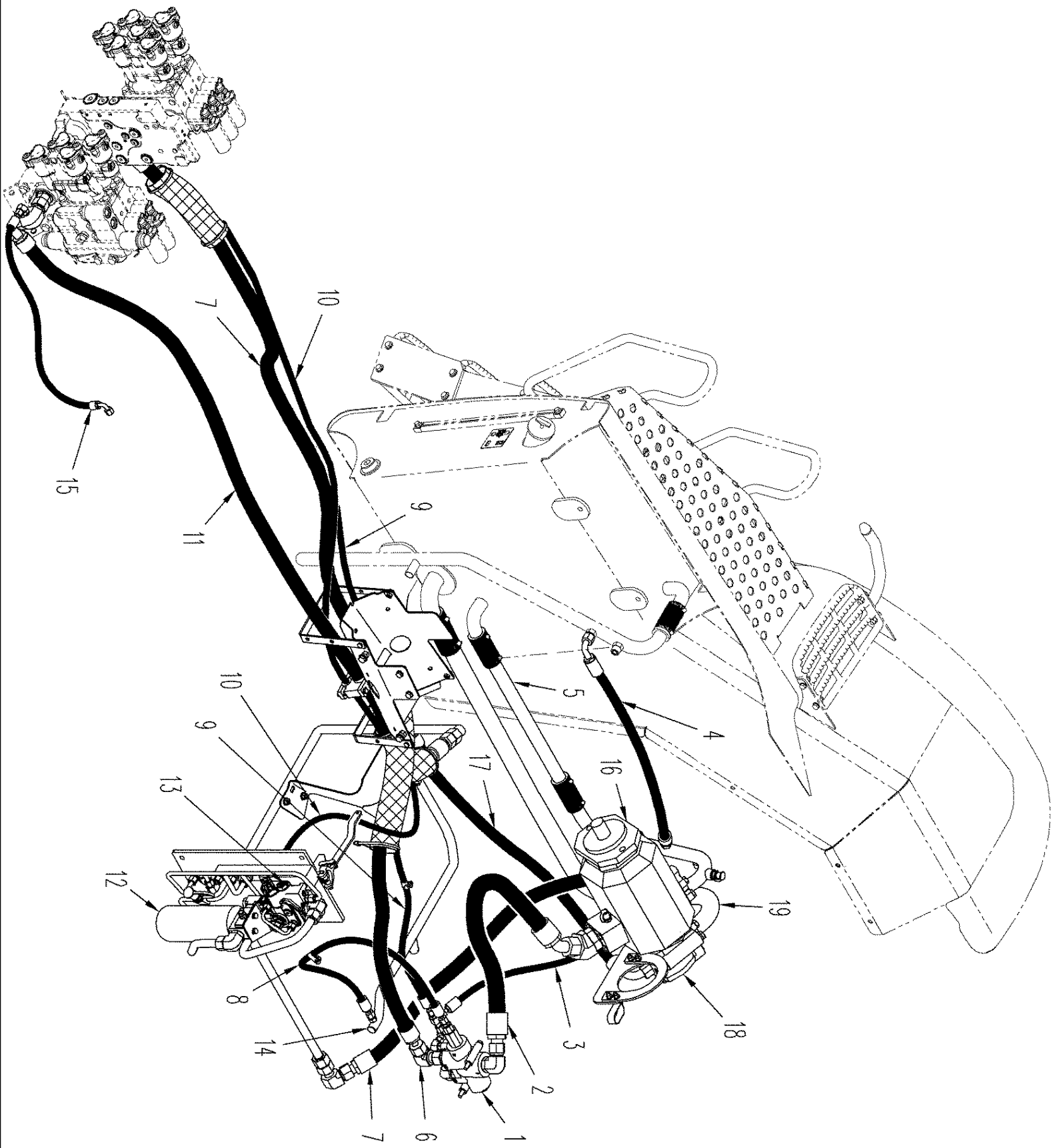

01 -09 PICTORIAL INDEX - CHARGE PUMP AUXILIARY REMOTE CIRCUIT, HIGH OUTPUT HYDRAULICS

ссылка	Номер детали	Кол-во	Описание
1			Priority Valve, See Figure(s) : 08-36
2			Hose, Priority Valve Supply from Piston Pump, See Figure(s) : 08-32
3			Hose, Charge Pump Load Sense, See Figure(s) : 08-32
4			Hose, Case Drain, See Figure(s) : 08-32
5			Tube, Charge Pump Supply, See Figure(s) : 08-32
6			Hose, Return, See Figure(s) : 08-26, 08-27
7			Hose, Supply to Auxiliary Remote, See Figure(s) : 08-32
8			Hose, Priority Valve Return, See Figure(s) : 08-32
9			Hose, Auxiliary Remote Load Sense, See Figure(s) : 08-26, 08-27
10			Hose, Gear Pump Pilot Pressure, Used with Electronic Remote Application, See Figure(s) : 08-26
11			Hose, Auxiliary Remote Return, See Figure(s) : 08-26, 08-27
12			Filter, System Valve Assy, See Figure(s) : 08-04
13			Regulator Valve, See Figure(s) : 08-22
14			Tube, Return, See Figure(s) : 08-08, 08-13
15			Hose, Pilot Pressure Return to Rear Axle, See Figure(s) : 08-09 (01), 08-14 (01)
16			Piston Pump, See Figure(s) : 08-34
17			Hose, Charge Pump Outlet, See Figure(s) : 08-26, 08-27
18			Gear Pump, See Figure(s) : 08-35
19			Tube, Gear Pump Supply, See Figure(s) : 08-32

01 -10 PICTORIAL INDEX - MANUAL AUXILIARY REMOTE, BSN RVS001927

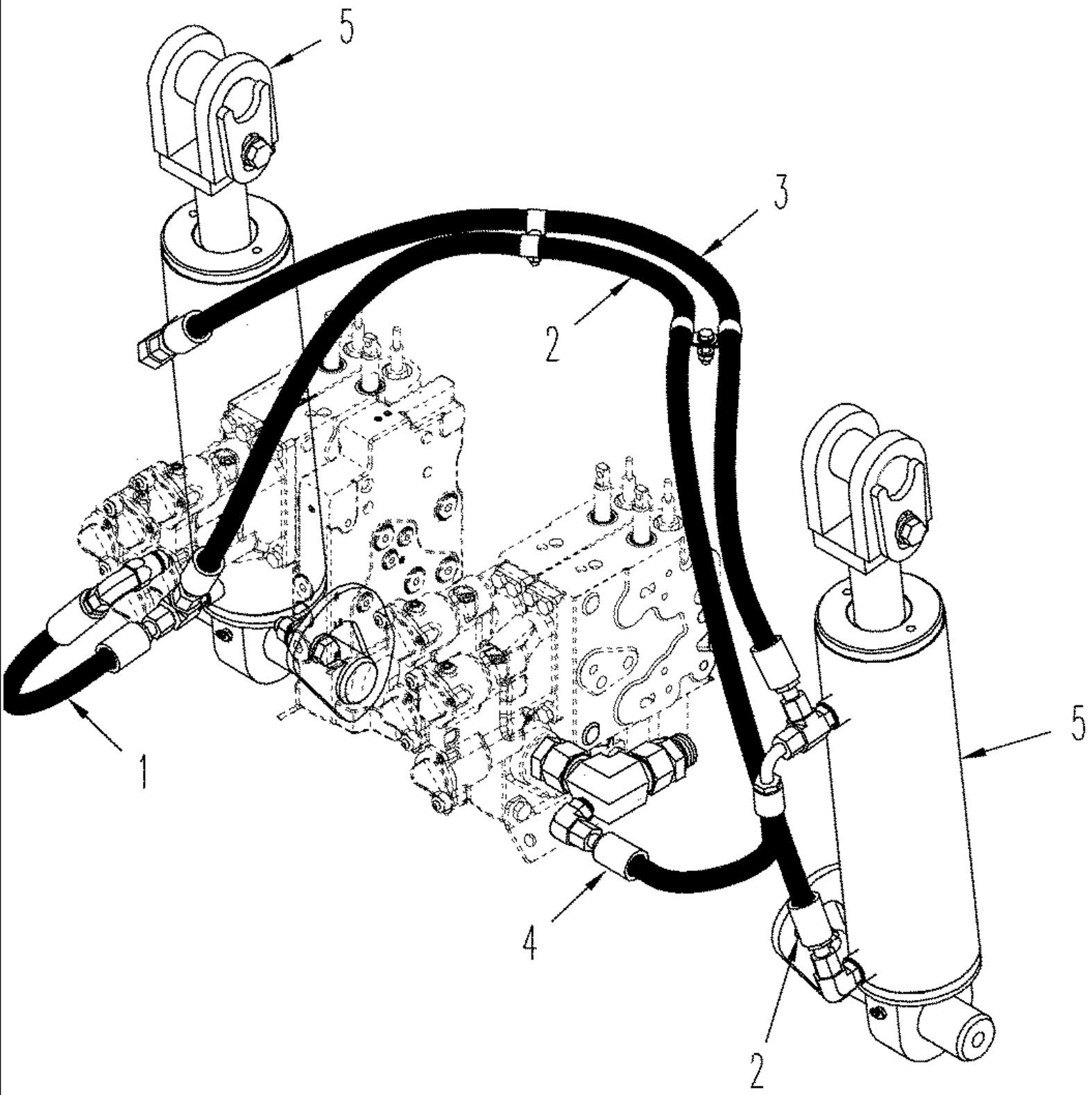

01 -10 PICTORIAL INDEX - MANUAL AUXILIARY REMOTE, BSN RVS001927

ссылка	Номер детали	Кол-во	Описание
1			Hose, Left-Hand Cylinder Supply, See Figure(s) : 08-48
2			Hose, Right-Hand Cylinder Supply, See Figure(s) : 08-48
3			Hose, Left-Hand Cylinder Return, See Figure(s) : 08-48
4			Hose, Cylinder Return to Tank, See Figure(s) : 08-48
5			Cylinder, Three Point Hitch Lift, See Figure(s) : 08-50

01 -11 PICTORIAL INDEX - ELECTRONIC AUXILIARY REMOTE

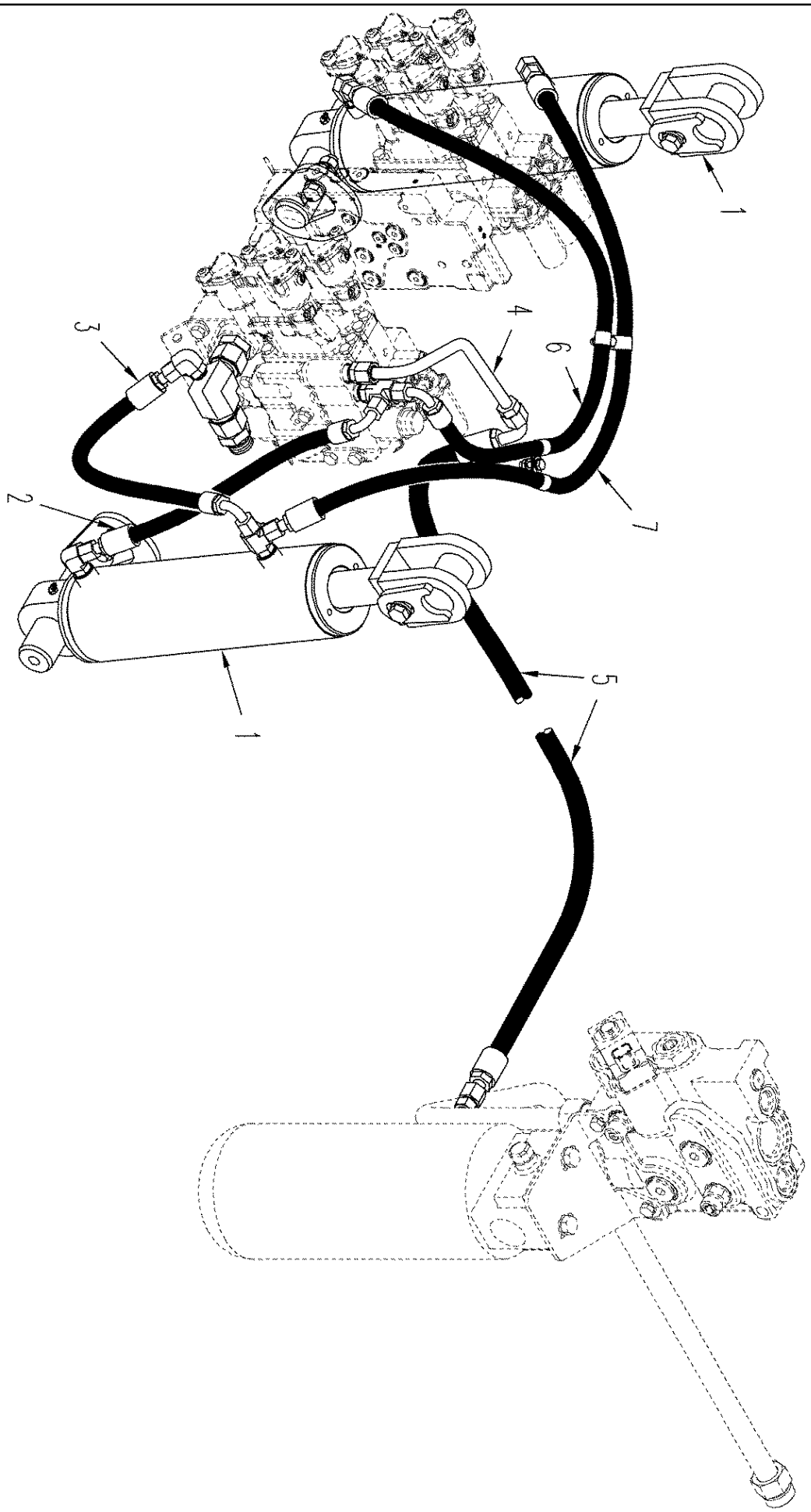

01 -11 PICTORIAL INDEX - ELECTRONIC AUXILIARY REMOTE

ссылка	Номер детали	Кол-во	Описание
1			Cylinder, Lift, See Figure(s) : 08-50
2			Hose, Cylinder Supply from Hitch Valve, See Figure(s) : 08-49
3			Hose, Return to Tank, See Figure(s) : 08-49
4			Tube, Return from Hitch Valve, See Figure(s) : 08-49
5			Hose, Return to Tank, See Figure(s) : 08-49
6			Hose, Left-Hand Cylinder Supply, See Figure(s) : 08-49
7			Hose, Left-Hand Cylinder Return, See Figure(s) : 08-49

01 -12 PICTORIAL INDEX - POWER TAKEOFF TRANSFER CASE LUBRICATION, BSN RVS001801, TJ375

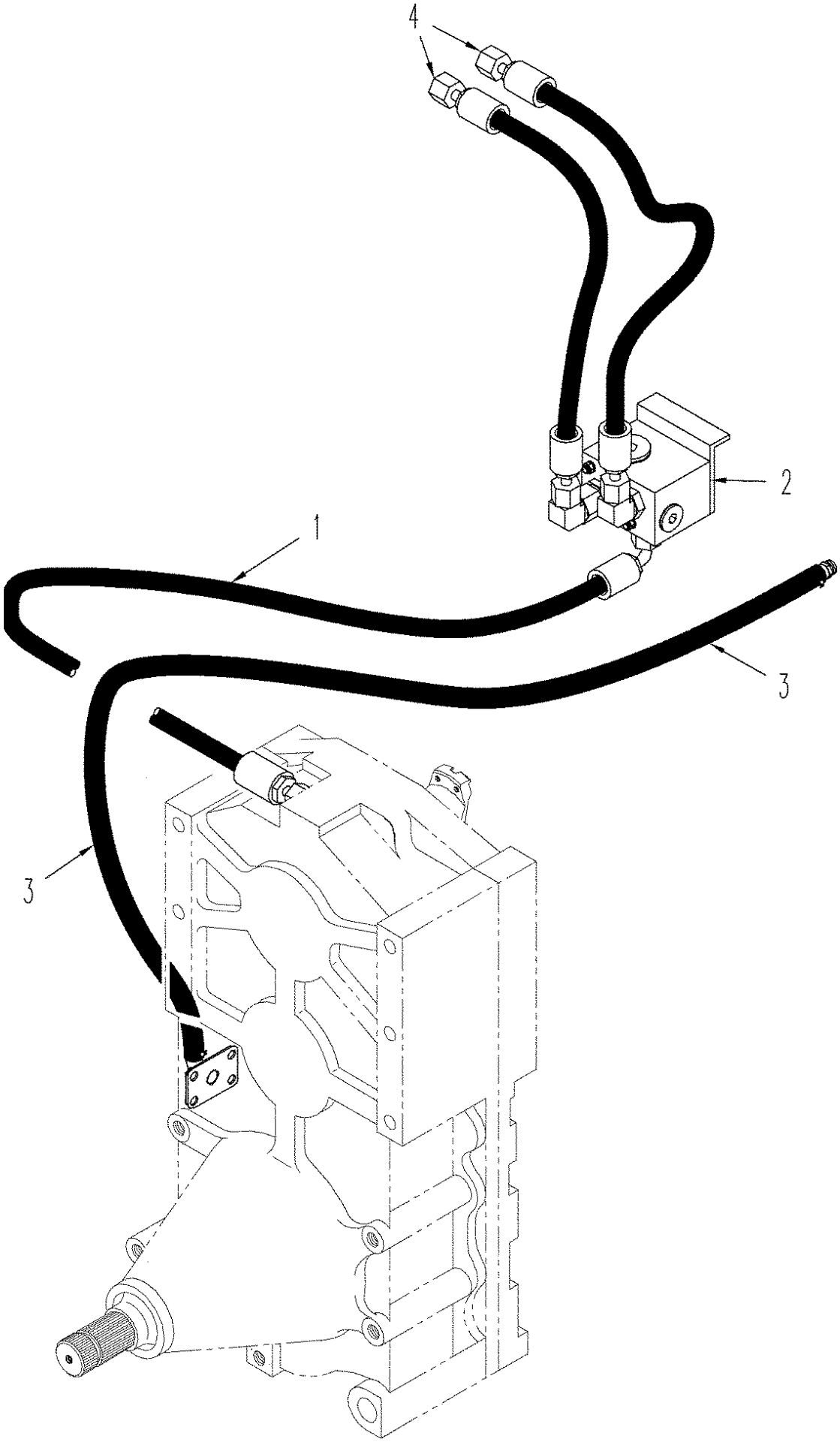

BSN RVS001801

01 -12 PICTORIAL INDEX - POWER TAKEOFF TRANSFER CASE LUBRICATION, BSN RVS001801, TJ375

ссылка	Номер детали	Кол-во	Описание
1			Hose, Transfer CAse Supply from Jet Pump, See Figure(s) : 06-36
2			Jet Pump, See Figure(s) : 06-36
3			Hose, Transfer Case Return to Differential, See Figure(s) : 06-36
4			Hose, Jet Pump to Differential, See Figure(s) : 06-36

01 -13 PICTORIAL INDEX - POWER TAKEOFF TRANSFER CASE LUBRICATION, TJ375 HD, TJ425, TJ450

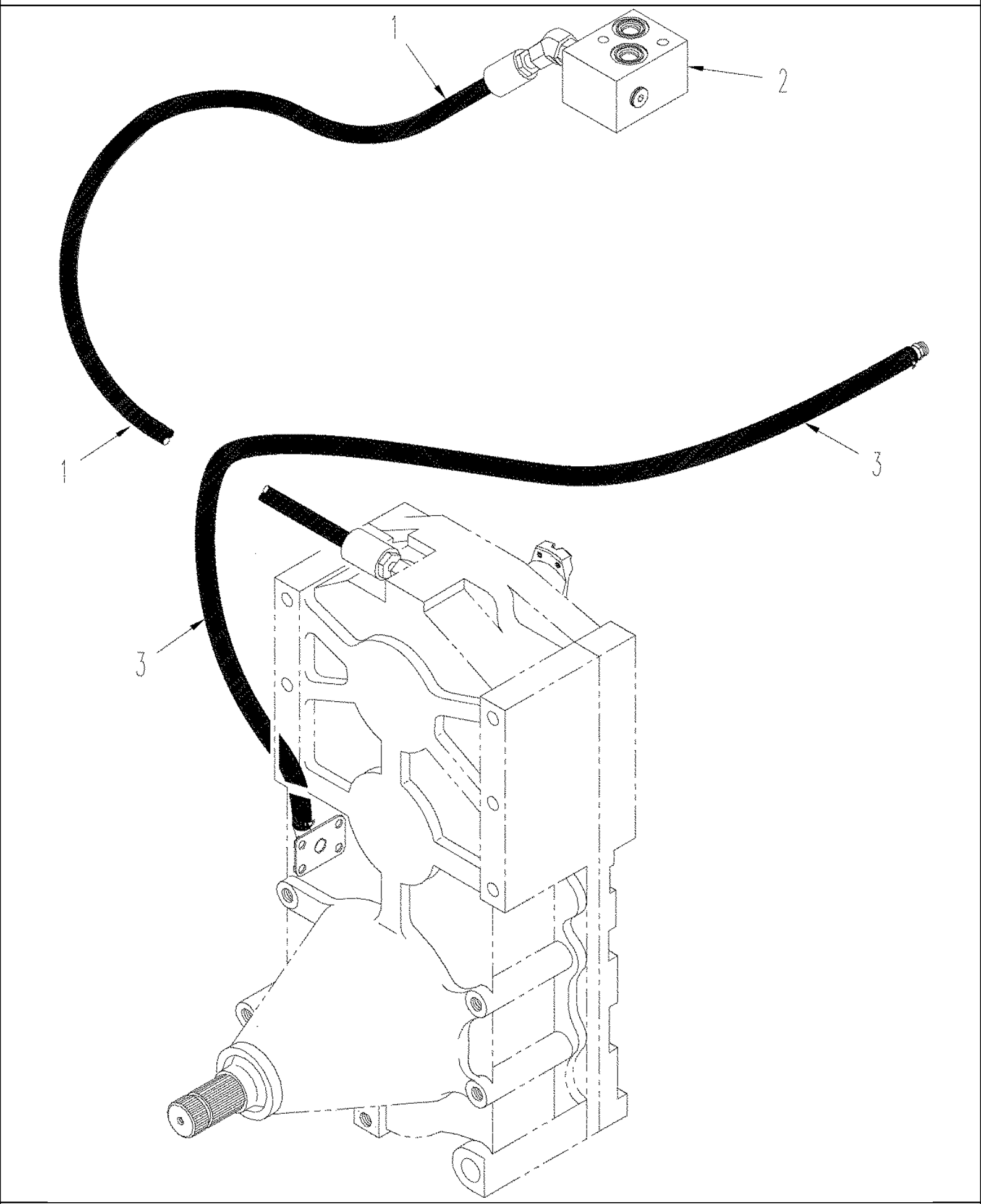

01 -13 PICTORIAL INDEX - POWER TAKEOFF TRANSFER CASE LUBRICATION, TJ375 HD, TJ425, TJ450

ссылка	Номер детали	Кол-во	Описание
1			Hose, Transfer Case Supply, See Figure (s) : 06-37
2			Jet Pump, See Figure(s) : 06-37
3			Hose, Transfer Case Return to Differential, See Figure(s) : 06-37

01 -14 PICTORIAL INDEX - POWER TAKEOFF TRANSFER CASE LUBRICATION, ASN RVS001801

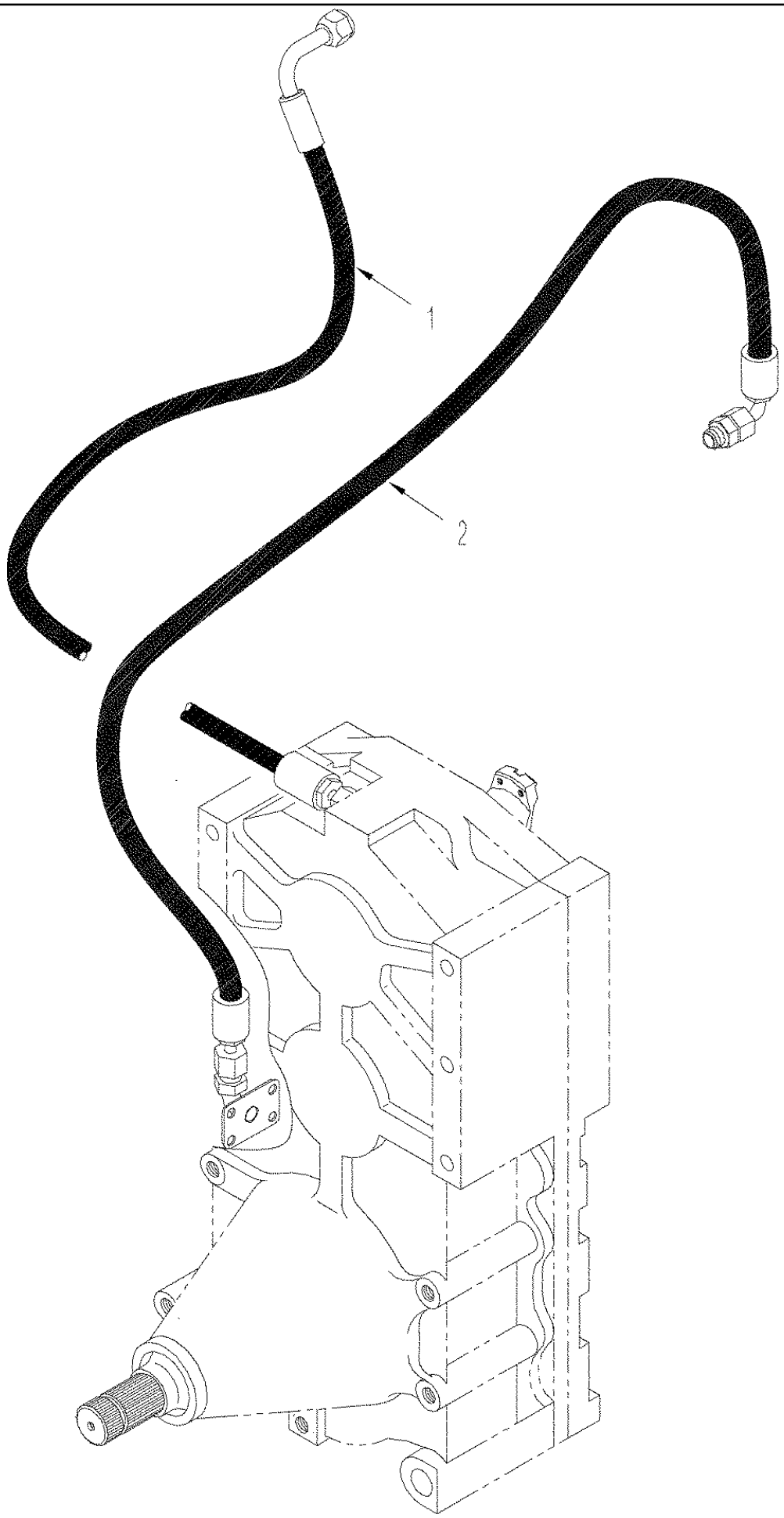

ASN RVS001801

01 -14 PICTORIAL INDEX - POWER TAKEOFF TRANSFER CASE LUBRICATION, ASN RVS001801

ссылка	Номер детали	Кол-во	Описание
1			Hose, Transfer Case Supply from Axle Air / Lube Pump, See Figure(s) : 06-36 (01), 06-37 (01)
2			Hose, Transfer Case to Rear Differential, See Figure(s) : 06-36 (01), 06-37 (01)

01 -16 PICTORIAL INDEX - MEGA FLOW HYDRAULIC CIRCUITRY

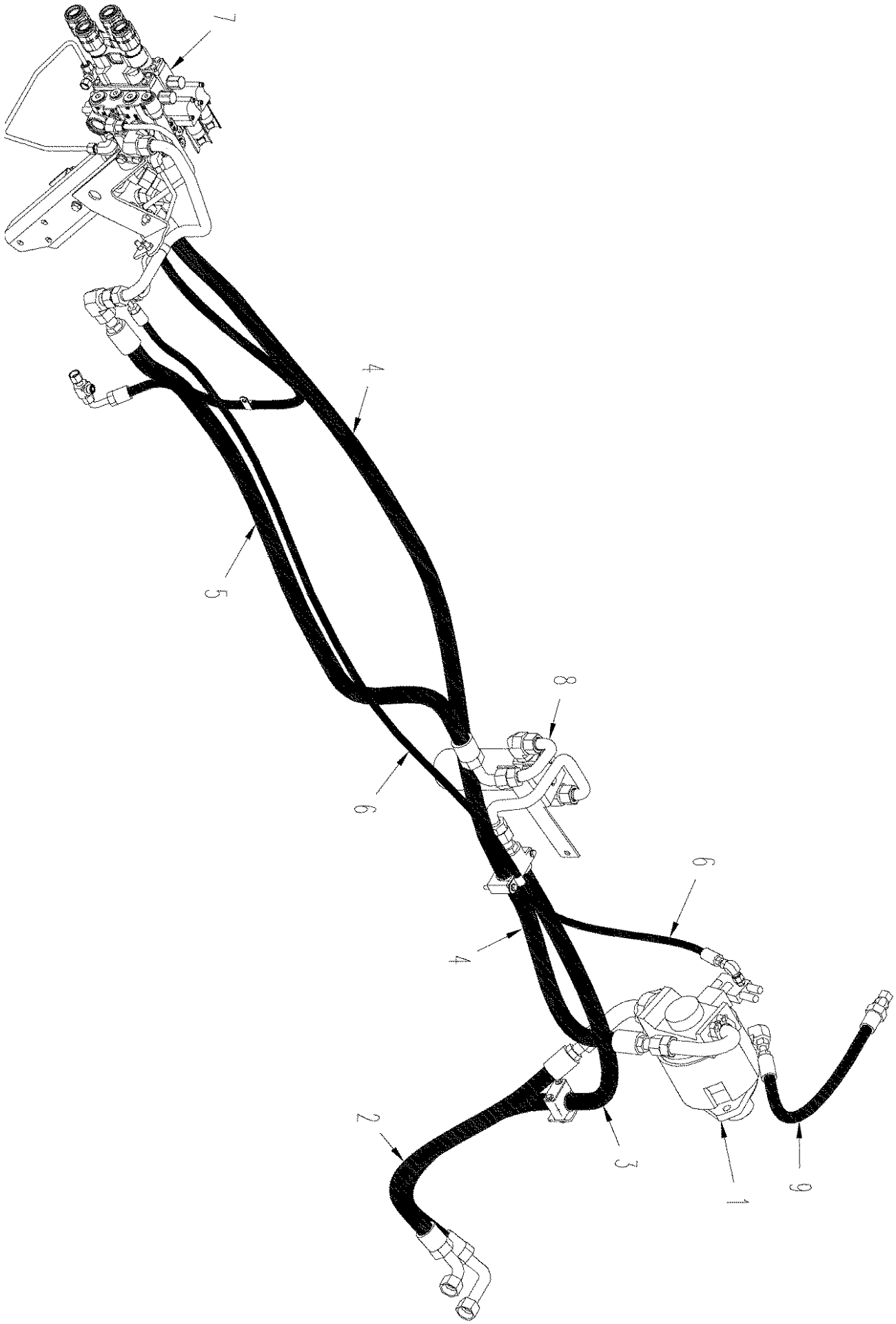

01 -16 PICTORIAL INDEX - MEGA FLOW HYDRAULIC CIRCUITRY

ссылка	Номер детали	Кол-во	Описание
1			Gear Pump, See Figure(s) : 08-59
2			Hose, Gear Pump Supply, See Figure(s) : 08-55
3			Hose, Return, See Figure(s) : 08-55
4			Hose, Remote Valve Supply, See Figure(s) : 08-55
5			Hose, Drain, See Figure(s) : 08-55
6			Hose, Load Sense, See Figure(s) : 08-55
7			Remote Auxiliary Valve, See Figure(s) : 08-56
8			Filter, See Figure(s) : 08-60
9			Hose, See Figure(s) : 08-55

ART NOT AVAILABLE

TJ375 TRACTOR - General

DLR STOCK MANDATORY STOCKING LIST

ссылка	Номер детали	Кол-во	Описание
	300644	2	RING, SNAP, M40, Int, Ring, Snap, Int, M40
	301652	4	RING, SNAP, M110, Int,
	370014	2	RING, SNAP, M130, Int, Ring, Snap, Int, M130
	519381	1	O-RING, -338, 70 Duro, 3.1" ID x .210" Thk, 3.125" ID x .210" Thk
	86639319	4	WASHER, 26 x 44 x 5 mm
	87414866	1	RELAY,
	121410A1	5	FUSE, 5 Amp
	121411A1	5	FUSE, 7.5 Amp
	121412A1	5	FUSE, 10 Amp
	121413A1	5	FUSE, 15 Amp
	121414A1	5	FUSE, 20 Amp
	121415A1	5	FUSE, 25 Amp
	121416A1	5	FUSE, 30 Amp
	325289A1	1	BELT, Water Pump
	87437226	1	BELT, Accessory Drive, Alternator & A/C
	355341A1	1	SWITCH, Clutch
	362578A1	1	VALVE, Pulse With Modulation
	87408712	1	FILTER, AIR, Primary
	87417042	1	FILTER, ELEMENT, Primary, TJ500
	87408713	1	FILTER, AIR, Secondary
	87417043	1	FILTER, ELEMENT, Secondary, TJ500
	368459A1	2	RELAY, 70 Amp
	370608A1	1	KIT, Kit
	370610A1	1	COIL,
	370632A1	1	TUBE,
	371739A1	2	COIL, Solenoid
	375450A1	2	O-RING,
	87409372	2	Head, Filter, Trans.
	375512A1	2	O-RING,
	375514A1	2	SEAL, OIL, PTO
	375553A1	2	GASKET,
	386751A1	2	FILTER, Recirculated Air
	387735A1	2	KIT, SEALS,
	387790A1	2	KIT, SEALS,
	398441A1	1	KIT, SEALS, Trans.
	417927A1	1	SWITCH,
	427581A1	1	GASKET, Master Clutch
	428676A1	2	O-RING, Filter
	87408714	2	FILTER, Conical
	86018758	1	FILTER, HYDRAULIC OIL, Main Hydraulic (Below Battery)
	441700A1	2	FILTER, Engine Oil
	441701A1	2	FILTER, FUEL,
	441702A1	2	FILTER, COOLANT,
	A186004	1	SENSOR, Engine RPM
	B505572	72	OIL, HYDRAULIC, 5 Gal

ART NOT AVAILABLE

TJ375 TRACTOR - General

DLR STOCK RECOMMENDED STOCKING LIST

ссылка	Номер детали	Кол-во	Описание
	43263	8	BOLT, Hex, M12 x 60, 10.9, M12 x 1.75 x 60, CL10.9,
	392530	6	NUT, M16, Cl 10,
	9617975	2	O-RING, -234, 70 Duro, 2.984" ID x .139" Thk, 2.984" ID x .139" Thk
	9825518	2	O-RING, -121, 70 Duro, 1.049" ID x .103" Thk, 1.049" ID x .070" Thk
	9843612	2	BOLT, Hex, M20 x 100, 10.9, Cap, HH, M20 x 2.5 x 100, CL10.9,
	9846950	8	BOLT, Hex, M20 x 90, 10.9, Cap, HH, M20 x 2.5 x 90, CL10.9,
	14458081	2	O-RING, -122, Cl 7, 1.112" ID x .103" Thk,
	14463681	2	O-RING, -218, Cl 7, 1.234" ID x .139" Thk,
	86624983	6	BOLT, Hex, M16 x 110, 10.9,
	86625266	12	WASHER, M17.5 x 30 x 4, HT,
	86637742	4	O-RING, -246, 70 Duro, 4.484" ID x .139" Thk, 4.484" ID x .139" Thk
	86639035	4	BOLT, Hex, M20 x 110, 10.9, Full Thd, M20 x 110, CL 10.9
	86639145	2	BOLT, Hex, M20 x 130, 10.9, M20 x 130, CL 10.9
	827-22080	10	BOLT, Hex, M22 x 80, 10.9, Full Thd, M22 x 80, CL 10.9
	86639171	10	BOLT, Hex, M22 x 130, 10.9, M22 x 130, CL 10.9
	86639318	10	WASHER,
	86639325	2	WASHER, M10 x 24.5 x 3, HT,
	86643884	1	SEAL,
	86643885	2	GASKET,
	86643886	2	GASKET,
	86643887	2	GASKET,
	177250A1	1	SWITCH, LIGHTS,
	1964726C1	2	BEARING, BALL,
	1964730C1	2	BEARING, BALL,
	1990756C2	1	VALVE,
	220455A3	2	KNOB,
	228273A1	6	BOLT, M20 x 110, CL 10.9, Hub
	235676A1	1	CONNECTOR,
	239942A3	1	SEAL, Axle
	256305A2	1	POTENTIOMETER, Draft Control
	258010A2	1	SWITCH, Shift
	259012A1	1	POTENTIOMETER,
	86994156	2	FILTER, AIR, A/C
	87432424	1	SEAL, Axle
	279266A1	1	SWITCH,
	283094A1	4	FILTER,
	297017A1	1	MIRROR,
	3079389R1	1	CAPACITOR,
	324437A1	1	MIRROR, REPLACEMENT,
	329737A1	1	HOSE,
	346351A1	1	HOSE,
	363226A1	1	BUMPER, Door
	87434677	1	SENDER UNIT, Fuel
	371737A1	2	VALVE, SOLENOID,
	371738A1	2	KIT, O-Ring

TJ375 TRACTOR - General

DLR STOCK RECOMMENDED STOCKING LIST

ссылка	Номер детали	Кол-во	Описание
	375720A1	1	PIN, Drawbar, Cat. 4, 2"
	376530A1	2	SUPPORT, Step
	384116A1	2	SUPPORT, Step
	391998A1	1	HOSE, LARGE,
	393878A1	1	PIN, Quick Release
	399285A1	1	UNIT,
	404450A1	2	SENSOR, Trans.
	451767A1	1	BEARING, Pillow Block
	413678A1	2	CLAMP,
	418506A1	1	SWITCH, Park Brake
	427514A1	2	SEAL, OIL,
	427524A1	2	BREATHER,
	428156A1	1	PLUG,
	428159A1	2	SEAL, OIL,
	428162A1	2	O-RING,
	428165A1	2	O-RING,
	86000308	1	KIT, Spider Bearing, 8C
	435415A1	1	GASKET,
	435439A1	2	MOUNT, RUBBER,
	92269C1	2	LAMP, WORK,
	A162191	1	CAP, Fuel
	A189040	1	BELT,
	D95144	2	SEALRING,
	G102287	2	SEAL,
	G107923	2	SEAL,
	G32122	2	RING,
	L115548	2	CLAMP,
	L115549	2	CLAMP,
	N13313	2	SEAL,
	S109445	2	RING,
	S8820S00F	2	SEAL, OIL,
	87409372	2	Head, Filter, Trans.

02 -01 RADIATOR - HOSES AND TUBES

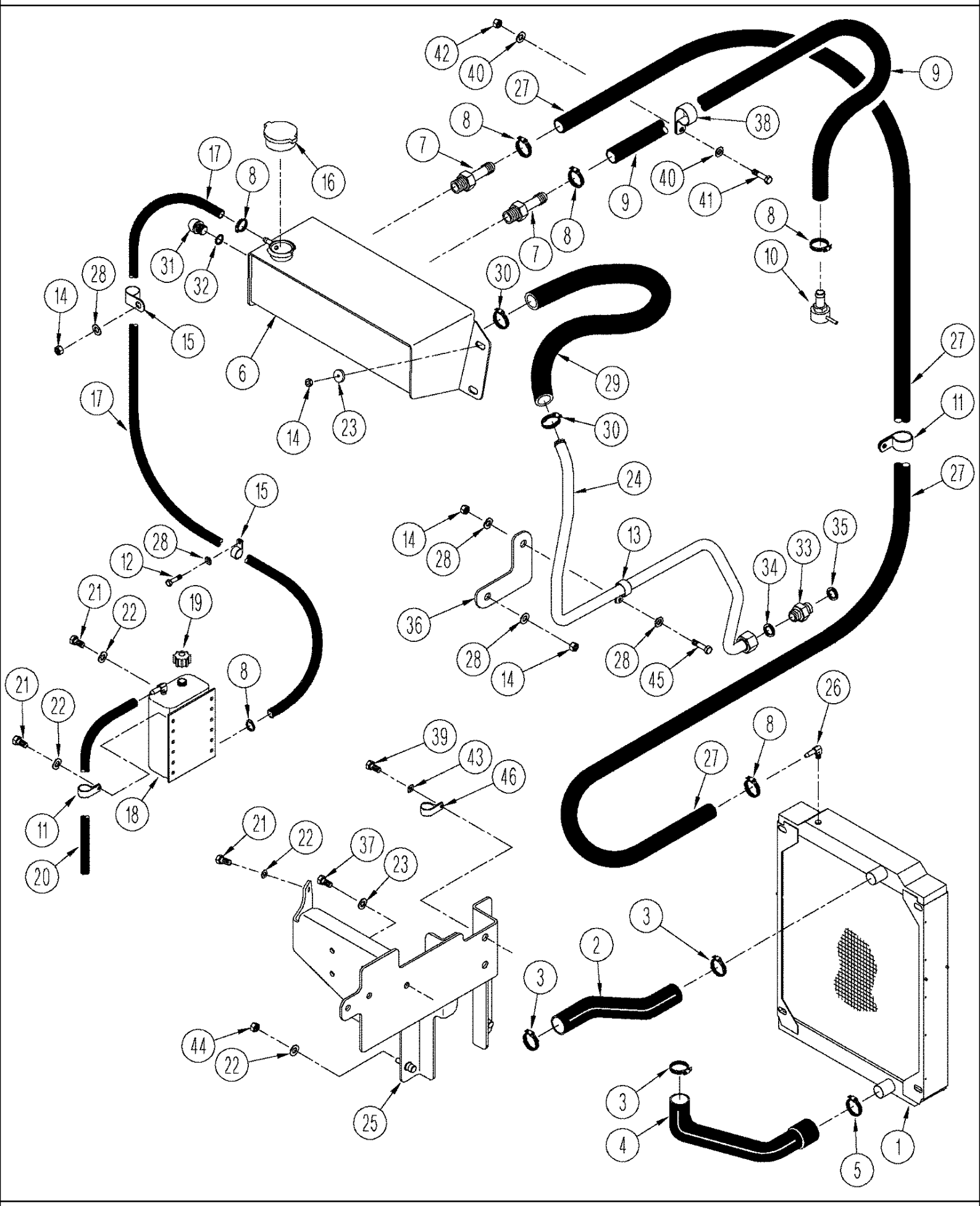

TJ375 TRACTOR - Engine

02 -01 RADIATOR - HOSES AND TUBES

ссылка	Номер детали	Кол-во	Описание
1	294025A2	1	RADIATOR,
2	401385A3	1	HOSE, Upper
3	L115548	3	CLAMP,
4	346351A1	1	HOSE, Lower
5	L115549	1	CLAMP,
6	391667A2	1	TANK, Surge
7	86624128	2	FITTING, 1/4" Hose x 1/8" NPTF, Barbed, 1/4 x 1/8, Hose Stem
8	82012717	6	CLAMP, HOSE, 1/4 - 5/8
9	435449A1	1	HOSE, 711 mm (28 in), Surge Tank, Cut From : 443078A1
10	293823A2	1	FITTING,
11	86010402	3	CLAMP, 1/2", Insul, 3/8" Bolt,
12	9861444	5	BOLT, Hex, M10 x 20, 10.9, Full Thd, M10 x 20; 10.9
14	86500689	5	NUT, M10, Cl 10, M10; 10.9
15	257492	4	CLAMP, 9/16", Insul, 3/8" Bolt, 9/16 ID
16	435544A1	1	CAP, RADIATOR,
17	427139A1	1	HOSE, 2464 mm (97 in), Cut From : 443083A1
18	435543A1	1	RESERVOIR, Coolant Recovery
19	238903A1	1	CAP, FILLER,
20	435460A1	1	HOSE, 203 mm (8 in), Overflow, Cut From : 87769CX
21	43233	1	BOLT, Hex, M8 x 20, 10.9, Cap, HH, CL 10.9, M8 x 1.25 x 20
22	86624184	6	WASHER, M8 x 16 x 1.6, 9 x 17 x 1,6 mm
23	86625253	6	WASHER, M11 x 24 x 2, 11 x 24 x 2 mm
24	413507A1	1	TUBE, Coolant Fill
25	430257A1	1	SUPPORT, Bracket, BSN RVS002701
25	87431244	1	BRACKET, Support, ASN RVS002701
26	86637719	1	FITTING, 90є, 1/4" Hose x 1/8" NPTF, Barbed, 90, 1/4 barb x 1/8 PT, Hose Stem
27	366662A1	1	HOSE, FLEXIBLE, 1206 mm (47-1/2 in), Cut From : 443078A1
28	86632602	4	WASHER, LOCK, Ext Tooth, M10, 11 x 20 x 2 mm
29	413510A1	1	HOSE, 146 mm (5-3/4 in), Coolant Fill, Cut From : 443079A1
30	507586	2	CLAMP, HOSE, #20, 0.81/1.75 Type F Worm, No. 20
31	406721A1	1	GAUGE, Level Indicator, 1/2", Inc. 32, BSN RVS003572
32	128825	1	O-RING, 8-1, 90 Duro, .644" ID x .087" Thk,
33	86639051	1	CONNECTOR, HYD., 1 7/16"-12 ORFS x M27 x 1.5 ORB, M27 or x 25 fcsl, Inc. 34, 35
34	86639045	1	O-RING, Cl 6, 23.6MM ID x 2.9 Thk, 23.6 ID x 2.9
35	9824050	1	O-RING, -021, 90 Duro, .926" ID x .070" Thk,
36	413537A1	1	BRACKET,
37	9846677	2	BOLT, Hex, M10 x 25, 10.9, Full Thd, Cap, HH, CL 10.9, M10 x 1.5 x 25
38	86632595	1	CLAMP, 1/2", Insul, 1/2" Bolt,
39	9824642	2	BOLT, Hex, M12 x 35, 10.9,
40	86624177	2	WASHER, M12 x 24 x 2.5, 13.5 x 24 x 2.5 mm
41	43260	1	BOLT, Hex, M12 x 30, 10.9,
42	337475	1	NUT, M12, Cl 10,
43	86625255	2	WASHER, M13.5 x 24.5 x 3, HT,
44	86528579	4	NUT, LOCK, M8 x 1.25, Cl 10,
45	43234	1	BOLT, Hex, M8 x 25, 10.9, Cap, HH, CL 10.9, M8 x 1.25 x 25

TJ375 TRACTOR - Engine

02 -01 RADIATOR - HOSES AND TUBES

ссылка	Номер детали	Кол-во	Описание
46	86639004	1	CLAMP, 9/16", Insul, 1/2" Bolt,

TJ375 TRACTOR - Engine

02 -02(1) RADIATOR - MOUNTING AND FAN SHROUD, BSN RSV001392

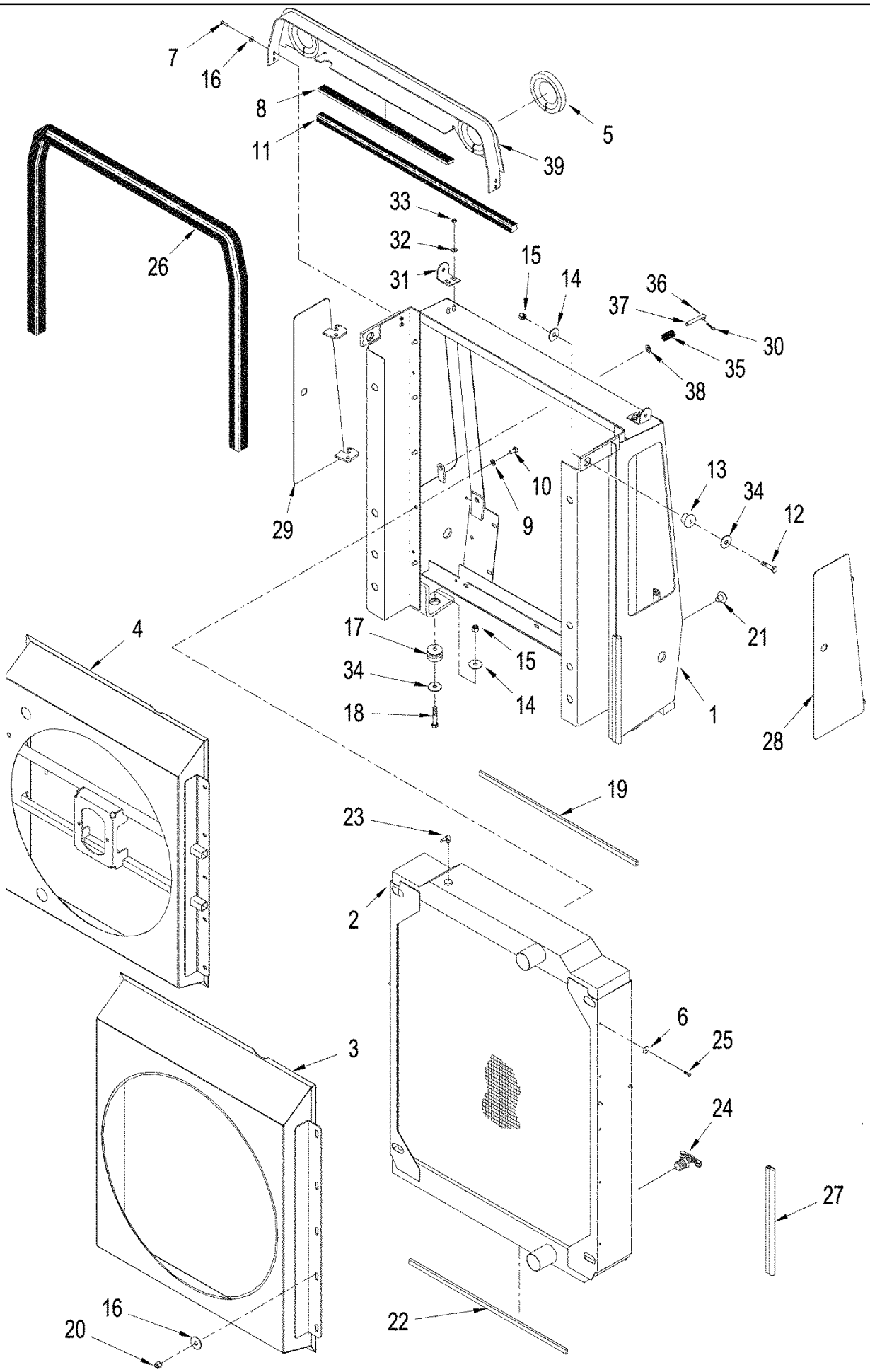

TJ375 TRACTOR - Engine

02 -02(1) RADIATOR - MOUNTING AND FAN SHROUD, BSN RSV001392

ссылка	Номер детали	Кол-во	Описание
1	414481A2	1	FRAME,
2	294025A2	1	RADIATOR,
3	414785A1	1	SHROUD, , TJ375
4	429325A3	1	SHROUD, See Figure : 2-02 [1], TJ425, TJ450
5	328196A1	2	SEAL, 434 mm (17 in), Bulb, Cut From : 443110A1
6	86624183	10	WASHER, M6 x 25 x 1.6,
7	43235	4	BOLT, Hex, M8 x 30, 10.9, Cap, HH, CL 10.9, M8 x 1.25 x 30
8	328197A1	1	SEAL,
9	86624176	10	WASHER, M10 x 20 x 2, M10
10	9861444	13	BOLT, Hex, M10 x 20, 10.9, Full Thd, M10 x 20; 10.9
11	320126A1	1	SEAL,
12	43263	2	BOLT, Hex, M12 x 60, 10.9, M12 x 60; 10.9
13	L13142	2	BUSHING,
14	86637667	2	WASHER, 17/32" x 1 1/2" x 1/8", 13,5 x 44,5 x 3 mm
15	412126	4	NUT, LOCK, M12 x 1.75, Cl 8,
16	86624182	14	WASHER, M6 x 18 x 1.6,
17	435465A1	2	MOUNT, RUBBER,
18	412085	2	BOLT, Hex, M12 x 80, 10.9,
19	320992A1	1	SEAL,
20	86528579	10	NUT, LOCK, M8 x 1.25, Cl 10,
21	86625130	2	PLUG, Dome, 1.250" hole, Nylon, 1-3/4 in
22	434023A1	1	SEAL,
23	86637719	1	FITTING, 90є, 1/4" Hose x 1/8" NPTF, Barbed, 90, 1/4 barb x 1/8 PT
24	86625234	1	COCK, DRAIN, 1/4
25	86505530	10	BOLT, Hex, M6 x 20, 10.9, M6 x 20; 10.9
26	318842A1	1	SEAL, Cut From : L107724
27	320990A1	2	SEAL, Cut From : F43117X
28	380778A4	1	DOOR,
29	380779A4	1	DOOR,
30	435424A1	2	PIN,
31	361250A1	2	BRACKET,
32	86625263	11	WASHER, M8 x 20 x 1.6,
33	43362	7	NUT, M8, Cl 10,
34	86625255	4	WASHER, M13.5 x 24.5 x 3, HT,
35	L129280	2	SPRING,
36	86637813	2	PIN, 1/8" x 1", Coiled, Roll, 1/8 x 1
37	381794A1	2	ROD,
38	86625253	2	WASHER, M11 x 24 x 2, 11 x 24 x 2 mm
39	414619A1	1	SEAL,

TJ375 TRACTOR - Engine

02 -02(2) RADIATOR - MOUNTING AND FAN SHROUD, ASN RSV001392

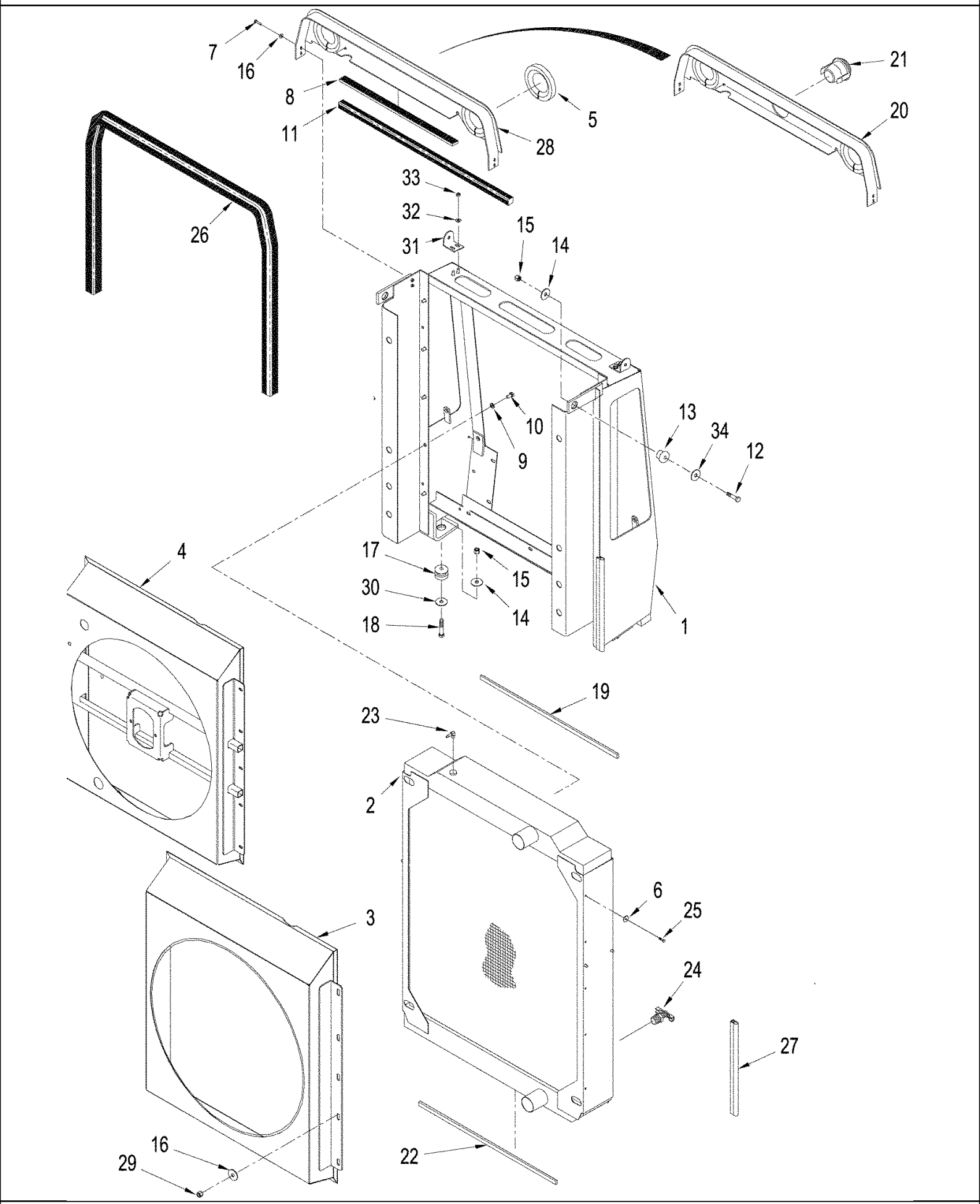

TJ375 TRACTOR - Engine

02 -02(2) RADIATOR - MOUNTING AND FAN SHROUD, ASN RSV001392

ссылка	Номер детали	Кол-во	Описание
1	446410A1	1	FRAME ASSY,
2	294025A2	1	RADIATOR, , TJ450, TJ375, TJ425
2	87416960	1	RADIATOR, , TJ500
3	414785A1	1	SHROUD, , TJ375
4	429325A3	1	SHROUD, See Figure : 02-02 [1], TJ425, TJ500, TJ450
5	328196A1	2	SEAL, 434 mm (17 in), Bulb, Cut From : 443110A1
6	86624183	10	WASHER, M6 x 25 x 1.6,
7	43235	4	BOLT, Hex, M8 x 30, 10.9, Cap, HH, CL 10.9, M8 x 1.25 x 30
8	328197A1	1	SEAL,
9	86625253	10	WASHER, M11 x 24 x 2, M10
10	9861444	13	BOLT, Hex, M10 x 20, 10.9, Full Thd, M10 x 24; 10.9
11	320126A1	1	SEAL,
12	43263	2	BOLT, Hex, M12 x 60, 10.9, M12 x 60; 10.9
13	L13142	2	BUSHING,
14	86637667	2	WASHER, 17/32" x 1 1/2" x 1/8", 13,5 x 44,5 x 3 mm
15	412126	4	NUT, LOCK, M12 x 1.75, Cl 8,
16	86624182	14	WASHER, M6 x 18 x 1.6,
17	435465A1	2	MOUNT, RUBBER,
18	412085	2	BOLT, Hex, M12 x 80, 10.9,
19	320992A1	1	SEAL,
20	87420942	1	PLUG, , Used with High Output Alternator Applications, ASN RVS001875
21	87416422	1	SEAL, , ASN RVS001875
22	434023A1	1	SEAL,
23	86637719	1	FITTING, 90є, 1/4" Hose x 1/8" NPTF, Barbed, 90, 1/4 barb x 1/8 PT
24	86625234	1	COCK, DRAIN, 1/4
25	86505530	10	BOLT, Hex, M6 x 20, 10.9, M6 x 20; 10.9
26	318842A1	1	SEAL, Cut From : L107724
27	320990A1	2	SEAL, Cut From : F43117X
28	414619A1	1	SEAL, , BSN RVS001875
29	86528579	10	NUT, LOCK, M8 x 1.25, Cl 10,
30	86625255	4	WASHER, M13.5 x 24.5 x 3, HT,
31	361250A1	2	BRACKET,
32	86625263	11	WASHER, M8 x 20 x 1.6,
33	43362	7	NUT, M8, Cl 10,

TJ375 TRACTOR - Engine

02 -05 ETHER START SYSTEM

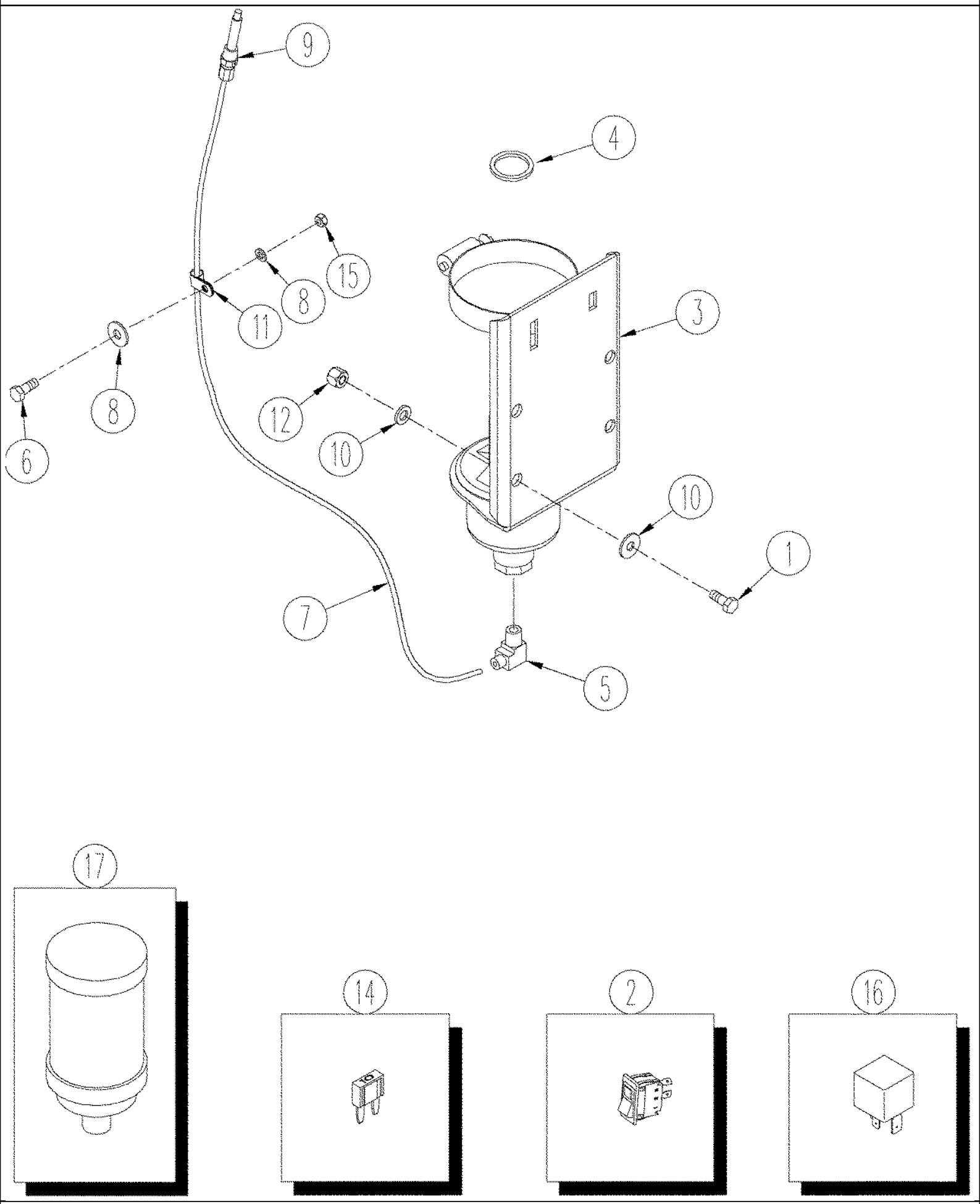

TJ375 TRACTOR - Engine

02 -05 ETHER START SYSTEM

ссылка	Номер детали	Кол-во	Описание
1	86505530	4	BOLT, Hex, M6 x 20, 10.9, M6 x 20; 10.9
2	229364A1	1	SWITCH, Rocker, Ether Start
	392355A1	1	SOLENOID, Control, Electrical, Inc. 3 - 5
3	NSS	1	NOT SERVICED SEPARATELY, Valve, Control
4	392377A1	1	GASKET, Mounting
5	48565	1	ELBOW, 90є, 5/16"-24 x 1/8" NPT, Comp, 90, 1/8 tube OD x 1/8 PT
6	9846677	1	BOLT, Hex, M10 x 25, 10.9, Full Thd, Cap, HH, CL 10.9, M10 x 1.5 x 25
7	428197A1	1	HOSE,
8	86624176	1	WASHER, M10 x 20 x 2, M10
9	339866A2	1	NOZZLE INJECTION, Atomizer
10	86624181	8	WASHER, M6, 6.6 x 12 x 1.6 mm
11	D43839	2	CLAMP, 3,2 mm
12	86500688	4	NUT, M6, Cl 10,
13	853765	1	CLAMP, 5/16", Insul, 3/8" Bolt, Ether Start Harness, Not Illustrated
14	121412A1	1	FUSE, 10 amp
15	86500689	1	NUT, M10, Cl 10, M10; 10
16	87414866	1	RELAY,
17	310992A1	1	CYLINDER, Starting Fluid
	438262A1	1	KIT, Ether Start, Inc. 1, 3 - 13, See Figure: 4-22

02 -06 AIR INDUCTION SYSTEM

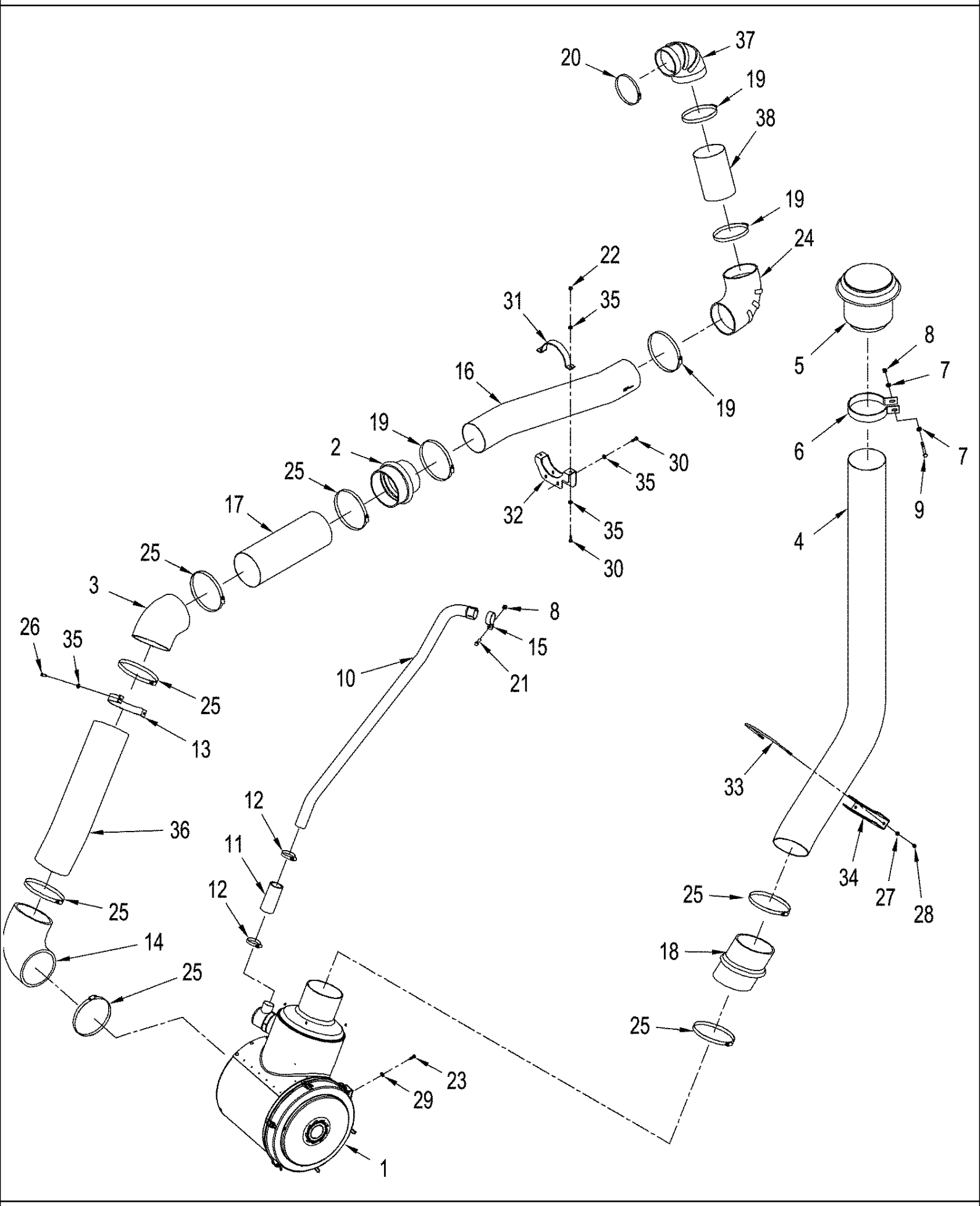

TJ375 TRACTOR - Engine

02 -06 AIR INDUCTION SYSTEM

ссылка	Номер детали	Кол-во	Описание
1	418701A2	1	AIR CLEANER, See Figure: 02-08
1	87417039	1	FILTER, AIR, Air Cleaner, See Figure: 02-08, TJ500
2	419137A1	1	ADAPTER,
3	419123A1	1	ELBOW, 45
4	418707A1	1	TUBE, Intake
5	358127A1	1	CAP, , BSN RVS002701
5	87412343	1	PRESCREENER ASSY., Cap, Inc. 6, ASN RVS002701
6	357942A2	2	CLAMP,
6	324466A1	1	CLAMP, , TJ500
7	86624176	8	WASHER, M10 x 20 x 2,
8	86514720	7	NUT, LOCK, M10 x 1.5
9	43253	2	BOLT, Hex, M10 x 100, 10.9,
10	419267A2	1	TUBE, Aspirator, BSN RVS002701
10	87430646	1	TUBE, Aspirator, ASN RVS002701
11	313949A3	1	HOSE, 135 mm (5 in), Aspirator, Cut From : 443069A1
12	86624194	2	CLAMP, HOSE, #36, 1.81/2.75 Type F Worm, 1-13/16 - 2-3/4
13	430515A1	1	BRACKET,
14	419280A1	1	ELBOW, 90, Rubber, BSN RVS002885
14	87418234	1	ELBOW, 90, Rubber, 7 in, ASN RVS002885
15	434180A1	1	NO DESCRIPTION, Clamp
16	400876A1	1	TUBE, Air Intake
17	418702A1	1	TUBE,
18	443075A1	1	HOSE,
18	87417332	1	HOSE, LARGE,
19	86633350	4	CLAMP, HOSE, 6.25/7.125 HD Worm, W/liner,
20	86637712	1	CLAMP, HOSE, 5.25/6.125 HD Worm, W/liner,
21	86624978	1	BOLT, Hex, M10 x 35, 10.9, Full Thd,
22	86528579	2	NUT, LOCK, M8 x 1.25, Cl 10,
23	9846677	4	BOLT, Hex, M10 x 25, 10.9, Full Thd, Cap, HH, CL 10.9, M10 x 1.5 x 25
24	434176A1	1	ELBOW, 90, Rubber
25	86637710	7	CLAMP, HOSE, 7.25/8.125 HD Worm, W/liner,
26	86625008	2	BOLT, Hex, Lock, M8 x 25, Cl 10.9, M8 x 25; 10.9
27	87362	4	WASHER, 5/16" SAE,
28	86050277	4	NUT, LOCK, 5/16"-18, GB, Lock, G8, 5/16"-18
29	86625253	4	WASHER, M11 x 24 x 2, 11 x 24 x 2,0
30	43234	4	BOLT, Hex, M8 x 25, 10.9, Cap, HH, CL 10.9, M8 x 1.25 x 25
31	385744A1	1	BRACKET,
32	385746A1	1	BRACKET,
33	385747A1	2	U-BOLT,
34	385748A1	1	BRACKET,
35	86625263	8	WASHER, M8 x 20 x 1.6,
36	418696A1	1	TUBE, 178 mm (7 in), Air Cleaner Intake
38	400875A1	1	TUBE, Intake, TJ500
37	434179A1	1	ELBOW, 90, Reducing, BSN RVS002885
37	87418236	1	ELBOW, 90, Reducing, ASN RVS002885

02 -07 AIR COOLER

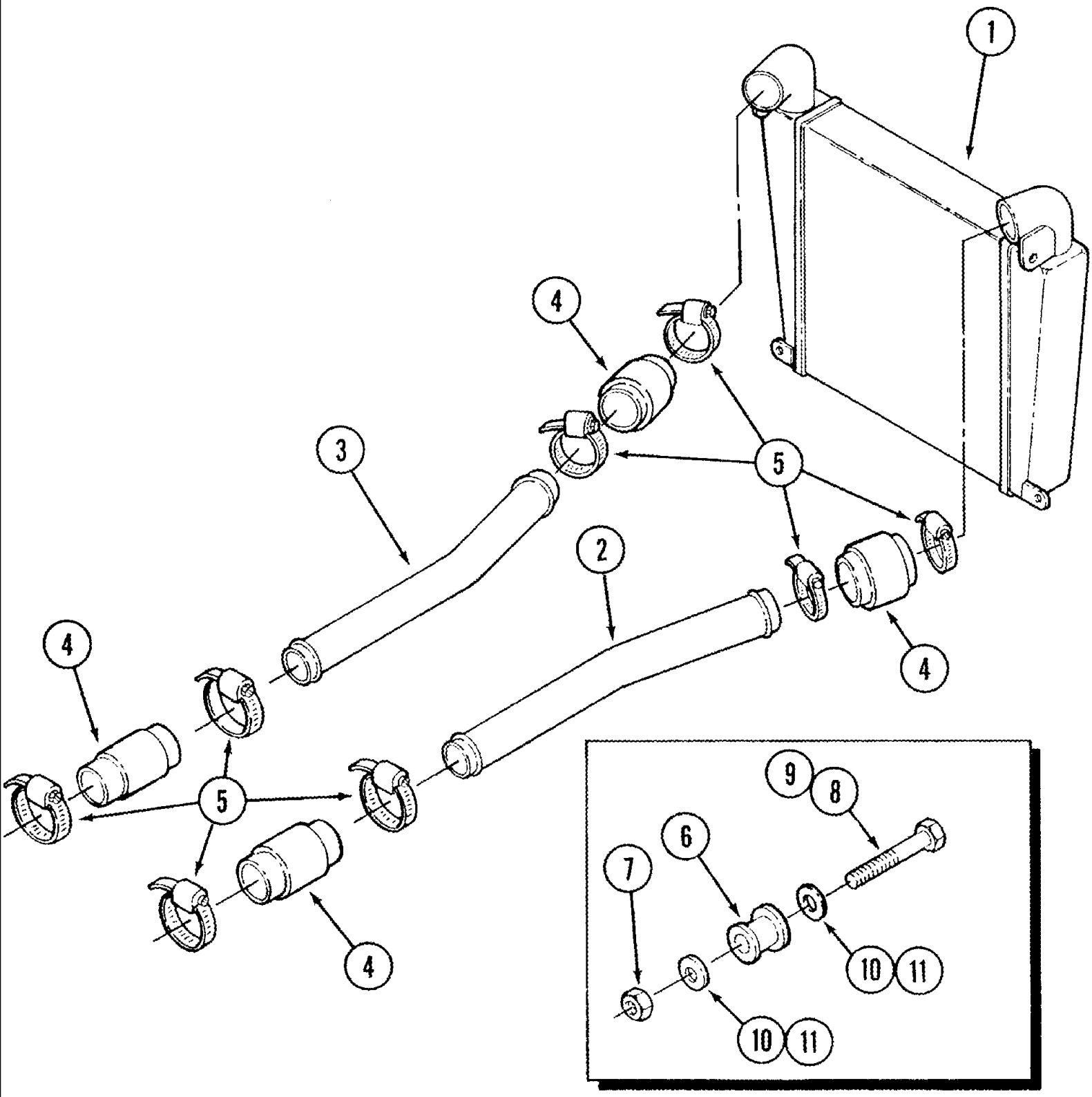

TJ375 TRACTOR - Engine

02 -07 AIR COOLER

ссылка	Номер детали	Кол-во	Описание
1	437398A1	1	COOLER,
2	400823A1	1	TUBE,
3	324349A2	1	TUBE,
4	251400A1	4	BELLOWS, Rubber
5	L124635	8	CLAMP, HOSE,
6	434177A1	4	MOUNT, RUBBER,
7	86514720	4	NUT, LOCK, M10 x 1.5
8	43248	2	BOLT, Hex, M10 x 40, 10.9, Full Thd, Upper Cooler Mount
9	86556139	2	BOLT, Hex, M10 x 110, 10.9, M10 x 110; 10.9, Lower Cooler Mount
10	86624186	4	WASHER, 13/32" x 1 1/8" x .134", 13/32 x 1-1/8 x 9/64
11	86624176	4	WASHER, M10 x 20 x 2, M10

02 -08 AIR CLEANER ASSY

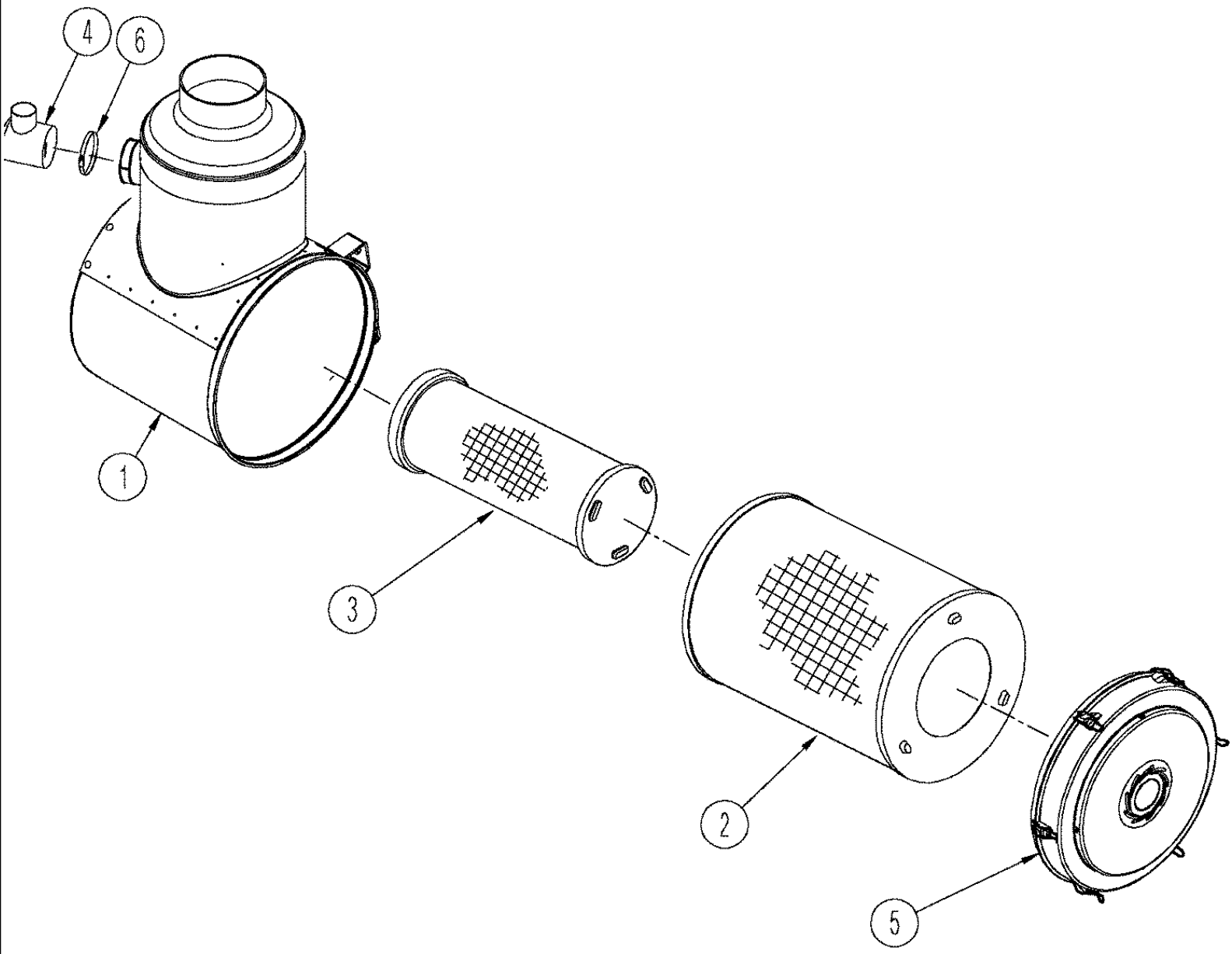

TJ375 TRACTOR - Engine

02 -08 AIR CLEANER ASSY

ссылка	Номер детали	Кол-во	Описание
	418701A2	1	AIR CLEANER, Inc. 1 - 6
	87417039	1	FILTER, AIR, Inc. 1 - 6, TJ500
1	NSS	1	NOT SERVICED SEPARATELY, Housing
2	87408712	1	FILTER, AIR, Primary
2	87417042	1	FILTER, ELEMENT, Primary, TJ500
3	87408713	1	FILTER, AIR, Safety
3	87417043	1	FILTER, ELEMENT, Safety, TJ500
4	436005A1	1	VALVE, Check
5	87305334	1	COVER, Cap, End
6	86625033	1	CLAMP, HOSE, #56, 3.06/4.00 Type F Worm,

02 -09 ENGINE - BLOCK HEATER

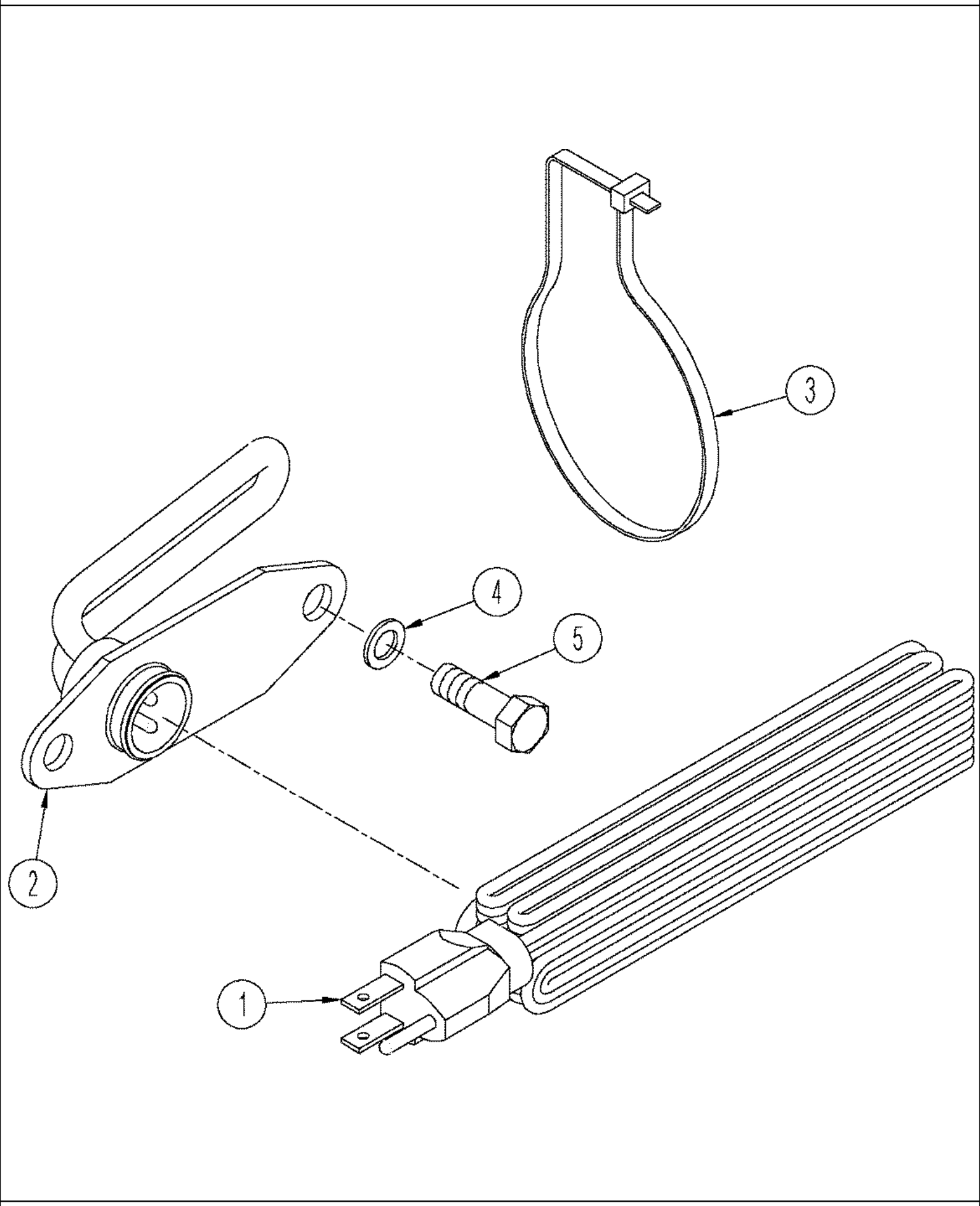

TJ375 TRACTOR - Engine

02 -09 ENGINE - BLOCK HEATER

ссылка	Номер детали	Кол-во	Описание
1	196466A1	1	CABLE, ELECTRIC, 1829 mm (72 in)
2	338862A1	1	HEATER, , Purchase gasket direct from Cummins P/N 3688557
3	435421A1	1	STRAP, SECURING, Ty-rap
4	86625251	2	WASHER, M10 x 18 x 1.6, 11 x 18 x 1.6 mm
5	9861444	2	BOLT, Hex, M10 x 20, 10.9, Full Thd, M10 x 20 ; 10.9
	365977A1	1	KIT, Block Heater, Inc. 1 - 5

02 -10 ENGINE - MOUNTING AND ATTACHING PARTS

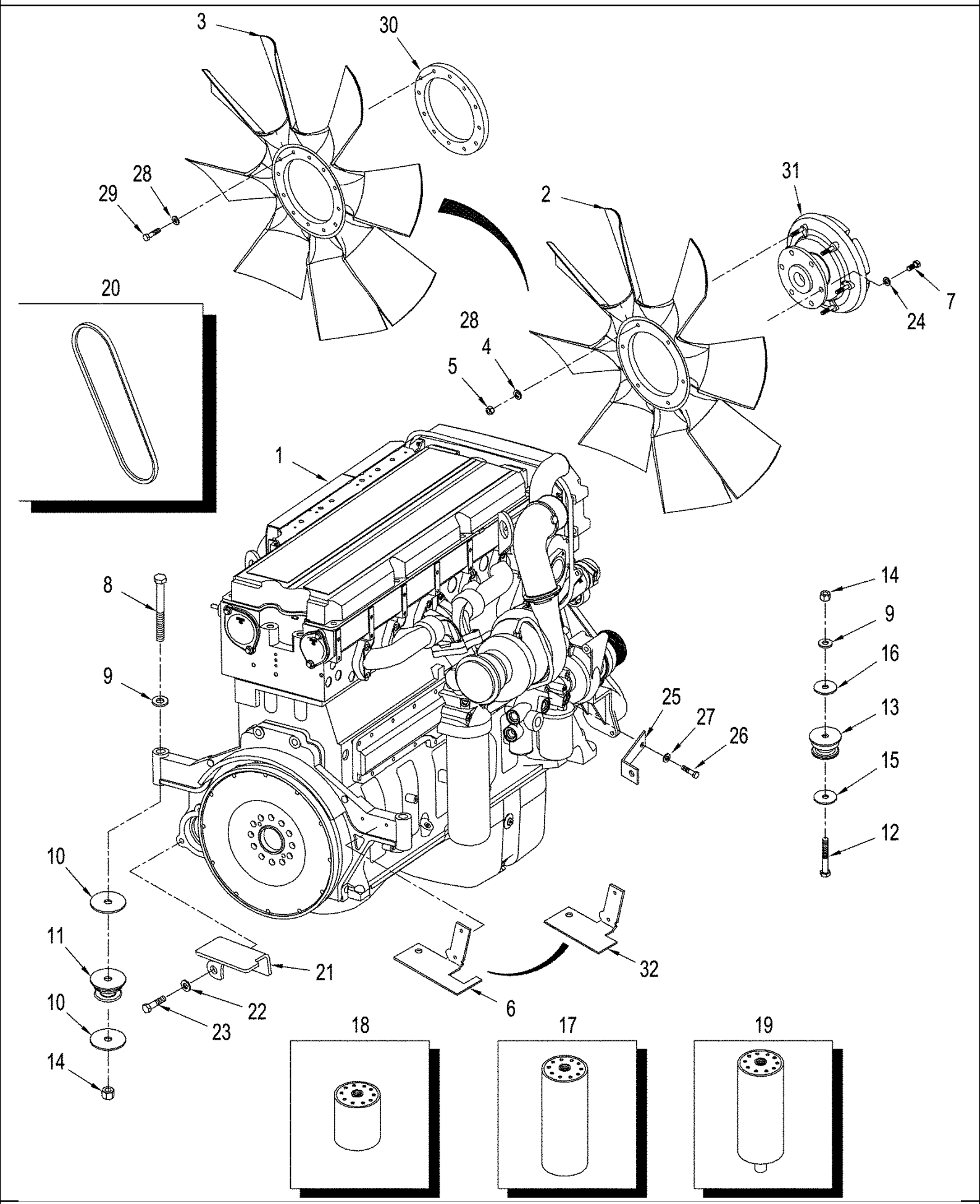

Also Order Bolt 120108 (12), Washer 86632601 (6), Washer 87024879 (12), and Nut 412250 (6).

TJ375 TRACTOR - Engine

02 -10 ENGINE - MOUNTING AND ATTACHING PARTS

ссылка	Номер детали	Кол-во	Описание
1	NSS	1	NOT SERVICED SEPARATELY, , Engine, Note: Order From Your Cummins Engine Dealer
2	414782A2	1	FAN, 32 in, When Ordering Supply (1) 87440096 Fan, (1) 87419100 Mounting Plate, (6) 43234 Bolt, (12) 87024879 Washer, & (6) 412250 Lock Nut., TJ375, BSN RVS002786
2	414577A1	1	FAN, 32 in, See Figure : 02-03, TJ425, TJ450
3	87440096	1	FAN, 32 in, TJ375, ASN RVS002786
4	86625263	6	WASHER, M8 x 20 x 1.6,
5	86528579	6	NUT, LOCK, M8 x 1.25, Cl 10, , TJ425, TJ450
5	412250	6	NUT, LOCK, M8 x 1.25, Cl 8, , TJ375
6	411019A3	1	BRACKET, Flywheel, BSN RVS003008
7	120108	6	BOLT, Hex, M8 x 80, 8.8, Full Thd,
7	43260	6	BOLT, Hex, M12 x 30, 10.9, , TJ375
8	86639152	2	BOLT, Hex, M16 x 200, 10.9, M16 x 200; 10.9
9	86624156	2	WASHER, 21/32" x 1 1/2" x .188", HDN, 21/32 x 1-1/2 x 3/16
10	76085089	4	WASHER,
11	382235A1	2	MOUNT, RUBBER,
12	86624983	2	BOLT, Hex, M16 x 110, 10.9,
13	435439A1	2	MOUNT, RUBBER,
14	412066	2	NUT, LOCK, M16 x 2, Cl 8, M16 x 2
15	86637662	2	WASHER, 21/32 x 2-1/2 x 7/32
16	435471A1	2	WASHER, 21/32 x 3-1/2 x 3/16
17	441700A1	1	FILTER, Engine Oil, Cummins
18	441702A1	1	FILTER, COOLANT,
19	441701A1	1	FILTER, FUEL,
20	325289A1	1	BELT, Water Pump
20	87437226	1	BELT, Accessory Drive, Alternator & A/C
21	411301A2	1	SHIELD, Heat
22	86729275	2	WASHER, LOCK, 5/8",
23	281041	2	BOLT, Hex, 5/8"-11 x 7 1/2", G8, Cap, HH, G8, 5/8"-11 x 7-1/2"
24	86632601	6	WASHER, LOCK, Ext Tooth, M8, Lock
24	86625255	6	WASHER, M13.5 x 24.5 x 3, HT, , TJ375
25	87422995	1	BRACKET, Engine Harness, ASN RVS002701
26	398792	2	BOLT, Hex, M12 x 25, 10.9, M12 x 25, 10.9
27	412123	2	WASHER, LOCK, M12,
28	87024879	12	WASHER, .344 x 1.0 x .098, TJ375
29	43234	6	BOLT, Hex, M8 x 25, 10.9, Cap, HH, M8 x 25, CL10.9
30	87419100	1	PLATE, MOUNTING, , ASN RVS002786
31	430406A1	1	DRIVE, , TJ375
32	87305067	1	BRACKET, SUPPORTING, , ASN RVS003008

Also Order Bolt 120108 (12), Washer 86632601 (6), Washer 87024879 (12), and Nut 412250 (6).

03 -01 THROTTLE - DECELARATOR CONTROL

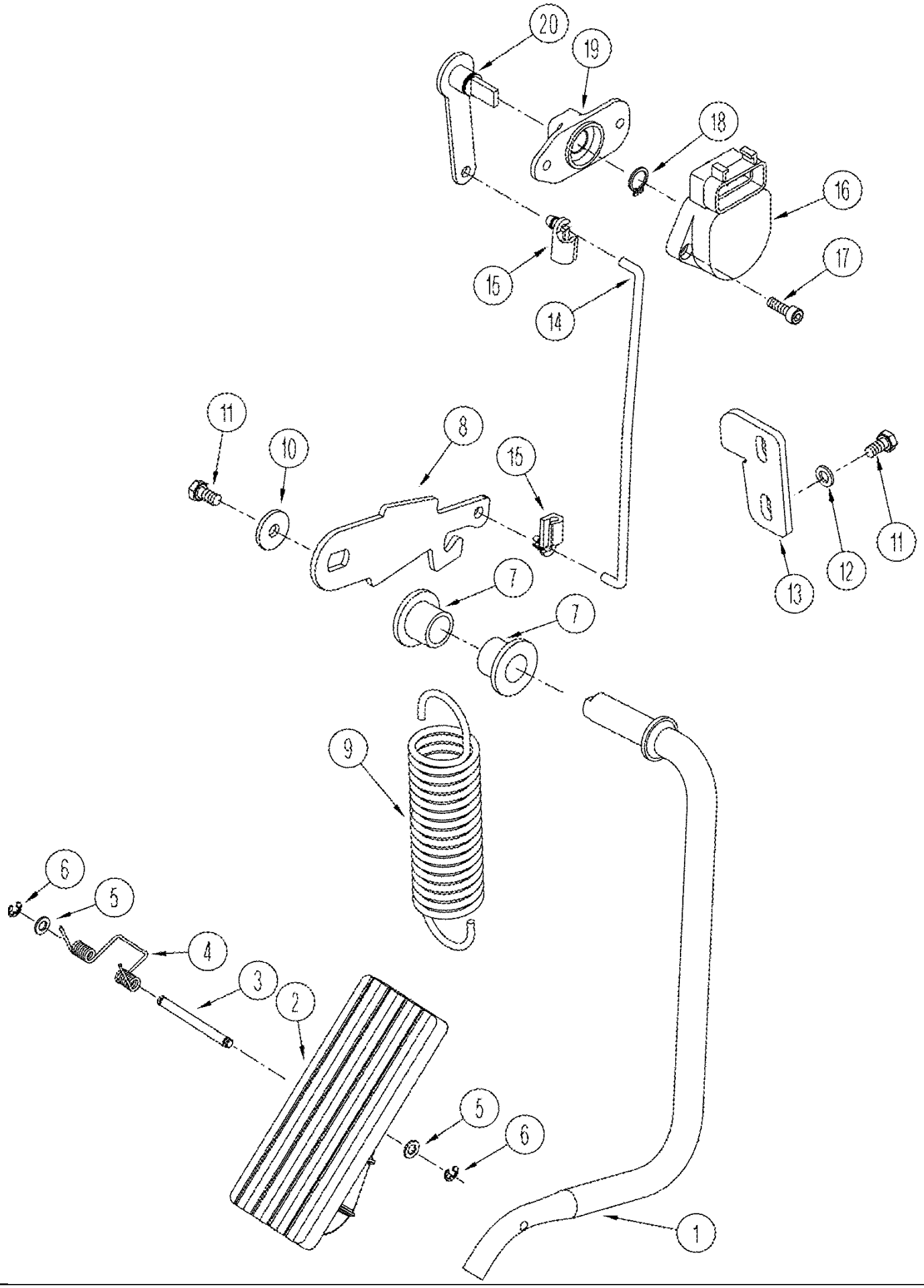

TJ375 TRACTOR - Fuel System

03 -01 THROTTLE - DECELARATOR CONTROL

ссылка	Номер детали	Кол-во	Описание
1	328353A2	1	ROD,
2	298842A1	1	SKID/SHOE,
3	255291A1	1	PIN,
4	256776A1	1	SPRING,
5	86625261	2	WASHER, M5 x 10 x 1, 5.5 x 10 x 1 mm
6	86632599	2	CIRCLIP, M5, E
7	300891A1	2	BEARING, Support
8	248844A1	1	LEVER,
9	278211A1	1	SPRING,
10	86624183	2	WASHER, M6 x 25 x 1.6,
11	86508616	3	BOLT, Hex, M6 x 12, 10.9, Cap, HH, CL 10.9, M6 x 1 x 12
12	86624181	2	WASHER, M6, 6,6 x 12 x 1.6 mm
13	281115A1	1	BRACKET,
14	281125A1	1	ROD,
15	435473A1	2	RETAINER,
16	259012A1	1	POTENTIOMETER,
17	86639296	2	SCREW, M5 x 16; 8.8
18	300624	1	RING, SNAP, M12, Ext, Ext, M12
19	258524A2	1	BUSHING,
20	313273A2	1	PIN,

TJ375 TRACTOR - Fuel System

03 -03 EXHAUST SYSTEM

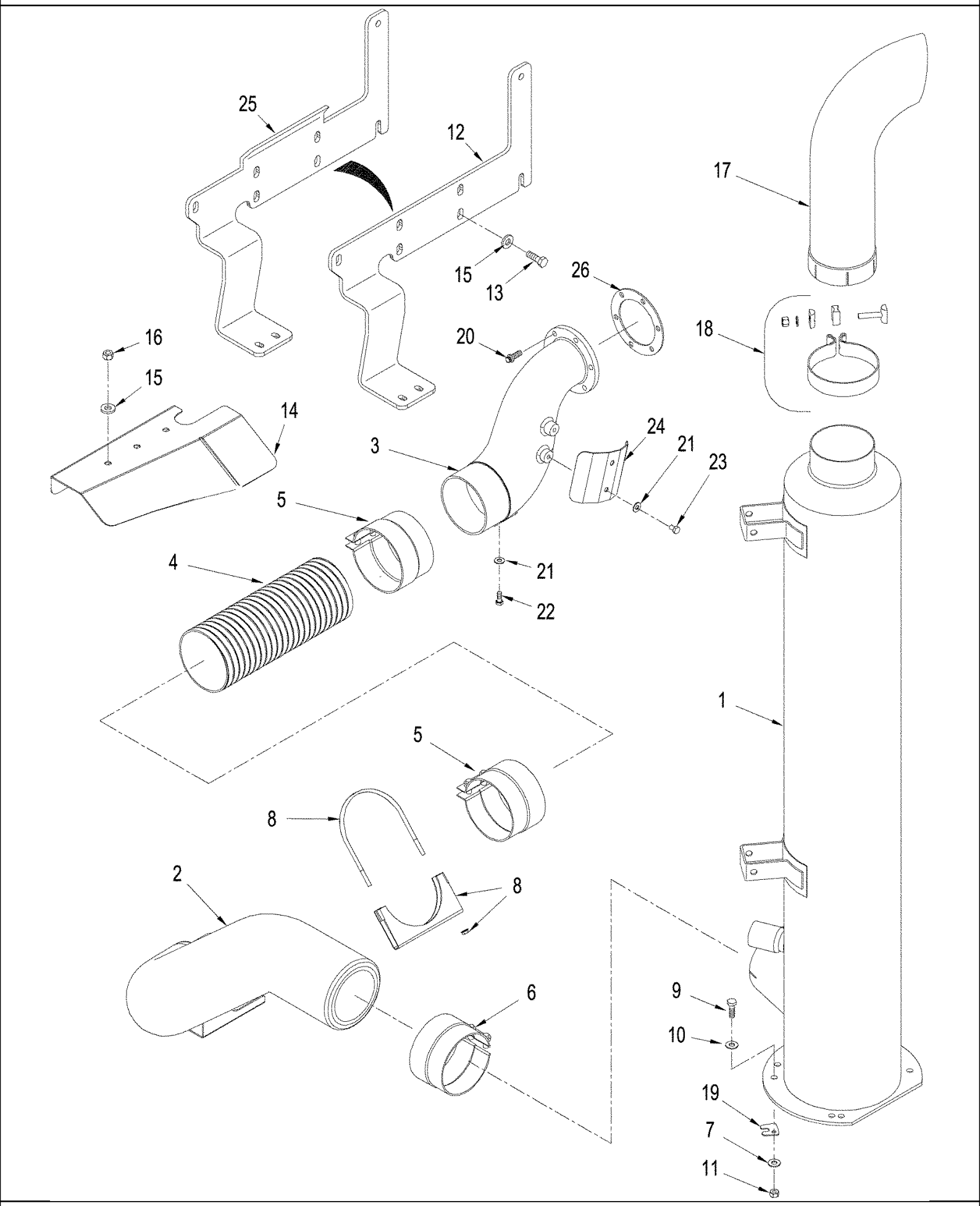

TJ375 TRACTOR - Fuel System

03 -03 EXHAUST SYSTEM

ссылка	Номер детали	Кол-во	Описание
1	400787A2	1	MUFFLER, , BSN RVS002701
1	87430156	1	MUFFLER, , TJ375, TJ425, ASN RVS002701
1	87430158	1	MUFFLER, , TJ450, TJ500, ASN RVS002701
1	403438A1	1	MUFFLER, Spark Arresting, BSN RVS002701
1	87430157	1	MUFFLER, Spark Arresting, TJ425, TJ375, ASN RVS002701
1	87430159	1	MUFFLER, Spark Arresting, TJ500, TJ450, ASN RVS002701
2	426305A2	1	TUBE, Double Wall
3	400908A2	1	ELBOW,
4	413677A1	1	TUBE, Flexible
5	413678A1	2	CLAMP,
6	357686A1	1	CLAMP, 6
7	86639325	4	WASHER, M10 x 24.5 x 3, HT,
8	336658A1	1	U-BOLT, U
9	43248	4	BOLT, Hex, M10 x 40, 10.9, Full Thd,
10	86625252	6	WASHER, M10 x 21.5 x 2.5, HT, 11 x 21 x 2.5 mm
11	100037	4	NUT, M10 x 1.5, Cl 8,
12	87417550	1	BRACKET, SUPPORTING, , BSN RVS002701
13	9824642	6	BOLT, Hex, M12 x 35, 10.9,
14	401200A3	1	SHIELD, Heat
15	86625256	9	WASHER, M12 x 28.5 x 4, HT,
16	337475	3	NUT, M12, Cl 10,
17	357876A2	1	ELBOW, Exhaust, Inc. 18, BSN RVS002701
17	87430632	1	ELBOW, Exhaust, Inc. 18, ASN RVS002701
18	357875A1	1	CLAMP,
19	404824A1	1	SHIM, Muffler
20	86639302	6	SCREW, 12 Pt Hd, M10 x 25, 12.9, M10 x 25; 12.9
21	86625263	4	WASHER, M8 x 20 x 1.6,
22	43233	2	BOLT, Hex, M8 x 20, 10.9, Cap, HH, CL 10.9, M8 x 1.25 x 20
23	43231	2	BOLT, Hex, M8 x 12, 10.9, Full Thd, M8 x 12; 10.9
24	401096A1	1	SHIELD, Heat
25	87417550	1	BRACKET, SUPPORTING, , ASN RVS002701
26	NSS	1	NOT SERVICED SEPARATELY, Gasket, Order From Your Cummins Engine Dealer

TJ375 TRACTOR - Fuel System

03 -04 FUEL LINES

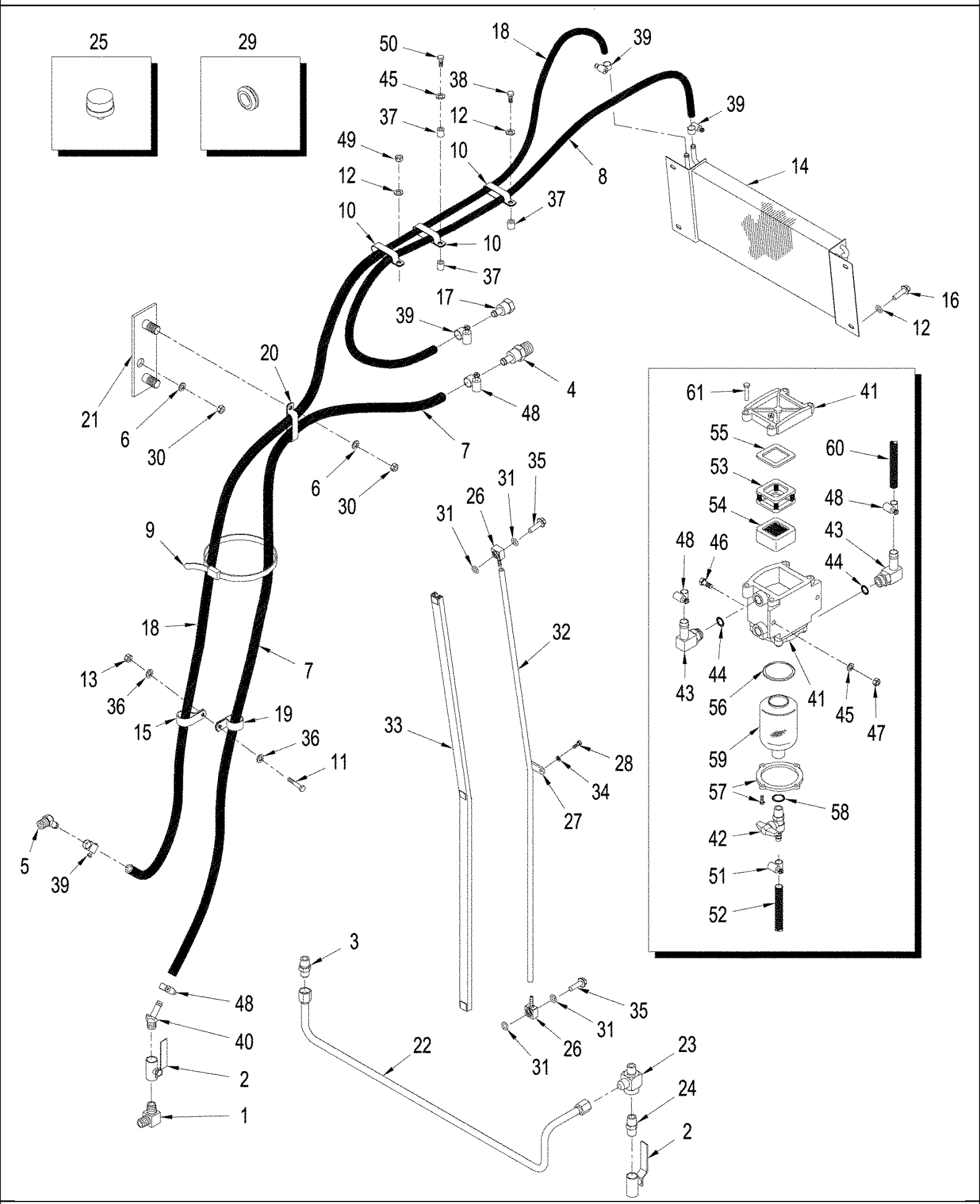

TJ375 TRACTOR - Fuel System

03 -04 FUEL LINES

ссылка	Номер детали	Кол-во	Описание
1	86637715	1	ELBOW, 90є, 1/2"-14 Male, 90, 1/2 PT
2	435446A1	2	VALVE, SHUT-OFF,
3	242680	1	CONNECTOR, HYD., 7/8"-14, 37є x 1/2"-14, NPTF,
4	435459A1	1	FITTING, 7/8 fem sw x 31/64 barb, Socketless
5	86637718	1	FITTING, 45є, 1/2" Hose x 1/2" NPTF Beaded, 45, 1/2 x 1/2 barb
6	86624176	7	WASHER, M10 x 20 x 2, M10
7	296077A1	1	HOSE, 3657mm (144 in), Supply, Cut From : 443096A1
8	372913A1	1	HOSE, 2387 mm (94 in), Hot Return, Cut From : 443086A1
9	327144A1	1	CLAMP,
10	L101181	4	CLAMP,
11	86639039	3	BOLT, M8 x 35; 10.9
12	86624184	7	WASHER, M8 x 16 x 1.6, 9 x 17 x 1.6 mm
13	86528579	3	NUT, LOCK, M8 x 1.25, Cl 10,
14	87332463	1	COOLER, Fuel
15	86594406	3	CLAMP, 5/8", Insul, 3/8" Bolt, 5/8 ID
16	43233	4	BOLT, Hex, M8 x 20, 10.9, Cap, HH, CL 10.9, M8 x 1.25 x 20
17	435462A1	1	FITTING, 7/8
18	310715A1	1	HOSE, 5600 mm (221 in), Cold Return, Cut From : 443086A1
19	86624005	3	CLAMP, 3/4", Insul, 3/8" Bolt, 3/4 ID
20	R54363	4	CLAMP,
21	324089A1	2	PLATE ASSY.,
22	335041A2	1	LINE, Crossover
23	86637792	1	TEE, 1/2 PT x 1/2 PT x 7/8 fl
24	86637713	1	CONNECTOR, HYD., 1/2"-14 NPTF, 1/2 PT x 1-7/8
25	435545A1	1	BREATHER,
26	352767A1	2	CONNECTOR, HYD.,
27	402800A1	1	BRACKET,
28	86639037	1	BOLT, Hex, M6 x 16, 10.9, M6 x 16; 10.9
29	86637779	2	GROMMET, 3/4" ID x 1 1/16" Groove Dia, 3/4
30	86500689	6	NUT, M10, Cl 10, M10; 10.9
31	337248A1	4	O-RING,
32	337240A1	1	HOSE, 1222 mm (48 in), Sight Guage, Cut From : 337242A1
33	349868A1	1	CHANNEL, Sight Guage
34	86624181	1	WASHER, M6, 6,6 x 12 x 1.6 mm
35	86511845	2	BOLT, Hex Flg, M10 x 35, 8.8, Cap, Flg Hd, CL 8.8, M10 x 1.5 x 35
36	86625263	6	WASHER, M8 x 20 x 1.6,
37	A27328	3	SPACER,
38	86625005	2	BOLT, Hex, M8 x 60, 10.9,
39	86625020	4	CLAMP, HOSE, #06, .44/.78 Type F Worm, 7/16 - 25/32
40	86637716	1	FITTING, 45є, 5/8" Hose x 1/2" NPTF Beaded, 45, 5/8
	87408709	1	FILTER, Fuel Strainer Assy., Inc. 41, 42, 53 - 59
41	NSS	1	NOT SERVICED SEPARATELY, Housing, Auxiliary Filter
42	369844A1	1	DRAINCOCK/TAP, SUPPLY, Valve
43	86637720	2	FITTING, 90є, 5/8" Hose x 7/8"-14 ORB Beaded, 90, 5/8 barb x 7/8 or, Inc. 44
44	167269	2	O-RING, 10-1, 90 Duro, .755" ID x .097" Thk,

03 -04 FUEL LINES

ссылка	Номер детали	Кол-во	Описание
45	86624184	4	WASHER, M8 x 16 x 1.6, 9 x 17 x 1.6 mm
46	120104	2	BOLT, Hex, M8 x 20, 8.8,
47	43362	2	NUT, M8, Cl 10,
48	82012722	4	CLAMP, HOSE, 1/2 - 29/32 dia
49	86514720	1	NUT, LOCK, M10 x 1.5
50	86516395	1	BOLT, Hex, M8 x 90, 10.9, M8 x 90
51	244358	1	CLAMP, HOSE, #06, .44/.78 Type F Worm,
52	87414236	1	HOSE,
53	87333679	1	SPRING, Fuel Frame
54	87408710	1	FILTER, 30 Micron
55	87333676	1	GASKET, Fuel Strainer
56	87331930	1	GASKET,
57	87333671	1	RING, Retainer
58	369843A1	1	GASKET,
59	87408711	1	FILTER, Bowl, Fuel Filter, clear
60	87313728	1	HOSE, 485 mm (19")
61	87608457	4	BOLT, SPECIAL,

TJ375 TRACTOR - Fuel System

03 -05 THROTTLE

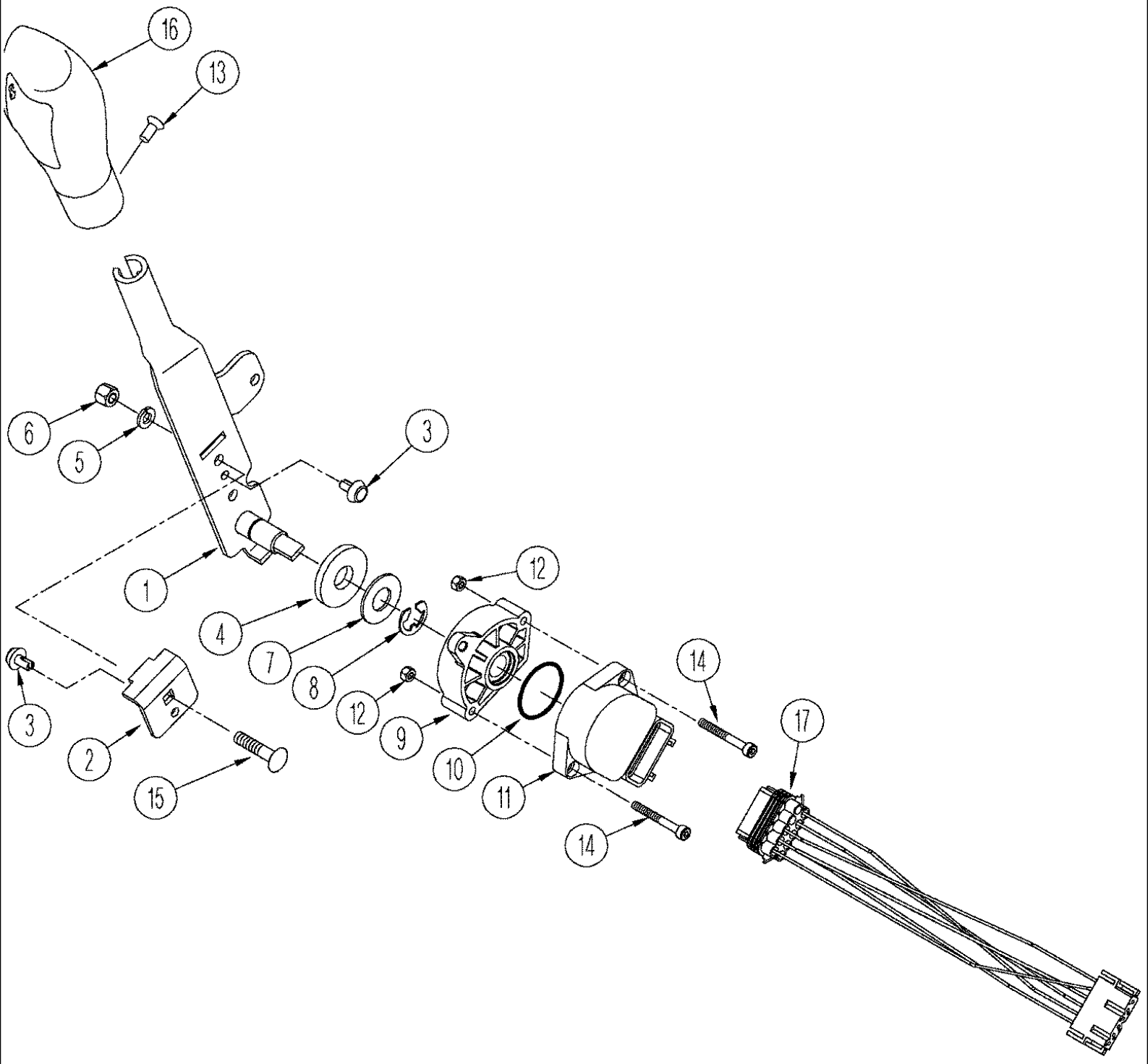

TJ375 TRACTOR - Fuel System

03 -05 THROTTLE

ссылка	Номер детали	Кол-во	Описание
1	414193A2	1	BRACKET, Throttle, With Power Shift Transmission, With Manual Shift Transmission with ARU
1	410029A2	1	BRACKET, Throttle, With Manual Shift Transmission without ARU
2	258734A2	1	SUPPORT,
3	259040A1	2	PAD, WEAR,
4	237486A1	1	WASHER,
5	86517328	1	WASHER, LOCK, M6,
6	393392	1	NUT, LOCK, M6 x 1, Cl 8, CL 10, M6 x 1.0
7	88538	1	WASHER, LOCK, Ext-Int Tooth, 1/4", 17/32 x 1-1/8 x 1/16
9	239491A1	1	BUSHING,
10	9824051	1	O-RING, -025, 90 Duro, 1.176" ID x .070" Thk,
11	259012A1	1	POTENTIOMETER, , With Power Shift Transmission, With Manual Shift Transmission with ARU
11	402751A1	1	POTENTIOMETER, , With Manual Shift Transmission without ARU
12	385681	2	NUT, LOCK, M4 x .7, Cl 8, Prevailing Torque, CL 8, M4 x .7
13	86639303	1	SCREW, Hex Soc Flat Hd, M5 x 12, 10.9, Socket, M5 x 12
14	86639295	2	SCREW, Socket, M4 x 35; 8.8
15	86512441	1	BOLT, CARRIAGE, Short NK, M6 x 30, Cl8.8, Full Thd,
16	413805A1	1	HANDLE, Throttle, See Figure : 06-02, With Manual Shift Transmission with ARU
16	413804A2	1	HANDLE, Throttle, See Figure, 06-02, With Power Shift Transmission
16	431530A1	1	HANDLE, Throttle, See Figure(s) : 06-02, With Manual Shift Transmission without ARU
17	276352A1	1	HARNESS, Throttle, With Power Shift Transmission, With Manual Shift Transmission with ARU
8	9635806	1	CIRCLIP, #50, .392" Dia, E-Type,

04 -01 CONTROLS - RIGHT HAND CONSOLE, BSN RVS003801

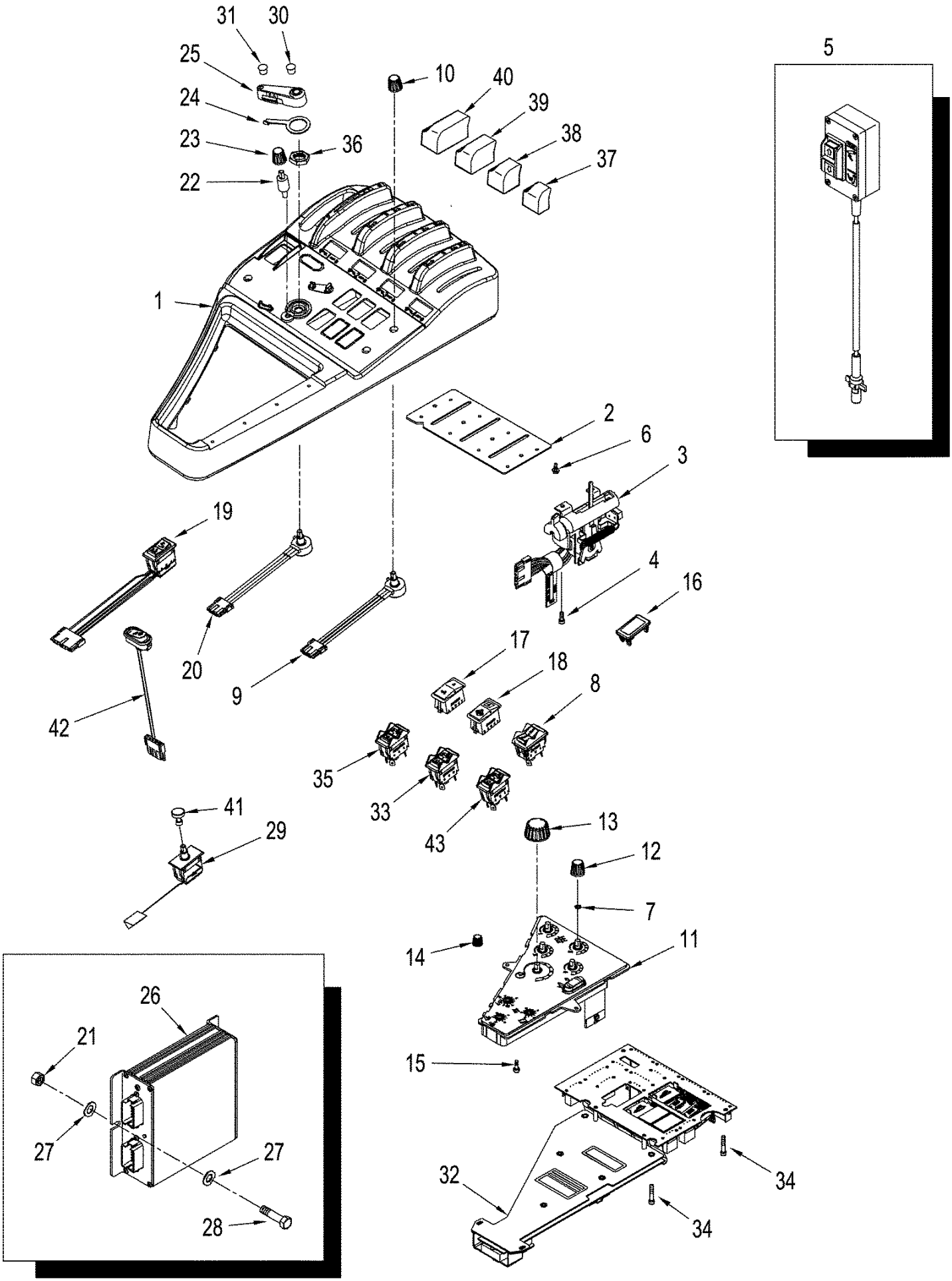

TJ375 TRACTOR - Electrical System

04 -01 CONTROLS - RIGHT HAND CONSOLE, BSN RVS003801

ссылка	Номер детали	Кол-во	Описание
1	417916A1	1	COVER ASSY, Armrest Console, Right Hand, See Figure : 09-22
	409638A1	1	CONTROL, Electronic, Inc. 2 - 4
2	230098A1	1	PLATE, Mounting
3	406961A1	4	LEVER ASSY., Remote Auxiliary Valve
4	86637785	8	SCREW, Sltd Pan Hd, #8-32 x 3/8",
5	382247A1	1	SWITCH, Remote, Three Point Hitch
6	86639294	4	SCREW, Hex Soc Hd, M4 x 20, 8.8, Socket, M4 x 20
7	A39888	1	NUT,
8	277499A1	1	SWITCH, Fifth Auxiliary Valve
9	256305A2	1	POTENTIOMETER, Flow Control
10	276797A1	1	KNOB, Flow Control
11	339735A1	1	PANEL, Secondary, With Three Point Hitch
11	238290A4	1	PANEL, Secondary, Without Three Point Hitch
12	276797A1	4	KNOB, Flow Control
13	187820A1	1	BUTTON, Remote Valve Timer Control
14	223433A1	2	KNOB, Electronic Draft Control, With Three Point Hitch
15	86639117	2	SCREW, SELF TAPPING, Pan Hd, M4.2 x 16, M4.2 x 16
16	86000535	2	PLUG, 1.427" x .62", Plastic, Switch Hole
17	229378A1	1	SWITCH, Rocker, Differential Lock, Front
18	87417061	1	SWITCH, Rocker, Differential Lock, Rear
19	255676A1	1	SWITCH, Hitch Position
20	256304A2	1	POTENTIOMETER, Three Point Hitch
21	43362	2	NUT, M8, Cl 10,
22	256303A1	1	STUD, Stop Position
23	276797A1	1	KNOB, Stop Position
24	248087A1	1	LEVER, Stop Position
25	299483A2	1	LEVER, CONTROL, Hitch Position
26	323758A4	1	CONTROL UNIT, Three Point Hitch
27	86624184	2	WASHER, M8 x 16 x 1.6, 9 x 16 x 1.6 mm
28	43232	1	SCREW, M8 x 16; 10.9
29	414495A1	1	SWITCH, Power Takeoff
30	86625127	1	PLUG, Dome, .375" hole, Nylon, 3/8, Without Three Point Hitch
31	374705A1	1	PLUG, , Without Three Point Hitch
32	399285A1	1	UNIT, Module, Armrest Processor, Download Software for Module Assy. Processor from Service Tool.
32	87308356	1	MODULE, Armrest Processor, w/ Engine Brake Option, Download Software for Module Assy. Processor from Service Tool.
33	87440713	1	SWITCH, INTELLISTEER
34	86639292	6	SCREW, M4 x 10; 8.8
35	229373A1	1	SWITCH, EDC, Slip Limit Control
36	375844A1	1	NUT,
37	438399A1	4	KNOB, Remote Control, Grey
38	409641A2	1	KNOB, Remote Control, Ginger
39	409640A2	1	KNOB, Remote Control, Blue
40	409639A2	1	KNOB, Remote Control, Green
41	47112153	1	KNOB,

04 -01 CONTROLS - RIGHT HAND CONSOLE, BSN RVS003801

ссылка	Номер детали	Кол-во	Описание
42	353942A1	1	SWITCH, Scrapper, With Reynolds Drawbar
43	87310588	1	SWITCH, Engine Brake

04 -01(01) CONTROLS - RIGHT HAND CONSOLE, ASN RVS003801

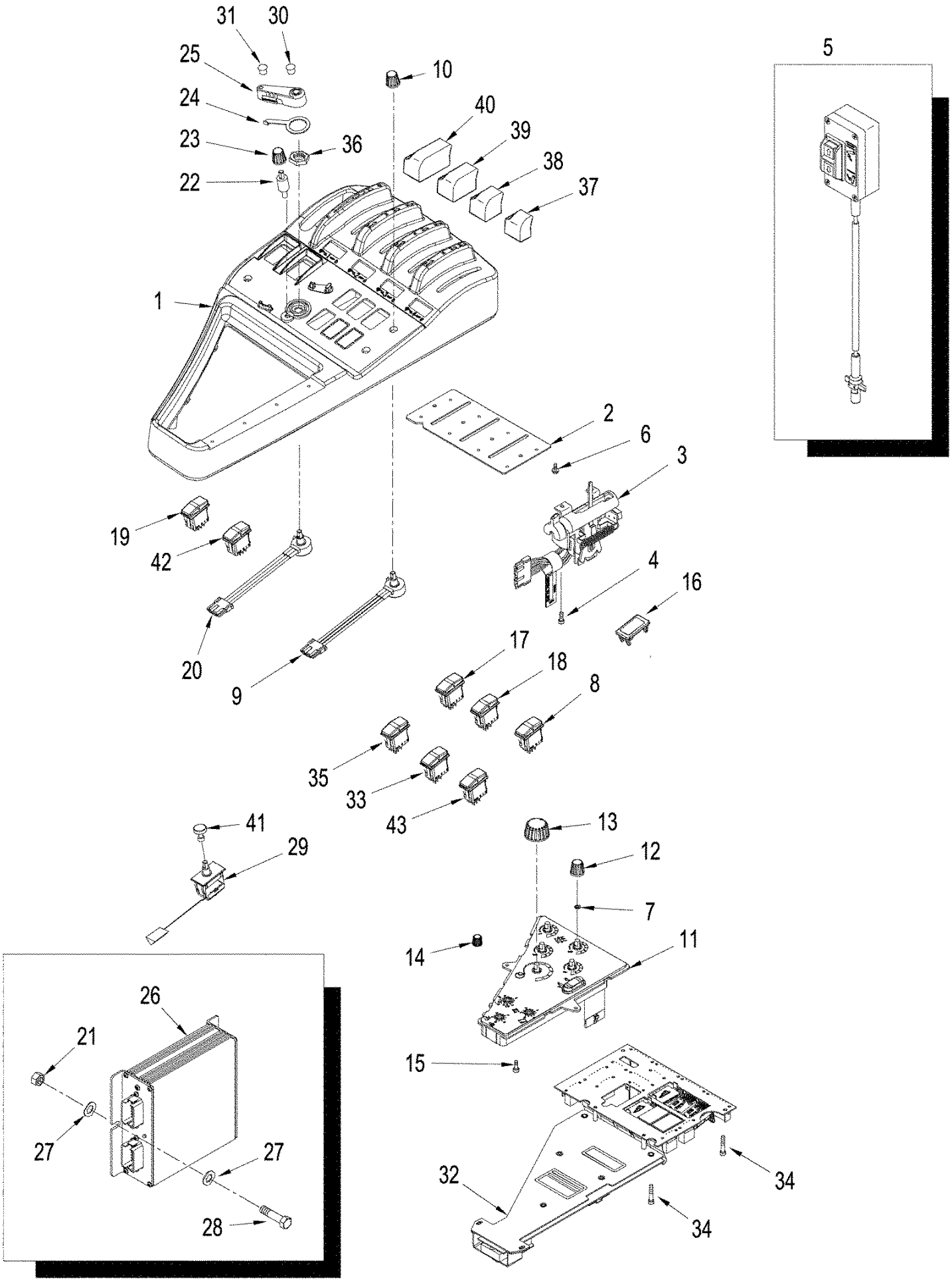

04 -01(01) CONTROLS - RIGHT HAND CONSOLE, ASN RVS003801

ссылка	Номер детали	Кол-во	Описание
1	87412968	1	COVER ASSY, Armrest Console, Right Hand, See Figure : 09-22
	87395318	1	CONTROL, Electronic, Inc. 2 - 4
2	230098A1	1	PLATE, Mounting
3	87395299	4	VALVE, CONTROL, Remote Auxiliary Valve
4	86637785	8	SCREW, Sltd Pan Hd, #8-32 x 3/8",
5	382247A1	1	SWITCH, Remote, Three Point Hitch
6	86639294	4	SCREW, Hex Soc Hd, M4 x 20, 8.8, Socket, M4 x 20
7	A39888	1	NUT,
8	86989947	1	SWITCH, Fifth Auxiliary Valve
9	256305A2	1	POTENTIOMETER, Flow Control
10	276797A1	1	KNOB, Flow Control
11	339735A1	1	PANEL, Secondary, With Three Point Hitch
11	238290A4	1	PANEL, Secondary, Without Three Point Hitch
12	276797A1	4	KNOB, Flow Control
13	187820A1	1	BUTTON, Remote Valve Timer Control
14	223433A1	2	KNOB, Electronic Draft Control, With Three Point Hitch
15	86639117	2	SCREW, SELF TAPPING, Pan Hd, M4.2 x 16, M4.2 x 16
16	406324A2	2	PLUG, Switch Hole
17	87417060	1	SWITCH, Rocker, Differential Lock, Front
18	87417061	1	SWITCH, Rocker, Differential Lock, Rear
19	86990406	1	SWITCH, Hitch Position
20	256304A2	1	POTENTIOMETER, Three Point Hitch
21	43362	2	NUT, M8, Cl 10,
22	256303A1	1	STUD, Stop Position
23	276797A1	1	KNOB, Stop Position
24	248087A1	1	LEVER, Stop Position
25	299483A2	1	LEVER, CONTROL, Hitch Position
26	323758A4	1	CONTROL UNIT, Three Point Hitch
27	86624184	2	WASHER, M8 x 16 x 1.6, 9 x 16 x 1.6 mm
28	43232	1	SCREW, M8 x 16; 10.9
29	414495A1	1	SWITCH, Power Takeoff
30	86625127	1	PLUG, Dome, .375" hole, Nylon, 3/8, Without Three Point Hitch
31	374705A1	1	PLUG, , Without Three Point Hitch
32	87454949	1	UNIT, Module, Armrest Processor, Download Software for Module Assy. Processor from Service Tool.
33	87422015	1	SWITCH, INTELLISTEER
34	87536486	6	SCREW, M4 x 10; 12.9
35	87414327	1	SWITCH, EDC, Slip Limit Control
36	375844A1	1	NUT,
37	438399A1	4	KNOB, Remote Control, Grey
38	409641A2	1	KNOB, Remote Control, Ginger
39	409640A2	1	KNOB, Remote Control, Blue
40	409639A2	1	KNOB, Remote Control, Green
41	47112153	1	KNOB, Power Takeoff
42	86989951	1	SWITCH, Scrapper, With Reynolds Drawbar
43	87308327	1	SWITCH, Engine Brake

04 -02 WIPER, WINDSHIELD - MOUNTING

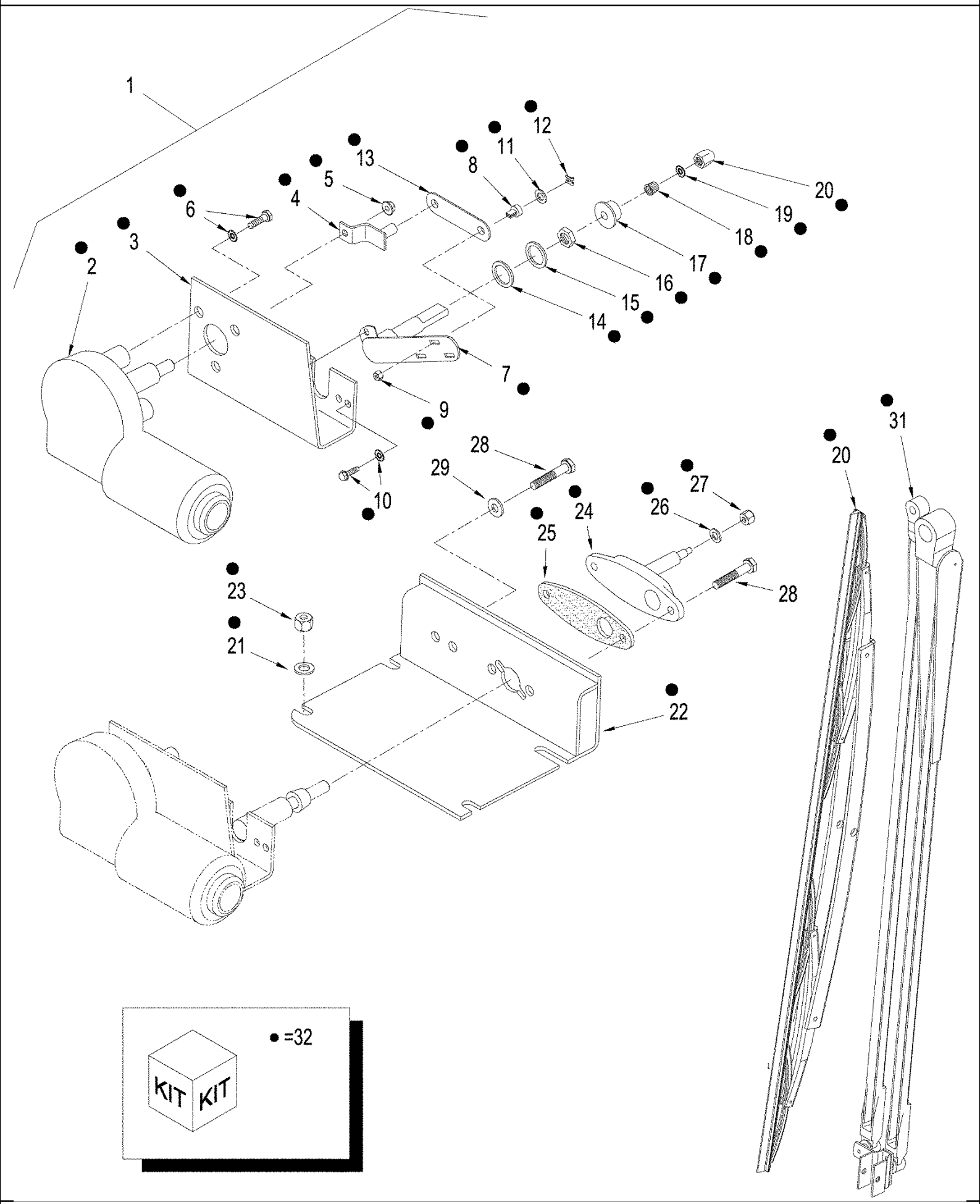

04 -02 WIPER, WINDSHIELD - MOUNTING

ссылка	Номер детали	Кол-во	Описание
	87408490	AR	WIPER MOTOR, Front, Upper, Inc. 2 - 20, 22, 24 - 29
	248812A4	1	WIPER MOTOR, Rear, Upper, Inc. 2 - 20, 22, 24 - 29
33	86000535	1	PLUG, 1.427" x .62", Plastic, Switch Hole, Not Illustrated
1	87307954	1	WIPER MOTOR, Repair, Front, Upper, Inc. 2 - 20
1	87308180	1	WIPER MOTOR, Upper, Rear, Inc. 2 -20
2	87307958	1	WIPER MOTOR, Front & Rear
3	60-6633T1	1	SUPPORT,
4	87307957	1	ARM,
5	86505868	1	NUT, M8, Flg Ser,
6	444867A1	3	SCREW, Button Hd
7	60-6581T91	1	DRIVE ASSY.,
8	NSS	1	NOT SERVICED SEPARATELY, Pin
9	NSS	1	NOT SERVICED SEPARATELY, Nut
10	281024	2	SCREW, Slotted Pan Hd, #10-32 x 1/2", Inc. Lock Washer
11	1-2684	2	WASHER,
12	1-2685	2	CLIP, Spring
13	1-2683	1	LINK,
14	9672276	1	WASHER, LOCK, Int Tooth, 3/8", Fiber
15	495-81032	1	WASHER, 23/32" x 1 1/4" x .060",
16	V23571	1	NUT,
17	V23568	1	CAP,
18	V23569	1	GUIDE, Knob, Knurled
19	60-6634T1	1	PLATE, LOCKING, Washer
20	60-6635T1	1	NUT,
21	86624184	4	WASHER, M8 x 16 x 1.6, 9 x 17 x 1.6 mm
22	248784A4	1	SUPPORT, Upper
23	86528579	4	NUT, LOCK, M8 x 1.25, Cl 10,
	435472A1	1	PIVOT ASSY., Pantograph, Inc. 24 - 27
24	NSS	1	NOT SERVICED SEPARATELY, Body, Pantograph
25	2-4190T1	1	GASKET, Mounting
26	2-4191T1	1	WASHER,
27	2-4192T1	4	NUT,
28	86637928	3	BOLT, Hex, 1/4"-28 x 1 1/2", G5, 1/4 NF x 1-1/2
29	87361	1	WASHER, 1/4", SAE,
30	353273A1	AR	BLADE, Wiper, 24", Front / Rear
31	334714A2	AR	ARM, 20
32	719518003	1	KIT, Rear Washer / Wiper, See Figure(s): 04-03, 04-17

04 -03 WINDSHIELD WASHER

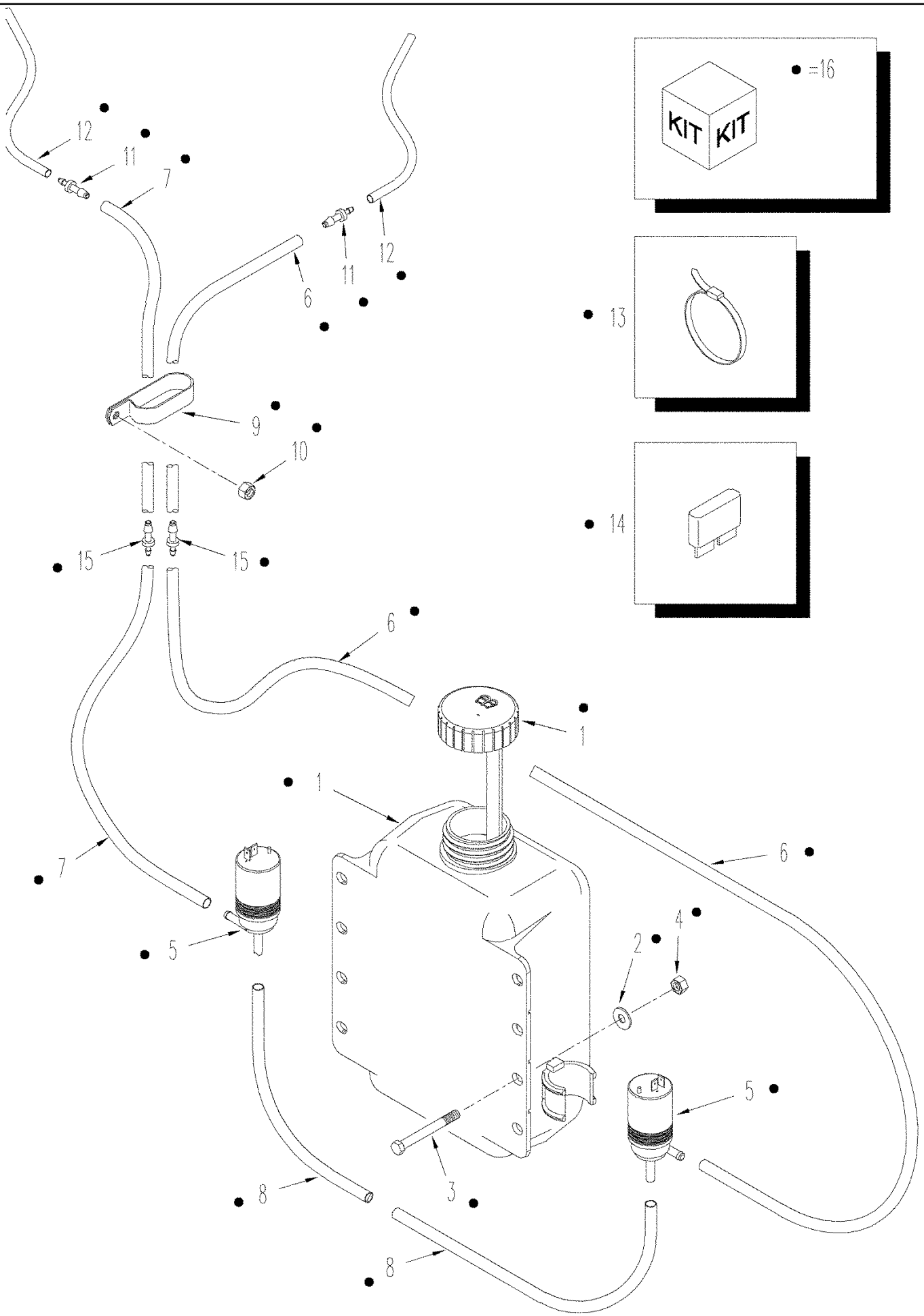

04 -03 WINDSHIELD WASHER

ссылка	Номер детали	Кол-во	Описание
1	313576A1	1	RESERVOIR,
2	86624184	4	WASHER, M8 x 16 x 1.6, 9 x 17 x 1.6 mm
3	43465	4	BOLT, CARRIAGE, Short NK, M8 x 30, Cl8.8, Full Thd,
4	43362	4	NUT, M8, Cl 10,
5	1964696C2	3	PUMP,
6	398715A1	1	HOSE, 4775 mm (188 in), Front Wiper
7	398714A1	1	HOSE, 3302 mm (130 in), Rear Wiper
8	435453A1	2	HOSE, 254 mm (10 in), Cut From : 443074A1
9	369708A1	4	CLAMP,
10	86500689	2	NUT, M10, Cl 10, M10; 10.9
11	435452A1	2	FITTING, REDUCER, 3/16 x 7/64
12	435453A1	2	HOSE, 200 mm (8 in), Front / Rear wiper
13	435437A1	2	STRAP, CABLE, 7 in
14	121414A1	1	FUSE, 20 amp
15	324203A1	2	VALVE, CHECK,
16	719518003	1	KIT, Rear Wiper / Washer, See Figure(s) : 04-02, 04-17

04 -04 INSTRUMENT CLUSTER

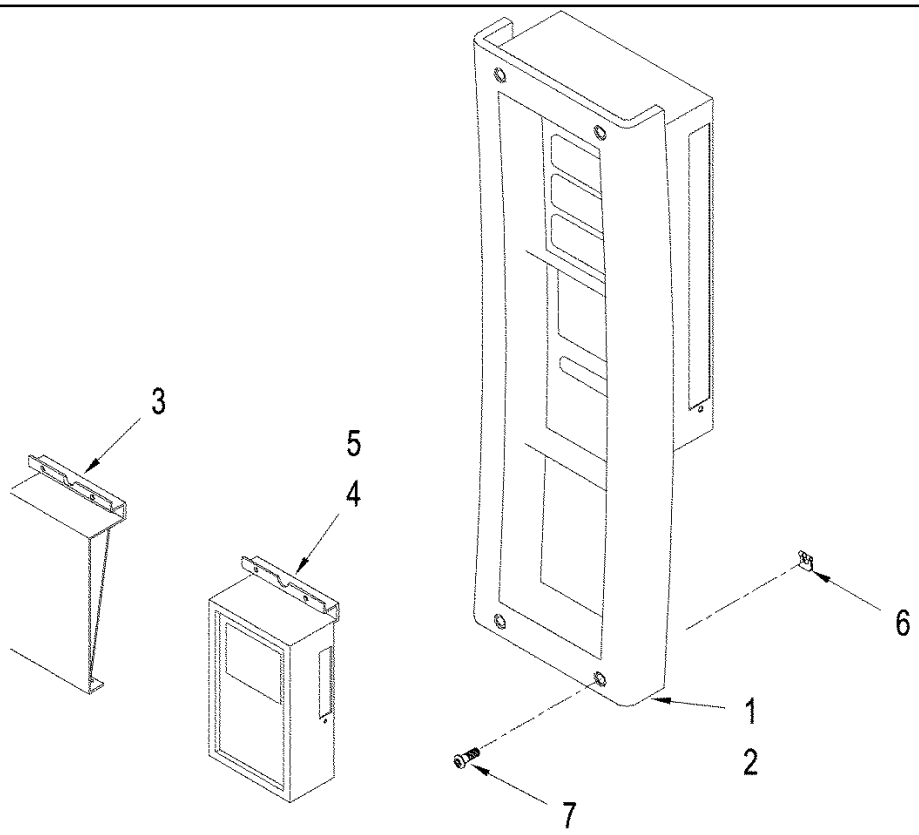

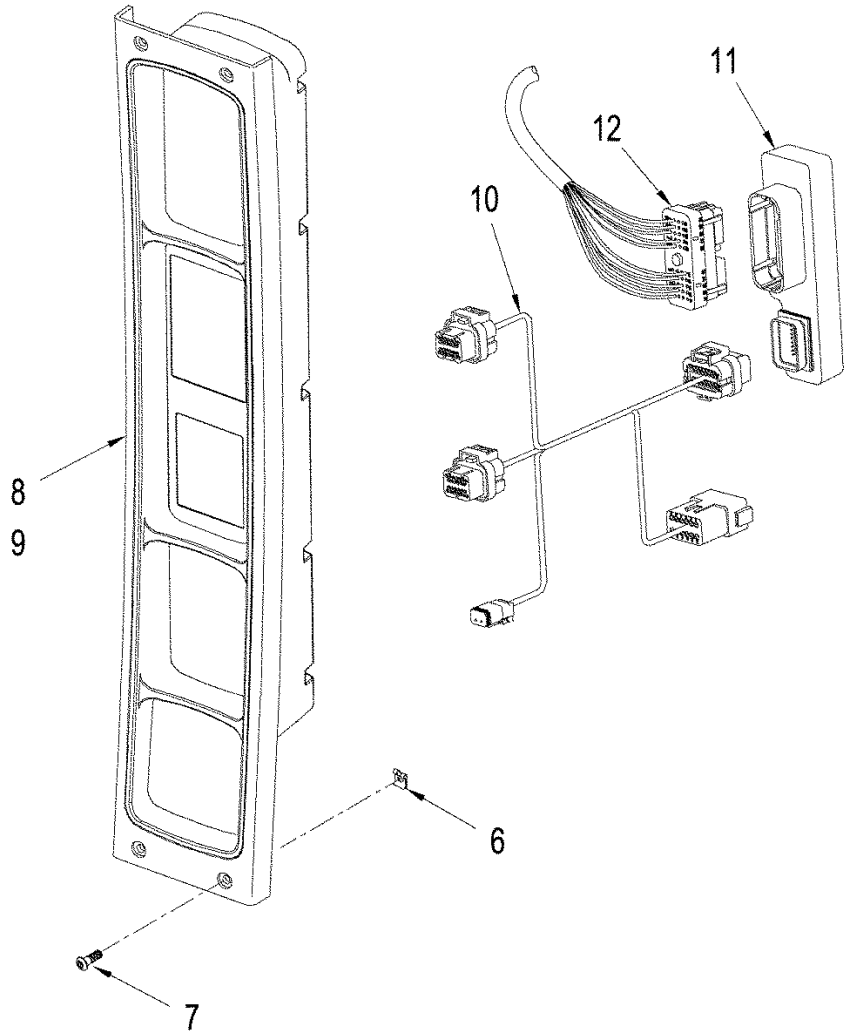

04 -04 INSTRUMENT CLUSTER

ссылка	Номер детали	Кол-во	Описание
1	86989497	1	CLUSTER, INSTRUMENT,
2	NSS	1	NOT SERVICED SEPARATELY, Software, Not Illustrated, Download Software for Module Assy. Processor from Service Tool., BSN RVS003801
3	407806A1	1	PANEL, , Without Performance Monitor Module, BSN RVS003801
4	406771A1	1	CLUSTER, INSTRUMENT, Performance Monitor, BSN RVS001801
4	86990265	1	CLUSTER, INSTRUMENT, Performance Monitor, BTW RVS001801 & RVS003801
5	NSS	1	NOT SERVICED SEPARATELY, Software, Performance Monitor, Not Illustrated, Download Software for Module Assy. Processor from Service Tool.
6	177269A1	4	NUT, Special
7	86525168	4	TUBE, No. 10 x 1
8	87307897	1	MODULE, Basic, ASN RVS003801
8	87307898	1	MODULE, Deluxe, ASN RVS003801
9	NSS	1	NOT SERVICED SEPARATELY, Software, Basic / Deluxe Instrument, Not Illustrated, ASN RVS003801
10	87314360	1	HARNESS, Jumper, ICU to ICU2, Used to Convert BSN RVS003801 ICU to ASN RVS003801 ICU2, With Power Shift Transmission
10	87314361	1	HARNESS, Jumper, ICU to ICU2, Used to Convert BSN RVS003801 ICU to ASN RVS003801 ICU2, With Manual Shift Transmission
11	87314358	1	ADAPTER, Module, ICU to ICU2, Used to Convert BSN RVS003801 ICU to ASN RVS003801 ICU2
12	REF	1	INSTRUCTION, Harness, Main Cab, See Figure: 04-23 & 04-24

04 -05 SENSOR - HITCH POSITION

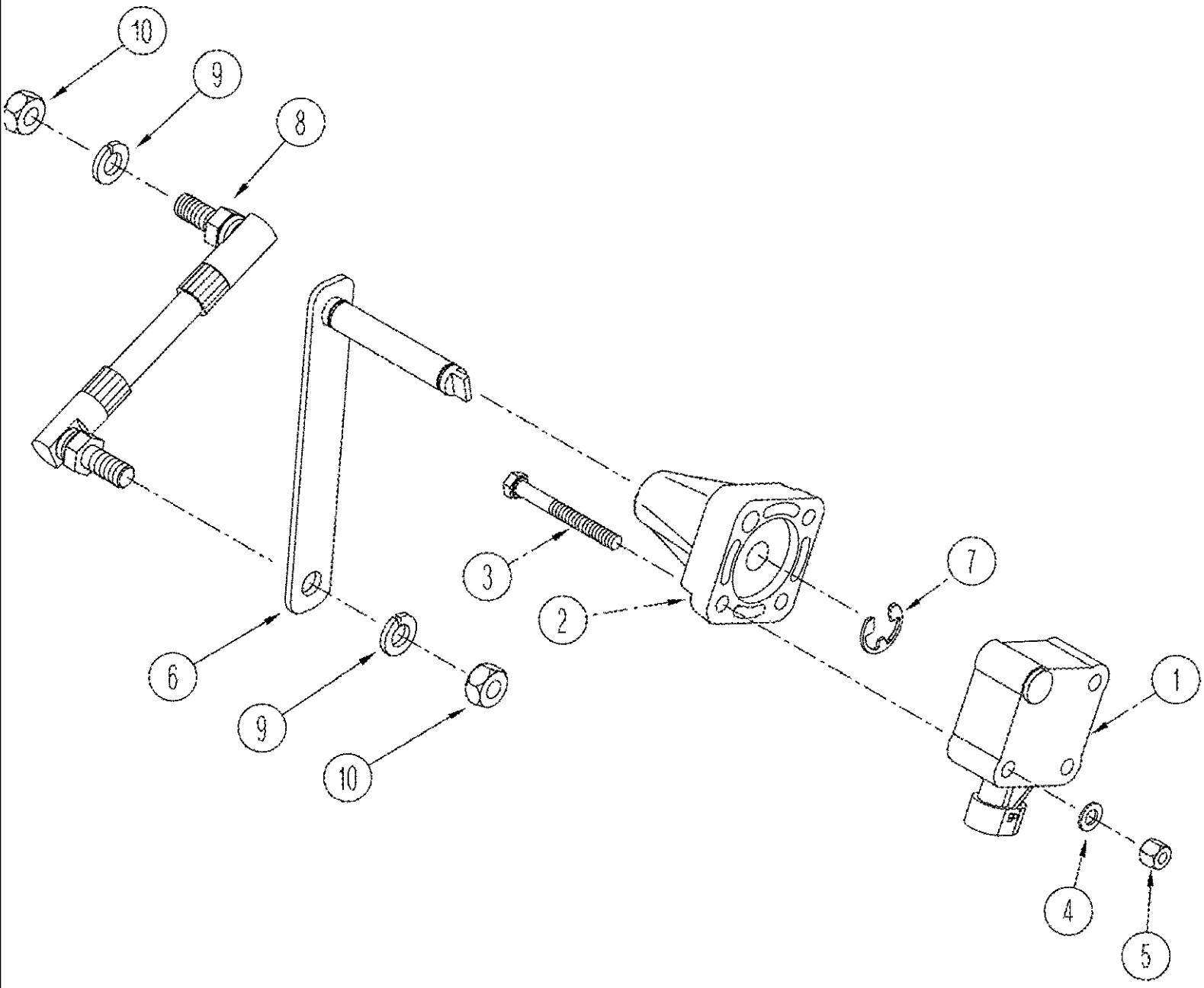

TJ375 TRACTOR - Electrical System

04 -05 SENSOR - HITCH POSITION

ссылка	Номер детали	Кол-во	Описание
1	283659A1	1	SENSOR, Hitch Position
2	305020A2	1	BUSHING,
3	86639027	3	BOLT, Hex, M5 x 45, 8.8, Full Thd, M5 x 45; 8.8
4	86625261	3	WASHER, M5 x 10 x 1, 5.5 x 10 x 1 mm
5	86639241	3	NUT, LOCK, M5 x .8, Cl 8, M5
6	353926A1	1	ARM,
7	86639141	2	CIRCLIP, M10, Retaining
8	358978A1	1	ROD, Tie
9	80681	2	WASHER, LOCK, 5/16",
10	43362	2	NUT, M8, Cl 10,

04 -06(1) ALTERNATOR 135 AMPHERE - MOUNTING

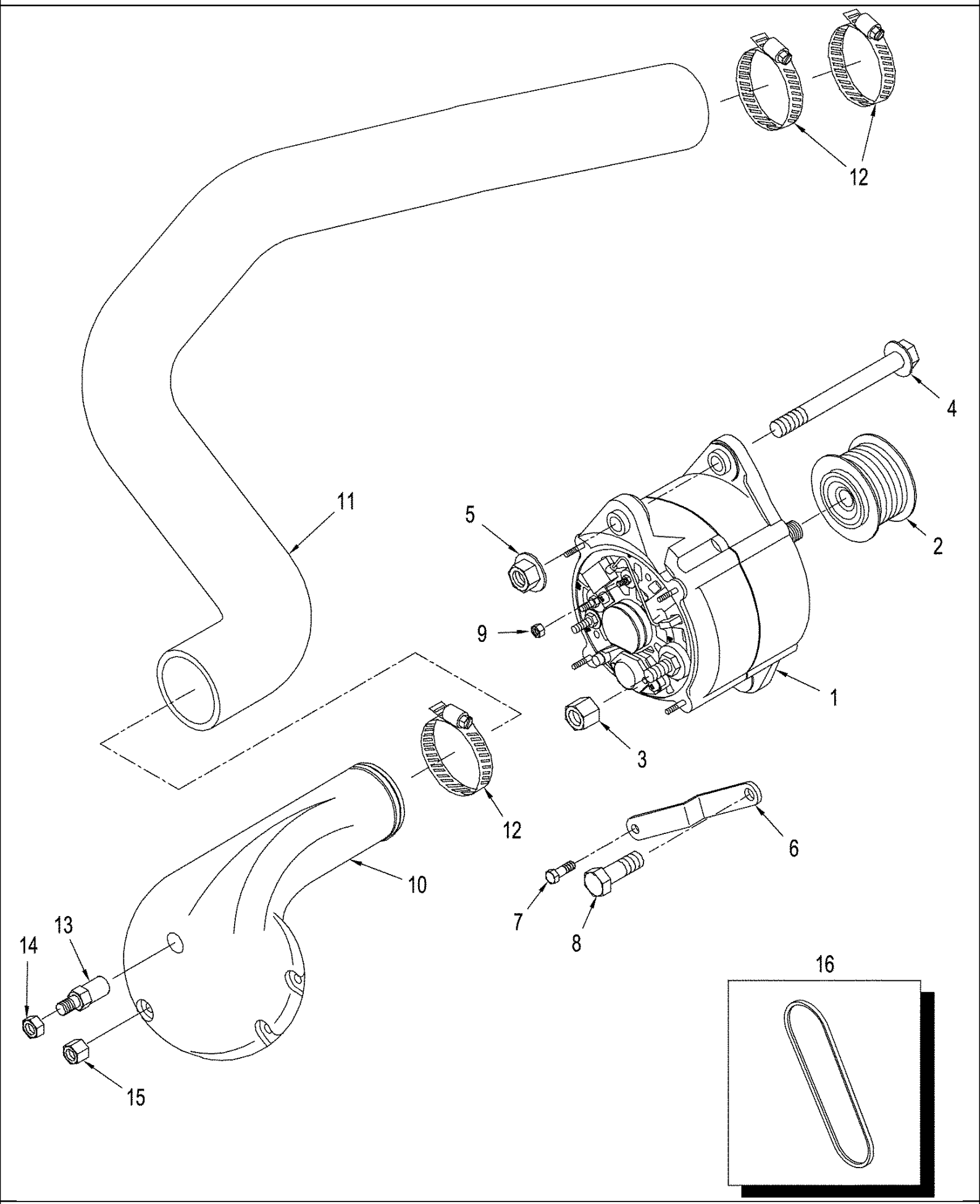

04 -06(1) ALTERNATOR 135 AMPHERE - MOUNTING

ссылка	Номер детали	Кол-во	Описание
1	86994128	1	ALTERNATOR, 135 amp, See Figure : 4-07
2	NSS	1	NOT SERVICED SEPARATELY, Pulley, Order From Your Cummins Engine Dealer
3	86637736	1	NUT, LOCK, 7/16"-14, GB, 7/16
4	NSS	1	NOT SERVICED SEPARATELY, Bolt, Flange, M12 x 50; 10.9, Order From Your Cummins Engine Dealer
5	NSS	1	NOT SERVICED SEPARATELY, Nut, Flange, M12 x 1.75; 10.9, Order From Your Cummins Engine Dealer
6	NSS	1	NOT SERVICED SEPARATELY, Support, Order From Your Cummins Engine Dealer
7	NSS	1	NOT SERVICED SEPARATELY, Screw, M10 x 30, Order From Your Cummins Engine Dealer
8	NSS	1	NOT SERVICED SEPARATELY, Screw, HH, 1/2 x 1-1/4; 8, Order From Your Cummins Engine Dealer
9	86625075	1	NUT, LOCK, M4 x .7, Cl 8, M4
10	86983592	1	COVER, Alternator Cooling, ASN RVS0001873
11	86983593	1	HOSE, , ASN RVS0001873
12	86633353	3	CLAMP, HOSE, 2.75/3.625 HD Worm, 3-1/2 in, ASN RVS0001873
13	87405340	1	ADAPTER, , ASN RVS0001873
14	86637736	1	NUT, LOCK, 7/16"-14, GB, 7/16, ASN RVS0001873
15	86625075	1	NUT, LOCK, M4 x .7, Cl 8, M4, CL8, ASN RVS0001873
16	87437226	1	BELT, Accessory Drive, Alternator & A/C

04 -06(2) HIGH CAPACITY ALTERNATOR - MOUNTING, 185 AMPERE

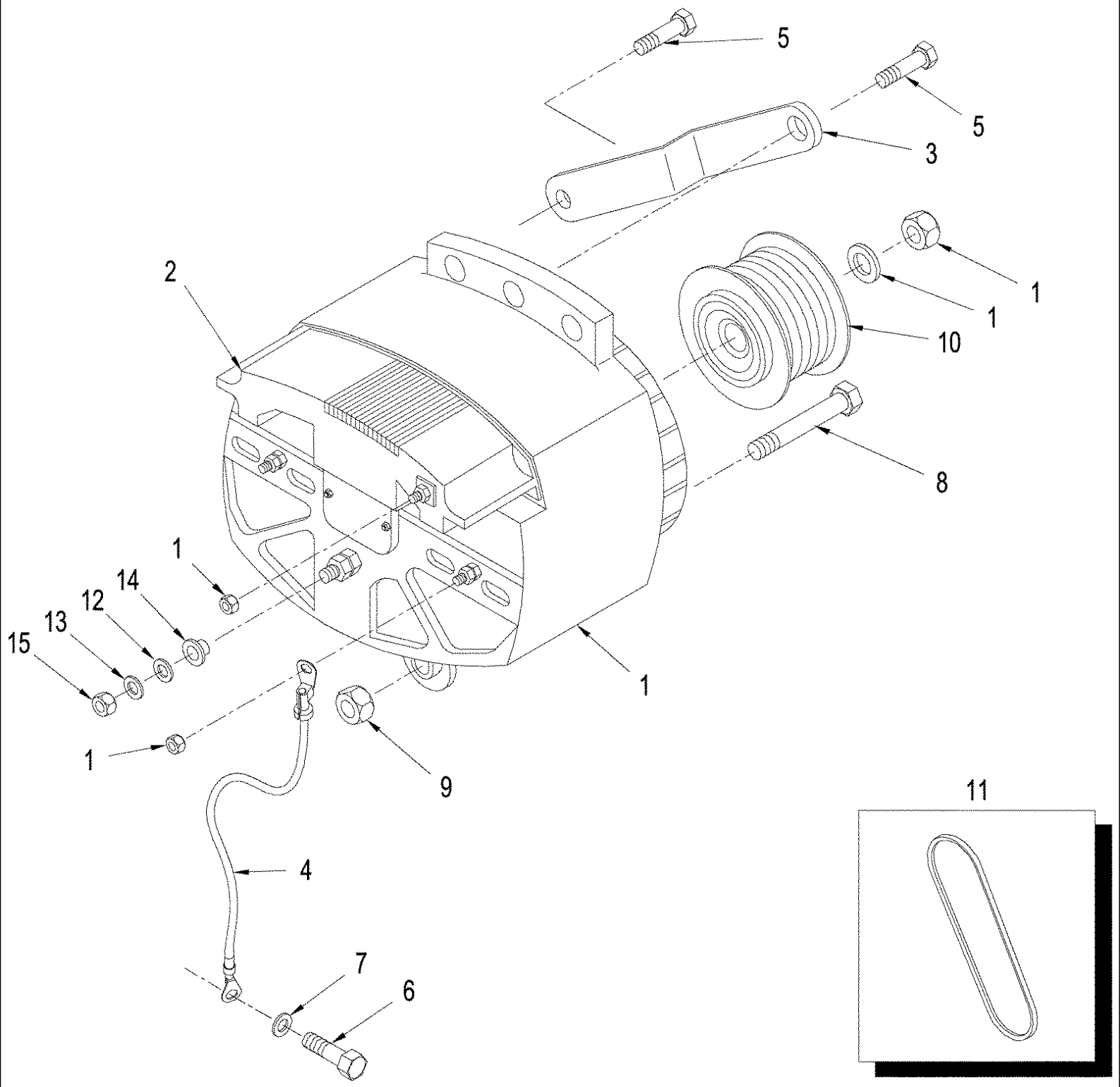

04 -06(2) HIGH CAPACITY ALTERNATOR - MOUNTING, 185 AMPERE

ссылка	Номер детали	Кол-во	Описание
1	87409250	1	ALTERNATOR, 185 amp, Inc. 2
2	87018506	1	REGULATOR, VOLTAGE,
3	432436A1	1	STRAP,
4	432439A1	1	CABLE, Ground
5	NSS	2	NOT SERVICED SEPARATELY, Bolt, Order From Your Cummins Engine Dealer
6	398792	1	BOLT, Hex, M12 x 25, 10.9, Cap, HH, CL 10.9, M12 x 1.75 x 25
7	86625255	1	WASHER, M13.5 x 24.5 x 3, HT,
8	NSS	1	NOT SERVICED SEPARATELY, Bolt, Order From Your Cummins Engine Dealer
9	NSS	2	NOT SERVICED SEPARATELY, Nut, Order From Your Cummins Engine Dealer
10	432437A1	1	PULLEY,
11	87437226	1	BELT, Accessory Drive, Alternator & A/C
12	495-11034	1	WASHER, 5/16", SAE,
13	492-11031	1	WASHER, LOCK, 5/16",
14	87387851	1	ADAPTER, Connection
15	425-115	1	NUT, 5/16"-24, G5,

04 -07 ALTERNATOR ASSY - 135 AMPERE

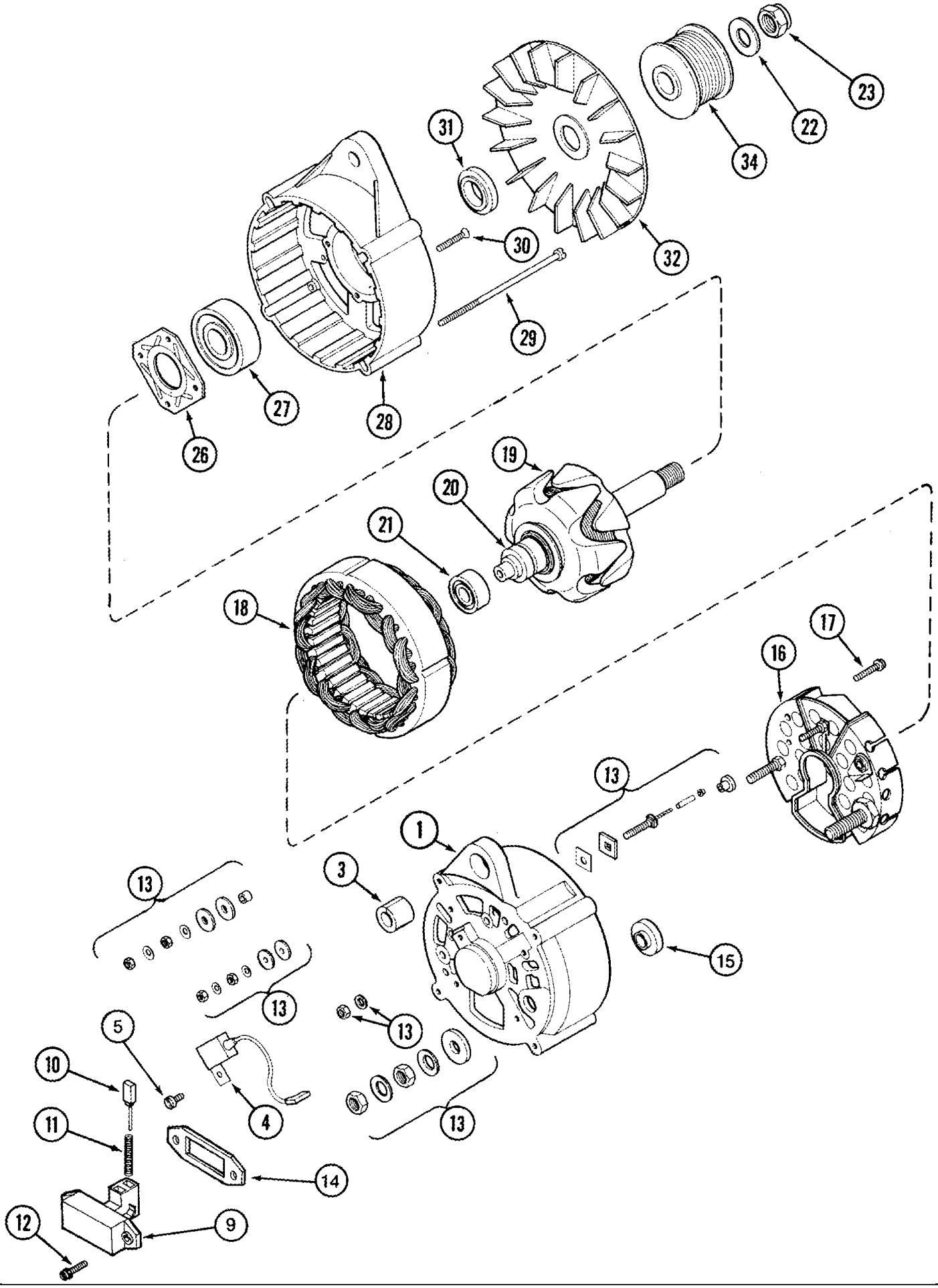

TJ375 TRACTOR - Electrical System

04 -07 ALTERNATOR ASSY - 135 AMPERE

ссылка	Номер детали	Кол-во	Описание
	86994128	1	ALTERNATOR, 135 amp, Inc. 1 - 32
1	1964731C1	1	HOUSING,
3	1964737C1	1	BUSHING,
4	3079389R1	1	CAPACITOR,
5	1964969C1	1	BOLT,
9	111899A1	1	REGULATOR,
10	1964968C1	1	BRUSH,
11	1964734C1	2	SPRING,
12	A187504	2	SCREW, Special
13	1964738C1	1	KIT, REPAIR, Parts
14	140546A1	1	GASKET,
15	140545A1	1	BUSHING,
16	1964732C1	1	RECTIFIER,
17	A186194	2	SCREW, Sltd Truss Hd, M4 x 18, w/LW,
18	140548A1	1	STATOR,
19	1964728C1	1	ROTOR,
20	140543A1	1	RING,
21	1964730C1	1	BEARING, BALL, Ball
22	18606	1	WASHER, 9/16", 5/8 x 1-15/32 x 7/64
23	86637650	1	NUT, LOCK, 5/8"-18, GB, Lock, 5/8 NF
26	1964727C1	1	PLATE,
27	1964726C1	1	BEARING, BALL, Ball
28	1964725C1	1	HOUSING,
29	140549A1	4	SCREW, Special
30	140541A1	4	SCREW,
31	1964729C1	1	SPACER,
32	1964736C1	1	FAN,
34	NSS	1	NOT SERVICED SEPARATELY, Pulley, Order From Your Cummins Engine Dealer

04 -08 STARTER ASSY, BSN RVS001918

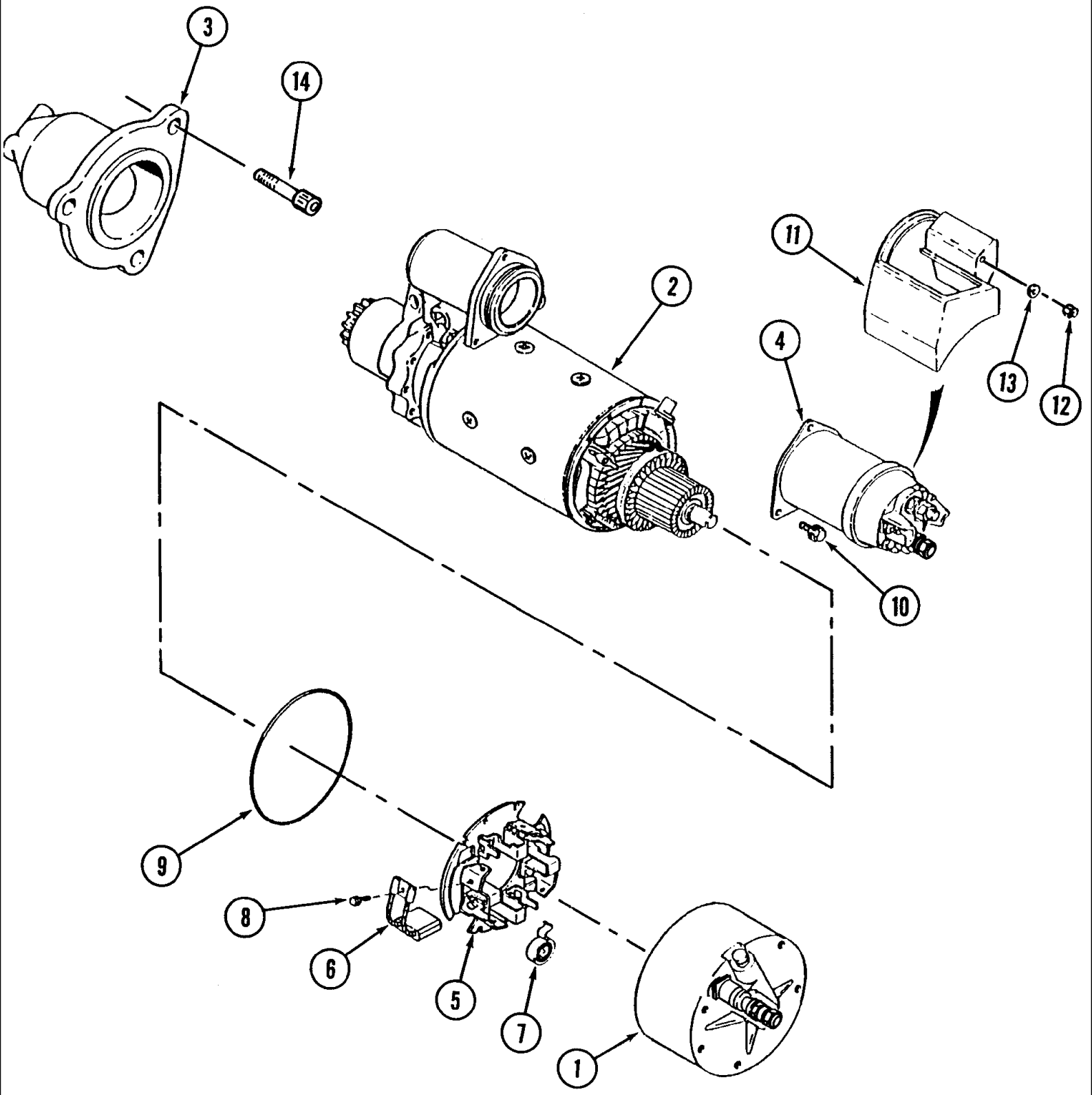

TJ375 TRACTOR - Electrical System

04 -08 STARTER ASSY, BSN RVS001918

ссылка	Номер детали	Кол-во	Описание
	87409259	1	STARTING MOTOR, 12 volt, 42MT, Delco Remy, Consists Of : 1 - 13
1	NSS	1	NOT SERVICED SEPARATELY, Cover Assy., Commutator End, Consists Of : 2 - 4
2	NSS	1	NOT SERVICED SEPARATELY, Housing, Shift Lever
3	NSS	1	NOT SERVICED SEPARATELY, Housing, Drive End
4	419816A1	1	SOLENOID, Magnetic, With Shield
5	NSS	1	NOT SERVICED SEPARATELY, Plate
	81774C1	1	SET, BRUSHES, Brush, Inc. 6 - 9
6	NSS	1	NOT SERVICED SEPARATELY, Brush
7	NSS	1	NOT SERVICED SEPARATELY, Spring
8	NSS	1	NOT SERVICED SEPARATELY, Screw
9	NSS	1	NOT SERVICED SEPARATELY, O-Ring, 4-3/4 ID x 3/32
10	NSS	4	NOT SERVICED SEPARATELY, Bolt, Special, 1/4 NC x 35/64
11	L128826	1	SHIELD,
12	87825	1	NUT, #10-32,
13	80684	1	WASHER, LOCK, #10,
14	NSS	3	NOT SERVICED SEPARATELY, Screw, 2 x 1/16, Order From Your Cummins Engine Dealer

04 -08(01) STARTER ASSY., ASN RVS001918

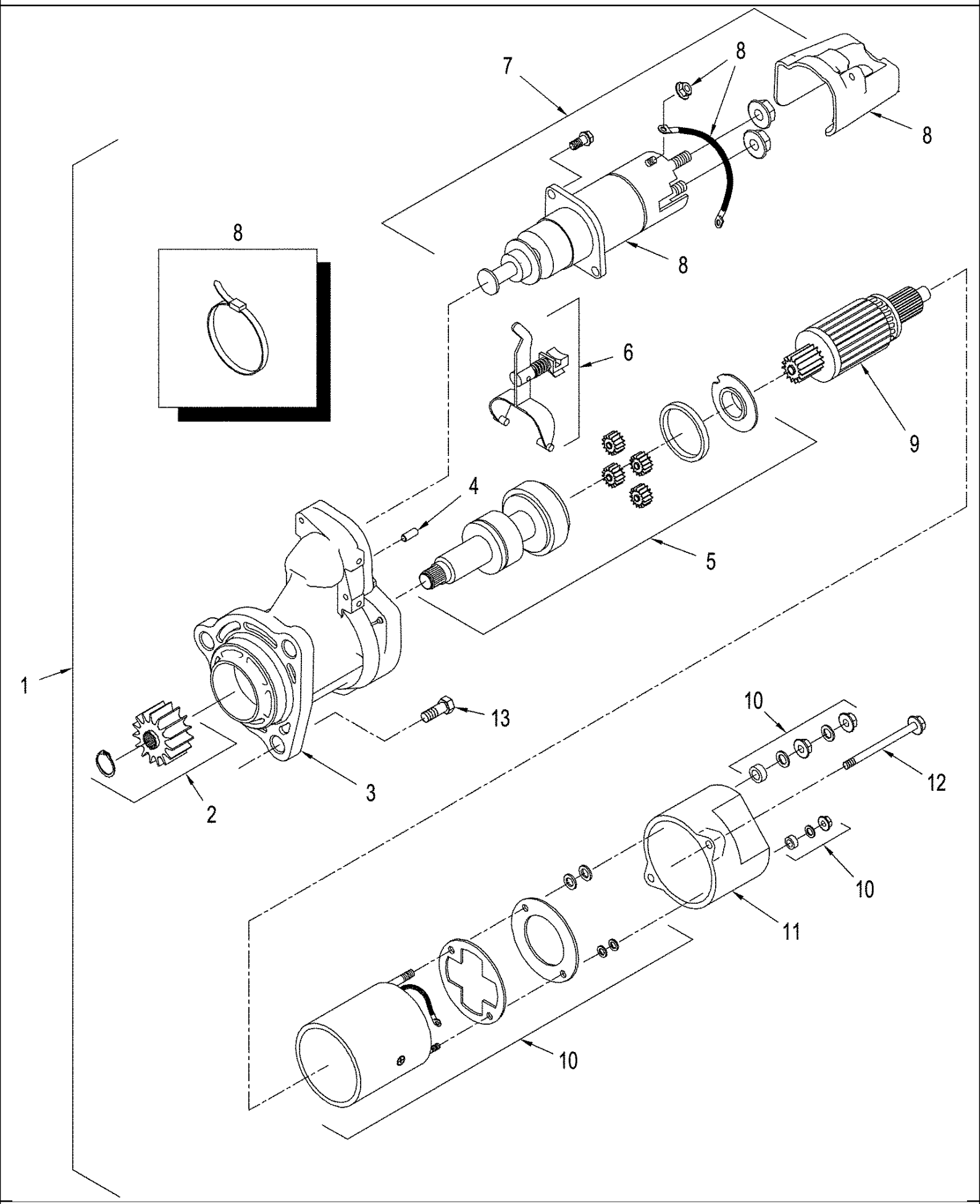

TJ375 TRACTOR - Electrical System

04 -08(01) STARTER ASSY., ASN RVS001918

ссылка	Номер детали	Кол-во	Описание
1	87415662	1	STARTING MOTOR, Starter, 12V, 39MT-HD, Delco Remy, Inc. 2 - 12, BTW RVS001918 & RVS00270
1	87417339	1	STARTING MOTOR, Starter, 24V, 39MT-HD, Delco Remy, Inc. 2 - 12, ASN RVS002701
2	87429796	1	PINION, Assy.
3	87429803	1	HOUSING, Inc. 4
4	NSS	1	NOT SERVICED SEPARATELY, Pin, Roll
5	87429799	1	DRIVE ASSY., without Pinion
6	87429793	1	LEVER ASSY.,
7	87429798	1	SOLENOID, Assy., 12V, with Jump Start Shield, BTW RVS002701 & RVS001918
7	87429797	1	SOLENOID, Assy., 24V, with Jump Start Shield, ASN RVS002701
8	87454482	1	KIT, FIP, Jump Start
9	87429801	1	ARMATURE, 12V, BTW RVS002701 & RVS001918
9	87429802	1	ARMATURE, 24V, ASN RVS002701
10	87429795	1	BRUSH ASSY., 12V, BTW RVS002701 & RVS001918
10	87429794	1	BRUSH ASSY., 24V, ASN RVS002701
11	87429800	1	HOUSING, Communicator End
12	87429804	2	BOLT,
13	NSS	3	NOT SERVICED SEPARATELY, Bolt, Mounting, 2 x 1/16, G8.8, Order From Your Cummins Engine Dealer

04 -09 GROUND SPEED SENSOR

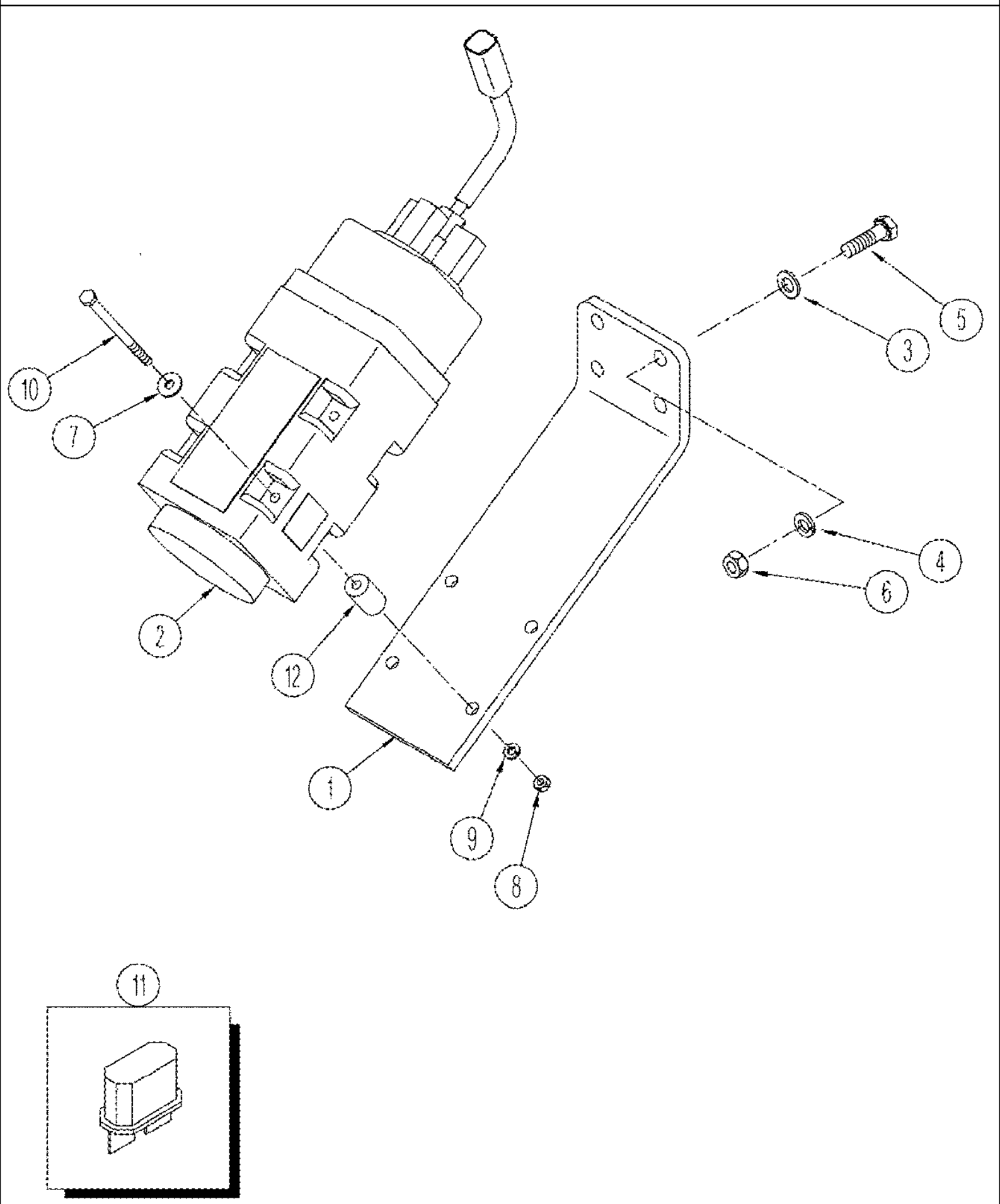

04 -09 GROUND SPEED SENSOR

ссылка	Номер детали	Кол-во	Описание
	719571003	1	KIT, Ground Speed, Inc. 1 - 12
1	414936A1	1	SUPPORT,
2	228760A1	1	RADAR, Ground Speed
3	86624176	4	WASHER, M10 x 20 x 2, M10
4	140028	4	WASHER, LOCK, M10,
5	86624978	4	BOLT, Hex, M10 x 35, 10.9, Full Thd,
6	86500689	4	NUT, M10, Cl 10, M10; 10.9
7	86624182	4	WASHER, M6 x 18 x 1.6,
8	86500688	4	NUT, M6, Cl 10,
9	86517328	4	WASHER, LOCK, M6,
10	86639208	4	BOLT, Hex, M6 x 100, 10.9, M6 x 100; 10.9
11	121412A1	1	FUSE, 10 AMP
12	414937A1	4	SPACER,

04 -10 RADIO AND SPEAKERS

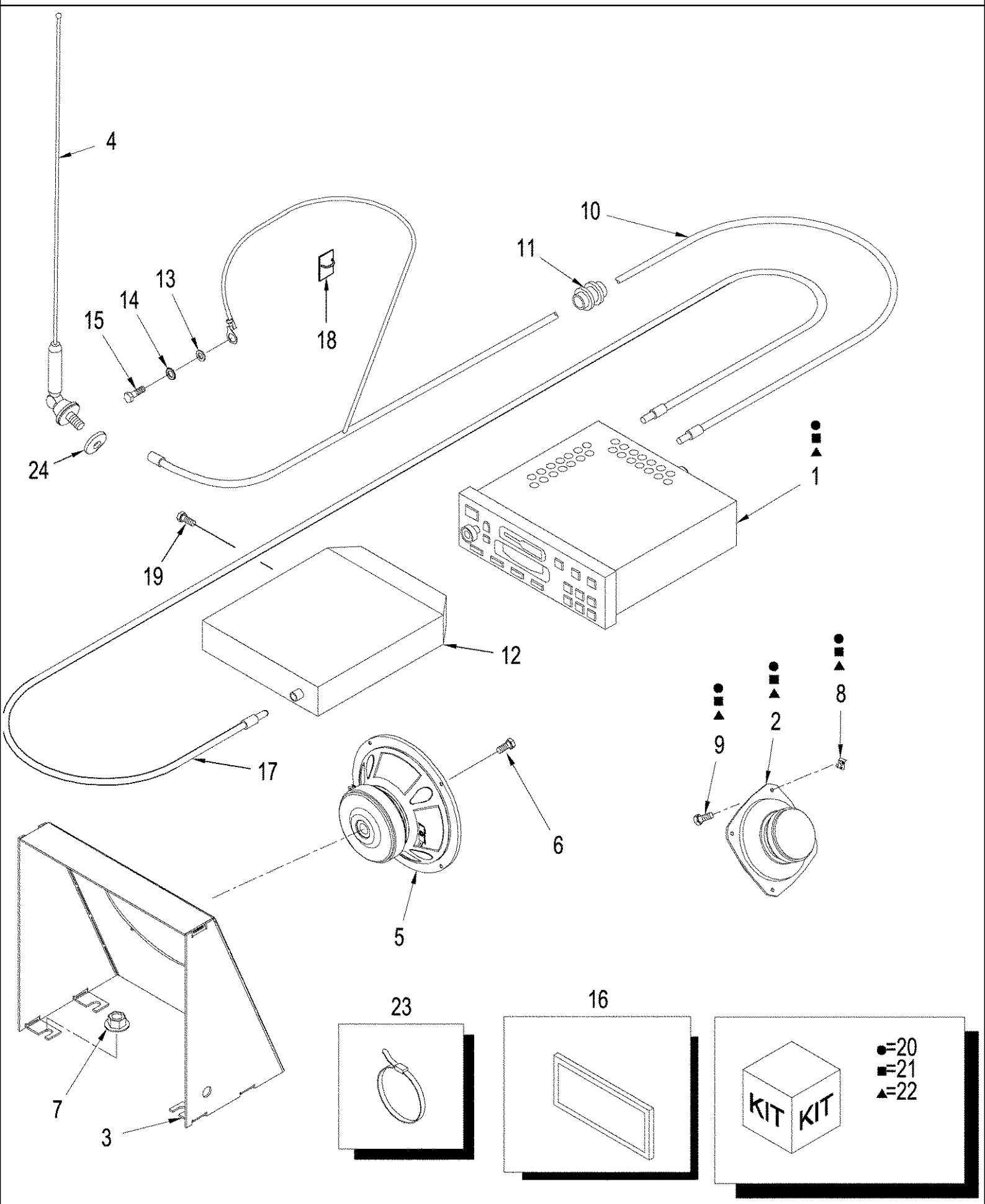

TJ375 TRACTOR - Electrical System

04 -10 RADIO AND SPEAKERS

ссылка	Номер детали	Кол-во	Описание
1	366631A2	1	RADIO, AM / FM / WB
1	355623A2	1	RADIO, AM / FM / WB / Cassette
1	325061A2	1	RADIO, AM / FM / WB / Cassette / CD Changer Ready
1	86998223	1	RADIO, Delco, AM / FM / WB/ Single CD
2	258342A2	2	SPEAKER, Co-Axial
3	388445A1	1	HOUSING, Subwoofer
4	360215A1	1	NO DESCRIPTION,
5	388444A1	1	SPEAKER, Subwoofer, 8"
6	760-14316	4	SCREW, SELF TAPPING, Pan Hd, M4.2 x 16,
7	86505868	4	NUT, M8, Flg Ser,
8	177269A1	8	NUT, Special
9	1270741C1	8	SCREW, SELF TAPPING, Cross Pan Hd, #8 x 1", Pointed
10	360432A2	1	HARNESS, Antenna, Inc. 11
11	NSS	1	NOT SERVICED SEPARATELY, Grommet
12	317688A1	1	Player, Compact Disc, Delco, 6 Disc
13	86624181	1	WASHER, M6, 6.6 x 12 x 1.6 mm
14	86625265	1	WASHER, LOCK, Ext Tooth, M6, M6
15	86639137	1	SCREW, SELF TAPPING, Hex Hd, M6.3 x 13, M6.3 st x 13
16	1535219C1	1	COVER, , Without Radio
17	449071A1	1	HARNESS, CD Changer, 5486 mm (216 in)
18	388489A1	1	CLIP, ELECTRICAL,
19	86625213	3	SCREW, Hex Soc Hd, M5 x 12, 8.8, Socket, M5 x 12
20	334229A1	1	KIT, AM / FM / WB / Cassette / CD, Inc. 1, 2, 8, 9
21	186158A1	1	KIT, AM / FM / WB, Inc. 1, 2, 8, 9
22	719582003	1	KIT, Single CD Player / Radio
23	L18331	1	STRAP, CABLE, Tie
24	87343754	1	SPACER,

04 -11 LAMP - STROBE

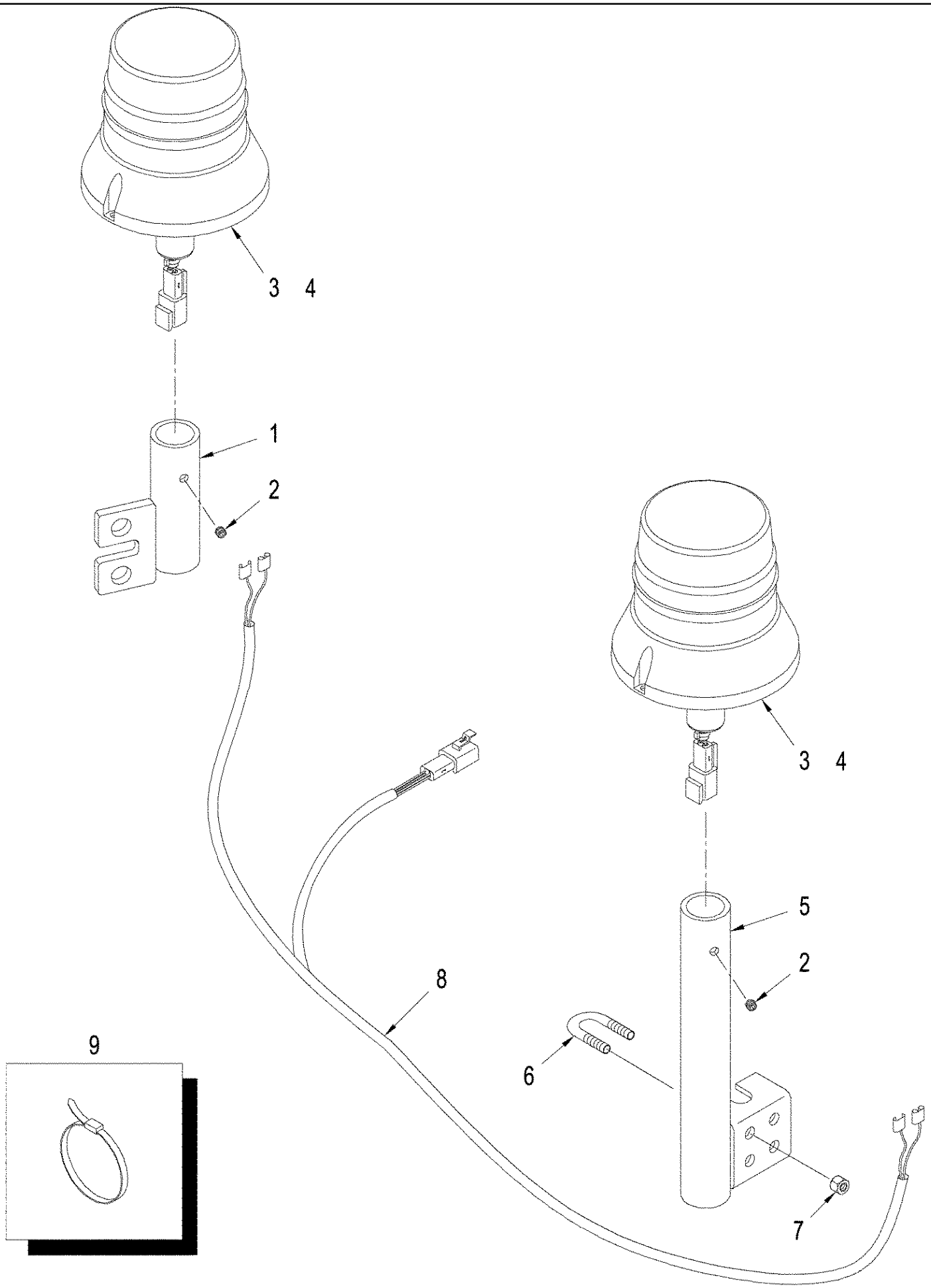

TJ375 TRACTOR - Electrical System

04 -11 LAMP - STROBE

ссылка	Номер детали	Кол-во	Описание
1	383983A1	1	BRACKET, Mounting
2	86639305	1	SET SCREW, Hex Soc, M6 x 6, Cup Pt, M6 x 6
3	279013A3	1	LAMP, Strobe, Inc. 4
4	323095A1	1	BULB, , Download Software for Module Assy. Processor from Service Tool.
5	387938A2	1	SUPPORT ASSY., Mounting, Europe Option
6	253105A1	2	U-BOLT, M8, Europe Option
7	412250	4	NUT, LOCK, M8 x 1.25, Cl 8, , Europe Option
8	396484A1	1	HARNESS, Beacon Light
9	L18331	1	STRAP, CABLE, Tie

04 -12 LAMPS - REAR FRAME, H.I.D.

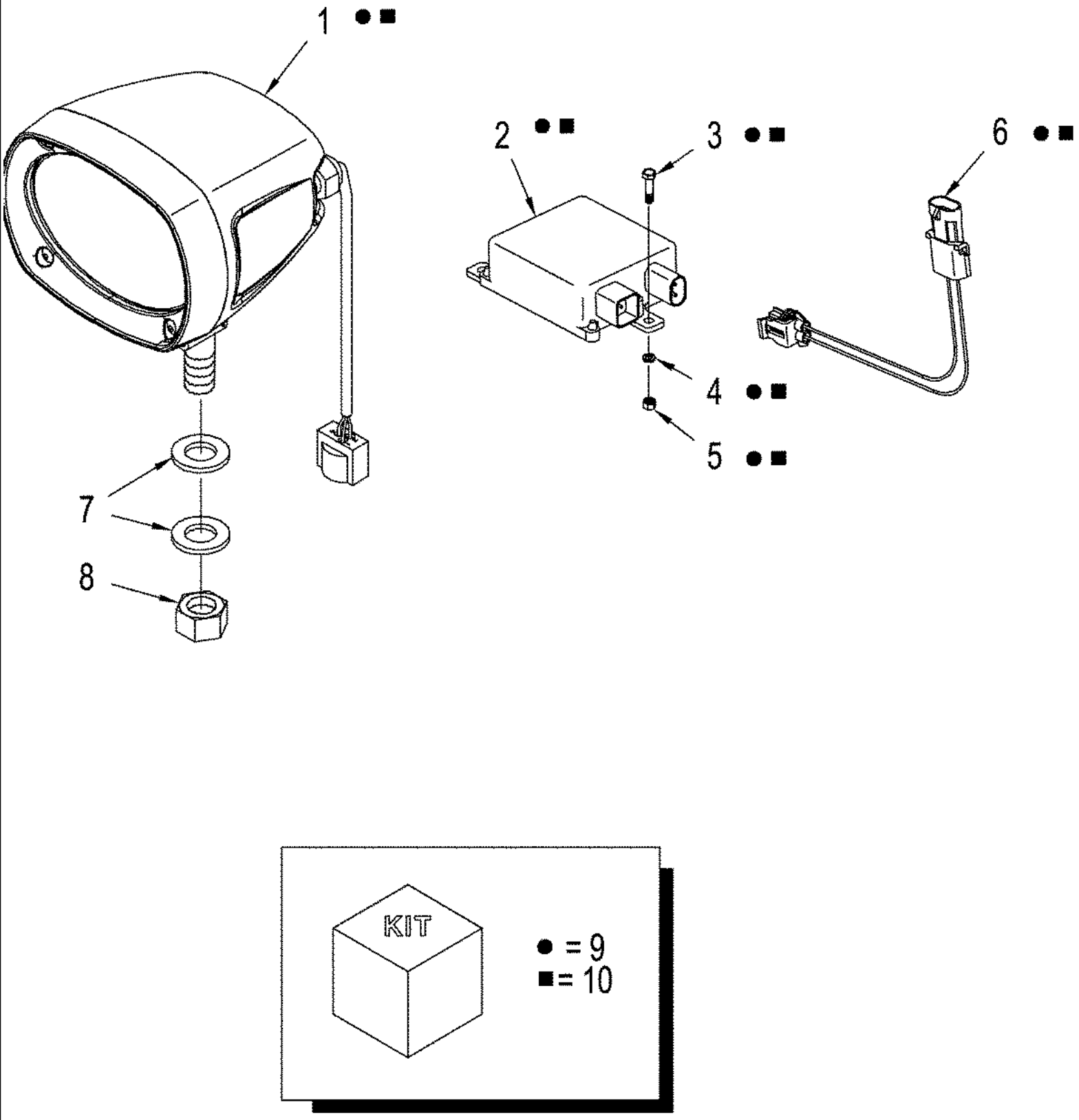

TJ375 TRACTOR - Electrical System

04 -12 LAMPS - REAR FRAME, H.I.D.

ссылка	Номер детали	Кол-во	Описание
1	87419587	2	LAMP, Flood
1	87419591	2	LAMP, Trap
2	447742A1	AR	Ballast,
3	120098	8	BOLT, Hex, M5 x 20, 8.8, Full Thd,
4	9824326	8	WASHER, M5,
5	86639241	8	NUT, LOCK, M5 x .8, Cl 8, M5, CL8
6	87419583	AR	CABLE, Ballast to Rear Harness
7	86625256	8	WASHER, M12 x 28.5 x 4, HT,
8	86500689	4	NUT, M10, Cl 10, M10, CL10
9	719618003	1	KIT, FIP, H.I.D., Rear Flood
10	719702013	1	KIT, FIP, H.I.D., Rear Trap

04 -13 LAMPS - REAR FRAME AND FIELD

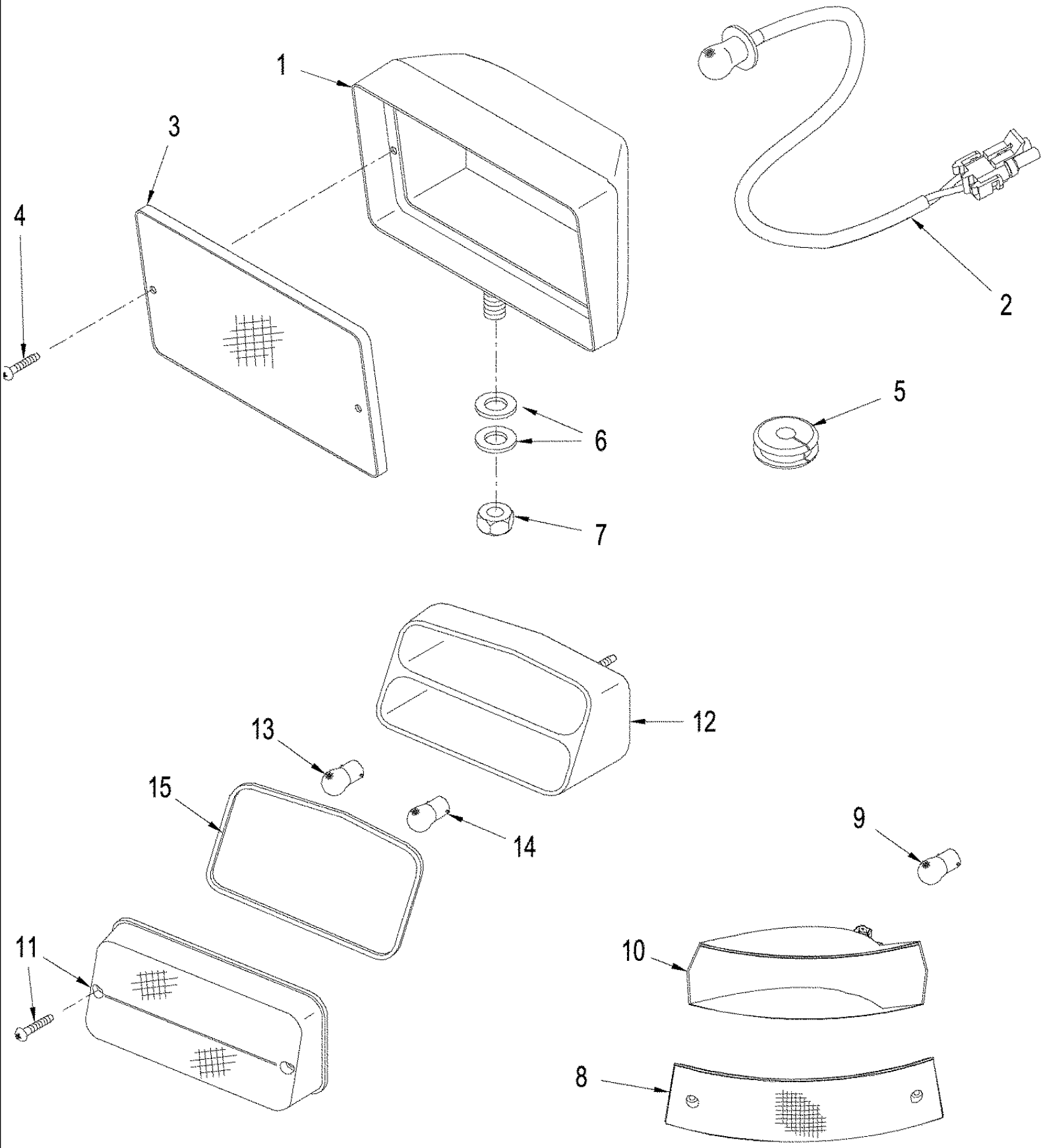

04 -13 LAMPS - REAR FRAME AND FIELD

ссылка	Номер детали	Кол-во	Описание
	92269C1	2	LAMP, WORK, Inc. 1 - 4
1	1964806C1	1	BEZEL,
2	1312210C2	1	BULB, 12V, 55W
3	276498A1	1	LENS,
4	86637784	2	SCREW, SELF TAPPING, Cross Pan Hd, #6 x 3/4", No. 6 x 3/4
5	86637782	2	GROMMET, 3/8" ID x 1" Groove Dia, Str Cut, 1
6	86625256	2	WASHER, M12 x 28.5 x 4, HT,
7	86500689	2	NUT, M10, Cl 10, M10; 10.9
	320246A1	4	LAMP, Warning / Hazard, Inc. 8 - 10
10	183748A1	1	LENS, Amber
11	529068	1	BULB, #1156, 12V,
12	NSS	1	NOT SERVICED SEPARATELY, Housing
	82026300	1	LAMP, TAIL, Rear Frame, Right Hand, Red / Amber, Inc. 11 - 15
	82026301	1	LAMP, TAIL, Rear Frame, Left Hand, Red / Amber, Inc. 11 -15
11	87357815	1	LENS, LH, Red / Amber
11	87357816	1	LENS, RH, Red / Amber
12	14148090	1	BULB, Housing, Lamp
13	14148190	1	BULB, 12V-21W
14	14144690	1	BULB, 12V-21 / 5W, 2 Filament
15	87357827	1	GASKET, Rear Lamp

04 -14 HEADLAMPS

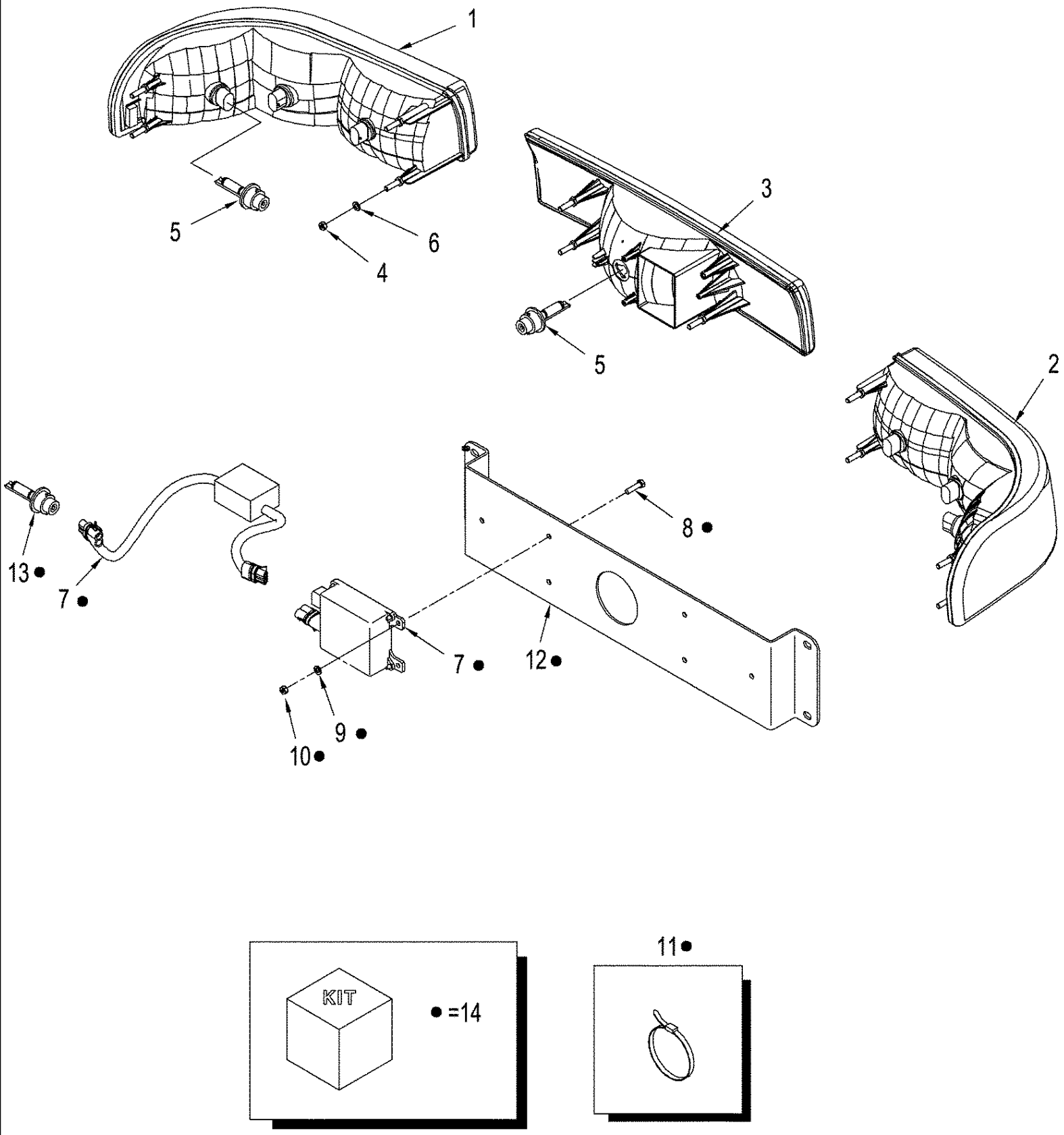

TJ375 TRACTOR - Electrical System

04 -14 HEADLAMPS

ссылка	Номер детали	Кол-во	Описание
1	395574A1	1	HEADLAMP, LH, Hi / Low, Road & Work Lamp, Front Grille, Inc. 5
2	395573A1	1	HEADLAMP, RH, Hi / Low, Road & Work Lamp, Front Grille, Inc. 5
3	395576A1	1	HEADLAMP, Center, Halogen
3	395577A1	1	HEADLAMP, Center, High Intensity Discharge (H.I.D)
4	86500688	10	NUT, M6, Cl 10,
5	323093A1	AR	BULB, 885-12V, Worklight / Headlamp
6	86517328	10	WASHER, LOCK, M6,
7	87427690	2	Ballast, Front Jumper, RH & LH Lamps
8	120098	AR	BOLT, Hex, M5 x 20, 8.8, Full Thd,
9	9824326	AR	WASHER, M5,
10	86639241	AR	NUT, LOCK, M5 x .8, Cl 8, M5, CL8
11	435437A1	4	STRAP, CABLE, Cable
12	87433036	1	BRACKET, Ballest, H.I.D.
13	87427689	2	BULB, H.I.D. w/ Harness
14	719619003	1	KIT, FIP, H.I.D. Lights, Front Corner

TJ375 TRACTOR - Electrical System

04 -15 BATTERIES, BSN RVS002701

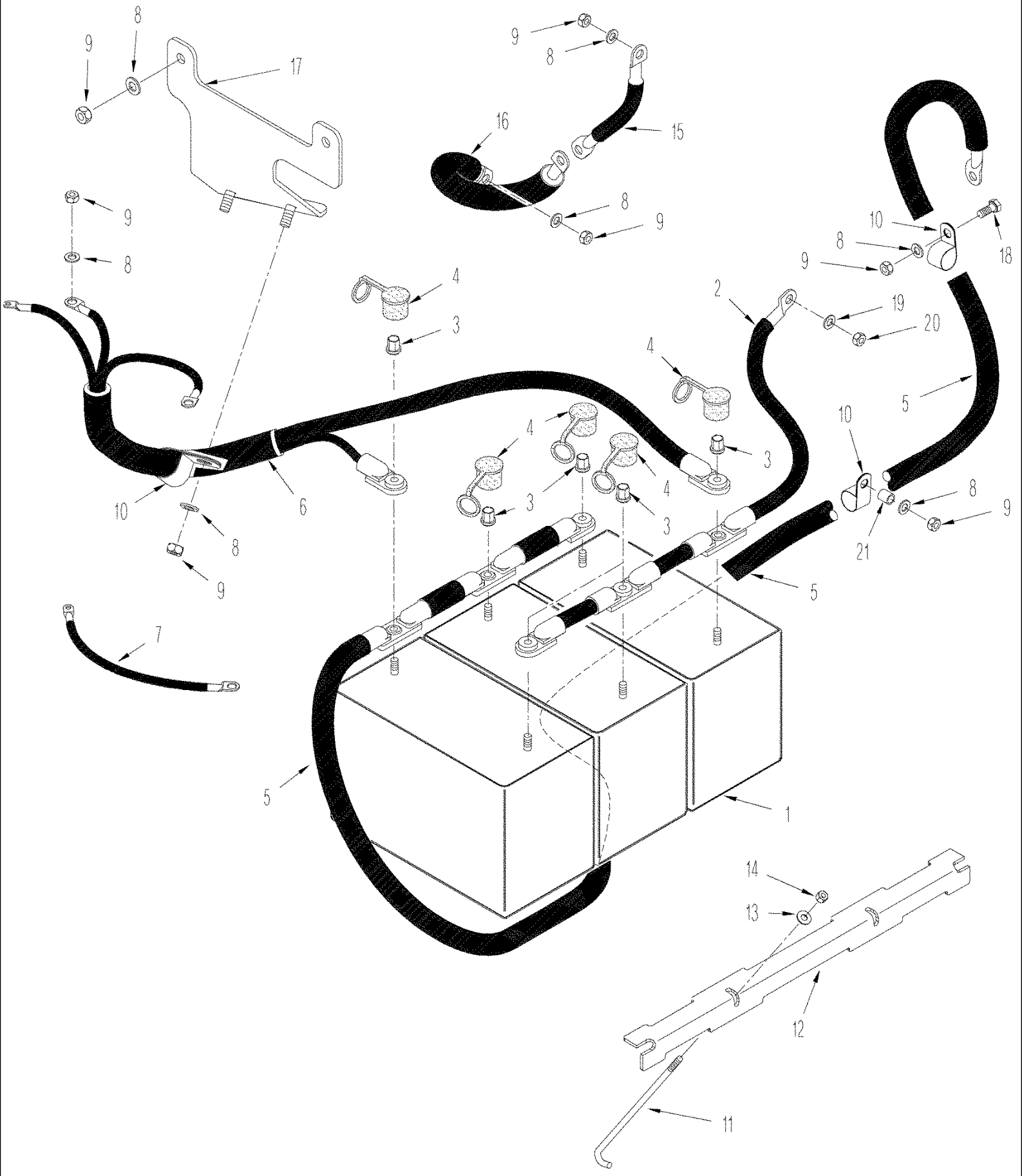

TJ375 TRACTOR - Electrical System

04 -15 BATTERIES, BSN RVS002701

ссылка	Номер детали	Кол-во	Описание
1	F775DS	3	BATTERY, DRY, 1000 CCA, U.S. Only
1	9624466DS	3	BATTERY, DRY, 1000 CCA, Canada Only
2	366724A1	1	CABLE, Ground, Inc. 3, 4
3	86518734	3	NUT, 3/8"-16, for Battery Stud
4	NSS	3	NOT SERVICED SEPARATELY, Cap
5	366725A2	1	CABLE, Positive, Inc. 3, 4
6	361988A3	1	HARNESS, Cab Power, Inc. 3, 4
7	364590A1	1	CABLE, Circuit Breaker
8	86624176	7	WASHER, M10 x 20 x 2, M10
9	86500689	7	NUT, M10, Cl 10, M10; 10.9
10	86625037	3	CLAMP, 15/16", Insul, 1/2" Bolt, 15/16 in ID
11	76082209	2	ROD,
12	366892A2	1	HOLDER,
13	86625263	2	WASHER, M8 x 20 x 1.6,
14	86528579	2	NUT, LOCK, M8 x 1.25, Cl 10,
15	442762A1	1	CABLE, Engine Ground
16	364591A1	1	CABLE, Chasis Ground
17	365035A5	1	BRACKET,
18	9846677	2	BOLT, Hex, M10 x 25, 10.9, Full Thd, Cap, HH, CL 10.9, M10 x 1.5 x 25
19	86625255	1	WASHER, M13.5 x 24.5 x 3, HT,
20	337475	1	NUT, M12, Cl 10,
21	432444A1	1	SPACER,

TJ375 TRACTOR - Electrical System

04 -16 BATTERIES, ASN RVS002701

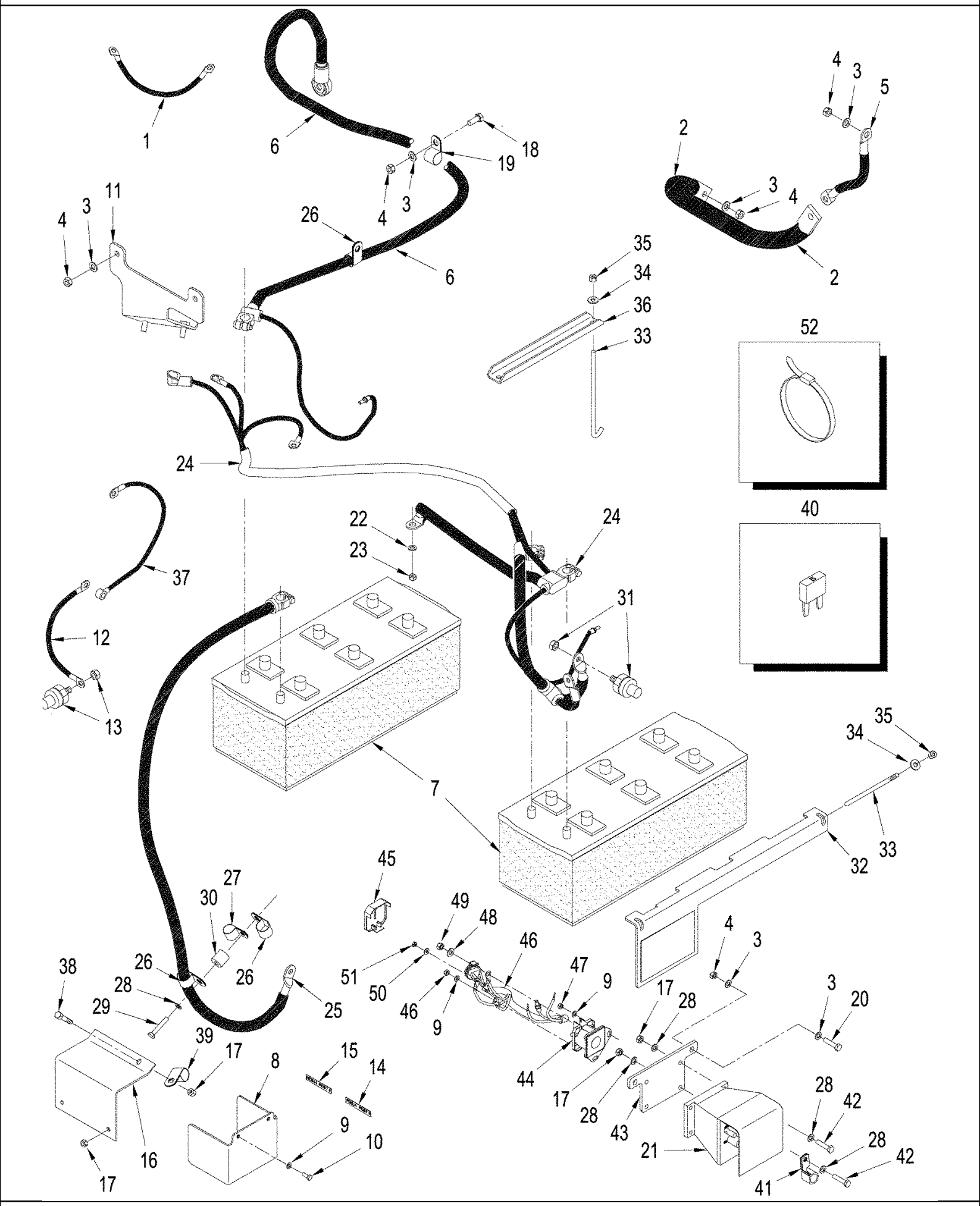

TJ375 TRACTOR - Electrical System

04 -16 BATTERIES, ASN RVS002701

ссылка	Номер детали	Кол-во	Описание
1	364590A1	1	CABLE, Circuit Breaker
2	364591A1	1	CABLE, Ground, Starter to Chasis
3	86511323	10	WASHER, M10 x 20 x 2, 11 x 20 x 2,0 mm
4	86500689	8	NUT, M10, Cl 10, M10, CL10
5	442762A1	1	CABLE, Starter to Engine
6	87437247	1	CABLE, Starter, 24V
7	F925DSW	2	BATTERY, WET, 1000 cca, for purchase in the United States
7	9673907WDS	2	BATTERY, WET, 1000 cca, for purchase in Canada
8	87437207	1	SHIELD, Relay
9	9824259	4	WASHER, M6 x 12 x 1.6,
10	86639037	2	BOLT, Hex, M6 x 16, 10.9, Cap, HH, M6 x 16, CL10.9
11	365035A5	1	BRACKET, Cab Harness
12	87426208	1	CABLE, Ground, Jump Start, 24V
13	NSS	1	NOT SERVICED SEPARATELY, Terminal, Jump Start
14	87427096	1	DECAL, Charging Post
15	87427317	1	DECAL, Negative (-) Post
16	87413792	1	SHIELD, Battery Terminals
17	43362	6	NUT, M8, Cl 10,
18	9846677	2	BOLT, Hex, M10 x 25, 10.9, Full Thd, Cap, HH, M10 x 25, CL10.9
19	86625037	2	CLAMP, 15/16", Insul, 1/2" Bolt,
20	9515003	2	BOLT, Hex, M10 x 30, 10.9, Full Thd,
21	80389120	1	SWITCH, ASSY, Relay, Inc. 40
22	86624177	1	WASHER, M12 x 24 x 2.5, 13,5 x 24 x 2,5 mm
23	337475	1	NUT, M12, Cl 10,
24	87437249	1	CABLE, Ground, 12V
25	87418058	1	CABLE, Ground, 24V
26	86625038	3	CLAMP, 1", Insul, 1/2" Bolt,
27	515-24222	1	CLAMP, 7/8", Insul, 7/16" Bolt,
28	86511315	11	WASHER, M8 x 16 x 1.6,
29	86639210	1	BOLT, Hex, M8 x 45, 10.9, M8 x 45, CL10.9
30	8500571	1	SPACER,
31	582785C91	1	CONNECTOR, TERMINAL, Jump Start
32	87425760	1	PLATE, Battery Hold Down, Side
33	87413678	2	ROD, Battery Hold Down
34	896-15008	4	WASHER, M8 x 21.5 x 2.5, HT, 9 x 21 x 2,5 mm
35	412250	4	NUT, LOCK, M8 x 1.25, Cl 8,
36	87413679	1	CHANNEL, Battery Hold Down, Center
37	87437248	1	CABLE, Relay, Chasis Ground
38	43228	1	BOLT, Hex, M6 x 80, 10.9, Cap, HH, M8 x 20, CL10.9
39	86639011	1	CLAMP, J, 3/4", Insul, 3/8" Bolt, 19mm
40	420580	2	PLATE,
41	R43926	1	CLAMP, 90 Twist
42	86639039	4	BOLT, M8 x 35, CL10.9
43	87417495	1	PLATE, Mounting
44	183038A1	1	SWITCH, SOLENOID, Switch, w/ Barrier

04 -16 BATTERIES, ASN RVS002701

ссылка	Номер детали	Кол-во	Описание
45	178148A1	1	COVER,
46	87417510	1	HARNESS, Relay 12 / 24V
47	86500688	2	NUT, M6, Cl 10,
48	87362	2	WASHER, 5/16" SAE,
49	9635082	2	NUT, 5/16"-18, G5,
50	88612	1	WASHER, #10,
51	87825	1	NUT, #10-32,
52	435437A1	1	STRAP, CABLE, Cable, 7-1/4"

04 -17 PANEL, CONTROL - COMPONENTS, BSN RVS003801

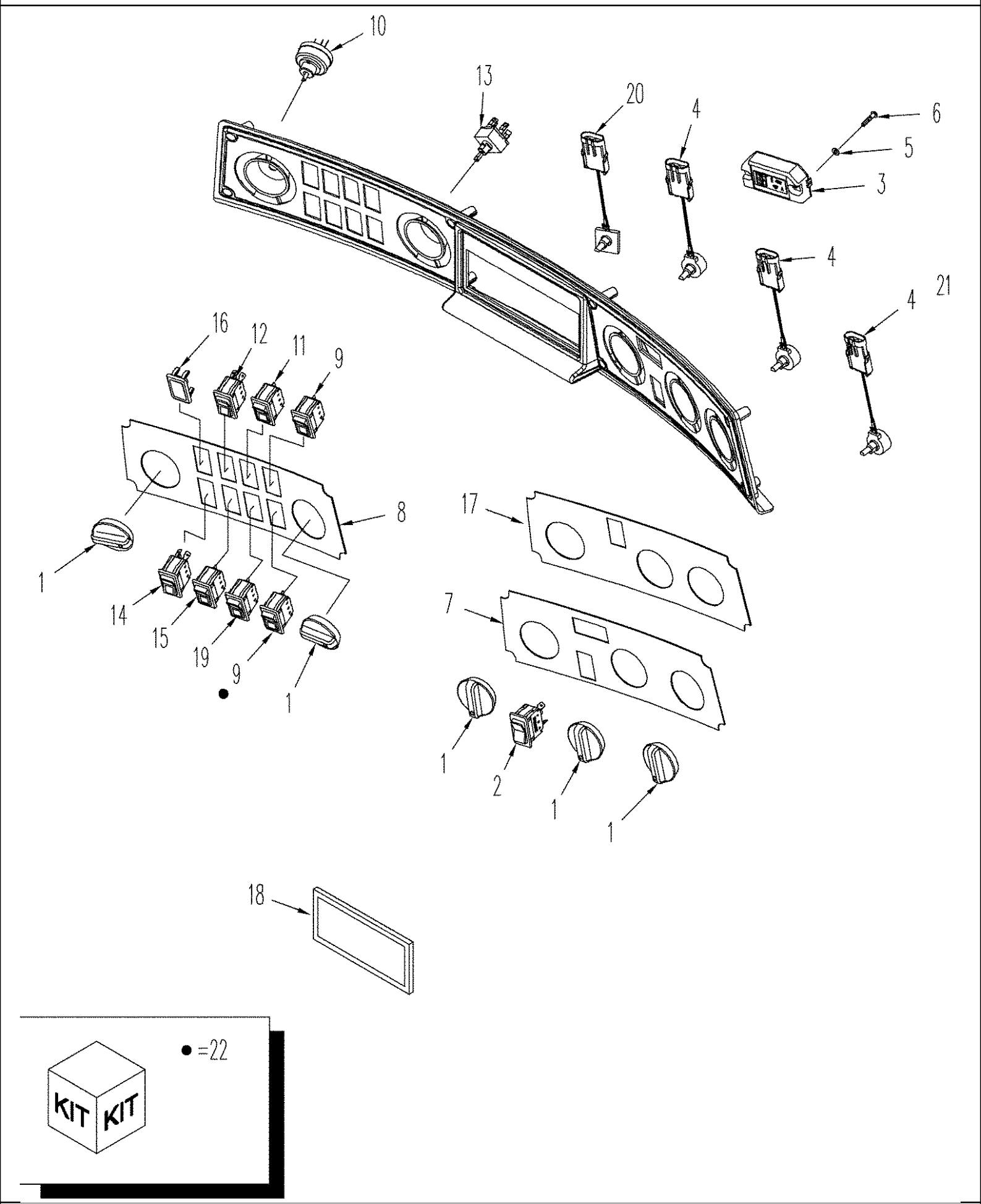

04 -17 PANEL, CONTROL - COMPONENTS, BSN RVS003801

ссылка	Номер детали	Кол-во	Описание
1	1331046C2	5	CAP, WASHER,
2	255036A1	1	SWITCH, , Without Automatic Temperature Control
2	295011A1	1	SWITCH, , With Automatic Temperature Control
3	308910A2	1	DISPLAY, Automatic Temperature Control, Deluxe Cab
4	418107A1	AR	POTENTIOMETER,
5	86624179	2	WASHER, M4, 4.3 x 9 x 0.8 mm
6	86639118	2	SCREW, SELF TAPPING, Pan Hd, M4.2 x 19, Pan Hd
7	308647A4	1	DECAL, Climate Control, See Figure(s) : 9-57, Deluxe Cab, With Automatic Temperature Control
8	431230A1	1	DECAL, Light Panel, See Figures(s) : 9-57
9	356885A1	2	SWITCH, Lower/Rear Wiper
10	177250A1	1	SWITCH, LIGHTS, Rotary
11	430893A1	1	SWITCH, Cruise Control, BSN RVS002701
11	86989955	1	SWITCH, Cruise Control, ASN RVS002701
12	229379A1	1	SWITCH, Strobe Lamp
13	345262A1	1	SWITCH, Wiper
14	229372A1	1	SWITCH, LIGHTS, Road Lamp
15	330116A1	1	SWITCH, Auxiliary Power
16	86000535	3	PLUG, 1.427" x .62", Plastic,
17	308646A4	1	DECAL, Climate Control, See Figure(s) : 9-57, Standard Cab, Without Automatic Temperature Control
18	1535219C1	1	COVER, , Without Radio
19	430894A1	1	SWITCH, Cruise Control, Increase/Decrease
20	92100C2	1	SWITCH, Blower Motor, Without Automatic Temperature Control
21	345439A1	1	POTENTIOMETER, Vent Motor, Without Automatic Temperature Control
22	719518003	1	KIT, Rear Wiper / Washer, See Figure(s) : 04-02, 04-03

04 -17(01) PANEL, CONTROL - COMPONENTS, ASN RVS003801

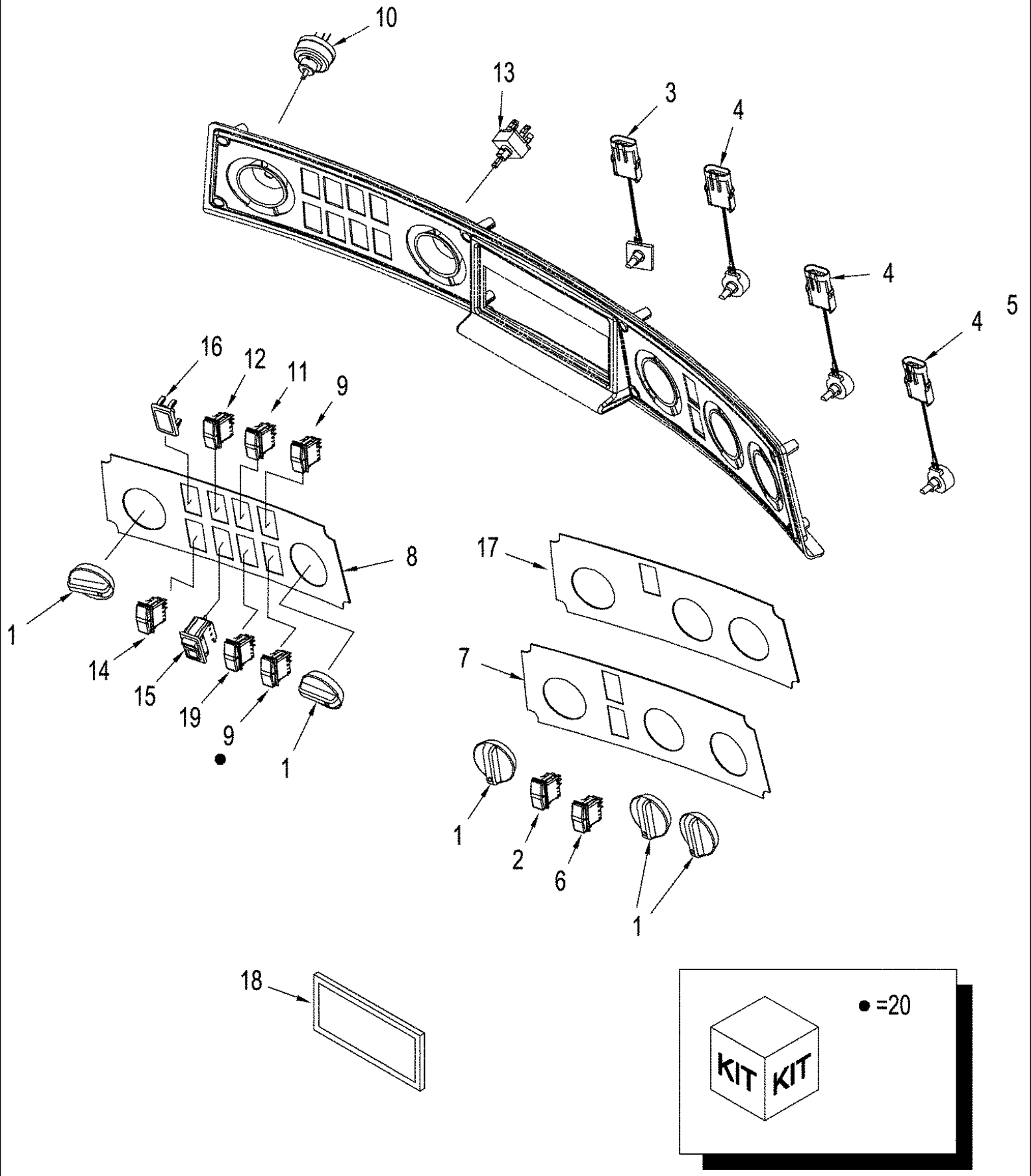

04 -17(01) PANEL, CONTROL - COMPONENTS, ASN RVS003801

ссылка	Номер детали	Кол-во	Описание
1	1331046C2	5	CAP, WASHER,
2	87405636	1	SWITCH, Climate Control, Without Automatic Temperature Control
2	87454558	1	SWITCH, Climate Control, With Automatic Temperature Control
3	92100C2	1	SWITCH, Blower Motor, Without Automatic Temperature Control
4	418107A1	AR	POTENTIOMETER,
5	345439A1	1	POTENTIOMETER, Vent Motor, Without Automatic Temperature Control
6	87305994	1	SWITCH, Defog
7	87450974	1	DECAL, Climate Control, See Figure(s) : 9-57, Deluxe Cab, With Automatic Temperature Control
8	431230A1	1	DECAL, Light Panel, See Figures(s) : 9-57
9	86989939	2	SWITCH, WINDSHIELD WIPER, Lower/Rear Wiper
10	177250A1	1	SWITCH, LIGHTS, Rotary
11	86989955	1	SWITCH, Cruise Control, ASN RVS002701
12	87414325	1	SWITCH, Strobe Lamp
13	345262A1	1	SWITCH, Front Washer / Wiper
14	87442098	1	SWITCH, LIGHTS, Road Lamp / Flasher
15	330116A1	1	SWITCH, Auxiliary Power
16	86000535	3	PLUG, 1.427" x .62", Plastic,
17	87450973	1	DECAL, Climate Control, See Figure(s) : 9-57, Standard Cab, Without Automatic Temperature Control
18	1535219C1	1	COVER, , Without Radio
19	86989953	1	SWITCH, Cruise Control, Increase/Decrease
20	719518003	1	KIT, Rear Wiper / Washer, See Figure(s) : 04-02, 04-03

04 -18 HARNESS - TRANSMISSION

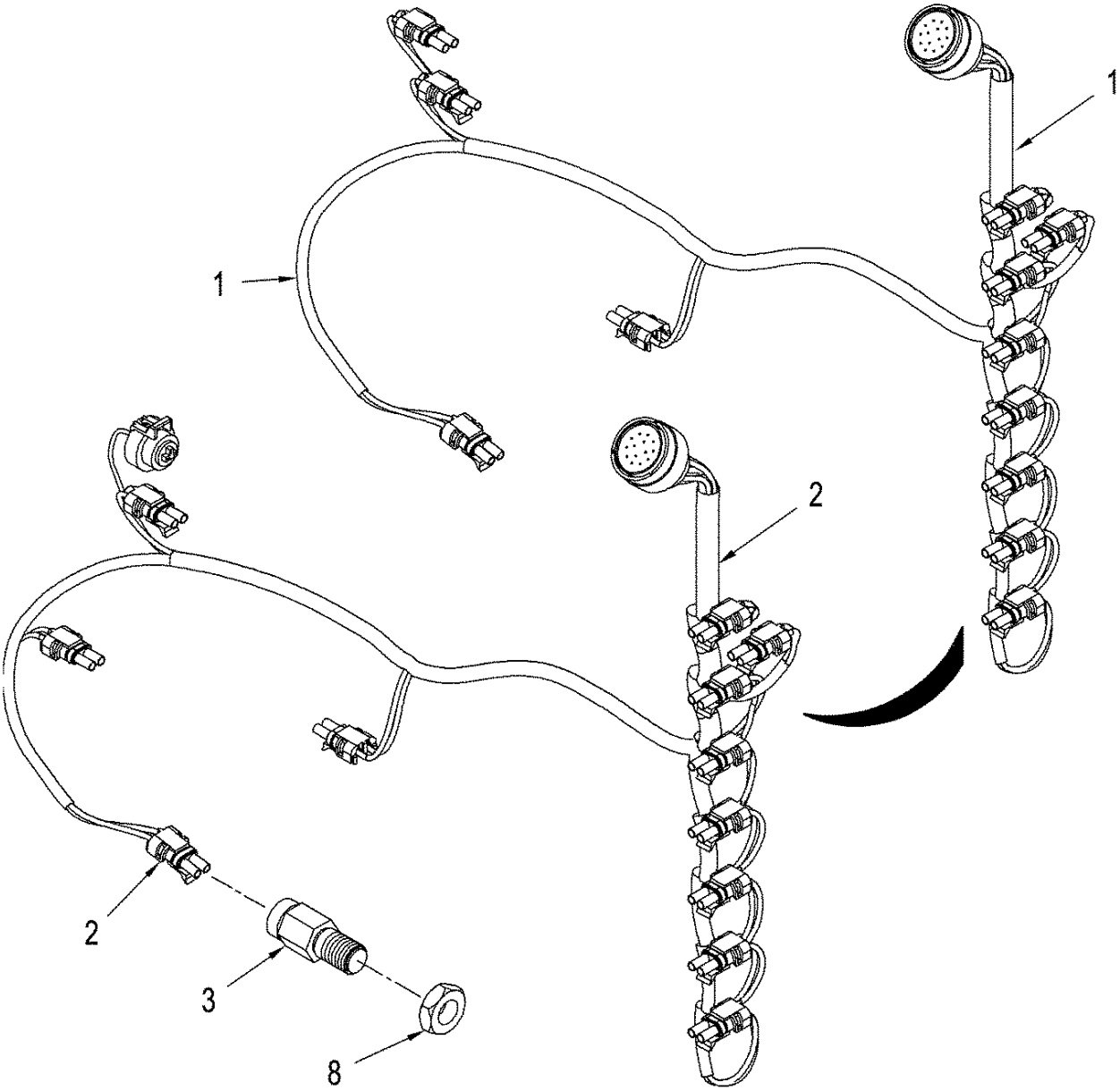

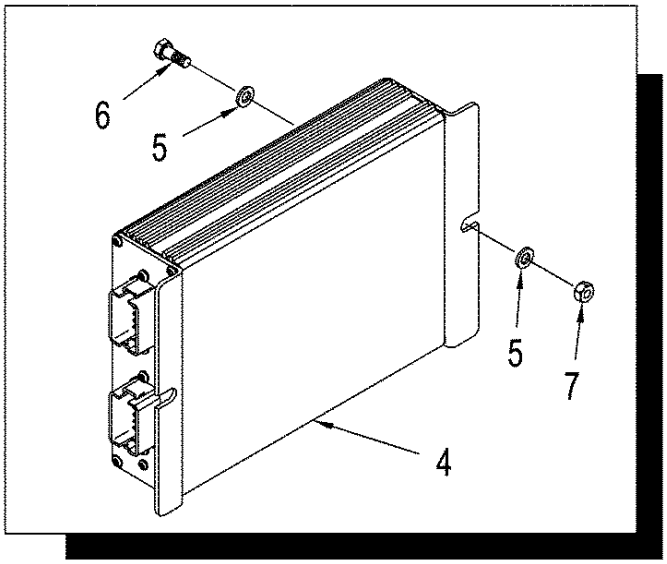

TJ375 TRACTOR - Electrical System

04 -18 HARNESS - TRANSMISSION

ссылка	Номер детали	Кол-во	Описание
1	403755A1	1	HARNESS, , BSN RVS002701
2	87417513	1	HARNESS, , ASN RVS0020701
3	A186004	1	SENSOR, Engine Speed
4	391112A2	1	CONTROL UNIT, Transmission, Download Software for Module Assy. Processor from Service Tool.
5	86624184	2	WASHER, M8 x 16 x 1.6, 9 x 17 x 1.6 mm
6	43232	1	SCREW, M8 x 16; 10.9
7	43362	1	NUT, M8, Cl 10,
8	934120R1	1	NUT, Thin, M20 x 1.5, M20; 10

TJ375 TRACTOR - Electrical System

04 -19 LAMPS - MARKER

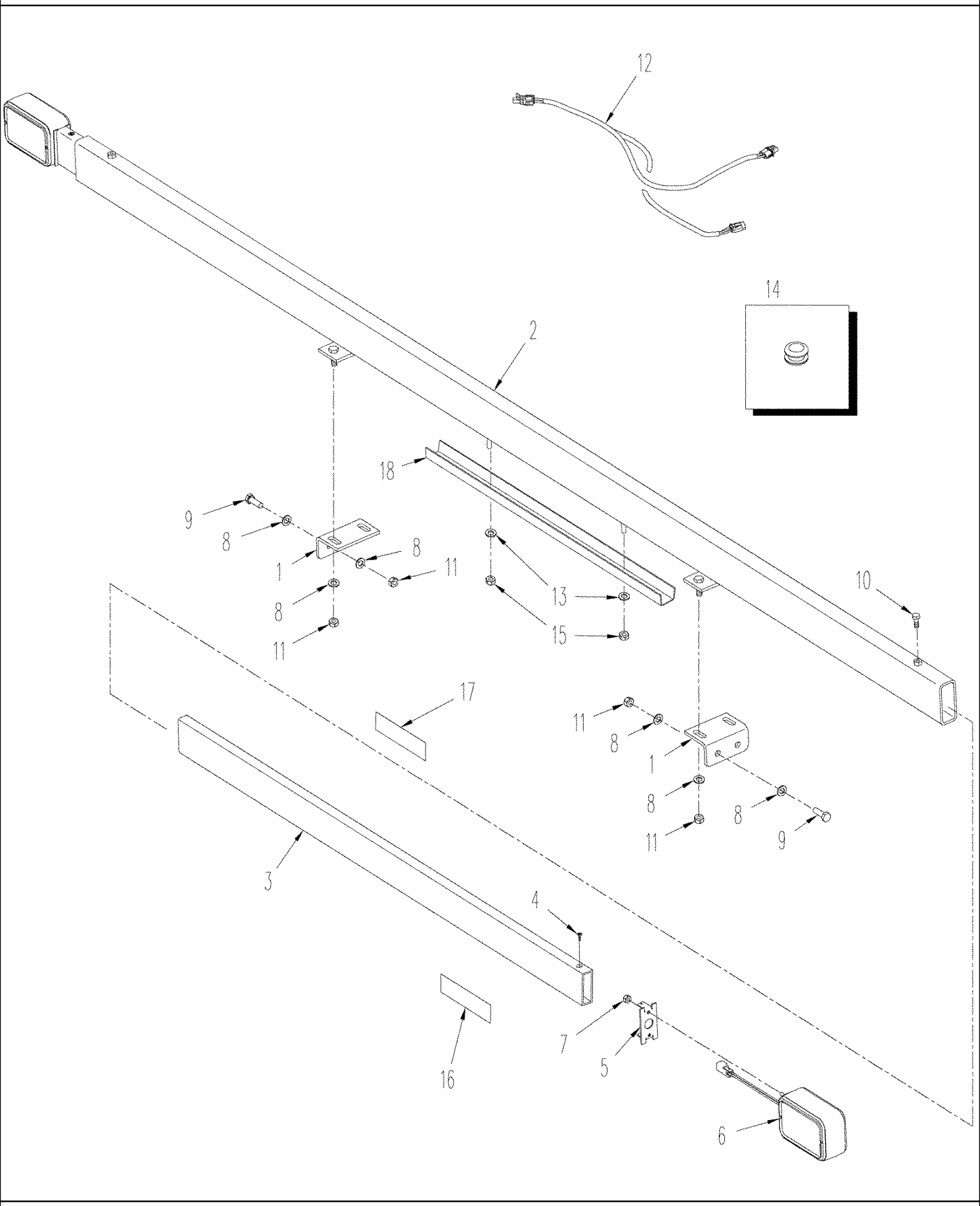

04 -19 LAMPS - MARKER

ссылка	Номер детали	Кол-во	Описание
1	402164A2	2	BRACKET,
2	402085A1	1	SUPPORT,
3	402090A1	1	TUBE,
4	86639265	2	SCREW, Hex Flat Hd, M5 x 12, 4.8, M5 x 12; 4.8
5	362496A1	1	BRACKET,
6	367321A1	1	LAMP, Warning, See Figure : 4-20
7	86509265	2	NUT, M5, Cl 10,
8	86624176	12	WASHER, M10 x 20 x 2, M10
9	9515003	4	BOLT, Hex, M10 x 30, 10.9, Full Thd,
10	43233	2	BOLT, Hex, M8 x 20, 10.9, Cap, HH, CL 10.9, M8 x 1.25 x 20
11	86500689	8	NUT, M10, Cl 10, M10; 10.9
12	366964A1	1	HARNESS, Marker Lights
13	86624184	2	WASHER, M8 x 16 x 1.6, 9 x 17 x 1,6 mm
14	86637782	2	GROMMET, 3/8" ID x 1" Groove Dia, Str Cut, Rubber, 1
15	86528579	2	NUT, LOCK, M8 x 1.25, Cl 10,
16	297221A1	4	DECAL, Red and Orange
17	297223A1	4	DECAL, Yellow
18	402168A1	1	CHANNEL,

04 -20 LAMPS - SIDE MARKER WARNING

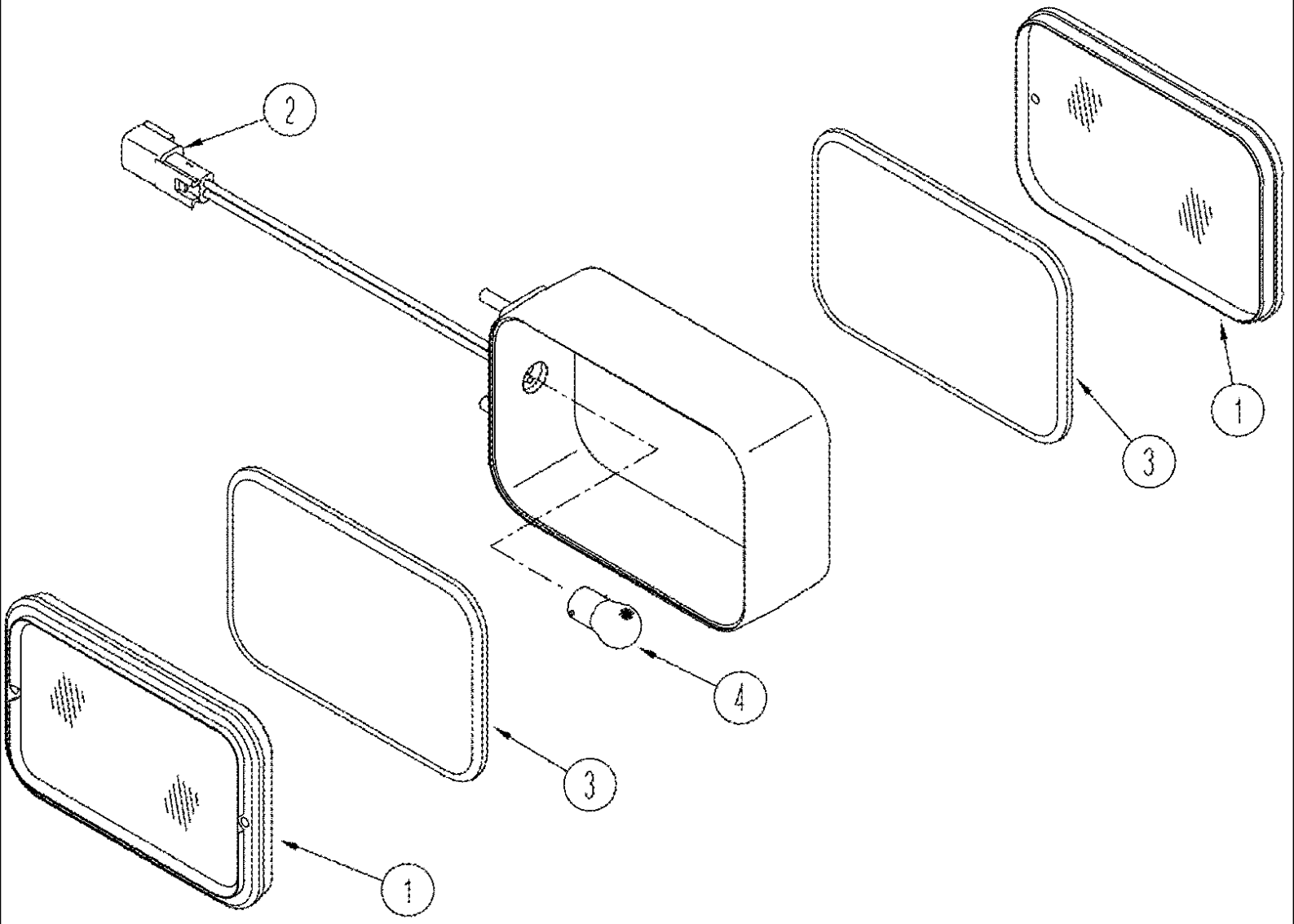

04 -20 LAMPS - SIDE MARKER WARNING

ссылка	Номер детали	Кол-во	Описание
	367321A1	1	LAMP, Warning, Inc. 1 - 4
1	232212A1	2	LENS, Amber
2	222136A1	1	CONNECTOR, ELEC,
3	233561A1	2	O-RING,
4	529068	1	BULB, #1156, 12V,

TJ375 TRACTOR - Electrical System

04 -21 HARNESS - FRONT FRAME, BSN RVS002701

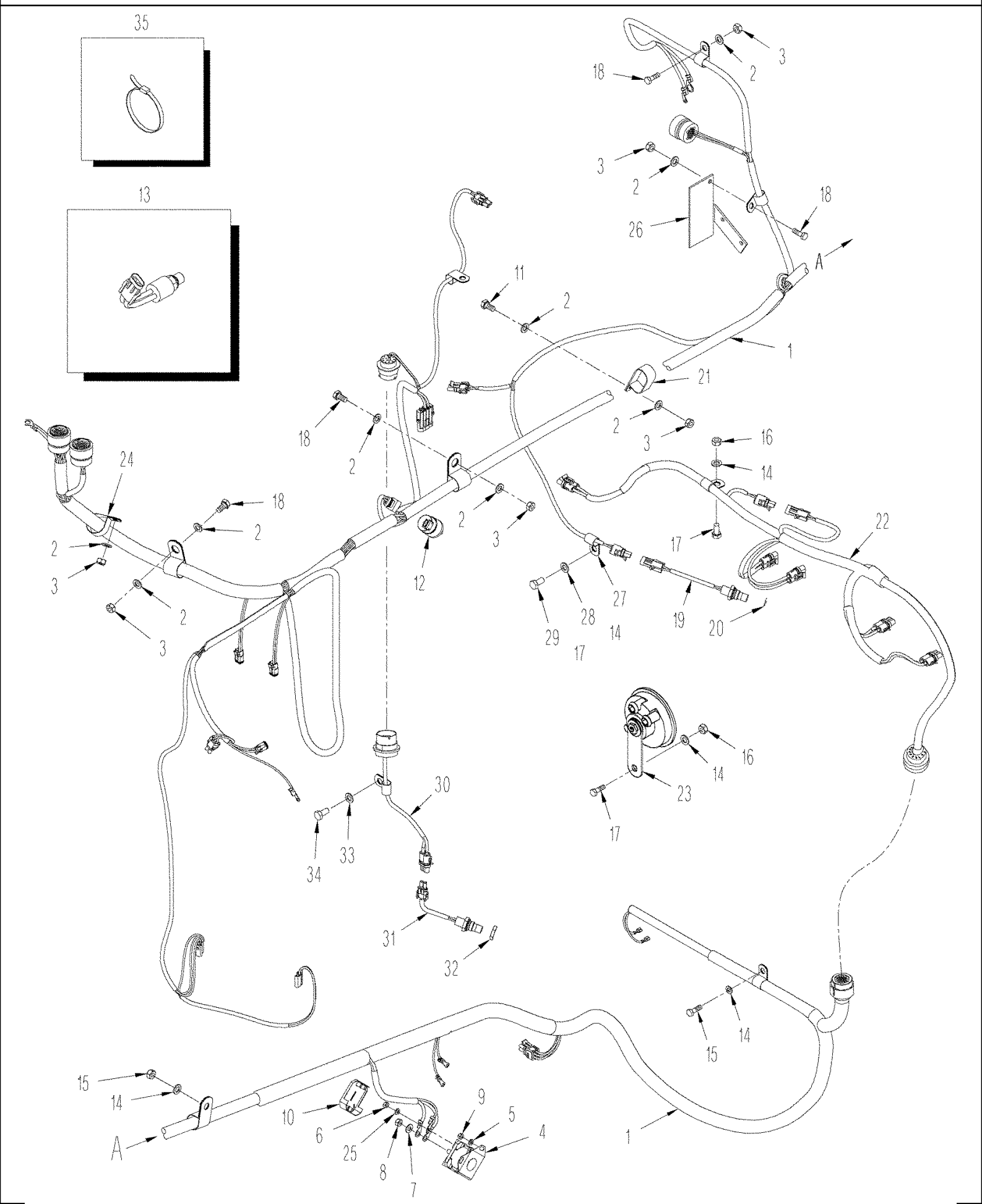

TJ375 TRACTOR - Electrical System

04 -21 HARNESS - FRONT FRAME, BSN RVS002701

ссылка	Номер детали	Кол-во	Описание
1	429733A2	1	HARNESS, Front Frame
2	86624176	23	WASHER, M10 x 20 x 2, M10
3	86500689	11	NUT, M10, Cl 10, M10; 10.9
4	183038A1	1	SWITCH, SOLENOID,
5	86624181	5	WASHER, M6, 6,6 x 12 x 1.6 mm
6	87825	1	NUT, #10-32,
7	87362	2	WASHER, 5/16" SAE,
8	9635082	2	NUT, 5/16"-18, G5,
9	86500688	2	NUT, M6, Cl 10,
10	178148A1	1	COVER,
11	43140	2	BOLT, Hex, M10 x 30, 8.8, Full Thd,
12	293797A1	1	SWITCH, Air Restriction
13	339529A1	1	SWITCH, Pressure, Park Brake
14	86624184	16	WASHER, M8 x 16 x 1.6, 9 x 17 x 1.6 mm
15	43127	3	BOLT, Hex, M8 x 25, 8.8,
16	43362	9	NUT, M8, Cl 10,
17	16043224	6	BOLT, Hex, M8 x 16, 8.8, Full Thd,
18	43139	6	SCREW, Cap, HH, CL 8.8, M10 x 1.5 x 25
19	330124A1	1	SWITCH, M18 orb x 1.5, Axle Lube, Includes : 20
20	86639043	1	O-RING, 15.3 ID x 2.2
21	L111928	5	CLAMP,
22	416125A2	1	HARNESS, WIRE, Light Bar
23	237582A1	1	HORN, FC9
24	86639006	1	CLAMP, 1 1/2", Insul, 1/2" Bolt,
25	88612	1	WASHER, #10,
26	411019A3	1	BRACKET, Air Intake
27	86639010	1	CLAMP, 3/8", Insul, 1/2" Bolt,
28	86625255	1	WASHER, M13.5 x 24.5 x 3, HT, , TJ375 Axle
29	388113	1	BOLT, Hex, M12 x 16, 8.8, Full Thd, M12 x 16; 8.8, TJ375 Axle
30	402200A2	1	HARNESS, Manual Transmission
31	A186004	1	SENSOR, Engine Speed
32	934120R1	1	NUT, Thin, M20 x 1.5, Jam, M20; 10
33	86625255	1	WASHER, M13.5 x 24.5 x 3, HT,
34	388113	1	BOLT, Hex, M12 x 16, 8.8, Full Thd, M12 x 16; 8.8
35	435437A1	3	STRAP, CABLE, Tie

04 -21(01) HARNESS - FRONT FRAME, ASN RVS002701

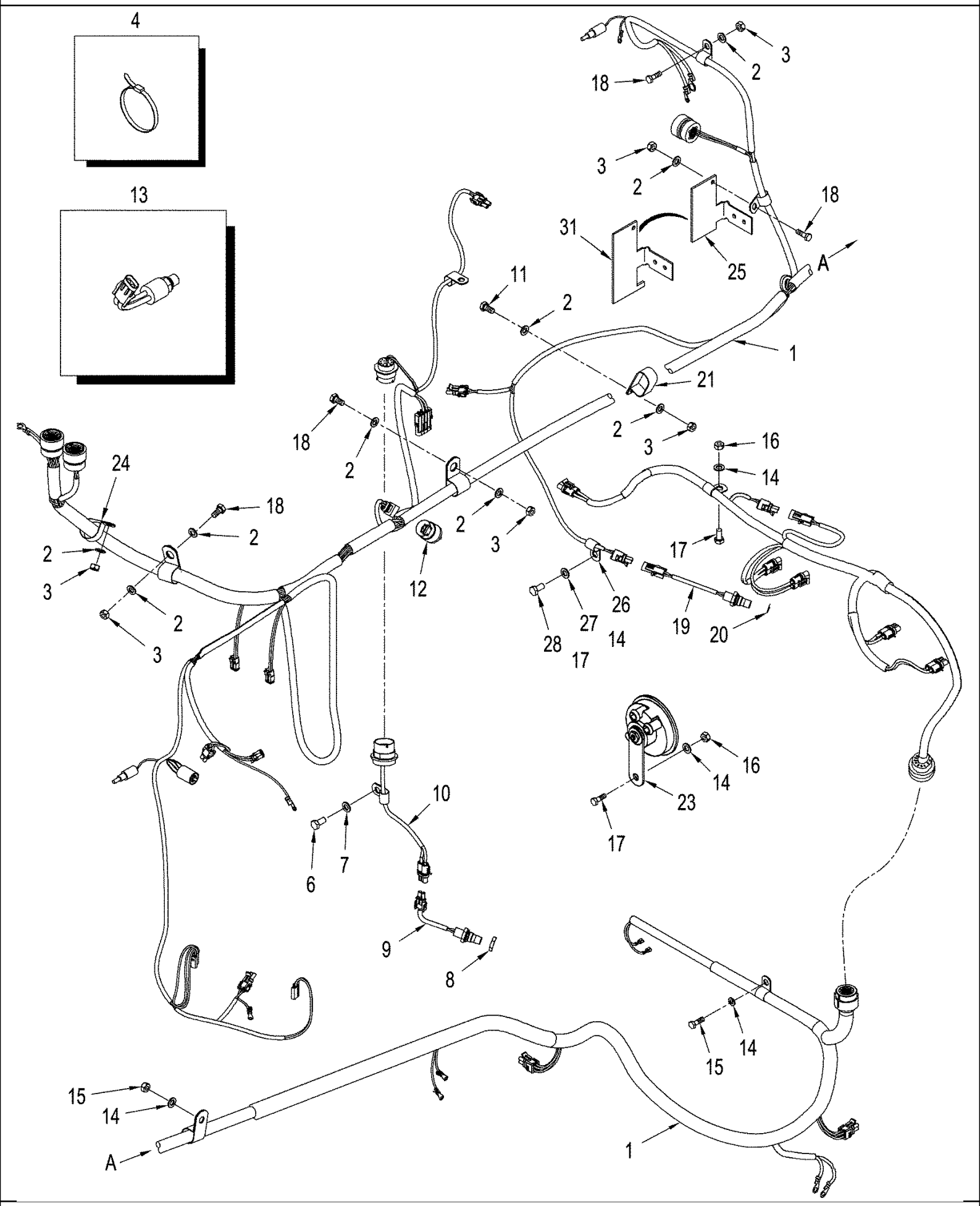

TJ375 TRACTOR - Electrical System

04 -21(01) HARNESS - FRONT FRAME, ASN RVS002701

ссылка	Номер детали	Кол-во	Описание
1	87417508	1	HARNESS, Front Frame, BSN RVS003801
1	87324034	1	HARNESS, WIRE, Front Frame, ASN RVS003801
2	86624176	23	WASHER, M10 x 20 x 2, M10
3	86500689	11	NUT, M10, Cl 10, M10; 10.9
4	435437A1	3	STRAP, CABLE, Tie
5	86624181	3	WASHER, M6, 6,6 x 12 x 1.6 mm
6	388113	1	BOLT, Hex, M12 x 16, 8.8, Full Thd, M12 x 16; 8.8
7	86625255	1	WASHER, M13.5 x 24.5 x 3, HT,
8	934120R1	1	NUT, Thin, M20 x 1.5, Jam, M20; 10
9	A186004	1	SENSOR, Engine Speed
10	402200A2	1	HARNESS, Manual Transmission
11	43140	2	BOLT, Hex, M10 x 30, 8.8, Full Thd,
12	293797A1	1	SWITCH, Air Restriction
13	339529A1	1	SWITCH, Pressure, Park Brake
14	86624184	16	WASHER, M8 x 16 x 1.6, 9 x 17 x 1.6 mm
15	43127	3	BOLT, Hex, M8 x 25, 8.8,
16	43362	9	NUT, M8, Cl 10,
17	16043224	6	BOLT, Hex, M8 x 16, 8.8, Full Thd,
18	43139	6	SCREW, Cap, HH, CL 8.8, M10 x 1.5 x 25
19	330124A1	1	SWITCH, M18 orb x 1.5, Axle Lube, Inc. 20
20	86639043	1	O-RING, 15.3 ID x 2.2
21	L111928	5	CLAMP,
22	416125A2	1	HARNESS, WIRE, Light Bar
23	237582A1	1	HORN, FC9
24	86639006	1	CLAMP, 1 1/2", Insul, 1/2" Bolt,
25	411019A3	1	BRACKET, Air Intake, BSN RVS003008
26	86639010	1	CLAMP, 3/8", Insul, 1/2" Bolt,
27	86625255	1	WASHER, M13.5 x 24.5 x 3, HT, , TJ375 Axle
28	388113	1	BOLT, Hex, M12 x 16, 8.8, Full Thd, M12 x 16; 8.8, TJ375 Axle
29	87305067	1	BRACKET, SUPPORTING,

04 -22 HARNESS, ENGINE, BSN RVS002701

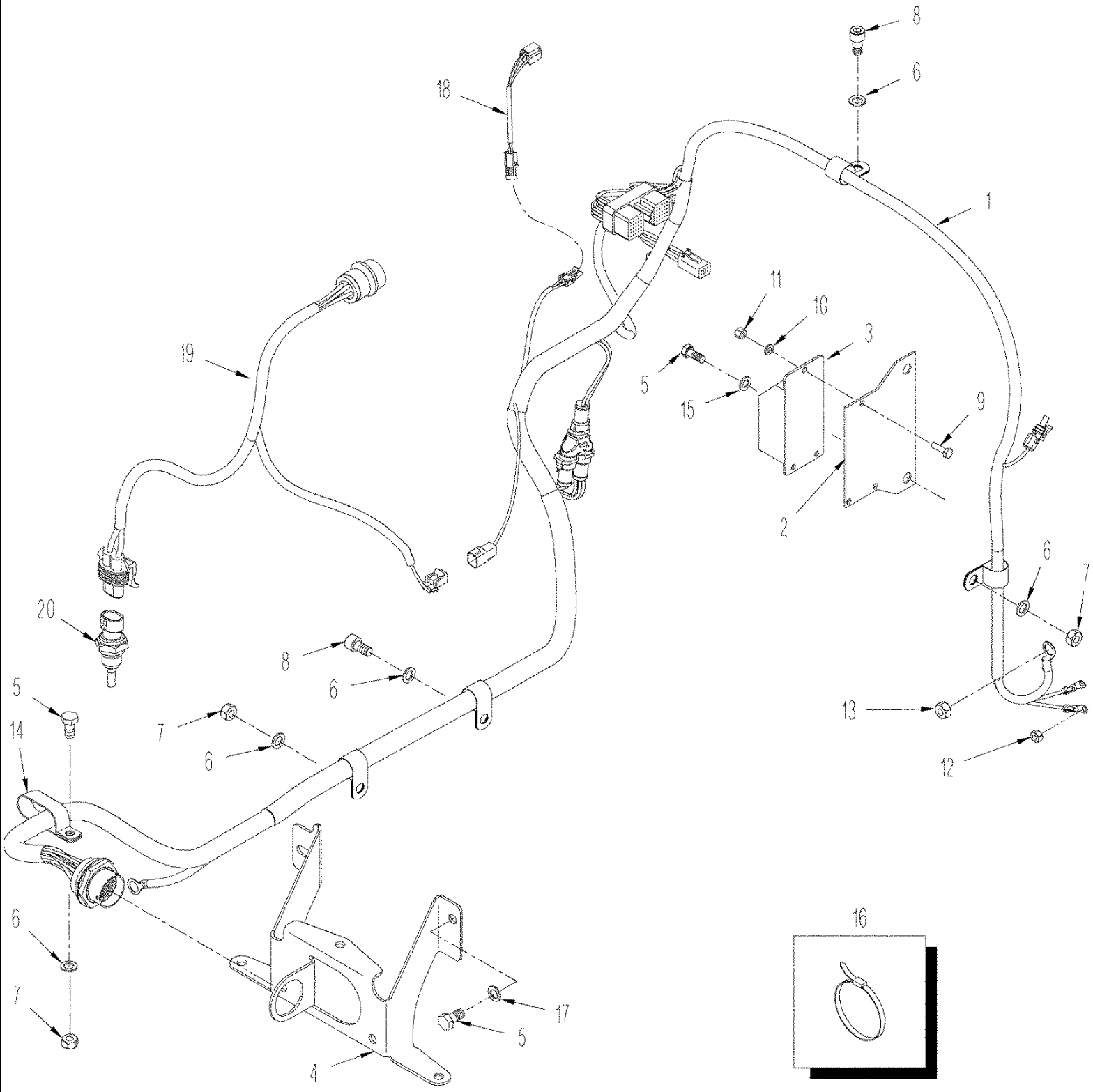

TJ375 TRACTOR - Electrical System

04 -22 HARNESS, ENGINE, BSN RVS002701

ссылка	Номер детали	Кол-во	Описание
1	429495A1	1	HARNESS,
2	429746A1	1	BRACKET,
3	397496A1	1	CONNECTOR, ELEC, Passive
4	348313A2	1	BRACKET,
5	43138	5	BOLT, Hex, M10 x 20, 8.8, Full Thd,
6	86625251	12	WASHER, M10 x 18 x 1.6, 11 x 18 x 1.6 mm
7	86500689	3	NUT, M10, Cl 10, M10; 10.9
8	86632600	4	SCREW, Hex Soc Hd, M10 x 20, 8.8, Socket, M10 x 20
9	120100	3	BOLT, Hex, M6 x 20, 8.8,
10	86624181	6	WASHER, M6, 6,6 x 12 x 1.6 mm
11	412250	3	NUT, LOCK, M8 x 1.25, Cl 8, M6
12	86625075	1	NUT, LOCK, M4 x .7, Cl 8, M4
13	86637736	1	NUT, LOCK, 7/16"-14, GB, 7/16
14	L111928	1	CLAMP,
15	435437A1	1	STRAP, CABLE, Tie
16	86624181	3	WASHER, M6, 6,6 x 12 x 1,6 mm
17	140028	2	WASHER, LOCK, M10,
18	358878A2	1	HARNESS, Ether Start
19	419418A1	1	HARNESS, Hydraulic Fan Drive, Used on TJ425 and TJ450
20	311620A1	1	SENSOR, Temperature
	365978A1	1	KIT, Ether Start, Inc. 18, See Figure(s) : 02-05

04 -22(01) HARNESS, ENGINE, ASN RVS002701

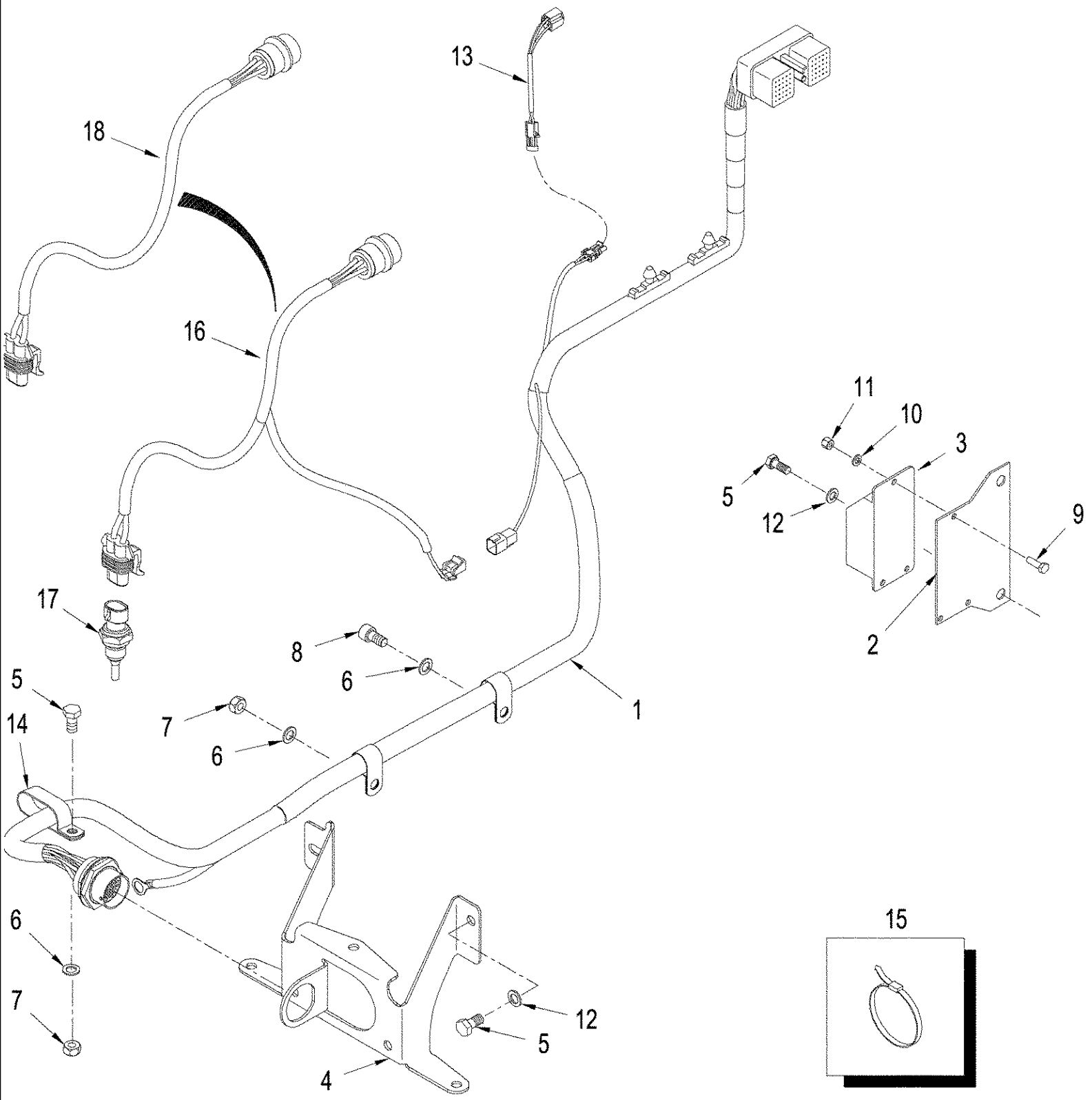

04 -22(01) HARNESS, ENGINE, ASN RVS002701

ссылка	Номер детали	Кол-во	Описание
1	87417509	1	HARNESS, Not Illustrated, BSN RVS003801
1	87310751	1	HARNESS, , ASN RSV003801
2	429746A1	1	BRACKET,
3	397496A1	1	CONNECTOR, ELEC, Passive
4	348313A2	1	BRACKET,
5	43138	5	BOLT, Hex, M10 x 20, 8.8, Full Thd,
6	86625251	9	WASHER, M10 x 18 x 1.6, 11 x 18 x 1.6 mm
7	86500689	2	NUT, M10, Cl 10, M10; 10.9
8	86632600	2	SCREW, Hex Soc Hd, M10 x 20, 8.8, Socket, M10 x 20
9	120100	3	BOLT, Hex, M6 x 20, 8.8,
10	86624181	3	WASHER, M6, 6,6 x 12 x 1.6 mm
11	412250	3	NUT, LOCK, M8 x 1.25, Cl 8, M6
12	140028	2	WASHER, LOCK, M10,
13	358878A2	1	HARNESS, Ether Start
14	L111928	1	CLAMP,
15	435437A1	1	STRAP, CABLE, Tie
16	419418A1	1	HARNESS, Hydraulic Fan Drive, Used on TJ425 and TJ450
17	311620A1	1	SENSOR, Temperature
18	87308658	1	HARNESS, Hydraulic Fan Drive
	365978A1	1	KIT, Ether Start, Inc. 18, See Figure(s) : 02-05

04 -23 HARNESS - MAIN CAB, STANDARD CAB

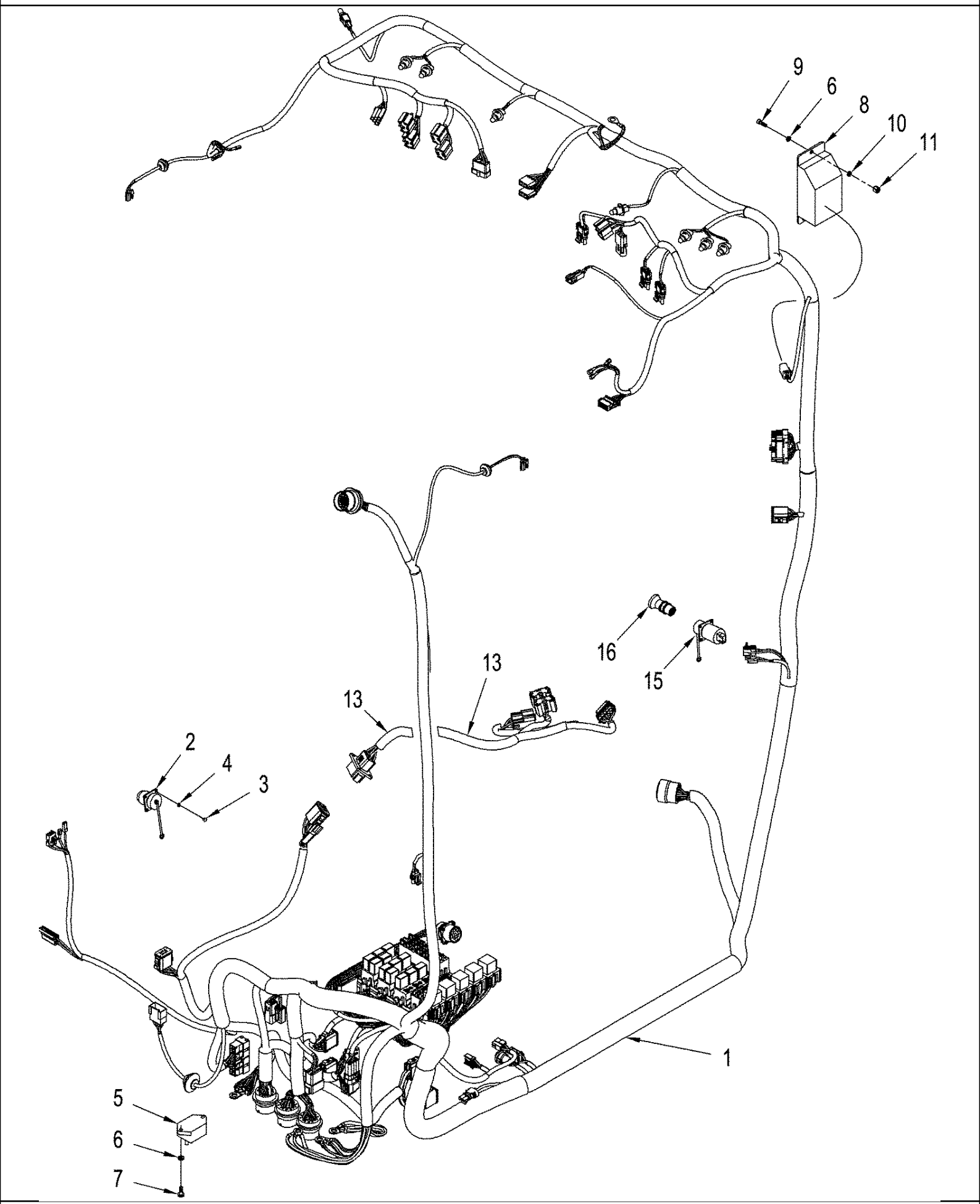

04 -23 HARNESS - MAIN CAB, STANDARD CAB

ссылка	Номер детали	Кол-во	Описание
	431610A2	1	MODULE, Electronics, Inc. 1, See Figure : 04-25, With Manual Shift Transmission, ASN RVS001307
	430654A2	1	HARNESS, Inc. 1, See Figure(s) : 04-25, With Manual Shift Transmission, BSN RVS001307
1	NSS	1	NOT SERVICED SEPARATELY, Harness, Main Cab
2	227739A2	1	CONNECTOR, ELEC, Power
3	383986A1	4	RIVET,
4	86639310	8	WASHER, M3,
5	435435A1	1	CIRCUIT BREAKER,
6	86624181	4	WASHER, M6, 6.6 x 12 x 1.6 mm
7	86511829	2	SCREW, Cross Pan Hd, M6 x 16,
8	397496A1	1	CONNECTOR, ELEC, Passive
9	86625218	2	SCREW, Hex Soc Hd, M6 x 20, 12.9, Socket, M6 x 20; 12.9
10	86517328	2	WASHER, LOCK, M6,
11	86500688	2	NUT, M6, Cl 10,
12	388811A1	1	LIGHTER, CIGARETTE, Not Illustrated
13	403757A1	1	HARNESS, , Without Arm Rest Unit
14	87452321	1	OUTLET, Power
15	388810A1	1	ELEMENT, Pop-Out Lighter, If Used

04 -24 HARNESS - MAIN CAB, DELUXE CAB

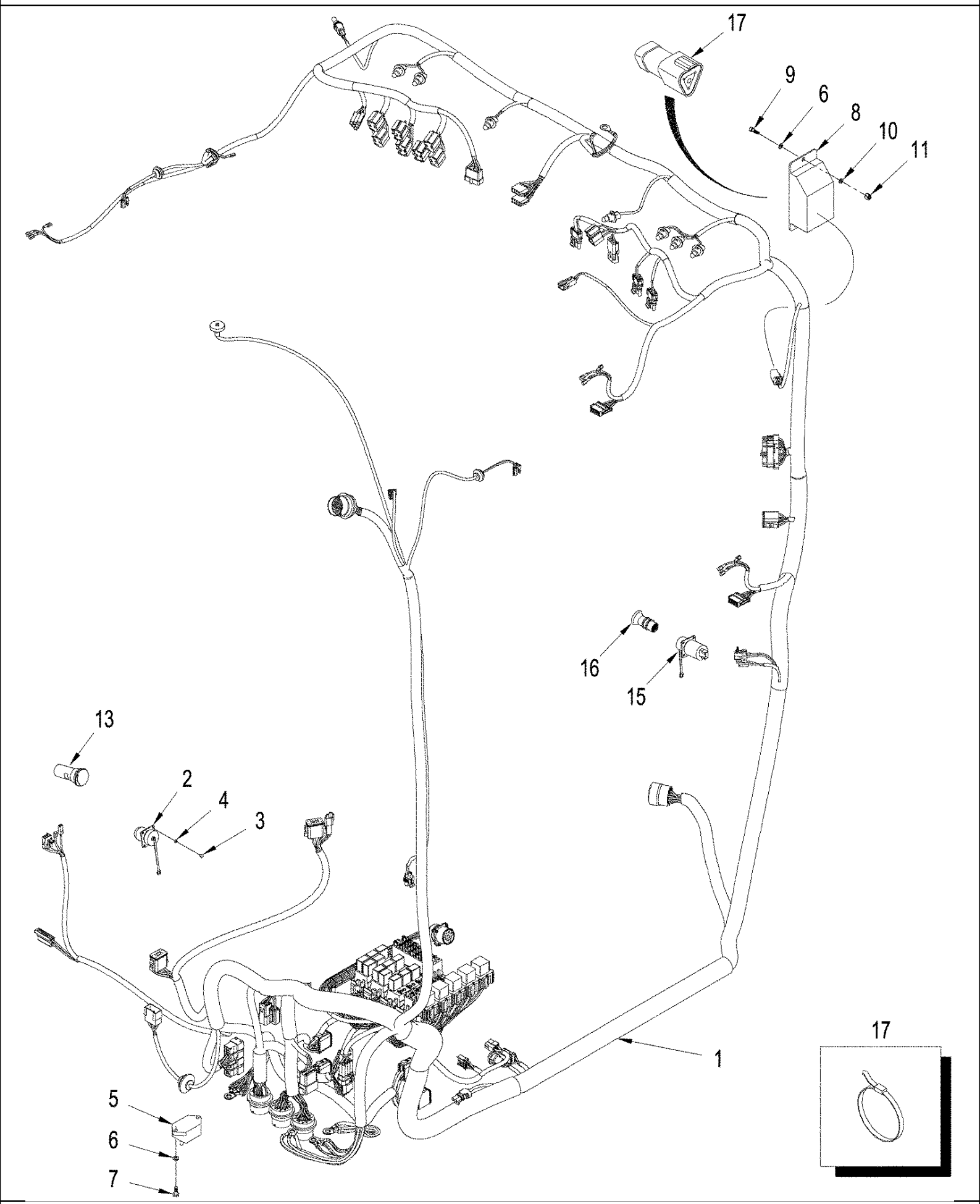

04 -24 HARNESS - MAIN CAB, DELUXE CAB

ссылка	Номер детали	Кол-во	Описание
	431500A2	1	MODULE, Electronic, Inc. 1, See Figure 04-25, With Manual Shift Transmission, BSN RVS003801
	87326446	1	BOARD, PRINTED CIRCUIT, Electronic, Inc. 1, See Figure: 04-25, With Manual Shift Transmission, ASN RVS003801
	87418384	1	MODULE, Electronic, Inc. 1, See Figure : 04-25, With Power Shift Transmission, BSN RVS003801
	87326440	1	BOARD, PRINTED CIRCUIT, Electronic, Inc. 1, See Figure: 04-25, With Power Shift Transmission, ASN RVS003801
1	NSS	1	NOT SERVICED SEPARATELY, Harness, Main Cab, With Power Shift Transmission, With Manual Shift Transmission
2	227739A2	3	CONNECTOR, ELEC, Power
3	383986A1	12	RIVET,
4	86639310	12	WASHER, M3,
5	435435A1	1	CIRCUIT BREAKER,
6	86624181	4	WASHER, M6, , BSN RVS003801
7	86511829	2	SCREW, Cross Pan Hd, M6 x 16,
8	397496A1	1	CONNECTOR, ELEC, Passive, BSN RVS003801
9	86625218	3	SCREW, Hex Soc Hd, M6 x 20, 12.9, , BSN RVS003801
10	86517328	3	WASHER, LOCK, M6, , BSN RVS003801
11	86500688	3	NUT, M6, Cl 10, , BSN RVS003801
12	388811A1	1	LIGHTER, CIGARETTE, Not Illustrated
13	388813A1	2	OUTLET, Power, Not Illustrated, If Used
14	279265A2	1	SWITCH, Differential Lock, Not Illustrated
15	87452321	1	OUTLET, Power
16	388810A1	1	ELEMENT, Pop-Out Lighter, If Used
17	84058092	1	CONNECTOR, TERMINAL, 120 Ohm Resistor,

04 -25 ELECTRONIC MODULE ASSY

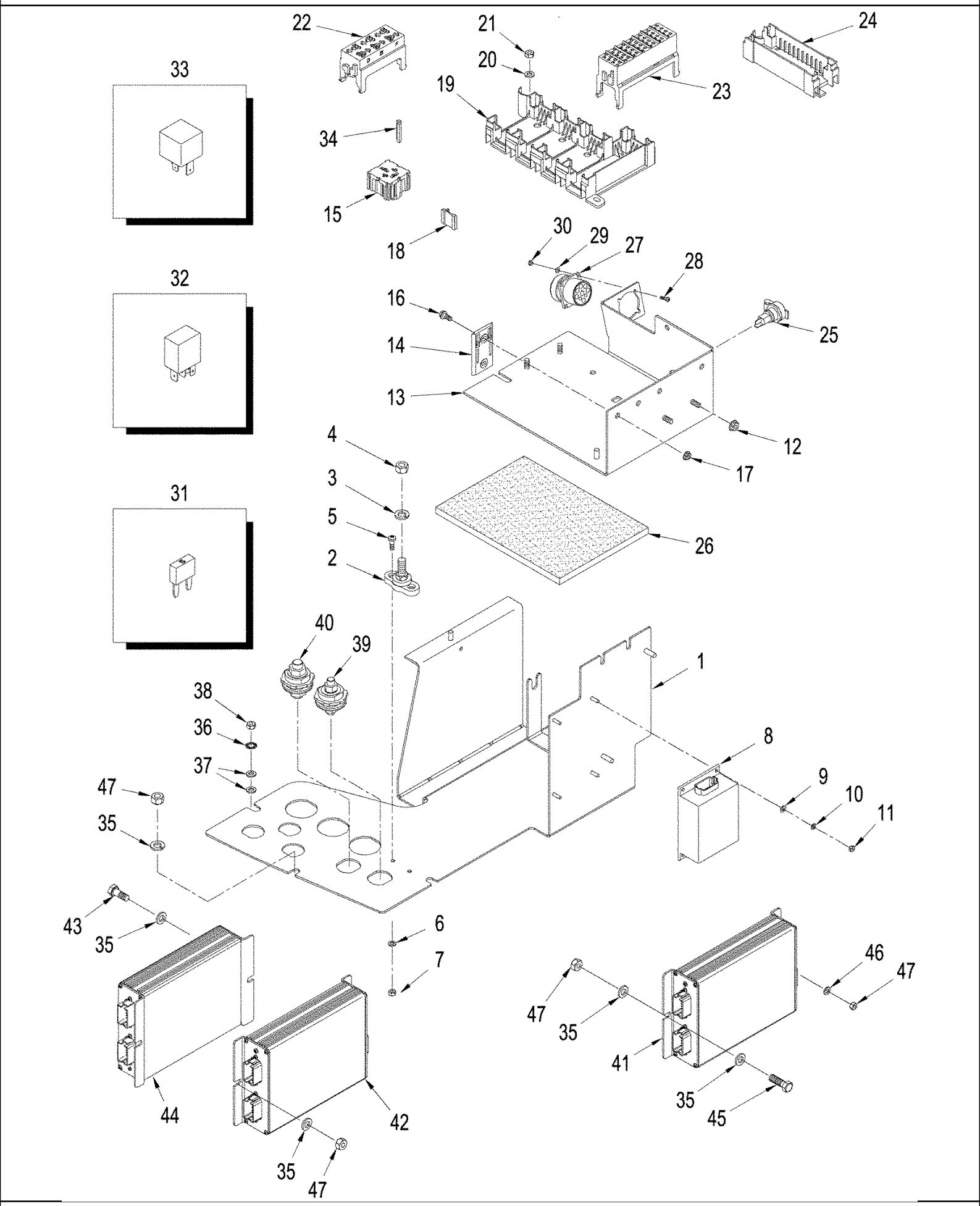

04 -25 ELECTRONIC MODULE ASSY

ссылка	Номер детали	Кол-во	Описание
1	388289A1	1	BRACKET, , BSN RVS003801
1	87416914	1	BRACKET, , ASN RVS003801
2	435434A1	1	BLOCK, Junction
3	140028	1	WASHER, LOCK, M10,
4	9628503	1	NUT, 3/8"-16, G5,
5	86511826	2	SCREW, Cross Pan Hd, M5 x 16, M5 x 16
6	86625261	2	WASHER, M5 x 10 x 1, 5,5 x 10 x 1 mm
7	86509265	2	NUT, M5, Cl 10,
8	397346A1	1	FLASHER UNIT,
9	86624179	4	WASHER, M4, 4,3 x 9 x 0.8 mm
10	86639307	4	WASHER, Lock, M4
11	100012	4	NUT, M4, Cl 8,
12	86511444	3	NUT, M6, Flg Ser,
	431610A2	1	MODULE, Inc. 13 - 33, See Figure(s) : 04-25, With Manual Shift Transmission, Standard Cab, BSN RVS001307
	87416354	1	MODULE, Electronics, Inc. 13 - 34, See Figure (s) : 4-23, Standard Cab, With Manual Shift Transmission, ASN RVS001307
	431500A2	1	MODULE, Electronics, Inc. 13 - 33, See Figure (s) : 4-24, With Manual Shift Transmission, Deluxe Cab
	87418384	1	MODULE, Electronics, Inc. 13 - 33, See Figure (s) : 4-24, Deluxe Cab, With Power Shift Transmission
13	339761A3	1	PLATE,
14	367147A1	3	BRACKET, Mounting
15	367145A1	5	BLOCK, Terminal
16	86639263	3	SCREW, Hex Wash Hd, M5 x 12, Flange, M5 x 12; 4.8
17	43416	3	NUT, Flg, USR, CL 9, M5 x .8
18	430116A1	AR	LOCK,
19	191135A1	1	BASE,
20	86624181	3	WASHER, M6, 6.6 x 12 x 1.6 mm
21	86500688	3	NUT, M6, Cl 10,
22	144417A1	3	BLOCK, CONNECTING,
23	144421A1	2	BLOCK, CONNECTING,
24	194319A1	1	TERMINAL,
25	300655A1	1	SOCKET, POWER,
26	349062A1	1	PAD, RUBBER,
27	310057A1	1	CONNECTOR, ELEC,
28	86639260	4	SCREW, M3 x 12; 4.8
29	86639310	4	WASHER, M3,
30	86508812	4	NUT, M3, Cl 8,
31	121416A1	AR	FUSE, 30 amp
31	121414A1	AR	FUSE, 20 amp
31	121413A1	AR	FUSE, 15 amp
31	121415A1	AR	FUSE, 25 amp
31	121412A1	AR	FUSE, 10 amp
31	121411A1	AR	FUSE, 7,5 amp
31	121411A1	1	FUSE, 5,5 amp
31	121410A1	AR	FUSE, 5 amp

04 -25 ELECTRONIC MODULE ASSY

ссылка	Номер детали	Кол-во	Описание
31	368224A1	2	DIODE, Mini, 1 amp, Differential Lock
32	87414866	AR	RELAY, 20 amp
33	368459A1	AR	RELAY, 70 amp
34	367146A1	4	WEDGE,
35	86624184	6	WASHER, M8 x 16 x 1.6, 9 x 17 x 1,6 mm
36	86632602	2	WASHER, LOCK, Ext Tooth, M10, M10
37	86624176	4	WASHER, M10 x 20 x 2, M10
38	86500689	2	NUT, M10, Cl 10, M10; 10.9
39	A187523	1	BLOCK, CONNECTING, Junction, With Manual Shift Transmission
39	190158A1	1	BLOCK, Block, With Power Shift Transmission
40	311430A1	1	BLOCK, Block
41	323758A4	1	CONTROL UNIT, Three Point Hitch, Download Software for Module Assy. Processor from Service Tool.
42	313776A4	1	CONTROL UNIT, Auxiliary, Download Software for Module Assy. Processor from Service Tool.
43	86639037	3	BOLT, Hex, M6 x 16, 10.9, M6 x 16; 10.9
44	391112A2	1	CONTROL UNIT, Transmission, Download Software for Module Assy. Processor from Service Tool.
45	43232	1	SCREW, M8 x 16; 10.9
46	86625261	1	WASHER, M5 x 10 x 1, 5,5 x 10 x 1 mm
47	43362	6	NUT, M8, Cl 10,

04 -26 HARNESS - FRONT CONSOLE

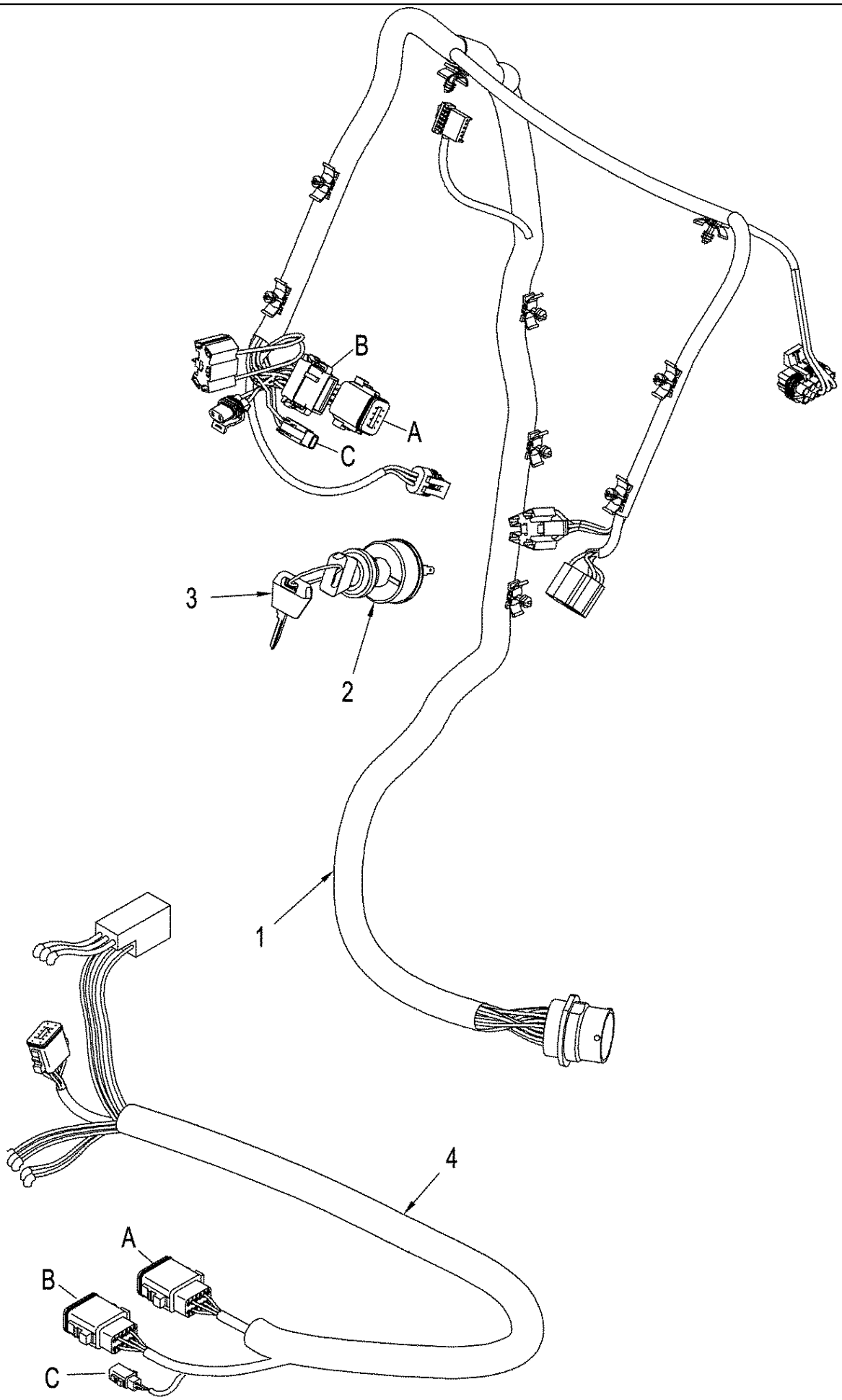

04 -26 HARNESS - FRONT CONSOLE

ссылка	Номер детали	Кол-во	Описание
1	430654A2	1	HARNESS, , With Manual Shift Transmission
1	426766A2	1	HARNESS, , With Power Shift Transmission
2	87416177	1	SWITCH, IGNITION, Inc. 3
3	86502201	1	SET OF 2 KEYS,
	376785A1	1	CONTROL, With Self-Cancel, Inc. 4, Also See Figure: 05-07 (2), With Power Shift Transmission
	360058A1	1	CONTROL, Without Self-Cancel, Inc. 5, Not Illustrated, Also See Figure: 05-07 (2), With Power Shift Transmission
	414332A1	1	CONTROL, With Self-Cancel, Inc. 4, Also See Figure: 05-07 (1), With Manual Shift Transmission
	414331A1	1	CONTROL, Without Self-Cancel, Inc. 5, Not Illustrated, Also See Figure: 05-07 (1), With Manual Shift Transmission
4	86991898	1	CONTROL, With Self-Cancel, With Power Shift Transmission
4	416123A1	1	HARNESS, WIRE, With Self-Cancel, With Manual Shift Transmission
5	303463A1	1	HARNESS, Without Self-Cancel, Not Illustrated, With Power Shift Transmission
5	416124A1	1	HARNESS, WIRE, Without Self-Cancel, Not Illustrated, With Manual Shift Transmission

04 -27 HARNESS - CAB ROOF

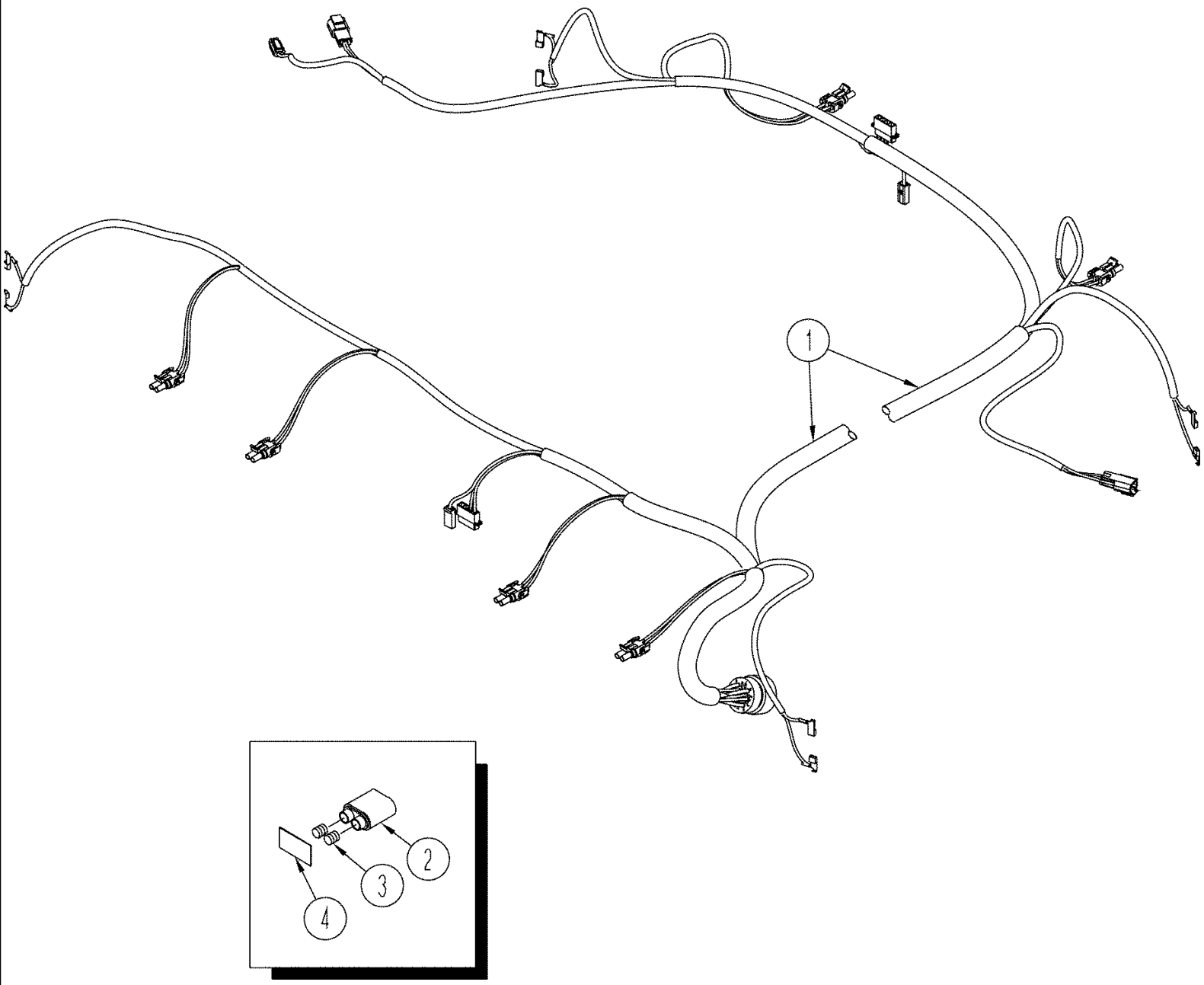

TJ375 TRACTOR - Electrical System

04 -27 HARNESS - CAB ROOF

ссылка	Номер детали	Кол-во	Описание
1	373457A1	1	HARNESS,
2	245483C1	2	CONNECTOR, ELEC, Two Cavity, Without Field Lights
3	225127C1	4	TERMINAL CONNECTOR, Type V4
4	408658A1	2	DECAL, Cover, Without Field Lights

04 -28 HARNESS - REAR FRAME, WITH MANUAL REMOTE

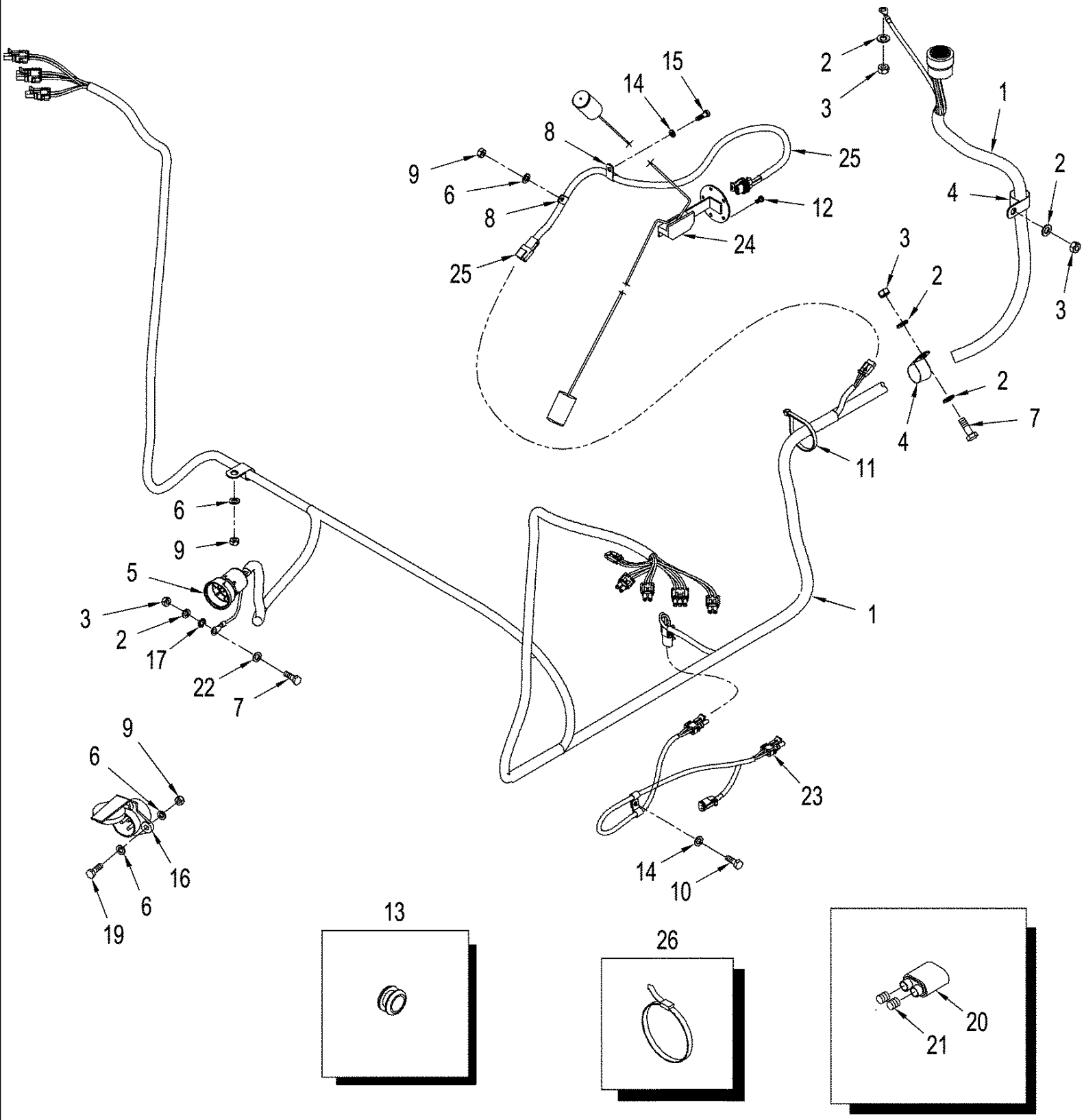

TJ375 TRACTOR - Electrical System

04 -28 HARNESS - REAR FRAME, WITH MANUAL REMOTE

ссылка	Номер детали	Кол-во	Описание
1	445143A1	1	HARNESS,
2	86624176	11	WASHER, M10 x 20 x 2, M10
3	86500689	8	NUT, M10, Cl 10, M10; 10.9
4	86639001	3	CLAMP, 1 3/16", Insul, 7/16" Bolt, 1 ID
5	481849C1	1	COVER,
6	86624184	9	WASHER, M8 x 16 x 1.6, 9 x 17 x 1,6 mm
7	43140	4	BOLT, Hex, M10 x 30, 8.8, Full Thd,
8	86010402	2	CLAMP, 1/2", Insul, 3/8" Bolt,
9	43362	9	NUT, M8, Cl 10,
10	120100	1	BOLT, Hex, M6 x 20, 8.8,
11	435437A1	1	STRAP, CABLE, 7 in, Cable
12	86585709	5	SCREW, Cross Pan Hd, M5 x 10, M5 x 10
13	328265A1	3	GROMMET,
14	86624181	3	WASHER, M6, 6,6 x 12 x 1,6 mm
15	86977726	1	BOLT, Hex, M6 x 12, 8.8,
16	121645C1	1	SOCKET/RECEPTACLE, Implement
17	86632602	1	WASHER, LOCK, Ext Tooth, M10, Lock, M10
18	80681	8	WASHER, LOCK, 5/16",
19	43234	2	BOLT, Hex, M8 x 25, 10.9, Cap, HH, CL 10.9, M8 x 1.25 x 25
20	245483C1	4	CONNECTOR, ELEC, Two Cavity, Without Field Lights
21	225127C1	8	TERMINAL CONNECTOR, Type V4
22	140028	1	WASHER, LOCK, M10,
23	392227A1	1	HARNESS, Differential Lock
24	87434676	2	SENDER UNIT, Fuel Level
25	87438650	1	HARNESS, Jumper Fuel Sensor
26	440567A1	1	CABLE ASSY., 508 mm (20 in)
26	435437A1	2	STRAP, CABLE, Tie, 184 mm (7-1/4 in)

04 -29 HARNESS - REAR FRAME, WITH ELECTRONIC REMOTE AND THREE POINT HITCH

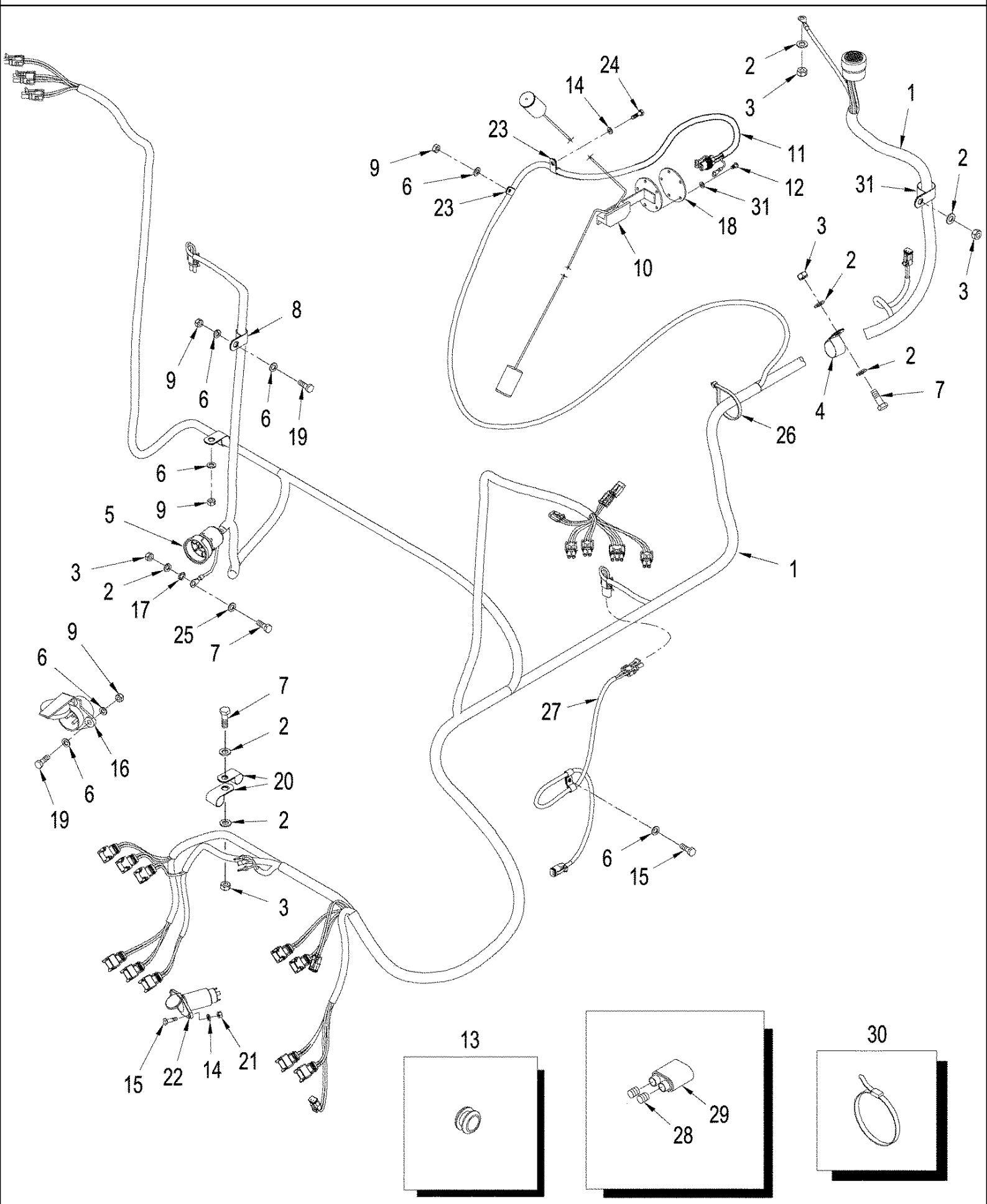

04 -29 HARNESS - REAR FRAME, WITH ELECTRONIC REMOTE AND THREE POINT HITCH

ссылка	Номер детали	Кол-во	Описание
1	87354879	1	HARNESS,
2	86624176	15	WASHER, M10 x 20 x 2,
3	86500689	10	NUT, M10, Cl 10,
4	86639001	3	CLAMP, 1 3/16", Insul, 7/16" Bolt,
5	481849C1	1	COVER,
6	86624184	12	WASHER, M8 x 16 x 1.6,
7	43140	8	BOLT, Hex, M10 x 30, 8.8, Full Thd,
8	86639003	1	CLAMP, 3/8", Insul, 7/16" Bolt,
9	43362	10	NUT, M8, Cl 10,
10	87434676	1	SENDER UNIT, Fuel Level, Inc. 18
11	87438650	1	HARNESS, Jumper Fuel Sensor
12	614-5010	6	BOLT, Hex, M5 x 10, 8.8, Full Thd,
13	328265A1	3	GROMMET,
14	86624181	5	WASHER, M6,
15	120100	5	BOLT, Hex, M6 x 20, 8.8,
16	121645C1	1	SOCKET/RECEPTACLE,
17	86632602	1	WASHER, LOCK, Ext Tooth, M10,
18	104812C3	1	GASKET,
19	43234	3	BOLT, Hex, M8 x 25, 10.9,
20	86639010	1	CLAMP, 3/8", Insul, 1/2" Bolt,
21	86500688	2	NUT, M6, Cl 10,
22	367322A1	1	CONNECTOR, Remote, Three Point Hitch
23	86010402	2	CLAMP, 1/2", Insul, 3/8" Bolt,
24	86977726	1	BOLT, Hex, M6 x 12, 8.8,
25	140028	1	WASHER, LOCK, M10,
26	435437A1	1	STRAP, CABLE, Cable, 7 in
27	392227A1	1	HARNESS, Differential Lock
28	225127C1	8	TERMINAL CONNECTOR, Type V4
29	245483C1	4	CONNECTOR, ELEC, , Without Field Lights
30	50-2037T1	2	STRAP,
31	895-11005	6	WASHER, M5 x 10 x 1,

04 -30 HARNESS - REAR FRAME, WITH ELECTRONIC REMOTE, WITHOUT THREE POINT HITCH

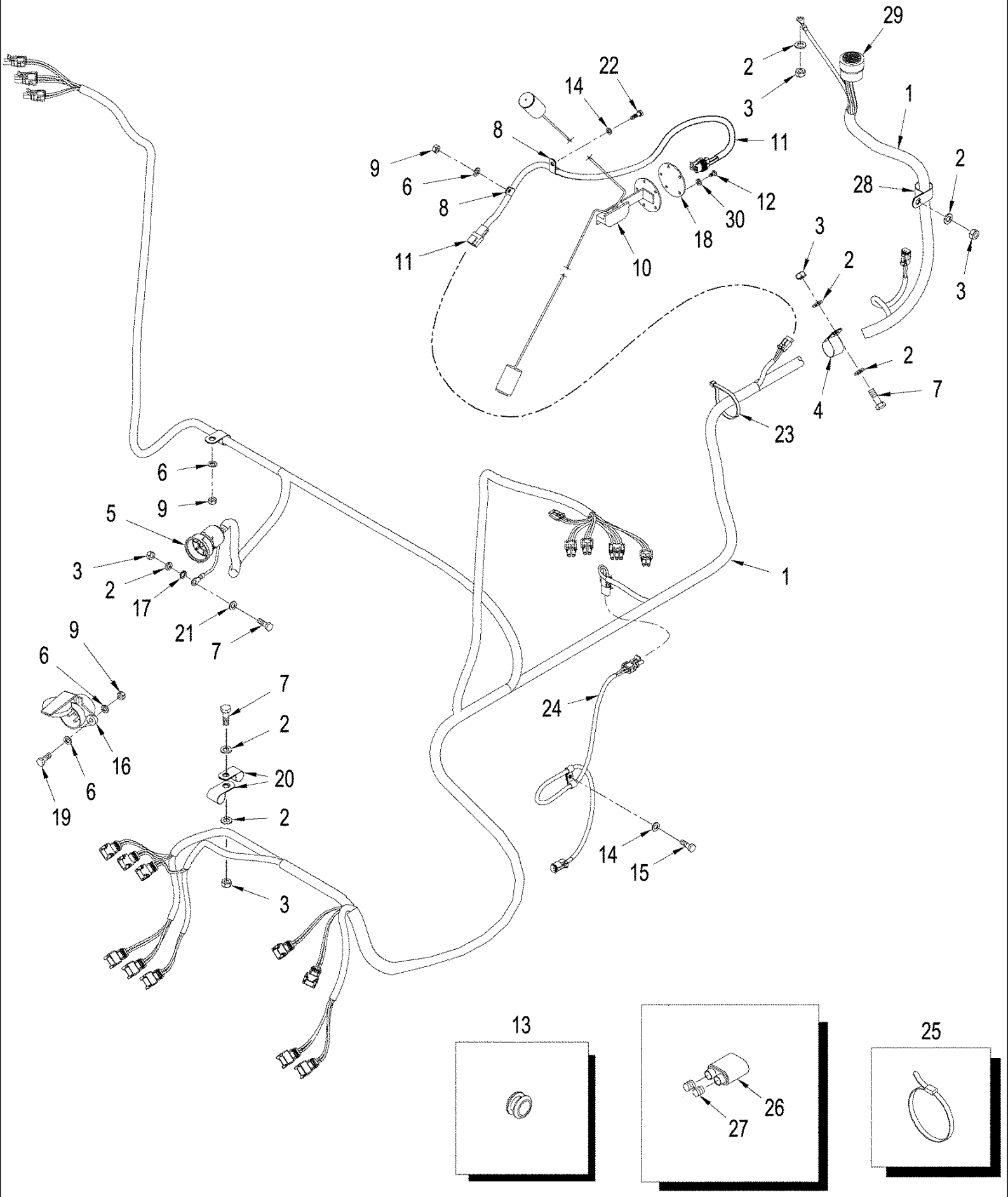

04 -30 HARNESS - REAR FRAME, WITH ELECTRONIC REMOTE, WITHOUT THREE POINT HITCH

ссылка	Номер детали	Кол-во	Описание
1	445144A1	1	HARNESS,
2	86624176	15	WASHER, M10 x 20 x 2,
3	86500689	10	NUT, M10, Cl 10,
4	515-23381	3	CLAMP, 1 1/2", Insul, 3/8" Bolt,
5	481849C1	1	COVER,
6	86624184	10	WASHER, M8 x 16 x 1.6,
7	43140	6	BOLT, Hex, M10 x 30, 8.8, Full Thd,
8	86010402	2	CLAMP, 1/2", Insul, 3/8" Bolt,
9	43362	9	NUT, M8, Cl 10,
10	87434676	1	SENDER UNIT, Fuel Level, Inc. 18
11	87438650	1	HARNESS, Jumper Fuel Sensor
12	614-5010	6	BOLT, Hex, M5 x 10, 8.8, Full Thd,
13	328265A1	3	GROMMET,
14	86624181	1	WASHER, M6,
15	120100	4	BOLT, Hex, M6 x 20, 8.8,
16	121645C1	1	SOCKET/RECEPTACLE,
17	86632602	1	WASHER, LOCK, Ext Tooth, M10,
18	104812C3	1	GASKET,
19	43234	2	BOLT, Hex, M8 x 25, 10.9,
20	515-2595	1	CLAMP, 3/8", Insul, 1/2" Bolt,
21	140028	1	WASHER, LOCK, M10,
22	86977726	1	BOLT, Hex, M6 x 12, 8.8,
23	440567A1	2	CABLE ASSY., Strap
24	392227A1	1	HARNESS, Differential Lock
25	435437A1	2	STRAP, CABLE, 508 mm (20 in)
26	245483C1	4	CONNECTOR, ELEC, , Without Field Lights
27	225127C1	8	TERMINAL CONNECTOR, Type V4
28	515-25254	1	CLAMP, 1", Insul, 1/2" Bolt,
29	87314864	1	TERMINAL CONNECTOR, 48 pin

04 -31 HARNESS - FLEX CONTROL, BSN RVS003801

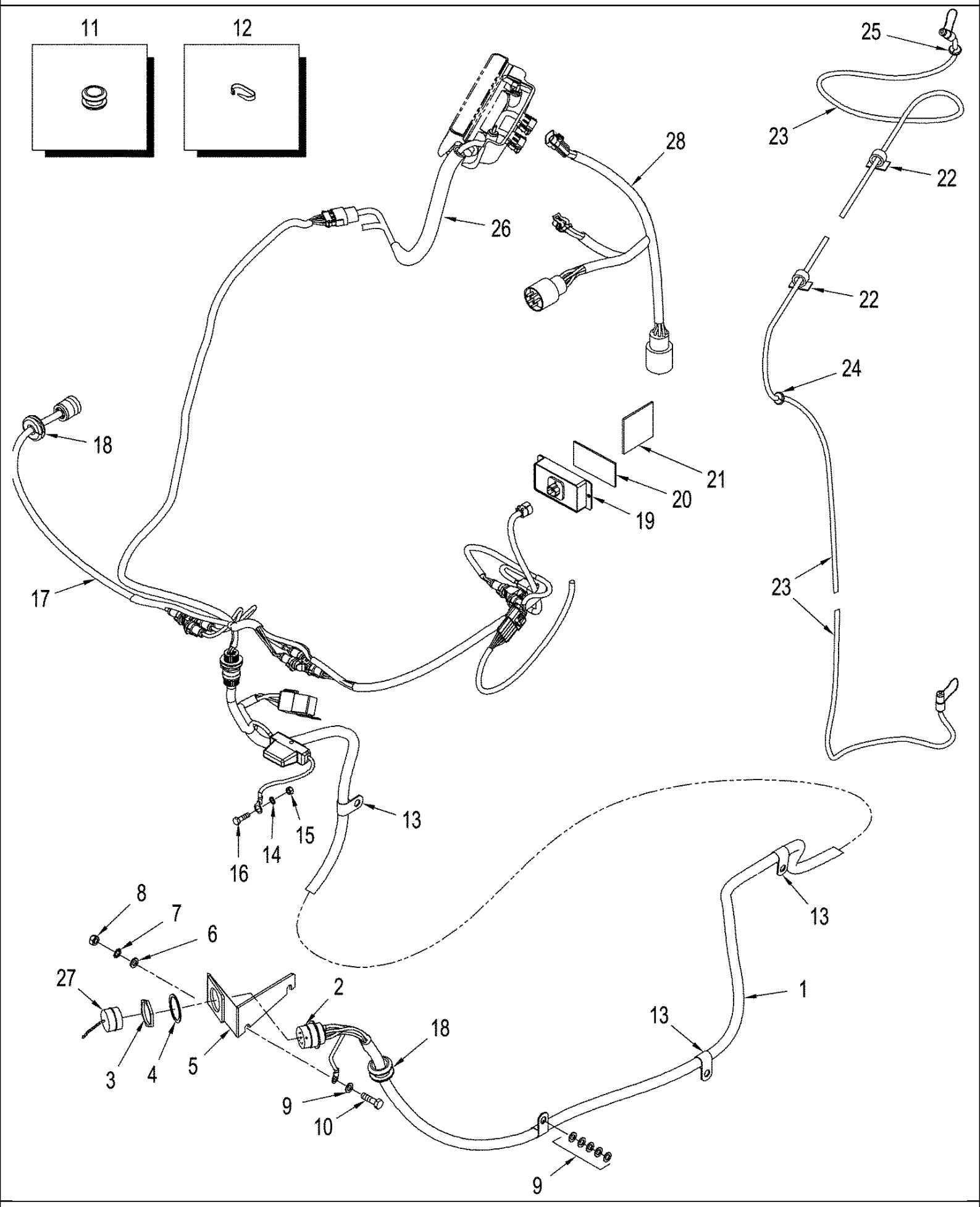

TJ375 TRACTOR - Electrical System

04 -31 HARNESS - FLEX CONTROL, BSN RVS003801

ссылка	Номер детали	Кол-во	Описание
1	405029A2	1	HARNESS, Chassis
2	352506A1	1	CONNECTOR, ELEC,
3	459329C1	1	NUT,
4	459330C1	1	WASHER, LOCK,
5	405387A2	1	PLATE, Implement Connector
6	86632602	1	WASHER, LOCK, Ext Tooth, M10, Lock, M10
7	140028	2	WASHER, LOCK, M10,
8	86500689	2	NUT, M10, Cl 10, M10; 10.9
9	86625251	7	WASHER, M10 x 18 x 1.6, 11 x 18 x 1.6 mm
10	86624978	2	BOLT, Hex, M10 x 35, 10.9, Full Thd,
11	328265A1	1	GROMMET,
12	435437A1	12	STRAP, CABLE, 7 in
13	86598598	6	CLAMP, 3/4", Insul, 1/2" Bolt, 3/4 ID
14	86509828	1	WASHER, LOCK, M5, Lock, M5
15	86509265	1	NUT, M5, Cl 10,
16	86632597	1	BOLT, Hex, M5 x 12, 8.8, Full Thd, M5 x 12; 8.8
17	405030A2	1	HARNESS, Cab
18	86632690	1	GROMMET, 3/4" ID x 1 7/16" Groove Dia, Str Cut,
19	284638A2	1	CONNECTOR, ELEC, Active
20	406448A1	2	FASTENER, Dual Lock
21	406448A1	2	FASTENER, Dual Lock
22	169850C2	2	ANCHOR,
23	405687A1	1	CABLE, Receiver
24	86624019	1	GROMMET, 3/8" ID x 5/8" Groove Dia, Str Cut, 3/8 ID
25	86624019	1	GROMMET, 3/8" ID x 5/8" Groove Dia, Str Cut, 5/8
26	405032A1	1	TUBE, Monitor
27	245041C1	1	CAP,
28	15470	1	HARNESS, Flex Control Conversion

04 -31(01) HARNESS - FLEX CONTROL, ASN RVS003801

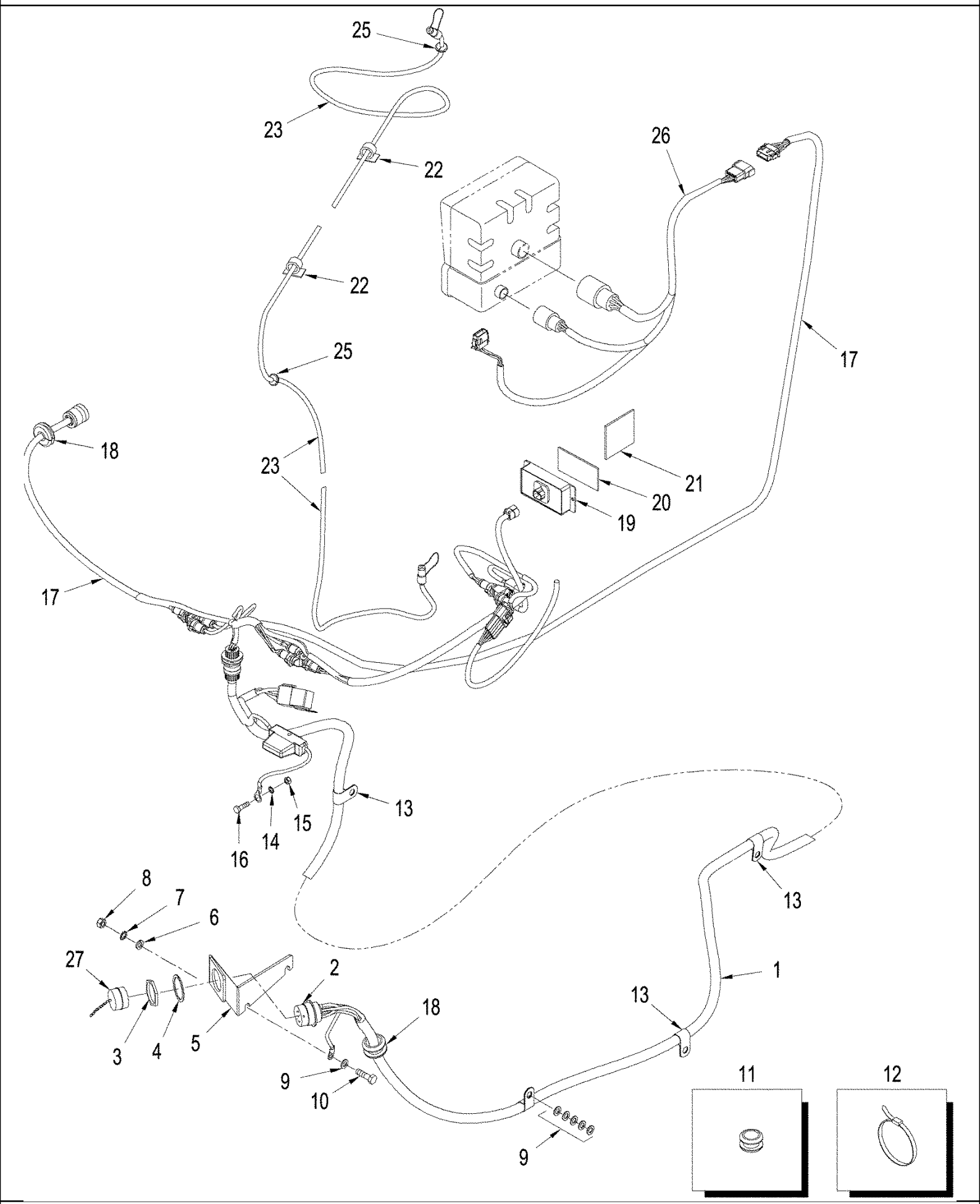

TJ375 TRACTOR - Electrical System

04 -31(01) HARNESS - FLEX CONTROL, ASN RVS003801

ссылка	Номер детали	Кол-во	Описание
1	405029A2	1	HARNESS, Chassis
1A	338056A1	1	FUSE, 40 amp (Not Shown)
2	352506A1	1	CONNECTOR, ELEC,
3	459329C1	1	NUT,
4	459330C1	1	WASHER, LOCK,
5	405387A2	1	PLATE, Implement Connector
6	86632602	1	WASHER, LOCK, Ext Tooth, M10, Lock, M10
7	140028	2	WASHER, LOCK, M10,
8	86500689	2	NUT, M10, Cl 10, M10; 10.9
9	86625251	7	WASHER, M10 x 18 x 1.6, 11 x 18 x 1.6 mm
10	86624978	2	BOLT, Hex, M10 x 35, 10.9, Full Thd,
11	328265A1	1	GROMMET,
12	435437A1	3	STRAP, CABLE,
13	86598598	6	CLAMP, 3/4", Insul, 1/2" Bolt, 3/4 ID
14	86509828	1	WASHER, LOCK, M5, Lock, M5
15	86509265	1	NUT, M5, Cl 10,
16	86632597	1	BOLT, Hex, M5 x 12, 8.8, Full Thd, M5 x 12; 8.8
17	87414714	1	HARNESS, Cab
18	86632690	1	GROMMET, 3/4" ID x 1 7/16" Groove Dia, Str Cut,
19	284638A2	1	CONNECTOR, ELEC, Active
20	406450A1	2	FASTENER, Dual Lock
21	406449A1	2	FASTENER, Dual Lock
22	169850C2	2	ANCHOR,
23	405687A1	1	CABLE, Receiver
24	86637652	1	PIN, SPLIT (COTTER), Int, 9/64" x .054",
25	86624019	1	GROMMET, 3/8" ID x 5/8" Groove Dia, Str Cut, 5/8
26	87414763	1	HARNESS, Flex Control Jumper
27	245041C1	1	CAP,

04 -32 WIRING - MEGA FLOW HYDRAULIC CONTROLS

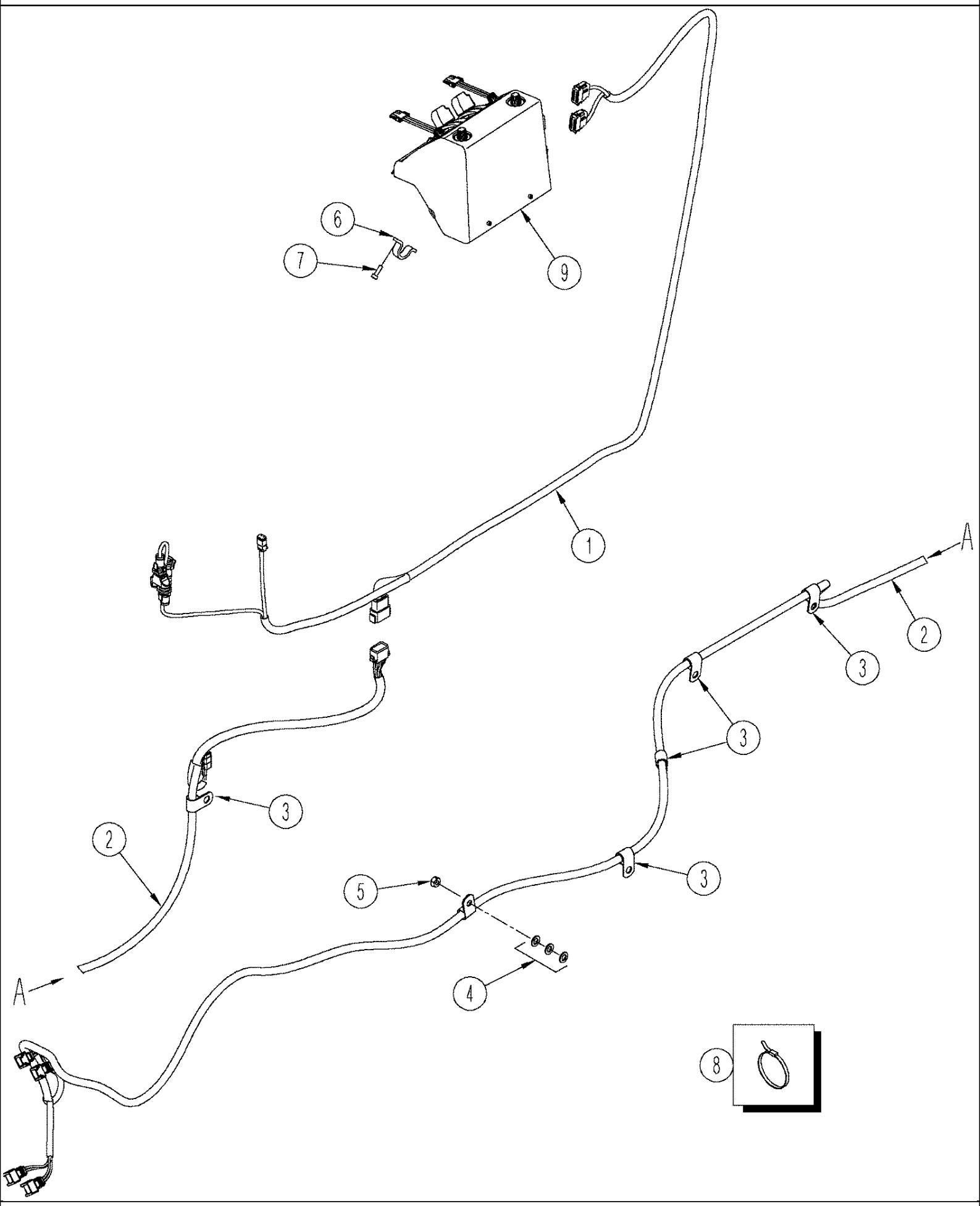

04 -32 WIRING - MEGA FLOW HYDRAULIC CONTROLS

ссылка	Номер детали	Кол-во	Описание
1	430834A1	1	HARNESS, Cab
2	430835A1	1	HARNESS,
3	86598598	6	CLAMP, 3/4", Insul, 1/2" Bolt,
4	86624176	3	WASHER, M10 x 20 x 2, M10
5	86500689	1	NUT, M10, Cl 10, M10; 10
6	412027A2	2	CLAMP, Pipe
7	86642446	4	SCREW, Socket, M6 x 20; 8.8
8	435437A1	2	STRAP, CABLE, Cable
9	REF	1	INSTRUCTION, Control Box, See Figure (s) : 04-33
	719576003	1	KIT, Mega Flow, Inc. 6, See Figure(s) : 04-33

04 -33 MEGA FLOW HYDRAULIC CONTROLS

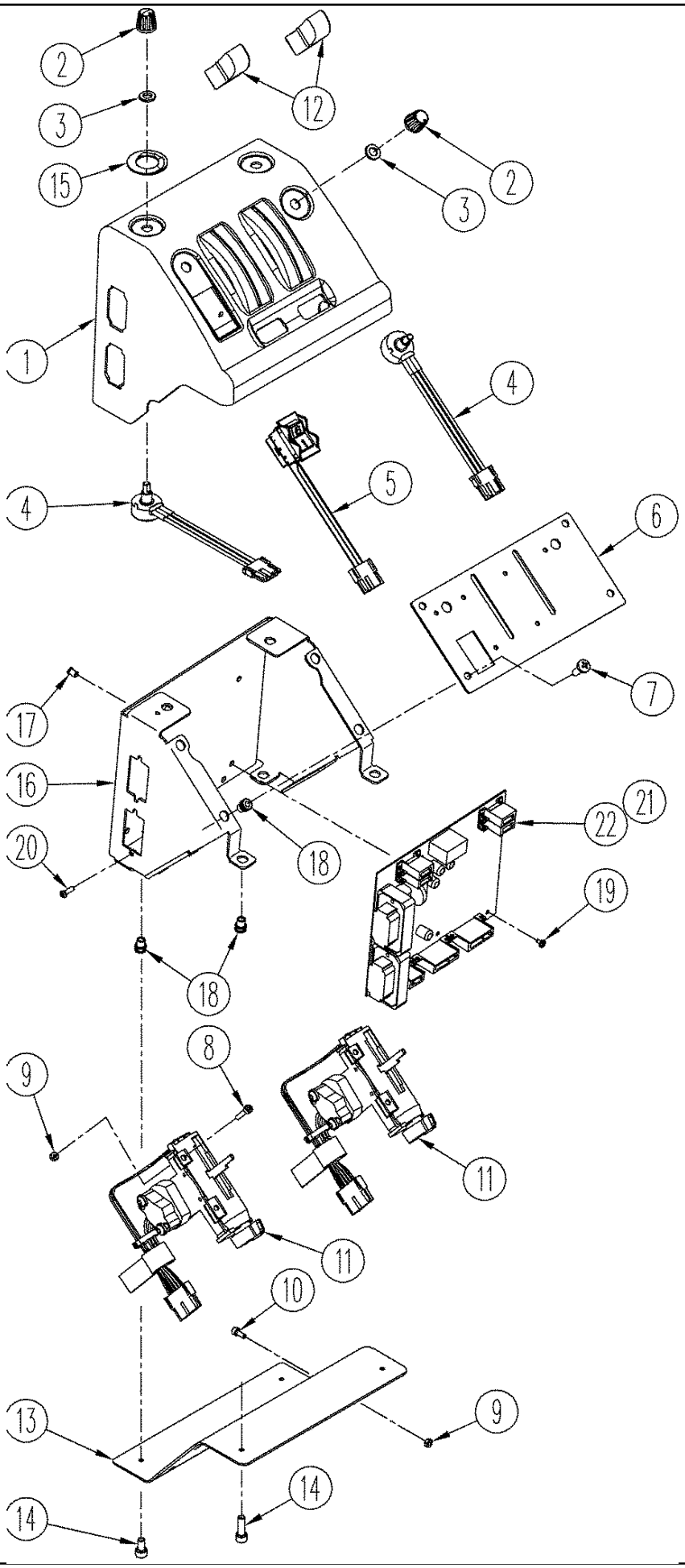

04 -33 MEGA FLOW HYDRAULIC CONTROLS

ссылка	Номер детали	Кол-во	Описание
1	418147A4	1	COVER ASSY,
2	276797A1	4	KNOB, Flow Control
3	444868A1	8	NUT, 3/4
4	256305A2	4	POTENTIOMETER, Draft Control
5	413148A1	1	SWITCH,
6	NSS	1	NOT SERVICED SEPARATELY, Plate, Mounting
7	86511829	4	SCREW, Cross Pan Hd, M6 x 16,
8	86639294	4	SCREW, Hex Soc Hd, M4 x 20, 8.8, Socket, M4 x 20; 8.8
9	100012	6	NUT, M4, Cl 8,
10	86639292	2	SCREW, Socket, M4 x 10; 8.8
11	406961A1	2	LEVER ASSY., Electrohydraulic
12	438399A1	2	KNOB,
13	418148A2	1	COVER, Plate
14	86642445	2	SCREW, Socket, M6 x 12; 8.8
15	438237A1	1	DECAL, Flow Control
16	411981A3	1	BRACKET, Mounting
17	412295A1	5	SPACER,
18	404287A1	12	INSERT,
19	47112222	5	SCREW, M4 x 6
20	86642429	4	SCREW,
21	NSS	1	NOT SERVICED SEPARATELY, Software
22	412070A1	1	BOARD, PRINTED CIRCUIT,
	719576003	1	KIT, Mega Flow, Inc. 1 - 9, 11 - 22, See Figure(s) : 04-32

TJ375 TRACTOR - Electrical System

04 -34 ALARM - BACK-UP

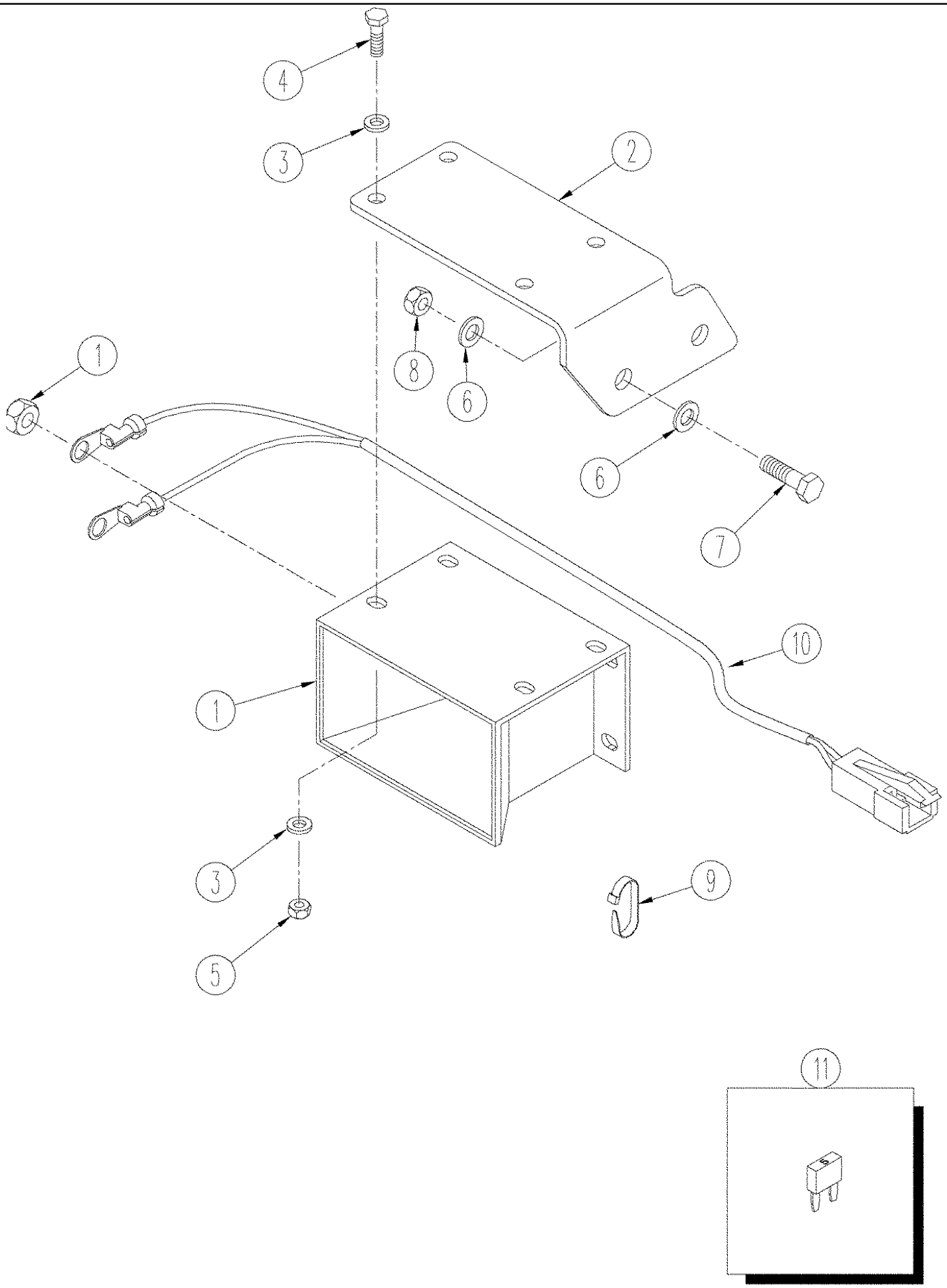

TJ375 TRACTOR - Electrical System

04 -34 ALARM - BACK-UP

ссылка	Номер детали	Кол-во	Описание
1	72186231	1	ALARM, Includes : Nuts
2	440134A1	1	BRACKET,
3	86639317	8	WASHER, M6 x 13 x 2, HT, 6,6 x 12.5 x 2 mm
4	86624176	4	WASHER, M10 x 20 x 2, M10
5	86500688	4	NUT, M6, Cl 10,
6	86624176	4	WASHER, M10 x 20 x 2, M10
7	86624978	2	BOLT, Hex, M10 x 35, 10.9, Full Thd,
8	86500689	2	NUT, M10, Cl 10, M10; 10.9
9	435437A1	2	STRAP, CABLE, 7 in
10	391364A1	1	HARNESS,
11	121410A1	1	FUSE, 5 amp

04 -35 INTELLISTEER, GPS - MOUNTING, BSN RVS003801

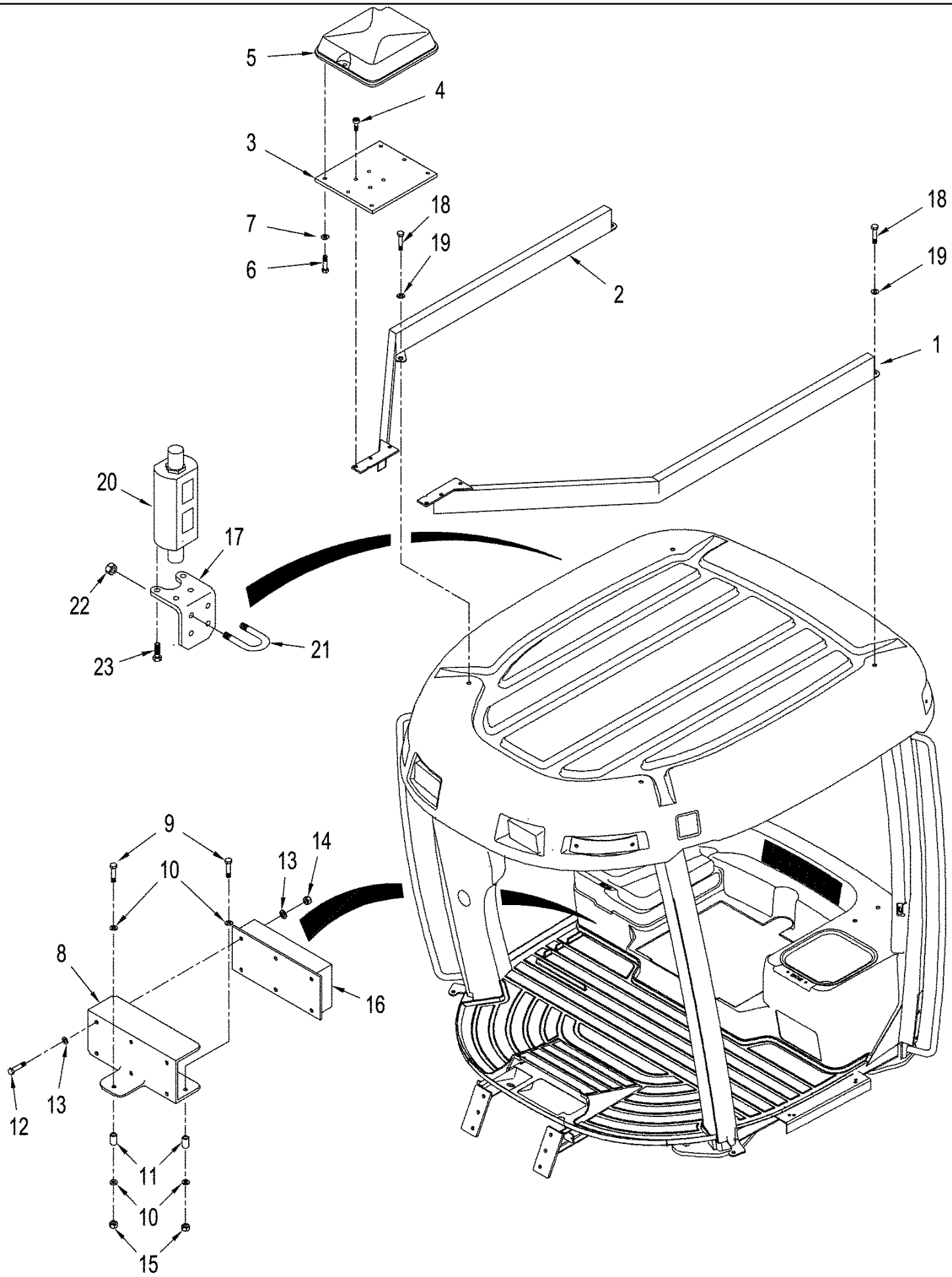

TJ375 TRACTOR - Electrical System

04 -35 INTELLISTEER, GPS - MOUNTING, BSN RVS003801

ссылка	Номер детали	Кол-во	Описание
1	87440737	1	TUBE ASSY., GPS Antenna Mounting, LH
2	87440736	1	TUBE ASSY., GPS Antenna Mounting, RH
3	87440738	1	PLATE, BASE, GPS Antenna
4	374897	4	SCREW, Hex Flat Hd, M8 x 25, 4.8, Flg. Hd, M8 x 25, CL4.8
5	87428387	1	MODULE, Receiver, DGPS / RTK
6	281032	3	BOLT, Hex, 1/4"-20 x 3/4", G8, Full Thd, Cap, HH, 1/4" x 3/4", G8
7	87361	3	WASHER, 1/4", SAE,
8	87421420	1	PLATE, BASE, Controller Mounting
9	43235	3	BOLT, Hex, M8 x 30, 10.9, Cap, HH, M8 x 30, CL10.9
10	86624184	8	WASHER, M8 x 16 x 1.6, 9 x 16 x 1.6 mm
11	87421443	3	SPACER,
12	86639294	6	SCREW, Hex Soc Hd, M4 x 20, 8.8, Soc. Hd., M4 x 20, CL8.8
13	86624179	12	WASHER, M4, 4.3 x 9 x 0.8 mm
14	100012	6	NUT, M4, Cl 8,
15	43362	3	NUT, M8, Cl 10,
16	87429456	1	KIT, FIP, Dock
16	87428425	1	MODULE, Autopilot, Controller
17	87429553	1	BRACKET, RTK Radio
18	86529976	4	BOLT, Hex, M16 x 35, 10.9, Hex, M16 x 35, 10.9
19	86639311	4	WASHER, M16 x 34 x 3, 17.5 x 34 x 3.0 mm
20	87428389	1	RADIO, RTK
21	19-153	2	U-BOLT, Bolt, U, 5/16
22	86050277	4	NUT, LOCK, 5/16"-18, GB, Nylon, 5/16
23	280683	4	SCREW, Cap, HH, 5/16 x 1/2, G5

TJ375 TRACTOR - Electrical System

04 -35(01) INTELLISTEER, GPS - MOUNTING, ASN RVS003801

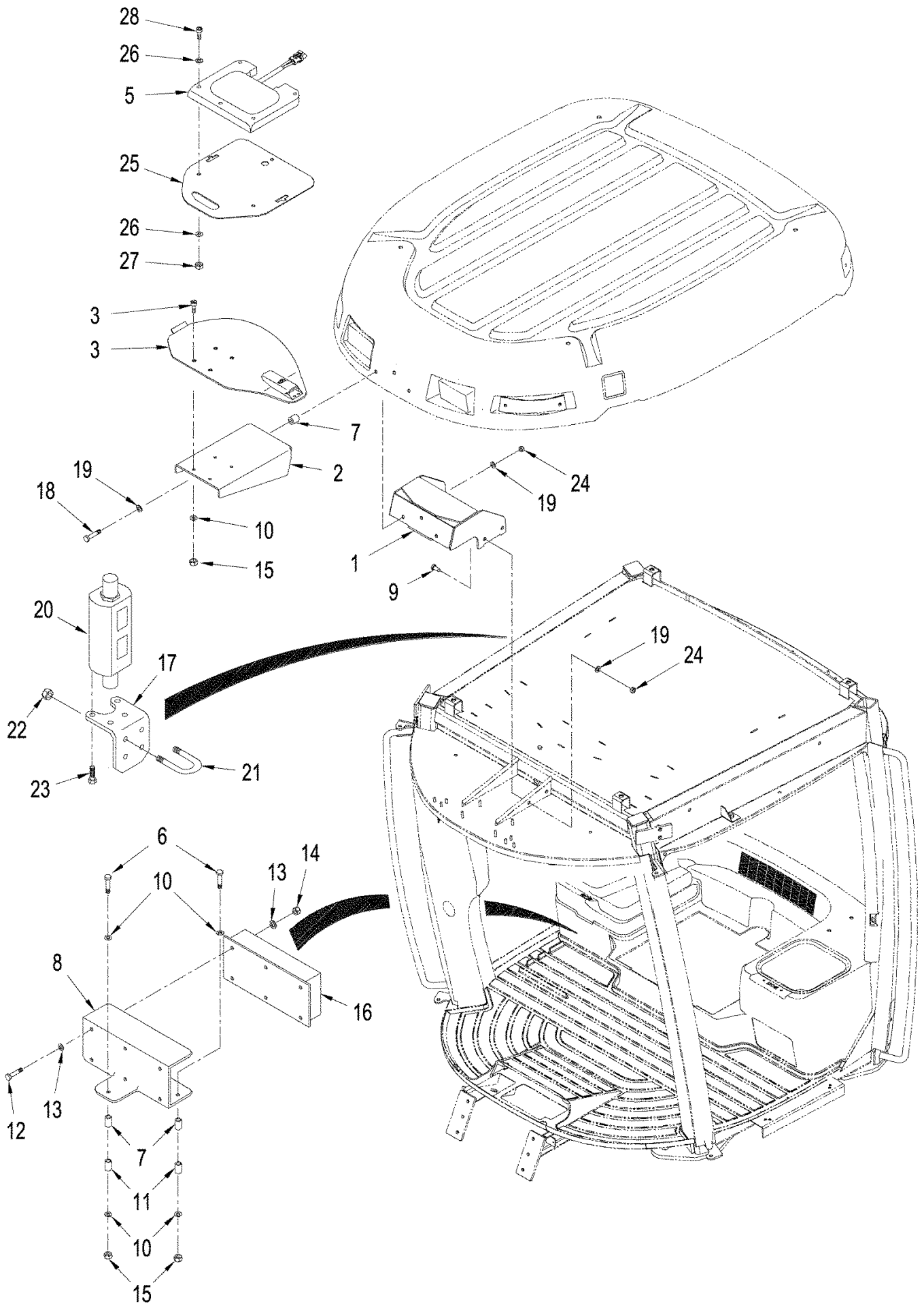

TJ375 TRACTOR - Electrical System

04 -35(01) INTELLISTEER, GPS - MOUNTING, ASN RVS003801

ссылка	Номер детали	Кол-во	Описание
1	87304763	1	MOUNTING PARTS, Mounting
2	87304768	1	BRACKET, Antenna Mounting
3	87528080	1	PLATE, BASE, GPS Antenna
4	374897	4	SCREW, Hex Flat Hd, M8 x 25, 4.8,
5	87308224	1	MODULE, Receiver, DGPS / RTK
6	86625003	3	BOLT, Hex, M8 x 50, 10.9, Cap, HH, M8 x 50, CL10.9
7	87304771	6	SPACER,
8	87421420	1	PLATE, BASE, Controller Mounting
9	9861444	4	BOLT, Hex, M10 x 20, 10.9, Full Thd, Bolt, M10 x 20, CL10.9
10	86624184	13	WASHER, M8 x 16 x 1.6, 9 x 16 x 1.6 mm
11	408566A1	3	INSERT, , BSN RVS005006
12	86639294	6	SCREW, Hex Soc Hd, M4 x 20, 8.8, Soc. Hd., M4 x 20, CL8.8
13	86624179	12	WASHER, M4, 4.3 x 9 x 0.8 mm
14	100012	6	NUT, M4, Cl 8,
15	43362	7	NUT, M8, Cl 10,
16	87428425	1	MODULE, Autopilot, Controller
17	87429553	1	BRACKET, RTK Radio, BSN RVS005006
18	827-10055	3	BOLT, Hex, M10 x 55, 10.9, Cap, HH, M10 x 55, CL10.9
19	86624176	10	WASHER, M10 x 20 x 2,
20	87428389	1	RADIO, RTK
21	19-153	2	U-BOLT, Bolt, U, 5/16
22	86050277	4	NUT, LOCK, 5/16"-18, GB, Nylon, 5/16
23	280683	4	SCREW, Cap, HH, 5/16 x 1/2, G5
24	86500689	7	NUT, M10, Cl 10, M10, CL10
25	87568854	1	Mounting Receiver
26	895-11006	6	WASHER, M6,
27	825-5146	3	NUT, M6, Flg Ser,
28	814-8060	3	BOLT, Hex, M8 x 60, 8.8,

04 -36 INTELLISTEER - VIRTUAL TERMINAL & RELEATED PARTS, BSN RVS003801

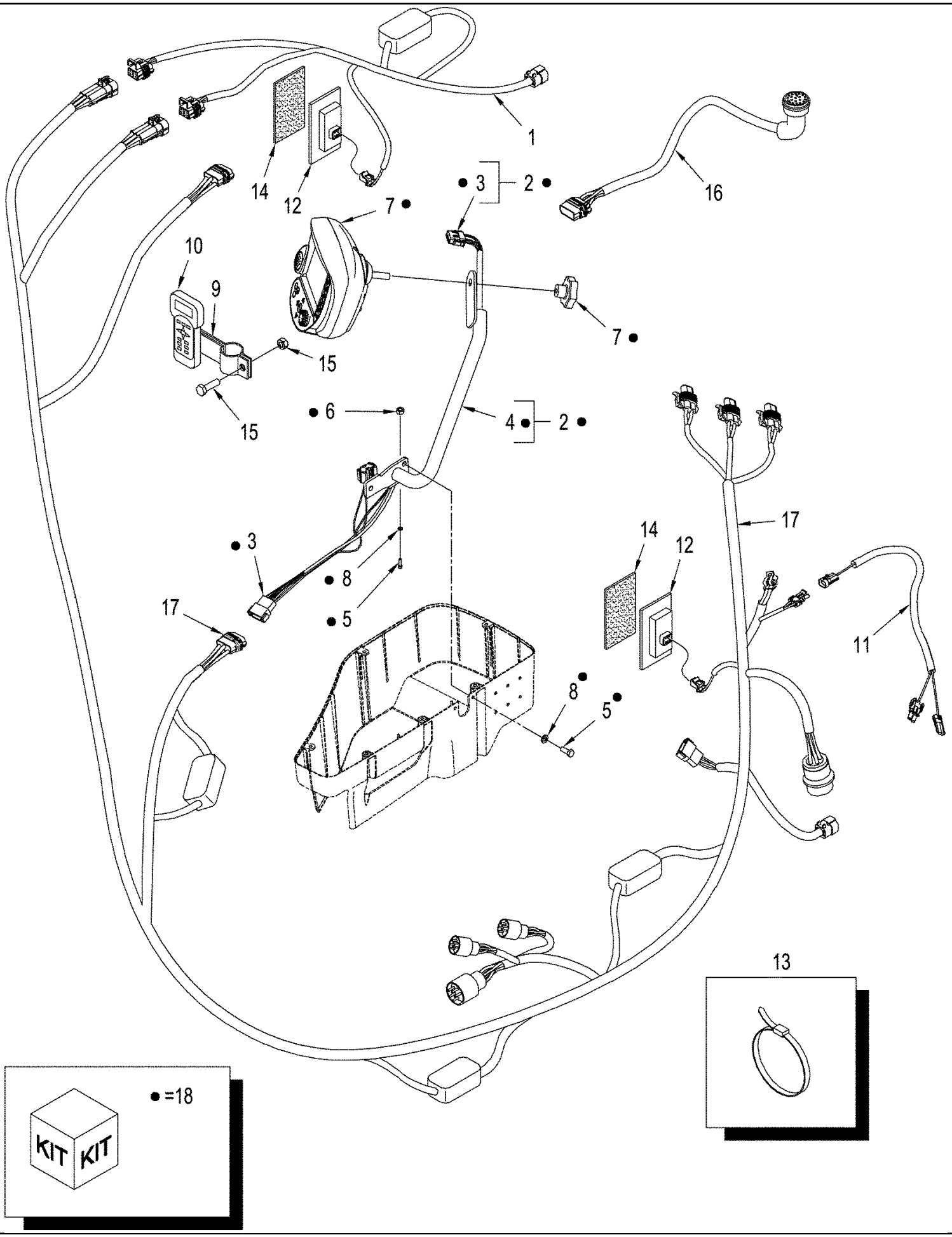

TJ375 TRACTOR - Electrical System

04 -36 INTELLISTEER - VIRTUAL TERMINAL & RELEATED PARTS, BSN RVS003801

ссылка	Номер детали	Кол-во	Описание
1	87436715	1	HARNESS, Auto Guidance, Cab Roof
2	87415235	1	TUBE, SUPPORT, Mounting, Inc. 3, 4
3	NSS	1	NOT SERVICED SEPARATELY, Harness, Virtual Terminal
4	NSS	1	NOT SERVICED SEPARATELY, Tube, Mounting
5	43233	3	BOLT, Hex, M8 x 20, 10.9, Cap, HH, M8 x 20, CL10.9
6	43362	3	NUT, M8, Cl 10,
7	NSS	1	NOT SERVICED SEPARATELY, Monitor, Color Virtual Terminal, Order from INTELLISTEER Pricebook.
8	86624184	3	WASHER, M8 x 16 x 1.6, 9 x 16 x 1.6 mm
9	87428367	1	BRACKET, Mounting
10	87428366	1	MODULE, Radio, RDL
11	87422388	1	HARNESS, Wheel Speed / Transmission
12	284638A2	2	CONNECTOR, ELEC, Active Terminator
13	435437A1	15	STRAP, CABLE, Tie
14	406450A1	4	FASTENER, Velcro
15	87428369	1	SET, Bolt
16	87428396	1	CABLE ASSY., RTK Radio to Antenna
17	87440452	1	HARNESS, Auto Guidance, Cab and Chasis
18	87440701	1	KIT, FIP, Virtual Terminal Display, Inc. 2 - 8

04 -36(01) INTELLISTEER - VIRTUAL TERMINAL & RELEATED PARTS, ASN RVS003801

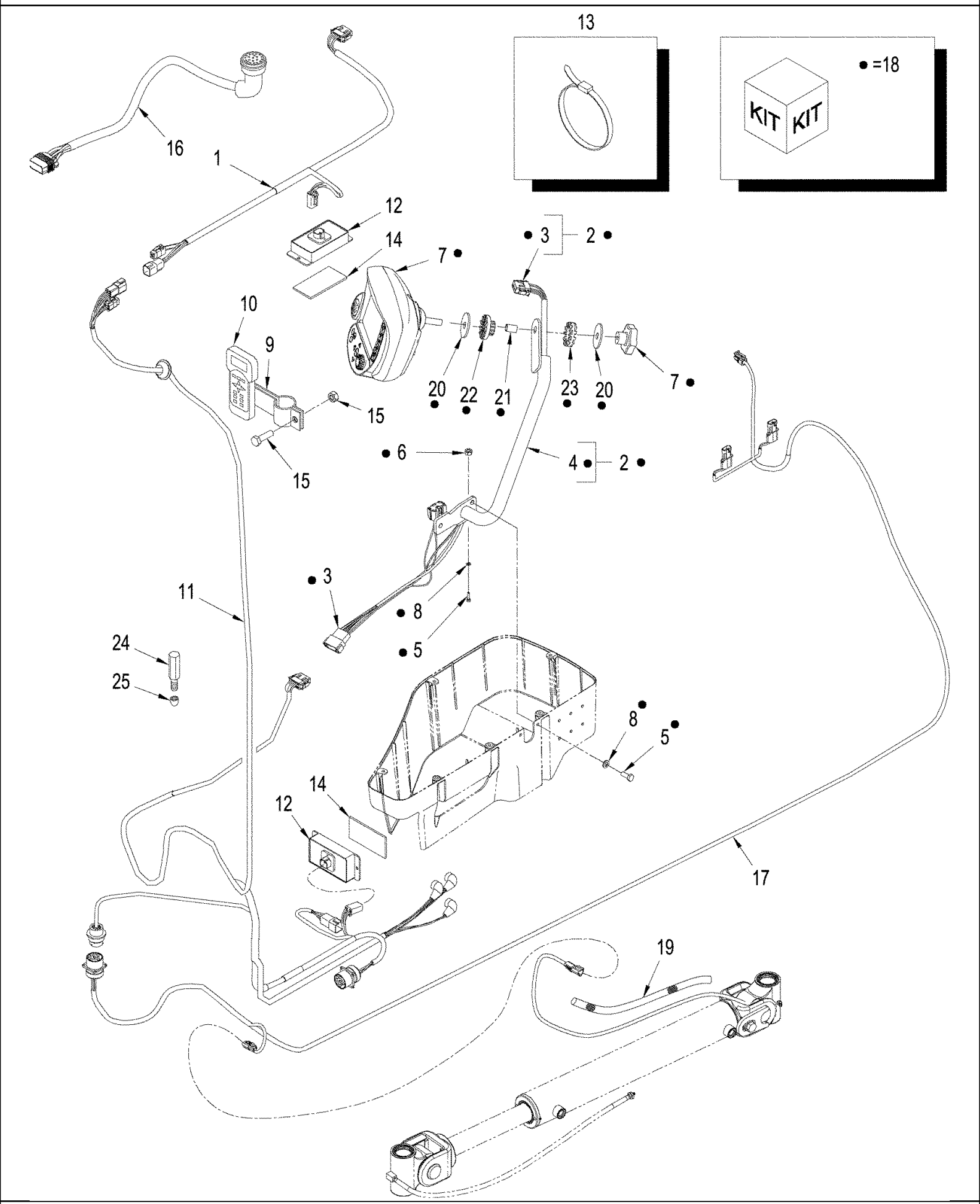

TJ375 TRACTOR - Electrical System

04 -36(01) INTELLISTEER - VIRTUAL TERMINAL & RELEATED PARTS, ASN RVS003801

ссылка	Номер детали	Кол-во	Описание
1	87436715	1	HARNESS, Auto Guidance, Cab Roof
2	87415235	1	TUBE, SUPPORT, Mounting, Inc. 3, 4
3	NSS	1	NOT SERVICED SEPARATELY, Harness, Virtual Terminal
4	NSS	1	NOT SERVICED SEPARATELY, Tube, Mounting
5	43233	3	BOLT, Hex, M8 x 20, 10.9, Cap, HH, M8 x 20, CL10.9
6	43362	3	NUT, M8, Cl 10,
7	NSS	1	NOT SERVICED SEPARATELY, Monitor, Color Virtual Terminal, Order from INTELLISTEER Pricebook.
8	86624184	3	WASHER, M8 x 16 x 1.6, 9 x 16 x 1.6 mm
9	87428367	1	BRACKET, Mounting
10	87428366	1	MODULE, Radio, RDL
11	87308467	1	HARNESS, Cab, BSN RVS005006
11	87311247	1	HARNESS, Cab, ASN RVS005006
12	284638A2	2	CONNECTOR, ELEC, Active Terminator
13	L11541	15	STRAP, Tie
14	406450A1	4	FASTENER, Velcro
15	87428369	1	SET, Bolt
16	87428396	1	CABLE ASSY., RTK Radio to Antenna
17	87308468	1	HARNESS, Chasis, BSN RVS005006
17	87311248	1	HARNESS, Chassis, ASN RVS005006
18	87440701	1	KIT, FIP, Virtual Terminal Display, Inc. 2 - 8 & 20 - 23
19	A64737	1	SLEEVE, Sleeve, Protective
20	86624150	2	WASHER, 17/32" x 2" x .060",
21	87351882	1	TUBE SPACER,
22	87313871	1	BUSHING, SPLINED, Isolation
23	87313870	1	ISOLATOR, Ring
24	87423195	4	SPACER,
25	440570A1	4	STUD, Threaded

05 -01 HYDRAULICS - STEERING

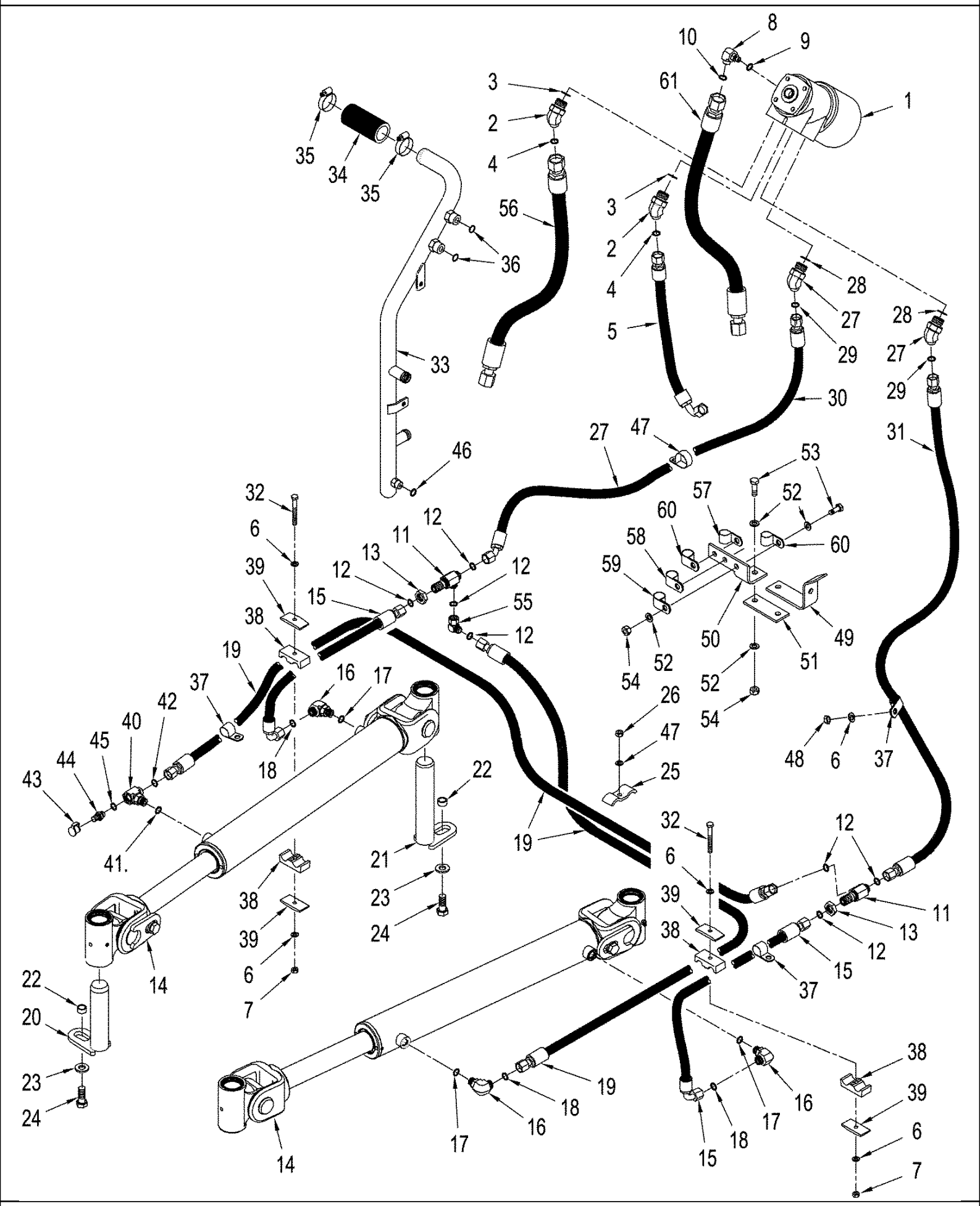

TJ375 TRACTOR - Steering System

05 -01 HYDRAULICS - STEERING

ссылка	Номер детали	Кол-во	Описание
1	373374A2	1	VALVE, CONTROL, Steering, See Figure : 05-03
2	86639056	2	ELBOW, 45є, 13/16"-18 ORFS x M18 x 1.5 ORB, 45, M20 fc sl x 2,7 orb, Inc. 3, 4
3	86639045	3	O-RING, Cl 6, 23.6MM ID x 2.9 Thk, 23.6 ID x 2.9
4	9991976	3	O-RING, -018, 90 Duro, .739" ID x .070" Thk,
5	327494A1	1	HOSE ASSY., 1240 mm (49 in), Supply, From Priority Valve, BSN RVS001940
5	87415315	1	HOSE ASSY., 1240 mm (48-13/16 in), Supply, From Priority Valve, ASN RVS001940
6	86624184	6	WASHER, M8 x 16 x 1.6, 9 x 17 x 1.6 mm
7	86528579	9	NUT, LOCK, M8 x 1.25, Cl 10,
8	86580178	1	ELBOW, 90є, 11/16"-18 ORFS x M12 x 1.5 ORB, 90, 11/16 fc sl x 12 Or, Inc. 9, 10
9	86642448	1	O-RING, Cl 6, 9.3MM ID x 2.2 Thk, 9.3 ID x 2.2
11	86639080	2	TEE, 13/16"-16 ORFS, Blkd Run, M12 fc sl x blkhd fc sl, Inc. 12
13	86639083	2	NUT, LOCK, 13/16"-16, ORFS Blkhd, 13/16 in
14	339832A1	2	CYLINDER, Articulation, See Figure : 05-02, BSN RVS003801
14	406999A1	2	CYLINDER STEERING, See Figure : 05-02, ASN RVS003801
15	367244A1	2	HOSE, 550 mm (21-1/2 in)
16	86579691	3	ELBOW, 90є, 13/16"-18 ORFS x M18 x 1.5 ORB, Includes 17, 18
17	86639043	3	O-RING, 15.3 ID x 2.2
19	367243A1	2	HOSE ASSY., 1500 mm (59 in)
20	435505A1	2	PIN, 1-3/4 x 7-1/4
21	435506A1	2	PIN, 1-3/4 x 9-1/4
22	435501A1	4	SPACER,
23	86624189	4	WASHER, 21/32" x 1 5/16" x .150", 21/32 x 1-5/16 x 5/32
24	374835	4	BOLT, Hex, M16 x 40, 10.9, Hex, M16 x 40, 10.9
25	242563A1	1	CLAMP,
26	337475	1	NUT, M12, Cl 10,
27	86639057	2	ELBOW, 45є, 13/16"-16 ORFS x M27 x 2 ORB, 45, M12 fc sl x 27 orb, Inc. 28, 29
28	86639045	2	O-RING, Cl 6, 23.6MM ID x 2.9 Thk, 23.6 ID x 2.9
30	327460A2	1	HOSE ASSY., 2285 mm (90 in), LH Cylinder
31	418811A1	1	HOSE ASSY., 2698 mm (106 in), RH Cylinder, BSN RVS001940
31	87415314	1	HOSE ASSY., 2648 mm (104-1/4 in), RH Cylinder, ASN RVS001940
32	84042348	2	BOLT, Hex, M8 x 70, 10.9, Cap, CL 10.9, M8 x 1.25 x 70
33	409612A2	1	TUBE ASSY., Return
34	435413A1	1	HOSE, 114 mm (4-1/2 in)
35	86624194	2	CLAMP, HOSE, #36, 1.81/2.75 Type F Worm, 1-13/16 - 2-3/4
36	9992069	2	O-RING, -016, 90 Duro, .614" ID x .070" Thk,
37	86637979	6	CLAMP, 13/16", Insul, 3/8" Bolt, P-type
38	435470A1	4	CLAMP,
39	435468A1	4	PLATE,
40	364967A1	1	TEE, M18 orb, Inc. 41, 42
41	86639043	1	O-RING, 15.3 ID x 2.2
	178889A1	1	FITTING, Diagnostic, Inc. 43, 44
43	86502604	1	DUST CAP, Dust
44	NSS	1	NOT SERVICED SEPARATELY, Fitting, Diagnostic, Inc. 45
45	86639042	1	O-RING, Cl 6, 11.3MM ID x 2.2 Thk, 11.3 ID x 2.2
47	412123	1	WASHER, LOCK, M12,

ссылка	Номер детали	Кол-во	Описание
48	43362	1	NUT, M8, Cl 10,
49	394446A1	1	PLATE, , ASN RVS001940
50	86990421	1	BRACKET, SUPPORTING, , ASN RVS001940
51	L50641	1	CONNECTING STRIP, Plate, ASN RVS001940
52	86625263	10	WASHER, M8 x 20 x 1.6,
53	43235	5	BOLT, Hex, M8 x 30, 10.9, M8 x 30, CL10.9
54	412250	5	NUT, LOCK, M8 x 1.25, Cl 8,
55	84989383	1	ELBOW, 90є, 13/16"-16 ORFS x 13/16"-16 Fem Sw, 90, 13/16 fc sl, Inc. 12
56	383586A1	1	HOSE ASSY., Steering Return to Piston Pump, BSN RVS001940
56	87418149	1	HOSE ASSY., Steering Return to Piston Pump, 1416 mm (55-3/4 in), ASN RVS001940
57	86637979	1	CLAMP, 13/16", Insul, 3/8" Bolt,
58	86637996	1	CLAMP, 1 1/8", Insul, 3/8" Bolt,
59	515-23222	1	CLAMP, 7/8", Insul, 3/8" Bolt,
60	86628564	1	CLAMP, 1 1/4", Insul, 3/8" Bolt,
61	327459A1	1	HOSE ASSY., 1350 mm (53 in), Steering Control to Priority Valve
10	9993141	1	O-RING, -012, 90 Duro, .364" ID x .070" Thk,
12	9992298	4	O-RING, -014, 90 Duro, .489" ID x .070" Thk,
18	9992298	3	O-RING, -014, 90 Duro, .489" ID x .070" Thk,
29	9992298	2	O-RING, -014, 90 Duro, .489" ID x .070" Thk,
42	9992298	1	O-RING, -014, 90 Duro, .489" ID x .070" Thk,
46	9992298	1	O-RING, -014, 90 Duro, .489" ID x .070" Thk,

05 -02 CYLINDER ASSY - ARTICULATION

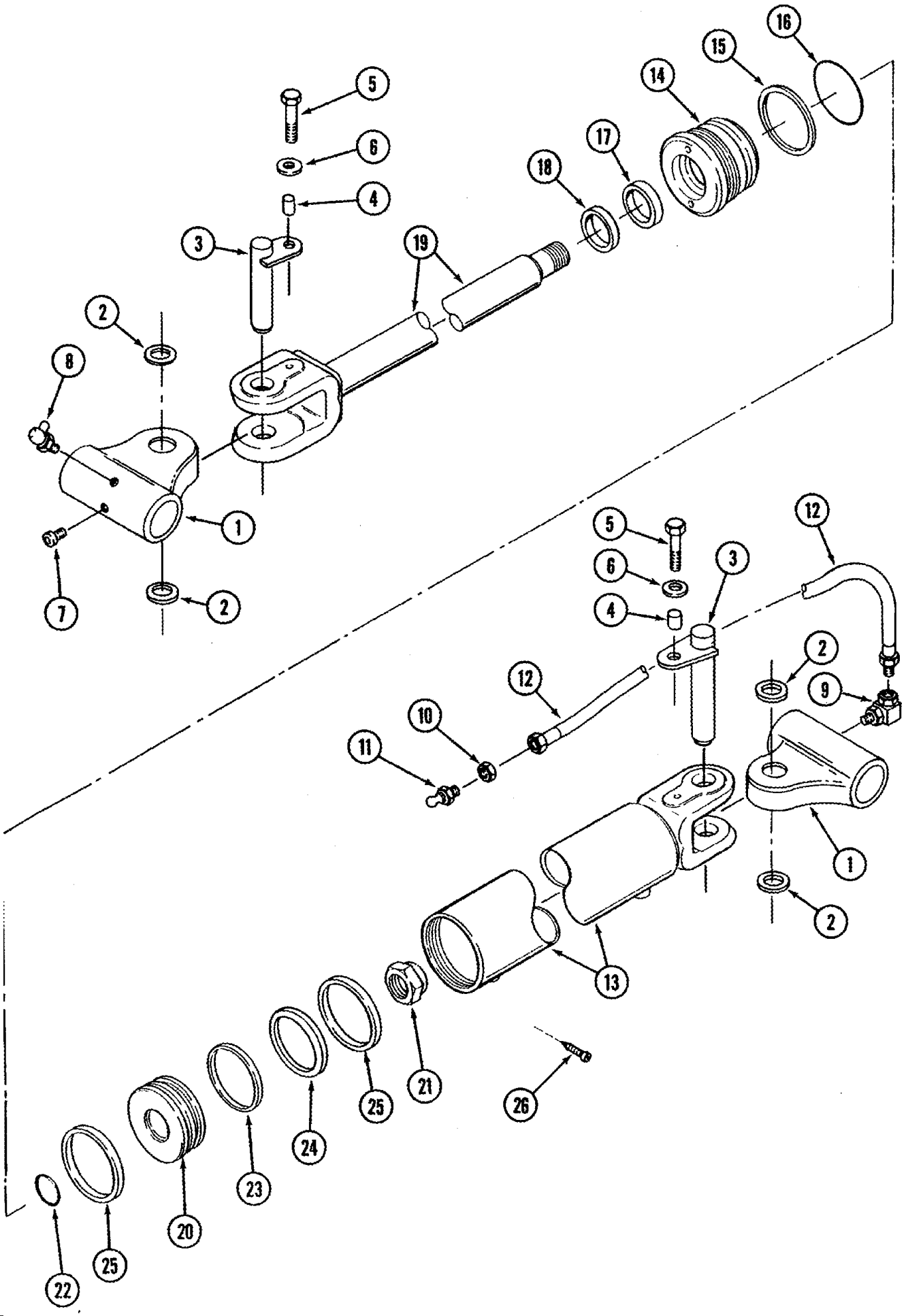

TJ375 TRACTOR - Steering System

05 -02 CYLINDER ASSY - ARTICULATION

ссылка	Номер детали	Кол-во	Описание
1	409685A1	2	JOINT,
2	D95143	8	SEAL,
3	435504A1	2	PIN,
4	435501A1	2	SPACER,
5	86529976	2	BOLT, Hex, M16 x 35, 10.9, M6 x 35; 10.9
6	86625266	2	WASHER, M17.5 x 30 x 4, HT,
7	86637724	2	PLUG, Hex Soc, 1/8"-27 NPTF, Hex Socket, 1/8 PT
8	80717	1	NIPPLE, LUBE, 45є, 1/8" NPT x 7/8" lg, 45 deg, 1/8 PT x 7/8
9	84015293	1	ELBOW, 90є, 1/8"-27 Female x 1/8"-27 Male, 90, 1/8 PT x fem PT
10	F53473	1	NUT,
11	86636814	1	NIPPLE, LUBE, 1/4"-28 x .52" lg, 1/4 x 1/2 special, Grease
12	1339090C1	1	HOSE, 838 mm (33 in)
	339832A1	1	CYLINDER, Articulation, Inc. 13 - 26, BSN RVS003801
	406999A1	1	CYLINDER STEERING, Inc. 13 - 26, ASN RVS003801
13	NSS	1	NOT SERVICED SEPARATELY, Barrel
14	387652A1	1	CAP CYLINDER END,
15	NSS	1	NOT SERVICED SEPARATELY, Ring
16	NSS	1	NOT SERVICED SEPARATELY, O-Ring
17	NSS	1	NOT SERVICED SEPARATELY, Seal
18	NSS	1	NOT SERVICED SEPARATELY, Wiper
19	387650A1	1	ROD, PISTON,
20	387648A1	1	PISTON,
21	86016798	1	NUT, LOCK, 1 1/4"-12, GC, Lock, 1-1/4 NF
22	NSS	1	NOT SERVICED SEPARATELY, O-Ring
23	NSS	1	NOT SERVICED SEPARATELY, Ring, Piston
24	NSS	1	NOT SERVICED SEPARATELY, Seal, Piston
25	NSS	2	NOT SERVICED SEPARATELY, Ring, Wear
26	NSS	1	NOT SERVICED SEPARATELY, Screw
	387654A1	1	PACKAGE, SEALS, Inc. 15 - 18, 22 - 26

05 -03 STEERING CONTROL VALVE

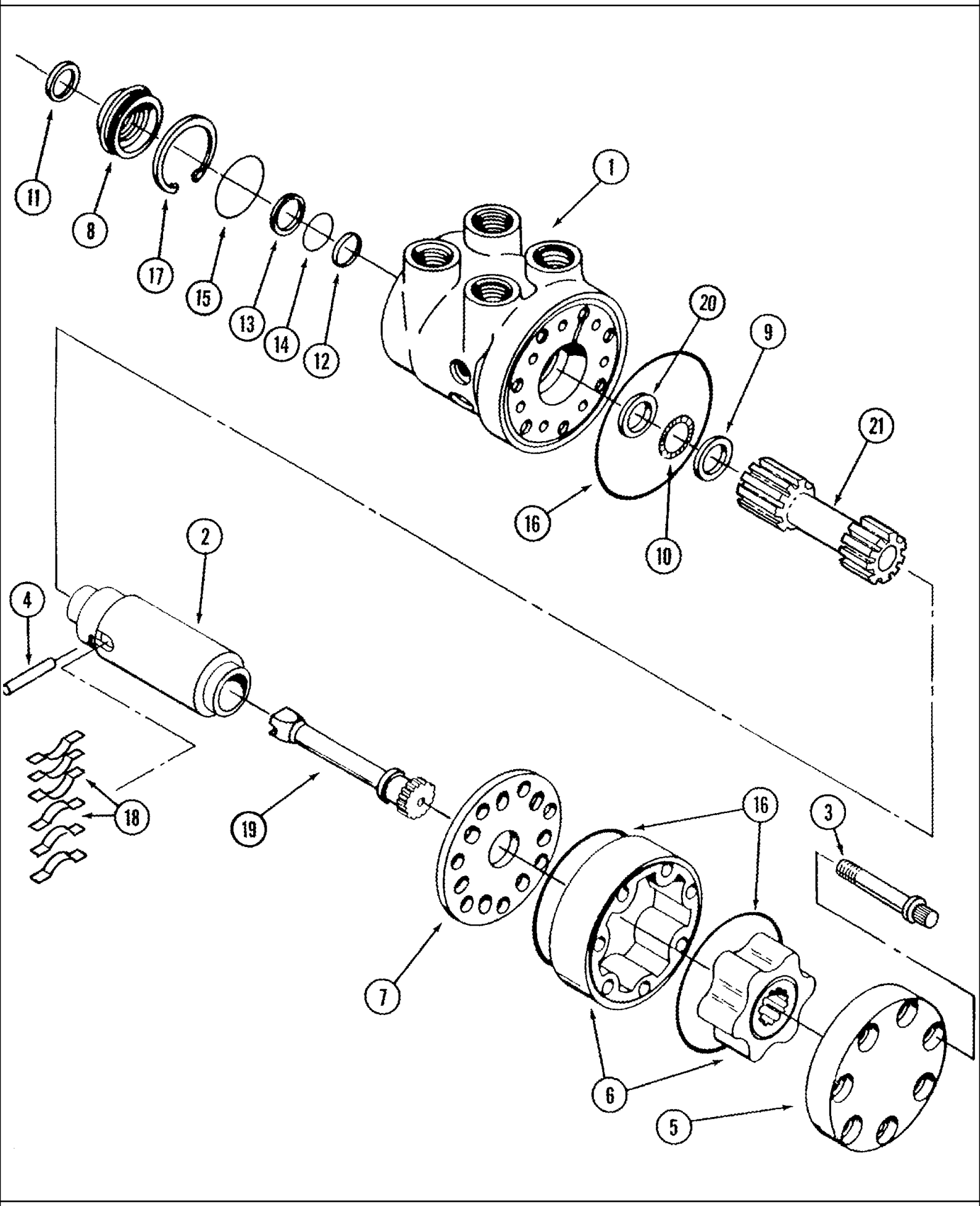

TJ375 TRACTOR - Steering System

05 -03 STEERING CONTROL VALVE

ссылка	Номер детали	Кол-во	Описание
	373374A2	1	VALVE, CONTROL, Steering Control, Inc. 1 - 21
1	NSS	1	NOT SERVICED SEPARATELY, Housing
2	NSS	1	NOT SERVICED SEPARATELY, Sleeve
3	S302004	7	BOLT, 12 point
4	S301999	1	PIN,
5	443094A1	1	CAP, End
6	443095A1	1	ROTOR ASSY., Set
7	443092A1	1	PLATE, WEAR, Spacer
8	443098A1	1	RETAINER, SEAL,
9	D82804	1	RACE,
10	G13609	1	BEARING, THRUST, Needle
11	443076A1	1	SEAL, Input
12	N13313	1	SEAL, Teflon
13	400703A1	1	KIT, Backup
14	9825518	1	O-RING, -121, 70 Duro, 1.049" ID x .103" Thk, 1-1/6 ID x 3/32
15	400703A1	1	KIT,
16	400703A1	3	KIT,
17	86642418	1	SHIM, Retaining
18	NSS	1	NOT SERVICED SEPARATELY, Spring, Centering
19	443091A1	1	SHAFT, Drive
20	D82804	1	RACE, Bearing
21	NSS	1	NOT SERVICED SEPARATELY, Shaft, Steering
	400702A1	1	KIT, Centering Spring
	400703A1	1	KIT,

05 -04 LOCK ARTICULATION

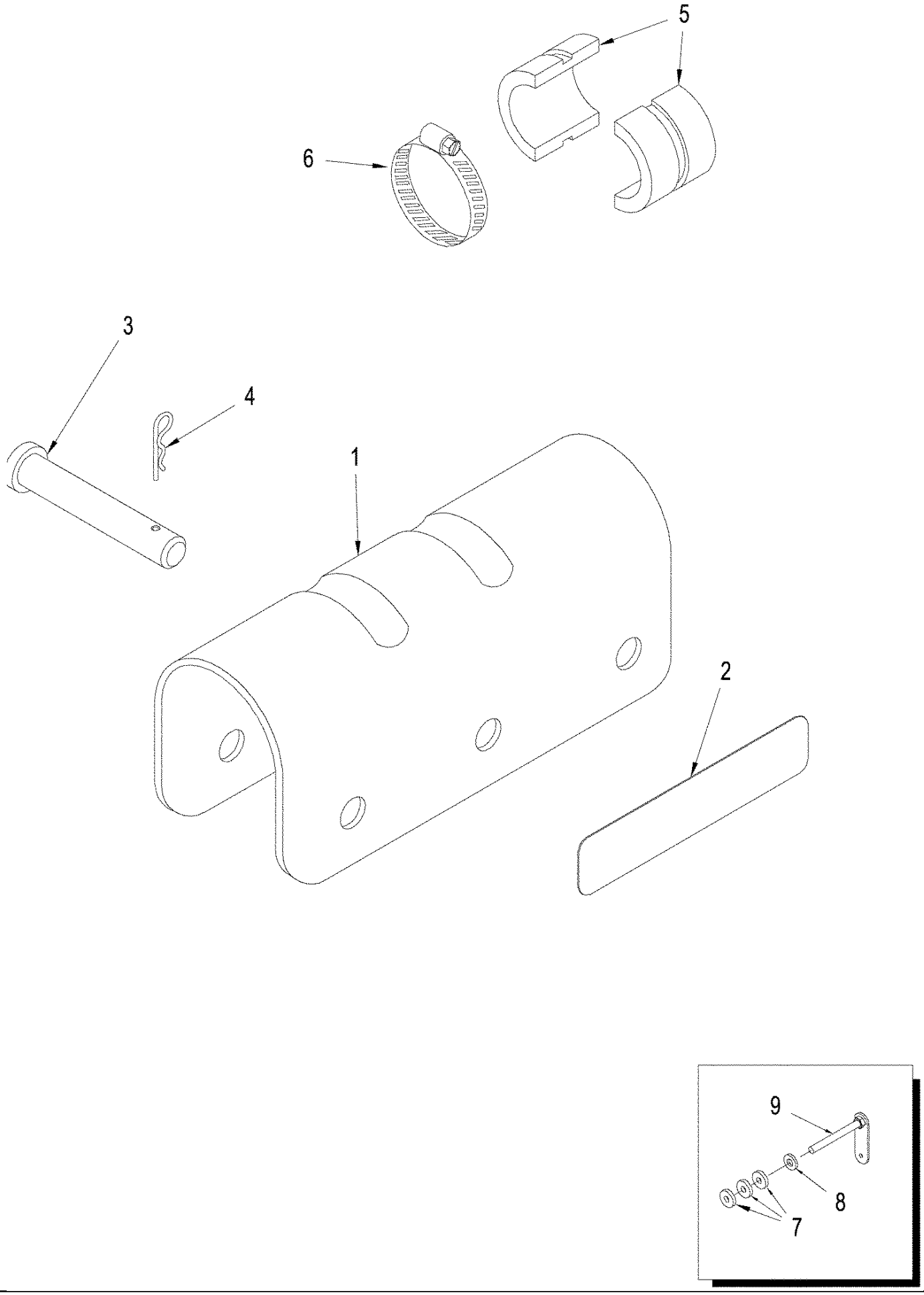

TJ375 TRACTOR - Steering System

05 -04 LOCK ARTICULATION

ссылка	Номер детали	Кол-во	Описание
1	345096A2	1	LOCK, 214mm (8 in), With Stops
1	403817A2	1	LOCK, Without Stops
1	344882A2	1	LOCKING-DEVICE, , Scraper Model
2	435416A1	1	DECAL,
3	86637938	1	PIN, CLEVIS, 1/2" x 3 1/4", Clevis, 1/2 x 3-1/2
4	435425A1	1	PIN, 1/8
5	370865A1	4	STOP, Articulation
6	86625034	2	CLAMP, HOSE, #64, 3.56/4.50 Type F Worm, 3-9/16 - 4-1/2 in dia.
7	321232A1	2	BUSHING,
8	896-15012	1	WASHER, M12 x 28.5 x 4, HT,
9	406390A1	1	HANDLE, Mounting, Articulation Lock

05 -05 STEERING WHEEL AND COLUMN

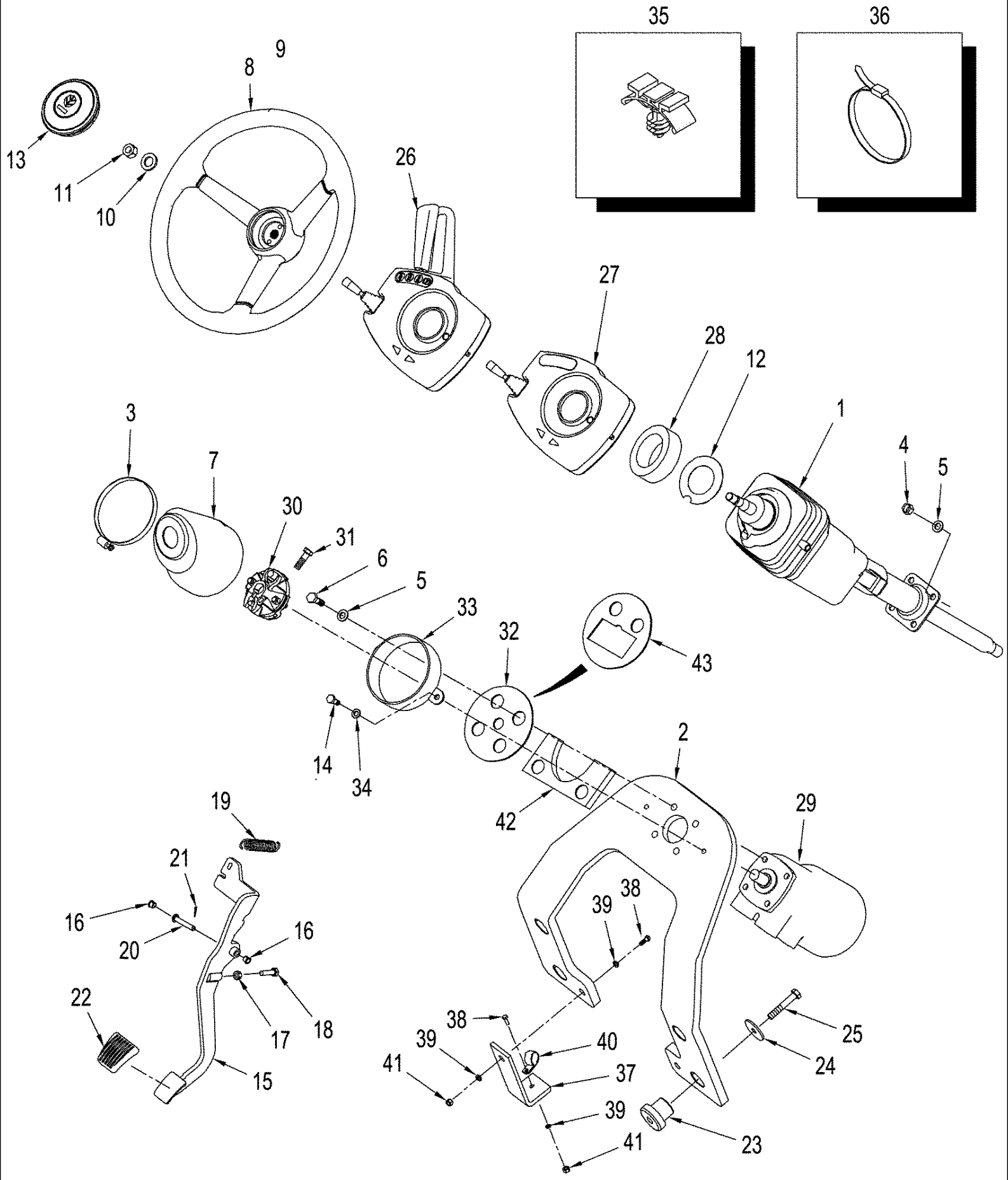

05 -05 STEERING WHEEL AND COLUMN

ссылка	Номер детали	Кол-во	Описание
1	86983411	1	STEERING COLUMN, See Figure: 05-06
2	379596A4	1	SUPPORT,
3	86637707	1	CLAMP, HOSE, #80, 4.62/5.50 Type F Worm, W/liner,
4	86500689	4	NUT, M10, Cl 10, M10; 10.9
5	86624176	8	WASHER, M10 x 20 x 2, M10
6	9515003	4	BOLT, Hex, M10 x 30, 10.9, Full Thd,
7	373193A1	1	NO DESCRIPTION, Boot
8	224818A3	1	STEERING WHEEL, , Standard Cab
9	301200A1	1	WHEEL (STEERING), , Deluxe Cab
10	86625266	1	WASHER, M17.5 x 30 x 4, HT,
11	86639148	1	NUT, M14 x 1.5, Cl 8, M14
12	1977448C2	1	WASHER,
13	399142A1	1	CAP,
14	43233	2	BOLT, Hex, M8 x 20, 10.9, Cap, HH, CL 10.9, M8 x 1.25 x 20
15	311748A3	1	PEDAL,
16	282892A1	2	BUSHING, Nylon
17	86639231	1	NUT, M8, Cl 10, M8
18	86637961	1	BOLT, Hex, M8 x 30, 8.8, Full Thd, M8 x 30
19	311812A1	1	SPRING,
20	86639111	1	PIN, CLEVIS, M8 x 45, M8 x 45
21	86639115	1	PIN, SPLIT (COTTER), M2 x 12, Cotter, M2 x 12
22	323657A1	1	PAD,
23	A59514	4	BUSHING, RUBBER,
24	86637950	4	WASHER, 13/32" x 1 3/4" x .120", 13/32 x 1-3/4 x 1/8
25	86639030	4	BOLT, Hex, M10 x 70, 10.9, Full Thd, M10 x 70; 10.9
26	360058A1	1	CONTROL, Transmission, See Figure : 05-07 (2), With Power Shift Transmission, Without Self Cancel
26	376785A2	1	CONTROL, Transmission, See Figure : 05-07 (2), With Power Shift Transmission, With Self Cancel
27	414331A1	1	CONTROL, Transmission, See Figure: 05-07 [1], With Manual Shift Transmission, Without Self Cancel
27	414332A1	1	CONTROL, Transmission, See Figure: 05-07 [1], With Manual Shift Transmission, With Self Cancel
28	253679A1	1	RING, , With Self Cancel
29	373374A2	1	VALVE, CONTROL, Steering, See Figure: 05-03
30	L100096	1	COUPLING,
31	7807271	2	SCREW, Lock, 12 pt.
32	86983451	1	SEAL,
33	373194A1	1	HOUSING, Boot
34	86624184	2	WASHER, M8 x 16 x 1.6, 9 x 17 x 1.6 mm
35	392699A1	1	FASTENER, Tree
36	435437A1	1	STRAP, CABLE, Cable
37	87435635	1	BRACKET,
38	9824642	2	BOLT, Hex, M12 x 35, 10.9,
39	86624177	4	WASHER, M12 x 24 x 2.5, 13.5 x 24 x 2.5 mm
40	86625038	1	CLAMP, 1", Insul, 1/2" Bolt,
41	337475	2	NUT, M12, Cl 10,
42	450945A1	1	STOP DEVICE, Pump Shaft
43	86983451	1	SEAL, If Used

TJ375 TRACTOR - Steering System

05 -06 STEERING COLUMN

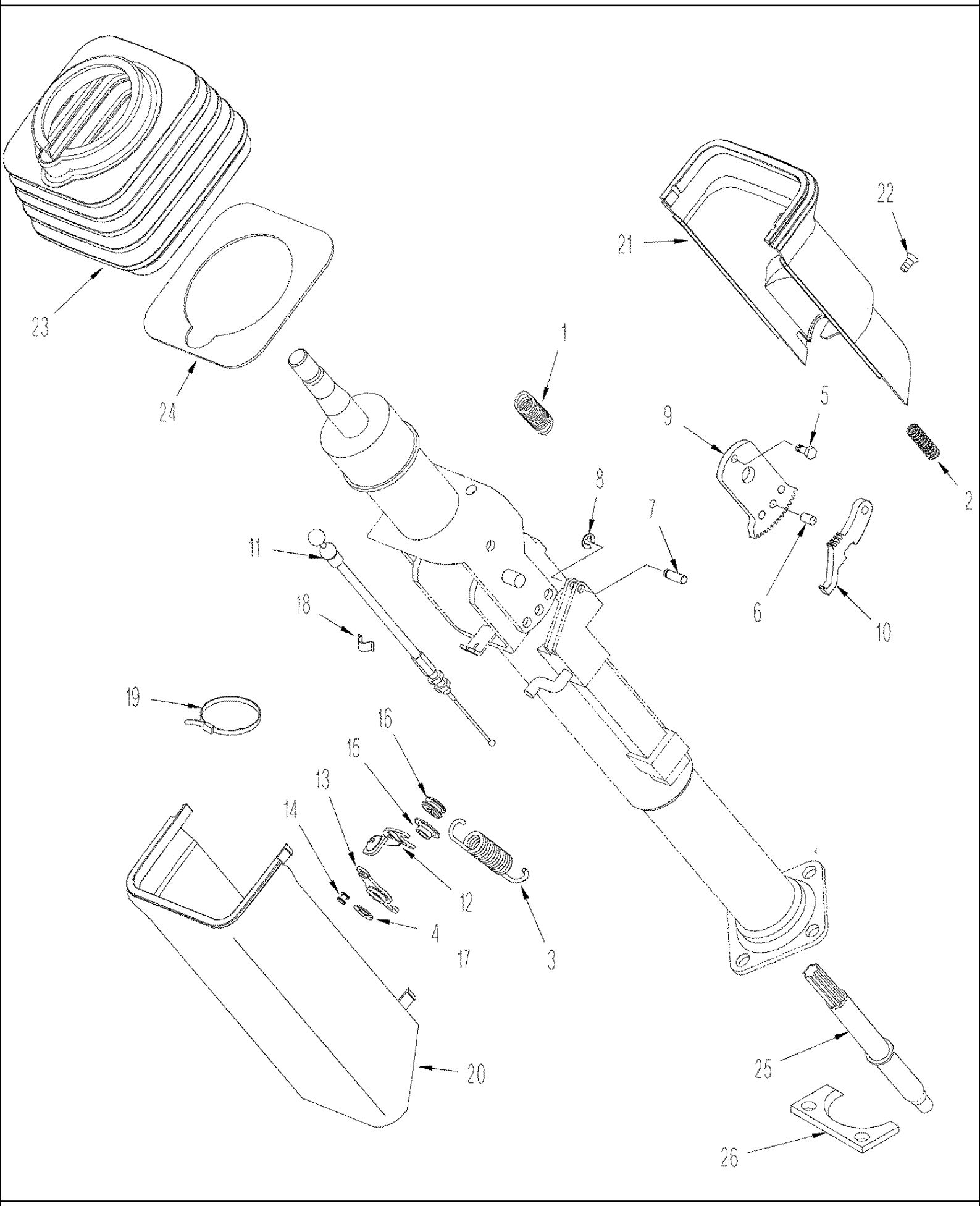

05 -06 STEERING COLUMN

ссылка	Номер детали	Кол-во	Описание
	86983411	1	STEERING COLUMN, Inc. 1 - 25
	389979A2	1	PACKAGE, REPAIR, Column Springs, Inc. 1 - 4
1	NSS	2	NOT SERVICED SEPARATELY, Spring, Tilt Return
2	NSS	1	NOT SERVICED SEPARATELY, Spring
3	NSS	1	NOT SERVICED SEPARATELY, Spring, Telescoping
4	NSS	1	NOT SERVICED SEPARATELY, Clip
	318942A1	1	SET OF PARTS, Repair, Tilt Locking, Inc. 5 - 10
5	NSS	3	NOT SERVICED SEPARATELY, Bolt
6	NSS	1	NOT SERVICED SEPARATELY, Pin, Dowel
7	NSS	1	NOT SERVICED SEPARATELY, Pin
8	NSS	1	NOT SERVICED SEPARATELY, Clip
9	NSS	3	NOT SERVICED SEPARATELY, Plate, Tilt Position
10	NSS	1	NOT SERVICED SEPARATELY, Catch
	389889A2	1	PACKAGE, REPAIR, Release, Lever Device, Inc. 11 - 19
11	NSS	1	NOT SERVICED SEPARATELY, Cable
12	NSS	1	NOT SERVICED SEPARATELY, Lever, Upper Release
13	NSS	1	NOT SERVICED SEPARATELY, Lever, Lower Release
14	NSS	1	NOT SERVICED SEPARATELY, Rivet
15	NSS	1	NOT SERVICED SEPARATELY, Bushing
16	NSS	1	NOT SERVICED SEPARATELY, Bushing
17	NSS	1	NOT SERVICED SEPARATELY, Clip
18	NSS	1	NOT SERVICED SEPARATELY, Holder
19	NSS	1	NOT SERVICED SEPARATELY, Strap
	284997A1	1	PACKAGE, REPAIR, Column, Cover, Inc. 20 - 22
20	NSS	1	NOT SERVICED SEPARATELY, Cover, Lower
21	NSS	1	NOT SERVICED SEPARATELY, Cover, Upper
22	NSS	1	NOT SERVICED SEPARATELY, Screw
	445980A1	1	PACKAGE, SERVICE, Repair, Bellows, Inc. 23 - 25
23	NSS	1	NOT SERVICED SEPARATELY, Boot
24	NSS	1	NOT SERVICED SEPARATELY, Plate
25	NSS	1	NOT SERVICED SEPARATELY, Shaft, Lower
26	450945A1	1	STOP DEVICE,

05 -07(1) TRANSMISSION CONTROL ASSY - MANUAL SHIFT TRANSMISSION

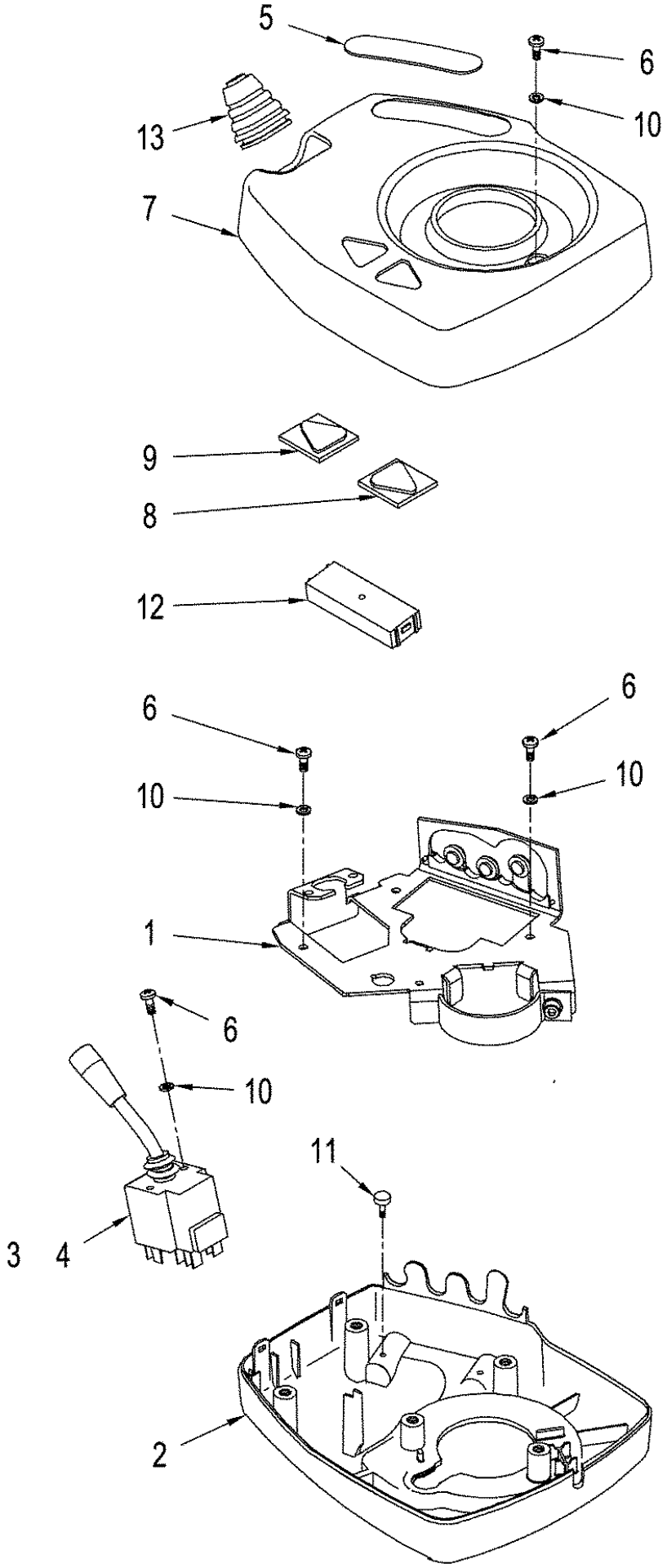

05 -07(1) TRANSMISSION CONTROL ASSY - MANUAL SHIFT TRANSMISSION

ссылка	Номер детали	Кол-во	Описание
	414332A1	1	CONTROL, Transmission, Inc. 1 - 3, 5 - 10, 12 & 13, With Self Cancel
	414331A1	1	CONTROL, Transmission, Inc. 1, 2, 4 - 10, 12, 13, Without Self Cancel
1	325362A1	1	CHASSIS,
2	NSS	1	NOT SERVICED SEPARATELY, Housing, Lower
3	284777A1	1	SWITCH, , With Self Cancel
4	284776A1	1	SWITCH, , Without Self Cancel
5	414330A1	1	DECAL,
6	86585706	7	SCREW, Cross Pan Hd, M4 x 10,
7	NSS	1	NOT SERVICED SEPARATELY, Housing, Upper
8	303466A1	1	SYMBOLS, Right-Hand
9	303467A1	1	SYMBOLS, Left-Hand
10	86639307	7	WASHER, Lock, M4
11	905974R1	2	SCREW, SELF TAPPING, Pan Hd, M2.9 x 13,
12	303465A2	1	LAMP, Flasher, With Self Cancel
13	325068A1	1	BELLOWS,

05 -07(2) TRANSMISSION CONTROL ASSY - POWER SHIFT TRANSMISSION

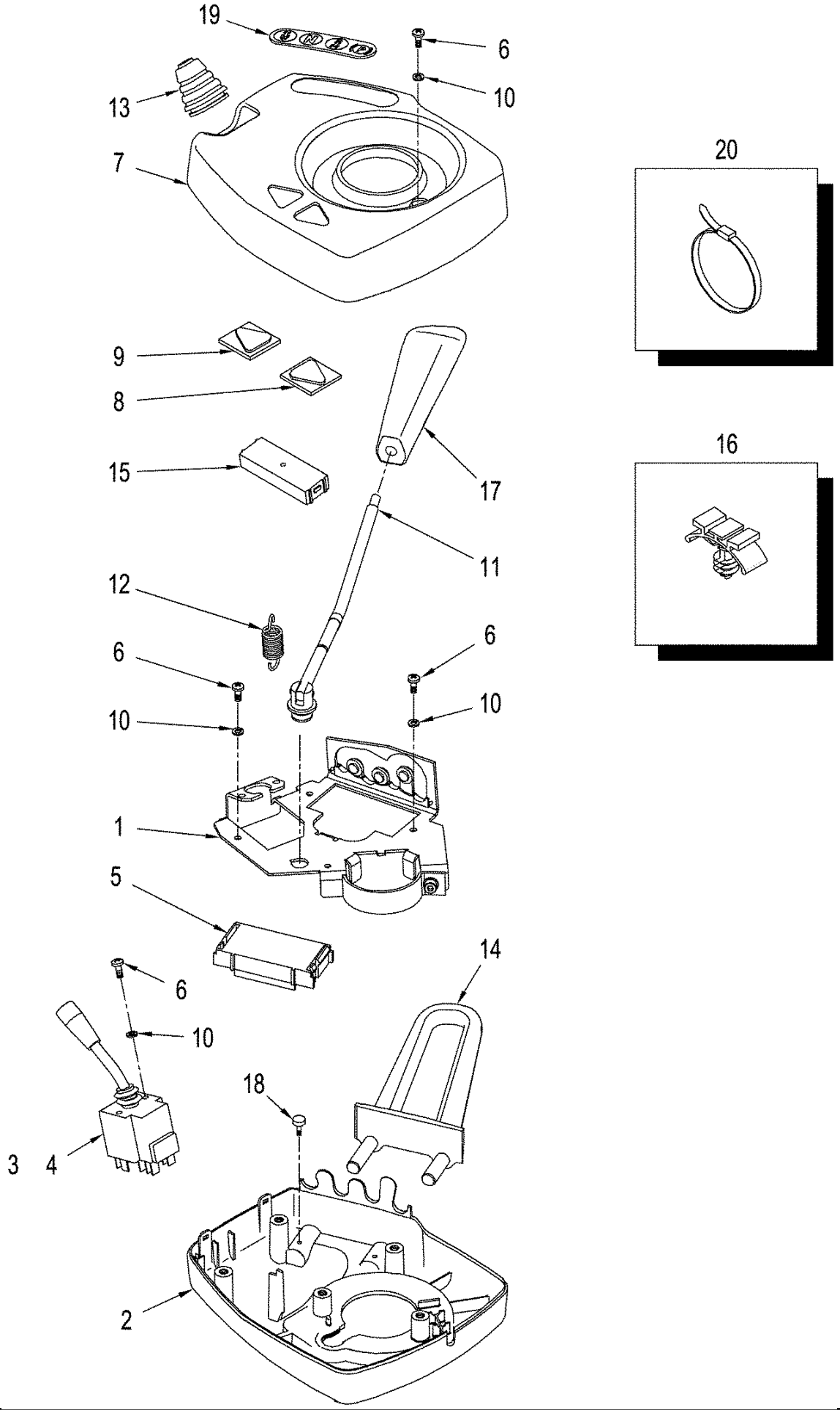

05 -07(2) TRANSMISSION CONTROL ASSY - POWER SHIFT TRANSMISSION

ссылка	Номер детали	Кол-во	Описание
	86991898	1	CONTROL, Transmission, Inc. 1 - 3, 5 - 15, 17 - 19, With Self Cancel
	360058A2	1	CONTROL, Transmission, Inc. 1, 2, 4 - 15, 17 - 19, Without Self Cancel
1	325362A1	1	CHASSIS,
2	325065A1	1	HOUSING, Lower
3	284777A1	1	SWITCH, , With Self Cancel
4	284776A1	1	SWITCH, , Without Self Cancel
5	86991897	1	SWITCH, FNRP, Without Nuetral Start
6	86585706	7	SCREW, Cross Pan Hd, M4 x 10,
7	325064A1	1	HOUSING, Upper
8	303466A1	1	SYMBOLS, Right-Hand
9	303467A1	1	SYMBOLS, Left-Hand
10	86639307	7	WASHER, Lock, M4
11	325363A1	1	LEVER,
12	250939A1	1	SPRING,
13	325068A1	1	BELLOWS,
14	325066A2	1	GUARD,
15	303465A2	1	LAMP, Flasher
15	404053A1	1	LAMP, Flasher, Without Self Cancel
16	392699A1	1	FASTENER,
17	325533A1	1	HANDLE,
18	905974R1	2	SCREW, SELF TAPPING, Pan Hd, M2.9 x 13,
19	358353A1	1	SYMBOLS, FNRP
20	435437A1	1	STRAP, CABLE, 7 in

05 -08 INTELLISTEER - HYDRAULIC, STEERING

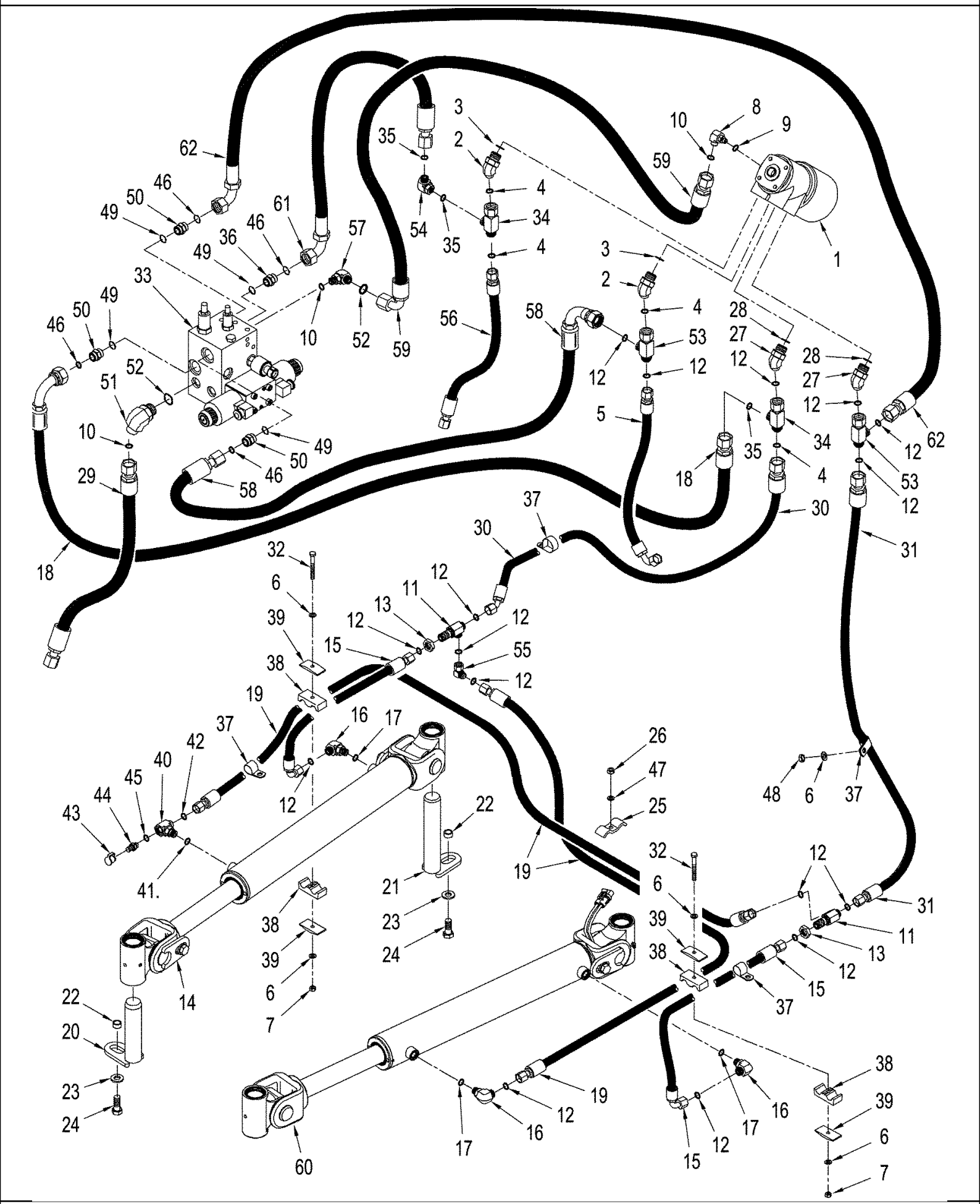

TJ375 TRACTOR - Steering System

05 -08 INTELLISTEER - HYDRAULIC, STEERING

ссылка	Номер детали	Кол-во	Описание
1	373374A2	1	VALVE, CONTROL, Steering, See Figure : 05-03
2	86639056	2	ELBOW, 45є, 13/16"-18 ORFS x M18 x 1.5 ORB, 45, M20 fc sl x 27 orb, Inc. 3, 4
3	86639045	3	O-RING, Cl 6, 23.6MM ID x 2.9 Thk, 23.6 ID x 2.9
4	9991976	3	O-RING, -018, 90 Duro, .739" ID x .070" Thk,
5	327494A1	1	HOSE ASSY., 1240 mm (49 in), Supply, From Priority Valve, BSN RVS001940
5	87415315	1	HOSE ASSY., 1240 mm (48-13/16 in), Supply, From Priority Valve, ASN RVS001940
6	86624184	6	WASHER, M8 x 16 x 1.6, 9 x 17 x 1.6 mm
7	86528579	9	NUT, LOCK, M8 x 1.25, Cl 10,
8	86580178	1	ELBOW, 90є, 11/16"-18 ORFS x M12 x 1.5 ORB, 90, 11/16 fc sl x 12 Or, Inc. 9, 10
9	86642448	1	O-RING, Cl 6, 9.3MM ID x 2.2 Thk, 9.3 ID x 2.2
10	9993141	1	O-RING, -012, 90 Duro, .364" ID x .070" Thk,
11	86639080	2	TEE, 13/16"-16 ORFS, Blkd Run, M12 fc sl x blkhd fc sl, Inc. 12
12	9992298	9	O-RING, -014, 90 Duro, .489" ID x .070" Thk,
13	86639083	2	NUT, LOCK, 13/16"-16, ORFS Blkhd, 13/16 in
14	339832A1	1	CYLINDER, Articulation, See Figure: 05-02, BSN RVS003801
14	406999A1	1	CYLINDER STEERING, Articulation, See Figure: 05-02, ASN RVS003801
15	367244A1	2	HOSE, 550 mm (21-1/2 in)
16	86579691	3	ELBOW, 90є, 13/16"-18 ORFS x M18 x 1.5 ORB, Includes 17, 12
17	86639043	3	O-RING, 15.3 ID x 2.2
18	87440935	1	HOSE ASSY., 914 mm 936 in)
19	367243A1	2	HOSE ASSY., 1500 mm (59 in)
20	435505A1	2	PIN, 1-3/4 x 7-1/4
21	435506A1	2	PIN, 1-3/4 x 9-1/4
22	435501A1	4	SPACER,
23	86624189	4	WASHER, 21/32" x 1 5/16" x .150", 21/32 x 1-5/16 x 5/32
24	374835	4	BOLT, Hex, M16 x 40, 10.9, Hex, M16 x 40, 10.9
25	242563A1	1	CLAMP,
26	337475	1	NUT, M12, Cl 10,
27	86639057	2	ELBOW, 45є, 13/16"-16 ORFS x M27 x 2 ORB, 45, M12 fc sl x 27 orb, Inc. 28, 12
28	86639045	2	O-RING, Cl 6, 23.6MM ID x 2.9 Thk, 23.6 ID x 2.9
29	87415320	1	HOSE ASSY., 1350 mm (53 in)
30	327460A2	1	HOSE ASSY., 2285 mm (90 in), LH Cylinder
31	418811A1	1	HOSE ASSY., 2698 mm (106 in), RH Cylinder, BSN RVS001940
31	87415314	1	HOSE ASSY., 2648 mm (104-1/4 in), RH Cylinder, ASN RVS001940
32	84042348	2	BOLT, Hex, M8 x 70, 10.9, Cap, CL 10.9, M8 x 1.25 x 70
33	REF	1	INSTRUCTION, Manifold / Steering, See Figure: 05-10
34	47112249	2	TEE, 1-3/16 fc sl x swl, Inc. 4, 35
35	9991976	2	O-RING, -018, 90 Duro, .739" ID x .070" Thk,
36	9621483	2	CONNECTOR, HYD., 1"-14 ORFS x 7/8"-14 ORB, 1 fc sl x 7/8 or, Inc. 46, 49
37	86637979	6	CLAMP, 13/16", Insul, 3/8" Bolt, P-type
38	435470A1	4	CLAMP,
39	435468A1	4	PLATE,
40	364967A1	1	TEE, M18 orb, Inc. 41, 42
41	86639043	1	O-RING, 15.3 ID x 2.2
	178889A1	1	FITTING, Diagnostic, Inc. 43, 44

05 -08 INTELLISTEER - HYDRAULIC, STEERING

ссылка	Номер детали	Кол-во	Описание
42	9992298	1	O-RING, -014, 90 Duro, .489" ID x .070" Thk,
43	86502604	1	DUST CAP, Dust
44	NSS	1	NOT SERVICED SEPARATELY, Fitting, Diagnostic, Inc. 45
45	86639042	1	O-RING, Cl 6, 11.3MM ID x 2.2 Thk, 11.3 ID x 2.2
46	9992069	1	O-RING, -016, 90 Duro, .614" ID x .070" Thk,
47	412123	1	WASHER, LOCK, M12,
48	43362	1	NUT, M8, Cl 10,
49	167269	1	O-RING, 10-1, 90 Duro, .755" ID x .097" Thk, 3/64 ID x 3/32 Thk
50	9840531	2	CONNECTOR, HYD., 13/16 fc sl x 7/8 or, Inc. 46, 49
51	87301497	1	ELBOW, 45є, 11/16"-16 x 7/16"-20. Adj, ORFS, 45, 11/16 fc sl x 7/16 or, Inc. 10, 52
52	165202	1	O-RING, 4-1, 90 Duro, .351" ID x .072" Thk,
53	86624132	2	TEE, 13/16"-16 ORFS x 13/16"-16 Sw Run, Tee, 13/16 fc sl x swl, Inc. 46
54	86018579	1	ELBOW, 90, 1-13/16 fc sl x swl, Inc. 35
55	84989383	1	ELBOW, 90є, 13/16"-16 ORFS x 13/16"-16 Fem Sw, 90, 13/16 fc sl, Inc. 12
56	87418149	1	HOSE ASSY., Steering Load Sense, 1416 mm (55-3/4 in)
57	201-311	1	ELBOW, 90є, 11/16"-16 x 7/16"-20, Adj, ORFS, 90, 1-13/16 fc sl x swl, Inc. 35
60	87429557	1	CYLINDER, Articulation, with Sensor, See Figure: 05-09
58	87440933	1	HOSE ASSY., 914 mm (36 in)
59	87440932	1	HOSE ASSY., 368 mm (14-1/2 in)
61	87440934	1	HOSE ASSY., 914 mm (36 in)
62	87310965	1	HOSE ASSY., 734 mm (29 in)

05-09 INTELLISTEER - CYLINDER ASSY., ARTICULATION, WITH SENSOR

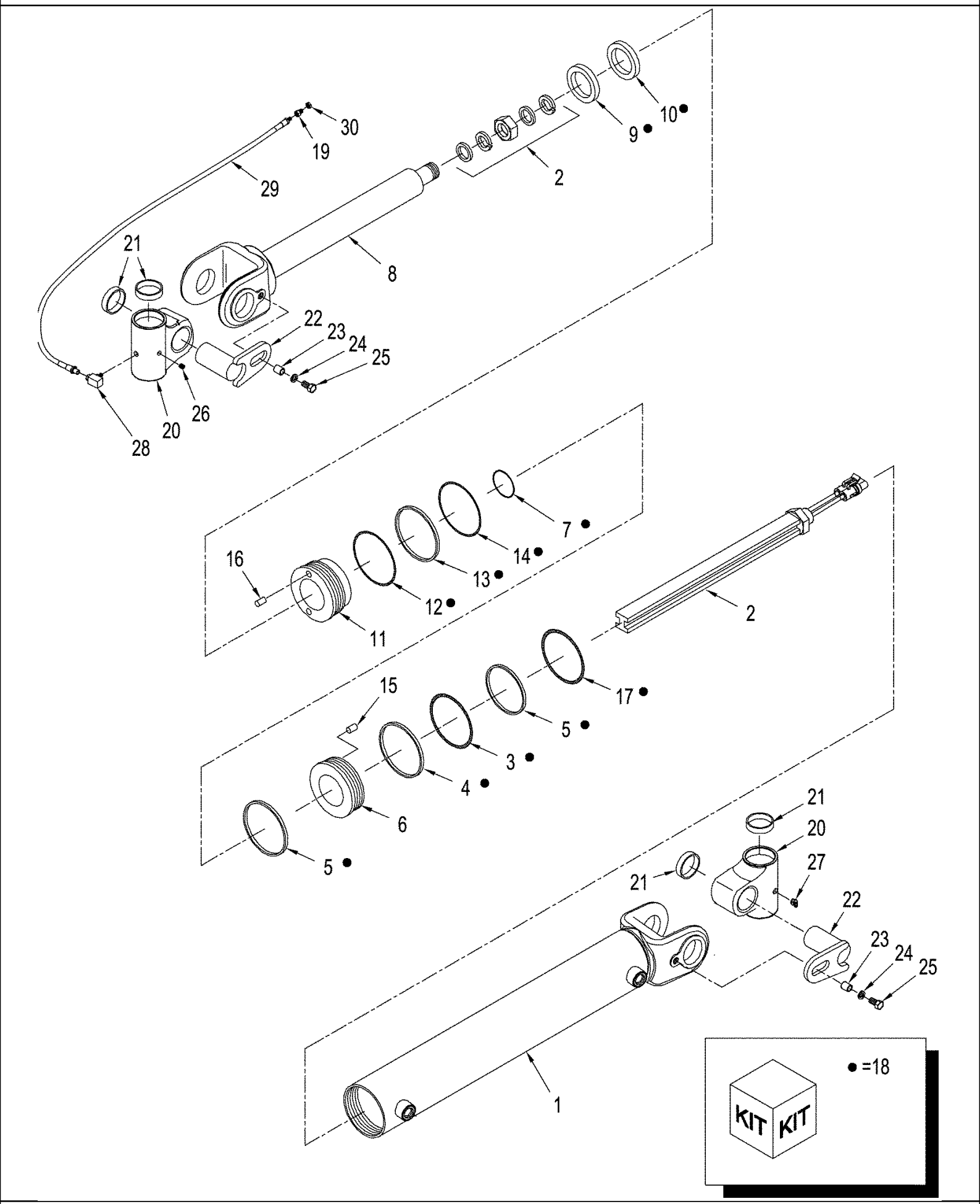

TJ375 TRACTOR - Steering System

05-09 INTELLISTEER - CYLINDER ASSY., ARTICULATION, WITH SENSOR

ссылка	Номер детали	Кол-во	Описание
	87429557	1	CYLINDER, Inc. 1 - 18
1	87436214	1	CASE ASSY., Barrel
2	87407429	1	SENSOR, Rod
3	NSS	1	NOT SERVICED SEPARATELY, O-Ring
4	NSS	1	NOT SERVICED SEPARATELY, SEAL, Piston
5	NSS	2	NOT SERVICED SEPARATELY, RING, Wear
6	87436215	1	PISTON,
7	NSS	1	NOT SERVICED SEPARATELY, O-Ring
8	87436213	1	SHAFT ASSY., Rod
9	NSS	1	NOT SERVICED SEPARATELY, WIPER
10	NSS	1	NOT SERVICED SEPARATELY, SEAL, U-Cup
11	387652A1	1	CAP CYLINDER END,
12	NSS	1	NOT SERVICED SEPARATELY, O-Ring
13	NSS	1	NOT SERVICED SEPARATELY, RING, Backup
14	NSS	1	NOT SERVICED SEPARATELY, O-Ring
15	445440A1	1	SET SCREW, Screw, Set
16	NSS	1	NOT SERVICED SEPARATELY, Screw, Set
17	NSS	1	NOT SERVICED SEPARATELY, O-Ring
18	87397843	1	MAGNET,
19	219-20	1	NIPPLE, LUBE, 1/4"-28 x .52" lg,
20	409685A1	2	JOINT, Knuckle
21	D95143	8	SEAL, Wiper Rod
22	70-6013T2	2	PIN,
23	70-5967T1	2	SPACER,
24	896-11016	2	WASHER, M17.5 x 30 x 4, HT,
25	627-16035	2	BOLT, Hex, M16 x 35, 10.9,
26	217-429	2	PLUG, Hex Soc, 1/8"-27 NPTF,
27	219-36	1	NIPPLE, LUBE, 45є, 1/8" NPT x 7/8" lg,
28	217-1014	1	ELBOW, 90є, 1/8"-27 Female x 1/8"-27 Male,
29	1339090C1	1	HOSE,
30	F53473	1	NUT,
31	87364410	1	CONNECTOR, ELEC, 4 Pin Socket
32	87022296	4	SCREW, Cross Pan Hd, M3 x 8,
33	219-20	1	NIPPLE, LUBE, 1/4"-28 x .52" lg,
34	409685A1	2	JOINT, Knuckle
35	D95143	8	SEAL, Wiper Rod
36	87378215	1	HARNESS, WIRE, Sensor Adaptor

05-10 INTELLISTEER - MANIFOLD / STEERING VALVE & MOUNTING

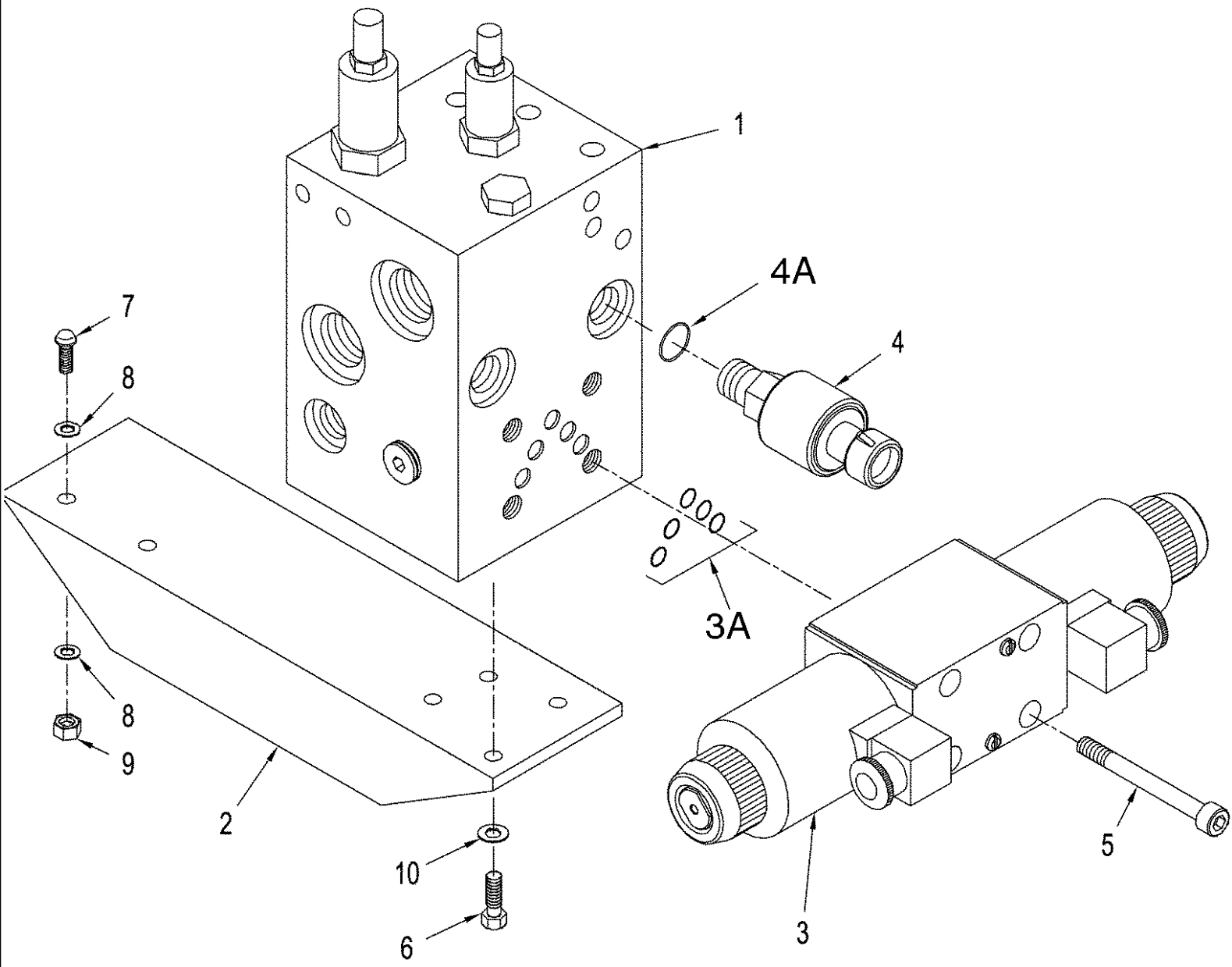

TJ375 TRACTOR - Steering System

05-10 INTELLISTEER - MANIFOLD / STEERING VALVE & MOUNTING

ссылка	Номер детали	Кол-во	Описание
1	87429542	1	MANIFOLD, Valve
2	87429555	1	BRACKET, Mounting
3	87429544	1	VALVE, Steering Guidance
3A	87298240	1	KIT, O-RING, (Set of 10)
4	87428328	1	SENSOR, Pressure, 3000 psi
4A	NSS	1	NOT SERVICED SEPARATELY, O-Ring ID .351/.072" thick/70 Duro
5	14305821	4	SCREW, Hex Soc Hd, M6 x 40, 8.8,
6	374897	4	SCREW, Hex Flat Hd, M8 x 25, 4.8, Flg, M8 x 25; CL4.8

06 -00 CLUTCH PEDAL, MANUAL SHIFT TRANSMISSION

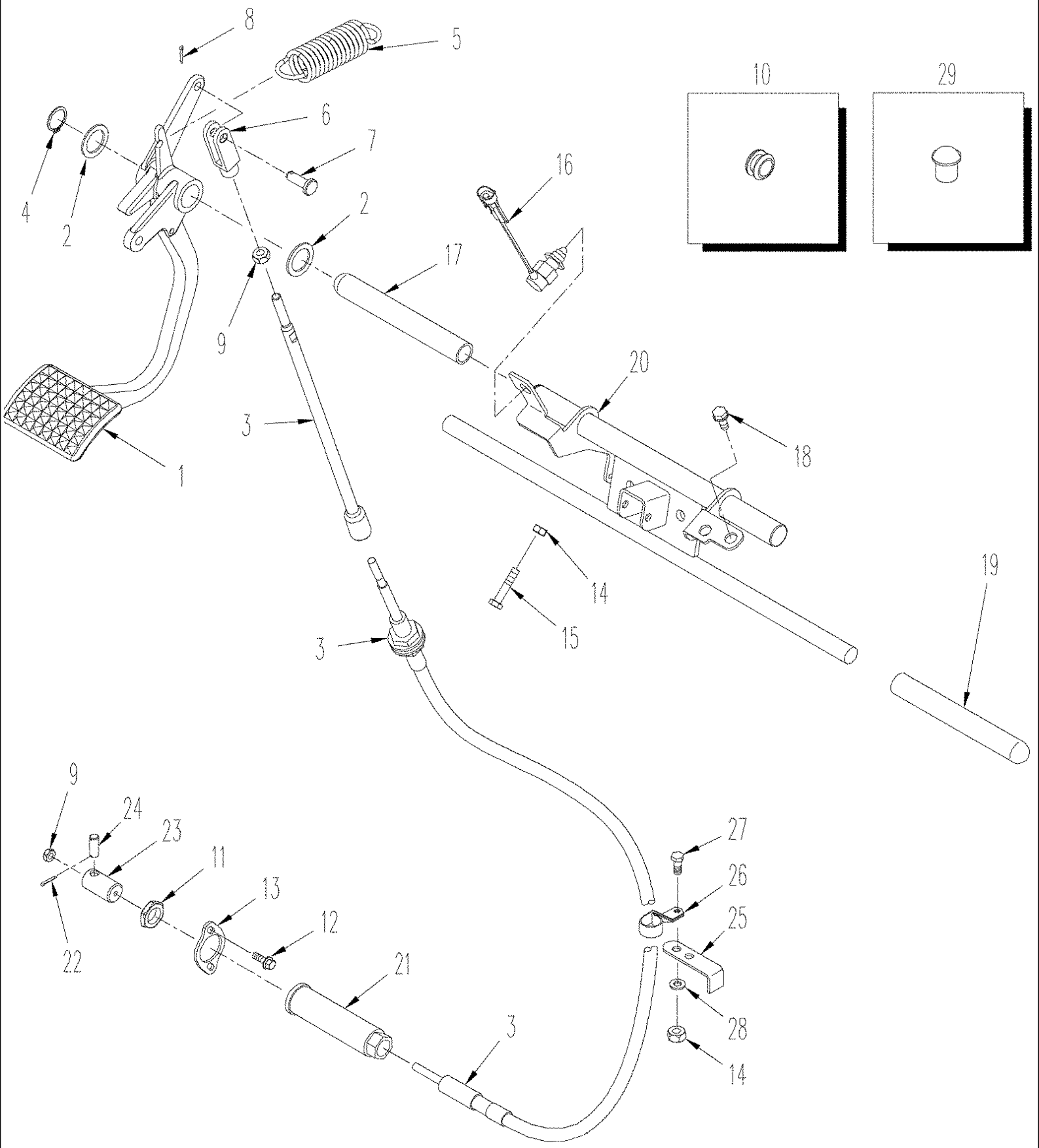

TJ375 TRACTOR - Power Train

06 -00 CLUTCH PEDAL, MANUAL SHIFT TRANSMISSION

ссылка	Номер детали	Кол-во	Описание
1	222462A2	1	PEDAL,
2	281093A1	2	WASHER,
3	435476A1	1	CABLE,
4	370002	1	RING, SNAP, M25, Ext,
5	278210A1	1	SPRING,
6	397144A1	1	CLEVIS,
7	86637937	1	PIN, CLEVIS, 3/8" x 11/16",
8	280250	1	PIN, SPLIT (COTTER), 3/32" x 3/4",
9	86637933	3	NUT, Jam, 5/16"-24, G5, Jam, 5/16; 5
10	86637780	1	GROMMET, 5/8" ID x 1 1/4" Groove Dia, Str Cut,
11	435431A1	1	NUT, Jam
12	86521550	2	BOLT, Hex Flg, 1/4"-20 x 3/4", G5, Full Thd, Flange, 1/4 x 5/64; 5
13	435547A1	1	FLANGE, Flange
14	43362	1	NUT, M8, Cl 10,
15	86639039	1	BOLT, M8 x 35; 10.9
16	417927A1	1	SWITCH, Plunger
17	281893A1	1	BEARING, Pivot
18	43139	2	SCREW, Cap, HH, CL 8.8, M10 x 1.5 x 25
19	321961A1	2	MOLDING,
20	370247A3	1	SUPPORT,
21	435546A1	1	SLEEVE,
22	86643106	2	PIN, SPLIT (COTTER), 1/32" x 3/4", 1/32" x 3/4"
23	NSS	1	NOT SERVICED SEPARATELY, Clutch Valve
24	435428A1	1	PIN,
25	437369A1	1	BRACKET,
26	413187A1	1	CLAMP,
27	43234	1	BOLT, Hex, M8 x 25, 10.9, Cap, HH, CL 10.9, M8 x 1.25 x 25
28	86624184	1	WASHER, M8 x 16 x 1.6, 9 x 16 x 1,6 mm
29	86625130	1	PLUG, Dome, 1.250" hole, Nylon, Clutch Cable Clearance Hole

06 -01 CLUTCH PEDAL, POWER SHIFT TRANSMISSION

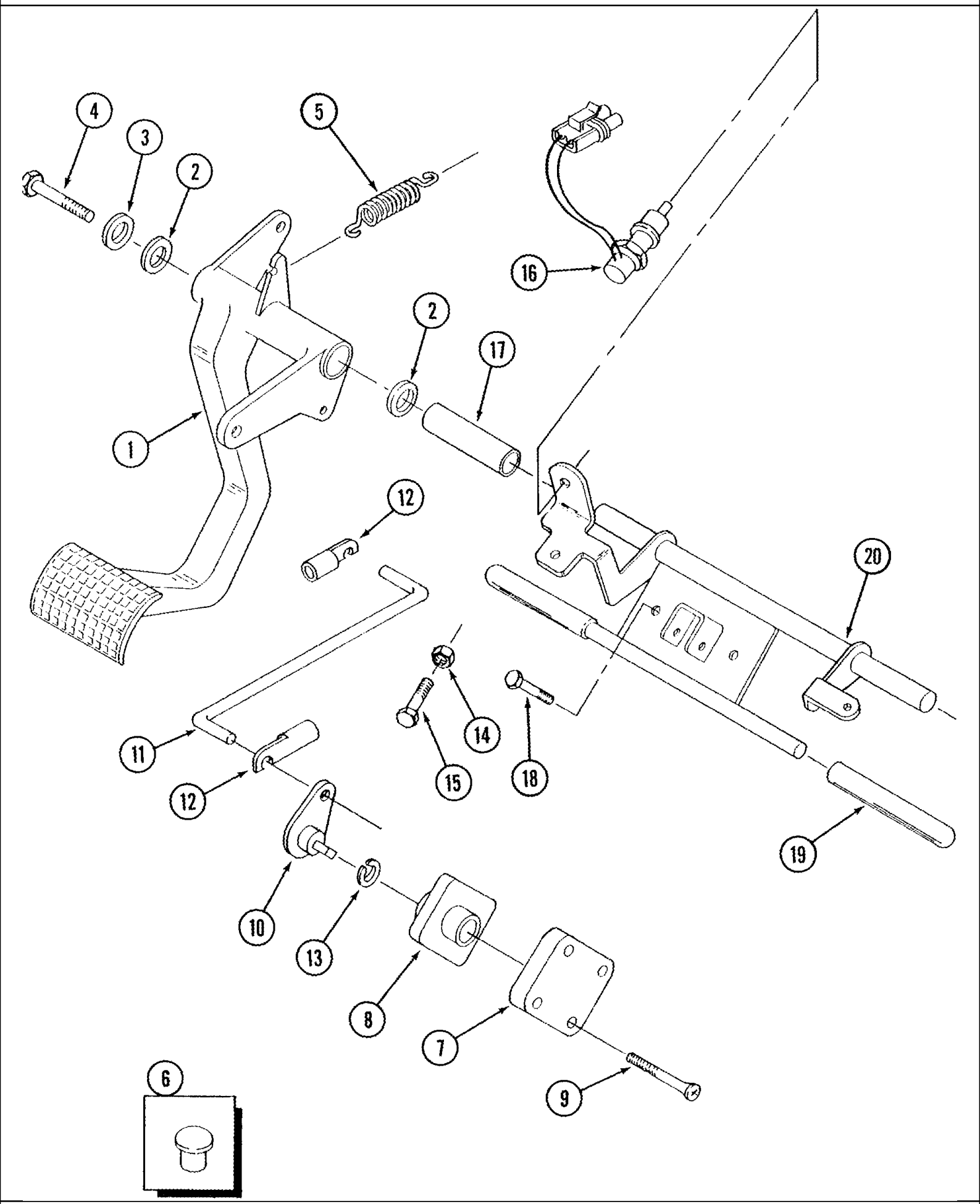

TJ375 TRACTOR - Power Train

06 -01 CLUTCH PEDAL, POWER SHIFT TRANSMISSION

ссылка	Номер детали	Кол-во	Описание
1	222462A2	1	PEDAL,
2	281093A1	2	WASHER,
3	370247A3	1	SUPPORT,
4	370002	1	RING, SNAP, M25, Ext,
5	278210A1	1	SPRING,
6	86625130	1	PLUG, Dome, 1.250" hole, Nylon, Clutch Cable Clearance Hole
7	283659A1	1	SENSOR, Clutch Position
8	305155A2	1	BUSHING,
9	86502967	2	SCREW, Cross Pan Hd, M5 x 30,
10	322409A1	1	PIN,
11	222463A2	1	LINK,
12	435473A1	2	RETAINER,
13	3991509	1	RING, SNAP, M10, Ext, Retaining, M10
14	43362	1	NUT, M8, Cl 10,
15	120106	1	BOLT, Hex, M8 x 40, 8.8, Full Thd,
16	355341A1	1	SWITCH, Plunger
17	281893A1	1	BEARING, Pivot
18	43139	2	SCREW, Cap, HH, CL 8.8, M10 x 1.5 x 25
19	321961A1	2	MOLDING,

06 -02 TRANSMISSION AND THROTTLE CONTROL

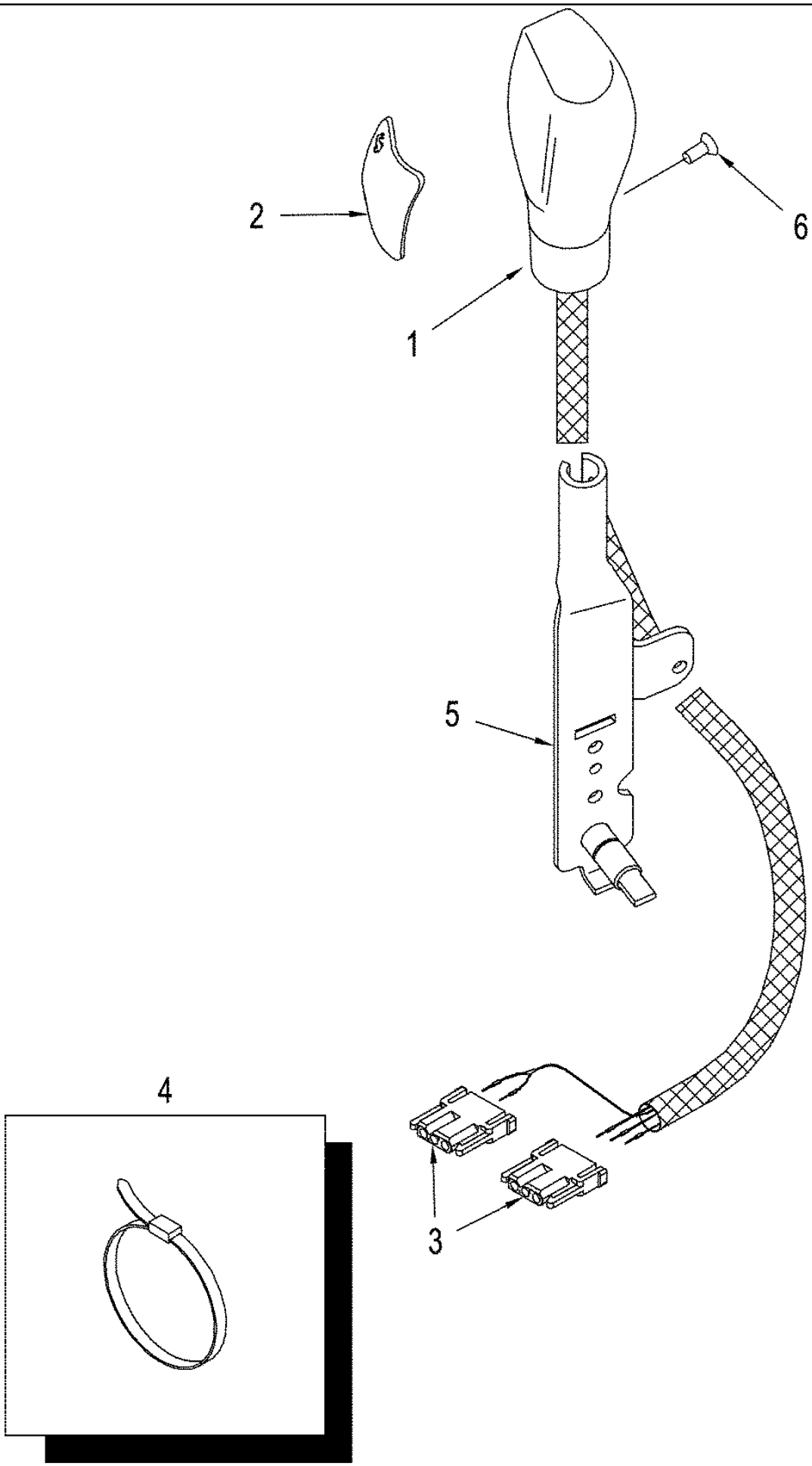

ссылка	Номер детали	Кол-во	Описание
	413804A2	1	HANDLE, Throttle, with skip-shift button, Inc. 1 - 3, With Power Shift Transmission
	431530A1	1	HANDLE, Throttle, Inc. 1 - 3, With Manual Shift Transmission without ARU
	413805A1	1	HANDLE, Throttle, Inc. 1 - 3, With Manual Shift Transmission with ARU
1	NSS	1	NOT SERVICED SEPARATELY, Handle
2	414628A1	1	DECAL,
3	235676A1	2	CONNECTOR, , With Manual Shift Transmission with ARU, With Power Shift Transmission
3	276424A1	1	CONNECTOR, WIRE, , With Manual Shift Transmission without ARU
4	435437A1	2	STRAP, CABLE, 7 in
5	414193A2	1	BRACKET, , With Power Shift Transmission, With Manual Shift Transmission with ARU
5	410029A2	1	BRACKET, , With Manual Shift Transmission without ARU
6	86642447	1	SCREW, Socket, M5 x 12

06 -02(1) TRANSMISSION SHIFT CONTROLS, MANUAL SHIFT TRANSMISSION

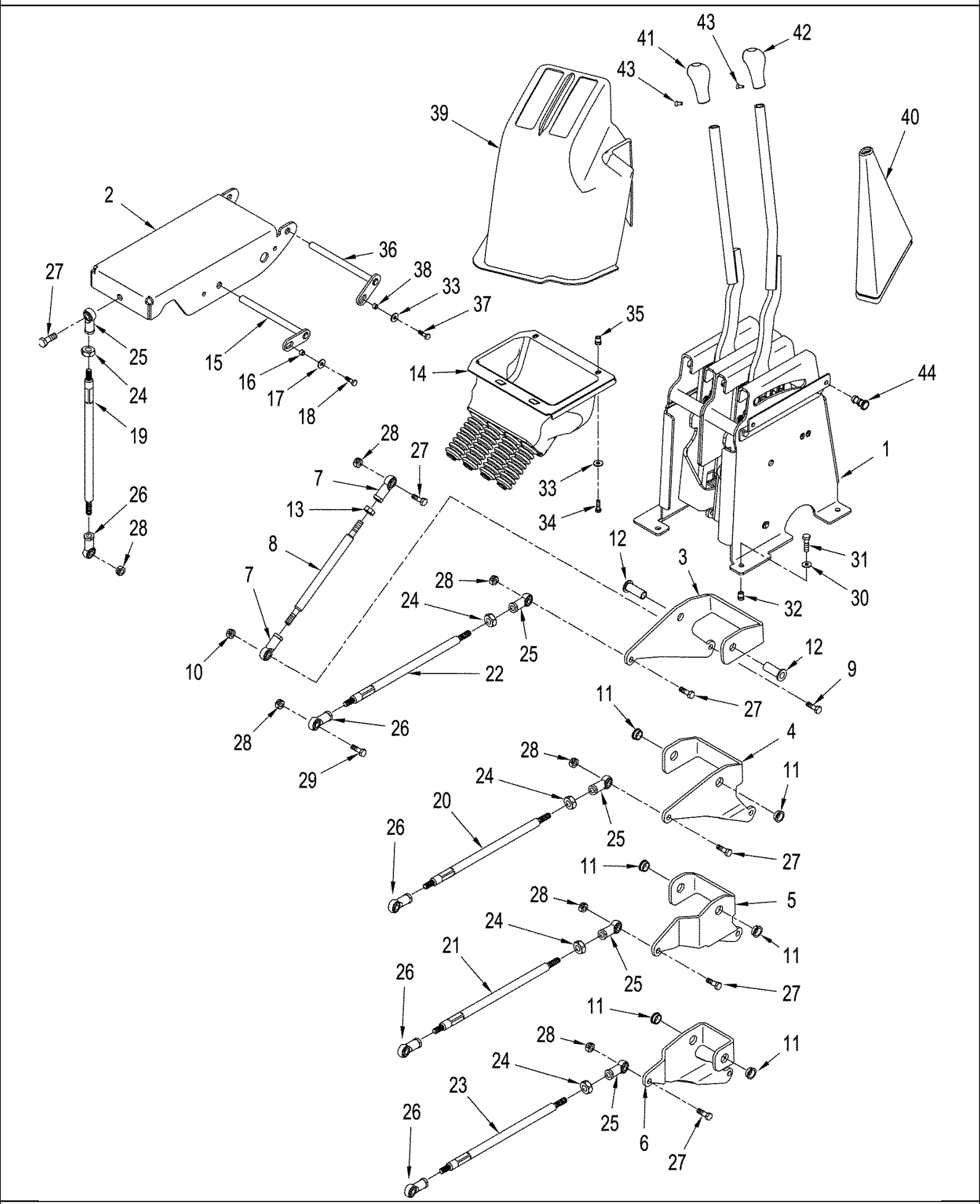

06 -02(1) TRANSMISSION SHIFT CONTROLS, MANUAL SHIFT TRANSMISSION

ссылка	Номер детали	Кол-во	Описание
1	REF	1	INSTRUCTION, Box, See Figure: 06-02 (2)
	387647A1	1	BELLCRANK, Bell, Inc. 2 - 18
2	396435A2	1	SUPPORT,
3	396444A1	1	CRANK, Linkage Pivot
4	396445A1	1	CRANK, Linkage Pivot
5	396446A1	1	CRANK, Linkage Pivot
6	396447A1	1	CRANK, Linkage Pivot
7	402749A1	8	BALL JOINT,
8	431198A1	4	ROD,
9	9515003	4	BOLT, Hex, M10 x 30, 10.9, Full Thd,
10	403749A1	4	NUT, Lock, M10; 8
11	431052A1	6	BUSHING,
12	398870A1	2	BUSHING,
13	86500689	4	NUT, M10, Cl 10, M10; 10
14	412355A1	1	BELLOWS,
15	430415A1	1	PIN ASSY.,
16	430546A1	1	SPACER,
17	86624182	1	WASHER, M6 x 18 x 1.6,
18	86505530	1	BOLT, Hex, M6 x 20, 10.9, M6 x 20; 10.9
	431209A1	1	ROD, Inc. 19, 24-26
	431210A1	1	ROD, Inc. 20, 24-26
	431211A1	1	ROD, Inc. 21, 24-26
	431213A1	1	ROD, Inc. 22, 24-26
	431212A1	1	ROD, Inc. 23, 24-26
19	NSS	1	NOT SERVICED SEPARATELY, Rod, 487 mm (19 in)
20	NSS	1	NOT SERVICED SEPARATELY, Rod, 806 mm (32 in)
21	NSS	1	NOT SERVICED SEPARATELY, Rod, 789 mm (31 in)
22	NSS	1	NOT SERVICED SEPARATELY, Rod, 638 mm (25 in)
23	NSS	1	NOT SERVICED SEPARATELY, Rod, 594 mm (23 in)
24	NSS	1	NOT SERVICED SEPARATELY, Nut, M10; 10
25	402749A1	1	BALL JOINT, Right Hand
26	404639A1	1	BALL JOINT, Left Hand
27	86624978	9	BOLT, Hex, M10 x 35, 10.9, Full Thd,
28	403749A1	13	NUT, Lock, M10; 8
29	86624978	4	BOLT, Hex, M10 x 35, 10.9, Full Thd,
30	86625263	5	WASHER, M8 x 20 x 1.6,
31	43235	5	BOLT, Hex, M8 x 30, 10.9, Cap, HH, CL 10.9, M8 x 1.25 x 30
32	408566A1	3	INSERT, Threaded
33	86624182	2	WASHER, M6 x 18 x 1.6,
34	120100	2	BOLT, Hex, M6 x 20, 8.8,
35	404287A1	1	INSERT,
36	430415A1	1	PIN ASSY.,
37	86505530	1	BOLT, Hex, M6 x 20, 10.9, M6 x 20; 10.9
38	430546A1	1	SPACER,
39	410845A4	1	SHROUD,

ссылка	Номер детали	Кол-во	Описание
40	412354A2	2	BELLOWS,
41	418038A1	1	GRIP, Gear Shifter
42	418039A1	1	GRIP, Range Shifter
43	86639303	2	SCREW, Hex Soc Flat Hd, M5 x 12, 10.9, Set, M5 x 12
44	369929A1	2	FASTENER, Christmas Tree

06 -02(2) SHIFTING UNIT ASSEMBLY, WITH MANUAL SHIFT TRANSMISSION

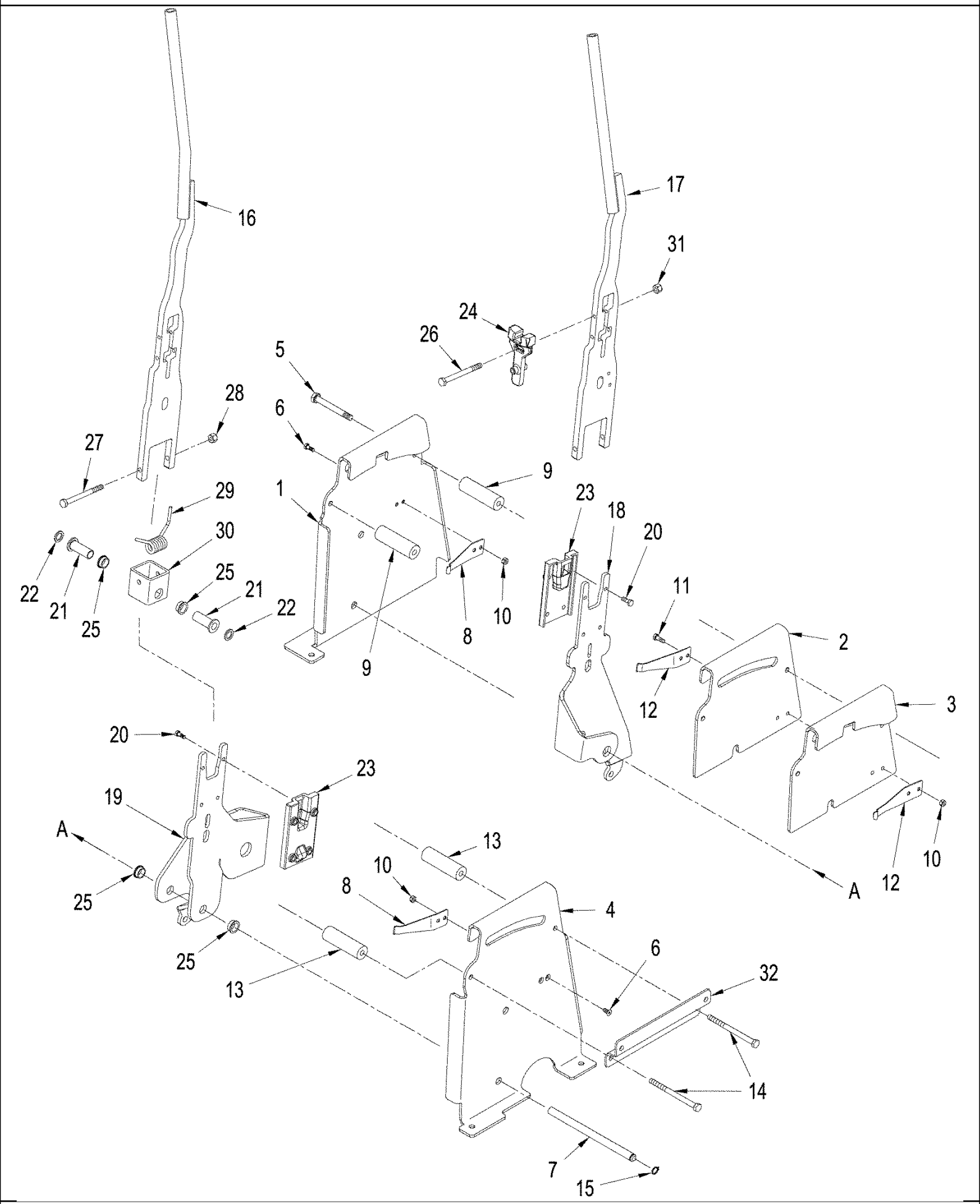

06 -02(2) SHIFTING UNIT ASSEMBLY, WITH MANUAL SHIFT TRANSMISSION

ссылка	Номер детали	Кол-во	Описание
1	404630A3	1	PANEL, SIDE, Mounting, Left-Hand
2	404632A3	1	PANEL, SIDE, Mounting, Center, Left-Hand
3	404633A3	1	PANEL, SIDE, Mounting, Center, Right-Hand
4	404631A3	1	PANEL, SIDE, Mounting, Right-Hand
5	43235	2	BOLT, Hex, M8 x 30, 10.9, Cap, HH, CL 10.9, M8 x 1.25 x 30
6	86511855	4	SCREW, Hex Flat Hd, M6 x 12, 4.8,
7	430841A1	1	PIN ASSY.,
8	409795A2	2	CLIP, SPRING, Spring
9	404635A1	2	SPACER,
10	86500688	6	NUT, M6, Cl 10,
11	120100	2	BOLT, Hex, M6 x 20, 8.8,
12	409796A2	2	CLIP, SPRING, Spring
13	404634A1	2	SPACER,
14	86516527	2	BOLT, Hex, M8 x 110, 10.9, M8 x 40; 10.9
15	300624	1	RING, SNAP, M12, Ext, Ext, M12
16	409790A5	1	LEVER, ASSY & KNOB, Gear Shifter
17	409793A3	1	LEVER ASSY., Range Shifter
18	404644A2	2	LEVER ASSY., Shift, Left Handed
19	419660A2	2	LEVER, Shift, Right Hand
20	86508568	16	BOLT, Hex, M6 x 16, 8.8,
21	398870A1	4	BUSHING,
22	86639312	2	WASHER, M12 x 20 x 2, 13,5 x 20 x 2,0 mm
23	419737A1	4	GUIDE,
24	419597A2	2	LINKAGE, Shifter
25	431052A1	8	BUSHING,
26	86639189	4	BOLT, Hex, M6 x 60, 10.9, M6 x 60; 10.9
27	86516395	2	BOLT, Hex, M8 x 90, 10.9, M8 x 90; 10.9
28	86528579	2	NUT, LOCK, M8 x 1.25, Cl 10,
29	409797A1	2	TORSION SPRING,
30	396431A1	2	TUBE, Mounting, Square
31	412250	4	NUT, LOCK, M8 x 1.25, Cl 8, M6; 8
32	87426775	1	BRACKET, Shifter Shroud

06 -10 WHEELS SINGLE AND DUALS WITH SPACERS

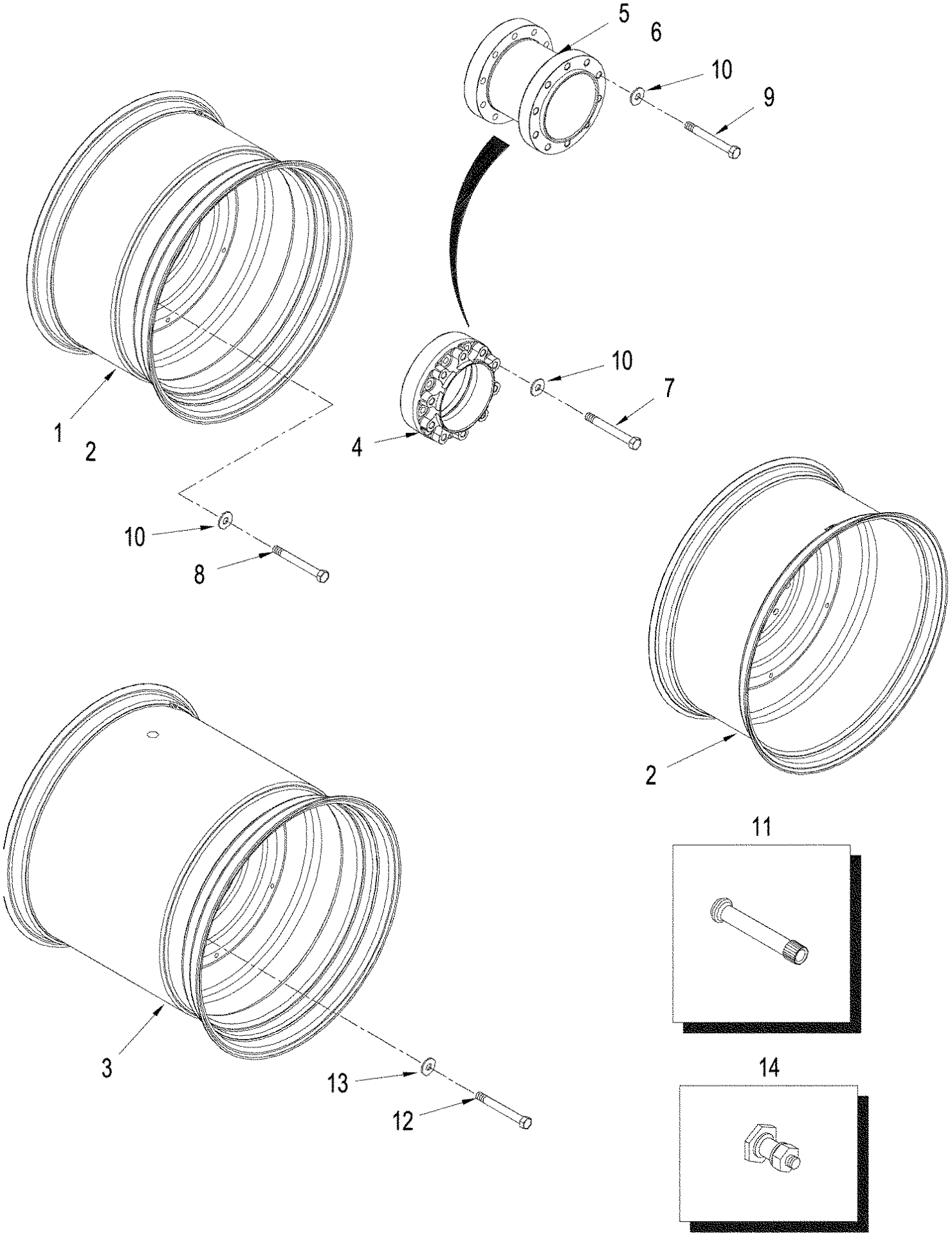

06 -10 WHEELS SINGLE AND DUALS WITH SPACERS

ссылка	Номер детали	Кол-во	Описание
1	402881A1	4	RIM, DW27TB x 32, Single, For Tires: 30.5L-32
2	395702A1	AR	RIM, MW23Ax42, Single or Dual, For Tires: 710/70R42
2	395694A1	AR	RIM, MW23Ax38, Single or Dual, For Tires: 710/70R38, 750/65-38, 710/70R38, 710/65-38
2	395705A1	AR	RIM, W16A x 46, Single or Dual, For Tires: 480/80R46, 520/85R46, 18.4R46
2	395693A1	AR	RIM, WH18A x 38, Single or Dual, For Tires: 520/85R38, 20.8R38
2	395698A1	AR	RIM, WH18A x 42, Single or Dual, For Tires: 520/85R42, 20.8R42
2	395700A1	AR	RIM, MW20A x 42, Single or Dual, For Tires: 620/70R42
2	402882A1	AR	RIM, MW28A x 42, Single or Dual, For Tires: 900/50R42, 850/55-42
2	409213A1	AR	RIM, MW25 x 38, Single or Dual, For Tires: 800/70R38
2	395697A1	AR	RIM, W16A x 42, Single or Dual, For Tires: 480/80R42, 18.4R42
2	402880A1	AR	RIM, W12 x 54, Single or Dual, For Tires: 380/90R54
2	395704A1	AR	RIM, W13 x 46, Single or Dual, For Tires: 420/80R46, 14.9R46
2	87451221	AR	WHEEL, 46 x FDW20A, Single or Dual, For Tires: 620/70R46
3	87312788	4	WHEEL, 32 x DWM44, For Tires: 76 x 50-32, Scraper Model, Used with Single Wheel Dual Hub Application
4	405822A1	1	SPACER, 127 mm (5 in)
5	405823A1	1	SPACER, 254 mm (10 in)
6	405824A1	1	SPACER, 330 mm (13 in)
7	86639173	10	BOLT, Hex, M22 x 150, 10.9, M22 x 160; 10.9
8	827-22080	10	BOLT, Hex, M22 x 80, 10.9, Full Thd, CL 10.9, M22 x 80
9	86639171	10	BOLT, Hex, M22 x 130, 10.9, CL 10.9, M22 x 130
10	86639318	10	WASHER, 24 x 44 x 4 mm
11	A20058	AR	VALVE STEM,
12	412398	64	BOLT, Hex, M16 x 50, 10.9, , Used with Single Wheel Dual Hub Application, Scraper Model
13	86625266	64	WASHER, M17.5 x 30 x 4, HT, , Scraper Model, Used with Single Wheel Dual Hub Application
14	87352762	AR	PLUG, Rim Hole, 5/8"

TJ375 TRACTOR - Power Train

06 -11 WHEELS TRIPLES WITH SPACERS

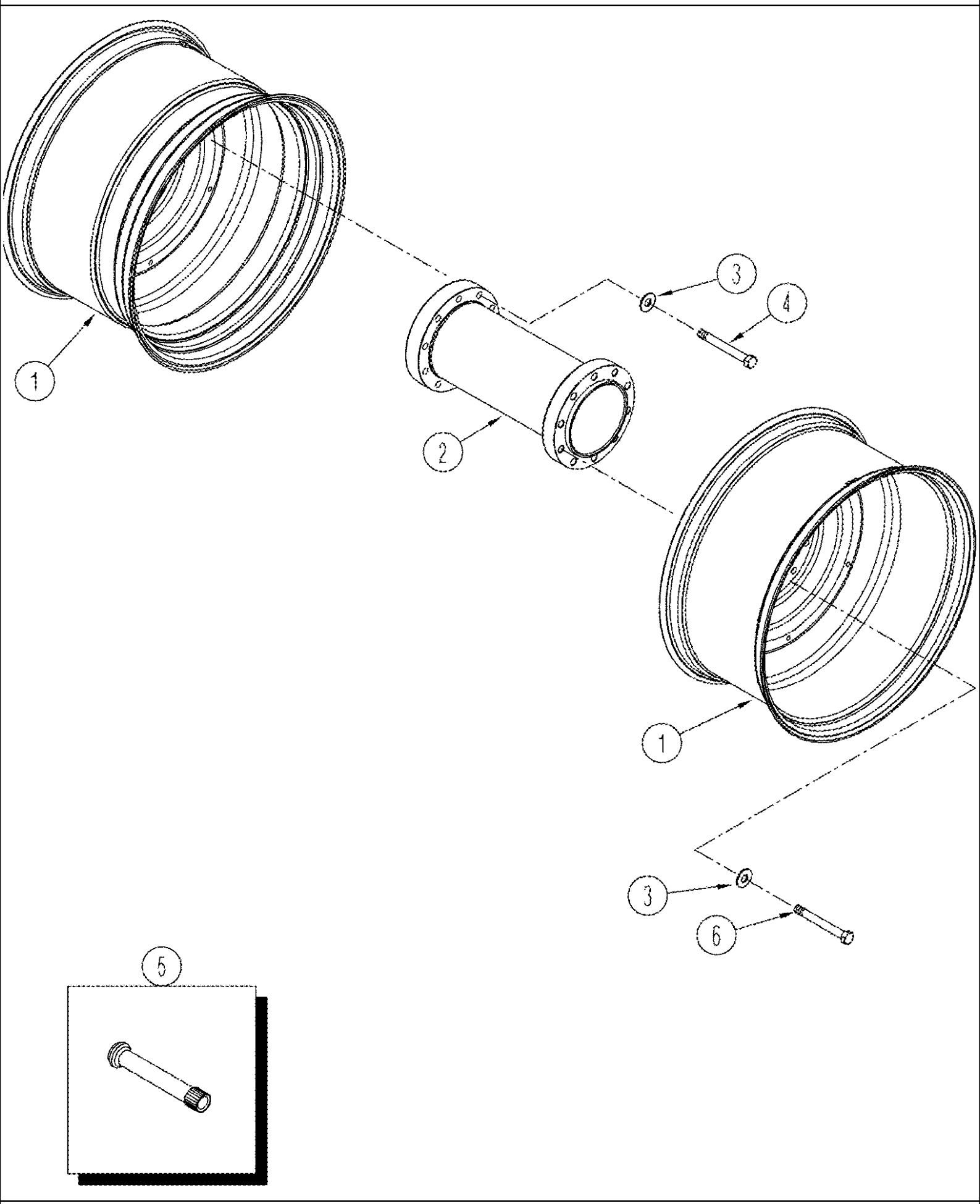

TJ375 TRACTOR - Power Train

06 -11 WHEELS TRIPLES WITH SPACERS

ссылка	Номер детали	Кол-во	Описание
1	395705A1	12	RIM, W16Ax46, For Tires: 480/80R46, 520/85R46, 18.4R46
1	395698A1	12	RIM, WH18Ax42, For Tires: 520/85R42, 20.8R42
2	409987A1	1	SPACER, 711 mm (28 in)
3	86639318	10	WASHER, 24 x 44 x 4 mm
4	86639172	10	BOLT, Hex, M22 x 140, 10.9, M22 x 140; 10.9
5	A20058	AR	VALVE STEM,
6	827-22080	10	BOLT, Hex, M22 x 80, 10.9, Full Thd, CL 10.9, M22 x 80

06 -12 HUB ASSEMBLY MOUNTING

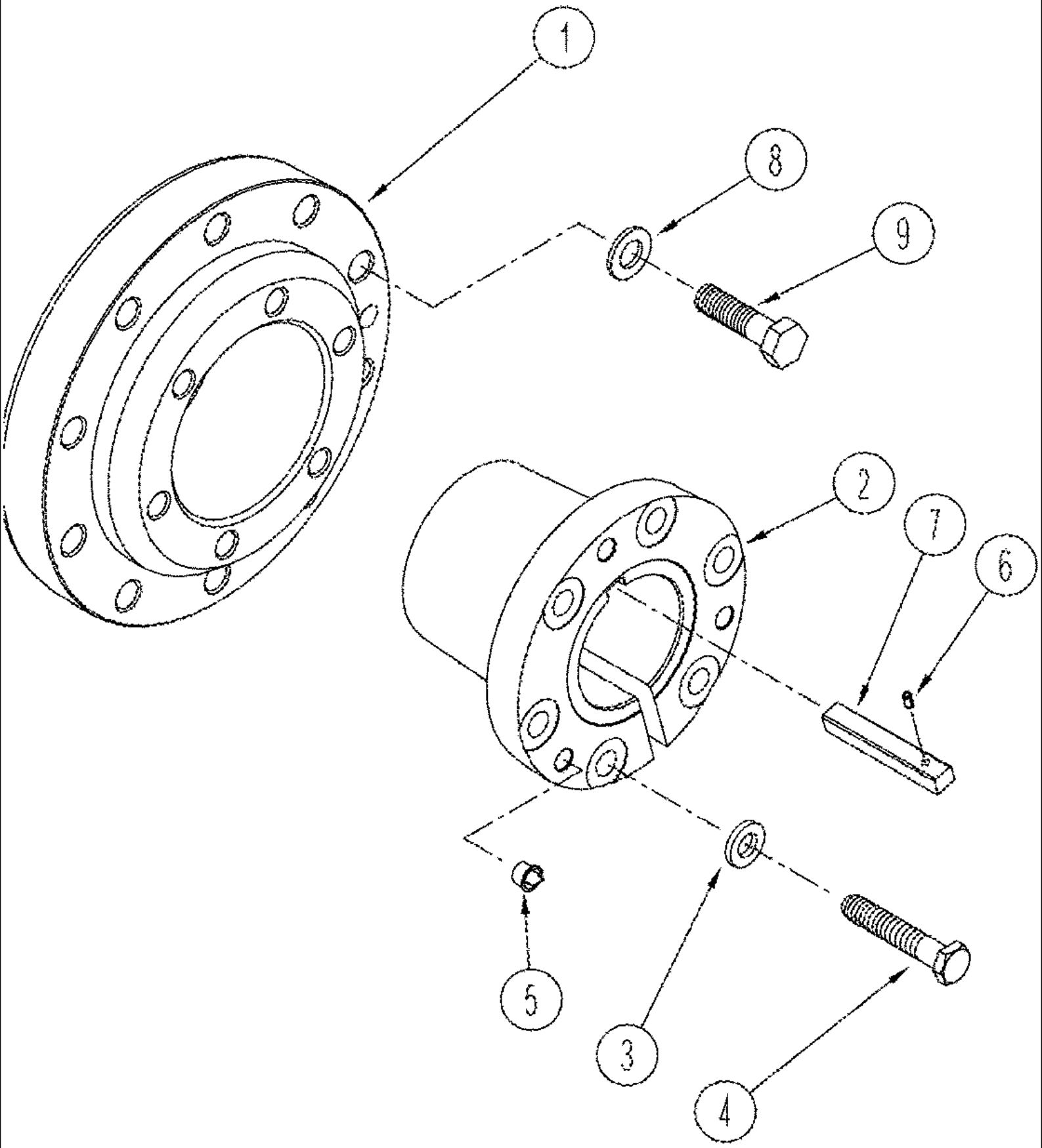

TJ375 TRACTOR - Power Train

06 -12 HUB ASSEMBLY MOUNTING

ссылка	Номер детали	Кол-во	Описание
	405821A1	1	HUB, Inc. 1-5
1	405812A1	1	HUB,
2	405816A1	1	BUSHING, 115 mm (4-1/2 in)
3	396-31081	6	WASHER, 13/16" x 1 1/2" x .219", HDN,
4	228273A1	6	BOLT, CL 10.9, M20 x 110
5	303401A1	3	PLUG, Plastic
6	86977782	4	PIN, LOCK, 1/4" x 1/2", Slotted,
7	A63219	4	KEY, 3/4 x 6
8	86639318	40	WASHER, 24 x 44 x 4 mm
9	827-22080	40	BOLT, Hex, M22 x 80, 10.9, Full Thd, CL 10.9, M22 x 80

06 -13(1) TRANSMISSION MOUNTING - MANUAL SHIFT

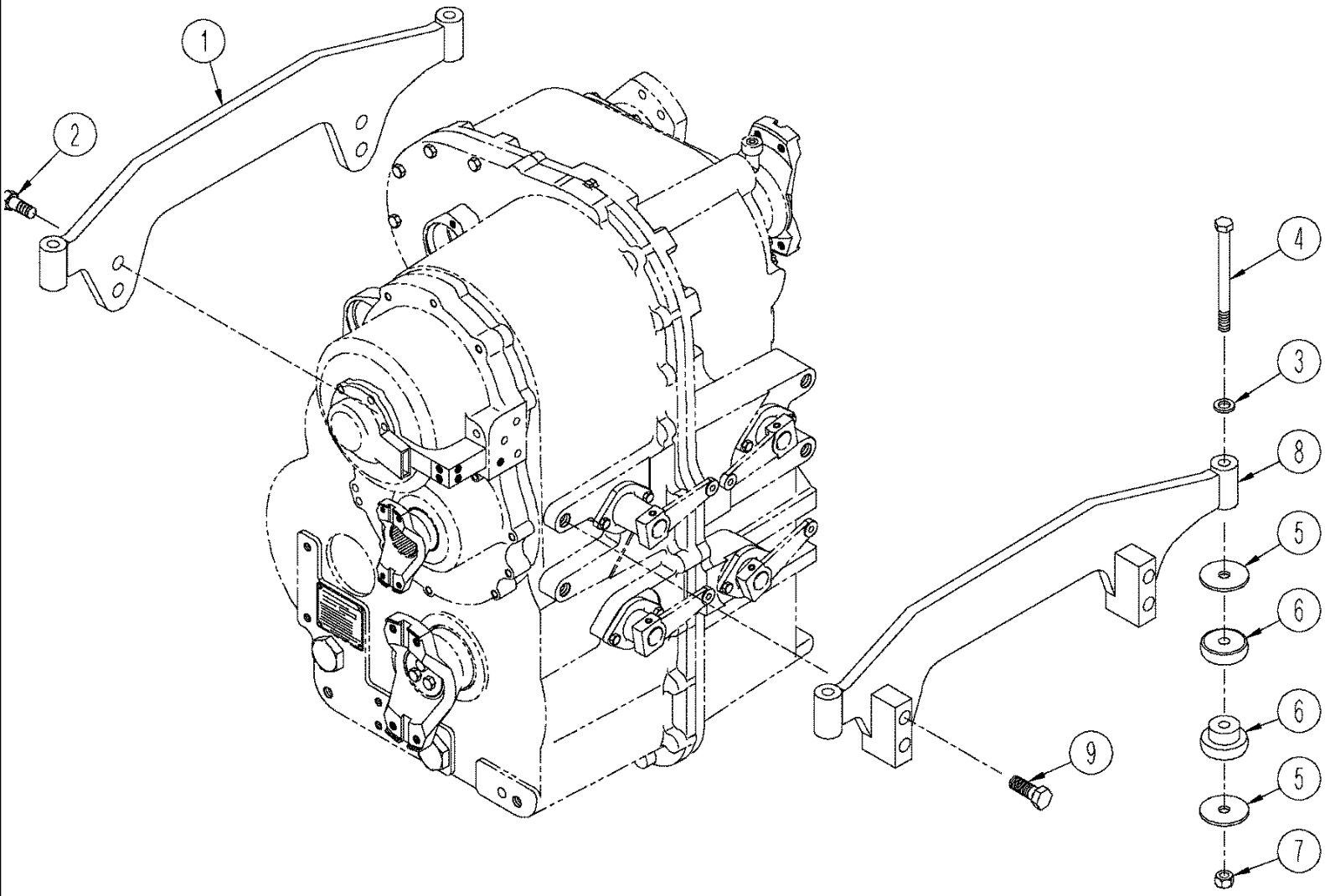

06 -13(1) TRANSMISSION MOUNTING - MANUAL SHIFT

ссылка	Номер детали	Кол-во	Описание
1	388851A1	2	PLATE,
2	9843495	8	BOLT, Hex, M20 x 60, 10.9,
3	86639318	4	WASHER, 24 x 44 x 4 mm
4	86642453	4	BOLT, M22 x 190; 10.9
5	76088717	8	WASHER,
6	340967A1	4	MOUNT, RUBBER, Rubber
7	86642454	4	NUT, Lock, M22; 8
8	397581A1	1	PLATE, Mounting
9	86511674	4	BOLT, Hex, M20 x 120, 10.9, M20 x 120; 10.9

06 -13(2) TRANSMISSION MOUNTING - POWER SHIFT

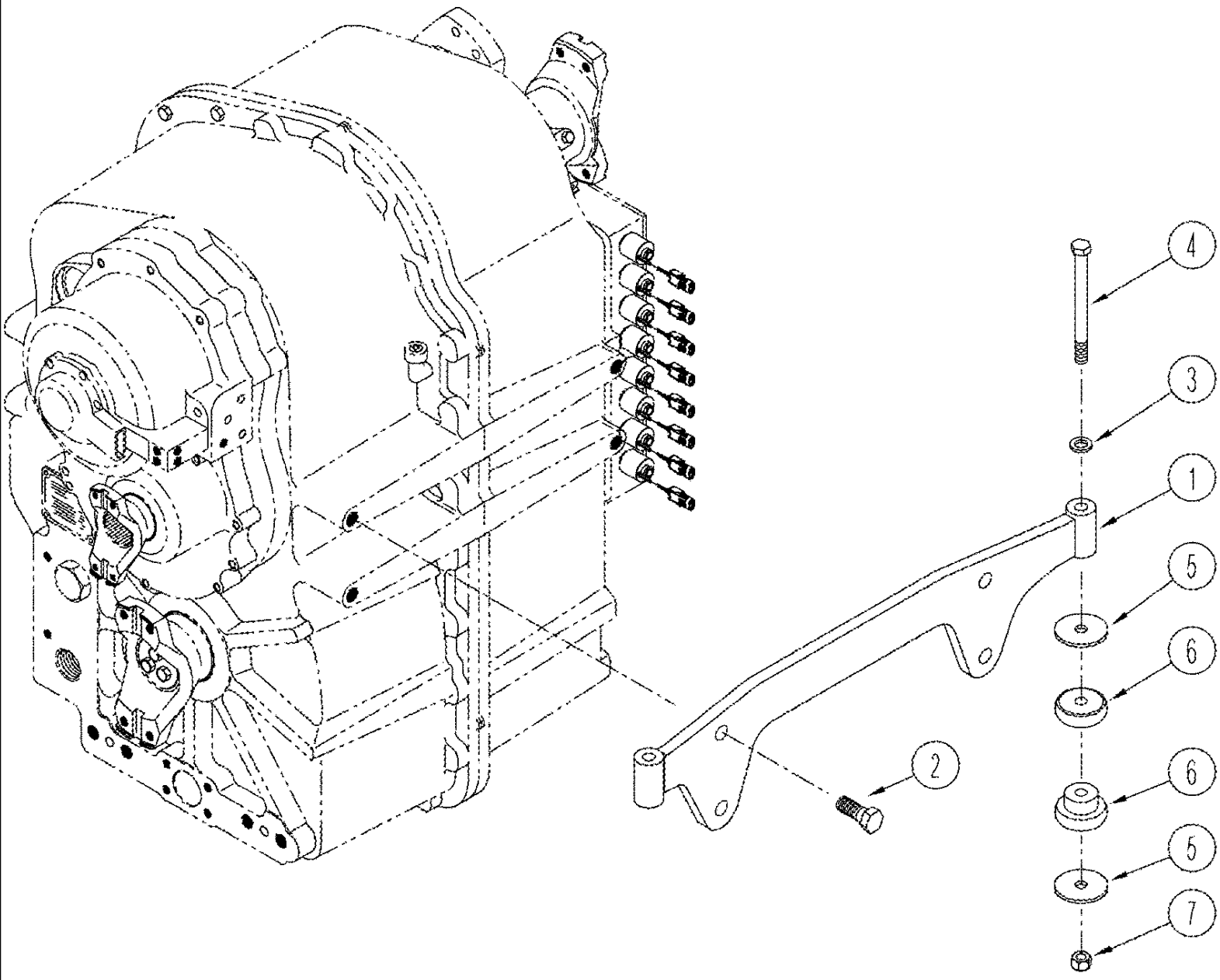

06 -13(2) TRANSMISSION MOUNTING - POWER SHIFT

ссылка	Номер детали	Кол-во	Описание
1	408706A1	2	PLATE, Mounting
2	9843495	8	BOLT, Hex, M20 x 60, 10.9,
3	86639318	4	WASHER, 24 x 44 x 4 mm
4	86642453	4	BOLT, M22 x 190; 10.9
5	76088717	8	WASHER,
6	340967A1	4	MOUNT, RUBBER,
7	86642454	4	NUT, M22; 10

06 -14(01) TRANSMISSION LUBRICATION, MANUAL SHIFT

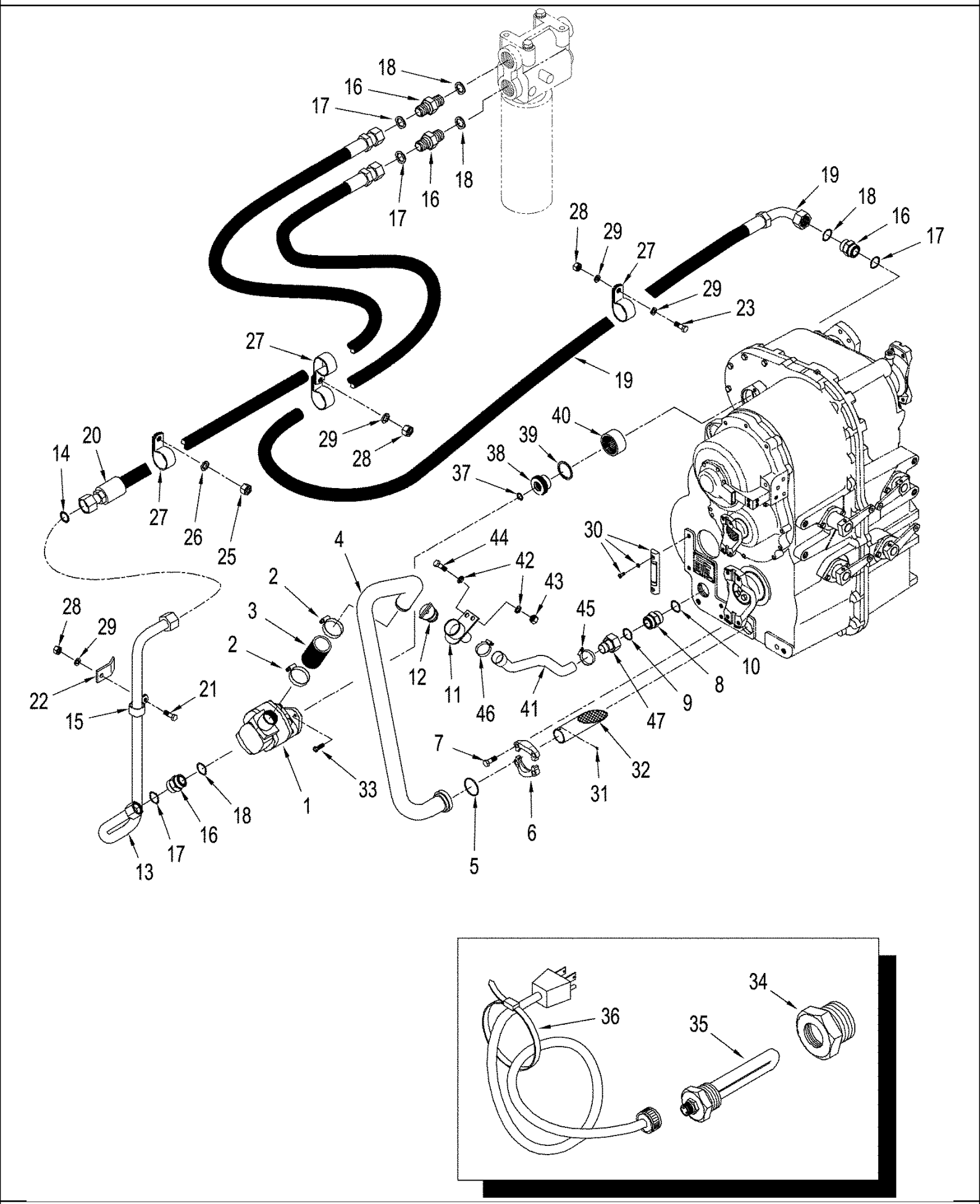

06 -14(01) TRANSMISSION LUBRICATION, MANUAL SHIFT

ссылка	Номер детали	Кол-во	Описание
1	370546A1	1	PUMP,
2	86637709	2	CLAMP, HOSE, 1.25/2.625 HD Worm,
3	435454A1	1	HOSE, 152 mm (6 in), Cut From : 443069A1
4	418735A1	1	TUBE ASSY.,
5	86637769	1	O-RING, -228, 90 Duro, 2.234" ID x .139" Thk,
6	A14141	2	FLANGE,
7	9824642	4	BOLT, Hex, M12 x 35, 10.9,
8	86579685	1	CONNECTOR, HYD., 1 11/16"-12 ORFS x M42 x 2 ORB, Inc. 9, 10
9	9824051	1	O-RING, -025, 90 Duro, 1.176" ID x .070" Thk,
10	86639047	1	O-RING, Cl 6, 38.6MM ID x 2.9 Thk,
11	414480A2	1	TUBE ASSY., Transmission Fill
12	325737A1	1	CAP,
13	438240A1	1	TUBE ASSY.,
14	9824050	1	O-RING, -021, 90 Duro, .926" ID x .070" Thk,
15	86637977	1	CLAMP, 1", Insul, 5/16" Bolt,
16	86580179	1	CONNECTOR, HYD., 1 7/16"-12 ORFS x M22 x 2 ORB, Includes 17, 18
17	86639046	1	O-RING, Cl 6, 29.6MM ID x 2.9 Thk,
18	9824050	1	O-RING, -021, 90 Duro, .926" ID x .070" Thk,
19	402010A1	1	HOSE ASSY., Supply
20	441327A1	1	HOSE ASSY., Outlet
21	43233	1	BOLT, Hex, M8 x 20, 10.9,
22	416102A1	1	SUPPORT,
23	43235	3	BOLT, Hex, M8 x 30, 10.9,
24	324089A1	2	PLATE ASSY.,
25	86500689	2	NUT, M10, Cl 10,
26	86624176	2	WASHER, M10 x 20 x 2,
27	86639002	6	CLAMP, 1 3/8", Insul, 7/16" Bolt,
28	43362	3	NUT, M8, Cl 10,
29	86624184	3	WASHER, M8 x 16 x 1.6,
30	L116247	1	GAUGE, Inc. Hardware
31	S14701960	1	BALL,
32	370551A1	1	TUBE ASSY.,
33	412160	2	BOLT, Hex, M10 x 1.25 x 30, Cl8.8, Full Thd,
	186135A1	1	KIT, Transmission Heater, Inc. 34 - 36
34	367930A1	1	ADAPTER,
35	385486A1	1	HEATER ASSY., 300 W, With Cord Set
36	435437A1	5	STRAP, CABLE, 7 in
37	427516A1	1	SNAP RING,
38	427523A1	1	ADAPTER,
39	86639140	1	RING, SNAP, M50 Int,
40	427521A1	1	COUPLING,
41	419491A3	1	HOSE,
42	86624176	4	WASHER, M10 x 20 x 2,
43	86514720	2	NUT, LOCK, M10 x 1.5
44	627-10035	2	BOLT, Hex, M10 x 35, 10.9, Full Thd,

ссылка	Номер детали	Кол-во	Описание
45	507586	1	CLAMP, HOSE, #20, 0.81/1.75 Type F Worm,
46	84674	1	CLAMP, HOSE, #28, 1.31/2.25 Type F Worm,
47	429193A1	1	TUBE ASSY.,

06 -14(02) TRANSMISSION LUBRICATION, POWER SHIFT, BSN RVS002701

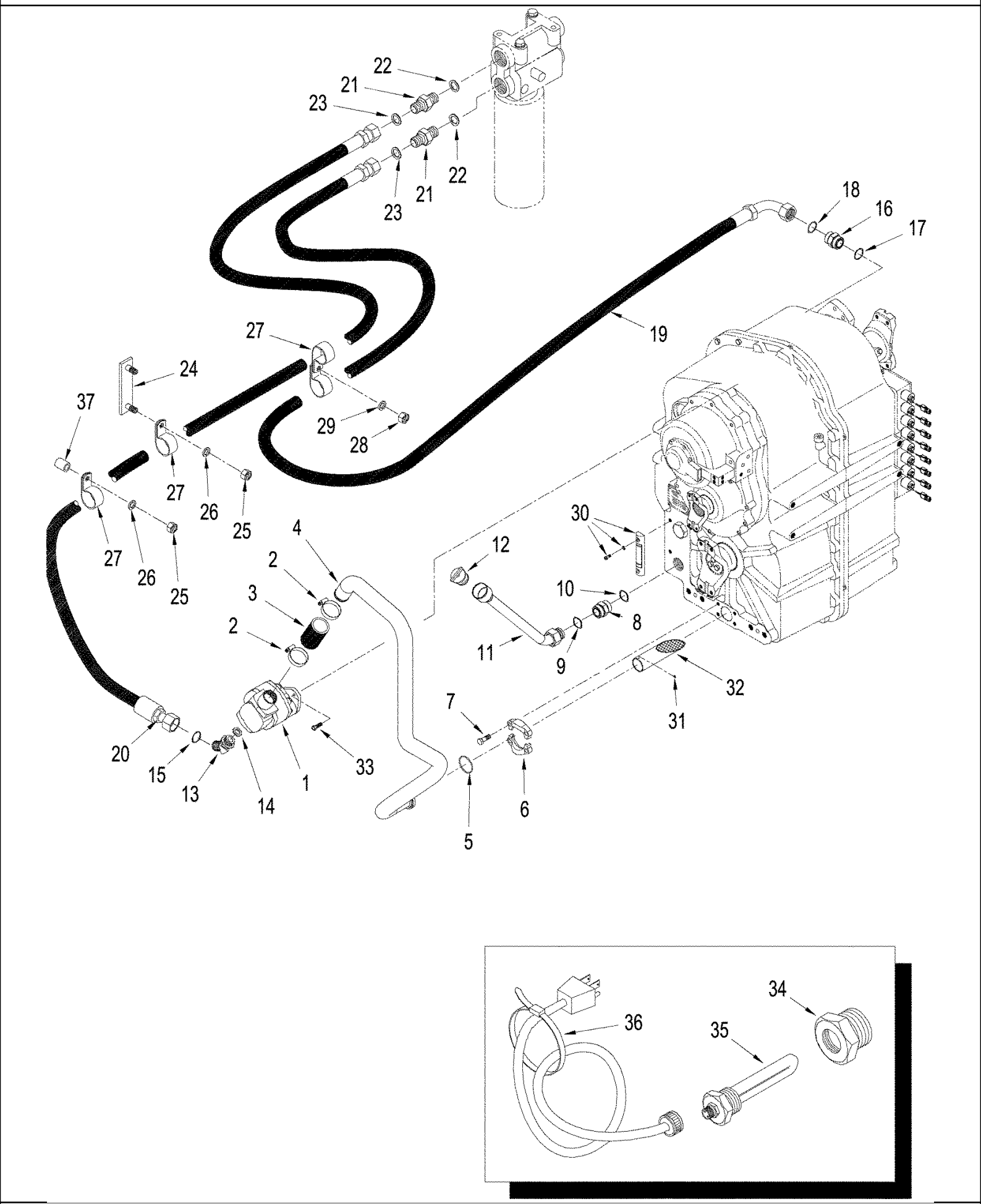

TJ375 TRACTOR - Power Train

06 -14(02) TRANSMISSION LUBRICATION, POWER SHIFT, BSN RVS002701

ссылка	Номер детали	Кол-во	Описание
1	370546A1	1	PUMP,
2	86637709	2	CLAMP, HOSE, 1.25/2.625 HD Worm,
3	435454A1	1	HOSE, 102 mm (4 in)
4	408581A1	1	TUBE,
5	86637769	1	O-RING, -228, 90 Duro, 2.234" ID x .139" Thk,
6	A14141	2	FLANGE,
7	9824642	4	BOLT, Hex, M12 x 35, 10.9,
8	86579685	1	CONNECTOR, HYD., 1 11/16"-12 ORFS x M42 x 2 ORB, Inc. 9, 10
9	9824051	1	O-RING, -025, 90 Duro, 1.176" ID x .070" Thk,
10	86639046	1	O-RING, Cl 6, 29.6MM ID x 2.9 Thk, 29.6 ID x 2.9 W
11	403390A1	1	TUBE, Transmission Fill
12	325737A1	1	CAP,
13	86580180	1	ELBOW, 90є, 1 7/16"-12 ORFS x M33 x 2 ORB, Includes 14, 15
14	86639046	1	O-RING, Cl 6, 29.6MM ID x 2.9 Thk, 29.6 ID x 2.9 W
15	9824050	1	O-RING, -021, 90 Duro, .926" ID x .070" Thk,
16	86580179	1	CONNECTOR, HYD., 1 7/16"-12 ORFS x M22 x 2 ORB, Includes 17, 18
17	86639046	1	O-RING, Cl 6, 29.6MM ID x 2.9 Thk, 29.6 ID x 2.9 W
18	9824050	1	O-RING, -021, 90 Duro, .926" ID x .070" Thk,
19	327444A2	1	HOSE ASSY., Supply
20	307167A1	1	HOSE, 2565 mm (101 in), Outlet
21	86580179	2	CONNECTOR, HYD., 1 7/16"-12 ORFS x M22 x 2 ORB, Includes 22, 23
22	9824050	1	O-RING, -021, 90 Duro, .926" ID x .070" Thk,
23	86639046	1	O-RING, Cl 6, 29.6MM ID x 2.9 Thk, 29.6 ID x 2.9 W
24	324089A1	2	PLATE ASSY.,
25	86500689	2	NUT, M10, Cl 10, M10; 10.9
26	86624184	2	WASHER, M8 x 16 x 1.6, 11 x 20 x 2 mm
27	86639002	6	CLAMP, 1 3/8", Insul, 7/16" Bolt, 1-3/8 ID, BSN RVS001801
27	515-24317	8	CLAMP, 1 1/4", Insul, 7/16" Bolt, , ASN RVS001801
28	43362	3	NUT, M8, Cl 10,
29	86624184	3	WASHER, M8 x 16 x 1.6, 9 x 16 x 1.6 mm
30	L116247	1	GAUGE, Inc. Hardware
31	S14701960	1	BALL,
32	370551A1	1	TUBE ASSY.,
33	412160	2	BOLT, Hex, M10 x 1.25 x 30, Cl8.8, Full Thd, M10 x 30
	186135A1	1	KIT, Transmission Heater, Inc. 34 - 36
34	367930A1	1	ADAPTER,
35	385486A1	1	HEATER ASSY., 300 W, With Cord Set
36	435437A1	5	STRAP, CABLE, 7 in
37	432444A1	1	SPACER,

06 -14(03) TRANSMISSION LUBRICATION, POWER SHIFT, ASN RVS002701

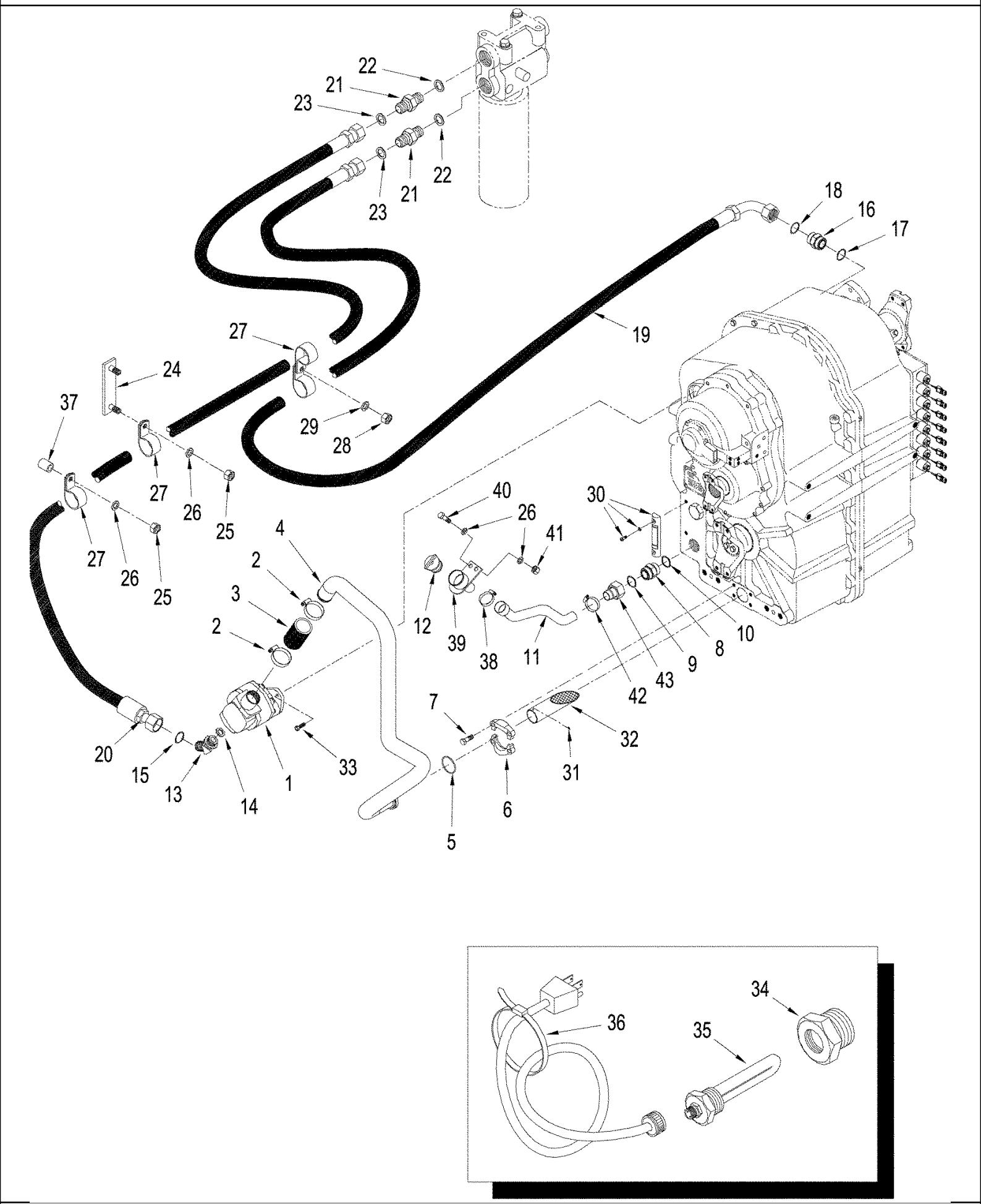

TJ375 TRACTOR - Power Train

06 -14(03) TRANSMISSION LUBRICATION, POWER SHIFT, ASN RVS002701

ссылка	Номер детали	Кол-во	Описание
1	370546A1	1	PUMP,
2	86637709	2	CLAMP, HOSE, 1.25/2.625 HD Worm,
3	435454A1	1	HOSE, 102 mm (4 in)
4	408581A1	1	TUBE,
5	86637769	1	O-RING, -228, 90 Duro, 2.234" ID x .139" Thk,
6	A14141	2	FLANGE,
7	9824642	4	BOLT, Hex, M12 x 35, 10.9,
8	86579685	1	CONNECTOR, HYD., 1 11/16"-12 ORFS x M42 x 2 ORB, Inc. 9, 10
9	9824051	1	O-RING, -025, 90 Duro, 1.176" ID x .070" Thk,
10	86639046	1	O-RING, Cl 6, 29.6MM ID x 2.9 Thk, 29.6 ID x 2.9 W
11	419491A3	1	HOSE, Transmission Fill
12	325737A1	1	CAP,
13	86580180	1	ELBOW, 90є, 1 7/16"-12 ORFS x M33 x 2 ORB, Includes 14, 15
14	86639046	1	O-RING, Cl 6, 29.6MM ID x 2.9 Thk,
15	9824050	1	O-RING, -021, 90 Duro, .926" ID x .070" Thk,
16	86580179	1	CONNECTOR, HYD., 1 7/16"-12 ORFS x M22 x 2 ORB, Includes 17, 18
17	86639046	1	O-RING, Cl 6, 29.6MM ID x 2.9 Thk,
18	9824050	1	O-RING, -021, 90 Duro, .926" ID x .070" Thk,
19	327444A2	1	HOSE ASSY., Supply
20	307167A1	1	HOSE, 2565 mm (101 in), Outlet
21	86580179	2	CONNECTOR, HYD., 1 7/16"-12 ORFS x M22 x 2 ORB, Includes 22, 23
22	9824050	1	O-RING, -021, 90 Duro, .926" ID x .070" Thk,
23	86639046	1	O-RING, Cl 6, 29.6MM ID x 2.9 Thk,
24	324089A1	2	PLATE ASSY.,
25	86500689	2	NUT, M10, Cl 10,
26	86624184	4	WASHER, M8 x 16 x 1.6,
27	515-24317	8	CLAMP, 1 1/4", Insul, 7/16" Bolt,
28	43362	3	NUT, M8, Cl 10,
29	86624184	3	WASHER, M8 x 16 x 1.6,
30	L116247	1	GAUGE, Inc. Hardware
31	S14701960	1	BALL,
32	370551A1	1	TUBE ASSY.,
33	412160	2	BOLT, Hex, M10 x 1.25 x 30, Cl8.8, Full Thd,
	186135A1	1	KIT, Transmission Heater, Inc. 34 - 36
34	367930A1	1	ADAPTER,
35	385486A1	1	HEATER ASSY., 300 W, With Cord Set
36	435437A1	5	STRAP, CABLE, 7 in
37	432444A1	1	SPACER,
38	84674	1	CLAMP, HOSE, #28, 1.31/2.25 Type F Worm,
39	414480A2	1	TUBE ASSY., Fill
40	627-10035	2	BOLT, Hex, M10 x 35, 10.9, Full Thd,
41	412141	2	NUT, LOCK, M10 x 1.5, Cl 8,
42	214-1420	1	CLAMP, HOSE, #20, 0.81/1.75 Type F Worm,
43	429193A1	1	TUBE ASSY., Fitting, 1-1/4" barb x 1-11/16" fc sl

06 -15(01) MANUAL SHIFT TRANSMISSION - VALVE ASSEMBLY MOUNTING

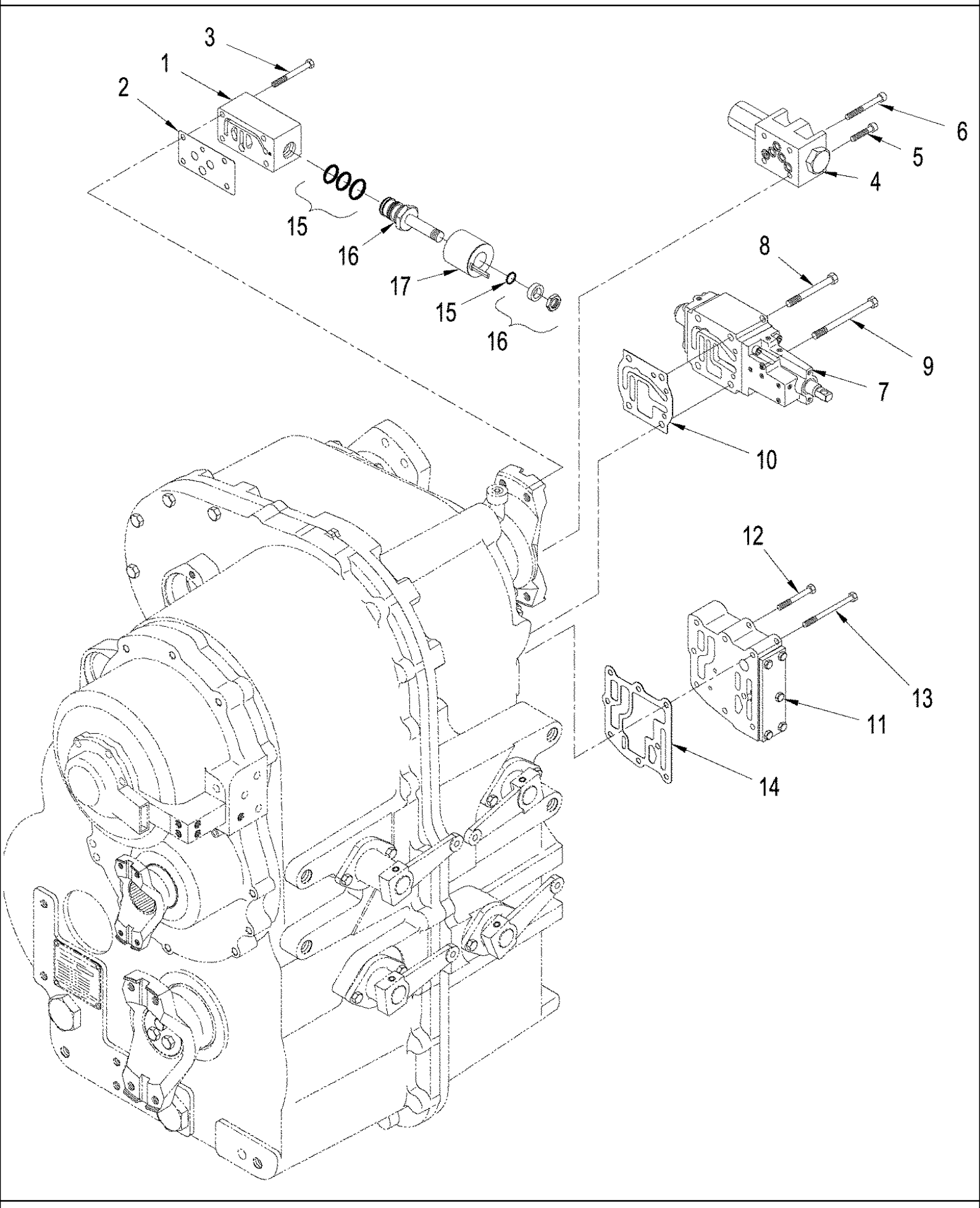

06 -15(01) MANUAL SHIFT TRANSMISSION - VALVE ASSEMBLY MOUNTING

ссылка	Номер детали	Кол-во	Описание
1	428114A1	1	VALVE, High / Low
2	428123A1	1	GASKET, Mounting
3	331175	4	BOLT, Hex, M8 x 75, 8.8,
4	428091A1	1	VALVE, Control, Lockout, See Figure : 06-15 (13)
5	427594A1	2	SCREW, Socket
6	427593A1	2	SCREW, Socket
7	428083A1	1	VALVE, See Figure : 06-15 (12)
8	86637965	2	BOLT, Hex, M10 x 90, 8.8,
9	86637968	2	BOLT, Hex, M10 x 1.25 x 120, 8.8,
10	427581A1	1	GASKET, Mounting
11	428096A1	1	VALVE, Regulator, See Figure : 06-15 (14)
12	86639028	5	BOLT, Hex, M8 x 65, 8.8, Full Thd,
13	86639029	3	BOLT, Hex, M8 x 75, 8.8, Full Thd,
14	S1150S02F	1	GASKET, Mounting
	371737A1	1	VALVE, SOLENOID, Three-way, Inc. 15 - 17
15	NSS	4	NOT SERVICED SEPARATELY, O-Ring
16	370600A1	1	VALVE, SOLENOID, Pilot Assy.
17	371739A1	1	COIL,

06 -15(02) MANUAL SHIFT TRANSMISSION - COVERS AND YOKES

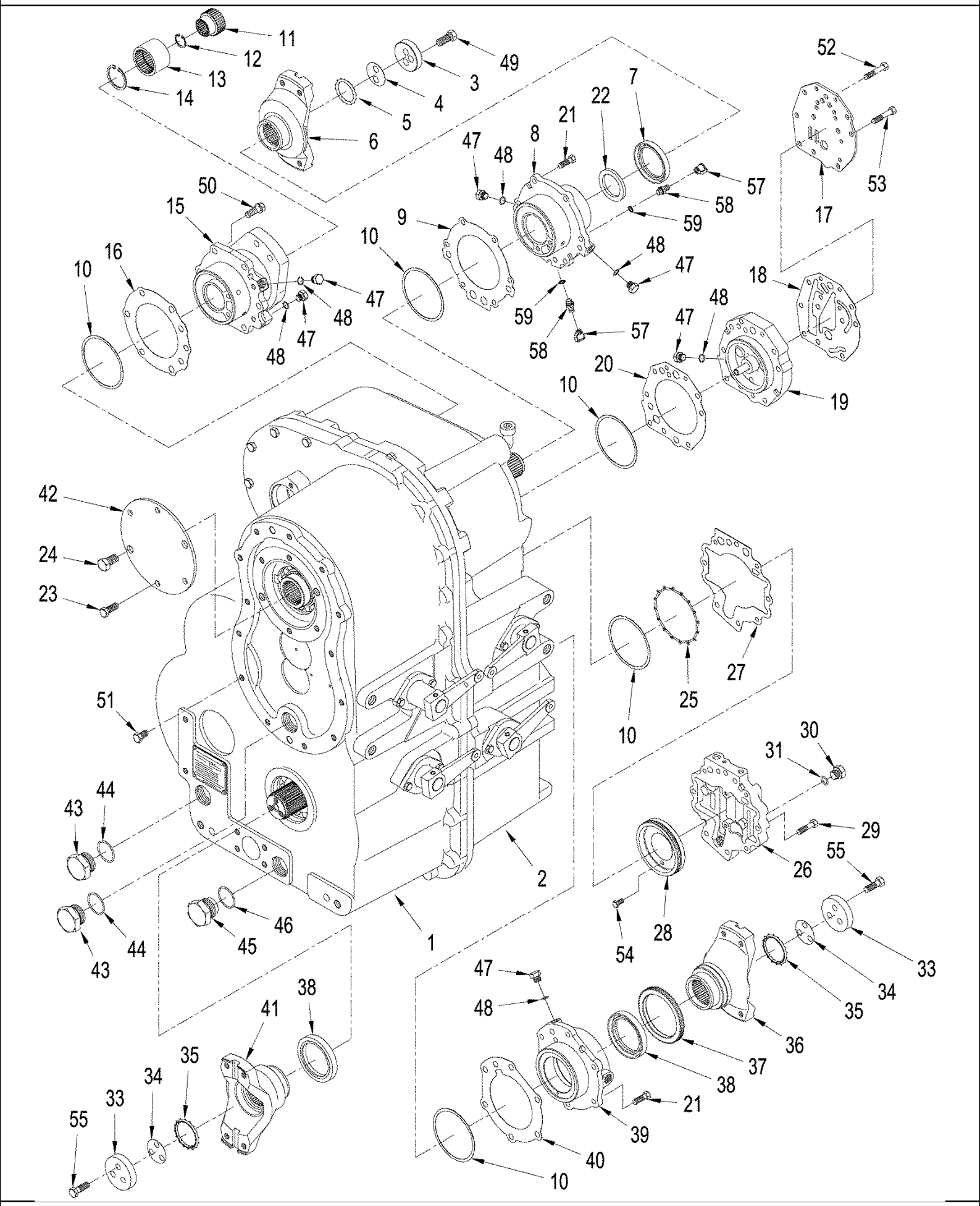

06 -15(02) MANUAL SHIFT TRANSMISSION - COVERS AND YOKES

ссылка	Номер детали	Кол-во	Описание
1	427538A1	1	HOUSING, Rear
2	427588A1	1	HOUSING, Front
3	427539A1	1	PLATE, RETAINING,
4	427560A1	AR	SHIM, 0.10 mm (0,004 in)
4	427561A1	AR	SHIM, 0.30 mm (0,012 in)
4	427562A1	AR	SHIM, 0.70 mm (0,028 in)
5	510207	1	O-RING, -327, 90 Duro, 1.725" ID x .210" Thk, 90 Duro, 1.725" ID x .210" Thk
6	373136A1	1	COUPLING FLANGE, 8C, Input75, TJ425 Manual Shift Transmission, TJ375
6	362563A1	1	COUPLING FLANGE, 8.5C, Input, TJ425 Manual Shift Transmission, TJ375 Heavy Duty, TJ450
7	428159A1	1	SEAL, OIL,
8	428098A1	1	RETAINER, Input
9	428099A1	1	GASKET, Mounting
10	427564A1	AR	SHIM, 0.1 mm (0,004 in)
10	427565A1	AR	SHIM, 0.15 mm (0,006 in)
10	427566A1	AR	SHIM, 0.3 mm (0,012 in)
10	427567A1	AR	SHIM, 0.5 mm (0,020 in)
10	427568A1	AR	SHIM, 0.7 mm (0,028 in)
11	362566A1	1	ADAPTER, Pump
12	301642	1	RING, SNAP, M28, Int,
13	362567A1	1	COUPLING,
14	86639140	1	RING, SNAP, M50 Int, Snap
15	428126A1	1	RETAINER, Second Shaft
16	428100A1	1	GASKET, Mounting, Second Shaft
17	427592A1	1	PLATE, RETAINING,
18	427591A1	1	GASKET, Mounting
19	427557A1	1	RETAINER, Third Shaft
20	427582A1	1	GASKET, Mounting, Third Shaft
21	412160	12	BOLT, Hex, M10 x 1.25 x 30, Cl8.8, Full Thd,
22	427569A1	1	WASHER, Retaining
23	86637971	4	BOLT, Hex, M12 x 1.25 x 30, 8.8, Full Thd,
24	427559A1	2	SCREW,
25	428149A1	1	O-RING,
26	427586A1	1	PLATE ASSY., Ditch
27	427583A1	1	GASKET, Mounting
28	427556A1	1	RETAINER, Fourth Shaft
29	86637963	5	BOLT, Hex, M10 x 1.25 x 40, 8.8, Full Thd,
30	86589753	1	PLUG, M18 x 15, Inc. 31
31	86639043	1	O-RING,
32	86642451	1	CIRCLIP, Snap
33	427515A1	2	PLATE, RETAINING,
34	427517A1	AR	SHIM, 0,10 mm (0,004 in)
34	427519A1	AR	SHIM, 0,30 mm (0,012 in)
35	428165A1	2	O-RING,
36	427551A1	1	YOKE, 8C, Output, TJ425 Manual Shift Transmission, TJ375
36	427550A1	1	YOKE, 8,5C, Output, TJ425 Manual Shift Transmission, TJ375 Heavy Duty, TJ450

ссылка	Номер детали	Кол-во	Описание
37	427549A1	1	RING,
38	427514A1	2	SEAL, OIL,
39	427563A1	1	RETAINER, Output
40	427547A1	1	GASKET, Mounting
41	373138A1	1	COUPLING FLANGE, 8C, Output, TJ425 Manual Shift Transmission, TJ375
41	362604A1	1	COUPLING FLANGE, 8,5C, Output, TJ425 Manual Shift Transmission, TJ375 Heavy Duty, TJ450
42	427558A1	1	COVER, Power Takeoff
43	303493A1	2	PLUG, Hex Soc, M42 x 2, ORB, Drain; M42 orb x 2; Inc. 44
44	86639047	2	O-RING, Cl 6, 38.6MM ID x 2.9 Thk, 1-1/2 ID x 7/64
45	375456A1	1	PLUG, DRAIN, M42 orb x 2; Inc. 46
46	86639047	1	O-RING, Cl 6, 38.6MM ID x 2.9 Thk, 1-1/2 ID x 7/64
47	220064A1	3	PLUG, M14 x 1.5, ORB, M14 - 1.5; Inc. 50
48	86639042	3	O-RING, Cl 6, 11.3MM ID x 2.2 Thk, 11.3 ID x 2.2
49	428181A1	3	BOLT,
50	428180A1	6	BOLT, M10 x 35
51	86637972	1	BOLT, Hex, M12 x 1.25 x 20, 8.8, Full Thd, M12 x 20; 8.8
52	86637967	2	BOLT, Hex, M10 x 1.25 x 45, 8.8, Full Thd, M10 x 45; 8.8
53	86637964	4	BOLT, Hex, M10 x 1.25 x 50, 8.8, Full Ths, M10 x 50; 8.8
54	16043224	2	BOLT, Hex, M8 x 16, 8.8, Full Thd,
55	86637970	6	BOLT, Hex, M12 x 1.25 x 35, 8.8, Full Thd, M12 x 35; 8.8
56	86637974	4	BOLT, Hex, M12 x 1.25 x 25, 8.8, Full Thd, M12 x 25; 8.8
	178889A1	2	FITTING, Diagnostic; Inc. 57, 58
57	86502604	1	DUST CAP, Dust
58	NSS	1	NOT SERVICED SEPARATELY, Fitting, Diagnostic, Inc. 59
59	86639042	1	O-RING, Cl 6, 11.3MM ID x 2.2 Thk,

06 -15(03) MANUAL SHIFT TRANSMISSION - REAR HOUSING

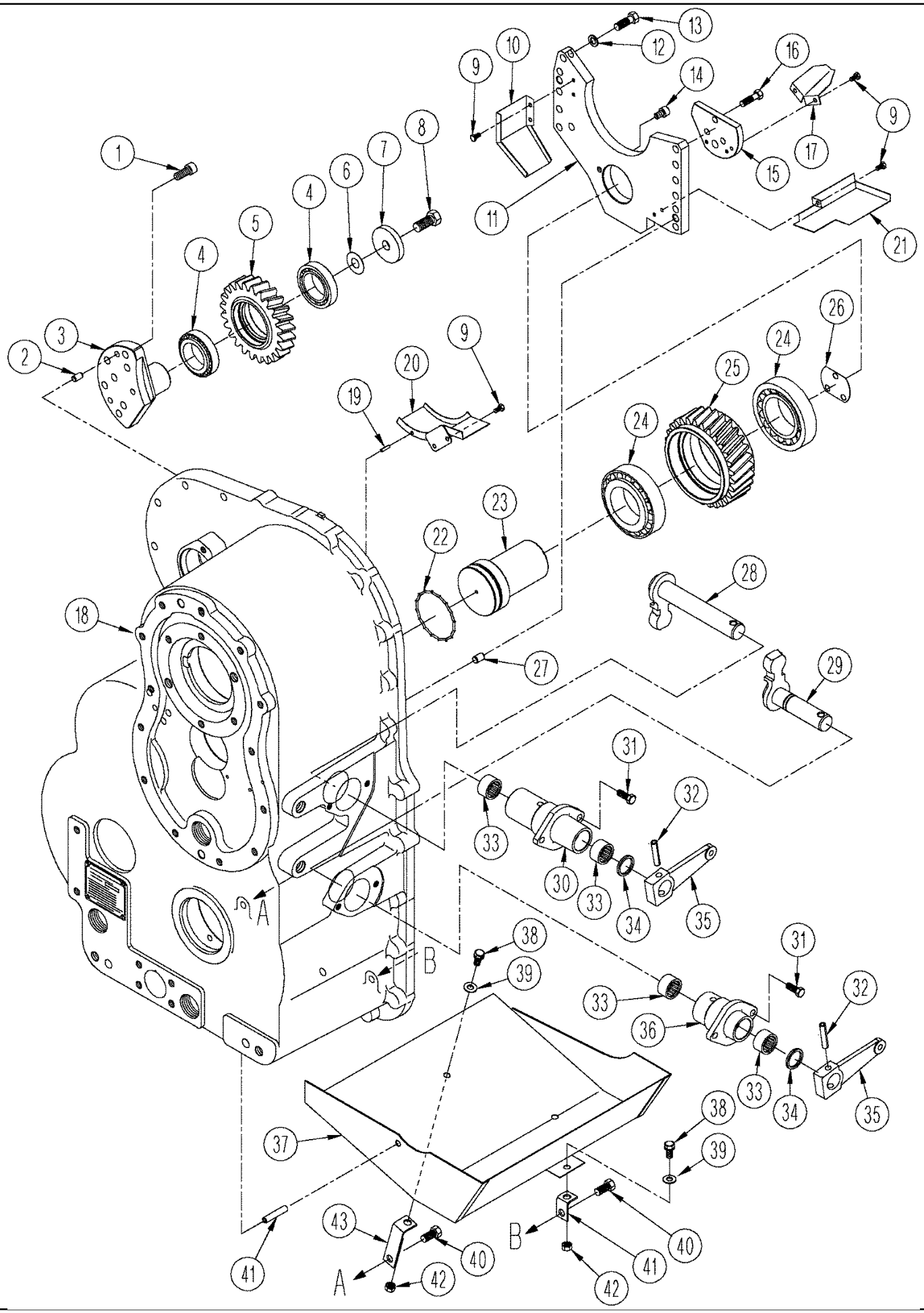

06 -15(03) MANUAL SHIFT TRANSMISSION - REAR HOUSING

ссылка	Номер детали	Кол-во	Описание
1	427666A1	7	SCREW, Socket
2	428151A1	2	DOWEL, Dowel
3	427664A1	1	SHAFT, Idler
4	427662A1	2	BEARING, ROLLER, TAPERED,
5	427659A1	1	GEAR, IDLER, Reverse
6	S9950S00F	AR	SHIM,
6	S9960S00F	AR	SHIM,
6	S9970S00F	AR	SHIM,
6	S9980S00F	AR	SHIM,
7	427661A1	1	WASHER, Retaining
8	86637960	1	BOLT, Hex, M16 x 1.5 x 35, 10.9, Full Thd, Hex, M16 x 1.5 x 35, 10.9, Full Thd
9	86977726	7	BOLT, Hex, M6 x 12, 8.8,
10	427578A1	1	TROUGH,
11	427616A1	1	PLATE, SUPPORT,
12	428172A1	12	WASHER, Lock
13	86637970	12	BOLT, Hex, M12 x 1.25 x 35, 8.8, Full Thd, M12 x 35; 8,8
14	427553A1	1	SCREW, Socket
15	427554A1	1	WASHER, Retaining
16	86637966	3	BOLT, Hex, M10 x 1.25 x 35, 8.8, Full Thd, M10 x 35; 8,8
17	427576A1	1	TROUGH,
18	427538A1	1	HOUSING,
19	86639257	1	PIN, LOCK, M5 x 18, Slotted,
20	427579A1	1	TROUGH, First Gear
21	427580A1	1	TROUGH, Second Gear
22	428157A1	1	O-RING,
23	427615A1	1	SHAFT,
24	427613A1	2	BEARING, ROLLER, TAPERED,
25	427614A1	1	GEAR, IDLER,
26	427570A1	AR	SHIM, 0,10 mm (0,004 in)
26	427571A1	AR	SHIM, 0,15 mm (0,006 in)
26	427572A1	AR	SHIM, 0,30 mm (0,012 in)
26	427573A1	AR	SHIM, 0,70 mm (0,028 in)
27	428152A1	2	DOWEL, Dowel
28	428144A1	1	LEVER, 1-R Gears
29	428146A1	1	LEVER, A-B Range
30	428140A1	1	SUPPORT, Lever, 1-R Gears
31	412159	4	BOLT, Hex, M10 x 1.25 x 25, 8.8, Full Thd, M10 x 25; 8,8
32	SM831050	3	PIN,
33	428128A1	4	BEARING, NEEDLE,
34	428129A1	2	SEAL, OIL,
35	428127A1	2	LEVER, Range / Gear Shifter
36	428142A1	1	SUPPORT, Lever, A-B Range
37	427546A1	1	BAFFLE, Oil
38	86637962	2	BOLT, Hex, M10 x 1.25 x 20, 8.8, Full Thd, M10 x 20; 8,8
39	86624176	2	WASHER, M10 x 20 x 2,

ссылка	Номер детали	Кол-во	Описание
40	86637974	2	BOLT, Hex, M12 x 1.25 x 25, 8.8, Full Thd, M12 x 25; 8,8
41	427548A1	1	STRAP, Left-Hand
42	SM8911240	2	NUT,
43	427545A1	1	STRAP, Right-Hand

06 -15(04) MANUAL SHIFT TRANSMISSION - FRONT HOUSING

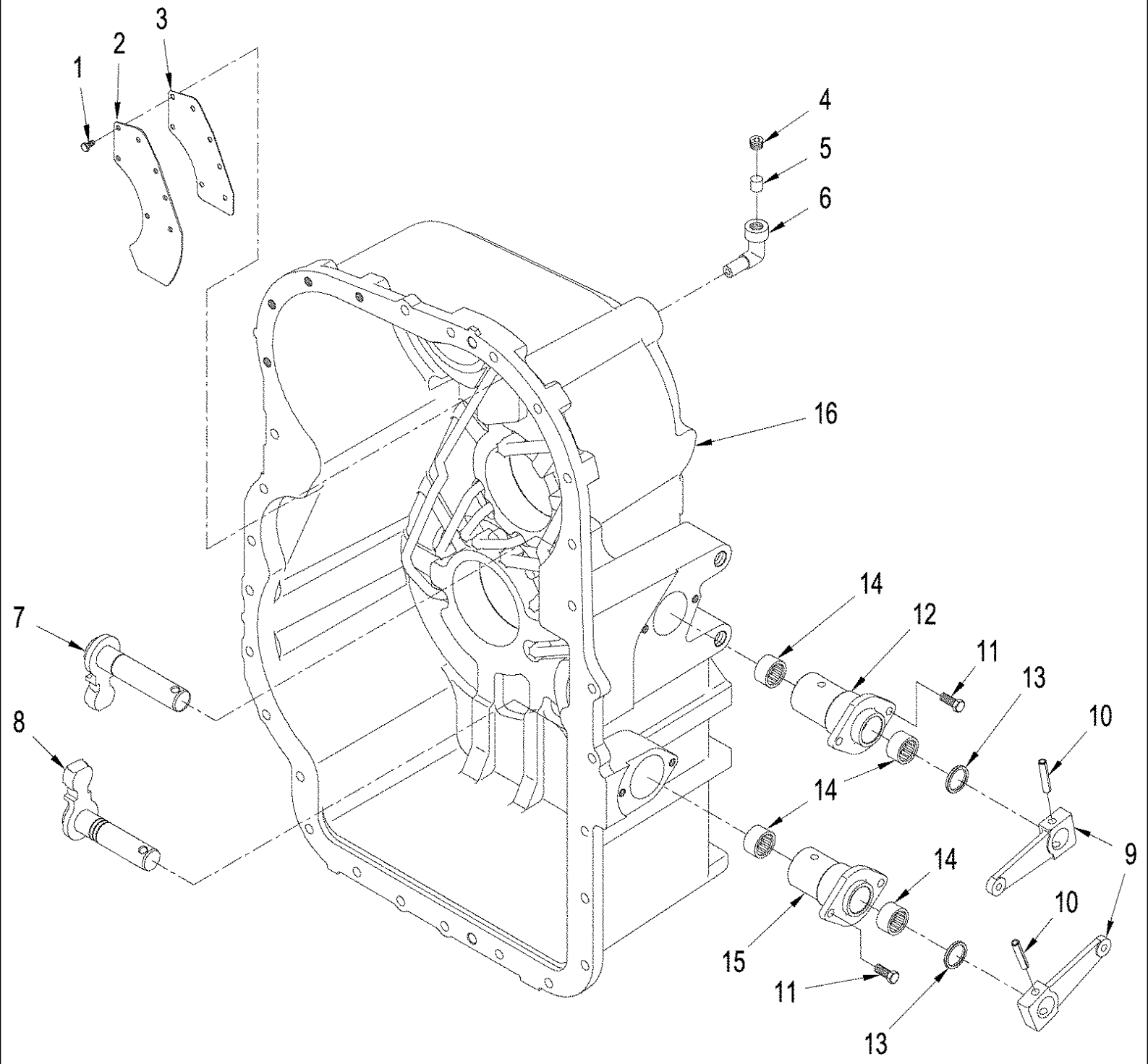

06 -15(04) MANUAL SHIFT TRANSMISSION - FRONT HOUSING

ссылка	Номер детали	Кол-во	Описание
1	86977726	7	BOLT, Hex, M6 x 12, 8.8,
2	427575A1	1	BAFFLE,
3	427574A1	1	GASKET,
4	428156A1	1	PLUG,
5	427524A1	1	BREATHER,
6	370632A1	1	TUBE, Breather
7	428145A1	1	LEVER, 2-3 Gears
8	428147A1	1	LEVER, C-D Range
9	428127A1	2	LEVER, Range / Gear Shift
10	SM831050	2	PIN,
11	412159	4	BOLT, Hex, M10 x 1.25 x 25, 8.8, Full Thd, M10 x 25; 8,8
12	428141A1	1	SUPPORT, Lever, 2-3 Gears
13	428129A1	2	SEAL, OIL,
14	428128A1	4	BEARING, NEEDLE,
15	428143A1	1	SUPPORT, Lever, C-D Range
16	427588A1	1	HOUSING, Front

06 -15(05) MANUAL SHIFT TRANSMISSION - SHAFT ASSY AND SHIFTER FORKS

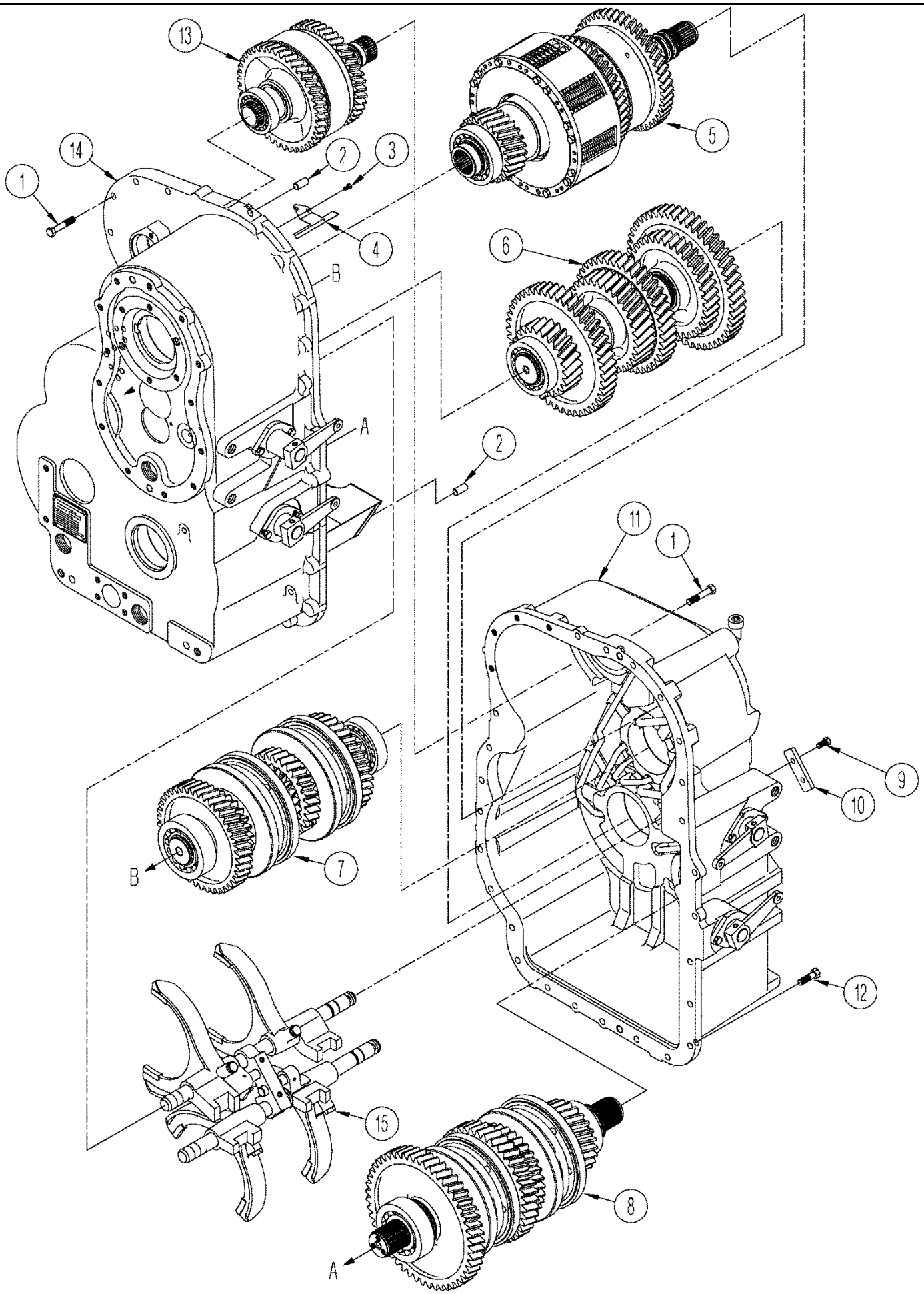

06 -15(05) MANUAL SHIFT TRANSMISSION - SHAFT ASSY AND SHIFTER FORKS

ссылка	Номер детали	Кол-во	Описание
1	86637975	13	BOLT, Hex, M12 x 1.25 x 60, 8.8, Full Thd, M12 x 60; 8,8
2	427530A1	2	DOWEL, Dowel
3	86977726	2	BOLT, Hex, M6 x 12, 8.8,
4	427577A1	1	TROUGH, Reverse Idler
5	428120A1	1	SHAFT ASSY., Input, See Figure : 06-15 (07A)
6	427681A1	1	SHAFT ASSY., Fourth, See Figure : 06-15 (10)
7	427647A1	2	SHAFT ASSY., Third, See Figure : 06-15 (9)
8	427690A1	1	SHAFT ASSY., Fifth, See Figure : 06-15 (11)
9	86637962	2	BOLT, Hex, M10 x 1.25 x 20, 8.8, Full Thd, M10 x 20; 8,8
10	428138A1	1	PLATE,
11	427588A1	1	HOUSING, Front
12	86637969	16	BOLT, Hex, M12 x 1.25 x 25, 8.8, Full Thd, M12 x 40; 8,8
13	428121A1	1	SHAFT ASSY., Second, See Figure : 06-15 (8)
14	427538A1	1	HOUSING, Rear
15	428130A1	1	FORK, SHIFTER, 1-R Gears, See Figure : 06-15 (6)
15	428131A1	1	FORK, SHIFTER, 2-3 Gears, See Figure : 06-15 (6)
15	428133A1	1	FORK, SHIFTER, C-D Range, See Figure : 06-15 (6)
15	428132A1	1	FORK, SHIFTER, A-B Range, See Figure : 06-15 (6)

06 -15(06) MANUAL SHIFT TRANSMISSION - SHIFTER FORKS

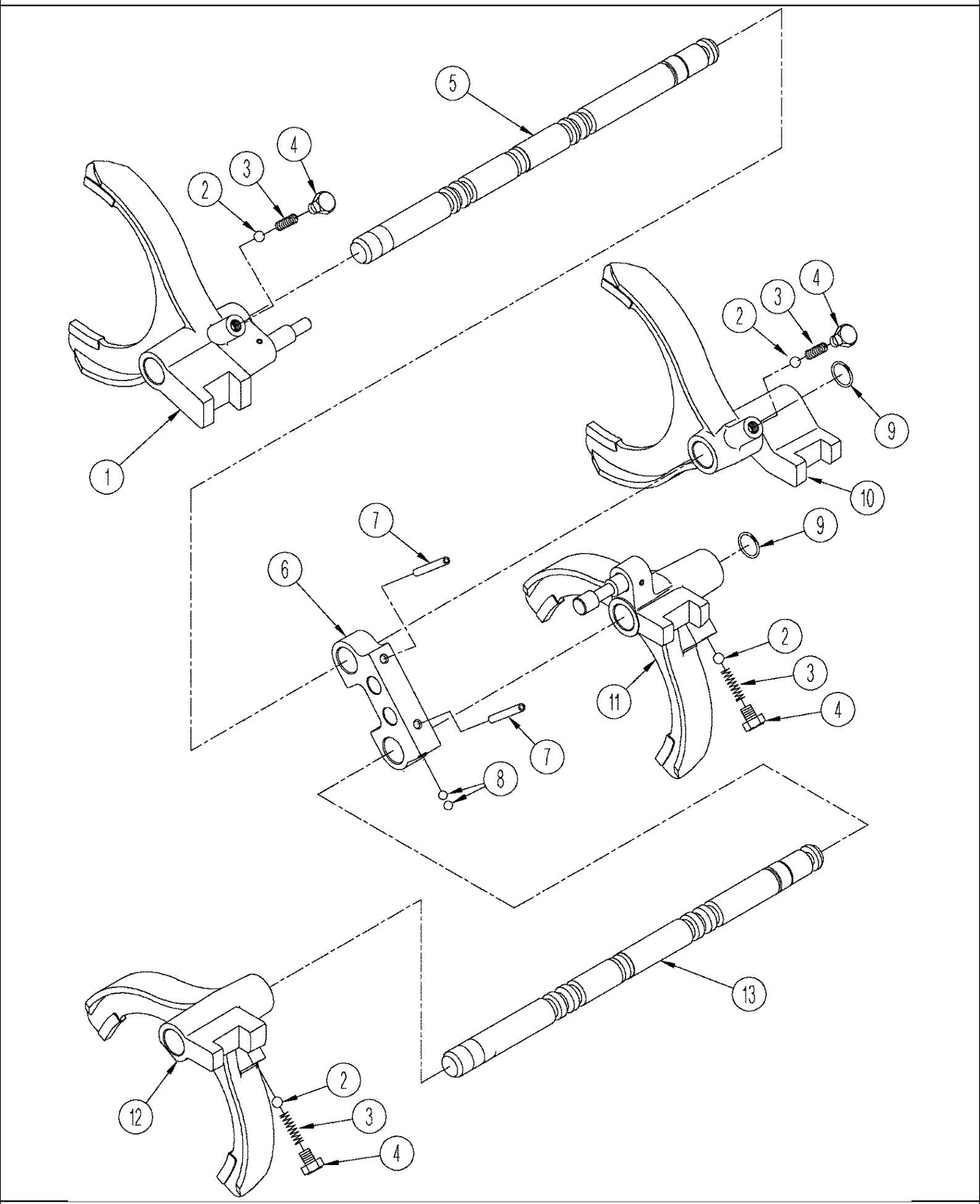

06 -15(06) MANUAL SHIFT TRANSMISSION - SHIFTER FORKS

ссылка	Номер детали	Кол-во	Описание
1	428130A1	1	FORK, SHIFTER, 1-R Gears
2	428155A1	4	BALL,
3	428139A1	4	SPRING,
4	428154A1	4	PLUG,
5	428135A1	1	ROD, Speed Shaft
6	428134A1	1	PLATE, Interlock
7	86639258	2	PIN, LOCK, M8 x 60, Slotted,
8	428150A1	2	BALL,
9	428137A1	2	O-RING,
10	428131A1	1	FORK, SHIFTER, 2-3 Gears
11	428133A1	1	FORK, SHIFTER, C-D Range
12	428132A1	1	FORK, SHIFTER, A-B Range
13	428136A1	1	ROD, Range Shift

06 -15(07A) MANUAL SHIFT TRANSMISSION - INPUT SHAFT ASSY

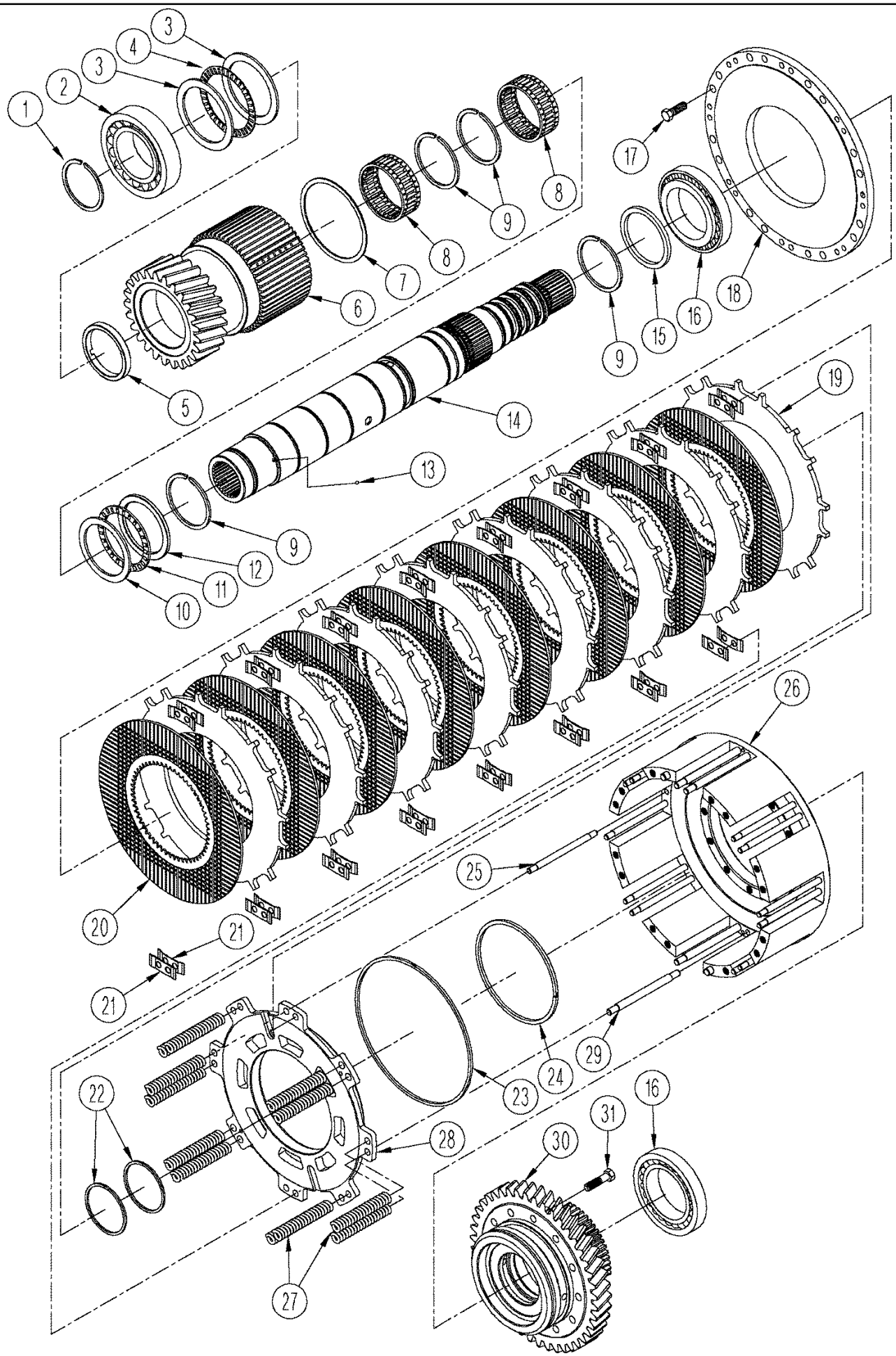

06 -15(07A) MANUAL SHIFT TRANSMISSION - INPUT SHAFT ASSY

ссылка	Номер детали	Кол-во	Описание
	428120A1	1	SHAFT ASSY., Input, 7, Inc. 1-31, See Figure(s) : 06-15 (07B)
1	427643A1	AR	RING, SNAP, 2,4 mm
1	427644A1	AR	RING, 2,5 mm
1	427645A1	AR	RING, 2,6 mm
1	427646A1	AR	RING, 2,7 mm
2	427613A1	1	BEARING, ROLLER, TAPERED,
3	427620A1	2	WASHER, THRUST,
4	427617A1	1	BEARING, THRUST,
5	427619A1	1	COLLAR,
6	427610A1	1	GEAR, Input
7	427608A1	1	SNAP RING,
8	427612A1	2	BEARING, NEEDLE,
9	S5040S00F	3	RING, Retaining
10	S5230S00F	1	WASHER, THRUST,
11	A75158	1	BEARING, THRUST,
12	427618A1	2	WASHER, THRUST,
13	S14701960	1	BALL,
14	428101A1	1	SHAFT, High/Low Input
15	427621A1	AR	WASHER, 5,10 mm
15	427622A1	AR	WASHER, 5,15 mm
15	427623A1	AR	WASHER, 5,20 mm
15	427624A1	AR	WASHER, 5,25 mm
15	427625A1	AR	WASHER, 5,30 mm
15	427626A1	AR	WASHER, 5,35 mm
15	427627A1	AR	WASHER, 5,40 mm
15	427628A1	AR	WASHER, 5,45 mm
15	427629A1	AR	WASHER, 5,50 mm
15	427630A1	AR	WASHER, 5,55 mm
15	427631A1	AR	WASHER, 5,60 mm
15	427632A1	AR	WASHER, 5,65 mm
15	427633A1	AR	WASHER, 5,70 mm
15	427634A1	AR	WASHER, 5,75 mm
15	427635A1	AR	WASHER, 5,80 mm
15	427636A1	AR	WASHER, 5,85 mm
15	427637A1	AR	WASHER, 5,90 mm
15	427638A1	AR	WASHER, 5,95 mm
15	427639A1	AR	WASHER, 6,0 mm
15	427640A1	AR	WASHER, 6,05 mm
15	427641A1	AR	WASHER, 6,10 mm
15	427642A1	AR	WASHER, 6,15 mm
16	428112A1	2	BEARING ASSY,
17	412160	10	BOLT, Hex, M10 x 1.25 x 30, Cl8.8, Full Thd,
18	427595A1	1	COVER,
19	427602A1	AR	DISC, CLUTCH, Steel, If Used. (6.8 mm Thick)
19	427603A1	AR	DISC, CLUTCH, Steel, If Used. (7.2 mm Thick)

06 -15(07A) MANUAL SHIFT TRANSMISSION - INPUT SHAFT ASSY

ссылка	Номер детали	Кол-во	Описание
20	427601A1	8	DISC, CLUTCH, Faced
21	427606A1	32	SPRING, Clutch Separator
22	S4410S00F	2	RING,
23	427600A1	1	SEALRING,
24	427599A1	1	SEALRING,
25	427605A1	12	GUIDE,
26	427607A1	1	DRUM, Clutch
27	427596A1	12	SPRING,
28	427604A1	1	PISTON, Clutch
29	427597A1	4	GUIDE,
30	428119A1	1	GEAR, High
31	86637963	12	BOLT, Hex, M10 x 1.25 x 40, 8.8, Full Thd,

06 -15(07B) MANUAL SHIFT TRANSMISSION - INPUT SHAFT ASSY

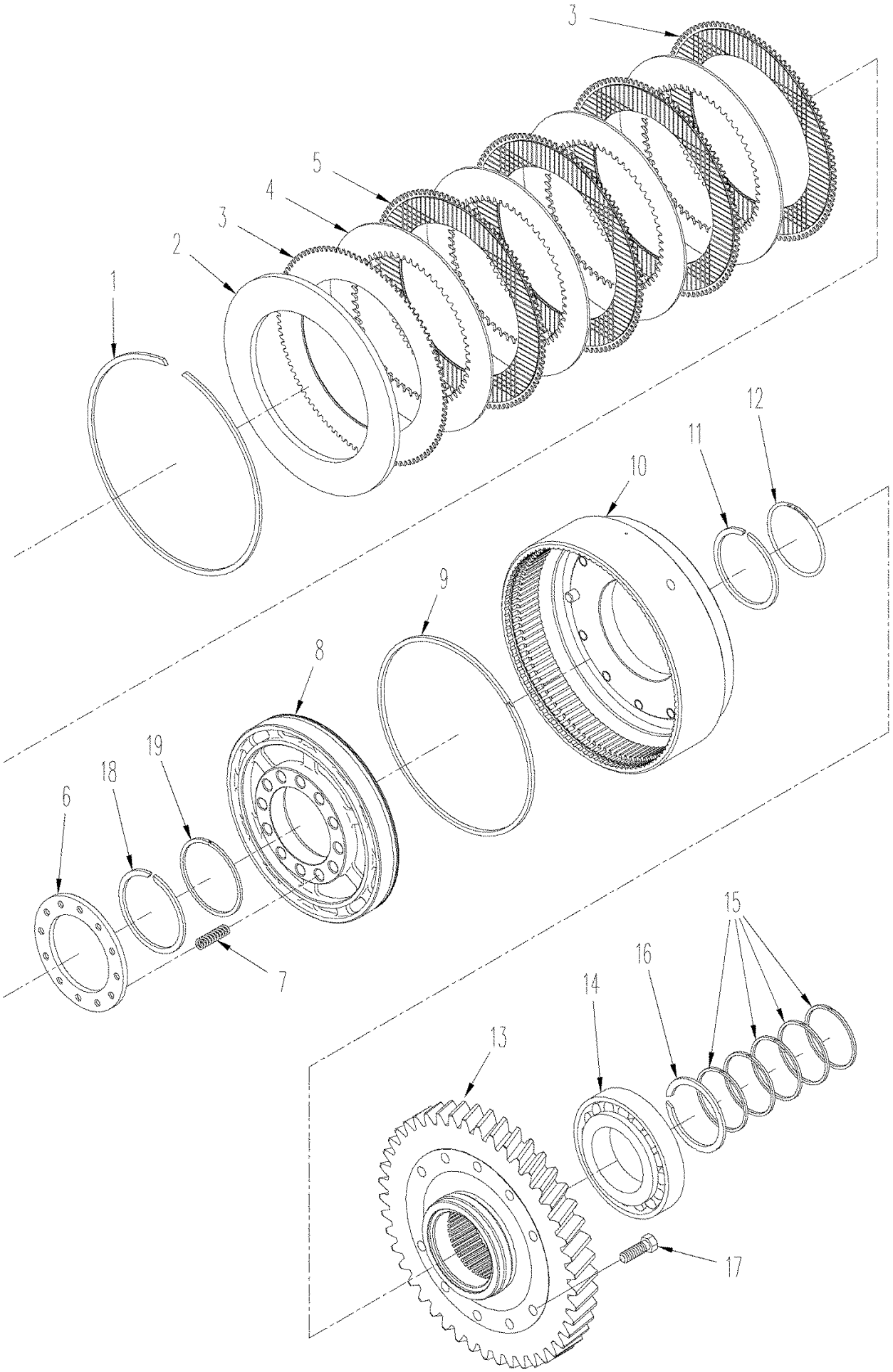

06 -15(07B) MANUAL SHIFT TRANSMISSION - INPUT SHAFT ASSY

ссылка	Номер детали	Кол-во	Описание
	428120A1	1	SHAFT ASSY., Input, 7, Inc. 1 -19, See Figure(s) : 06-09 (07A)
1	428108A1	1	SNAP RING,
2	428104A1	1	PLATE, Clutch End
3	428110A1	2	DISC, CLUTCH, Faced Clutch
4	S4070S00F	AR	DISC, CLUTCH, If Used
4	S4110S00F	AR	DISC, CLUTCH, If Used
5	427534A1	3	DISC, CLUTCH, Faced Clutch
6	428109A1	1	PLATE, Spring Return
7	S2640S00F	12	SPRING,
8	428111A1	1	PISTON, Clutch
9	S2630S00F	1	RING,
10	428106A1	1	DRUM, High / Low Clutch
11	428163A1	1	SNAP RING, Retaining
12	428107A1	1	O-RING,
13	428105A1	1	GEAR,
14	428103A1	2	BEARING, ROLLER, TAPERED,
15	427674A1	AR	SHIM, 2,5 mm
15	427675A1	AR	SHIM, 2,6 mm
15	427676A1	AR	SHIM, 2,7 mm
15	427678A1	AR	SHIM, 2,8 mm
15	427679A1	AR	SHIM, 2,9 mm
15	427680A1	AR	SHIM, 3,0 mm
16	428102A1	5	RING, SNAP,
17	412160	10	BOLT, Hex, M10 x 1.25 x 30, Cl8.8, Full Thd, M10 x 30; 8.8
18	S5040S00F	1	RING,
19	S4410S00F	1	RING,

06 -15(08) MANUAL SHIFT TRANSMISSION - SECOND SHAFT ASSY

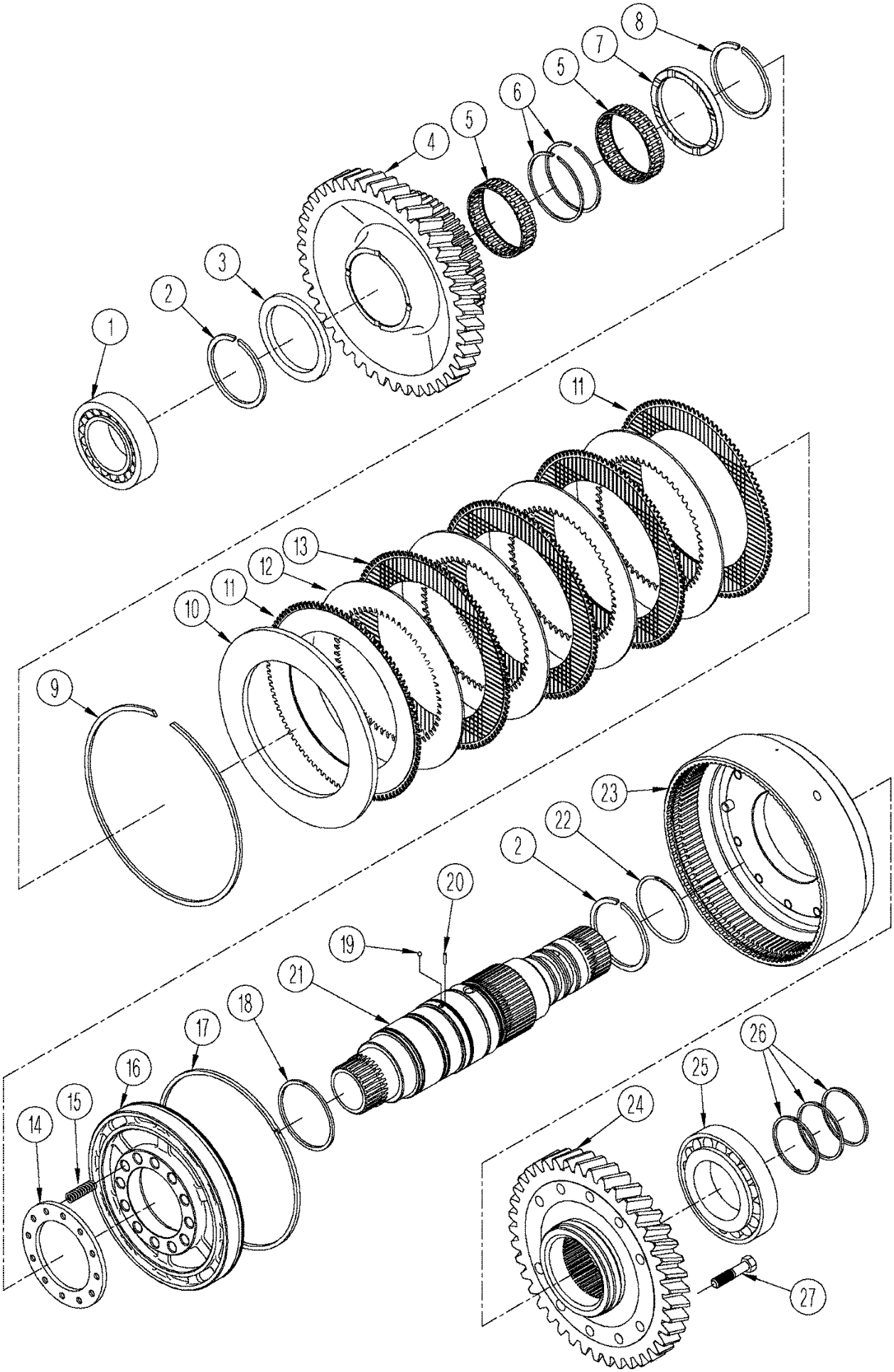

06 -15(08) MANUAL SHIFT TRANSMISSION - SECOND SHAFT ASSY

ссылка	Номер детали	Кол-во	Описание
	428121A1	1	SHAFT ASSY., Second, Inc. 1-27
1	428183A1	1	BEARING,
2	428163A1	1	SNAP RING, Retaining
3	428115A1	1	WASHER, Retaining
4	428116A1	1	GEAR, 42T, High Clutch
5	428125A1	2	BEARING, NEEDLE,
6	428124A1	2	SNAP RING,
7	428117A1	1	WASHER,
8	S5040S00F	1	RING, Retaining
9	428108A1	1	SNAP RING,
10	428104A1	1	PLATE, Clutch End
11	428110A1	2	DISC, CLUTCH, Faced Clutch
12	S4070S00F	AR	DISC, CLUTCH, If Used
12	S4110S00F	AR	DISC, CLUTCH, If Used
13	427534A1	3	DISC, CLUTCH, Faced Clutch
14	428109A1	1	PLATE, Spring Return
15	S2640S00F	12	SPRING,
16	428111A1	1	PISTON, Clutch
17	S2630S00F	1	RING,
18	S4410S00F	1	RING,
19	428153A1	1	BALL,
20	428118A1	1	NEEDLE,
21	428113A1	1	SHAFT ASSY.,
22	428107A1	1	O-RING,
23	428106A1	1	DRUM,
24	428122A1	1	GEAR, Input
25	428103A1	1	BEARING, ROLLER, TAPERED,
26	S3070S00F	3	RING,
27	428178A1	10	BOLT,

06 -15(09) MANUAL SHIFT TRANSMISSION - THIRD SHAFT ASSY

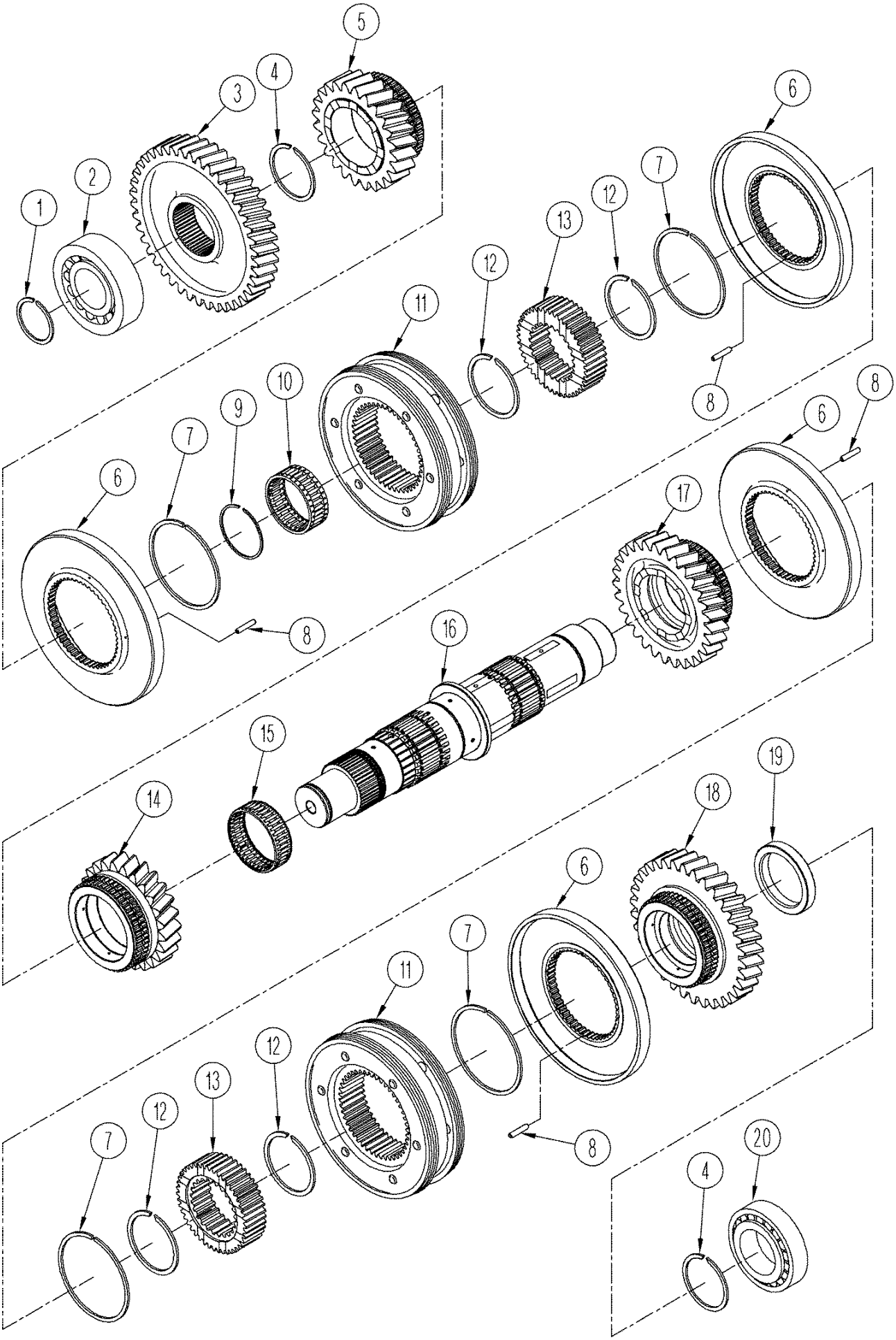

06 -15(09) MANUAL SHIFT TRANSMISSION - THIRD SHAFT ASSY

ссылка	Номер детали	Кол-во	Описание
	427647A1	1	SHAFT ASSY., Third, Inc. 1-20
1	427668A1	AR	SNAP RING, 2,5 mm
1	427669A1	AR	SNAP RING, 2,6 mm
1	427670A1	AR	SNAP RING, 2,7 mm
1	427671A1	AR	SNAP RING, 2,8 mm
1	427672A1	AR	SNAP RING, 2,9 mm
1	427673A1	AR	SNAP RING, 3,0 mm
2	428074A1	1	BEARING, ROLLER, TAPERED,
3	427656A1	1	GEAR,
4	S5040S00F	2	RING, Retaining
5	372071A1	1	GEAR, First
6	427663A1	4	DISC, Synchro Speed
7	427654A1	4	SNAP RING,
8	SM832508	16	PIN,
9	427653A1	1	SNAP RING,
10	S5070S00F	1	BEARING, NEEDLE,
11	427667A1	2	SLEEVE ASSY, Synchro Speed
12	S5090S00F	4	SNAP RING, Retaining
13	372073A1	2	GEAR-SET, Clutch
14	427657A1	1	GEAR, Reverse
15	427660A1	1	BEARING, NEEDLE,
16	427648A1	1	SHAFT, Speed
17	372072A1	1	GEAR, Second
18	427658A1	1	GEAR, Third
19	427651A1	1	SPACER,
20	427649A1	1	BEARING, ROLLER, TAPERED,

06 -15(1) POWER TAKEOFF - CLUTCH LUBRICATION, MANUAL SHIFT TRANSMISSION

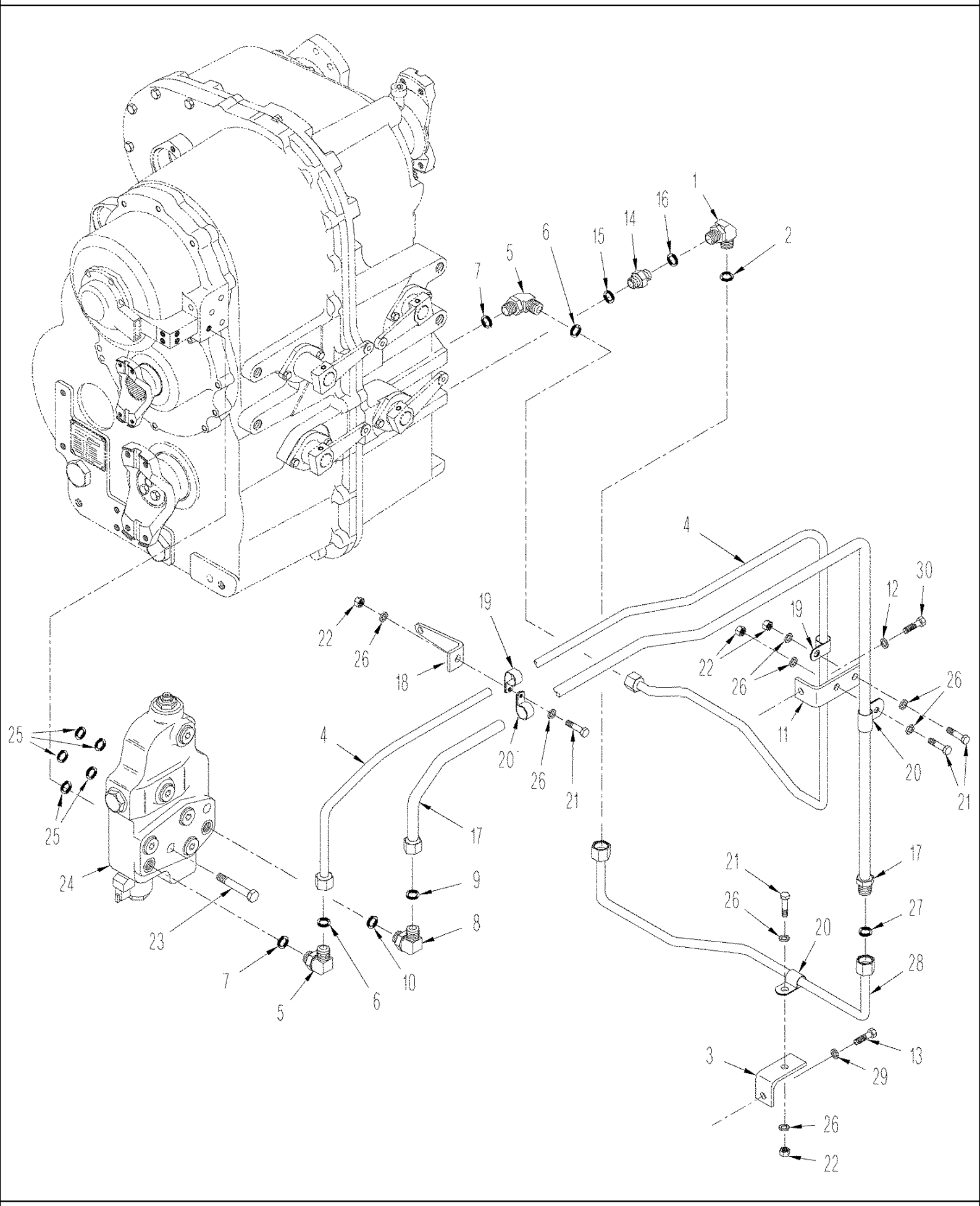

06 -15(1) POWER TAKEOFF - CLUTCH LUBRICATION, MANUAL SHIFT TRANSMISSION

ссылка	Номер детали	Кол-во	Описание
1	84989383	1	ELBOW, 90є, 13/16"-16 ORFS x 13/16"-16 Fem Sw, 90, 13/16 fc sl x swl, Inc. 2
3	435901A1	1	BRACKET,
4	435596A1	1	TUBE ASSY.,
5	86579686	2	ELBOW, 90є, 11/16"-18 ORFS x M14 x 1.5 ORB, 90, M14 or x 10 fcsl, Inc. 6, 7
7	86639042	1	O-RING, Cl 6, 11.3MM ID x 2.2 Thk, 11,3 ID x 2,2
8	86579691	1	ELBOW, 90є, 13/16"-18 ORFS x M18 x 1.5 ORB, Includes 9, 10
10	86639043	1	O-RING, 15,3 ID x 2,2
11	401365A2	1	BRACKET,
12	86625255	1	WASHER, M13.5 x 24.5 x 3, HT,
13	86529976	1	BOLT, Hex, M16 x 35, 10.9, Hex, M16 x 35, 10.9
14	86579676	1	CONNECTOR, HYD., 13/16"-16 ORFS x M18 x 1.5 ORB, 13/16 fc sl x 18 Or, Inc. 15, 16
15	86639045	1	O-RING, Cl 6, 23.6MM ID x 2.9 Thk, 23,6 ID x 2,9
17	435598A1	1	TUBE ASSY.,
18	401398A1	1	BRACKET,
19	9706748	2	CLAMP, 5/8", Insul, 5/16" Bolt,
20	86625036	3	CLAMP, 1/2", Insul, 5/16" Bolt,
21	43235	2	BOLT, Hex, M8 x 30, 10.9, Cap, HH, CL 10.9, M8 x 1.25 x 30
22	43362	1	NUT, M8, Cl 10,
23	355788	2	BOLT, Hex, M10 x 70, 10.9, Cap, HH, CL 10.9, M10 x 1.5 x 70
24	413944A1	1	VALVE, Control, P.T.O., See Figure(s) : 6-23
25	14457081	5	O-RING, -112, Cl 7, .487" ID x .103" Thk,
26	86624184	8	WASHER, M8 x 16 x 1.6, 9 x 16 x 1.6 mm
28	435902A1	1	TUBE ASSY.,
29	86642463	1	WASHER, 17.5 x 30 x 3.0 mm
30	43260	1	BOLT, Hex, M12 x 30, 10.9,
6	9993141	1	O-RING, -012, 90 Duro, .364" ID x .070" Thk,
2	9992298	1	O-RING, -014, 90 Duro, .489" ID x .070" Thk,
9	9992298	1	O-RING, -014, 90 Duro, .489" ID x .070" Thk,
16	9992298	1	O-RING, -014, 90 Duro, .489" ID x .070" Thk,
27	9992298	1	O-RING, -014, 90 Duro, .489" ID x .070" Thk,

06 -15(10) MANUAL SHIFT TRANSMISSION - FOURTH SHAFT ASSY

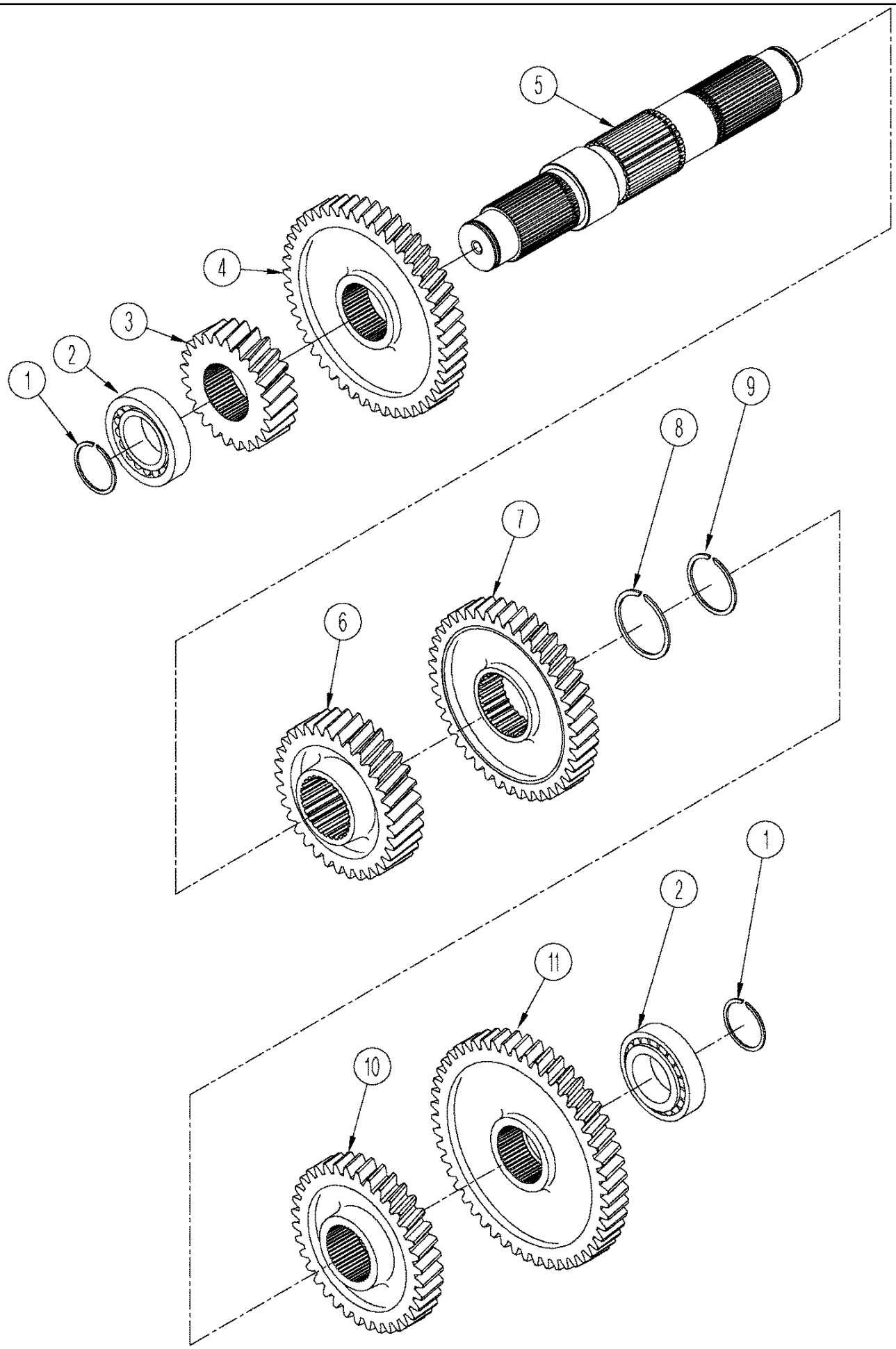

06 -15(10) MANUAL SHIFT TRANSMISSION - FOURTH SHAFT ASSY

ссылка	Номер детали	Кол-во	Описание
	427681A1	1	SHAFT ASSY., Fourth, Inc. 1-11
1	427674A1	AR	SHIM, Retaining, 2,5 mm
1	427675A1	AR	SHIM, Retaining, 2,6 mm
1	427676A1	AR	SHIM, Retaining, 2,7 mm
1	427678A1	AR	SHIM, Retaining, 2,8 mm
1	427679A1	AR	SHIM, Retaining, 2,9 mm
1	427680A1	AR	SHIM, Retaining, 3,0 mm
2	427649A1	2	BEARING, ROLLER, TAPERED,
3	427684A1	1	GEAR, A Range
4	427685A1	1	GEAR, First
5	427682A1	1	SHAFT, Center
6	427686A1	1	GEAR, B Range
7	427687A1	1	GEAR, Second
8	S5090S00F	1	SNAP RING, Retaining
9	S5040S00F	1	RING, Retaining
10	427688A1	1	GEAR, Third
11	427689A1	1	GEAR, D Range

06 -15(11) MANUAL SHIFT TRANSMISSION - FIFTH SHAFT ASSY

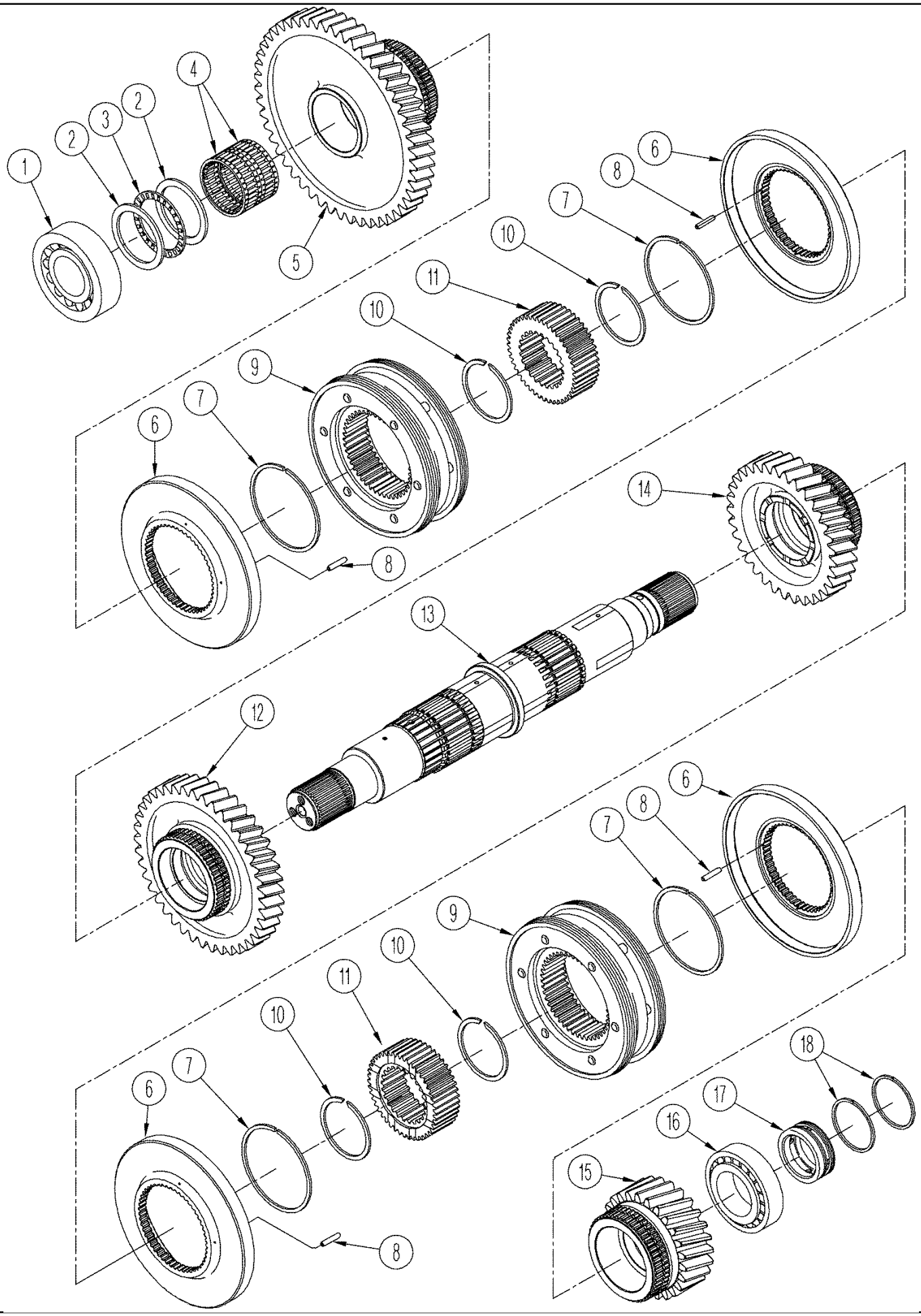

06 -15(11) MANUAL SHIFT TRANSMISSION - FIFTH SHAFT ASSY

ссылка	Номер детали	Кол-во	Описание
	427690A1	1	SHAFT ASSY., Fifth, Inc. 1-18
1	428074A1	1	BEARING, ROLLER, TAPERED,
2	S5230S00F	2	WASHER, THRUST,
3	A75158	1	BEARING, THRUST,
4	S5070S00F	2	BEARING, NEEDLE,
5	428076A1	1	GEAR, A Range
6	428081A1	4	DISC, Synchro Range
7	427654A1	8	SNAP RING,
8	SM832508	16	PIN,
9	428082A1	2	SLEEVE ASSY, Synchro Range
10	S5090S00F	4	SNAP RING, Retaining
11	428075A1	2	HUB, Clutch Range
12	428077A1	1	GEAR, B Range
13	427691A1	1	SHAFT, Output
14	428079A1	1	GEAR, C Range
15	428080A1	1	GEAR, D Range
16	427649A1	1	BEARING, ROLLER, TAPERED,
17	427683A1	1	RING, Carrier Ring
18	S4150S00F	2	RING, Seal

06 -15(12) MANUAL SHIFT TRANSMISSION - CONTROL VALVE ASSY

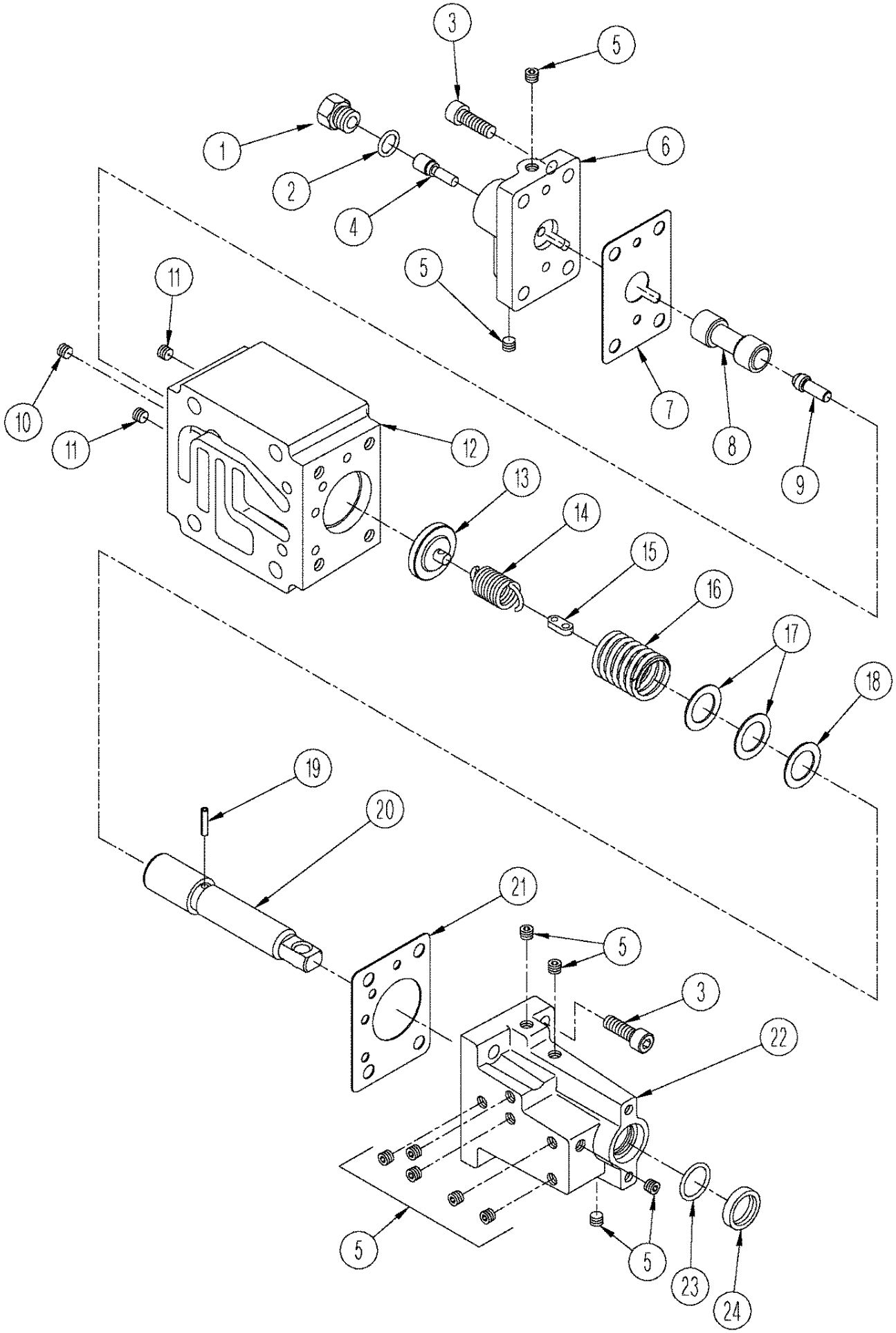

06 -15(12) MANUAL SHIFT TRANSMISSION - CONTROL VALVE ASSY

ссылка	Номер детали	Кол-во	Описание
	428083A1	1	VALVE, Inc. 1-24
1	S6170S00F	1	PLUG, Inc. 2
2	S6180S00F	1	O-RING,
3	S6260S00F	8	SCREW,
4	S6010S00F	1	SPOOL,
5	S6220S00F	11	PLUG,
6	S6020S00F	1	COVER,
7	S6030S00F	1	GASKET, Valve Cover
8	S6040S00F	1	SPOOL,
9	S6160S00F	1	PIN,
10	S6240S00F	1	ORIFICE,
11	S6230S00F	2	ORIFICE,
12	428084A1	1	BODY, VALVE,
13	S6060S00F	1	SEAT, SPRING,
14	S6210S00F	1	SPRING,
15	S6080S00F	1	LINK, CONNECTING,
16	S6150S00F	1	SPRING,
17	S6140S00F	AR	SHIM,
18	S6200S00F	1	SPACER,
19	S6130S00F	1	PIN, ROLL,
20	S6100S00F	1	HOUSING, Control
21	427537A1	1	GASKET,
22	428085A1	1	COVER, Control Stem
23	S6120S00F	1	O-RING,
24	S6110S00F	1	SEAL,

06 -15(13) MANUAL SHIFT TRANSMISSION - LOCKOUT VALVE ASSY

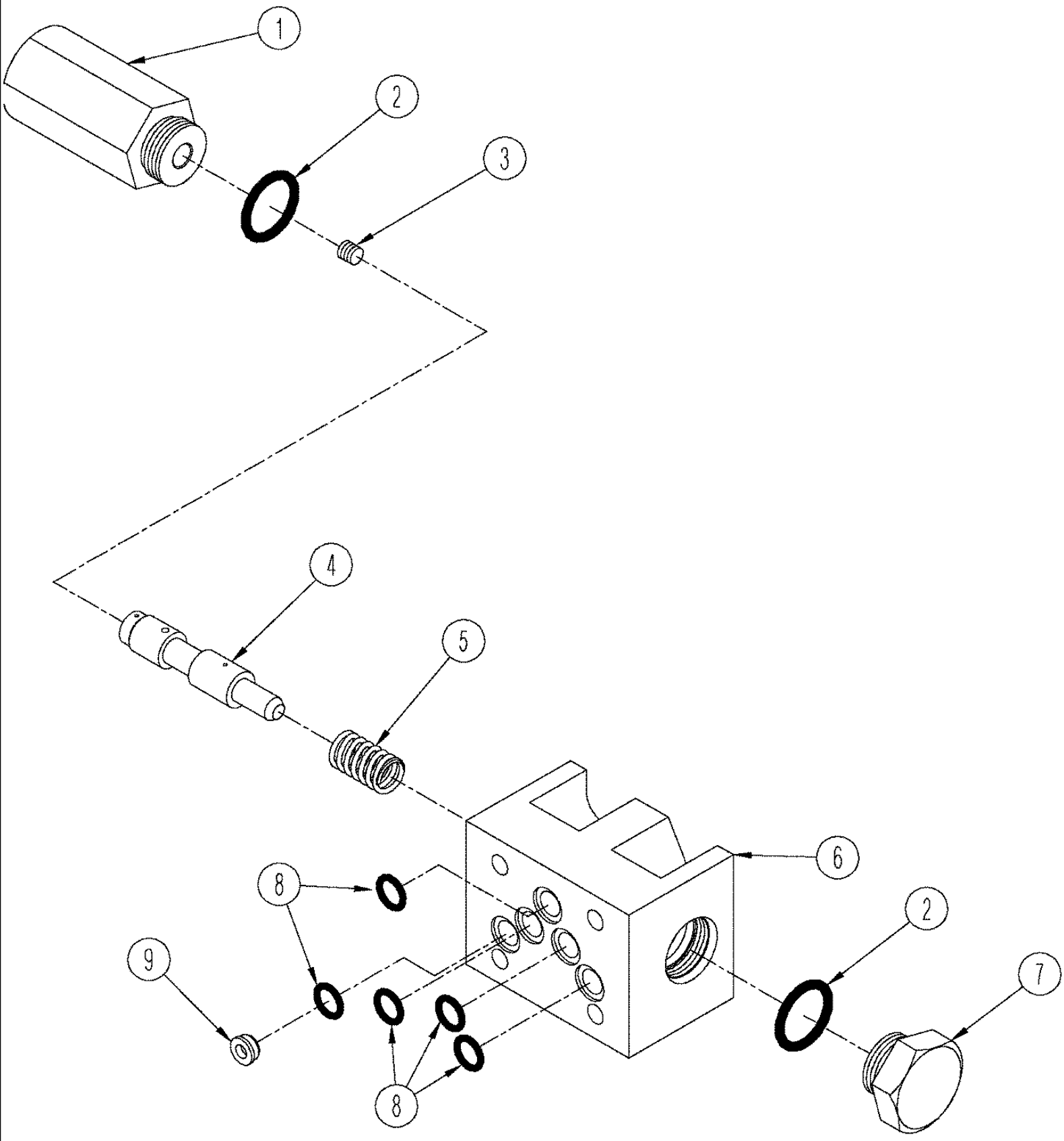

06 -15(13) MANUAL SHIFT TRANSMISSION - LOCKOUT VALVE ASSY

ссылка	Номер детали	Кол-во	Описание
	428091A1	1	VALVE, Lockout, Inc. 1-9
1	428090A1	1	PLUG,
2	428086A1	2	O-RING,
3	428094A1	1	PLUG,
4	428089A1	1	SPOOL,
5	428088A1	1	SPRING,
6	428092A1	1	BODY, VALVE,
7	428087A1	1	PLUG,
8	428093A1	5	O-RING,
9	428095A1	1	ORIFICE,

06 -15(14) MANUAL SHIFT TRANSMISSION - REGULATOR VALVE ASSY

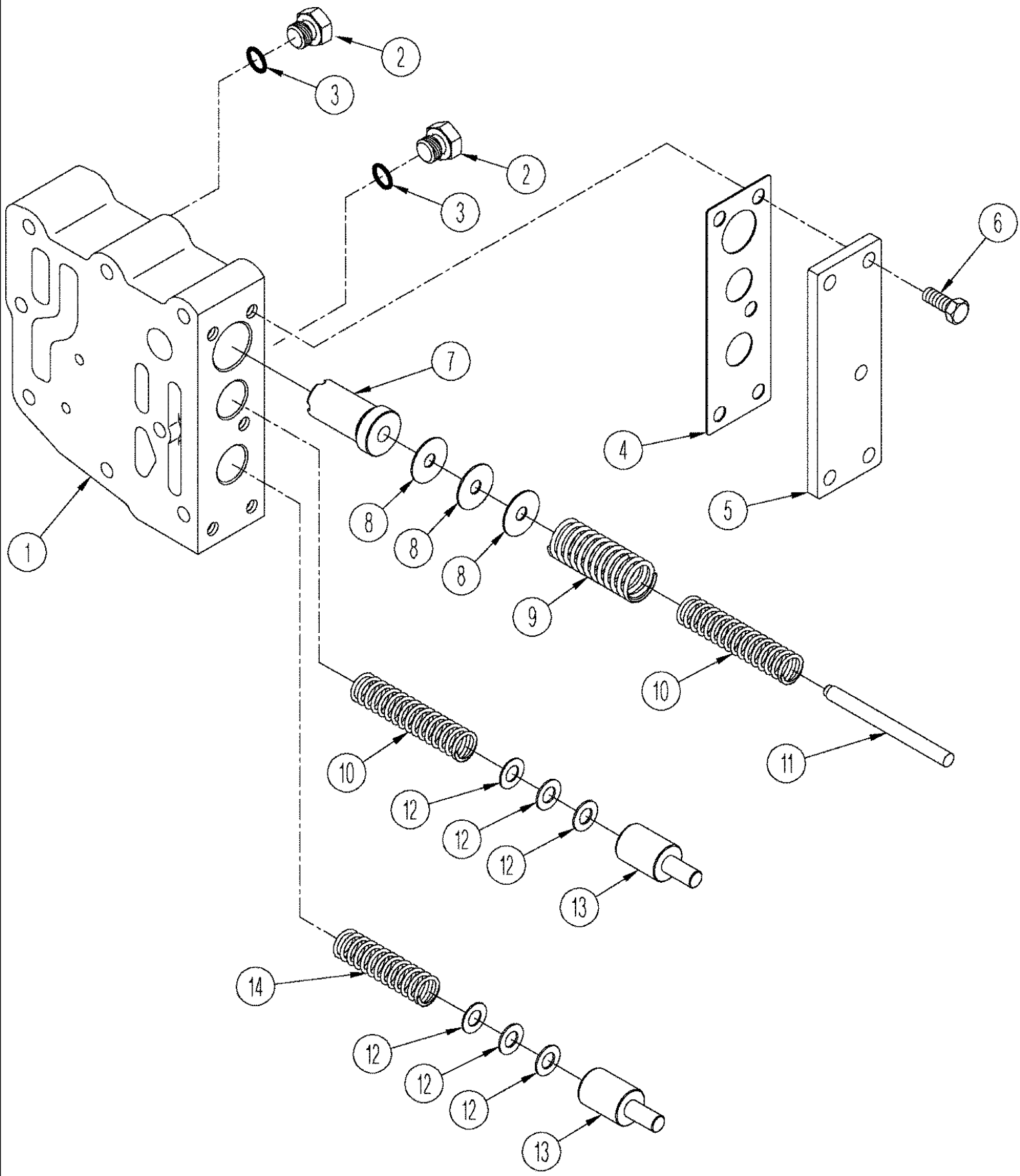

06 -15(14) MANUAL SHIFT TRANSMISSION - REGULATOR VALVE ASSY

ссылка	Номер детали	Кол-во	Описание
	428096A1	1	VALVE, Regulator, Inc. 1-14
1	428097A1	1	BODY,
2	220064A1	2	PLUG, M14 x 1.5, ORB, M 14, Inc. 3
3	86639042	2	O-RING, Cl 6, 11.3MM ID x 2.2 Thk, 11.9 ID x 2.2
4	S7090S00F	1	GASKET,
5	S7110S00F	1	COVER,
6	120104	5	BOLT, Hex, M8 x 20, 8.8,
7	S7030S01F	1	VALVE, Pressure Regulator
8	S7010S00F	AR	SHIM,
9	S7120S00F	1	SPRING,
10	S7050S00F	2	SPRING,
11	S7020S00F	1	STEM, Pressure Regulator
12	S7080S00F	AR	SHIM,
13	S7060S00F	2	VALVE, Lube
14	S7070S00F	1	SPRING,

06 -15(2) POWER TAKEOFF - CLUTCH LUBRICATION, POWER SHIFT TRANSMISSION

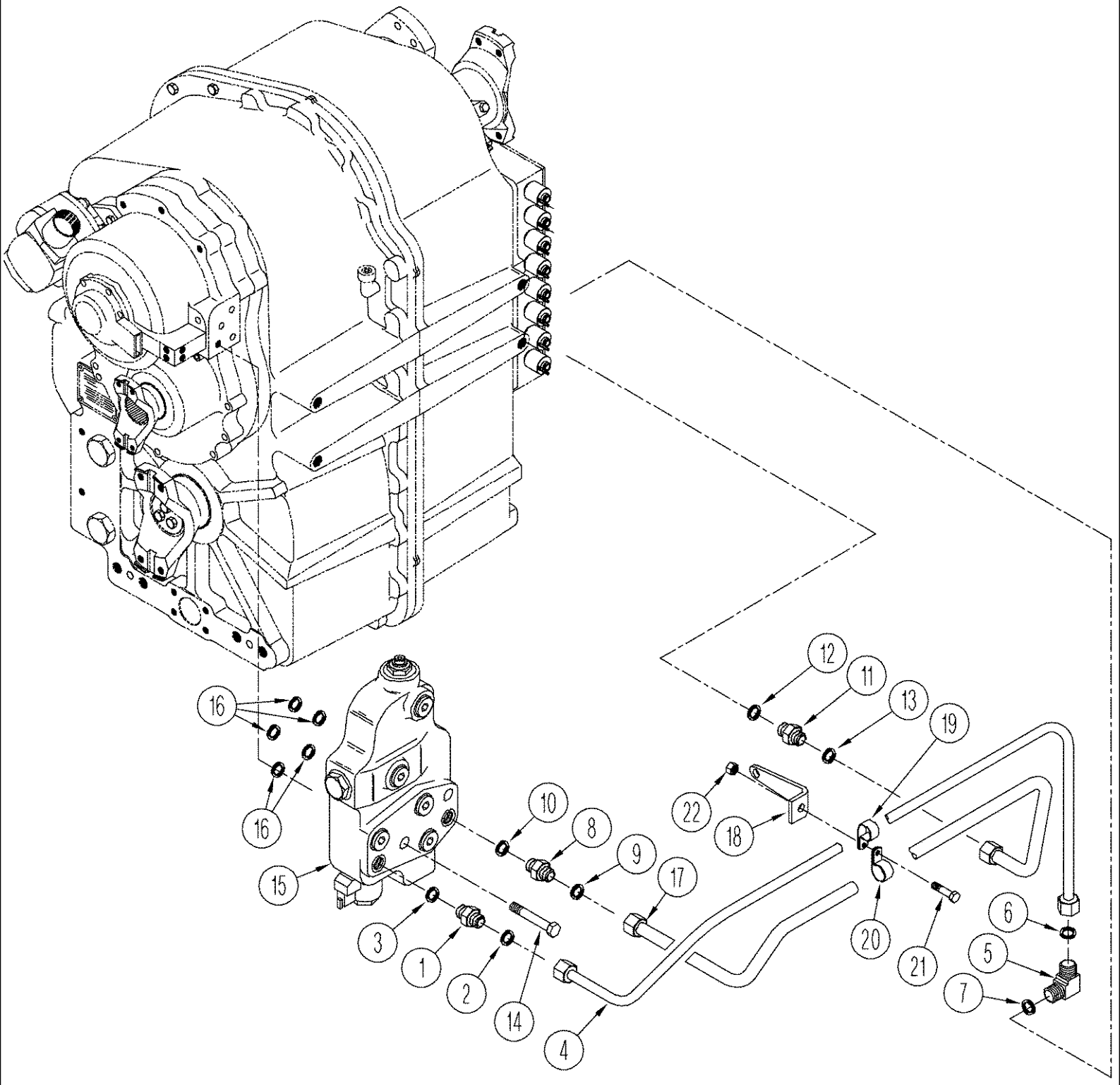

06 -15(2) POWER TAKEOFF - CLUTCH LUBRICATION, POWER SHIFT TRANSMISSION

ссылка	Номер детали	Кол-во	Описание
1	86579671	1	CONNECTOR, HYD., 11/16"-16 ORFS x M14 x 1.5 ORB, 11/16 fc sl x 14 Or, Inc. 2, 3
3	86639042	1	O-RING, Cl 6, 11.3MM ID x 2.2 Thk, 11.3 ID x 2.2 W
4	414552A1	1	TUBE ASSY.,
5	86579686	1	ELBOW, 90є, 11/16"-18 ORFS x M14 x 1.5 ORB, M14 or x 10 fcsl, Inc. 6, 7
7	86639042	1	O-RING, Cl 6, 11.3MM ID x 2.2 Thk, 11.3 ID x 2.2 W
8	86579691	1	ELBOW, 90є, 13/16"-18 ORFS x M18 x 1.5 ORB, Includes 9, 10
10	86639043	1	O-RING, 15.3 ID x 2.2 W
11	86579676	1	CONNECTOR, HYD., 13/16"-16 ORFS x M18 x 1.5 ORB, 13/16 fc sl x 18 Or, Inc. 12, 13
12	86639045	1	O-RING, Cl 6, 23.6MM ID x 2.9 Thk, 23.6 ID x 2.9 W
14	355788	2	BOLT, Hex, M10 x 70, 10.9, Cap, HH, CL 10.9, M10 x 1.5 x 70
15	413944A1	1	VALVE, P.T.O., See Figure (s) : 6-23
16	14458081	5	O-RING, -122, Cl 7, 1.112" ID x .103" Thk,
17	414550A1	1	TUBE ASSY.,
18	414553A1	1	BRACKET,
19	86637978	1	CLAMP, 3/8", Insul, 5/16" Bolt,
20	86625036	1	CLAMP, 1/2", Insul, 5/16" Bolt,
21	43233	1	BOLT, Hex, M8 x 20, 10.9, Cap, HH, CL 10.9, M8 x 1.25 x 20
22	43362	1	NUT, M8, Cl 10,
2	9993141	1	O-RING, -012, 90 Duro, .364" ID x .070" Thk,
6	9993141	1	O-RING, -012, 90 Duro, .364" ID x .070" Thk,
9	9992298	1	O-RING, -014, 90 Duro, .489" ID x .070" Thk,
13	9992298	1	O-RING, -014, 90 Duro, .489" ID x .070" Thk,

06 -16 POWER SHIFT TRANSMISSION - VALVE AND PUMP MOUNTING

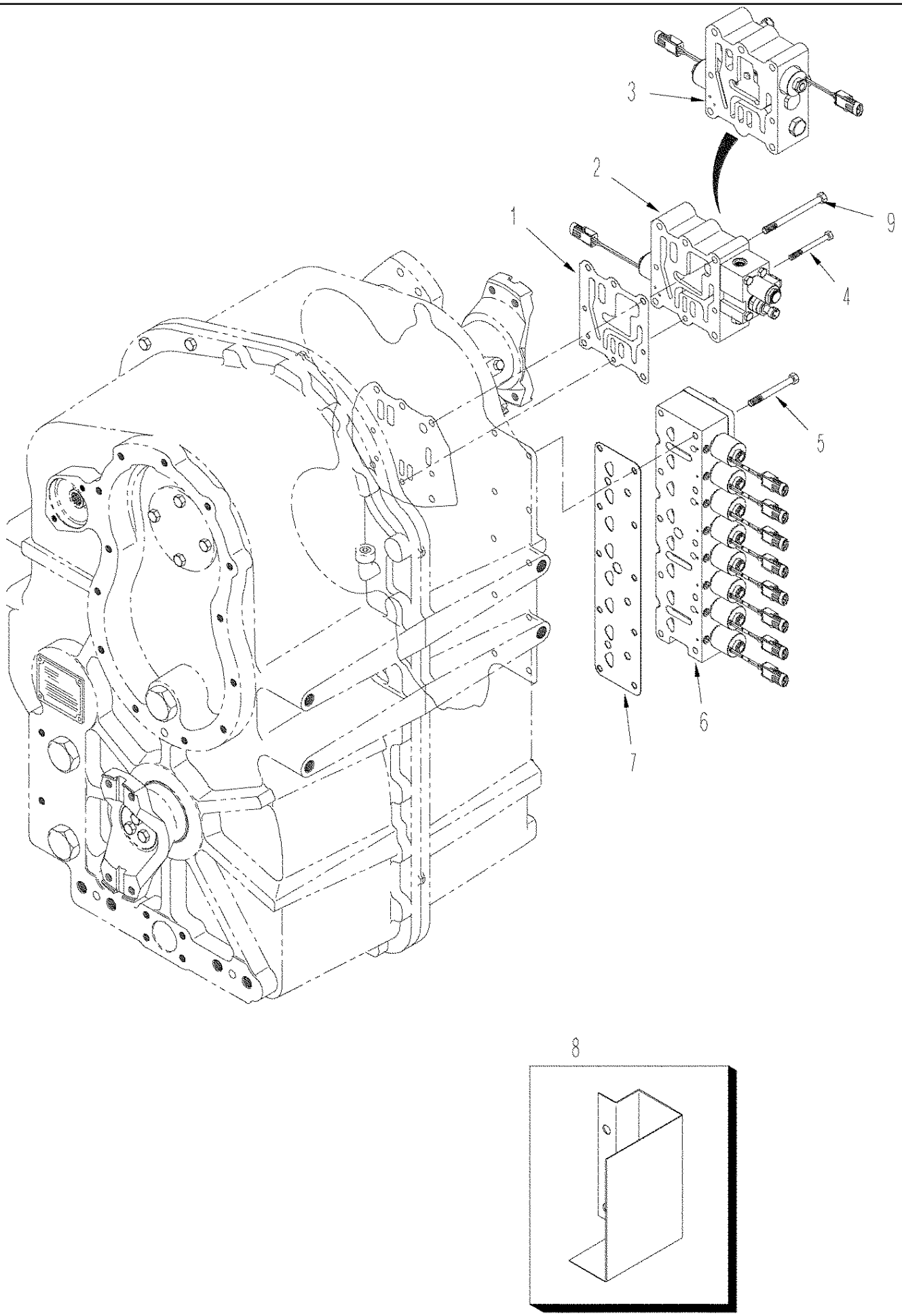

06 -16 POWER SHIFT TRANSMISSION - VALVE AND PUMP MOUNTING

ссылка	Номер детали	Кол-во	Описание
1	87431416	1	GASKET,
2	385957A1	1	VALVE, Regulator, See Figure : 06-20, BSN RVS002701
3	87431403	1	VALVE, Regulator, SeeFigure: 06-20 (01), ASN RVS002701
4	120108	3	BOLT, Hex, M8 x 80, 8.8, Full Thd,
5	86637965	10	BOLT, Hex, M10 x 90, 8.8, M10 x 90;8.8
6	370550A1	1	VALVE, Control, Range Selector, See Figure: 06-21
7	390633A1	1	GASKET, Mounting
8	408591A1	1	COVER, Solenoid
9	86637968	5	BOLT, Hex, M10 x 1.25 x 120, 8.8, M10 x 120;8.8
	398441A1	1	KIT, SEALS, Short Gasket Overhaul, Inc. 1, 7, See Figure : 06-17, 06-20, 06-21, BSN RVS002701
	87432749	1	KIT, GASKET, Short Gasket Overhaul, Inc. 1, 7, See Figure: 06-17, 06-20, 06-21, ASN RVS002701
	87432750	1	KIT, GASKET, Transmission Repair, Inc. 1, 7, See Figure(s) : 06-17, 06-20, 06-21, 06-31

06 -17 POWER SHIFT TRANSMISSION - COVERS AND YOKES

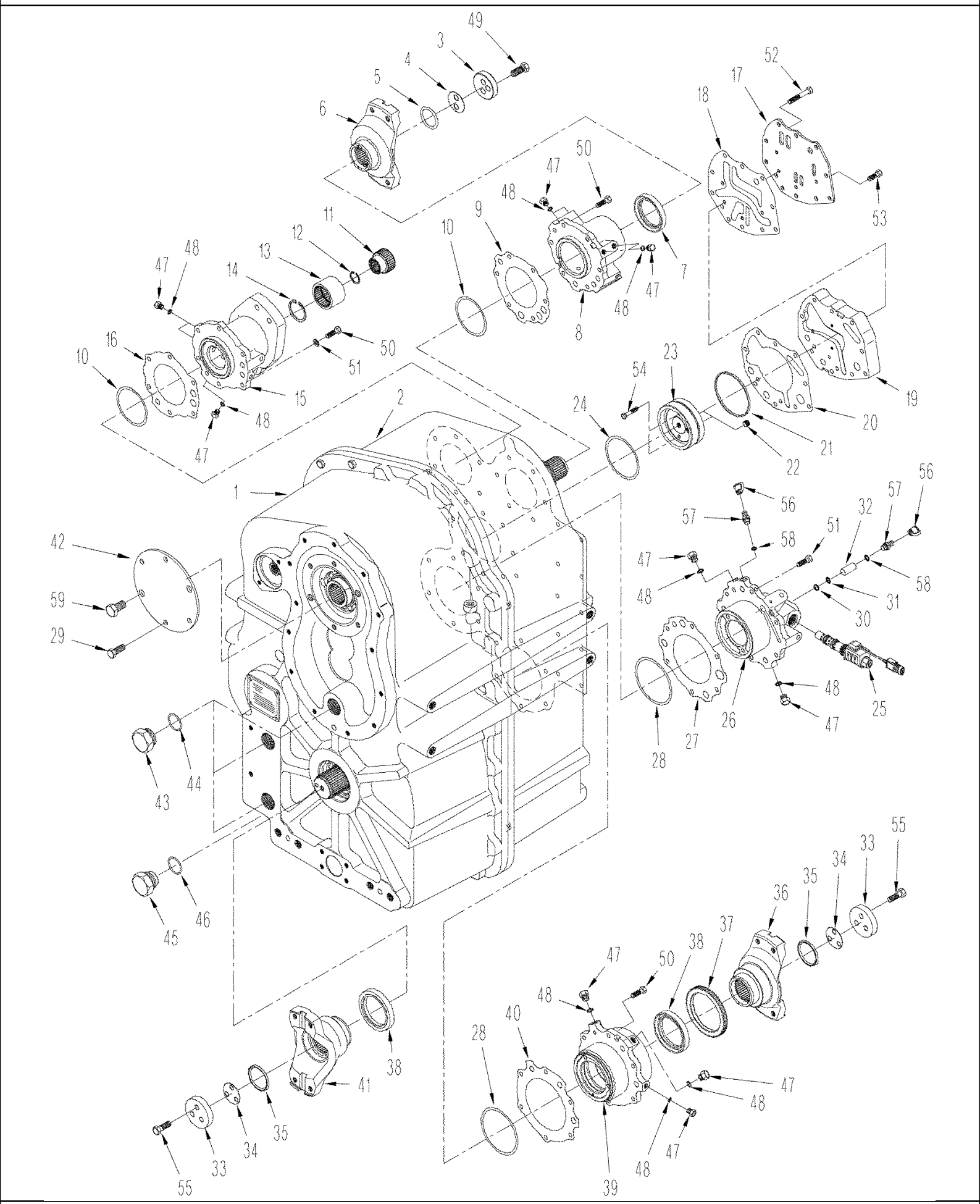

06 -17 POWER SHIFT TRANSMISSION - COVERS AND YOKES

ссылка	Номер детали	Кол-во	Описание
1	370636A1	1	HOUSING, Rear
2	375486A1	1	HOUSING, Front
3	427539A1	1	PLATE, RETAINING,
4	427560A1	AR	SHIM, 0,10 mm (0,004 in)
4	427561A1	AR	SHIM, 0,30 mm (0,012 in)
4	427562A1	AR	SHIM, 0,50 mm (0,020 in)
5	510207	1	O-RING, -327, 90 Duro, 1.725" ID x .210" Thk, 90 Duro, 1.725" ID x .210" Thk
6	373136A1	1	COUPLING FLANGE, 8C, Input, TJ450, TJ425 Manual Shift Transmission, TJ375
6	362563A1	1	COUPLING FLANGE, 8.5C, Input, TJ425 Manual and Powershift Transmission, TJ375 Heavy Duty, TJ450, TJ500
7	428159A1	1	SEAL, OIL,
8	362564A1	1	RETAINER, Input
9	362565A1	1	GASKET, Mounting
10	359242A1	AR	SHIM, 0,1 mm (0,004 in)
10	359243A1	AR	SHIM, 0,15 mm (0,006 in)
10	359244A1	AR	SHIM, 0,3 mm (0,012 in)
10	359251A1	AR	SHIM, 0,5 mm (0,020 in)
11	362566A1	1	ADAPTER,
12	301642	1	RING, SNAP, M28, Int,
13	362567A1	1	COUPLING,
14	428681A1	1	SNAP RING,
15	362568A1	1	RETAINER, Second Shaft
16	362569A1	1	GASKET, Mounting, Second Shaft
17	362570A1	1	PLATE, , BSN RVS002701
17	87431413	1	PLATE, , ASN RVS002701
18	362571A1	1	GASKET, Mounting, BSN RVS002701
18	87431414	1	GASKET, Mounting, ASN RVS002701
19	362572A1	1	PLATE, , BSN RVS002701
19	87431415	1	PLATE, Ditch, ASN RVS002701
20	362573A1	1	GASKET, Mounting, Third Shaft
21	362574A1	1	O-RING,
22	428682A1	2	PLUG,
23	362575A1	1	RETAINER, Bearing, Third Shaft
24	359252A1	AR	SHIM, 0,1 mm (0,004 in)
24	359253A1	AR	SHIM, 0,15 mm (0,006 in)
24	362576A1	AR	SHIM, 0,3 mm (0,012 in)
24	362577A1	AR	SHIM, 0,5 mm (0,020 in)
25	362578A1	AR	VALVE, Control, Pulse With Modulation, See Figure : 06-22
26	362579A1	1	RETAINER, Clutch
27	362580A1	1	GASKET, Mounting
28	427564A1	AR	SHIM, 0,10 mm (0,004 in)
28	427565A1	AR	SHIM, 0,15 mm (0,006 in)
28	427566A1	AR	SHIM, 0,30 mm (0,012 in)
28	427567A1	AR	SHIM, 0,50 mm (0,020 in)
28	427568A1	AR	SHIM, 0,70 mm (0,027 in)

ссылка	Номер детали	Кол-во	Описание
29	86637974	4	BOLT, Hex, M12 x 1.25 x 25, 8.8, Full Thd, M12 x 25
30	86625261	1	WASHER, M5 x 10 x 1, 5.5 x 10 x 1 mm
31	375450A1	1	O-RING,
32	87408706	1	FILTER, Pulse with Modulation
33	427515A1	2	PLATE, RETAINING,
34	427517A1	AR	SHIM, 0,10 mm (0,004 in)
34	427519A1	AR	SHIM, 0,30 mm (0,012 in)
35	428165A1	2	O-RING,
36	373137A1	1	COUPLING FLANGE, 8C, Output, TJ450, TJ425 Manual Shift Transmission, TJ375
36	362598A1	1	COUPLING FLANGE, 8,5C, Output, TJ425 Manual Shift Transmission, TJ375 Heavy Duty, TJ450, TJ500
37	362601A1	1	RING,
38	427514A1	2	SEAL, OIL,
39	362602A1	1	RETAINER, Output
40	362603A1	1	GASKET, Mounting
41	373138A1	1	COUPLING FLANGE, 8C, Output, TJ425 Manual Shift Transmission, TJ375
41	362604A1	1	COUPLING FLANGE, 8,5C, Output, TJ425 Manual Shift Transmission, TJ375 Heavy Duty, TJ450, TJ500
42	427558A1	1	COVER, Power Takeoff
43	303493A1	2	PLUG, Hex Soc, M42 x 2, ORB, Drain, M42 orb x 2, Inc. 44
44	86639047	2	O-RING, Cl 6, 38.6MM ID x 2.9 Thk, 1-1/2 ID x 7/64
45	375456A1	1	PLUG, DRAIN, M42 orb x 2, Inc. 46
46	86639047	1	O-RING, Cl 6, 38.6MM ID x 2.9 Thk, 1-1/2 ID x 7/64
47	220064A1	9	PLUG, M14 x 1.5, ORB, M14 - 1,5, Inc. 50
48	86639042	9	O-RING, Cl 6, 11.3MM ID x 2.2 Thk, 11,3 ID x 2,2 W
49	428181A1	2	BOLT, M14 x 35, CL8.8
50	86637966	24	BOLT, Hex, M10 x 1.25 x 35, 8.8, Full Thd, M10 x 35
51	140028	6	WASHER, LOCK, M10,
52	412159	2	BOLT, Hex, M10 x 1.25 x 25, 8.8, Full Thd, M10 x 25
53	86642434	4	BOLT, M10 x 60
54	120106	2	BOLT, Hex, M8 x 40, 8.8, Full Thd,
55	86642438	6	BOLT, Hex, M12 x 1.25 x 35, 10.9, Full Thd,
	178889A1		FITTING, Diagnostic, Inc. 56, 57
56	86502604	1	DUST CAP,
57	NSS	1	NOT SERVICED SEPARATELY, Fitting, Diagnostic, Inc. 62
58	86639042	1	O-RING, Cl 6, 11.3MM ID x 2.2 Thk, 11.3 ID x 2.2 W
59	427559A1	2	SCREW,
	398441A1		KIT, SEALS, Overhaul, Short Gasket, Inc. 9, 16, 18, 20, See Figure (s) : 06-16 - 06-21, BSN RVS002701
	87432749		KIT, GASKET, Overhaul, Short Gasket, Inc. 9, 16, 18, 20, See Figure (s) : 06-16 - 06-21, ASN RVS002701
	87432750		KIT, GASKET, Transmission Repair, Inc. 5, 7, 9, 16, 18, 20, 21, See Figure (s) : 06-16, 06-20, 06-21, 06-31

06 -18 POWER SHIFT TRANSMISSION - REAR HOUSING

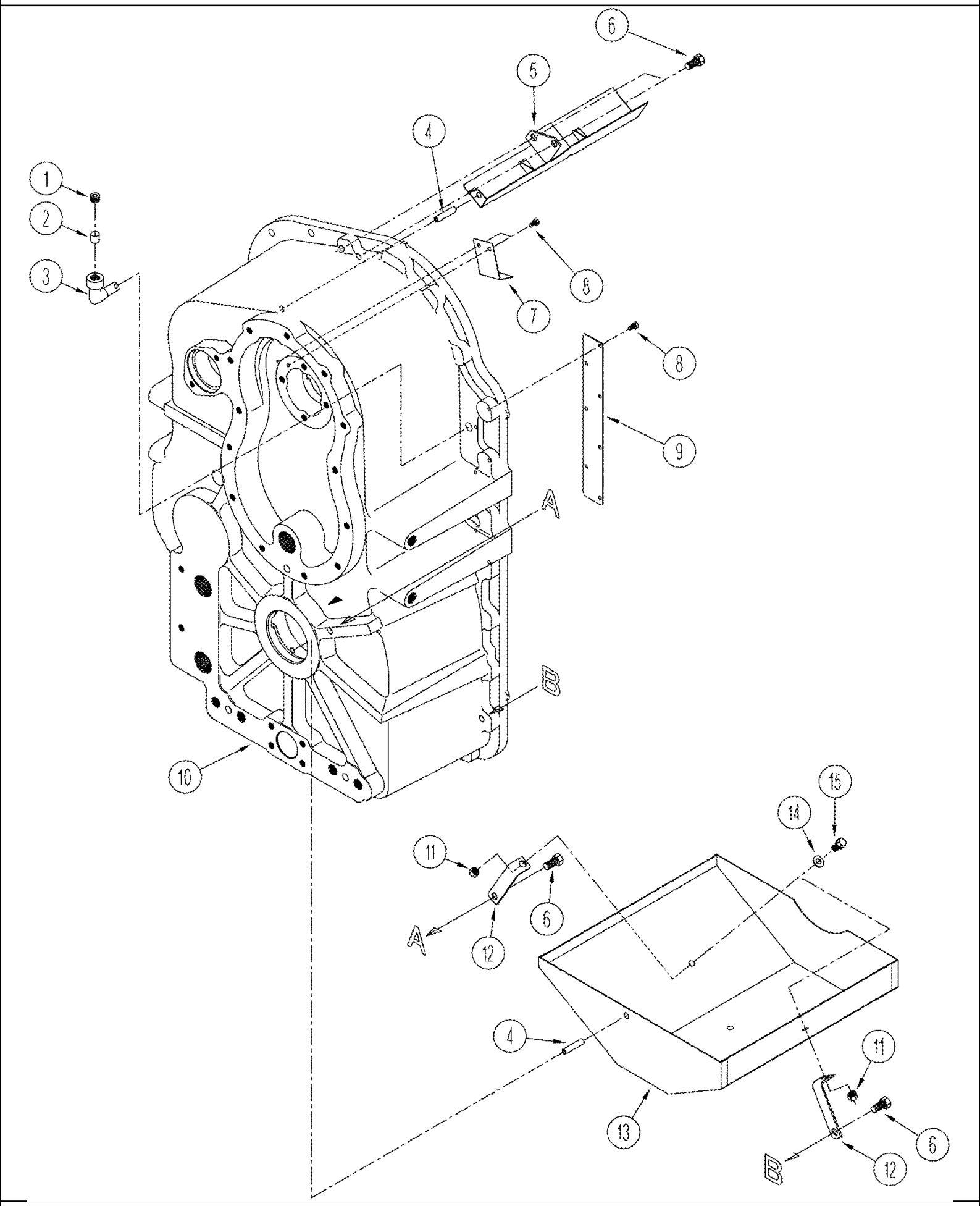

06 -18 POWER SHIFT TRANSMISSION - REAR HOUSING

ссылка	Номер детали	Кол-во	Описание
1	428156A1	1	PLUG,
2	427524A1	1	BREATHER,
3	370632A1	1	TUBE, Breather
4	86642457	2	PIN, Roll
5	370633A1	1	TROUGH, Oil
6	86637974	4	BOLT, Hex, M12 x 1.25 x 25, 8.8, Full Thd, M12 x 25
7	370634A1	1	TROUGH, Second
8	86977726	9	BOLT, Hex, M6 x 12, 8.8,
9	370635A2	1	BAFFLE, Air
10	370636A1	1	HOUSING, Rear
11	222008	2	NUT, LOCK, M10
12	370637A1	2	BRACKET,
13	392082A1	1	BAFFLE, Transmission Oil
14	86624176	2	WASHER, M10 x 20 x 2, M10
15	86637962	2	BOLT, Hex, M10 x 1.25 x 20, 8.8, Full Thd, M10 x 20

06 -19 POWER SHIFT TRANSMISSION - HOUSING AND CLUTCHES

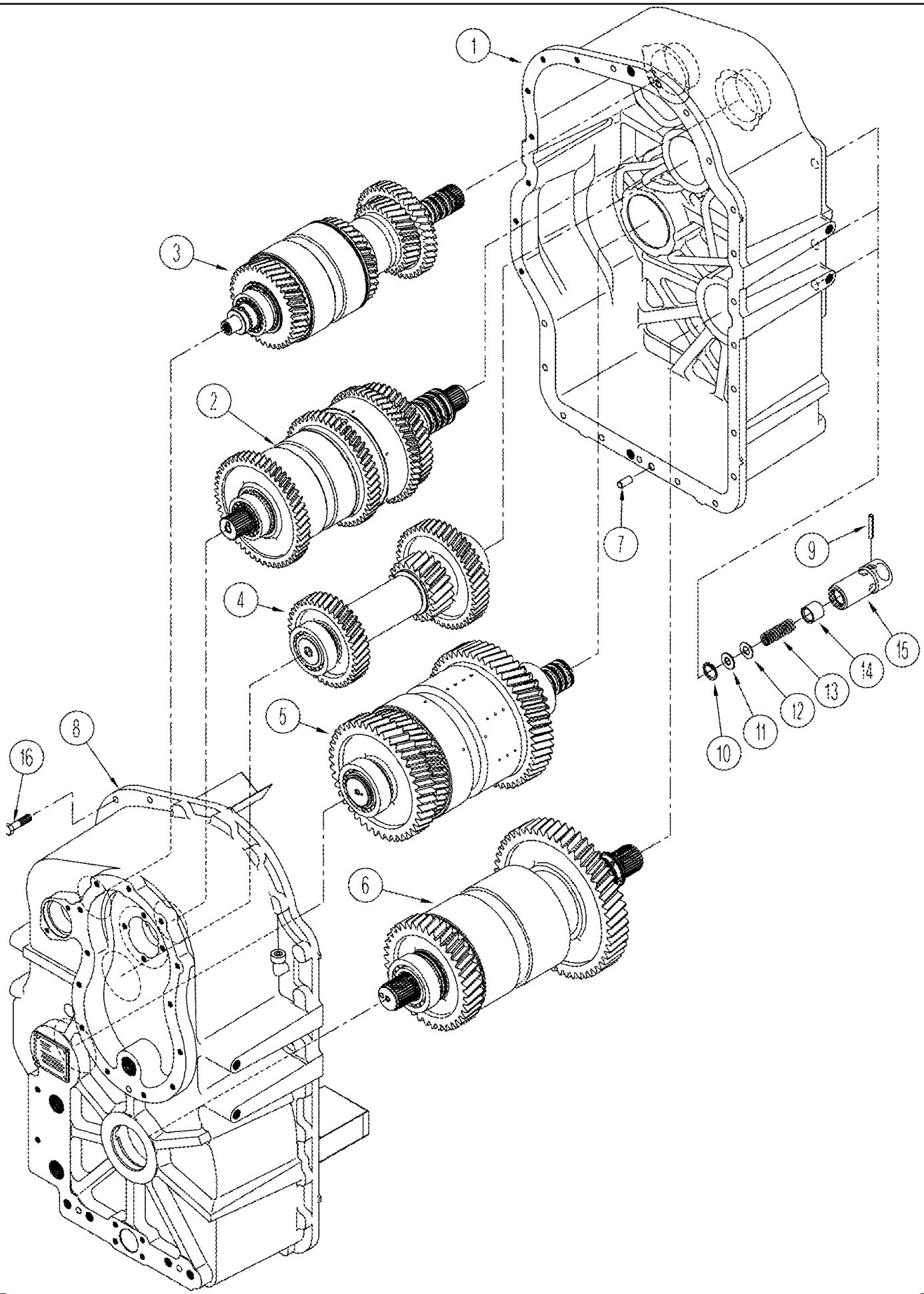

06 -19 POWER SHIFT TRANSMISSION - HOUSING AND CLUTCHES

ссылка	Номер детали	Кол-во	Описание
1	375486A1	1	HOUSING, Front
2	87431389	1	SHAFT ASSY., Input, 7, See Figure(s) : 06-24, 06-25
3	87431395	1	SHAFT ASSY., Second, See Figure : 06-26
4	NSS	1	NOT SERVICED SEPARATELY, Shaft, Third, See Figure : 06-27
5	87431399	1	SHAFT ASSY., Fourth, See Figure(s) : 06-28, 06-29
6	87431402	1	SHAFT ASSY., Fifth, See Figure(s) : 06-30, 06-31
7	427530A1	2	DOWEL,
8	370636A1	1	HOUSING, Rear
9	86642455	4	PIN, Roll
10	370025	4	RING, SNAP, M12, Int, Retaining
11	86625261	4	WASHER, M5 x 10 x 1, 5.5 x 10 x 1 mm
12	370542A1	4	SHIM,
13	370543A1	4	SPRING,
14	370544A1	4	SPOOL,
15	370545A1	4	CAP,
16	86642435	25	BOLT, Hex, M12 x 1.25 x 45, 8.8, Full Thd, M12 x 45

06 -20 POWER SHIFT TRANSMISSION - REGULATOR VALVE ASSY, BSN RVS002701

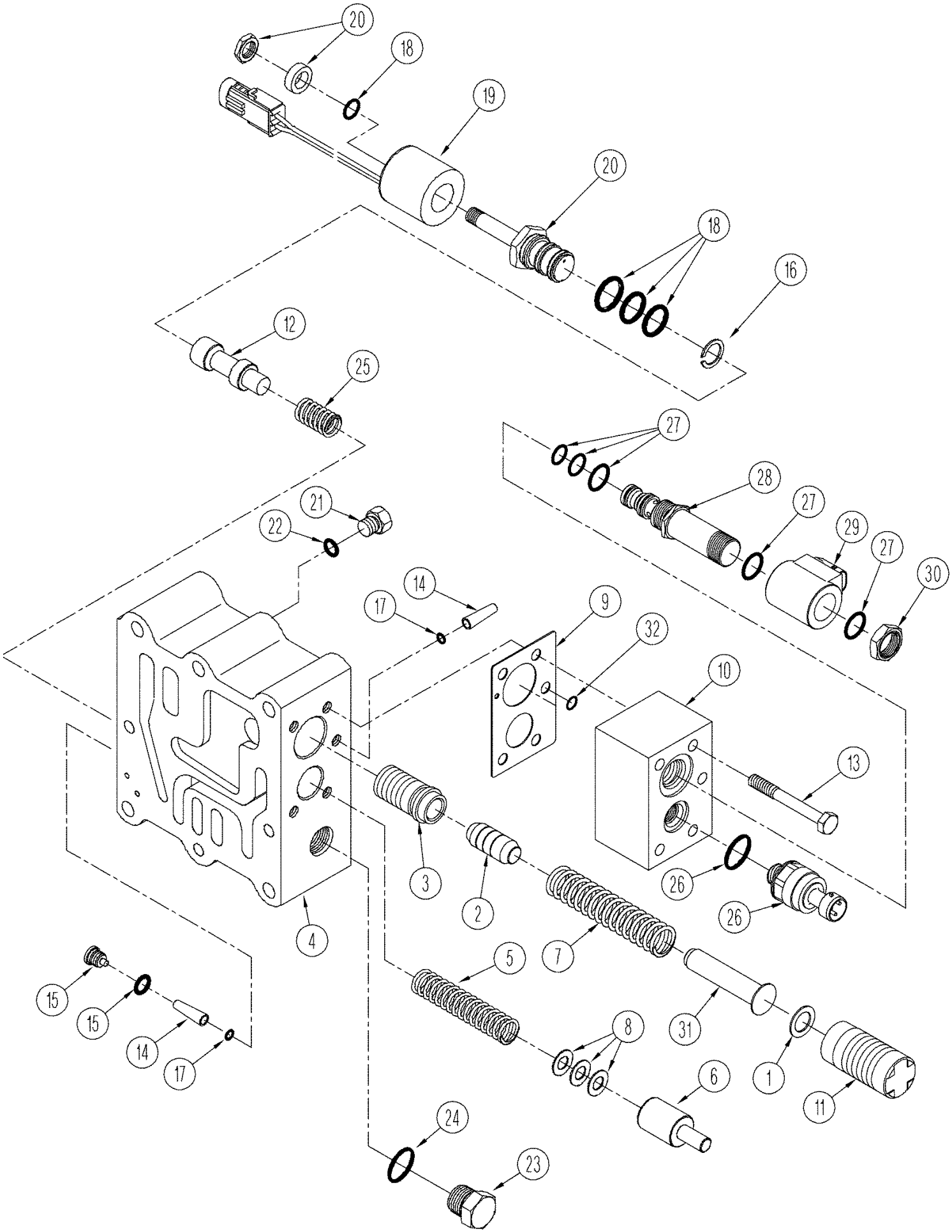

06 -20 POWER SHIFT TRANSMISSION - REGULATOR VALVE ASSY, BSN RVS002701

ссылка	Номер детали	Кол-во	Описание
	385957A1	1	VALVE, Regulator, Inc. 1 - 32
1	395752A1	AR	SHIM, 0,039 in
2	385780A1	1	ROD, Pressure
3	385781A1	1	VALVE, Regulator
4	370590A2	1	BODY, VALVE,
5	398443A1	1	SPRING,
6	398444A1	1	VALVE, Lube
7	370591A1	1	SPRING,
8	398445A1	AR	SHIM, 0,031 in
9	370593A1	1	GASKET, Mounting
10	385778A1	1	BODY, VALVE, Solenoid
11	391884A1	1	PISTON,
12	370597A1	1	SPOOL,
13	280294	5	BOLT, Hex, 5/16"-18 x 2 1/4", G8, Cap, HH, G8, 5/16"-18 x 2-1/4"
14	87408714	2	FILTER,
15	428678A1	1	PLUG,
16	428679A1	1	SNAP RING,
17	428676A1	2	O-RING, Filter
	371737A1	1	VALVE, SOLENOID, Solenoid, Three Way, Inc. 18 - 20
	371738A1	1	KIT, O-Ring, Inc. 18
18	NSS	1	NOT SERVICED SEPARATELY, O-Ring, Lower
18	NSS	1	NOT SERVICED SEPARATELY, O-Ring, Middle
18	NSS	1	NOT SERVICED SEPARATELY, O-Ring, Upper
18	NSS	1	NOT SERVICED SEPARATELY, O-Ring, Plug Nut
19	371739A1	1	COIL,
20	370600A1	1	VALVE, SOLENOID,
21	220064A1	2	PLUG, M14 x 1.5, ORB, M14 - 1,5, Inc. 22
22	86639042	2	O-RING, Cl 6, 11.3MM ID x 2.2 Thk, 11,3 ID x 2,2
23	86589753	1	PLUG, M18 x 15, Inc. 24
24	86639043	1	O-RING, 15,3 ID x 2,2
25	370596A1	1	SPRING,
26	404450A1	1	SENSOR, Pressure
	239552A2	1	VALVE, SOLENOID, Pulse With Modulation, Inc. 27 - 30
	308245A1	1	KIT, SEALS, O-Ring, Inc. 27
27	NSS	1	NOT SERVICED SEPARATELY, O-Ring
28	304831A1	1	SPOOL, Pilot
29	304834A1	1	SOLENOID,
30	304836A1	1	NUT,
31	413236A1	1	PIN, Centering
32	413238A1	1	RETAINER, Filter
	87432750		KIT, GASKET, Transmission Repair, Inc. 9, 18, See Figure (s) : 06-16, 06-17, 06-20 - 06-31
	398441A1		KIT, SEALS, Overhaul, Short Gasket, Inc. 9, See Figure (s) : 06-16, 06-17 - 06-21, BSN RVS002701

06 -20(01) POWER SHIFT TRANSMISSION - REGULATOR VALVE ASSY, ASN RVS002701

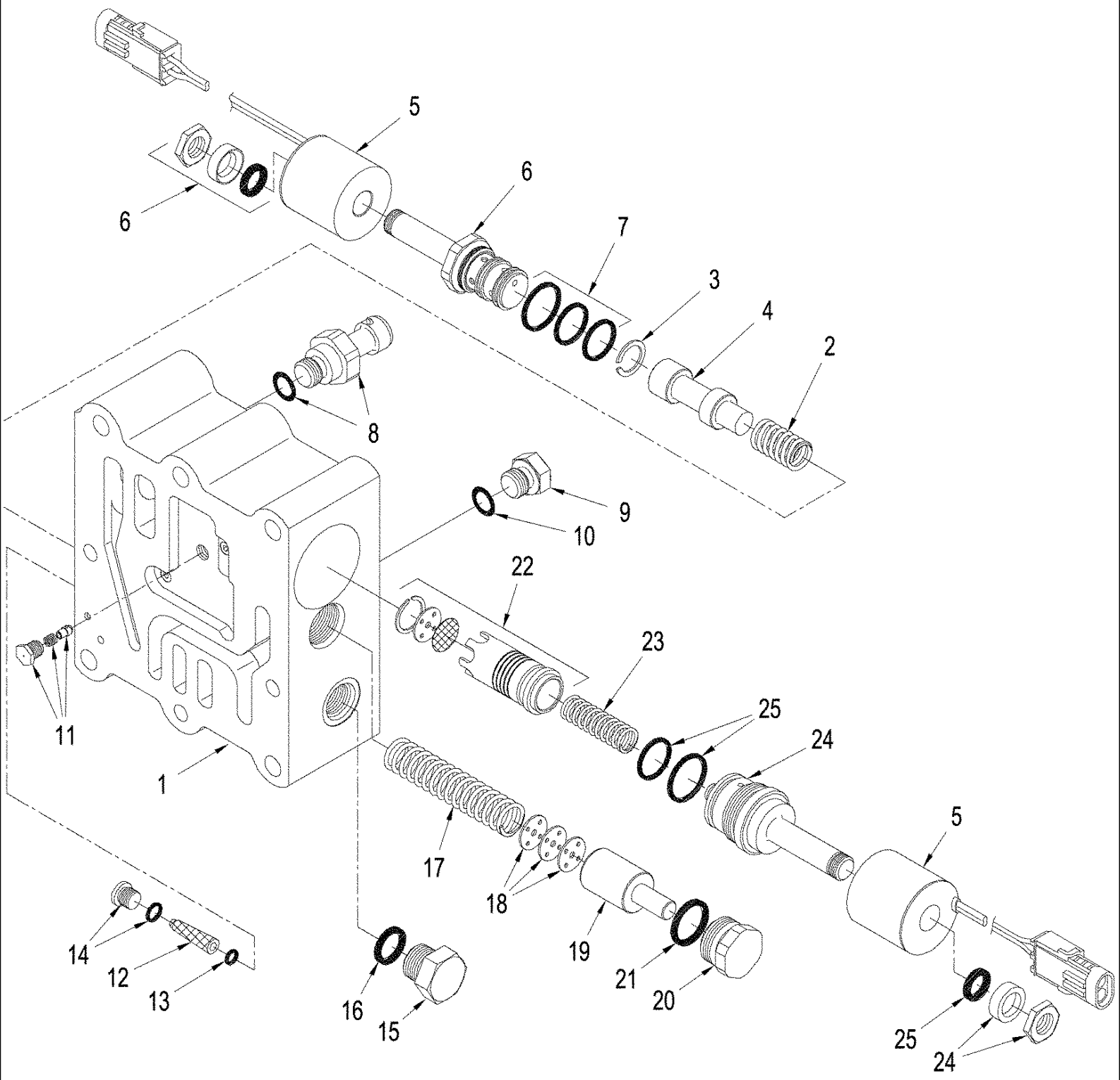

06 -20(01) POWER SHIFT TRANSMISSION - REGULATOR VALVE ASSY, ASN RVS002701

ссылка	Номер детали	Кол-во	Описание
	87431403	1	VALVE, Regulator, Inc. 1 - 7 & 9 - 25
1	NSS	1	NOT SERVICED SEPARATELY, Body, Valve
2	370596A1	1	SPRING,
3	428679A1	1	SNAP RING,
4	370597A1	1	SPOOL,
	371737A1	1	VALVE, SOLENOID, 3-way, Inc. 5 - 7
5	371739A1	2	COIL,
6	NSS	1	NOT SERVICED SEPARATELY, Pilot Assy.
7	371738A1	1	KIT, O-Ring
8	404450A1	1	SENSOR, Pressure
9	220064A1	1	PLUG, M14 x 1.5, ORB, M14, Inc. 10
10	86639042	1	O-RING, Cl 6, 11.3MM ID x 2.2 Thk,
11	87431412	1	VALVE, Relief
12	87408714	1	FILTER, Conical
13	428676A1	1	O-RING,
14	428678A1	1	PLUG, Inc. O-Ring
15	220066A1	1	PLUG, M18 x 1.5, ORB, M18, Inc. 16
16	86639043	1	O-RING,
17	398443A1	1	SPRING,
18	398445A1	AR	SHIM,
19	398444A1	1	VALVE,
20	87431407	1	PLUG, Inc. 21
21	87431408	1	O-RING,
22	87431405	1	SPOOL, Main Pressure
23	87431406	1	SPRING, VALVE,
	87431409	1	VALVE, PMW Solenoid, Inc. 5, 24, 25
24	87431410	1	VALVE, Pilot
25	87431411	1	KIT, SEALS, O-Ring

06 -21 POWER SHIFT TRANSMISSION - RANGE SELECTOR VALVE

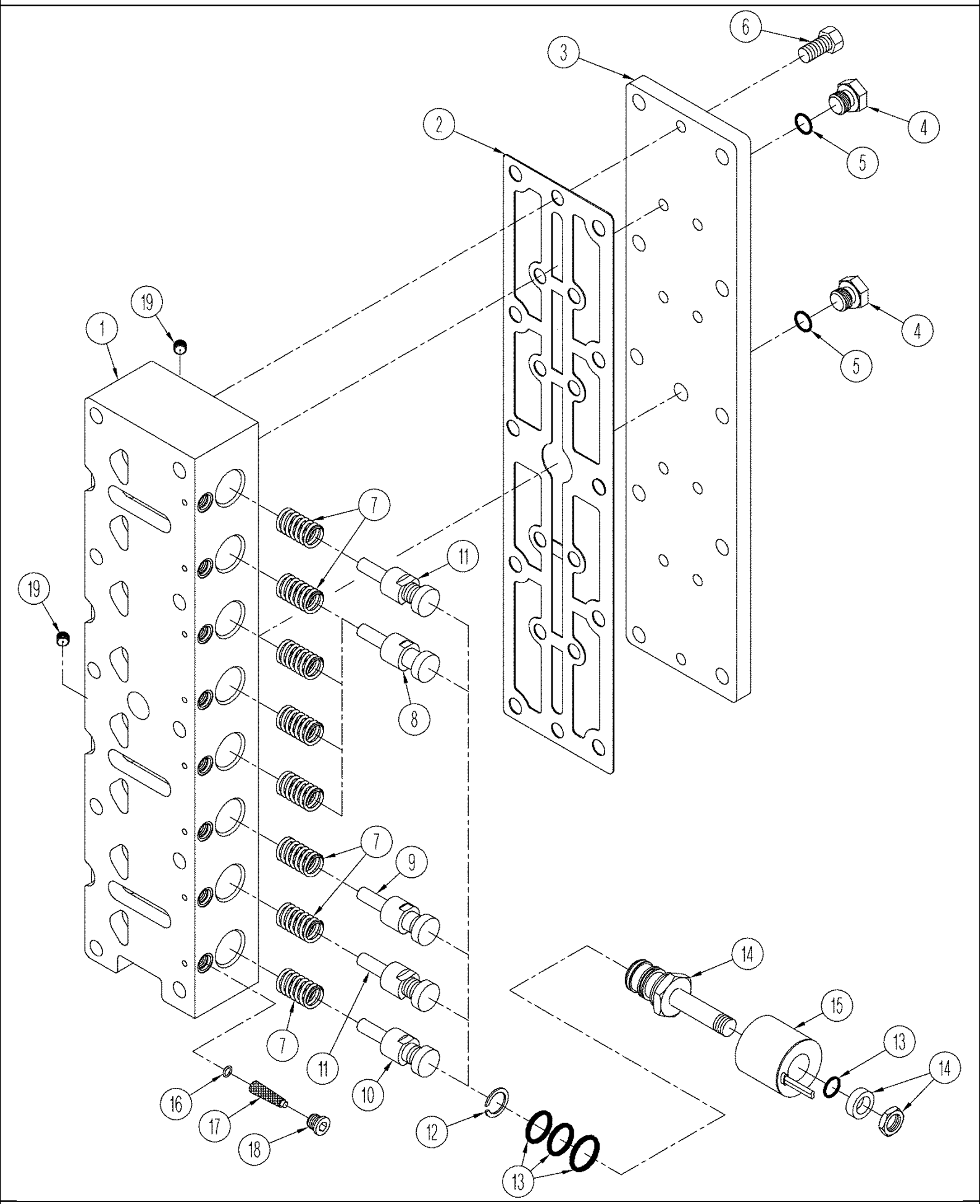

06 -21 POWER SHIFT TRANSMISSION - RANGE SELECTOR VALVE

ссылка	Номер детали	Кол-во	Описание
	370550A1	1	VALVE, Control, Range Selector, Inc. 1 - 17
1	370601A1	1	BODY,
2	428680A1	1	GASKET, Cover
3	375459A1	1	COVER,
4	220064A1	2	PLUG, M14 x 1.5, ORB, M14 - 1,5, Inc. 5
5	86639042	2	O-RING, Cl 6, 11.3MM ID x 2.2 Thk, 11,3 ID x 2,2
6	86622980	10	BOLT, Hex, 5/16"-18 x 3/4", G8, Full Thd, 5/16 x 3/4; 8
7	370604A1	8	SPRING,
8	370606A1	8	SPOOL, One Groove
9	395756A1	1	SPOOL, Two Groove
10	395757A1	1	SPOOL, Three Groove
11	395758A1	2	SPOOL, Four Groove
	371737A1	8	VALVE, SOLENOID, Three Way, Inc. 12 - 14
12	428679A1	8	SNAP RING,
	371738A1	8	KIT, O-Ring, Inc. 13
13	NSS	1	NOT SERVICED SEPARATELY, O-Ring, Lower
13	NSS	1	NOT SERVICED SEPARATELY, O-Ring, Middle
13	NSS	1	NOT SERVICED SEPARATELY, O-Ring, Upper
13	NSS	1	NOT SERVICED SEPARATELY, O-Ring, Plug Nut
14	370600A1	8	VALVE, SOLENOID, Valve, Solenoid
15	371739A1	8	COIL,
16	428676A1	8	O-RING, Filter
17	87408714	8	FILTER, Conical
18	428678A1	8	PLUG, With O-Ring
19	398299A1	2	ORIFICE,
	87432750	1	KIT, GASKET, Transmission Repair, Inc. 2, 13, 16, See Figure(s) : 06-16 - 06-17 - 06-20 - 06-31
	398441A1	1	KIT, SEALS, Overhaul, Short Gasket, Inc. 2, See Figure(s) : 06-16 - 06-17 - 06-20, BSN RVS002701
	87432749	1	KIT, GASKET, Overhaul, Short Gasket, Inc. 2, See Figure(s) : 06-16 - 06-17 - 06-20, ASN RVS002701

06 -22 VALVE ASSY PULSE WITH MODULATION

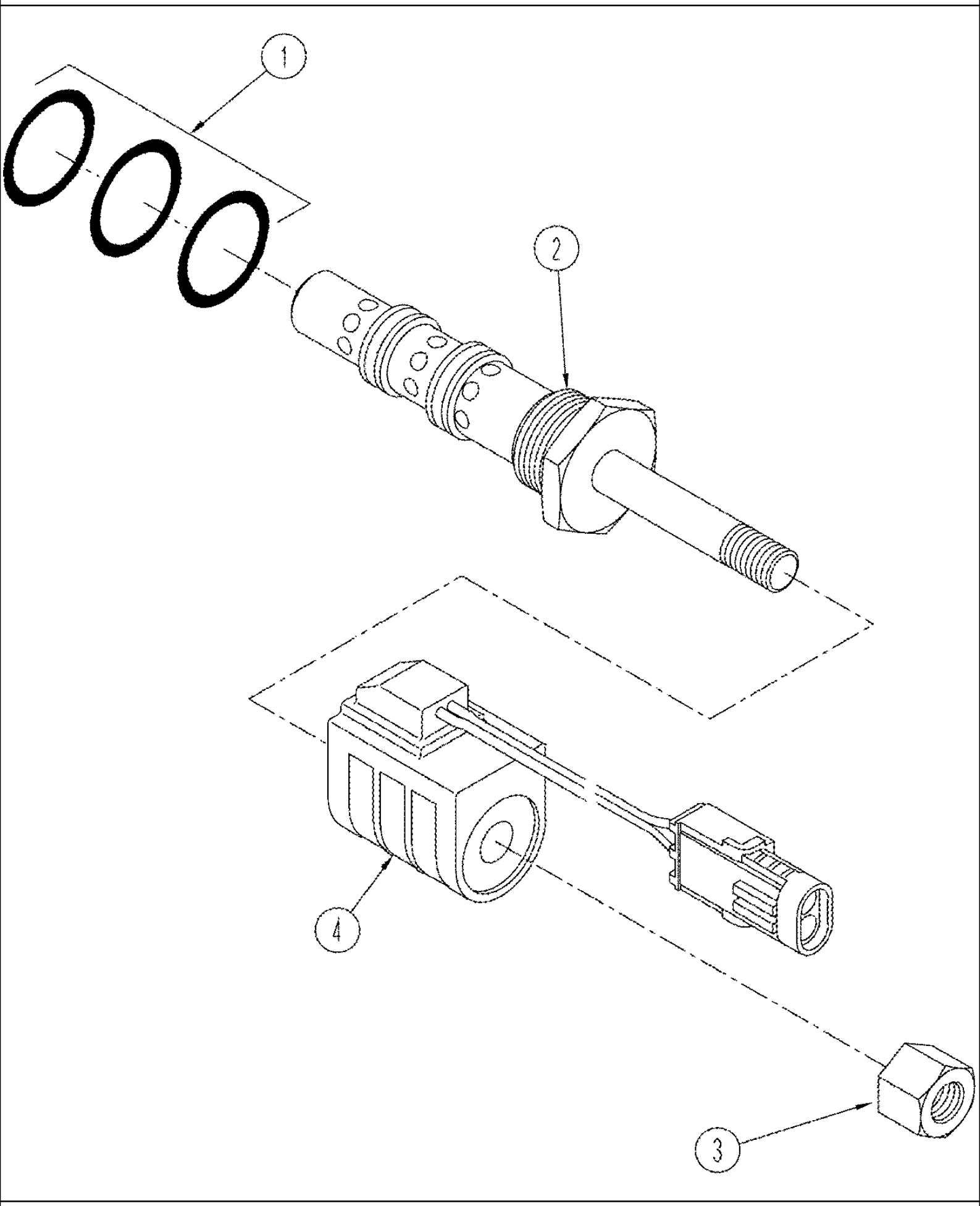

06 -22 VALVE ASSY PULSE WITH MODULATION

ссылка	Номер детали	Кол-во	Описание
	362578A1	1	VALVE, Control, Pulse With Modulation, Inc. 1 - 4
1	370608A1	1	KIT,
	370611A1	1	VALVE, SOLENOID, Inc. 2, 3
2	NSS	1	NOT SERVICED SEPARATELY, Valve, Solenoid
3	NSS	1	NOT SERVICED SEPARATELY, Nut
4	370610A1	1	COIL,

06 -23 VALVE ASSY POWER TAKE OFF

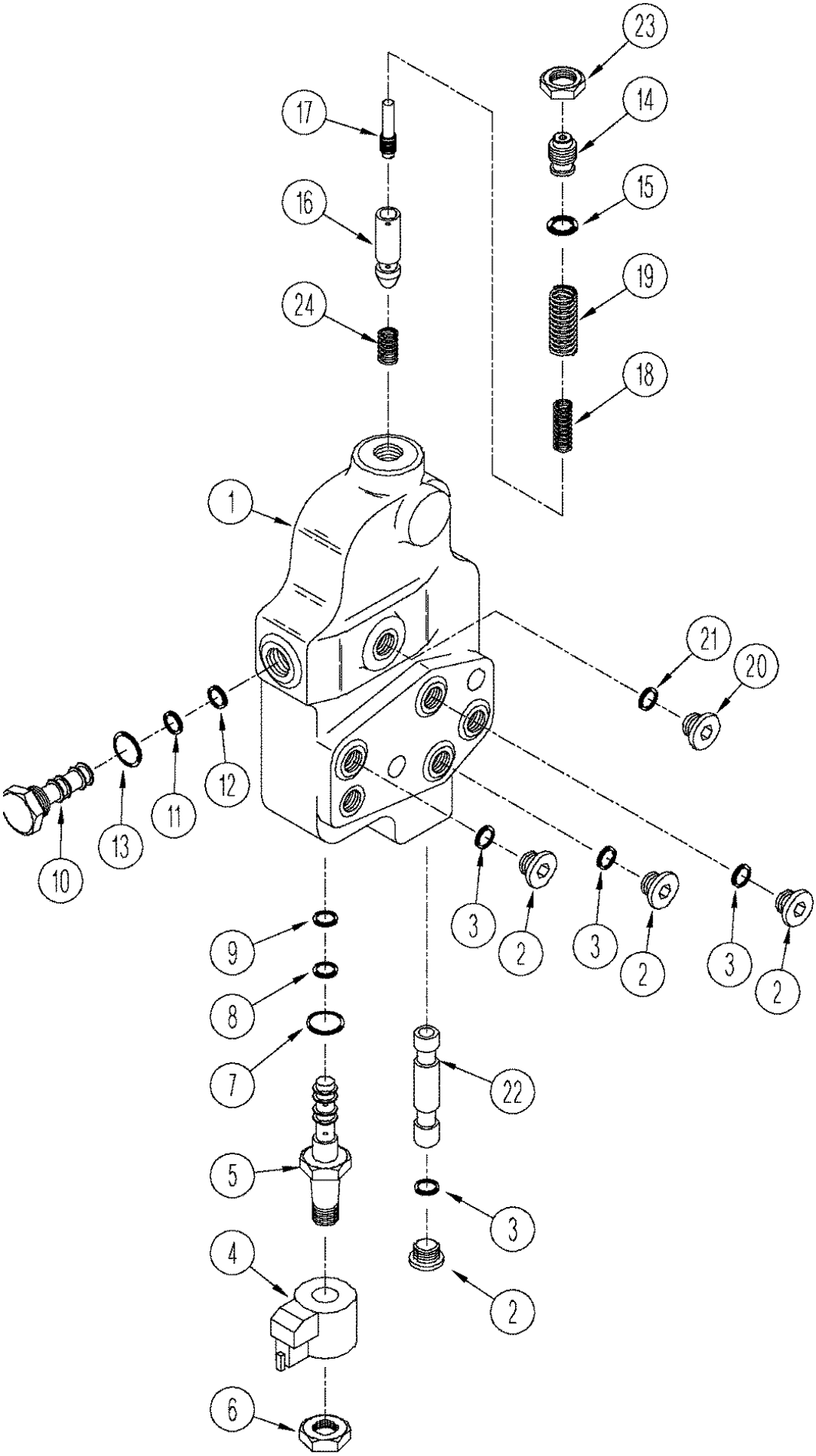

TJ375 TRACTOR - Power Train

06 -23 VALVE ASSY POWER TAKE OFF

ссылка	Номер детали	Кол-во	Описание
	413944A1	1	VALVE, Control, Power Takeoff, Inc. 1 - 24
1	NSS	1	NOT SERVICED SEPARATELY, Body
2	221578A1	4	PLUG, Hex Soc, M18 x 1.5, ORB, Includes 3
3	86639043	4	O-RING, 15.3 ID x 2.2
	318822A1	1	VALVE, SOLENOID, Solenoid, Inc. 4 - 9
4	NSS	1	NOT SERVICED SEPARATELY, Coil
5	NSS	1	NOT SERVICED SEPARATELY, Valve, Solenoid
6	NSS	1	NOT SERVICED SEPARATELY, Nut
7	128825	1	O-RING, 8-1, 90 Duro, .644" ID x .087" Thk,
8	130282	1	O-RING, -014, 70 Duro, .489" ID x .070" Thk,
9	129270	1	O-RING, 5-1, 90 Duro, .414" ID x .072" Thk,
	315514A1	1	PLUG, Inc. 10 - 13
10	NSS	1	NOT SERVICED SEPARATELY, Plug
12	272217	1	O-RING, -013, 90 Duro, .426" ID x .070" Thk,
13	128825	1	O-RING, 8-1, 90 Duro, .644" ID x .087" Thk,
	345794A1	1	PLUG, Inc. 14, 15
14	NSS	1	NOT SERVICED SEPARATELY, Plug
15	86639045	1	O-RING, Cl 6, 23.6MM ID x 2.9 Thk, 23.6 ID x 2.9
16	319664A1	1	SLEEVE,
17	319665A1	1	PISTON,
18	319661A1	1	SPRING, Inner
19	319660A1	1	SPRING, Outer
20	221576A1	1	PLUG, Hex Soc, M14 x 1.5, ORB, Includes 21
21	86639042	1	O-RING, Cl 6, 11.3MM ID x 2.2 Thk, 11.3 ID x 2.2
22	320036A1	1	SPOOL,
23	322118A1	1	NUT, Special
24	319659A1	1	SPRING,
11	9992298	1	O-RING, -014, 90 Duro, .489" ID x .070" Thk,

06 -24(1) POWER SHIFT TRANSMISSION - INPUT SHAFT ASSY

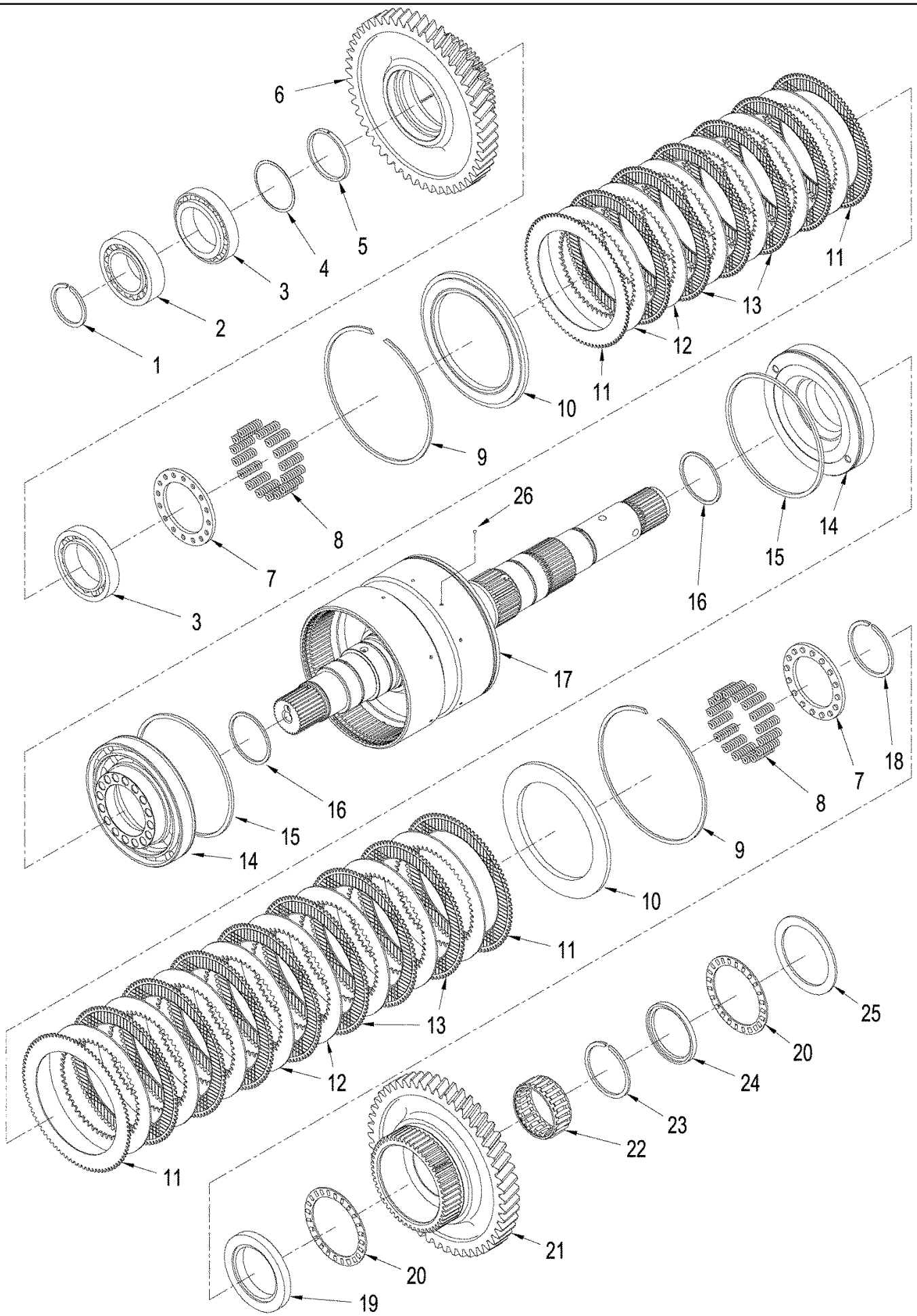

06 -24(1) POWER SHIFT TRANSMISSION - INPUT SHAFT ASSY

ссылка	Номер детали	Кол-во	Описание
	87431389	1	SHAFT ASSY., Input, 7, Inc. 1 - 26, Also See Figure : 06-24 (2)
1	352378A1	AR	SNAP RING, 2,5 mm
1	352394A1	AR	SNAP RING, 2,6 mm
1	352397A1	AR	SNAP RING, 2,7 mm
1	352400A1	AR	SNAP RING, 2,8 mm
1	352815A1	AR	SNAP RING, 2,9 mm
1	352816A1	AR	SNAP RING, 3,0 mm
2	428183A1	1	BEARING, Cone
3	E135785	4	BEARING, Roller
4	352818A1	AR	SHIM, 0,15 mm
4	352819A1	AR	SHIM, 0,18 mm
4	352820A1	AR	SHIM, 0,20 mm
4	352821A1	AR	SHIM, 0,25 mm
4	352822A1	AR	SHIM, 0,30 mm
4	352823A1	AR	SHIM, 0,50 mm
5	352825A1	1	SPACER,
6	352826A1	1	GEAR, 1R
7	352827A1	2	PLATE, Springs
8	352828A1	32	SPRING,
9	352829A1	2	SNAP RING,
10	352830A1	2	PLATE, End, BSN RVS002701
10	87431390	2	PLATE, End, ASN RVS002701
11	352831A1	4	DISC, CLUTCH, Face, 7
12	S2080S00F	AR	DISC, CLUTCH, 2,4 mm, If Used
12	S2090S00F	AR	DISC, CLUTCH, 2,1 mm, If Used.
13	352832A1	11	DISC, CLUTCH, Face, 7
14	352833A1	2	PISTON, 7
15	87431391	2	RING, Seal
16	S2610S00F	2	RING, Piston
17	353058A1	1	SHAFT, Drum
18	428163A1	1	SNAP RING, Retaining
19	353059A1	1	WASHER, THRUST, Thrust
20	353060A1	2	BEARING, THRUST, Needle
21	87431392	1	GEAR, 1M, ASN RVS002701
22	358865A1	1	BEARING, Cone
23	358866A1	1	SNAP RING,
24	358867A1	1	SPACER,
25	358908A1	1	WASHER, THRUST, Thrust
26	S14701960	1	BALL,
	87432750	1	KIT, GASKET, Transmission Repair, Inc. 16, See Figure(s) : 06-16 , 06-17, 06-20 - 06-31

06 -24(2) POWER SHIFT TRANSMISSION - INPUT SHAFT ASSY

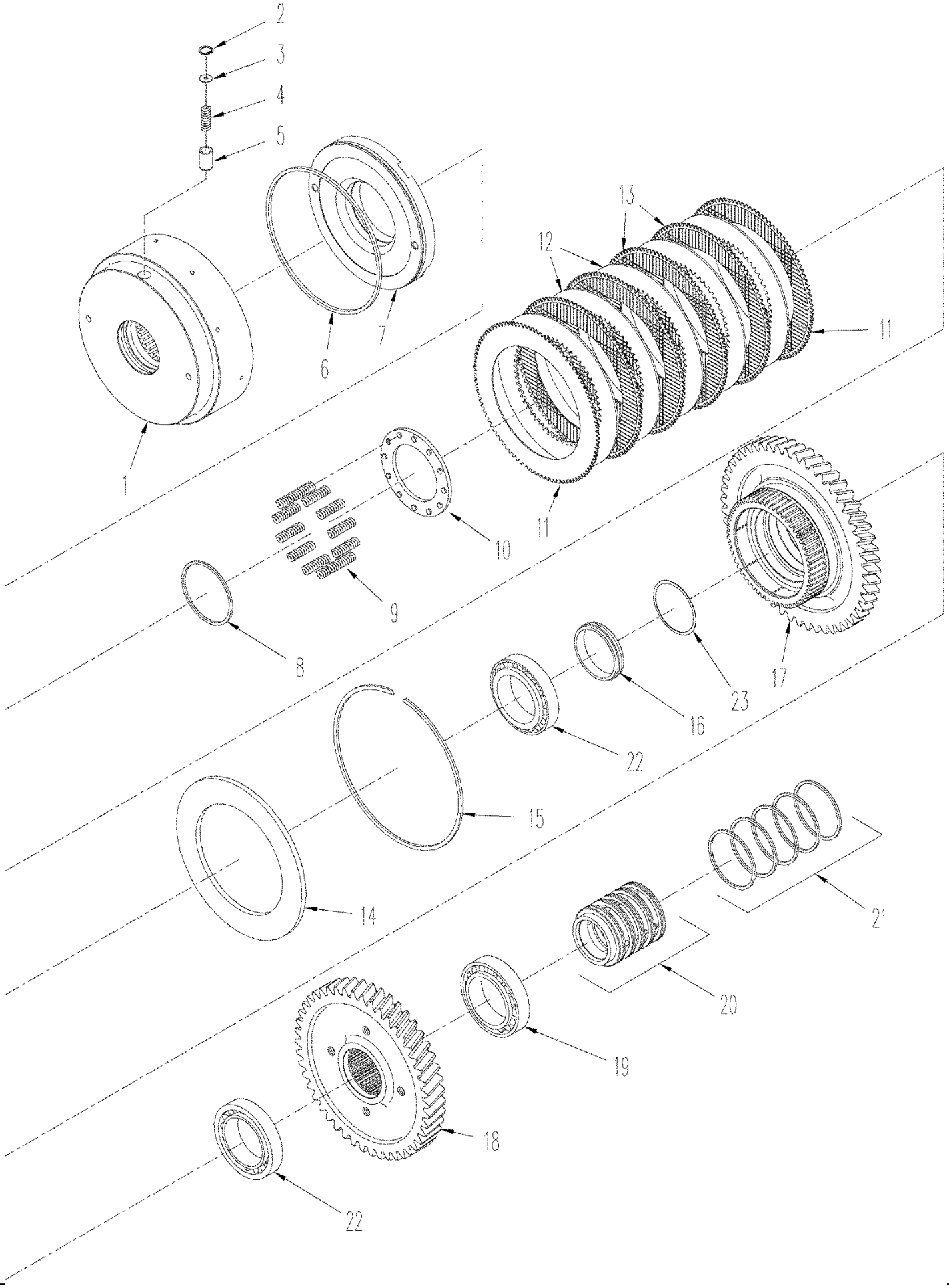

06 -24(2) POWER SHIFT TRANSMISSION - INPUT SHAFT ASSY

ссылка	Номер детали	Кол-во	Описание
	87431389	1	SHAFT ASSY., Input, 7, Inc. 1 - 23, Also See Figure : 06-24 (1)
1	358918A1	1	DRUM, 1F, Clutch
2	86642451	1	CIRCLIP, Snap
3	S3220S00F	1	SHIM, 0,70 mm (0,028 in)
4	S3210S00F	1	SPRING,
5	S3200S00F	1	VALVE, DRAIN,
6	S2630S00F	1	RING, Seal, BSN RVS002701
6	87431393	1	RING, Seal, ASN RVS002701
7	358970A1	1	PISTON,
8	S5510S00F	1	RING,
9	358971A1	12	SPRING,
10	358972A1	1	PLATE, Retaining
11	370555A1	2	DISC, CLUTCH, Face
12	S4110S00F	5	DISC, CLUTCH, 2,1 mm
12	S4070S00F	5	DISC, CLUTCH, 2,4 mm
13	370556A1	4	DISC, CLUTCH, Face, 8
14	442803A1	1	PLATE, End
15	428108A1	1	SNAP RING,
16	359203A1	1	SPACER,
17	359204A1	1	GEAR, 1F
18	359205A1	1	GEAR,
19	359206A1	1	BEARING, ROLLER, TAPERED, Roller
20	359207A1	1	CARRIER, Seal
21	S4150S00F	5	RING, Seal
22	E135785	2	BEARING, Roller
23	352818A1	AR	SHIM, 0,15 mm
23	352819A1	AR	SHIM, 0,18 mm
23	352820A1	AR	SHIM, 0,20 mm
23	352821A1	AR	SHIM, 0,25 mm
23	352822A1	AR	SHIM, 0,30 mm
23	352823A1	AR	SHIM, 0,50 mm
	87432750	1	KIT, GASKET, Transmission Repair, Inc. 6, 8, 21, See Figure(s) : 06-16 - 06-17 - 06-20 - 06-21 - 06-31

06 -26 POWER SHIFT TRANSMISSION - SECOND SHAFT ASSY

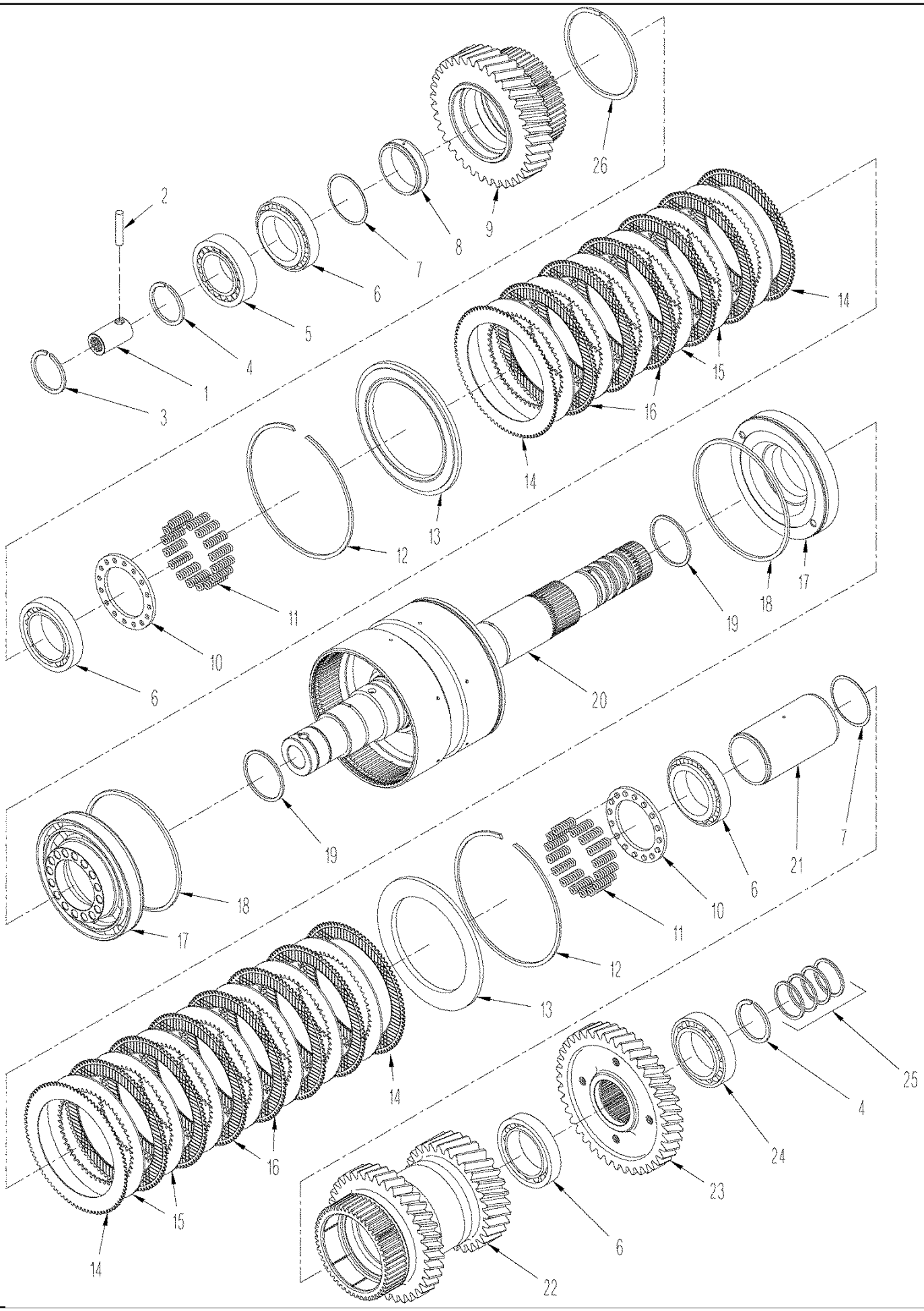

06 -26 POWER SHIFT TRANSMISSION - SECOND SHAFT ASSY

ссылка	Номер детали	Кол-во	Описание
	87431395	1	SHAFT ASSY., Second, Inc. 1 - 25
1	428673A1	1	COUPLING, SPLINED,
2	428674A1	1	DOWEL, Dowel
3	352816A1	1	SNAP RING, 3,0 mm
4	352378A1	AR	SNAP RING, 2,5 mm
4	352394A1	AR	SNAP RING, 2,6 mm
4	352397A1	AR	SNAP RING, 2,7 mm
4	352400A1	AR	SNAP RING, 2,8 mm
4	352815A1	AR	SNAP RING, 2,9 mm
4	352816A1	AR	SNAP RING, 3,0 mm
5	428183A1	1	BEARING,
6	E135785	4	BEARING, Roller
7	352818A1	AR	SHIM, 0,15 mm
7	352819A1	AR	SHIM, 0,18 mm
7	352820A1	AR	SHIM, 0,20 mm
7	352821A1	AR	SHIM, 0,25 mm
7	352822A1	AR	SHIM, 0,30 mm
7	352823A1	AR	SHIM, 0,50 mm
8	359260A1	1	SPACER,
9	87431396	1	GEAR, 2R
10	352827A1	2	PLATE, Spring
11	352828A1	32	SPRING,
12	352829A1	2	SNAP RING,
13	87431390	2	PLATE, Clutch End
14	352831A1	4	DISC, CLUTCH, Face, 7
15	S2080S00F	AR	DISC, CLUTCH, 2,4 mm, If Used
15	S2090S00F	AR	DISC, CLUTCH, 2,1 mm, If Used.
16	352832A1	11	DISC, CLUTCH, Face, 7
17	352833A1	2	PISTON, 7
18	87431391	2	RING, Seal
19	S2610S00F	2	RING, Piston
20	359280A1	1	SHAFT, Drum
21	362423A1	1	SPACER,
22	362542A1	1	GEAR, 2M
23	362543A1	1	GEAR, Driven
24	359206A1	1	BEARING, ROLLER, TAPERED, Roller
25	S3070S00F	4	RING, Seal
26	87431394	1	RING, Seal, ASN RVS002701
	87432750	1	KIT, GASKET, Transmission Repair, Inc. 18 & 26, See Figure: 06-10 (010 - 06-10 (13b)

06 -27 POWER SHIFT TRANSMISSION - THIRD SHAFT ASSY

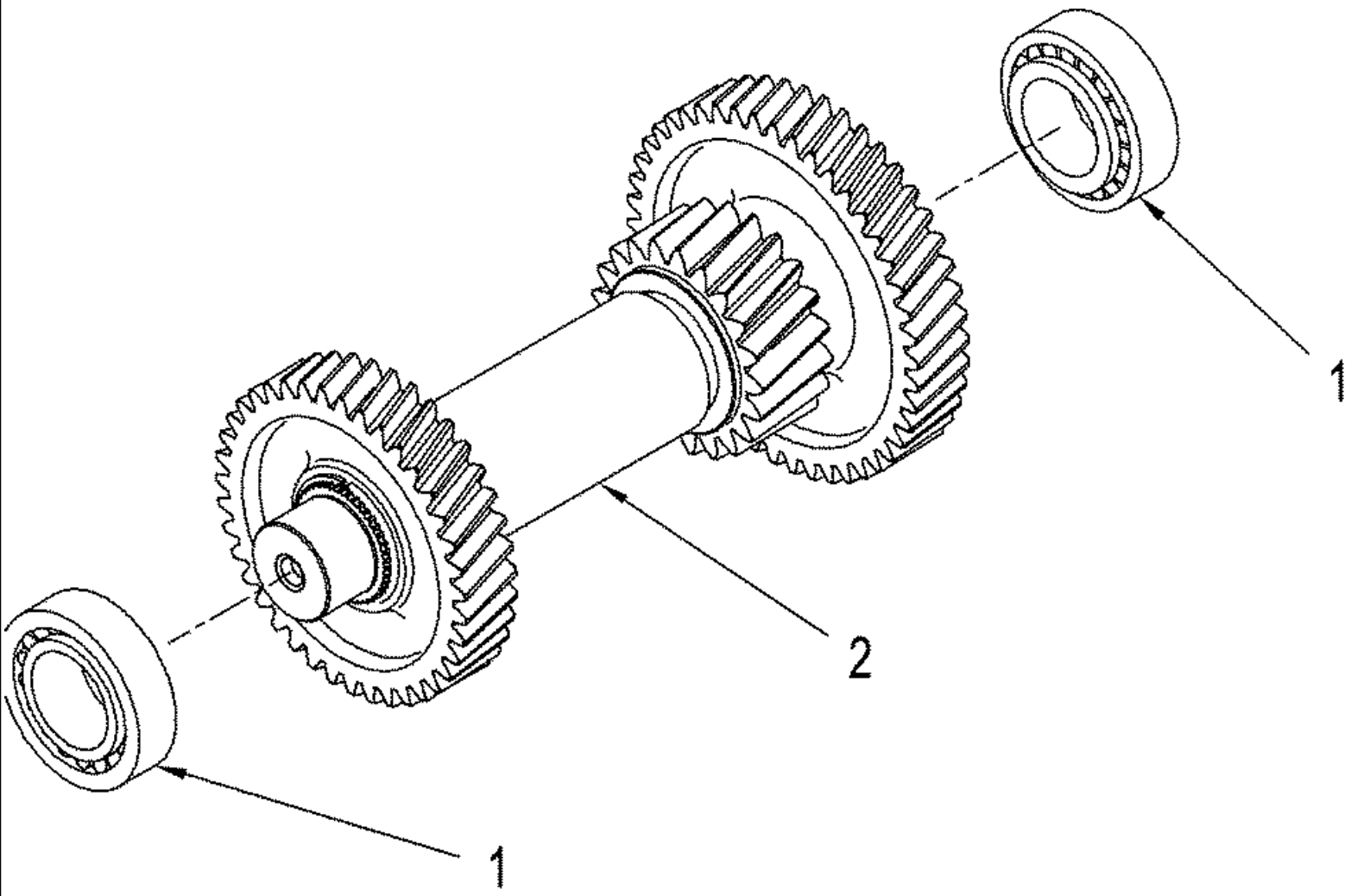

06 -27 POWER SHIFT TRANSMISSION - THIRD SHAFT ASSY

ссылка	Номер детали	Кол-во	Описание
1	87431397	2	BEARING,
2	87305940	1	SHAFT,

06 -28(1) POWER SHIFT TRANSMISSION - FOURTH SHAFT ASSY

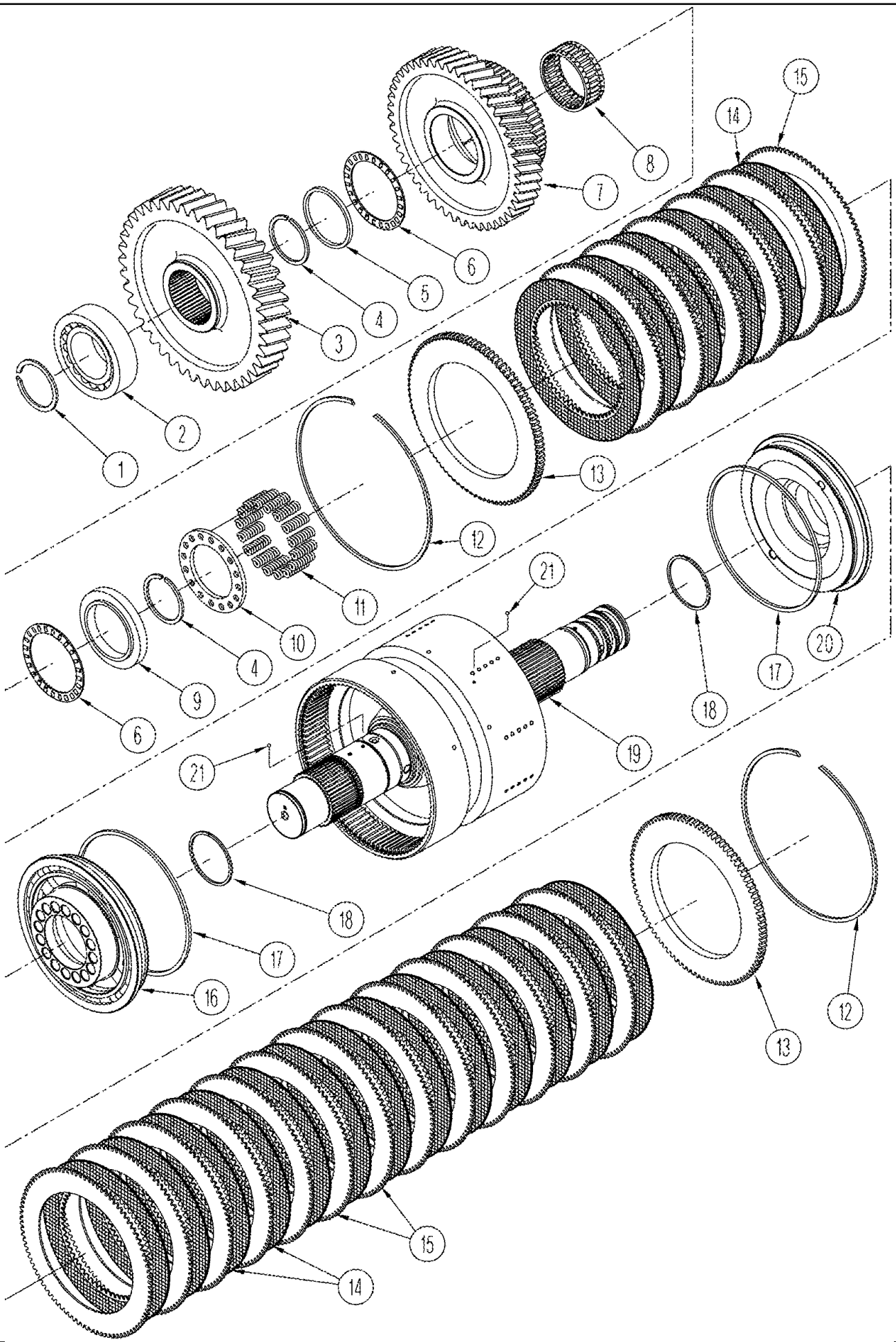

06 -28(1) POWER SHIFT TRANSMISSION - FOURTH SHAFT ASSY

ссылка	Номер детали	Кол-во	Описание
	87431399	1	SHAFT ASSY., Fourth, Inc. 1 - 21, Also See Figure : 06-28 (2)
1	427674A1	AR	SHIM, Retaining, 2,50 mm
1	427675A1	AR	SHIM, Retaining, 2,60 mm
1	427676A1	AR	SHIM, Retaining, 2,70 mm
1	427678A1	AR	SHIM, Retaining, 2,80 mm
1	427679A1	AR	SHIM, Retaining, 2,90 mm
1	427680A1	AR	SHIM, Retaining, 3,00 mm
2	428675A1	2	BEARING, Roller
3	362610A1	1	GEAR, Drive
4	S5040S00F	4	RING, Retaining
5	362611A1	3	SPACER,
6	353060A1	4	BEARING, THRUST, Needle
7	362612A1	1	GEAR, Driven
8	362613A1	1	BEARING, NEEDLE, Needle
9	362614A1	1	WASHER, THRUST,
10	362615A1	1	PLATE, Spring Retainer
11	362616A1	16	SPRING,
12	359235A1	2	SNAP RING,
13	362617A1	2	PLATE, Clutch End
14	362618A1	19	DISC, CLUTCH, Face
15	362628A1	AR	DISC, CLUTCH, 2,4 mm, Steel, If Used
15	362629A1	AR	DISC, CLUTCH, 2,6 mm, Steel, If Used
16	364822A1	1	PISTON, 9, Clutch
17	87431400	2	RING, Seal
18	S4410S00F	2	RING, Piston
19	364824A1	1	SHAFT, Drum
20	364825A1	1	PISTON, 9, Clutch
21	S14701960	2	BALL,
	87432750	1	KIT, GASKET, Transmission Repair, Inc. 18, See Figure: 06-10 (01) - 06-10 (13b)

06 -28(2) POWER SHIFT TRANSMISSION - FOURTH SHAFT ASSY

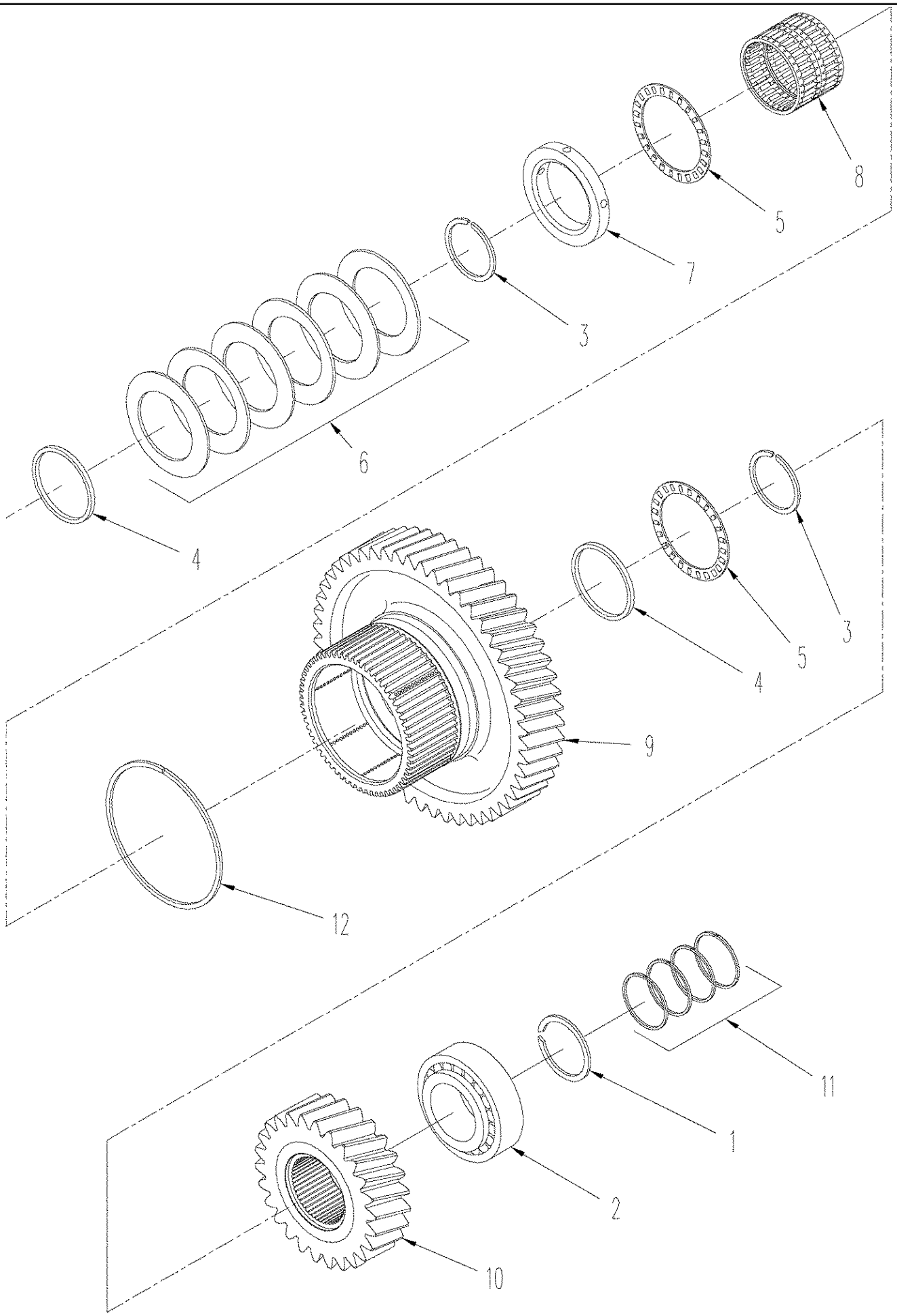

06 -28(2) POWER SHIFT TRANSMISSION - FOURTH SHAFT ASSY

ссылка	Номер детали	Кол-во	Описание
	87431399	1	SHAFT ASSY., Fourth, Inc. 1 - 12, Also See Figure : 06-28 (1)
1	427674A1	AR	SHIM, Retaining, 2,50 mm
1	427675A1	AR	SHIM, Retaining, 2,60 mm
1	427678A1	AR	SHIM, Retaining, 2,80 mm
1	427679A1	AR	SHIM, Retaining, 2,90 mm
1	427680A1	AR	SHIM, Retaining, 3,00 mm
2	428675A1	2	BEARING, Roller
3	S5040S00F	4	RING, Retaining
4	362611A1	3	SPACER,
5	353060A1	4	BEARING, THRUST, Needle
6	364826A1	6	PLATE, Spring
7	364827A1	1	WASHER, THRUST,
8	S5070S00F	2	BEARING, NEEDLE,
9	364828A1	1	GEAR, DRIVEN, Drive
10	364830A1	1	GEAR, Drive
11	87431401	4	RING, Seal
12	392073A1	1	SEALRING,
	87432750	1	KIT, GASKET, Transmission Repair, Inc. 11, See Figure(s) : 06-16, 06-17, 06-20 - 06-31

06 -30(1) POWER SHIFT TRANSMISSION - FIFTH SHAFT ASSY

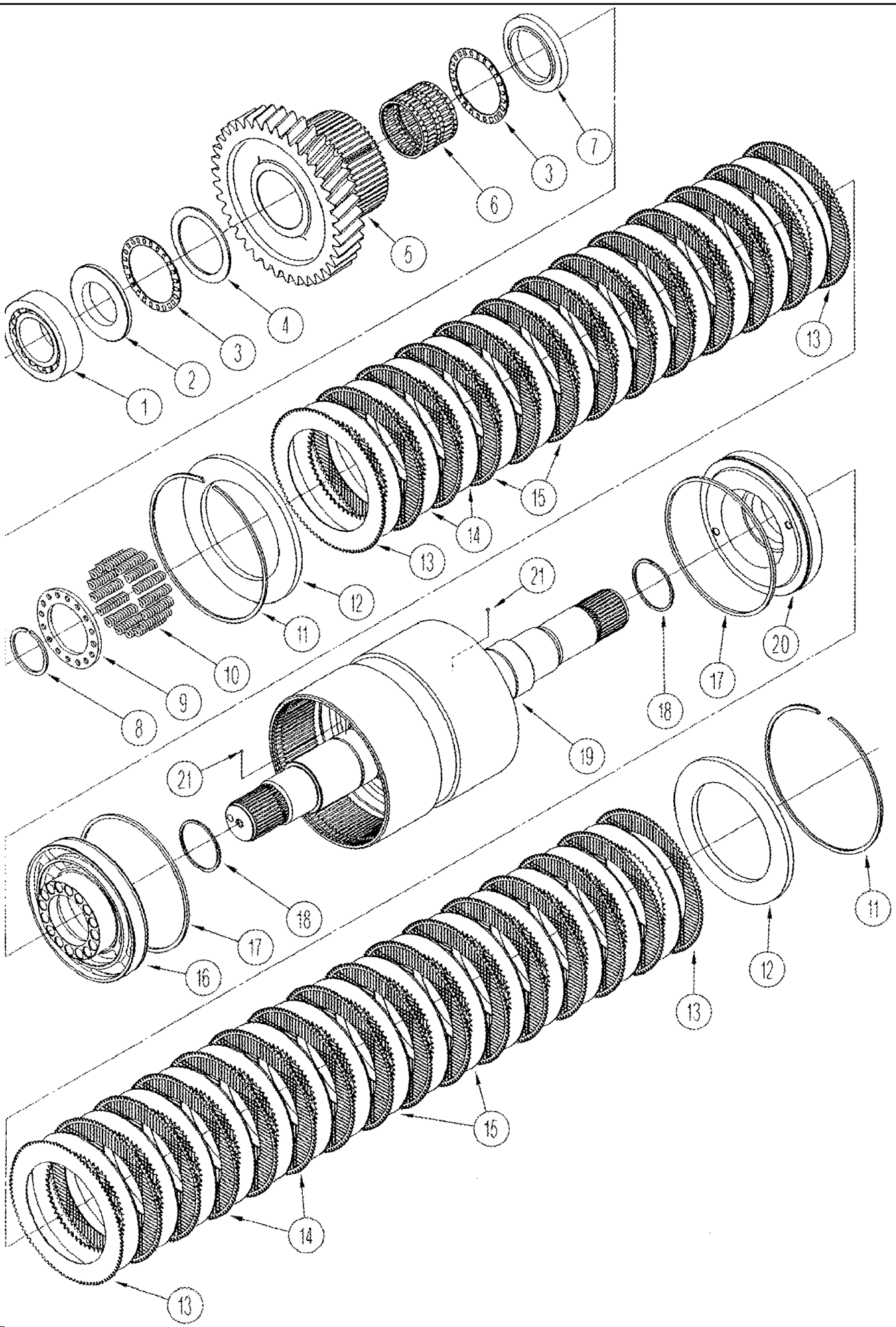

06 -30(1) POWER SHIFT TRANSMISSION - FIFTH SHAFT ASSY

ссылка	Номер детали	Кол-во	Описание
	87431402	1	SHAFT ASSY., Fifth, Inc. 1 - 21, Also See Figure 06-30 (2)
1	428675A1	1	BEARING, Roller
2	364831A1	1	WASHER, THRUST,
3	353060A1	2	BEARING, THRUST, Needle
4	358908A1	1	WASHER, THRUST,
5	364832A1	1	GEAR, Driven
6	S5070S00F	1	BEARING, NEEDLE,
7	362614A1	1	WASHER, THRUST,
8	S5040S00F	4	RING, Retaining
9	362615A1	1	PLATE, Spring Retaining
10	364833A1	16	SPRING,
11	428108A1	2	SNAP RING,
12	370554A1	2	DISC, CLUTCH,
13	370555A1	4	DISC, CLUTCH, Face
14	S4070S00F	AR	DISC, CLUTCH, 2,4 mm, If Used
14	S4110S00F	AR	DISC, CLUTCH, 2,1 mm, If Used
15	370556A1	25	DISC, CLUTCH, 8 in, Face
16	370558A1	1	PISTON, 8 in
17	87431400	2	RING, Seal
18	S4410S00F	2	RING, Piston
19	370561A1	1	SHAFT, Drum
20	370562A1	1	PISTON, 8 in
21	S14701960	2	BALL,
	87432750	1	KIT, GASKET, Transmission Repair, Inc. 17, 18, See Figure(s) : 06-16, 06-17, 06-20 - 06-31

06 -30(2) POWER SHIFT TRANSMISSION - FIFTH SHAFT ASSY

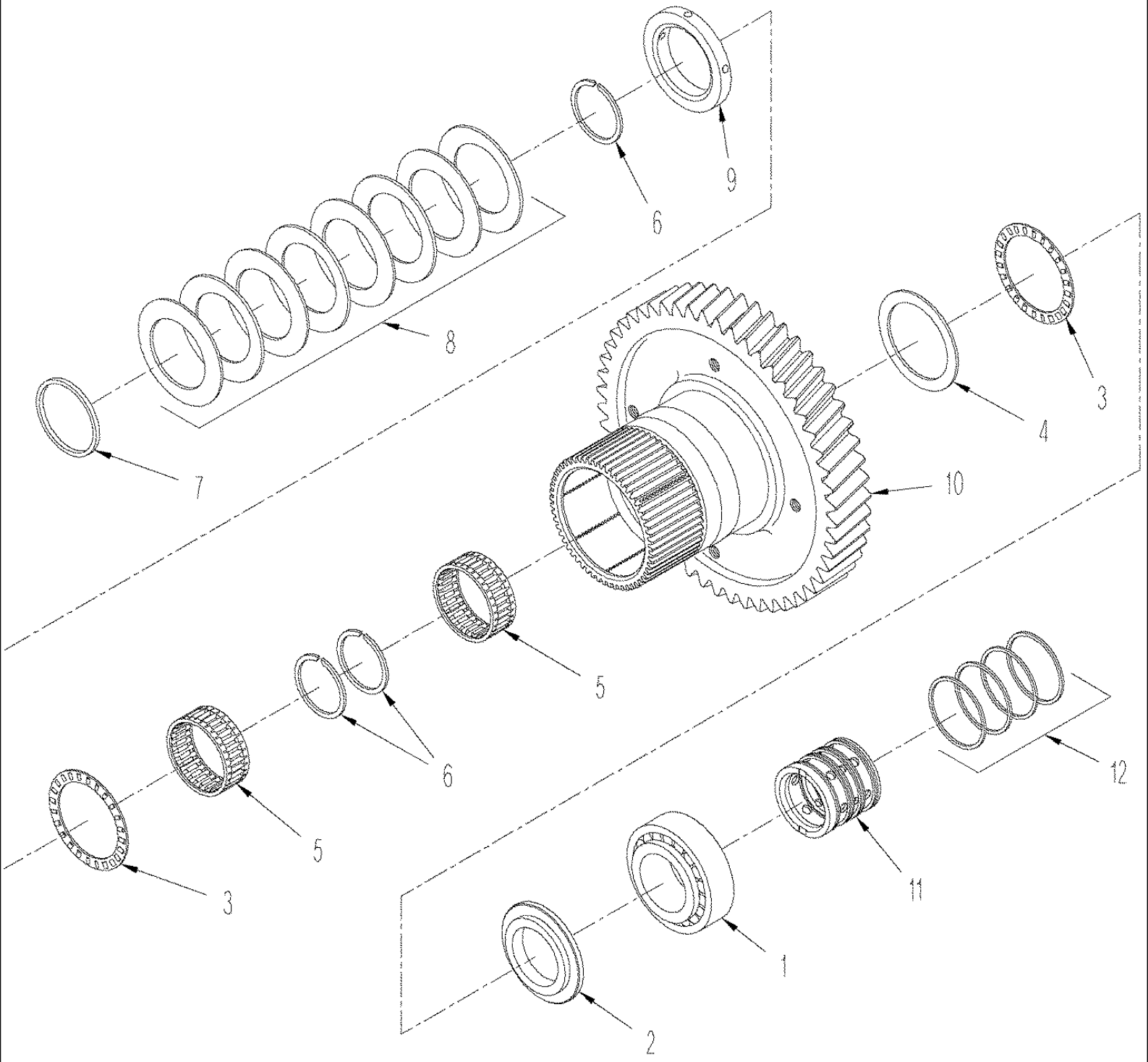

06 -30(2) POWER SHIFT TRANSMISSION - FIFTH SHAFT ASSY

ссылка	Номер детали	Кол-во	Описание
	87431402	1	SHAFT ASSY., Fifth, Inc. 1 - 12, Also See Figure : 06-30 (1)
1	428675A1	1	BEARING, Roller
2	364831A1	1	WASHER, THRUST,
3	353060A1	2	BEARING, THRUST, Needle
4	358908A1	1	WASHER, THRUST,
5	S5070S00F	1	BEARING, NEEDLE,
6	S5040S00F	4	RING, Retaining
7	362611A1	1	SPACER,
8	364826A1	8	PLATE, Spring
9	364827A1	1	WASHER, THRUST,
10	370566A1	1	GEAR, Driven
11	370568A1	1	CARRIER, Seal
12	S4150S00F	4	RING, Seal
	87432750	1	KIT, GASKET, Transmission Repair, Inc. 12, See Figure(s) : 06-16, 06-17, 06-20 - 06-31

06 -32 DRIVE SHAFT MOUNTING

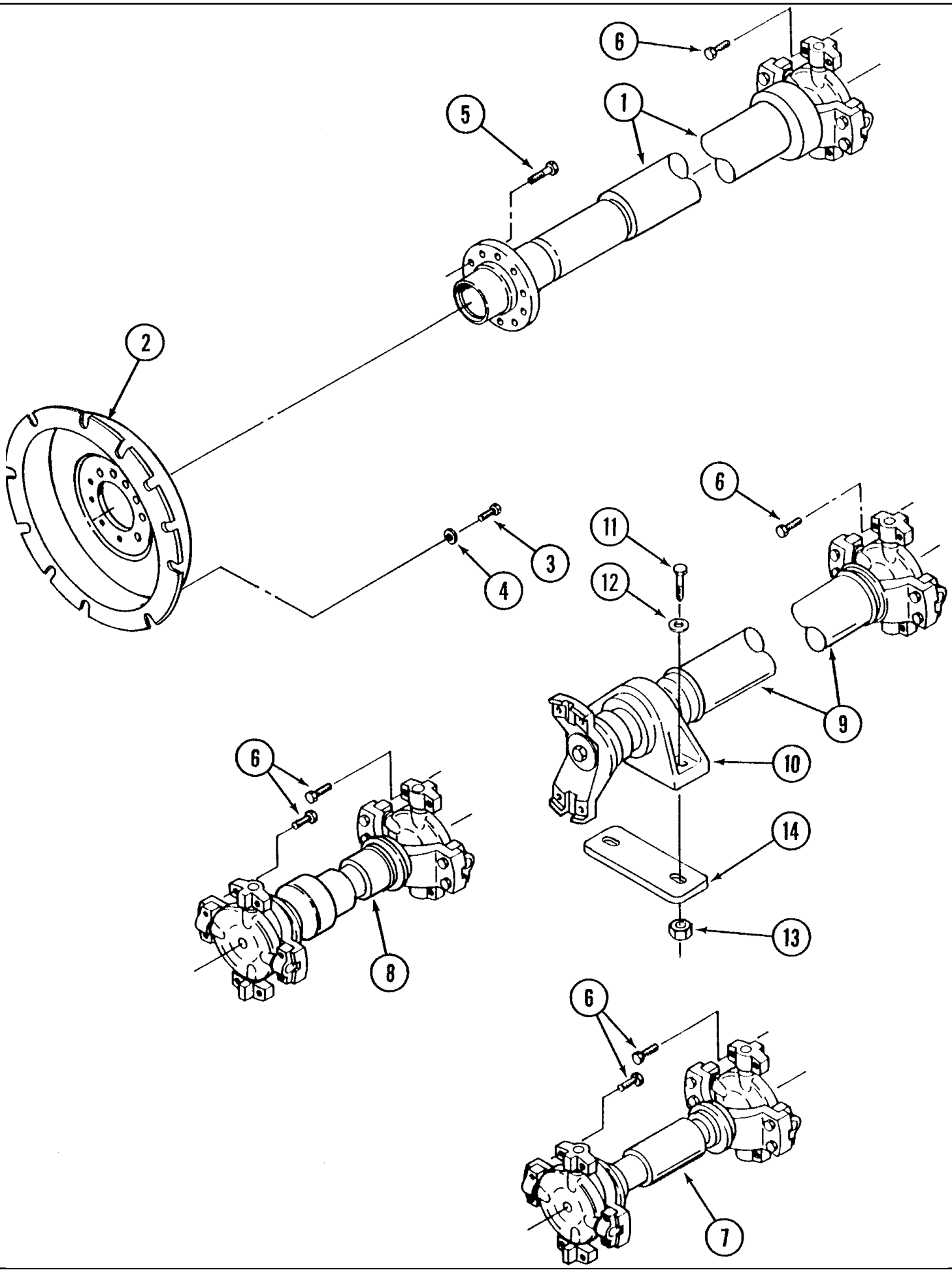

TJ375 TRACTOR - Power Train

06 -32 DRIVE SHAFT MOUNTING

ссылка	Номер детали	Кол-во	Описание
1	402185A1	1	SHAFT, DRIVE, Input, See Figure(s) : 6-33, With Manual Shift Transmission, TJ425 Manual Shift Transmission, TJ375
1	402190A1	1	SHAFT, DRIVE, Input, See Figure(s) : 6-33, TJ425 Manual Shift Transmission, TJ375 Heavy Duty, TJ450, With Manual Shift Transmission, TJ500
1	402184A1	1	SHAFT, DRIVE, Input, See Figure(s) : 6-33, TJ425 Manual Shift Transmission, TJ375, With Power Shift Transmission
1	402189A1	1	SHAFT, DRIVE, Input, See Figure(s) : 6-33, With Power Shift Transmission, TJ425 Manual Shift Transmission, TJ375 Heavy Duty, TJ450, TJ500
2	378758A2	1	DAMPER, Vibration, Also Order 86639139
3	86639139	12	SCREW, 12 Pt Flg, Hd, 7/16"-14 x 1, Flange, 7/16 x 1; 8
4	496-81010	12	WASHER, 11 x 21 x 2.5 mm
5	88685	10	BOLT, Hex, 5/8"-11 x 1 1/2", G8, Full Thd, Cap, HH, G8, 5/8"-11 x 1-1/2"
6	337476	24	BOLT, Hex, M12 x 50, 10.9, Cap, HH, CL 10.9, M12 x 1.75 x 50, TJ425 Manual Shift Transmission, TJ375
6	43263	24	BOLT, Hex, M12 x 60, 10.9, CL 10.9, M12 x 1.75 x 60, TJ425 Manual Shift Transmission, TJ375 Heavy Duty, TJ450, TJ500
7	402186A1	1	SHAFT, DRIVE, Front Axle, See Figure(s) : 06-33, TJ425 Manual Shift Transmission, TJ375
7	402191A1	1	SHAFT, DRIVE, Front Axle, See Figure(s) : 06-33, TJ425 Manual Shift Transmission, TJ375 Heavy Duty, TJ450, TJ500
8	402187A1	1	SHAFT, DRIVE, Articulation, See Figure(s) : 06-33, TJ375 Axle, TJ425 Manual Shift Transmission
8	402192A1	1	SHAFT, DRIVE, Articulation, See Figure(s) : 06-33, TJ425 Manual Shift Transmission, TJ375 Heavy Duty, TJ450, TJ500
9	402188A1	1	SHAFT, DRIVE, Rear Axle, See Figure(s) : 06-33, TJ375 Axle, TJ425 Manual Shift Transmission
9	402193A1	1	SHAFT, DRIVE, Rear Axle, See Figure(s) : 06-33, TJ425 Manual Shift Transmission, TJ375 Heavy Duty, TJ450, TJ500
10	451767A1	1	BEARING, Support, Pillow Block, See Figure(s) : 06-33
11	86639168	2	BOLT, Hex, M20 x 250, 10.9, M20 x 250; 10.9
12	86639327	2	WASHER, 22 x 44 x 5 mm
13	9847024	2	NUT, M20, Cl 10,
14	406056A1	1	SPACER,

06 -33 DRIVE SHAFT

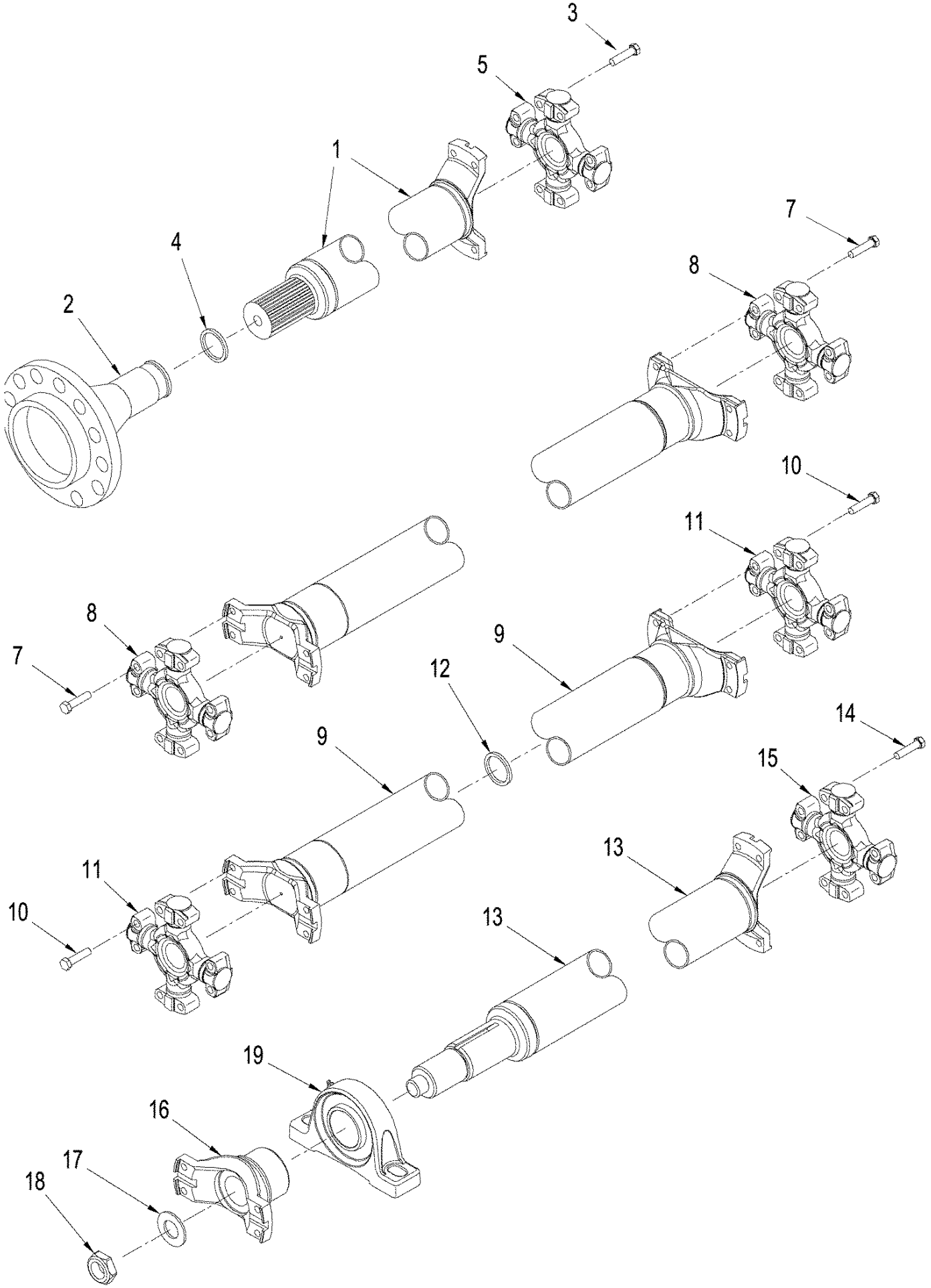

ссылка	Номер детали	Кол-во	Описание
	402185A1	1	SHAFT, DRIVE, Input, Inc. 1 - 5, With Manual Shift Transmission, TJ375, TJ425
	402190A1	1	SHAFT, DRIVE, Input, Inc. 1 - 5, TJ425, With Manual Shift Transmission, TJ500, TJ450, TJ375 Heavy Duty
	402184A1	1	SHAFT, DRIVE, Input, Inc. 1 - 5, TJ425, With Power Shift Transmission, TJ375
	402189A1	1	SHAFT, DRIVE, Input, Inc. 1 - 5, With Power Shift Transmission, TJ425, TJ375 Heavy Duty, TJ450, TJ500
1	NSS	1	NOT SERVICED SEPARATELY, Shaft, Slip Yoke
2	NSS	1	NOT SERVICED SEPARATELY, Shaft, Flanged
3	337476	4	BOLT, Hex, M12 x 50, 10.9, Cap, HH, CL 10.9, M12 x 1.75 x 50, TJ425 Manual Shift Transmission, TJ375
3	43263	4	BOLT, Hex, M12 x 60, 10.9, CL 10.9, M12 x 1.75 x 60, TJ425 Manual Shift Transmission, TJ375 Heavy Duty, TJ450
4	404151A1	1	SEAL, Dust
5	86000308	1	KIT, Spider Bearing, 8C, TJ425 Manual Shift Transmission, TJ375
5	309093A1	1	SPIDER ASSY., 8,5C, TJ425 Manual Shift Transmission, TJ375 Heavy Duty, TJ450, TJ500
	402186A1	1	SHAFT, DRIVE, Front Axle, Inc. 6 - 8, TJ425 Manual Shift Transmission, TJ375
	402191A1	1	SHAFT, DRIVE, Front Axle, Inc. 6 - 8, TJ425 Manual Shift Transmission, TJ375 Heavy Duty, TJ450, TJ500
6	NSS	1	NOT SERVICED SEPARATELY, Shaft
7	337476	8	BOLT, Hex, M12 x 50, 10.9, Cap, HH, CL 10.9, M12 x 1.75 x 50, TJ425 Manual Shift Transmission, TJ375
7	43263	8	BOLT, Hex, M12 x 60, 10.9, CL 10.9, M12 x 1.75 x 60, TJ425 Manual Shift Transmission, TJ375 Heavy Duty, TJ450, TJ500
8	431621A1	2	SPIDER ASSY., 8C, TJ425 Manual Shift Transmission, TJ375
8	309093A1	2	SPIDER ASSY., 8,5C, TJ425 Manual Shift Transmission, TJ375 Heavy Duty, TJ450, TJ500
	402187A1	1	SHAFT, DRIVE, Articulation, Inc. 9 - 12, TJ425 Manual Shift Transmission, TJ375
	402192A1	1	SHAFT, DRIVE, Articulation, Inc. 9 - 12, TJ425 Manual Shift Transmission, TJ375 Heavy Duty, TJ450, TJ500
9	NSS	1	NOT SERVICED SEPARATELY, Shaft
10	337476	8	BOLT, Hex, M12 x 50, 10.9, Cap, HH, CL 10.9, M12 x 1.75 x 50, TJ425 Manual Shift Transmission, TJ375
10	43263	8	BOLT, Hex, M12 x 60, 10.9, CL 10.9, M12 x 1.75 x 60, TJ425 Manual Shift Transmission, TJ375 Heavy Duty, TJ450, TJ500
11	431621A1	2	SPIDER ASSY., 8C, TJ425 Manual Shift Transmission, TJ375
11	309093A1	2	SPIDER ASSY., 8,5C, TJ425 Manual Shift Transmission, TJ375 Heavy Duty, TJ450, TJ500
12	404151A1	1	SEAL,
	402188A1	1	SHAFT, DRIVE, Rear Axle, Inc. 13 - 18, TJ425 Manual Shift Transmission, TJ375
	402193A1	1	SHAFT, DRIVE, Rear Axle, Inc. 13 - 18, TJ425 Manual Shift Transmission, TJ375 Heavy Duty, TJ450, TJ500
13	NSS	1	NOT SERVICED SEPARATELY, Shaft
14	337476	4	BOLT, Hex, M12 x 50, 10.9, Cap, HH, CL 10.9, M12 x 1.75 x 50, TJ425 Manual Shift Transmission, TJ375
14	43263	4	BOLT, Hex, M12 x 60, 10.9, CL 10.9, M12 x 1.75 x 60, TJ425 Manual Shift Transmission, TJ375 Heavy Duty, TJ450, TJ500
15	431621A1	1	SPIDER ASSY., 8C, TJ425 Manual Shift Transmission, TJ375

06 -33 DRIVE SHAFT

ссылка	Номер детали	Кол-во	Описание
15	309093A1	1	SPIDER ASSY., 8,5C, TJ425 Manual Shift Transmission, TJ375 Heavy Duty, TJ450, TJ500
16	404451A1	1	YOKE, 8C, TJ425 Manual Shift Transmission, TJ375
16	407633A1	1	YOKE, 8,5C, TJ425 Manual Shift Transmission, TJ375 Heavy Duty, TJ450, TJ500
17	86637815	1	WASHER, 1 5/16" x 2 1/2" x .150", 1-5/16 x 2-1/2 x 1/64
18	86637649	1	NUT, LOCK, 1 1/4"-18,
19	451767A1	1	BEARING, Support, Pillow Block

06 -34 POWER TAKEOFF DRIVE SHAFT MOUNTING

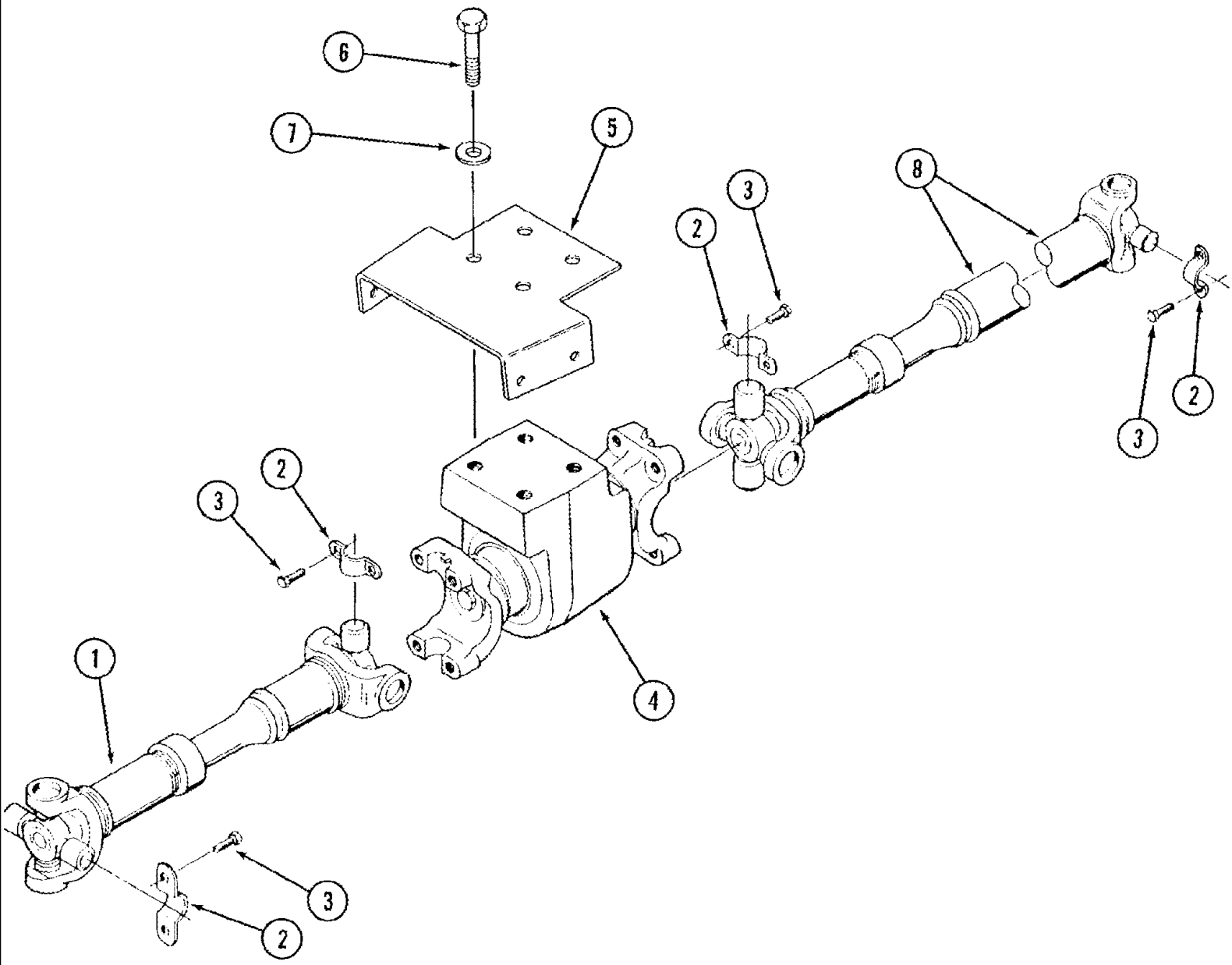

06 -34 POWER TAKEOFF DRIVE SHAFT MOUNTING

ссылка	Номер детали	Кол-во	Описание
1	404798A1	1	SHAFT, Articulation, See Figure(s) : 06-35
2	L116943	8	CLAMP,
3	86639301	16	SCREW, 12 Pt Hd, M10 x 20, 12.9, M10 x 20
4	NSS	1	NOT SERVICED SEPARATELY, Bearing Assy, Hanger, See Figure(s) : 06-35
5	404604A1	1	BRACKET,
6	86577946	4	BOLT, Hex, M16 x 80, 10.9, Hex, M16 x 80, 10.9, TJ375
6	86521733	4	BOLT, Hex, M16 x 90, 10.9, , TJ425, TJ450, TJ375 Heavy Duty
7	86625266	4	WASHER, M17.5 x 30 x 4, HT,
8	404799A1	1	SHAFT, DRIVE, Rear, See Figure(s) : 06-35

06 -35 POWER TAKEOFF DRIVE SHAFT ASSEMBLIES

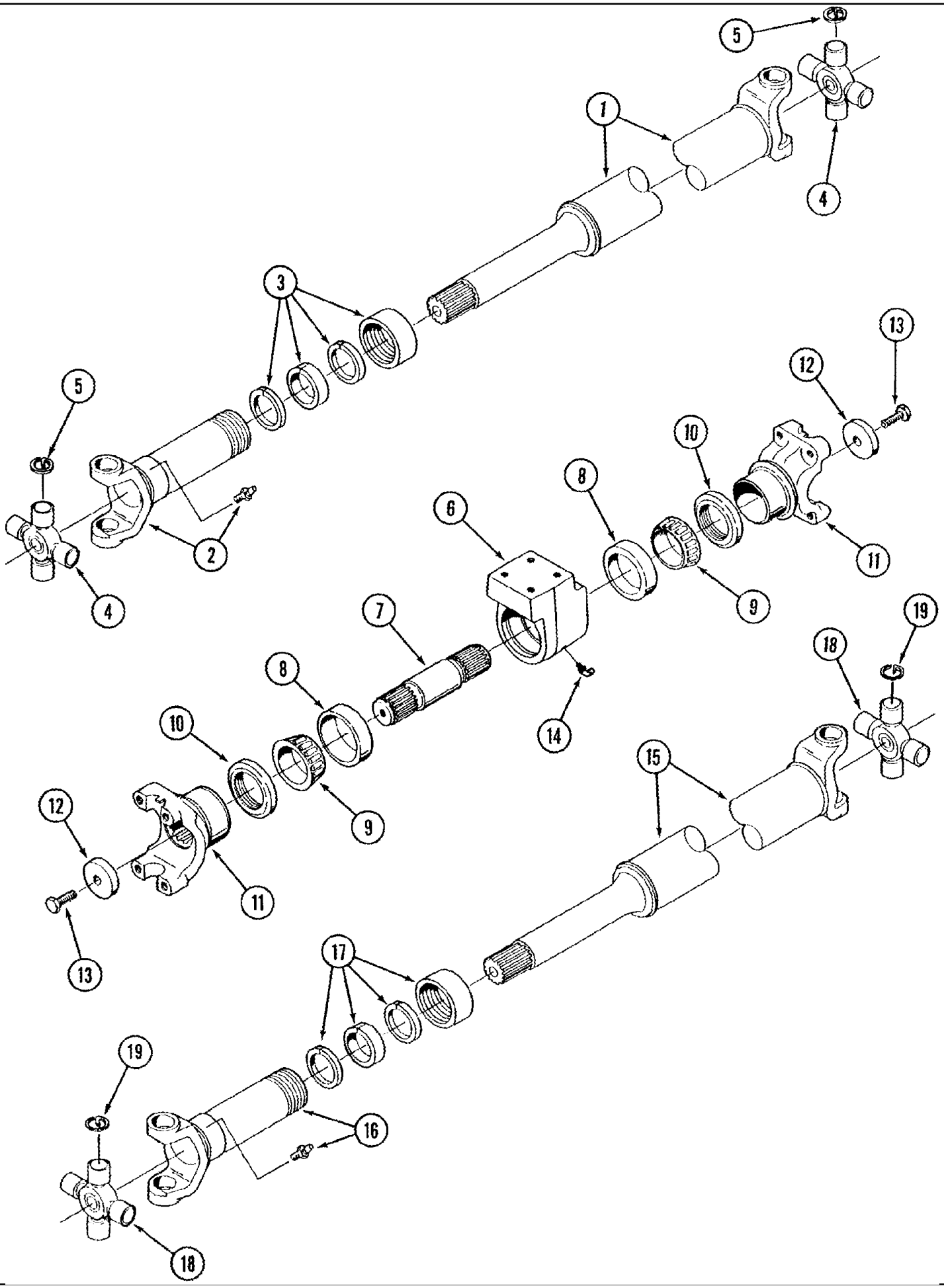

06 -35 POWER TAKEOFF DRIVE SHAFT ASSEMBLIES

ссылка	Номер детали	Кол-во	Описание
	404798A1	1	SHAFT, Articulation, Inc. 1 - 4
1	NSS	1	NOT SERVICED SEPARATELY, Yoke, Slip
2	NSS	1	NOT SERVICED SEPARATELY, Shaft
3	443088A1	1	RETAINER, SEAL,
4	S300313	2	SPIDER ASSY., Inc. 5
5	S92378	4	SNAP RING, Retaining
6	399447A1	1	HOUSING, BEARING, Hanger
7	399446A1	1	SHAFT,
8	435535A1	2	BEARING, CUP, Cup
9	435536A1	2	BEARING, CONE, Cone
10	435537A1	2	SEAL,
11	398554A1	2	YOKE,
12	435427A1	2	WASHER, 5/8 x 2-3/4 x 1/2
13	374835	2	BOLT, Hex, M16 x 40, 10.9, Hex, M16 x 40, 10.9
14	80717	1	NIPPLE, LUBE, 45є, 1/8" NPT x 7/8" lg, 45 deg, 1/8 PT x 7/8
	404799A1	1	SHAFT, DRIVE, Rear, Inc. 15 - 18
15	NSS	1	NOT SERVICED SEPARATELY, Shaft
16	NSS	1	NOT SERVICED SEPARATELY, Yoke, Slip
17	443088A1	1	RETAINER, SEAL,
18	S300313	2	SPIDER ASSY., Inc. 19
19	S92378	4	SNAP RING, Retaining

06 -36 POWER TAKEOFF LUBRICATION TJ375, BSN RVS001801

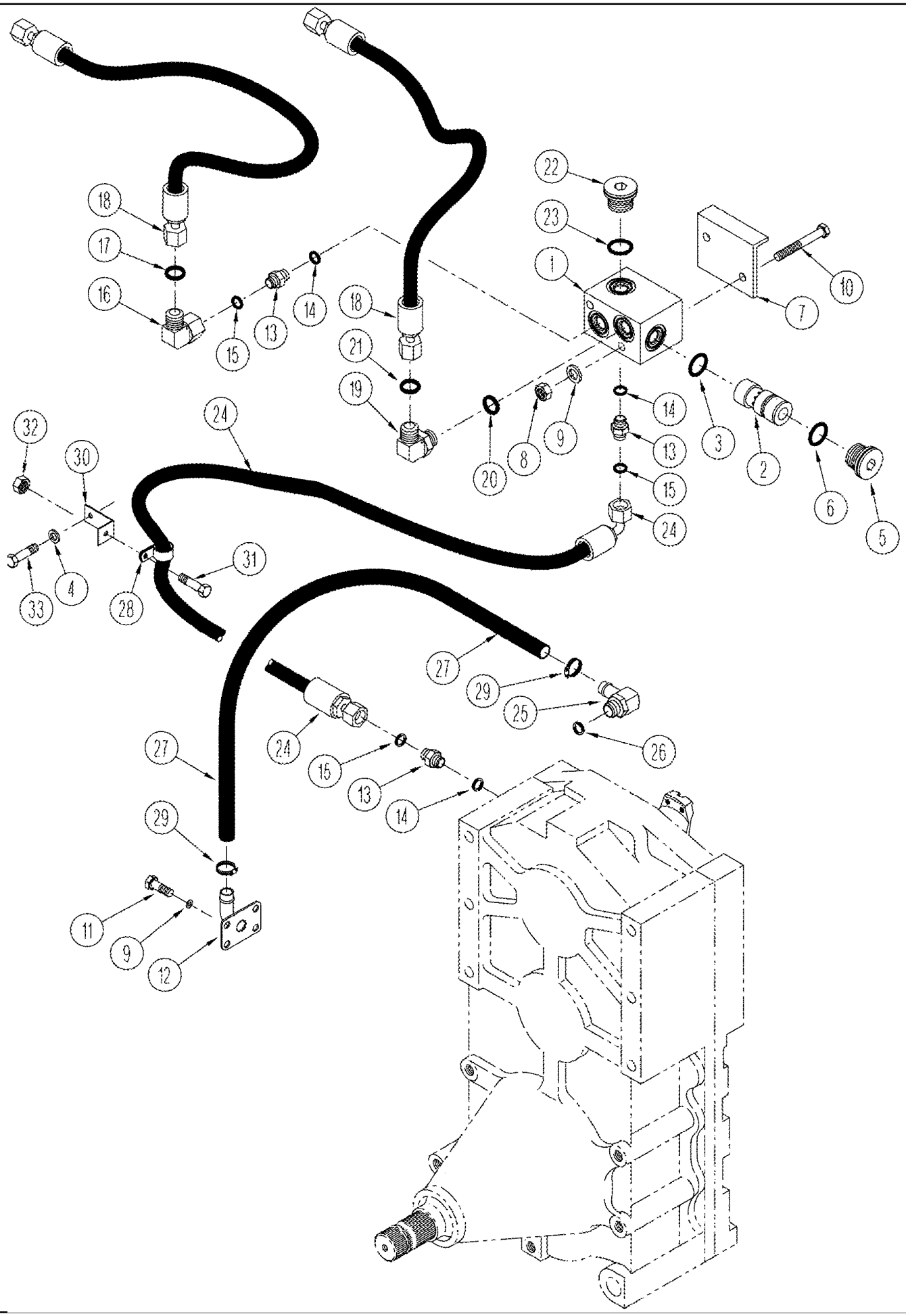

TJ375 TRACTOR - Power Train

06 -36 POWER TAKEOFF LUBRICATION TJ375, BSN RVS001801

ссылка	Номер детали	Кол-во	Описание
1	370157A1	1	BODY, Jet Pump
2	347294A3	1	PUMP,
3	9861410	1	O-RING, -017, 90 Duro, .676" ID x .070" Thk,
4	86624177	1	WASHER, M12 x 24 x 2.5, 13,5 x 24 x 2,5 mm
5	221580A1	1	PLUG, Hex Soc, M27 x 2, ORB, Includes 6
6	86639045	1	O-RING, Cl 6, 23.6MM ID x 2.9 Thk, 23.6 ID x 2.9
7	416099A1	1	BRACKET,
8	86500689	2	NUT, M10, Cl 10, M10; 10.9
9	86632602	6	WASHER, LOCK, Ext Tooth, M10, 11 x 20 x 2 mm
10	43252	1	BOLT, Hex, M10 x 80, 10.9, Cap, HH, CL 10.9, M10 x 1.5 x 80
11	9846677	4	BOLT, Hex, M10 x 25, 10.9, Full Thd, Cap, HH, CL 10.9, M10 x 1.5 x 25
12	416087A1	1	TUBE, Flange
13	86579676	3	CONNECTOR, HYD., 13/16"-16 ORFS x M18 x 1.5 ORB, 13/16 fc sl x 18 Or, Inc. 14, 15
14	86639043	1	O-RING, 15,3 ID x 2,2
16	84989383	1	ELBOW, 90є, 13/16"-16 ORFS x 13/16"-16 Fem Sw, 90, 13/16 fc sl x swl, Inc. 17
18	365039A1	2	HOSE, 430 mm (17 in)
19	86579691	1	ELBOW, 90є, 13/16"-18 ORFS x M18 x 1.5 ORB, Includes 20, 21
20	86639043	1	O-RING, 15,3 ID x 2,2
22	221578A1	1	PLUG, Hex Soc, M18 x 1.5, ORB, Includes 23
23	86639043	1	O-RING, 15,3 ID x 2,2
24	366703A2	1	HOSE, 202 mm (79-1/2 in)
25	370246A1	1	ELBOW, 90, M33 orb x 2,0, Inc. 26
26	86639046	1	O-RING, Cl 6, 29.6MM ID x 2.9 Thk, 29,6 ID x 2,9
27	366701A1	1	HOSE, 1092 mm (43 in)
28	86625037	1	CLAMP, 15/16", Insul, 1/2" Bolt, 15/16 in ID
29	507586	2	CLAMP, HOSE, #20, 0.81/1.75 Type F Worm, No. 20
30	416102A1	1	SUPPORT,
31	43233	1	BOLT, Hex, M8 x 20, 10.9, Cap, HH, CL 10.9, M8 x 1.25 x 20
32	43362	1	NUT, M8, Cl 10,
33	398792	1	BOLT, Hex, M12 x 25, 10.9, Cap, HH, CL 10.9, M12 x 1.75 x 25
15	9992298	1	O-RING, -014, 90 Duro, .489" ID x .070" Thk,
17	9992298	1	O-RING, -014, 90 Duro, .489" ID x .070" Thk,
21	9992298	1	O-RING, -014, 90 Duro, .489" ID x .070" Thk,

06 -36(01) POWER TAKEOFF LUBRICATION TJ375, ASN RVS001801

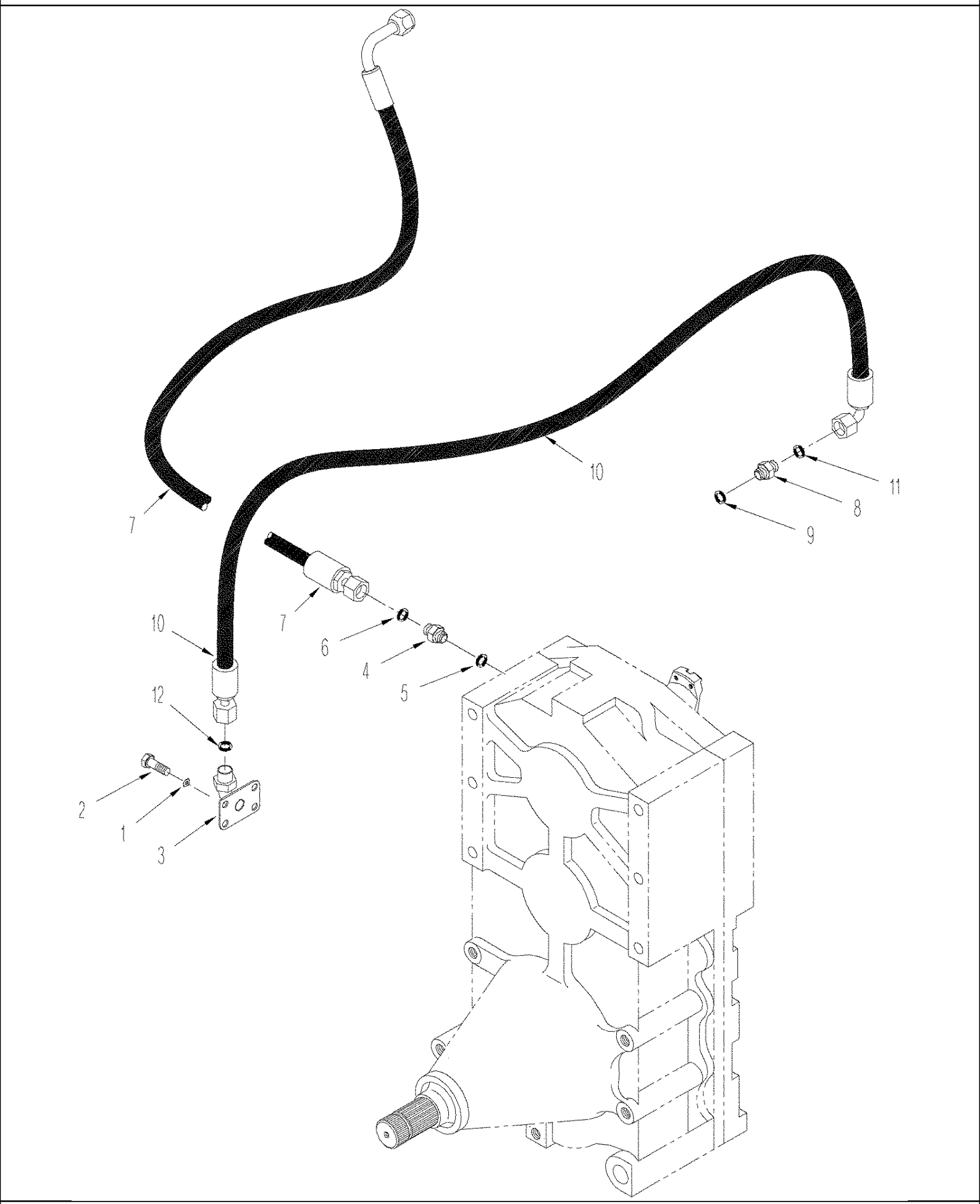

TJ375 TRACTOR - Power Train

06 -36(01) POWER TAKEOFF LUBRICATION TJ375, ASN RVS001801

ссылка	Номер детали	Кол-во	Описание
1	86632602	4	WASHER, LOCK, Ext Tooth, M10, 11 x 20 x 2 mm
2	9846677	4	BOLT, Hex, M10 x 25, 10.9, Full Thd, Cap, HH, CL 10.9, M10 x 1.5 x 25
3	86992408	1	FITTING, Flange
4	86579676	3	CONNECTOR, HYD., 13/16"-16 ORFS x M18 x 1.5 ORB, 13/16 fc sl x 18 Or, Inc. 14, 15
5	86639043	1	O-RING, 15,3 ID x 2,2
7	86994525	1	HOSE ASSY., 3251 mm (128 in)
8	86579680	1	CONNECTOR, HYD., 1"-14 ORFS x M22 x 1.5 ORB, Includes 9, 11
9	86642449	1	O-RING, Cl 6, 13.3MM ID x 2.2 Thk, 13,3 ID x 2,2 thk
10	86994526	1	HOSE ASSY., 1270 mm (50 in)
11	9992069	2	O-RING, -016, 90 Duro, .614" ID x .070" Thk,
6	9992298	1	O-RING, -014, 90 Duro, .489" ID x .070" Thk,
12	9992298	1	O-RING, -014, 90 Duro, .489" ID x .070" Thk,

06 -37 POWER TAKEOFF LUBRICATION TJ375 HD, TJ425 , TJ450, BSN RVS001801

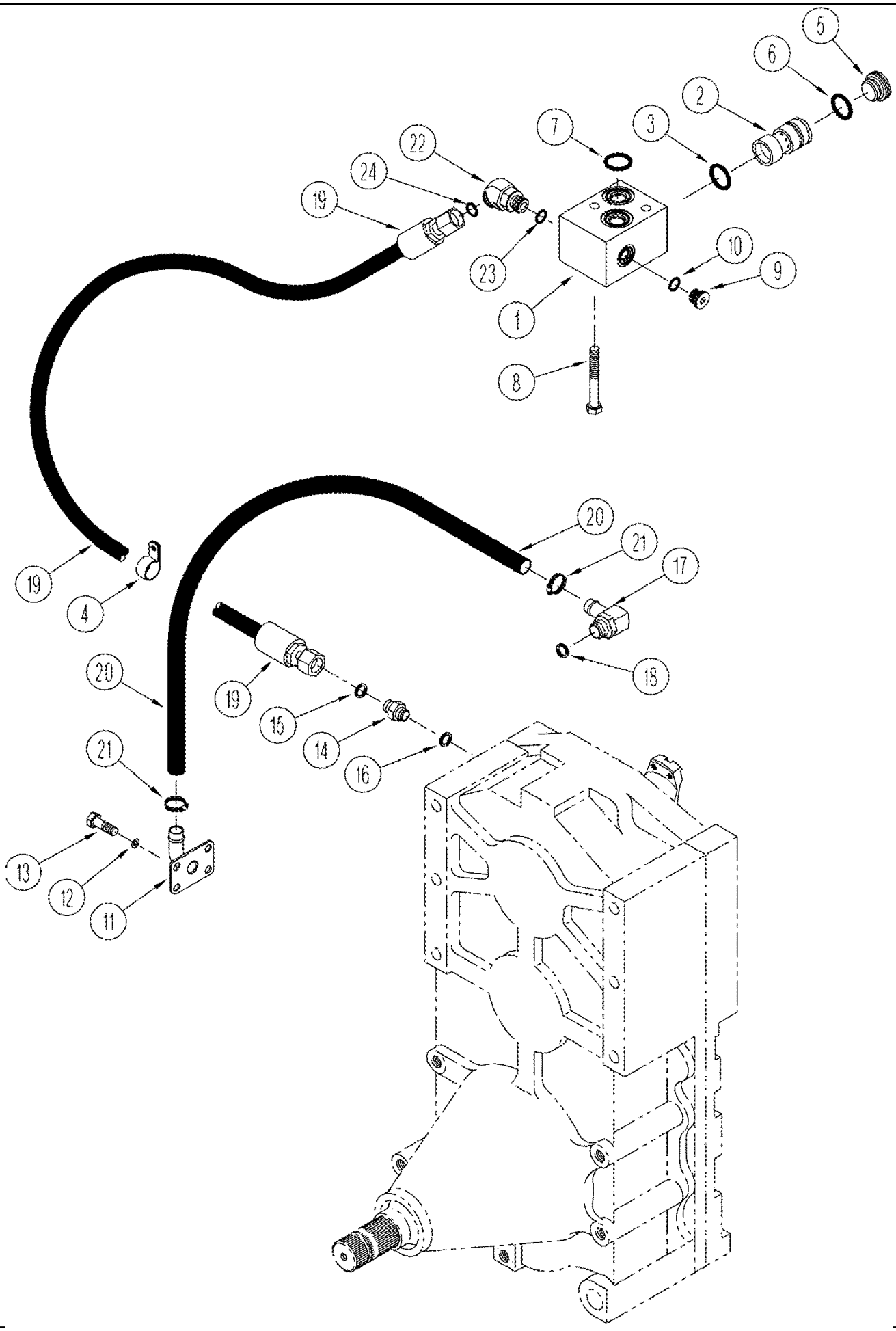

TJ375 TRACTOR - Power Train

06 -37 POWER TAKEOFF LUBRICATION TJ375 HD, TJ425 , TJ450, BSN RVS001801

ссылка	Номер детали	Кол-во	Описание
1	370157A1	1	BODY, Jet Pump
2	347294A3	1	PUMP,
3	9861410	1	O-RING, -017, 90 Duro, .676" ID x .070" Thk,
4	86598598	1	CLAMP, 3/4", Insul, 1/2" Bolt, 3/4 ID
5	221580A1	1	PLUG, Hex Soc, M27 x 2, ORB, Includes 6
6	86639045	1	O-RING, Cl 6, 23.6MM ID x 2.9 Thk, 23,6 ID x 2,9
7	86639048	2	O-RING, Cl 5, 30MM ID x 2.65 Thk, M30 ID x 2,65; 5
8	43252	2	BOLT, Hex, M10 x 80, 10.9, Cap, HH, CL 10.9, M10 x 1.5 x 80
9	221578A1	1	PLUG, Hex Soc, M18 x 1.5, ORB, Includes 10
10	86639043	1	O-RING, 15,3 ID x 2,2
11	416087A1	1	TUBE, Flange
12	86624176	4	WASHER, M10 x 20 x 2, M10
13	9846677	4	BOLT, Hex, M10 x 25, 10.9, Full Thd, Cap, HH, CL 10.9, M10 x 1.5 x 25
14	86579676	1	CONNECTOR, HYD., 13/16"-16 ORFS x M18 x 1.5 ORB, 13/16 fc sl x 18 Or, Inc. 15, 16
16	86639043	1	O-RING, 15,3 ID x 2,2
17	370246A1	1	ELBOW, 90, M33 orb x 2,0, Inc. 18
18	86639046	1	O-RING, Cl 6, 29.6MM ID x 2.9 Thk, 29,6 ID x 2,9
19	360198A2	1	HOSE ASSY., 1720 mm (67 in)
20	435463A1	1	HOSE, 1430 mm (45 in), Cut From : 443082A1
21	507586	2	CLAMP, HOSE, #20, 0.81/1.75 Type F Worm, No. 20
22	86639055	1	ELBOW, 45є, 1 3/16"-12 ORFS x M27 x 2 ORB, 45, 13/16 fc sl x 18 Or, Inc. 23, 24
23	86639043	1	O-RING, 15,3 ID x 2,2
15	9992298	1	O-RING, -014, 90 Duro, .489" ID x .070" Thk,
24	9992298	1	O-RING, -014, 90 Duro, .489" ID x .070" Thk,

06 -37(01) POWER TAKEOFF LUBRICATION TJ375 HD, TJ425, TJ450, ASN RVS001801

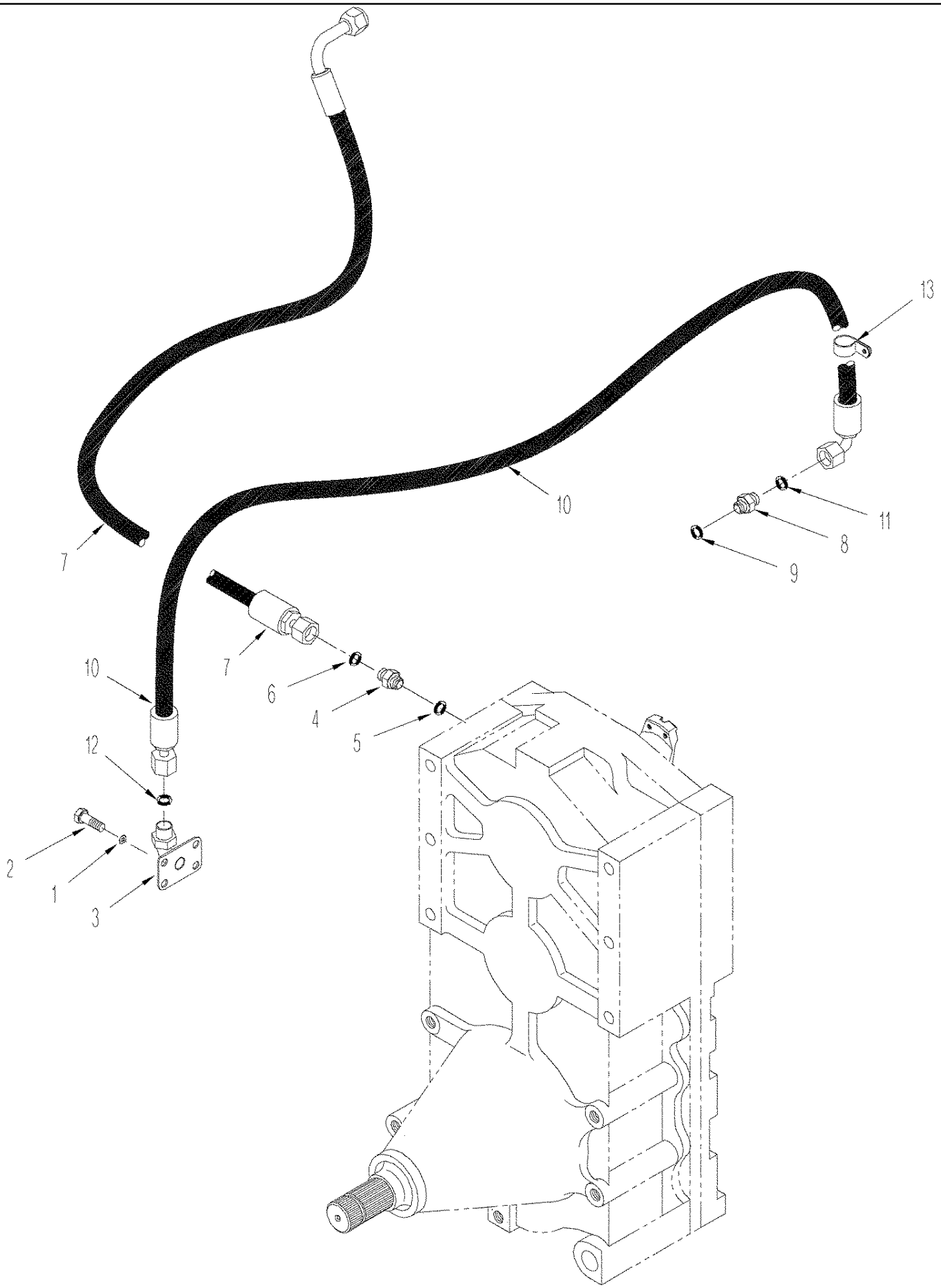

06 -37(01) POWER TAKEOFF LUBRICATION TJ375 HD, TJ425, TJ450, ASN RVS001801

ссылка	Номер детали	Кол-во	Описание
1	86624176	4	WASHER, M10 x 20 x 2,
2	9846677	4	BOLT, Hex, M10 x 25, 10.9, Full Thd, Cap, HH, CL 10.9, M10 x 1.5 x 25
3	86992408	1	FITTING, Flange
4	86579676	3	CONNECTOR, HYD., 13/16"-16 ORFS x M18 x 1.5 ORB, 13/16 fc sl x 18 Or, Inc. 14, 15
5	86639043	1	O-RING, 15,3 ID x 2,2
6	9992298	1	O-RING, -014, 90 Duro, .489" ID x .070" Thk,
7	86994525	1	HOSE ASSY., 3251 mm (128 in)
8	86579680	1	CONNECTOR, HYD., 1"-14 ORFS x M22 x 1.5 ORB, Includes 9, 11
9	86642449	1	O-RING, Cl 6, 13.3MM ID x 2.2 Thk, 13,3 ID x 2,2 thk
10	87400234	1	HOSE ASSY., 1803 mm (71 in)
11	9992069	2	O-RING, -016, 90 Duro, .614" ID x .070" Thk,
12	9992298	1	O-RING, -014, 90 Duro, .489" ID x .070" Thk,
13	619284	1	CLAMP, 15/16", Insul, 3/8" Bolt,

06 -39 COUPLER MOUNTS WITHOUT POWER TAKEOFF AND THREE POINT HITCH

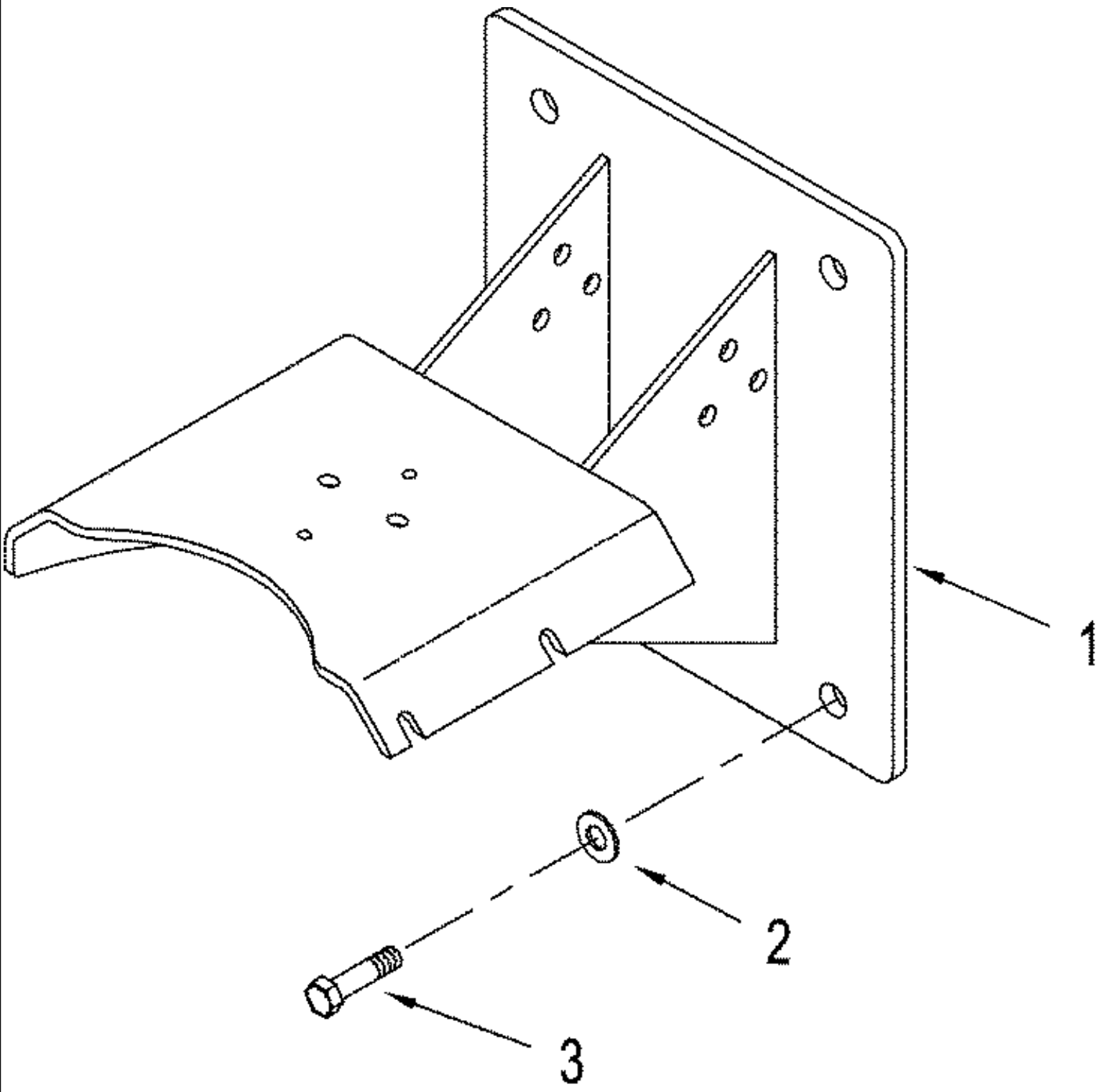

TJ375 TRACTOR - Power Train

06 -39 COUPLER MOUNTS WITHOUT POWER TAKEOFF AND THREE POINT HITCH

ссылка	Номер детали	Кол-во	Описание
1	87311759	1	MOUNTING PARTS, Auxiliary Valve
2	86625260	4	WASHER, M20 x 37.5 x 4, HT, 22 x 37 x 4 mm
3	9843612	4	BOLT, Hex, M20 x 100, 10.9, Cap, HH, CL 10.9, M20 x 2.5 x 100

06 -40 POWER TAKEOFF SAFETY SHEILDS

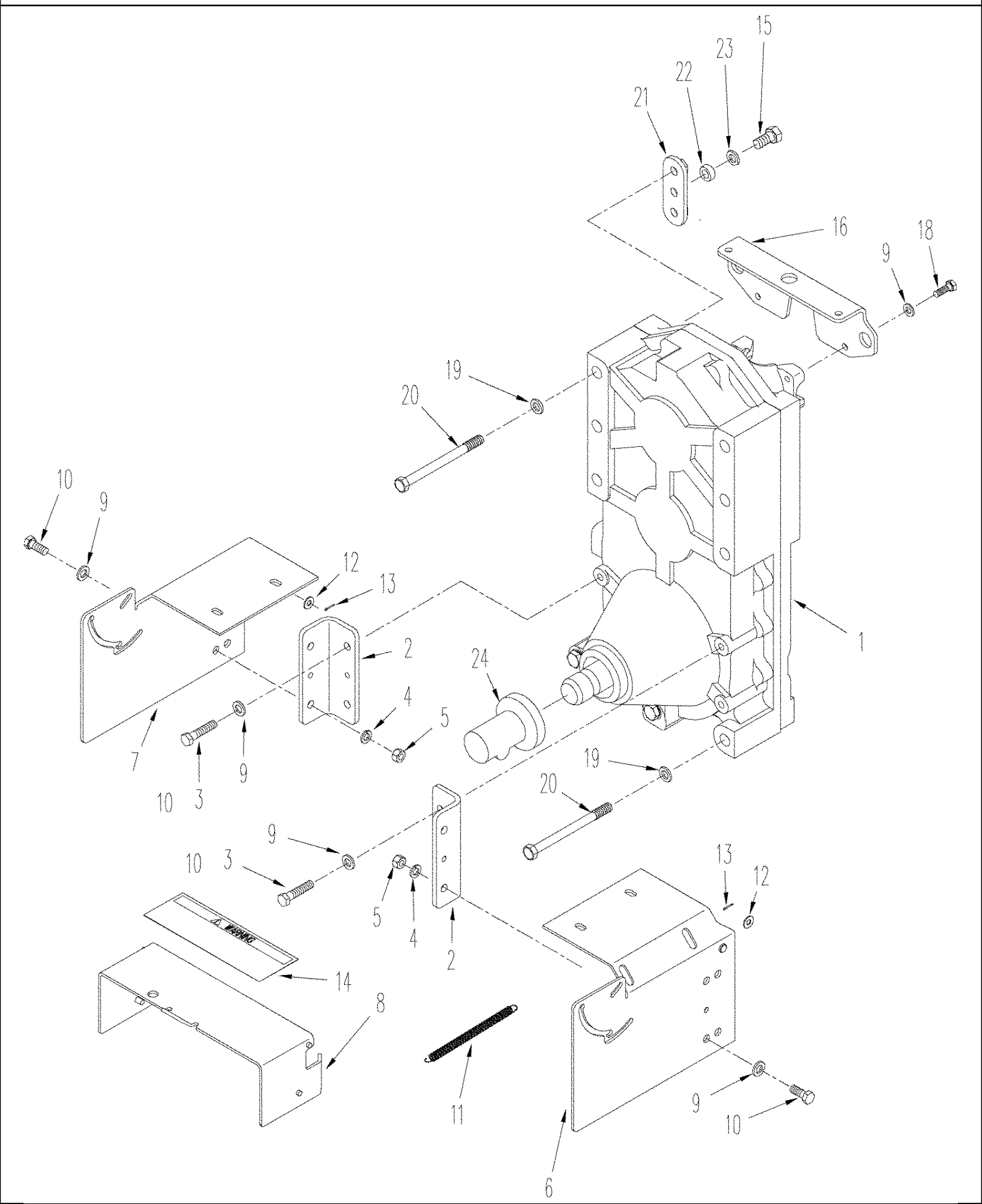

TJ375 TRACTOR - Power Train

06 -40 POWER TAKEOFF SAFETY SHEILDS

ссылка	Номер детали	Кол-во	Описание
1	403073A1	1	GEARBOX ASSY, Transfer, See Figure(s) : 06-41
2	405394A1	2	BRACE,
3	9503185	4	BOLT, Hex, M12 x 55, 10.9, M12 x 55; 10.9, With Three Point Hitch
4	412123	4	WASHER, LOCK, M12,
5	337475	4	NUT, M12, Cl 10,
6	405396A1	1	COVER, RH
7	405395A1	1	COVER, LH
8	405397A1	1	SHIELD, Flip-up
9	86625255	10	WASHER, M13.5 x 24.5 x 3, HT,
10	43260	6	BOLT, Hex, M12 x 30, 10.9, , With Three Point Hitch
10	43260	10	BOLT, Hex, M12 x 30, 10.9, , Without Three Point Hitch
11	365853A1	2	SPRING,
12	86625263	2	WASHER, M8 x 20 x 1.6,
13	86639115	2	PIN, SPLIT (COTTER), M2 x 12, Cotter, M2 x 12
14	327567A3	1	DECAL, Safety, See Figure(s) : 09-58
15	86639032	2	BOLT, Hex, M16 x 25, 10.9, Full Thd, Hex, M16 x 25, 10.9, Full Thd
16	381389A2	1	BRACKET,
17	86625252	2	WASHER, M10 x 21.5 x 2.5, HT, 11 x 21 x 2.5 mm
18	9515003	2	BOLT, Hex, M10 x 30, 10.9, Full Thd,
19	86625260	4	WASHER, M20 x 37.5 x 4, HT, 22 x 37 x 4 mm
20	86624993	4	BOLT, Hex, M20 x 190, 10.9, M20 x 190; 10.9
21	259389A1	2	PLATE,
22	435501A1	2	SPACER,
23	86625266	2	WASHER, M17.5 x 30 x 4, HT,
24	383716A1	1	SHIELD, Shaft, PTO

06 -41 POWER TAKEOFF TRANSFER CASE ASSEMBLY

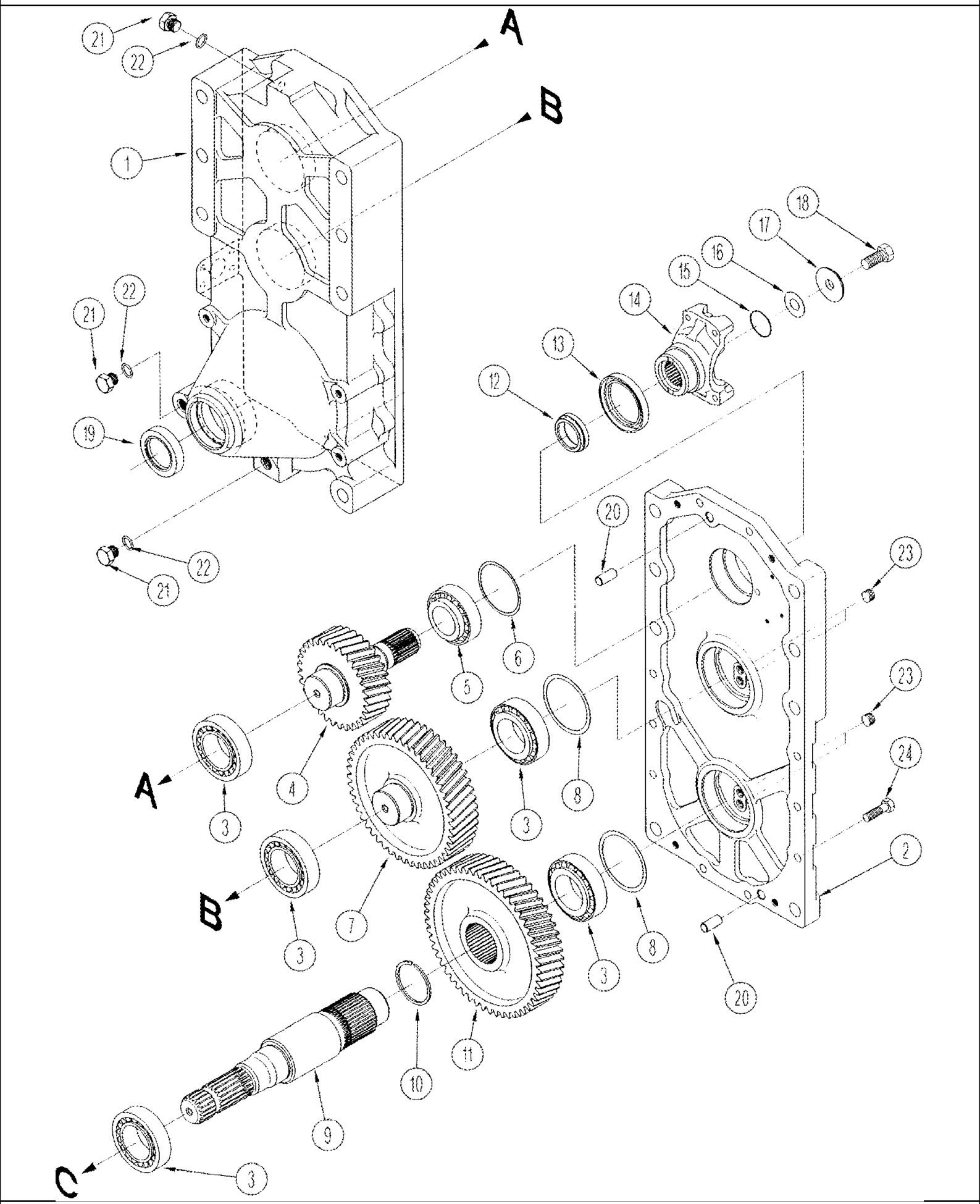

06 -41 POWER TAKEOFF TRANSFER CASE ASSEMBLY

ссылка	Номер детали	Кол-во	Описание
	403073A1	1	GEARBOX ASSY, Transfer, Inc. 1 - 24
1	375500A1	1	HOUSING, Rear
2	375501A1	1	HOUSING, Front
3	428183A1	5	BEARING,
4	375502A1	1	GEAR, Input
5	375503A1	1	BEARING,
6	375504A1	AR	SHIM,
6	375505A1	AR	SHIM,
6	375506A1	AR	SHIM,
6	375507A1	AR	SHIM,
7	375508A1	1	GEAR, Idler
8	428665A1	AR	SHIM, 0,10 mm (0,004 in)
8	428666A1	AR	SHIM, 0,30 mm (0,012 in)
8	428667A1	AR	SHIM, 0,50 mm (0,020 in)
8	428668A1	AR	SHIM, 0,70 mm (0,027 in)
8	428669A1	AR	SHIM, 0,15 mm (0,006 in)
9	375509A1	1	SHAFT, Output
10	S2240S00F	1	SNAP RING, Retaining
11	375510A1	1	GEAR, Output
12	375511A1	1	SPACER,
13	S8820S00F	1	SEAL, OIL,
14	398447A1	1	YOKE,
15	375512A1	1	O-RING,
16	S9950S00F	AR	SHIM, 0,10 mm (0,004 in)
16	S9960S00F	AR	SHIM, 0,30 mm (0,012 in)
16	S9970S00F	AR	SHIM, 0,51 mm (0,020 in)
16	S9980S00F	AR	SHIM, 0,71 mm (0,027 in)
17	S8860S00F	1	WASHER, THRUST,
18	86637960	1	BOLT, Hex, M16 x 1.5 x 35, 10.9, Full Thd, Hex, M16 x 1.5 x 35, 10.9, Full Thd
19	375514A1	1	SEAL, OIL,
20	427530A1	2	DOWEL, Dowel
21	86589753	3	PLUG, M18 x 15, Inc. 22
22	86639043	3	O-RING, 15.3 ID x 2.2
23	375515A1	4	PLUG,
24	86637969	10	BOLT, Hex, M12 x 1.25 x 25, 8.8, Full Thd, M12 x 40

06 -42 POWER TAKEOFF CLUTCH ASSEMBLY

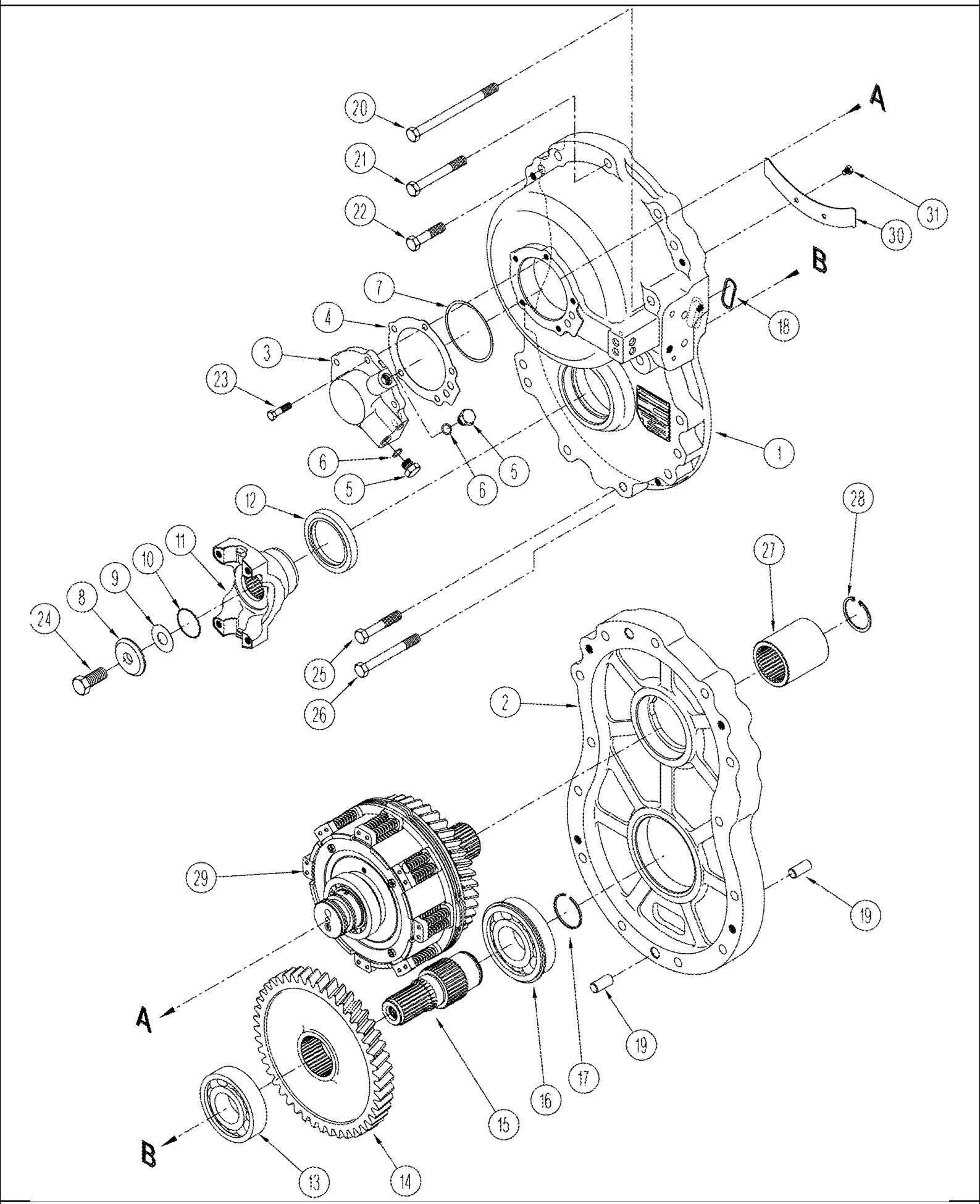

06 -42 POWER TAKEOFF CLUTCH ASSEMBLY

ссылка	Номер детали	Кол-во	Описание
1	375550A1	1	HOUSING,
2	375551A1	1	HOUSING,
3	375552A1	1	HOUSING,
4	375553A1	1	GASKET, Housing
5	220064A1	9	PLUG, M14 x 1.5, ORB, M14 - 1,5, Inc. 6
6	86639042	9	O-RING, Cl 6, 11.3MM ID x 2.2 Thk, 11.3 ID x 2.2
7	S9910S00F	AR	SHIM, 0,10 mm (0,004 in)
7	S9920S00F	AR	SHIM, 0,30 mm (0,012 in)
7	S9930S00F	AR	SHIM, 0,50 mm (0,020 in)
7	S9940S00F	AR	SHIM, 0,70 mm (0,027 in)
8	S8860S00F	1	WASHER, THRUST,
9	S9950S00F	AR	SHIM, 0,10 mm (0,004 in)
9	S9960S00F	AR	SHIM, 0,30 mm (0,012 in)
9	S9970S00F	AR	SHIM, 0,51 mm (0,020 in)
9	S9980S00F	AR	SHIM, 0,71 mm (0,027 in)
10	375512A1	1	O-RING,
11	398447A1	1	YOKE,
12	S8820S00F	1	SEAL, OIL,
13	ST293	1	BEARING, BALL,
14	375554A1	1	GEAR, Driven
15	375555A1	1	SHAFT, Output
16	375559A1	1	BEARING, BALL, Roller
17	375560A1	1	SNAP RING, Snap
18	375556A1	1	GASKET, Cover
19	427530A1	4	DOWEL,
20	SM8124208	2	BOLT,
21	86642436	4	SCREW, M12 x 1,5; 8.8
22	86642440	2	BOLT, M12 x 1,25; 8.8
23	43128	5	BOLT, Hex, M8 x 30, 8.8,
24	86637960	1	BOLT, Hex, M16 x 1.5 x 35, 10.9, Full Thd, Hex, M16 x 1.5 x 35, 10.9, Full Thd
25	86642437	2	BOLT, M12 x 1,25; 8.8
26	86642439	7	BOLT, M12 x 1,25; 8.8
27	428660A1	1	SLEEVE, , Used on Power Shift Models
28	300647	1	RING, SNAP, M47, Int, Int, M47, Used on Power Shift Models
29	NSS	1	NOT SERVICED SEPARATELY, 7, Input, See Figure(s) : 06-43
30	376972A1	1	TROUGH,
31	86977726	2	BOLT, Hex, M6 x 12, 8.8,

06 -43 POWER TAKEOFF INPUT SHAFT ASSEMBLY

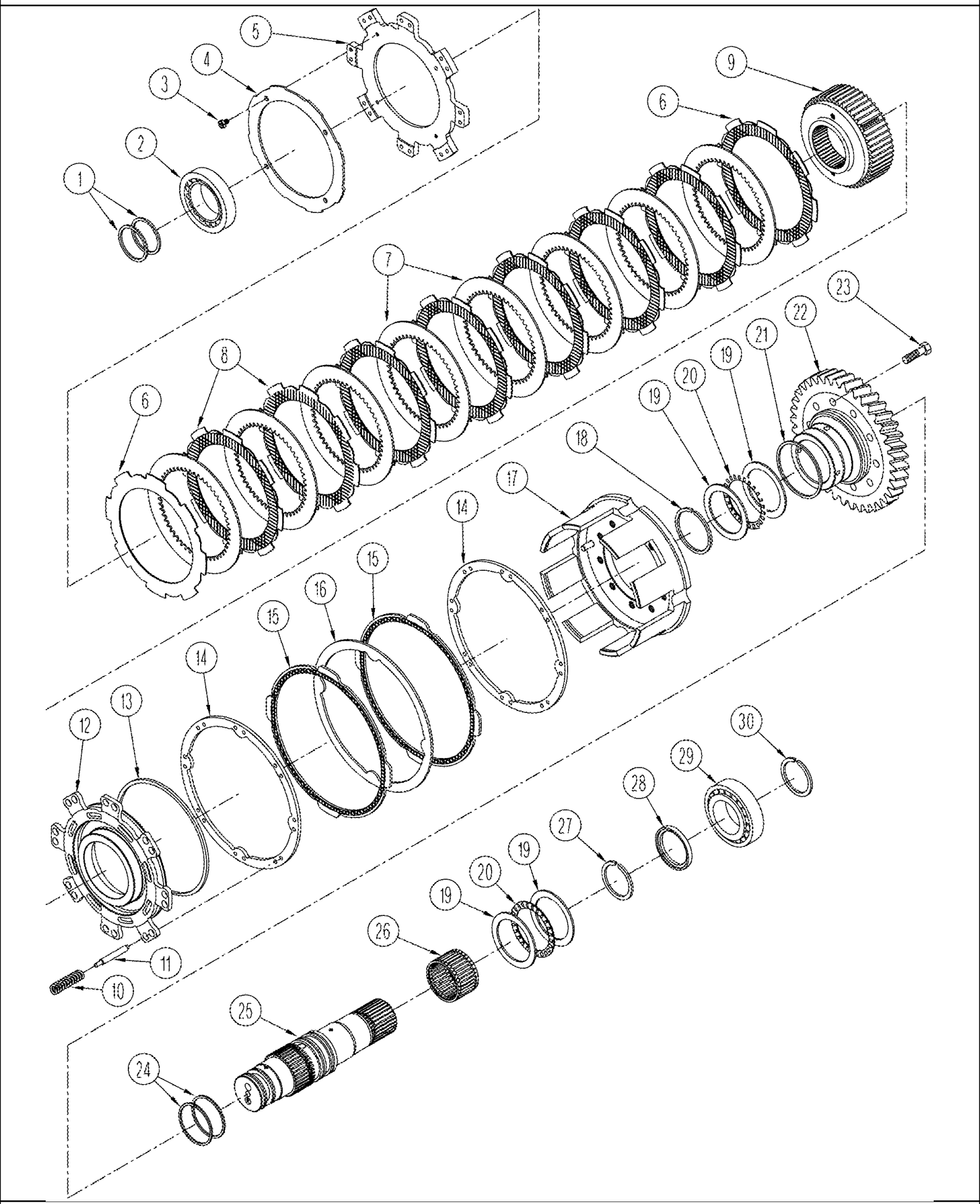

06 -43 POWER TAKEOFF INPUT SHAFT ASSEMBLY

ссылка	Номер детали	Кол-во	Описание
1	S3070S00F	2	RING, Seal
2	S8730S00F	1	BEARING, ROLLER,
3	375523A1	4	BOLT,
4	375525A1	1	PLATE,
5	375527A1	1	PLATE,
6	375528A1	2	DISC, CLUTCH, Face, 7
7	S2080S00F	8	DISC, CLUTCH, 2,4 mm
8	375529A1	7	DISC, CLUTCH, Face, 7
9	375530A1	1	HUB,
10	375531A1	16	SPRING, COIL, Brake Return
11	375532A1	16	PIN,
12	375533A1	1	PISTON,
13	352834A1	1	RING, Seal
14	375534A1	2	PLATE, BRAKE, Steel Brake
15	375535A1	2	PLATE, BRAKE, Brake Face
16	375536A1	1	PLATE, BRAKE, Steel Brake
17	375538A1	1	DRUM,
18	S2240S00F	1	SNAP RING, Retaining
19	S2220S00F	4	WASHER, THRUST, 2,4 mm
20	572182R1	2	BEARING, THRUST,
21	S5510S00F	1	RING,
22	375540A1	1	PINION,
23	86637966	10	BOLT, Hex, M10 x 1.25 x 35, 8.8, Full Thd, M10 x 35
24	375541A1	2	RETAINER, SEAL, Seal
25	375542A1	1	SHAFT, Input
26	375543A1	1	BEARING,
27	375544A1	1	RING, SNAP, Retaining
28	375545A1	1	WASHER,
29	375546A1	1	BEARING, CUP,
29	186621A1	1	BEARING, CONE,
30	375547A1	AR	RING, SNAP, Retaining
30	375548A1	AR	RING, SNAP, Retaining
30	375544A1	AR	RING, SNAP, Retaining

06 -44 AXLE MOUNTING

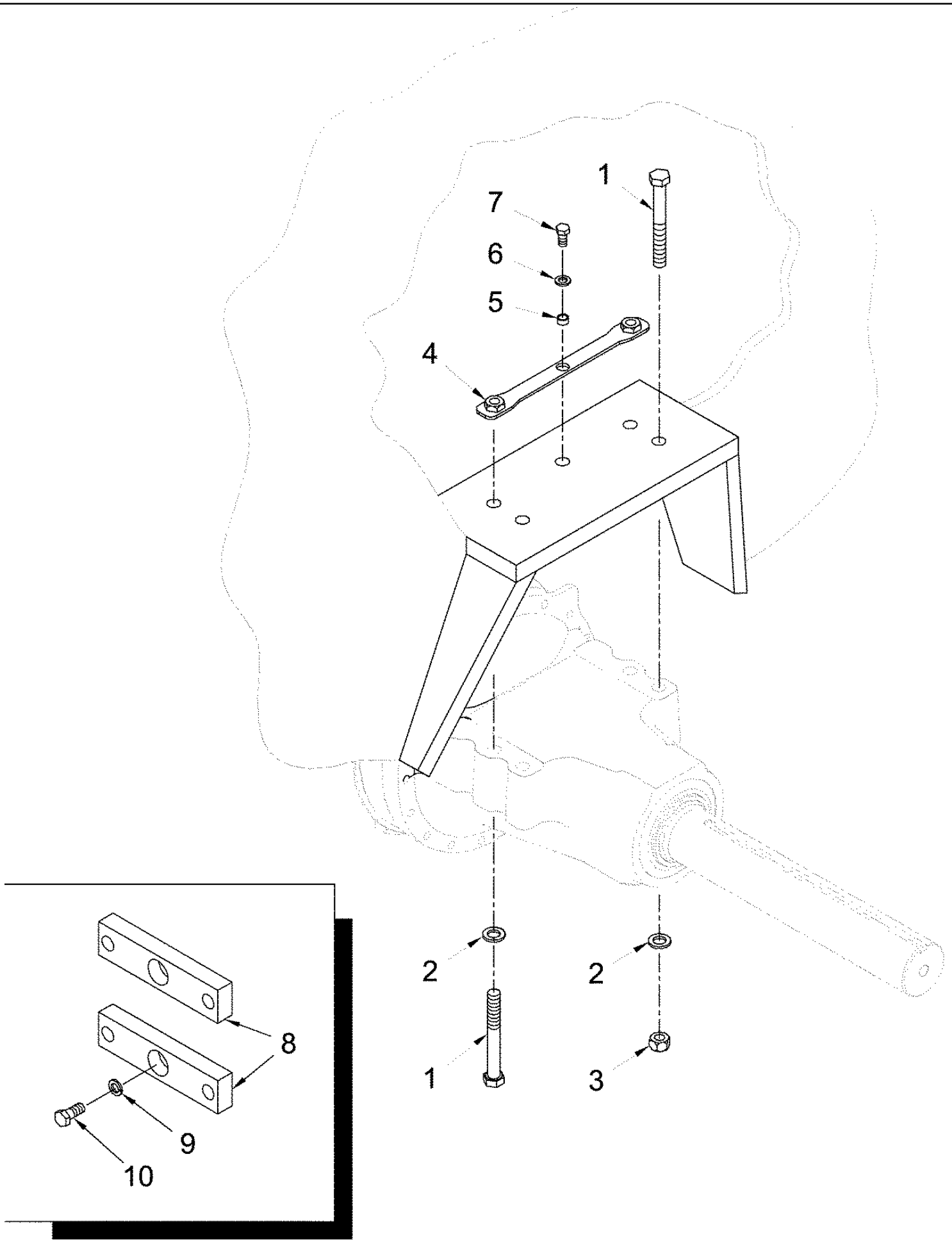

TJ375 TRACTOR - Power Train

06 -44 AXLE MOUNTING

ссылка	Номер детали	Кол-во	Описание
1	86528190	1	BOLT, Hex, M24 x 200, 10.9, M24 x 200; 10.9, TJ375, TJ425 Manual Shift Transmission
1	86639187	1	BOLT, Hex, M24 x 270, 10.9, M24 x 270; 10.9, TJ425 Manual Shift Transmission, TJ375 Heavy Duty, TJ450
2	86639319	8	WASHER, 26 x 44 x 5 mm
3	9848973	AR	NUT, M24, Cl 10, CL 10, M24 x 3.0, (4) Rear Axle and (8) Front Axle
4	296050A1	2	PLATE, Mounting, Rear Axle
5	435501A1	2	SPACER,
6	86625266	2	WASHER, M17.5 x 30 x 4, HT,
7	86508623	2	BOLT, Hex, M16 x 30, 10.9, Full Thd, Hex, M16 x 30, 10.9, Full Thd
8	316659A1	2	PLATE, SPACER, Rear Axle, TJ425 Manual Shift Transmission, TJ375
9	86642462	2	WASHER, LOCK, M20, M20, Rear Axle, TJ375, TJ425 Manual Shift Transmission
10	43260	2	BOLT, Hex, M12 x 30, 10.9, Rear Axle, TJ425 Manual Shift Transmission, TJ375

06 -45 AXLE ASSY - FRONT COVER (TJ375, TJ425)

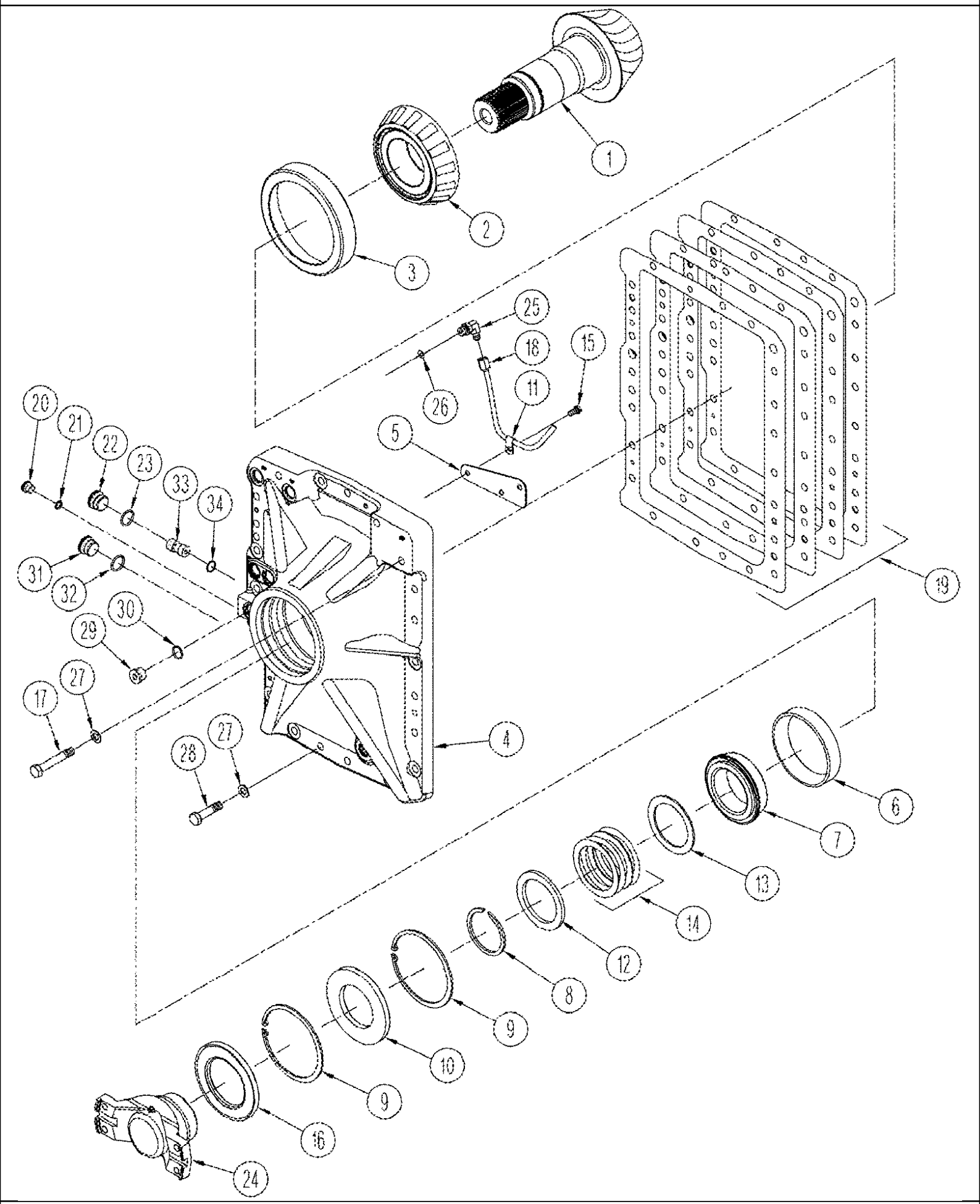

06 -45 AXLE ASSY - FRONT COVER (TJ375, TJ425)

ссылка	Номер детали	Кол-во	Описание
	302259A2	1	GEAR SET, Set, Pinion Shaft And Gears, Inc. 1, See Figure(s) : 06-48 - 06-49
1	NSS	1	NOT SERVICED SEPARATELY, 12 T / 53 T, Shaft, Pinion
2	248118A1	1	BEARING, CONE,
3	248114A1	1	BEARING SET,
4	328429A3	1	COVER, , BSN RVS001801
4	86985627	1	COVER, , ASN RVS001801
5	246146A1	1	BAFFLE,
6	191440A1	1	BEARING, CUP, Cup
7	67190R91	1	BEARING, CONE, Cone
8	229515A1	1	SNAP RING, Retaining, M4
9	86534066	2	RING, SNAP, 5.50", Int, #550,
10	259516A1	1	SEAL, Oil
11	853764	1	CLAMP, 5/16", Insul, 5/16" Bolt,
12	228968A2	1	SPACER, Thick
13	191713A1	1	SPACER, Thin
14	191709A1	AR	SHIM, 0,076 mm
14	191711A1	AR	SHIM, 0,101 mm
14	191712A1	AR	SHIM, 0,130 mm
14	220785A1	AR	SHIM, 0,508 mm
15	43232	4	SCREW, M8 x 16; 10.9
16	284186A1	1	SEAL,
17	412085	8	BOLT, Hex, M12 x 80, 10.9,
18	234433A1	1	TUBE, Lubrication
19	226492A2	AR	SHIM, 0,076 mm
19	226493A2	AR	SHIM, 0,101 mm
19	226494A2	AR	SHIM, 0,130 mm
19	226496A2	AR	SHIM, 0,508 mm
20	221573A1	1	PLUG, Hex Soc, M12 x 1.5, ORB, Includes 21
21	86642448	1	O-RING, Cl 6, 9.3MM ID x 2.2 Thk,
22	221580A1	1	PLUG, Hex Soc, M27 x 2, ORB, Includes 23, BSN RVS001801
22	221579A1	1	PLUG, Hex Soc, M22 x 1.5, ORB, Includes 23, ASN RVS001801
23	86639045	1	O-RING, Cl 6, 23.6MM ID x 2.9 Thk, , BSN RVS001801
23	637-63193	1	O-RING, Cl 6, 19.3MM ID x 2.2 Thk, , ASN RVS001801
24	395209A1	1	YOKE,
25	86637732	1	ELBOW, 90є, 1/2"-20, 37є x 9/16"-18, O-Ring, Inc. 26, BSN RVS001801
25	86985636	1	ELBOW, Inc. 76, ASN RVS001801
26	9617873	1	O-RING, 6-1, 90 Duro, .468" ID x .078" Thk,
27	86639321	22	WASHER, 13.5 x 24 x 3 mm
28	412087	14	BOLT, Hex, M12 x 45, 10.9, Full Thd,
29	86625138	1	PLUG, Hex Soc, 7/8"-14 ORB, Includes 30
30	167269	1	O-RING, 10-1, 90 Duro, .755" ID x .097" Thk,
31	221576A1	1	PLUG, Hex Soc, M14 x 1.5, ORB, Includes 32
32	86639042	1	O-RING, Cl 6, 11.3MM ID x 2.2 Thk,
33	347294A3	1	PUMP, , BSN RVS001801
34	9861410	1	O-RING, -017, 90 Duro, .676" ID x .070" Thk, , BSN RVS001801

06 -46 AXLE ASSY - REAR COVER (TJ375, TJ425)

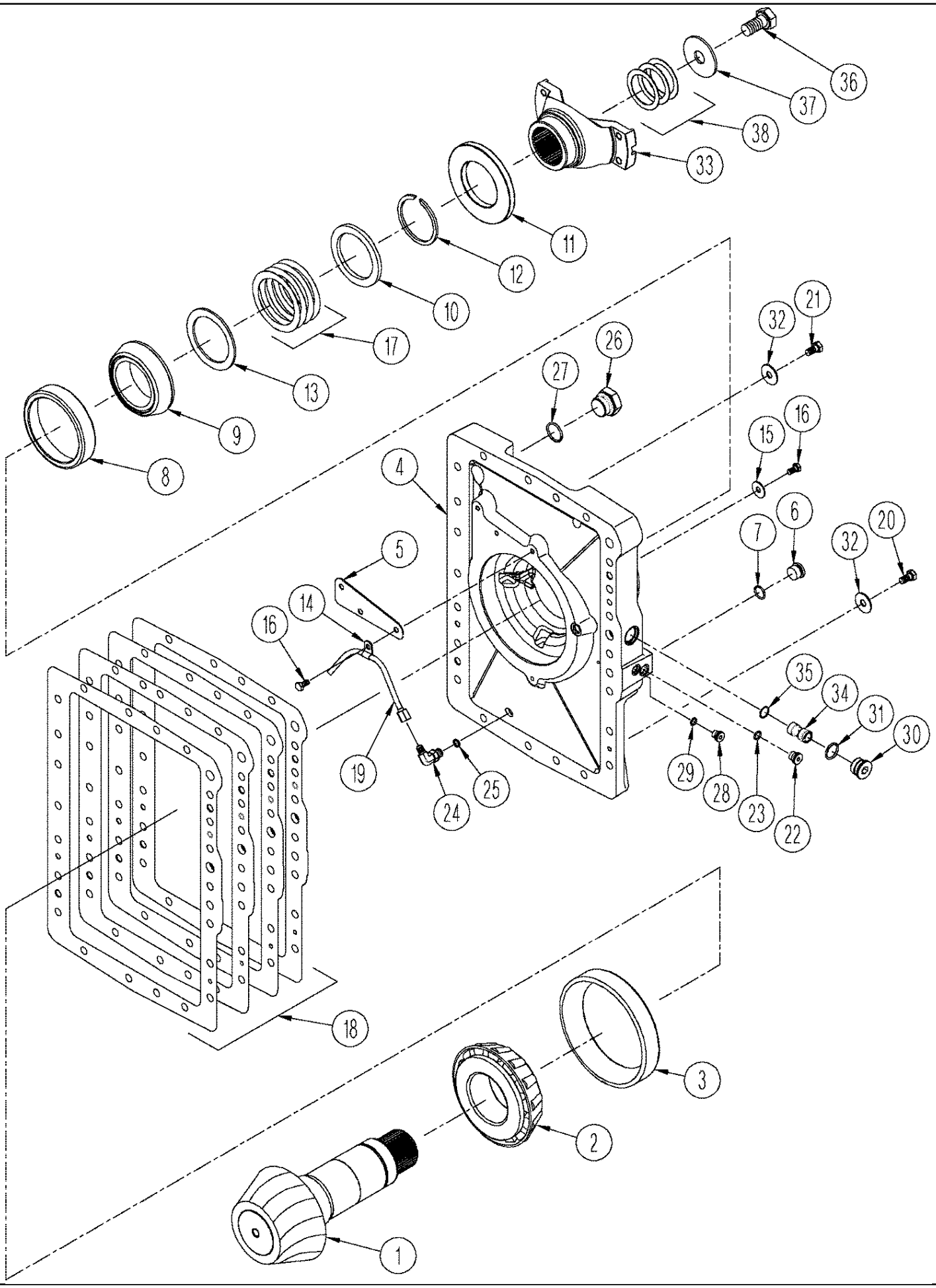

06 -46 AXLE ASSY - REAR COVER (TJ375, TJ425)

ссылка	Номер детали	Кол-во	Описание
	302260A1	1	GEAR SET, Pinion Shaft And Gears, Inc. 1, See Figure(s) : 06-48 - 06-49
1	NSS	1	NOT SERVICED SEPARATELY, Shaft, Pinion, 12 T / 53 T
2	248118A1	1	BEARING, CONE,
3	248114A1	1	BEARING SET,
4	328427A3	1	COVER, , BSN RVS001801
4	86985626	1	COVER, , ASN RVS001801
5	246146A1	1	BAFFLE,
6	86625138	1	PLUG, Hex Soc, 7/8"-14 ORB, Includes 7
7	167269	1	O-RING, 10-1, 90 Duro, .755" ID x .097" Thk,
8	191440A1	1	BEARING, CUP, Cup
9	67190R91	1	BEARING, CONE, Cone
10	229515A1	1	SNAP RING, Retaining, M4
11	87432424	1	SEAL, Oil
12	228968A2	1	SPACER, Thick
13	191713A1	1	SPACER, Thin
14	853764	1	CLAMP, 5/16", Insul, 5/16" Bolt,
15	86639333	3	WASHER, 5/16",
16	43232	6	SCREW, M8 x 16; 10.9
17	191709A1	AR	SHIM, 0,076 mm
17	191711A1	AR	SHIM, 0,101 mm
17	191712A1	AR	SHIM, 0,130 mm
17	220785A1	AR	SHIM, 0,508 mm
18	226492A2	AR	SHIM, 0,076 mm
18	226493A2	AR	SHIM, 0,101 mm
18	226494A2	AR	SHIM, 0,130 mm
18	226496A2	AR	SHIM, 0,508 mm
19	234432A1	1	TUBE, Lubrication
20	412087	14	BOLT, Hex, M12 x 45, 10.9, Full Thd,
21	412085	8	BOLT, Hex, M12 x 80, 10.9,
22	221573A1	1	PLUG, Hex Soc, M12 x 1.5, ORB, Includes 23
23	86642448	1	O-RING, Cl 6, 9.3MM ID x 2.2 Thk,
24	86637732	1	ELBOW, 90є, 1/2"-20, 37є x 9/16"-18, O-Ring, Inc. 25, BSN RVS001801
24	86985636	1	ELBOW, Orificed, 5/16 x 3/8, Inc. 25, ASN RVS001801
25	9617873	1	O-RING, 6-1, 90 Duro, .468" ID x .078" Thk,
26	220069A1	1	PLUG, M33 x 2, ORB, Inc. 27
27	86639046	1	O-RING, Cl 6, 29.6MM ID x 2.9 Thk,
28	221576A1	1	PLUG, Hex Soc, M14 x 1.5, ORB, Includes 29
29	86639042	1	O-RING, Cl 6, 11.3MM ID x 2.2 Thk,
30	221580A1	1	PLUG, Hex Soc, M27 x 2, ORB, Includes 31, BSN RVS001801
30	221579A1	1	PLUG, Hex Soc, M22 x 1.5, ORB, Includes 31, ASN RVS001801
31	86639045	1	O-RING, Cl 6, 23.6MM ID x 2.9 Thk, , BSN RVS001801
31	637-63193	1	O-RING, Cl 6, 19.3MM ID x 2.2 Thk, , ASN RVS001801
32	86639321	22	WASHER, 13,5 x 24 x 3 mm
33	395207A1	1	YOKE, 8C
34	347294A3	1	PUMP, Jet, BSN RVS001801

06 -46 AXLE ASSY - REAR COVER (TJ375, TJ425)

ссылка	Номер детали	Кол-во	Описание
35	9861410	2	O-RING, -017, 90 Duro, .676" ID x .070" Thk, , BSN RVS001801
36	9780064	1	BOLT, Hex, M24 x 110, 10.9,
37	228967A2	1	WASHER, Retaining
38	178545A1	AR	SHIM, 0,076 mm
38	178546A1	AR	SHIM, 0,101 mm
38	178547A1	AR	SHIM, 0,130 mm
38	220779A1	AR	SHIM, 0, 508 mm

06 -47 AXLE ASSY - CENTER AND LEFT-HAND CARRIER (TJ375, TJ425)

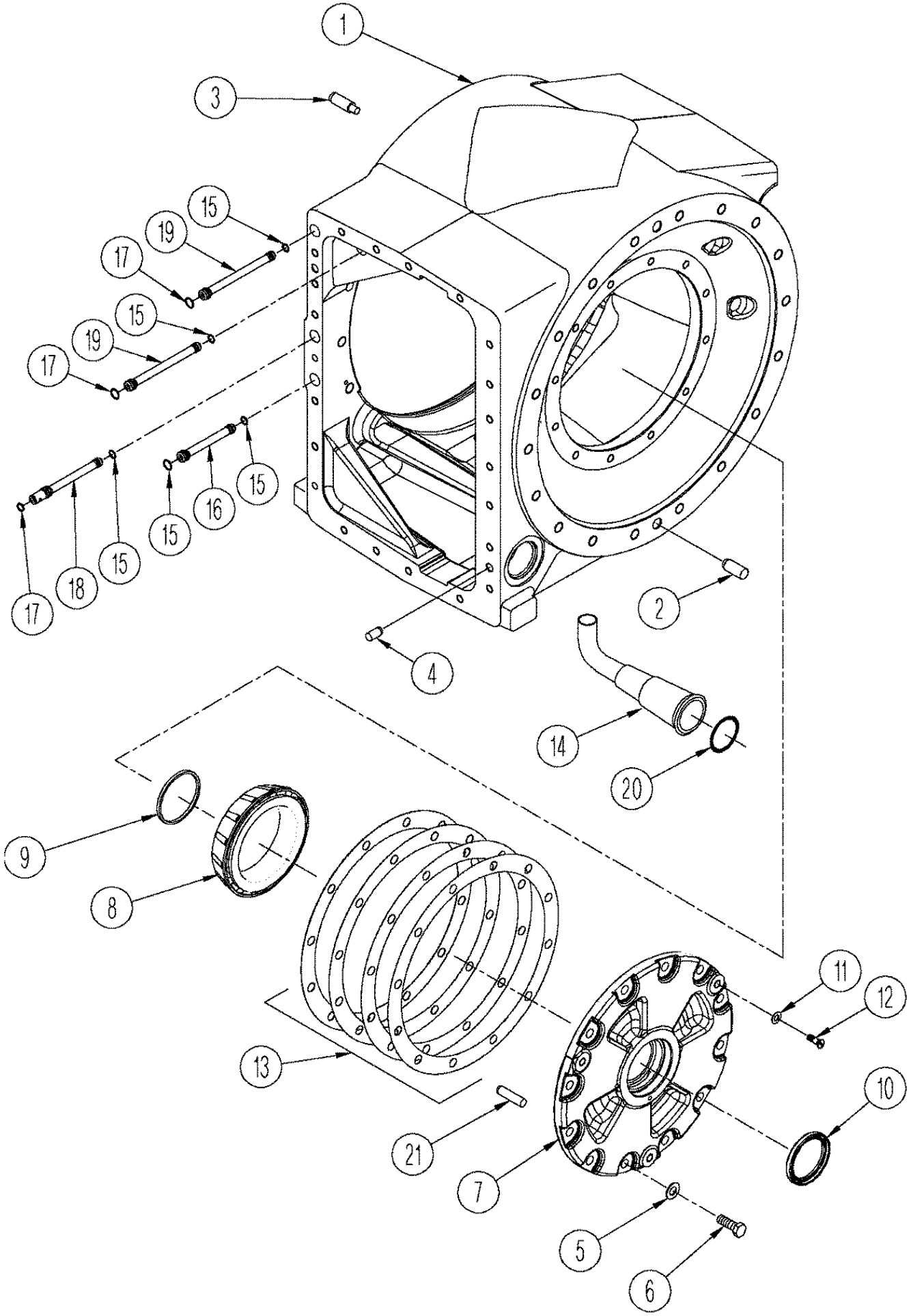

06 -47 AXLE ASSY - CENTER AND LEFT-HAND CARRIER (TJ375, TJ425)

ссылка	Номер детали	Кол-во	Описание
	388968A1	1	CARRIER ASSY., Center, Inc. 1 - 4
1	NSS	1	NOT SERVICED SEPARATELY, Carrier
2	NSS	2	NOT SERVICED SEPARATELY, Pin, Dowel
3	NSS	2	NOT SERVICED SEPARATELY, Pin, 16 x 40 mm
4	NSS	2	NOT SERVICED SEPARATELY, Pin, 12 x 25 mm
5	1251958C1	12	WASHER,
6	9824642	12	BOLT, Hex, M12 x 35, 10.9,
7	231637A2	1	CARRIER, Left-Hand
8	253932A1	1	BEARING, CONE,
9	139060C2	1	RING,
10	139059C1	1	SEAL,
11	86639334	3	WASHER, 33/64" x 7/8" x .049", 33/64 x 7/8
12	86639264	3	SCREW, Hex Flat Hd, M8 x 12, 4.8, M8 x 12; 4.8
13	255121A1	AR	SHIM, 0,076 mm
13	255122A1	AR	SHIM, 0,101 mm
13	255123A1	AR	SHIM, 0,130 mm
13	255124A1	AR	SHIM, 0,508 mm
14	229553A3	1	TUBE,
15	272217	5	O-RING, -013, 90 Duro, .426" ID x .070" Thk,
16	245162A1	1	TUBE, Jumper, Lubrication
17	165212	3	O-RING, -015, 90 Duro, .551" ID x .070" Thk, 90 Duro, .551" ID x .070" Thk
18	329808A1	1	TUBE, Jumper, Lubrication, BSN RVS001801
18	86985628	1	TUBE, Jumper, Lubricaton, ASN RVS001801
19	228893A2	2	TUBE, Service / Park Brake
20	217408	1	O-RING, -226, 70 Duro, 1.984" ID x .139" Thk, 1.984" ID x .139" Thk
21	86639250	1	DOWEL, M6 x 55, Dowel, 6 x 55 mm
22	86639247	1	DOWEL, M12 x 25, 12 x 25 mm, Not Illustrated

06 -48 AXLE ASSY - DIFFERENTIAL, WITH DIFFERENTIAL LOCKS (TJ375, TJ425)

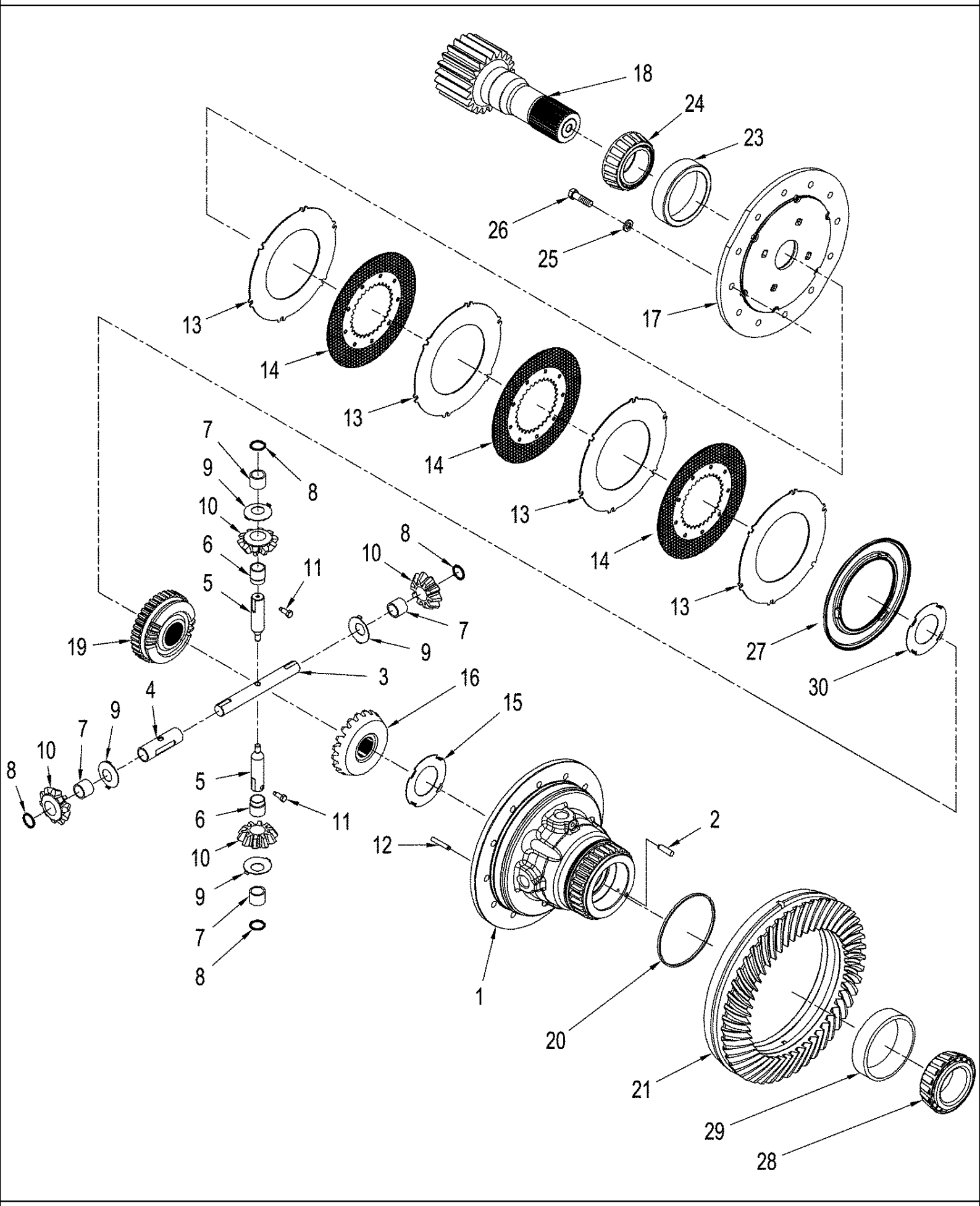

06 -48 AXLE ASSY - DIFFERENTIAL, WITH DIFFERENTIAL LOCKS (TJ375, TJ425)

ссылка	Номер детали	Кол-во	Описание
	389329A1	1	HOUSING ASSY., Differential, Inc. 1, 2
1	NSS	1	NOT SERVICED SEPARATELY, Housing
2	1342851C1	1	PLUG, 10 mm
3	92907C1	1	SHAFT, Pinion, Long
4	1289349C1	1	SPACER,
5	92906C1	2	SHAFT, SHORT, Pinion
6	1289350C1	2	SPACER,
7	1270697C1	112	NEEDLE, 28 Per Gear
8	1289348C1	4	RING, Retainer
9	92718C2	4	WASHER,
10	92905C1	4	PINION,
11	1997421C1	2	BOLT,
12	137023A1	6	DOWEL, 10 x 60 mm
13	92915C1	4	PLATE, Separator
14	120679C1	3	PLATE, Friction
15	227116A2	1	WASHER, THRUST,
16	1259633C3	1	GEAR,
17	253609A4	1	COVER,
18	310693A1	1	SHAFT, Sun Gear, Short
19	1259634C3	1	PINION, Lock
20	148939C1	1	SEAL,
	302259A2	1	GEAR SET, Pinion Shaft and Gears, Front Axle, Inc. 21, See Figure: 06-45
	302260A1	1	GEAR SET, Pinion Shaft and Gears, Rear Axle, Not Illustrated, Inc. 22, See Figure: 06-46
21	NSS	1	NOT SERVICED SEPARATELY, Gear, Drive, 53 T, Front Axle
22	NSS	1	NOT SERVICED SEPARATELY, Gear, Drive, Rear Axle, Not Illustrated
23	253931A1	1	BEARING SET,
24	253932A1	1	BEARING, CONE,
25	86625266	24	WASHER, M17.5 x 30 x 4, HT,
26	9843611	24	BOLT, Hex, M16 x 55, 10.9, Full Thd, Hex, M16 x 55, 10.9, Full Thd
27	1997422C1	1	PISTON, Brake
28	622336C1	1	BEARING, CONE,
29	A63171	1	BEARING, CUP,
30	227117A2	1	WASHER, THRUST,

06 -49 AXLE ASSY - DIFFERENTIAL, WITHOUT DIFFERENTIAL LOCKS (TJ375, TJ425)

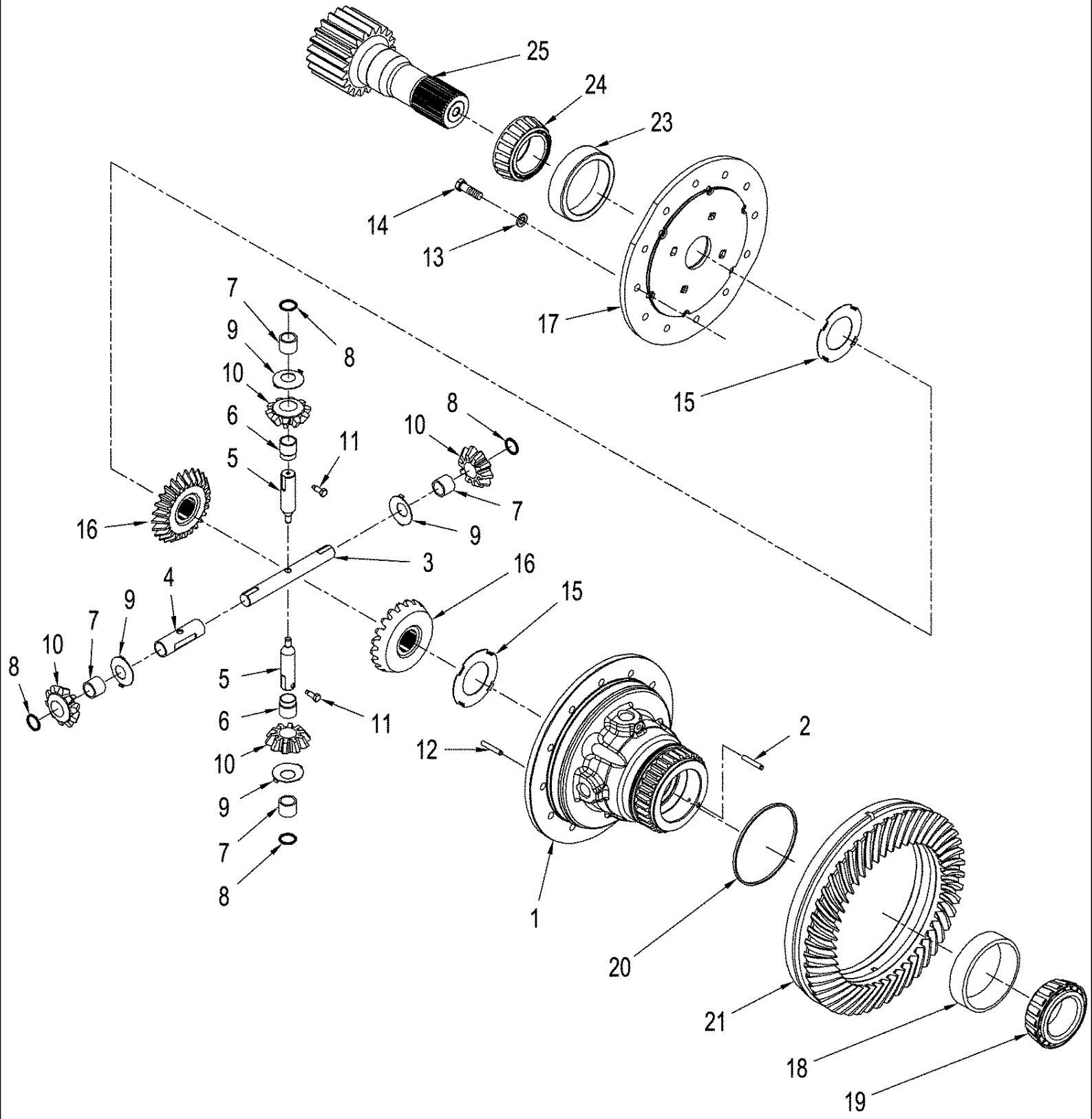

06 -49 AXLE ASSY - DIFFERENTIAL, WITHOUT DIFFERENTIAL LOCKS (TJ375, TJ425)

ссылка	Номер детали	Кол-во	Описание
	389329A1	1	HOUSING ASSY., Inc. 1 & 2
1	NSS	1	NOT SERVICED SEPARATELY, Housing
2	1342851C1	1	PLUG, 10mm
3	92907C1	1	SHAFT, Pinion, Long
4	1289349C1	1	SPACER,
5	92906C1	2	SHAFT, SHORT, Pinion, Short
6	1289350C1	2	SPACER,
7	1270697C1	112	NEEDLE, 28 Per Gear
8	1289348C1	4	RING, Retaining
9	92718C2	4	WASHER,
10	92905C1	4	PINION, Pinion
11	1997421C1	2	BOLT,
12	137023A1	6	DOWEL, 10 x 60 mm
13	86625266	24	WASHER, M17.5 x 30 x 4, HT,
14	9843611	24	BOLT, Hex, M16 x 55, 10.9, Full Thd, Hex, M16 x 55, 10.9, Full Thd
15	227116A2	2	WASHER, THRUST,
16	1259633C3	1	GEAR,
17	314226A3	1	COVER,
18	A63171	1	BEARING, CUP,
19	622336C1	1	BEARING, CONE,
20	148939C1	1	SEAL,
	302259A2	1	GEAR SET, Pinion Shaft and Gears, Front Axle, Inc. 21, See Figure(s) : 06-45
	302260A1	1	GEAR SET, Pinion Shaft and Gears, Rear Axle, Not Illustrated, Inc. 22, See Figure(s) : 06-46
21	NSS	1	NOT SERVICED SEPARATELY, Gear, Drive, 53 T, Front Axle
22	NSS	1	NOT SERVICED SEPARATELY, Gear, Drive, Rear Axle, Not Illustrated
23	253931A1	1	BEARING SET,
24	253932A1	1	BEARING, CONE,
25	310693A1	1	SHAFT, Sun Gear
26	388308A1	1	SEAL, Not Illustrated

06 -50 AXLE ASSY - BRAKE AND RIGHT-HAND CARRIER (TJ375, TJ425)

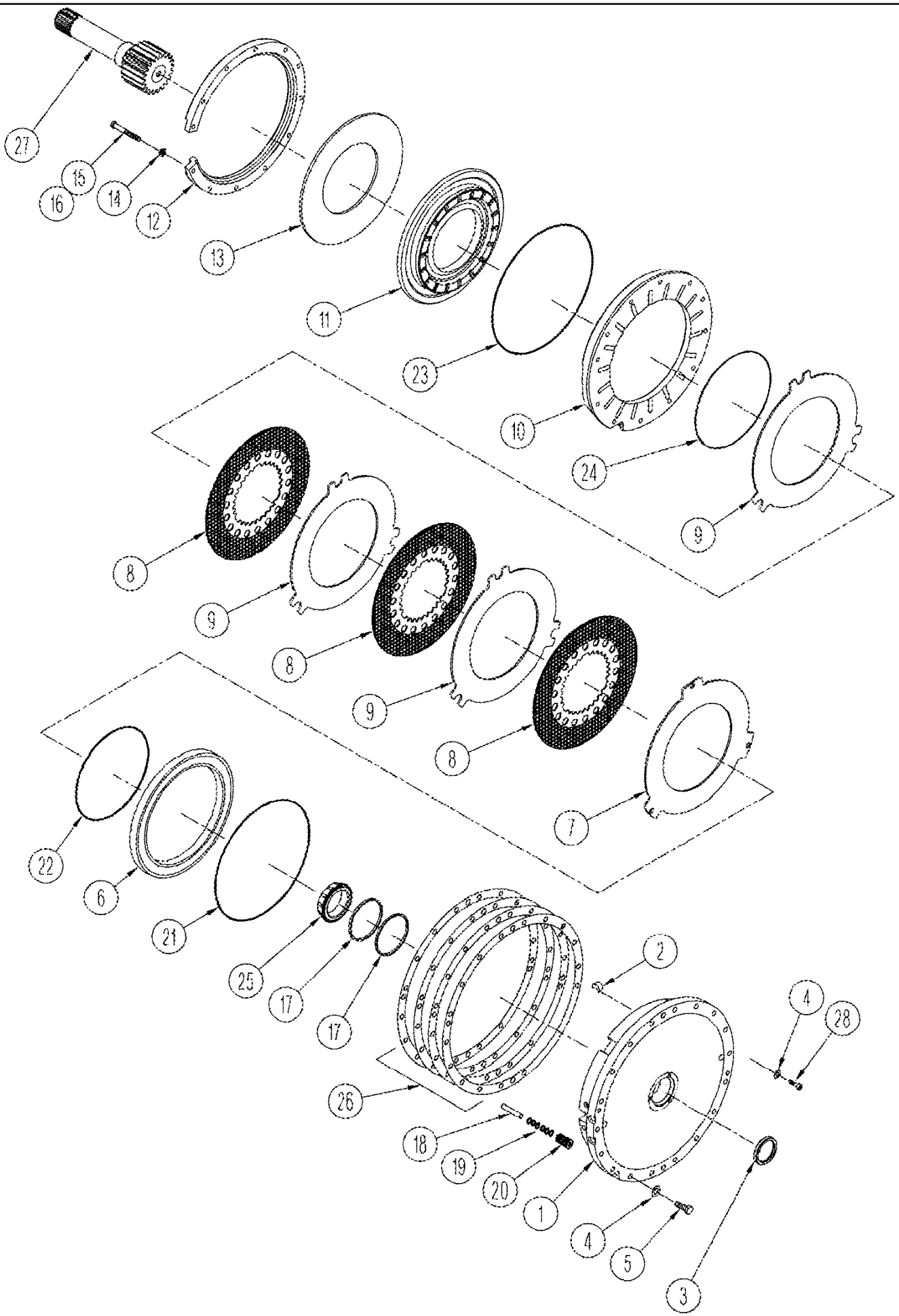

06 -50 AXLE ASSY - BRAKE AND RIGHT-HAND CARRIER (TJ375, TJ425)

ссылка	Номер детали	Кол-во	Описание
	398362A1	1	CARRIER, Brake, Inc. 1, 2
1	NSS	1	NOT SERVICED SEPARATELY, Carrier
2	NSS	1	NOT SERVICED SEPARATELY, Plug, Expansion, 12 mm
3	139059C1	1	SEAL,
4	86639323	18	WASHER, M17.5 x 30 x 4, HT, 17.5 x 30 x 4 mm
5	9840670	15	BOLT, Hex, M16 x 180, 10.9, M16 x 180; 10.9
6	178565A2	1	PISTON, Service Brake
7	228194A3	1	PLATE, Return
8	353363A1	3	PLATE, Friction
9	228193A1	3	PLATE, Separator
10	226252A2	1	PLATE, Backing
11	226318A2	1	PISTON, Park Brake
12	226254A4	1	RING, Retaining
13	226320A1	1	SPRING,
14	86639321	12	WASHER, 13,5 x 24 x 3 mm
15	412085	2	BOLT, Hex, M12 x 80, 10.9,
16	412605	10	BOLT, Hex, M12 x 90, 10.9,
17	388308A1	2	SEAL, Ring
	235507A5	3	ADJUSTER, Inc. 18 - 20
18	86637801	1	DOWEL, 1/2" x 2", Dowel, 1/2 X 2
19	86637643	6	RING, SNAP, #50, Ext, #50, Ext
20	1342928C1	9	WASHER, Thrust
21	86637768	1	O-RING, 1/8 ID x 18; 5
22	86637771	1	O-RING, -277, Cl 7, 11.484" ID x .139" Thk, 1/8 ID x 11-1/2; 7
23	86637775	1	O-RING, 1/8 ID x 16; 7
24	86637772	1	O-RING, 1/8 ID x 12; 7
25	A63171	1	BEARING, CUP,
25	622336C1	1	BEARING, CONE,
26	178553A1	AR	SHIM, 0,076 mm
26	178554A1	AR	SHIM, 0,101 mm
26	178555A1	AR	SHIM, 0,130 mm
26	198843A1	AR	SHIM, 0,508 mm
27	310692A1	1	SHAFT, Sun Gear, Long
28	390873A1	3	BOLT, SPECIAL,
29	388308A1	1	SEAL, Not Illustrated

06 -51 AXLE ASSY - FINAL DRIVE (TJ375, TJ425)

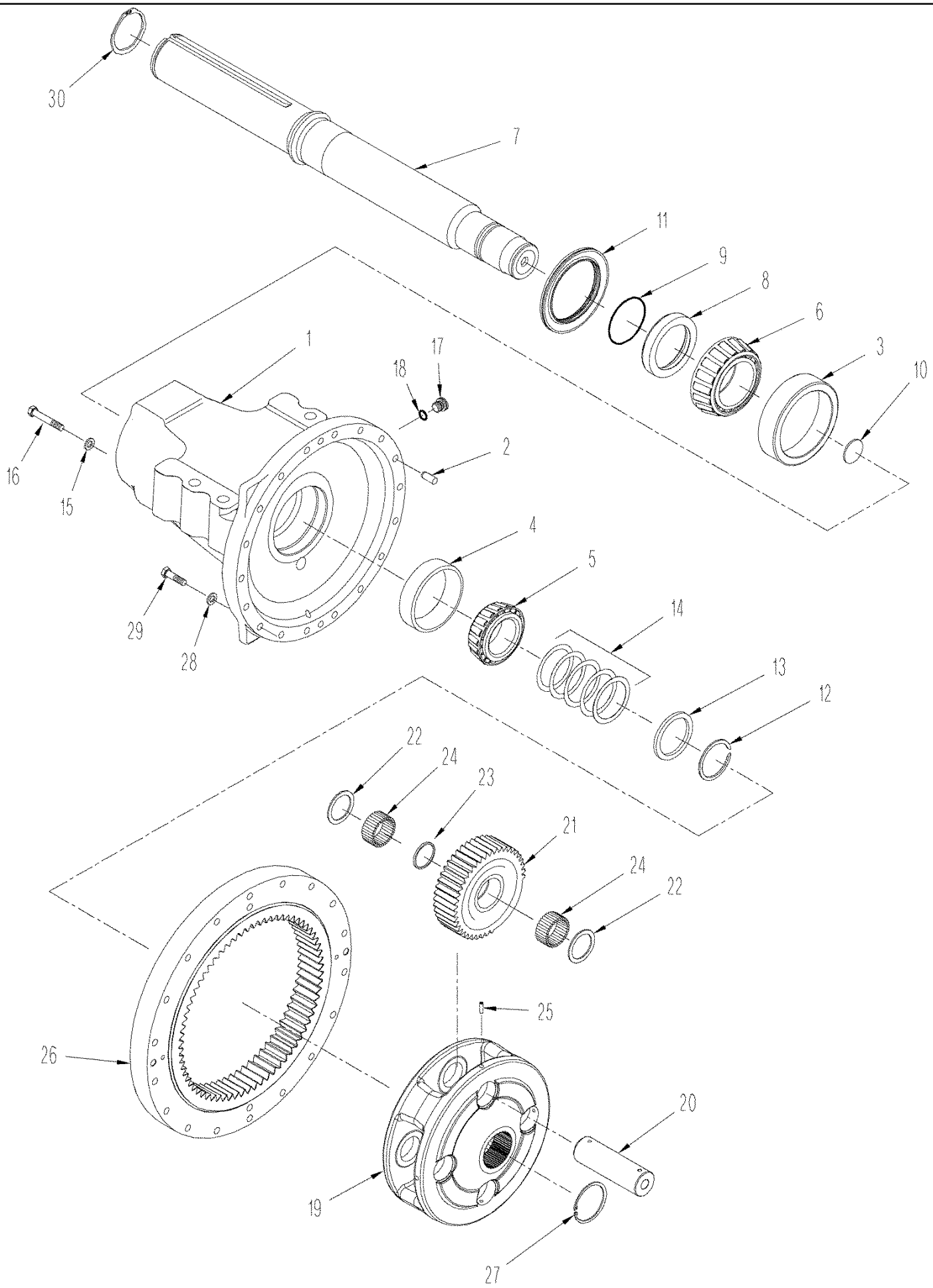

TJ375 TRACTOR - Power Train

06 -51 AXLE ASSY - FINAL DRIVE (TJ375, TJ425)

ссылка	Номер детали	Кол-во	Описание
	313600A2	1	CARRIER, Inc. 1 - 4
1	NSS	1	NOT SERVICED SEPARATELY, Housing
2	86639248	2	DOWEL, M16 x 40, 16 x 40 mm
3	237698A1	1	BEARING, CUP,
4	A136253	1	BEARING SET, Bearing, Cup
5	A136255	1	BEARING, CONE, Bearing, Cone
6	237700A1	1	BEARING, CONE,
	310701A5	2	SHAFT, 115 mm (4-1/2 in), Axle, Inc. 7 - 10
7	NSS	1	NOT SERVICED SEPARATELY, Shaft, 115 mm (4-1/2 in)
8	239529A1	1	BUSHING, Outboard
9	86637742	1	O-RING, -246, 70 Duro, 4.484" ID x .139" Thk, 4.484" ID x .139" Thk
10	1981270C1	1	INSERT,
11	239942A3	1	SEAL,
12	243856A1	1	SNAP RING, Retaining
13	124744C1	1	RING,
14	143921C1	1	SHIM, 0,76 mm
14	143922C1	1	SHIM, 0,30 mm
14	143923C1	1	SHIM, 0,13 mm
14	143924C1	1	SHIM, 0,10 mm
14	143925C1	1	SHIM, 0,076 mm
15	86639333	4	WASHER, 5/16", 3/4 x 1-1/8 x 1/16
16	43232	4	SCREW, M8 x 16; 10.9
17	221578A1	1	PLUG, Hex Soc, M18 x 1.5, ORB, Includes 18
18	86639043	1	O-RING, 15.3 ID x 2.2
19	388370A1	1	CARRIER, GEARS, Planetary
20	310697A3	4	SHAFT,
21	310694A2	4	GEAR, PLANETARY, 29 T
22	87435907	6	WASHER, Thrust, It is acceptable to mix original metal thrust washers and replacement resin washers on the same unit.
23	86985634	4	SPACER, RING,
24	1349347C1	1	BEARING, NEEDLE,
25	86639256	4	PIN, M8 x 26, Coiled, Coiled Spring
26	360761A1	2	GEAR, RING, 76 T
27	86637645	2	RING, SNAP, #350, Ext,
28	86639323	36	WASHER, M17.5 x 30 x 4, HT, 17.5 x 30 x 4 mm
29	86639230	18	BOLT, Hex, M16 x 150, 10.9, M16 x 150; 10.9
30	800-51100	4	RING, SNAP, M100, Ext, Hvy, Retaining, 100 mm

06 -52 AXLE ASSY - FRONT COVER (TJ375 HD, TJ425 HD, TJ450, TJ500)

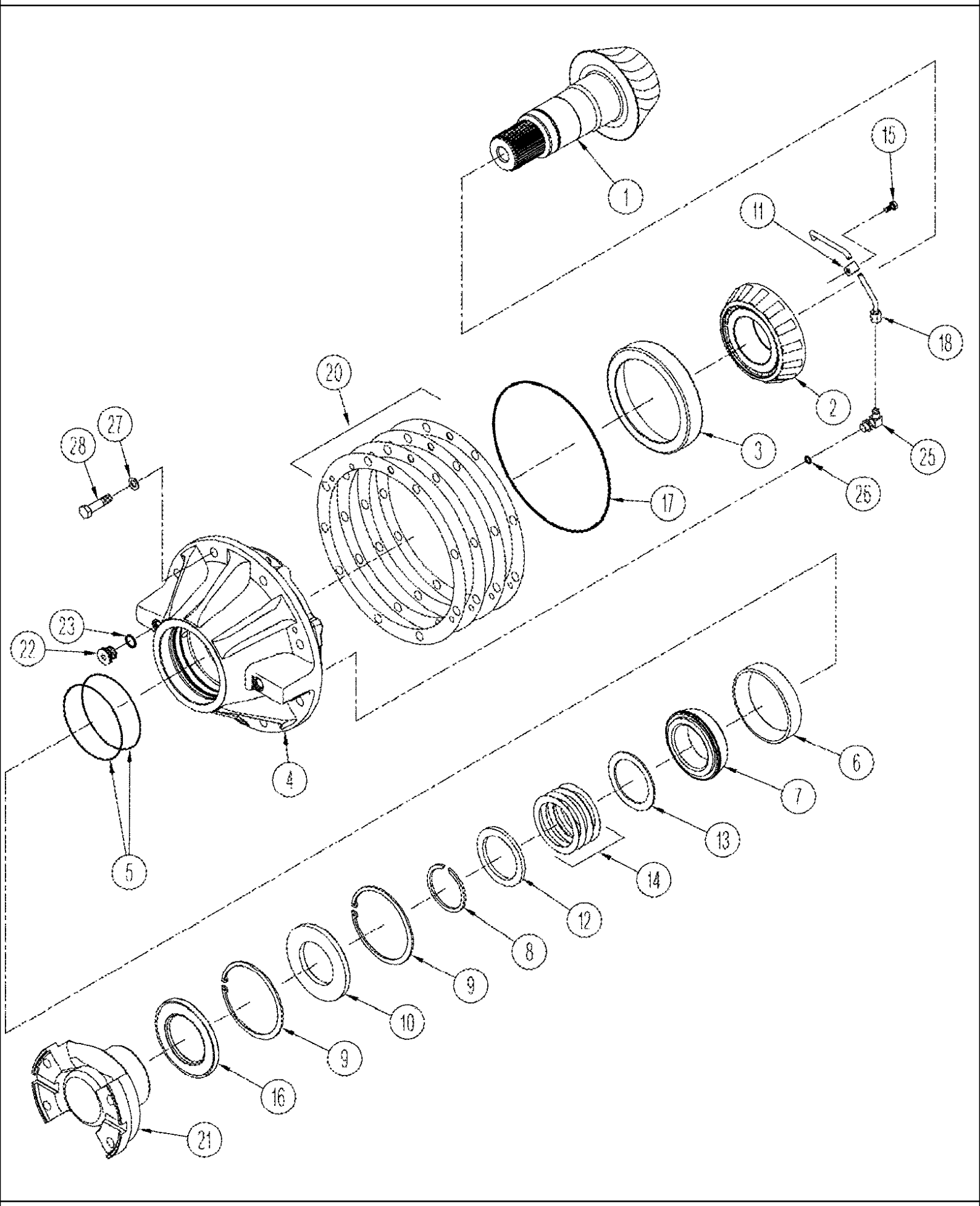

06 -52 AXLE ASSY - FRONT COVER (TJ375 HD, TJ425 HD, TJ450, TJ500)

ссылка	Номер детали	Кол-во	Описание
	352211A1	1	GEAR SET, Pinion Shaft And Gears, Inc. 1, See Figure(s) : 06-56 - 06-57
1	NSS	1	NOT SERVICED SEPARATELY, Shaft, Pinion
2	248118A1	1	BEARING, CONE,
3	248114A1	1	BEARING SET,
4	328421A5	1	COVER,
5	14458081	1	O-RING, -122, Cl 7, 1.112" ID x .103" Thk,
6	191440A1	1	BEARING, CUP,
7	67190R91	1	BEARING, CONE,
8	229515A1	1	SNAP RING, Retaining, M4
9	86534066	2	RING, SNAP, 5.50", Int, #550, 5.50", Int, #550
10	87432424	1	SEAL, Pinion, Input Shaft
11	853764	1	CLAMP, 5/16", Insul, 5/16" Bolt,
12	228968A2	1	SPACER, Thick
13	191713A1	1	SPACER, Thin
14	191709A1	AR	SHIM, 0,076 mm
14	191711A1	AR	SHIM, 0,101 mm
14	191712A1	AR	SHIM, 0.130 mm
14	220785A1	AR	SHIM, 0,508 mm
15	43232	1	SCREW, M8 x 16; 10.9
16	284186A1	1	SEAL,
17	86625090	1	O-RING, -276, 70 Duro, 10.984" ID x .139" Thk, 11 ID x 1/8
18	284180A1	1	PIPE, Lubrication
19	9617873	2	O-RING, 6-1, 90 Duro, .468" ID x .078" Thk, Not Illustrated
20	279714A4	AR	SHIM, 0,076 mm
20	279715A4	AR	SHIM, 0,101 mm
20	279716A4	AR	SHIM, 0,130 mm
20	279717A4	AR	SHIM, 0,508 mm
21	284184A1	1	YOKE, 8,5 C
22	221578A1	1	PLUG, Hex Soc, M18 x 1.5, ORB, Includes 23
23	86639043	1	O-RING, 15.3 ID x 2.2 W
24	9625178	1	PLUG, Hex Soc, 9/16"-18 ORB, Not Illustrated
25	86637732	1	ELBOW, 90є, 1/2"-20, 37є x 9/16"-18, O-Ring, 90, 5/16 x 3/8, Inc. 26, BSN RVS001801
25	86985636	1	ELBOW, Orificed, 5/16 x 3/8, Inc. 26, ASN RVS001801
26	9617873	1	O-RING, 6-1, 90 Duro, .468" ID x .078" Thk,
27	86639323	8	WASHER, M17.5 x 30 x 4, HT, 17.5 x 30 x 4 mm
28	9843611	8	BOLT, Hex, M16 x 55, 10.9, Full Thd, Hex, M16 x 55, 10.9, Full Thd
29	221578A1	1	PLUG, Hex Soc, M18 x 1.5, ORB, Includes 30 (1), Not Illustrated
30	86639043	1	O-RING, 15.3 ID x 2.2 W

06 -53 AXLE ASSY - REAR COVER (TJ375 HD, TJ425 HD, TJ450, TJ500)

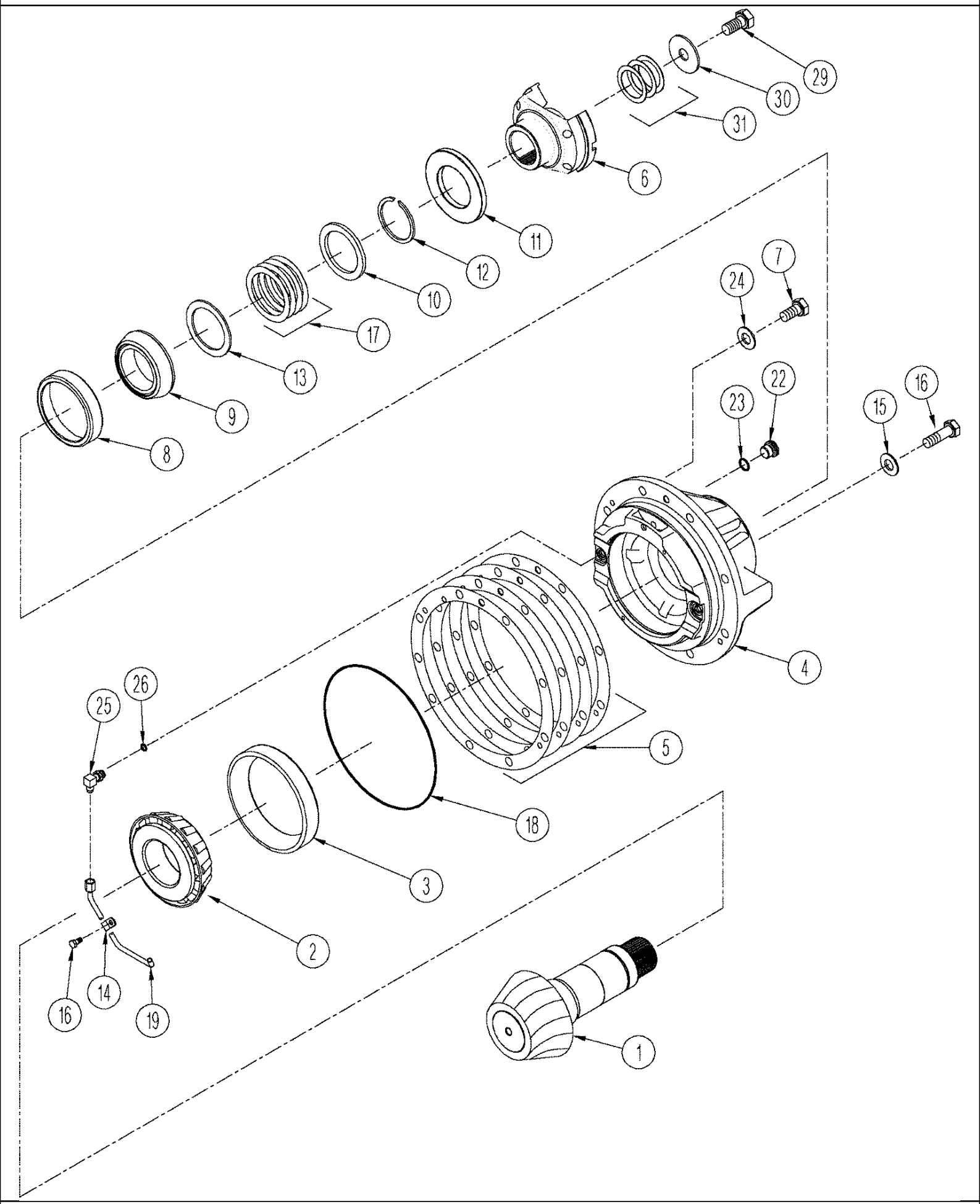

TJ375 TRACTOR - Power Train

06 -53 AXLE ASSY - REAR COVER (TJ375 HD, TJ425 HD, TJ450, TJ500)

ссылка	Номер детали	Кол-во	Описание
	352212A2	1	GEAR SET, Set, Pinion Shaft And Gears, Inc. 1, See Figure(s) : 06-56 - 06-57
1	NSS	1	NOT SERVICED SEPARATELY, Shaft, Pinion
2	248118A1	1	BEARING, CONE,
3	248114A1	1	BEARING SET,
4	328422A5	1	COVER,
5	279714A4	AR	SHIM, 0,076 mm
5	279715A4	AR	SHIM, 0,101 mm
5	279716A4	AR	SHIM, 0,130 mm
5	279717A4	AR	SHIM, 0,508 mm
6	284185A1	1	YOKE, 8,5 C
7	9843611	8	BOLT, Hex, M16 x 55, 10.9, Full Thd, Hex, M16 x 55, 10.9, Full Thd
8	191440A1	1	BEARING, CUP,
9	67190R91	1	BEARING, CONE,
10	229515A1	1	SNAP RING, Retaining, M4
11	87432424	1	SEAL, Oil, Pinion Input Shaft
12	228968A2	1	SPACER, Thick
13	191713A1	1	SPACER, Thin
14	853764	1	CLAMP, 5/16", Insul, 5/16" Bolt,
15	86639333	3	WASHER, 5/16", 3/4 x 1-1/8 x 1/16
16	43232	4	SCREW, M8 x 16; 10.9
17	191709A1	1	SHIM, 0,076 mm
17	191711A1	1	SHIM, 0,101 mm
17	191712A1	1	SHIM, 0,130 mm
17	220785A1	1	SHIM, 0,508 mm
18	86625090	1	O-RING, -276, 70 Duro, 10.984" ID x .139" Thk, 11 ID x 1/8
19	313377A1	1	PIPE, Lubrication
20	221578A1	1	PLUG, Hex Soc, M18 x 1.5, ORB, Includes 21, Not Illustrated
21	86639043	1	O-RING, 15.3 ID x 2.2
22	9625178	1	PLUG, Hex Soc, 9/16"-18 ORB, Not Illustrated, Includes 28
24	86639323	8	WASHER, M17.5 x 30 x 4, HT, 17.5 x 30 x 4 mm
25	86637732	1	ELBOW, 90є, 1/2"-20, 37є x 9/16"-18, O-Ring, 90, 5/16 x 3/8, Inc. 26, BSN RVS001801
25	86985636	1	ELBOW, Orficed, 5/16 x 3/8, Inc. 26
26	9617873	1	O-RING, 6-1, 90 Duro, .468" ID x .078" Thk,
27	9625178	1	PLUG, Hex Soc, 9/16"-18 ORB, Not Illustrated, Includes 28, TJ375 Heavy Duty, TJ450
29	9780064	1	BOLT, Hex, M24 x 110, 10.9, Cap, HH, CL 10.9, M24 x 3 x 110
30	228967A2	1	WASHER, Retaining
31	178545A1	AR	SHIM, 0,076 mm
31	178546A1	AR	SHIM, 0,101 mm
31	178547A1	AR	SHIM, 0,130 mm
31	220779A1	AR	SHIM, 0,508 mm
23	9993141	1	O-RING, -012, 90 Duro, .364" ID x .070" Thk,
28	9993141	1	O-RING, -012, 90 Duro, .364" ID x .070" Thk,

06 -54 AXLE ASSY - CENTER AND LEFT-HAND CARRIER (TJ375 HD, TJ425 HD, TJ450, TJ500)

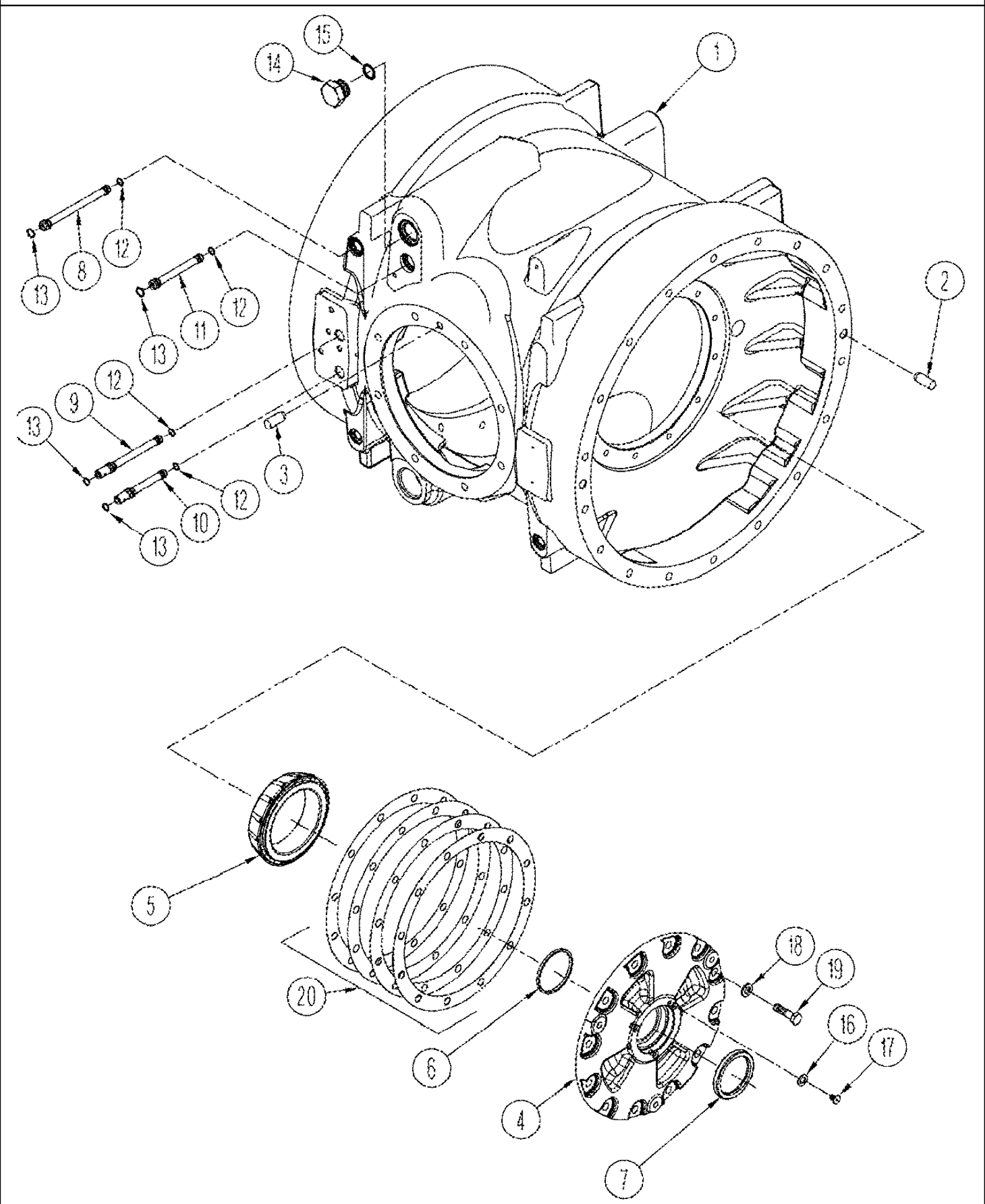

06 -54 AXLE ASSY - CENTER AND LEFT-HAND CARRIER (TJ375 HD, TJ425 HD, TJ450, TJ500)

ссылка	Номер детали	Кол-во	Описание
	333402A1	1	HOUSING, AXLE, Center, Inc. 1 - 3, BSN RVS001801
	87402395	1	HOUSING, AXLE, Axle, Center. Inc. 1 - 3, ASN RVS001801
1	NSS	1	NOT SERVICED SEPARATELY, Housing
2	86639248	6	DOWEL, M16 x 40, 16 x 40 mm
3	86639247	1	DOWEL, M12 x 25, 12 x 25 mm
4	369765A1	1	CARRIER, BEARING,
5	253932A1	1	BEARING, CONE,
6	139060C2	1	RING,
7	139059C1	1	SEAL,
8	284188A1	1	TUBE, Jumper, Service Brake
9	329808A1	1	TUBE, Jumper, Lubrication, BSN RVS001801
9	86985628	1	TUBE, Jumper, Lubrication, ASN RVS001801
10	370783A2	1	TUBE, Jumper, Lubrication, BSN RVS001801
10	86985628	1	TUBE, Jumper, Lubrication, ASN RVS001801
11	298567A1	1	TUBE, Jumper, Park Brake
12	272217	4	O-RING, -013, 90 Duro, .426" ID x .070" Thk,
13	165212	4	O-RING, -015, 90 Duro, .551" ID x .070" Thk, 90 Duro, .551" ID x .070" Thk
14	220069A1	1	PLUG, M33 x 2, ORB, M33 orb x 2, Inc. 15
15	86639046	1	O-RING, Cl 6, 29.6MM ID x 2.9 Thk, 29.6 ID x 2.9
16	86639334	3	WASHER, 33/64" x 7/8" x .049", 33/64 x 7/8
17	86639264	3	SCREW, Hex Flat Hd, M8 x 12, 4.8, M8 x 12; 4.8
18	86639321	12	WASHER, 13.5 x 24 x 3 mm
19	412087	12	BOLT, Hex, M12 x 45, 10.9, Full Thd,
20	255121A1	AR	SHIM, 0,076 mm
20	255122A1	AR	SHIM, 0,101 mm
20	255123A1	AR	SHIM, 0,130 mm
20	255124A1	AR	SHIM, 0,508 mm

06 -56 AXLE ASSY - DIFFERENTIAL, WITH DIFFERENTIAL LOCKS (TJ375 HD, TJ425 HD, TJ450, TJ500)

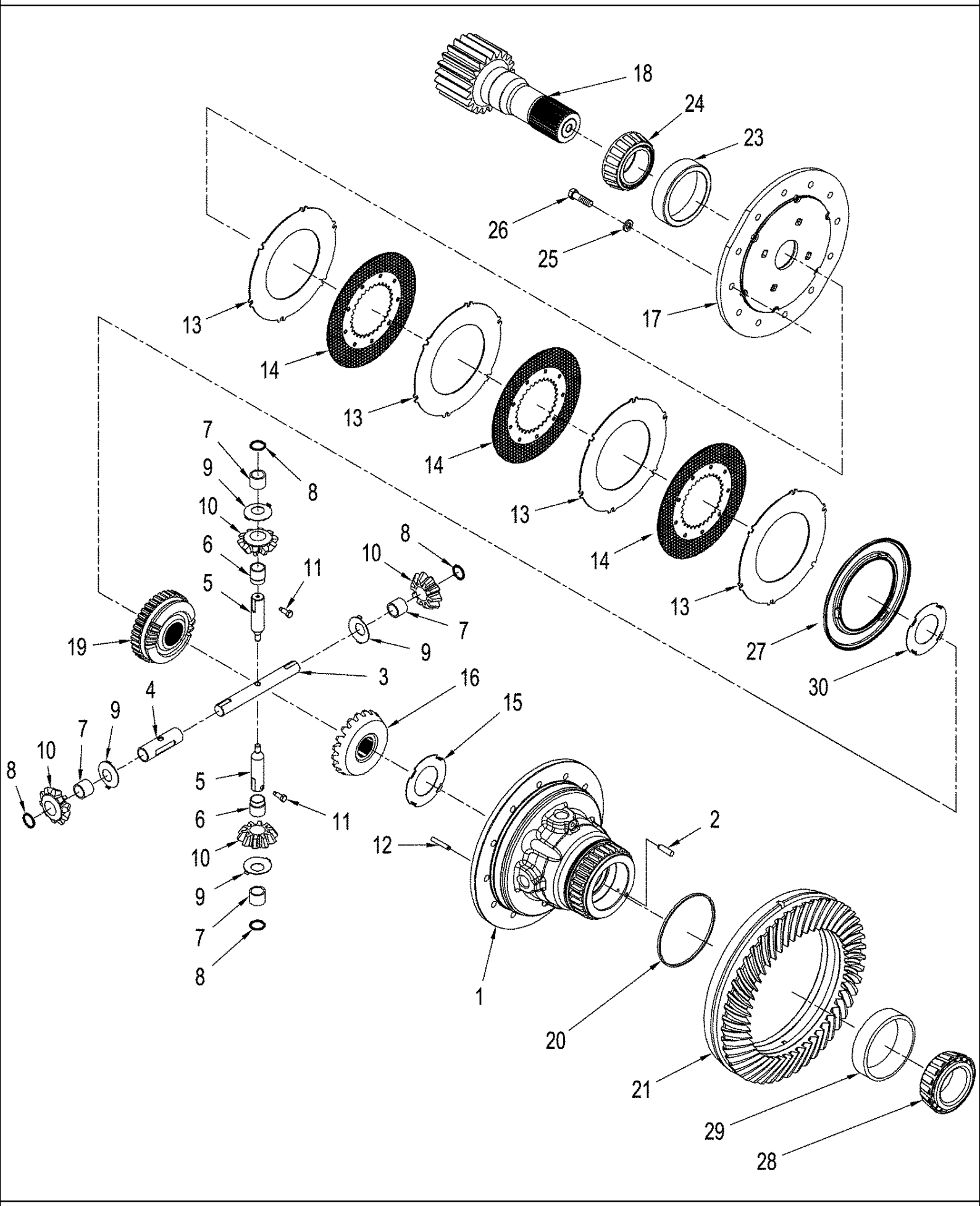

06 -56 AXLE ASSY - DIFFERENTIAL, WITH DIFFERENTIAL LOCKS (TJ375 HD, TJ425 HD, TJ450, TJ500)

ссылка	Номер детали	Кол-во	Описание
	413410A1	1	DIFFERENTIAL ASSY, Inc. 1, 2
1	NSS	1	NOT SERVICED SEPARATELY, Housing
2	1342851C1	1	PLUG, 10 mm
3	92907C1	1	SHAFT, Pinion, Long
4	1289349C1	1	SPACER, Long Pinion
5	92906C1	2	SHAFT, SHORT, Pinion
6	1289350C1	2	SPACER,
7	1270697C1	112	NEEDLE, 28 Per Gear
8	1289348C1	4	RING, Retaining
9	92718C2	4	WASHER,
10	92905C1	4	PINION,
11	1997421C1	2	BOLT, Cross Pin
12	137023A1	6	DOWEL, 10 x 60 mm
13	92915C1	4	PLATE, Separator
14	120679C1	3	PLATE, Friction
15	227116A2	1	WASHER, THRUST,
16	1259633C3	1	GEAR, Bevel, 20T
17	253609A4	1	COVER, Housing
18	279719A2	1	SUN GEAR, Short
19	1259634C3	1	PINION, Lock
20	148939C1	1	SEAL,
	352211A1	1	GEAR SET, Pinion Shaft Gears, Front Axle, Inc. 21, See Figure(s) : 06-52
	352212A2	1	GEAR SET, Set, Pinion Shaft and Gears, Rear Axle, Not Illustrated, Inc. 22, See Figure(s) : 06-53
21	NSS	1	NOT SERVICED SEPARATELY, Gear, Drive, 53 T
22	NSS	1	NOT SERVICED SEPARATELY, Cover, Drive, Rear Axle, Not Illustrated
23	253931A1	1	BEARING SET,
24	253932A1	1	BEARING, CONE,
25	86625266	24	WASHER, M17.5 x 30 x 4, HT,
26	9843611	24	BOLT, Hex, M16 x 55, 10.9, Full Thd, Hex, M16 x 55, 10.9, Full Thd
27	1997422C1	1	PISTON, Brake
28	622336C1	1	BEARING, CONE,
29	A63171	1	BEARING, CUP,
30	227117A2	1	WASHER, THRUST,

06 -57 AXLE ASSY - DIFFERENTIAL, WITHOUT DIFFERENTIAL LOCKS (TJ375 HD, TJ425 HD, TJ450, TJ500)

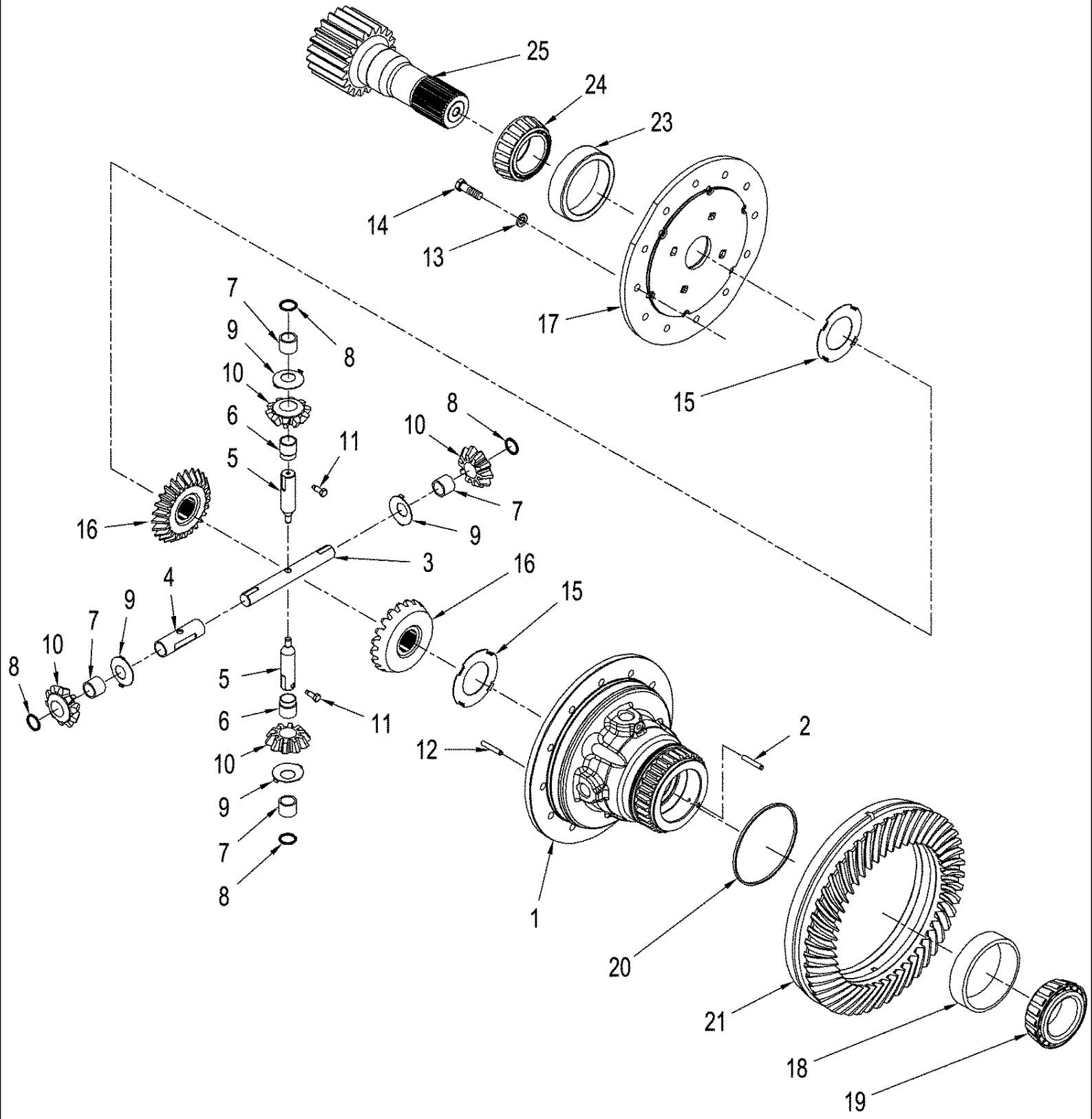

06 -57 AXLE ASSY - DIFFERENTIAL, WITHOUT DIFFERENTIAL LOCKS (TJ375 HD, TJ425 HD, TJ450, TJ500)

ссылка	Номер детали	Кол-во	Описание
	413410A1	1	DIFFERENTIAL ASSY, Inc. 1, 2
1	NSS	1	NOT SERVICED SEPARATELY, Housing
2	1342851C1	1	PLUG, 10 mm
3	92907C1	1	SHAFT, Pinion, Long
4	1289349C1	1	SPACER, Long Pinion
5	92906C1	2	SHAFT, SHORT, Pinion
6	1289350C1	2	SPACER,
7	1270697C1	112	NEEDLE, 28 Per Gear
8	1289348C1	4	RING, Retaining
9	92718C2	4	WASHER,
10	92905C1	4	PINION,
11	1997421C1	2	BOLT, Cross Pin
12	137023A1	6	DOWEL, 10 x 60 mm
13	86625266	24	WASHER, M17.5 x 30 x 4, HT,
14	9843611	24	BOLT, Hex, M16 x 55, 10.9, Full Thd, Hex, M16 x 55, 10.9, Full Thd
15	227116A2	2	WASHER, THRUST,
16	1259633C3	2	GEAR, Bevel, 20T
17	314226A3	1	COVER, Housing
18	622337C1	1	BEARING, CUP,
19	622336C1	1	BEARING, CONE,
20	148939C1	1	SEAL,
	352211A1	1	GEAR SET, Pinion Shaft and Gears, Front Axle, Inc. 21, See Figure(s) : 06-52
	352212A2	1	GEAR SET, Set, Pinion Shaft and Gears, Rear Axle, Not Illustrated, Inc. 22, See Figure(s) : 06-53
21	NSS	1	NOT SERVICED SEPARATELY, Gear, Drive, Front Axle, 53 T
22	NSS	1	NOT SERVICED SEPARATELY, Gear, Drive, Rear Axle, Not Illustrated
23	253931A1	1	BEARING SET,
24	253932A1	1	BEARING, CONE,
25	279719A2	1	SUN GEAR, Short

06 -58 AXLE ASSY - BRAKE AND RIGHT-HAND CARRIER (TJ375 HD, TJ425 HD, TJ450, TJ500)

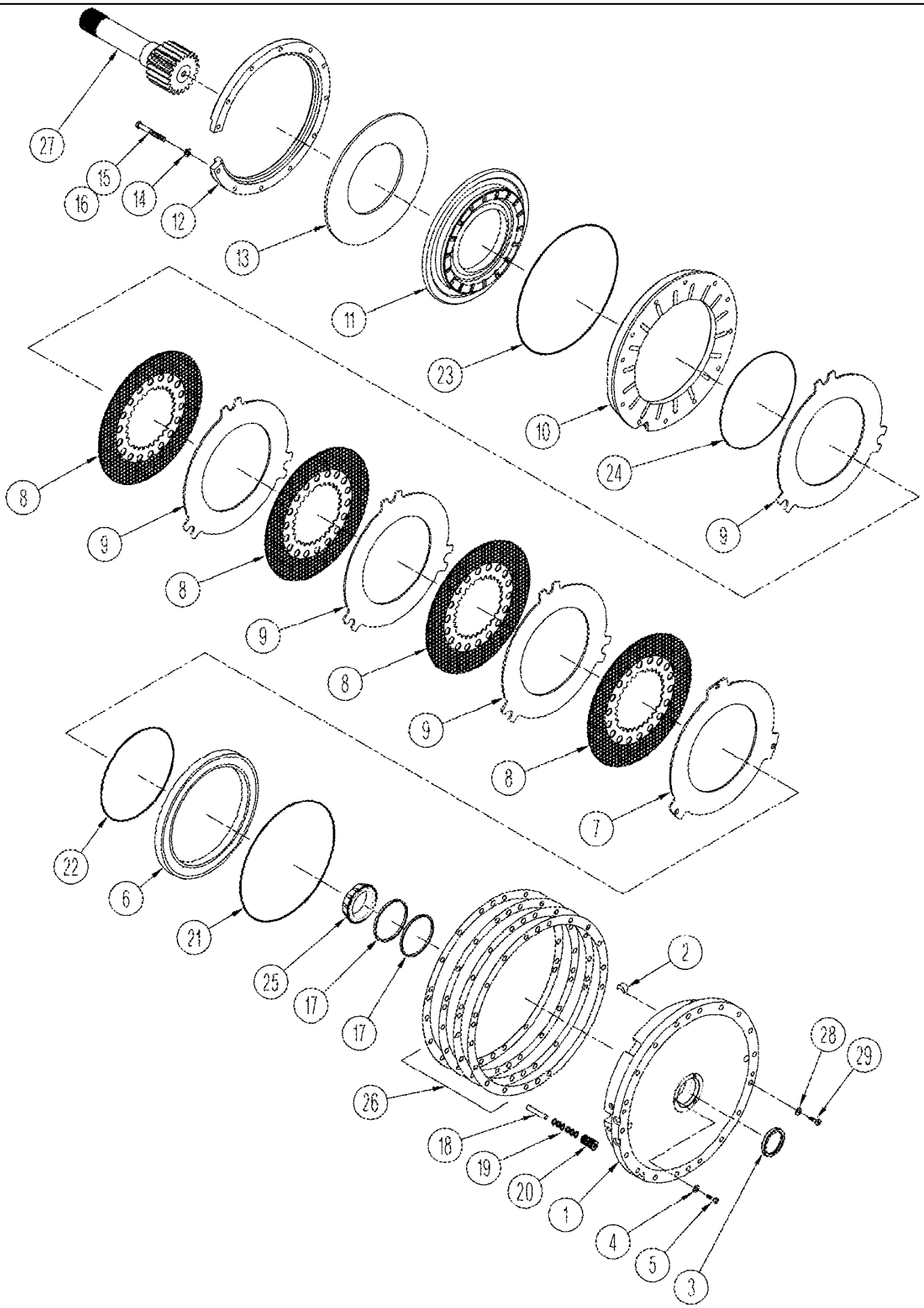

06 -58 AXLE ASSY - BRAKE AND RIGHT-HAND CARRIER (TJ375 HD, TJ425 HD, TJ450, TJ500)

ссылка	Номер детали	Кол-во	Описание
	398453A1	1	CARRIER, Inc. 1, 2
1	NSS	1	NOT SERVICED SEPARATELY, Carrier, Brake
2	NSS	1	NOT SERVICED SEPARATELY, Plug, Expansion, 6,5 mm
3	139059C1	1	SEAL,
4	86639334	3	WASHER, 33/64" x 7/8" x .049", 33/64 x 7/8
5	86639264	3	SCREW, Hex Flat Hd, M8 x 12, 4.8, M8 x 12; 4.8
6	353364A1	1	PISTON, Service Brake
7	228194A3	1	PLATE, Return
8	353363A1	4	PLATE, Friction
9	228193A1	4	PLATE, Separator
10	353367A3	1	PLATE, Backing
11	353369A1	1	PISTON, Park Brake
12	279707A1	1	SNAP RING, Retaining
13	226320A1	1	SPRING,
14	86639321	12	WASHER, 13.5 x 24 x 3 mm
15	86508622	10	BOLT, Hex, M12 x 100, 10.9, Cap, HH, CL 10.9, M12 x 1.75 x 100
16	412605	2	BOLT, Hex, M12 x 90, 10.9,
17	388308A1	2	SEAL, Ring
	363254A1	3	ADJUSTER, ,Adjustment, Inc. 18 - 20
18	86637802	1	DOWEL, 1/2" x 3", Dowel, 1/2 X 3
19	86637643	6	RING, SNAP, #50, Ext, #50, Ext
20	1342928C1	12	WASHER, Thrust
21	86637774	1	O-RING, 1/8 ID x 15; 7
22	86637771	1	O-RING, -277, Cl 7, 11.484" ID x .139" Thk, 1/8 ID x 11-1/2; 7
23	86637775	1	O-RING, 1/8 ID x 16; 7
24	86637772	1	O-RING, 1/8 ID x 12; 7
25	622336C1	1	BEARING, CONE,
26	279709A1	AR	SHIM, 0,076 mm
26	279710A1	AR	SHIM, 0,101 mm
26	279711A1	AR	SHIM, 0,130 mm
26	279712A1	AR	SHIM, 0,508 mm
27	279718A2	1	SHAFT, Long
28	86639322	18	WASHER, M12 x 28.5 x 3, HT, 15.5 x 28 x 3 mm
29	86589011	18	BOLT, Hex, M14 x 3 x 55, 10.9, Hex, M14 x 3 x 55, 10.9

06 -60 AXLE ASSY - FINAL DRIVE (TJ375 HD, TJ425 HD, TJ450, TJ500)

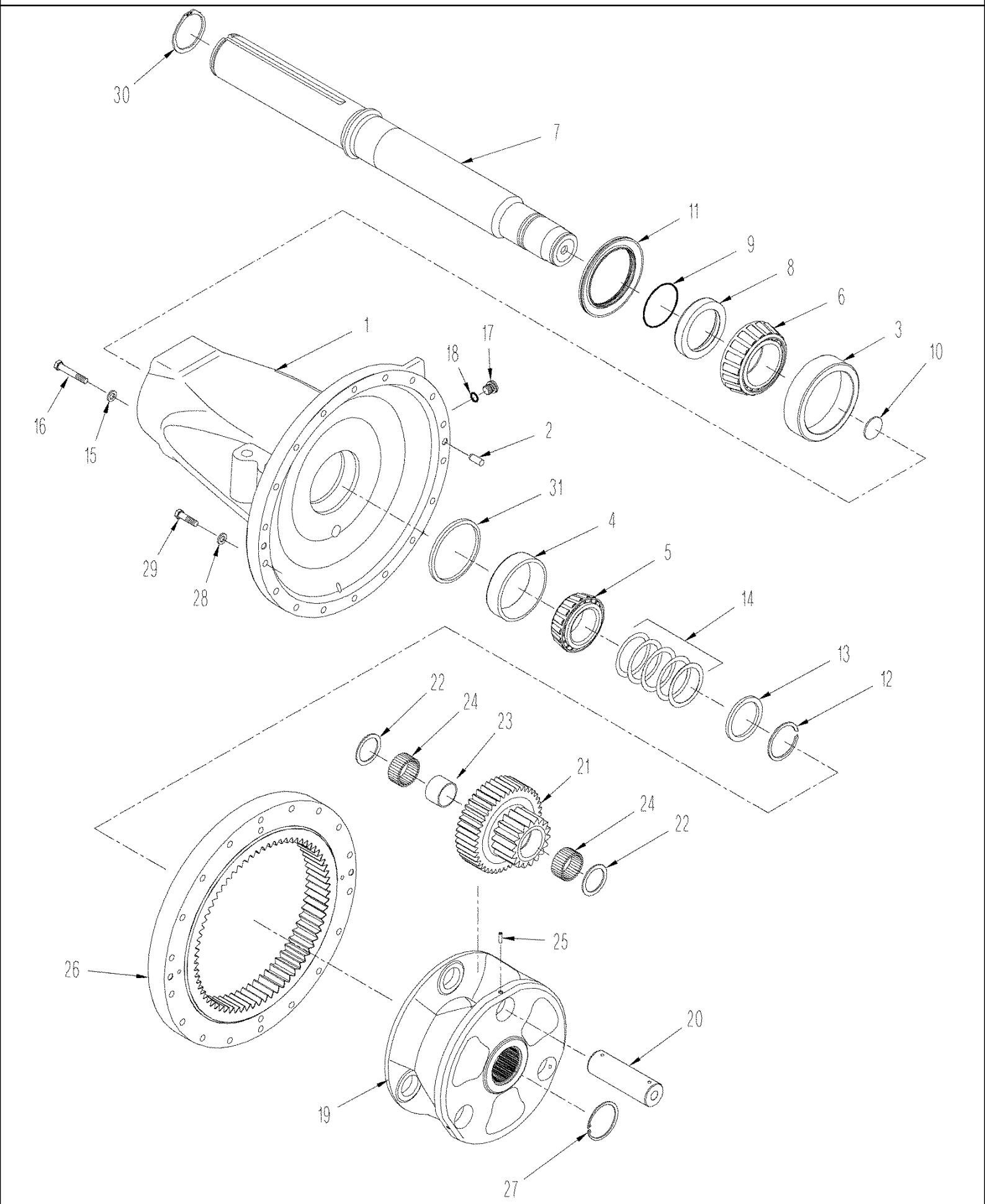

TJ375 TRACTOR - Power Train

06 -60 AXLE ASSY - FINAL DRIVE (TJ375 HD, TJ425 HD, TJ450, TJ500)

ссылка	Номер детали	Кол-во	Описание
	435221A1	1	CARRIER, AXLE, Inc. 1 - 4
1	NSS	1	NOT SERVICED SEPARATELY, Housing
2	86639248	2	DOWEL, M16 x 40, 16 x 40 mm
3	237698A1	1	BEARING, CUP,
4	A136253	1	BEARING SET, , BSN RVS001801
4	1975500C1	1	BEARING, CUP, , ASN RVS001801
5	A136255	1	BEARING, CONE, , BSN RVS001801
5	1975499C1	1	BEARING, CONE, , ASN RVS001801
6	237700A1	1	BEARING, CONE,
	435219A1	1	SHAFT ASSY., 115 mm (4-1/2 in), Axle, Inc. 7 - 10
7	NSS	1	NOT SERVICED SEPARATELY, Shaft, 115 mm (4-1/2 in)
8	239529A1	1	BUSHING, Outboard
9	86637742	1	O-RING, -246, 70 Duro, 4.484" ID x .139" Thk, 4.484" ID x .139" Thk
10	1981270C1	1	INSERT,
11	239942A3	1	SEAL,
12	243856A1	1	SNAP RING, Retaining, BSN RVS001801
12	435222A1	1	SNAP RING, Retaining, ASN RVS001801
13	124744C1	1	RING, , BSN RVS001801
13	436752A1	1	RING, THRUST, Retaining, ASN RVS001801
14	143921C1	1	SHIM, 0,76 mm, BSN RVS001801
14	437392A1	1	SHIM, , ASN RVS001801
14	143922C1	1	SHIM, 0,30 mm, BSN RVS001801
14	437393A1	1	SHIM, , ASN RVS001801
14	143923C1	1	SHIM, 0,13 mm, BSN RVS001801
14	437394A1	1	SHIM, , ASN RVS001801
14	143924C1	1	SHIM, 0,10 mm, BSN RVS001801
14	437395A1	1	SHIM, , ASN RVS001801
14	143925C1	1	SHIM, 0,076 mm, BSN RVS001801
14	437396A1	1	SHIM, , ASN RVS001801
15	86639333	4	WASHER, 5/16", 3/4 x 1-1/8 x 1/16
16	43232	4	SCREW, M8 x 16; 10.9
17	221578A1	1	PLUG, Hex Soc, M18 x 1.5, ORB, Includes 18
18	86639043	1	O-RING, 15.3 ID x 2.2
19	435215A1	1	CARRIER, AXLE, Planetary, 44T / 18T, Large Spline, See Service Bulletin NTR SB 005 03 for Further Information.
19	86985638	1	CARRIER, AXLE, Planetary, 44T / 18T, Small Spline, See Service Bulletin NTR SB 005 03 for Further Information.
20	357483A1	3	SHAFT,
21	357347A2	3	GEAR, 18 T / 44 T
22	397449A1	6	WASHER, THRUST,
23	377650A1	3	SPACER,
24	360785A1	1	NEEDLE, 58 per gear
25	86639256	3	PIN, M8 x 26, Coiled, 10 x 25mm, Coiled Spring
26	357346A1	2	GEAR, 69 T
27	86637645	2	RING, SNAP, #350, Ext,

06 -60 AXLE ASSY - FINAL DRIVE (TJ375 HD, TJ425 HD, TJ450, TJ500)

ссылка	Номер детали	Кол-во	Описание
28	86639323	36	WASHER, M17.5 x 30 x 4, HT, 17.5 x 30 x 4 mm
29	86639230	36	BOLT, Hex, M16 x 150, 10.9, M16 x 150, CL10.9, BSN RVS001801
29	87015550	36	BOLT, Hex, M16 x 130, 10.9, M16 x 130, CL10.9, ASN RVS001801
30	11082676	4	RING, SNAP, M115, Ext, Retaining, 115 mm
31	435216A1	2	SPACER, , ASN RVS001801

06 -62 AXLE ASSY JET PUMP

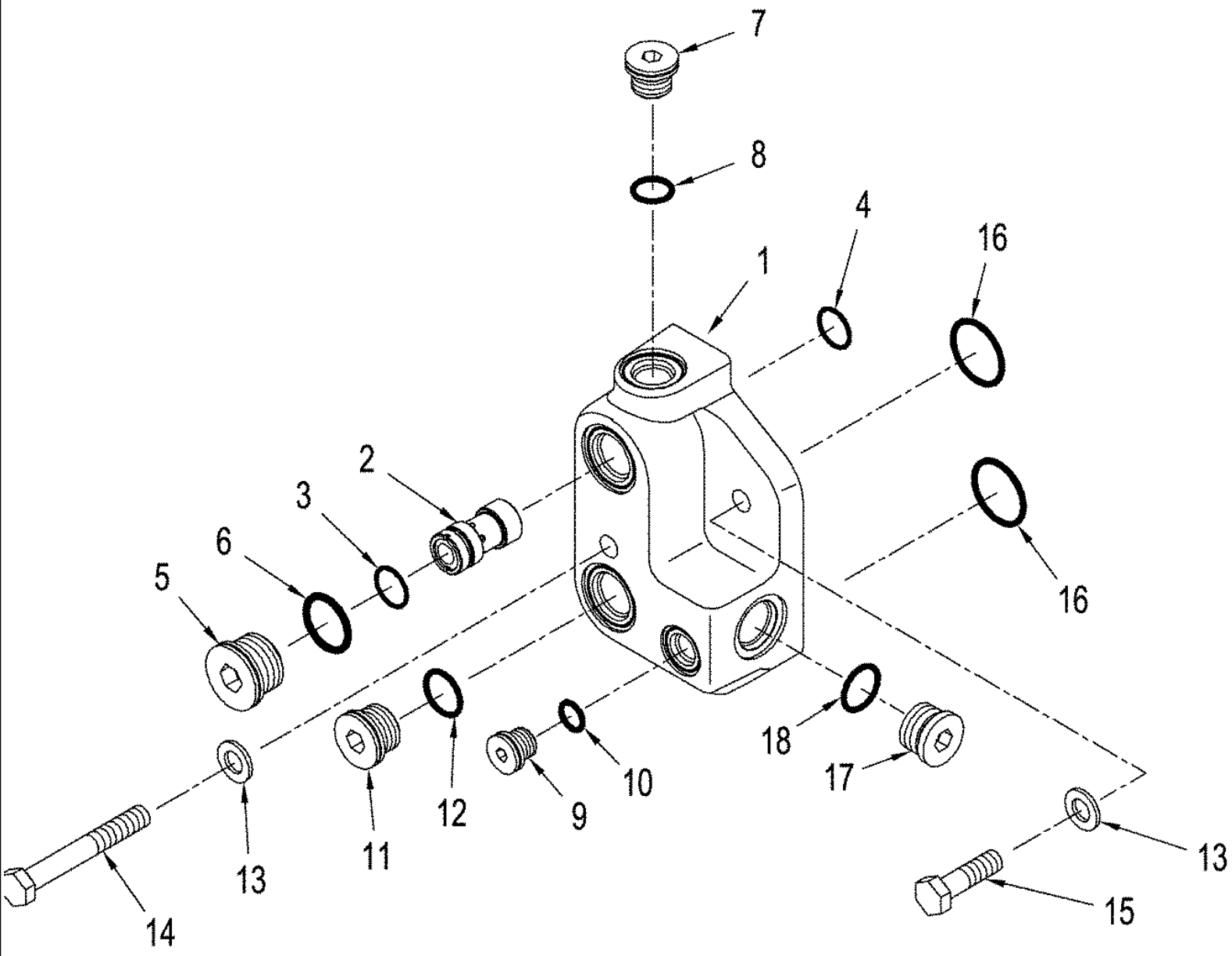

TJ375 TRACTOR - Power Train

06 -62 AXLE ASSY JET PUMP

ссылка	Номер детали	Кол-во	Описание
1	369878A1	1	BLOCK, , BSN RVS001801
1	428862A1	1	PUMP, LUBE, Lube, ASN RVS001801
2	347294A3	1	PUMP,
3	9861410	1	O-RING, -017, 90 Duro, .676" ID x .070" Thk,
4	49861	1	O-RING, -110, 70 Duro, .362" ID x .103" Thk, 3/32 ID x 3/4; 5
5	221580A1	1	PLUG, Hex Soc, M27 x 2, ORB, Includes 6
6	86639045	1	O-RING, Cl 6, 23.6MM ID x 2.9 Thk, 23.6 ID x 2.9
7	221578A1	2	PLUG, Hex Soc, M18 x 1.5, ORB, Includes 8
8	86639043	2	O-RING, 15.3 ID x 2.2
9	221576A1	1	PLUG, Hex Soc, M14 x 1.5, ORB, Includes 10
10	86639042	1	O-RING, Cl 6, 11.3MM ID x 2.2 Thk, 11.3 ID x 2.2
11	221579A1	1	PLUG, Hex Soc, M22 x 1.5, ORB, Includes 12
12	86639044	1	O-RING, Cl 6, 19.3MM ID x 2.2 Thk, 19.3 ID x 2.2 mm
13	86624176	3	WASHER, M10 x 20 x 2, M10
14	86639212	1	BOLT, Hex, M10 x 75, 10.9, M10 x 70; 10.9
15	86625011	2	BOLT, Hex, M10 x 35, 10.9, Full Thd, M10 x 35; 10.9
16	14458081	2	O-RING, -122, Cl 7, 1.112" ID x .103" Thk,
17	86625138	1	PLUG, Hex Soc, 7/8"-14 ORB, Includes 18
18	167269	1	O-RING, 10-1, 90 Duro, .755" ID x .097" Thk,

07 -01 BRAKE CONTROL

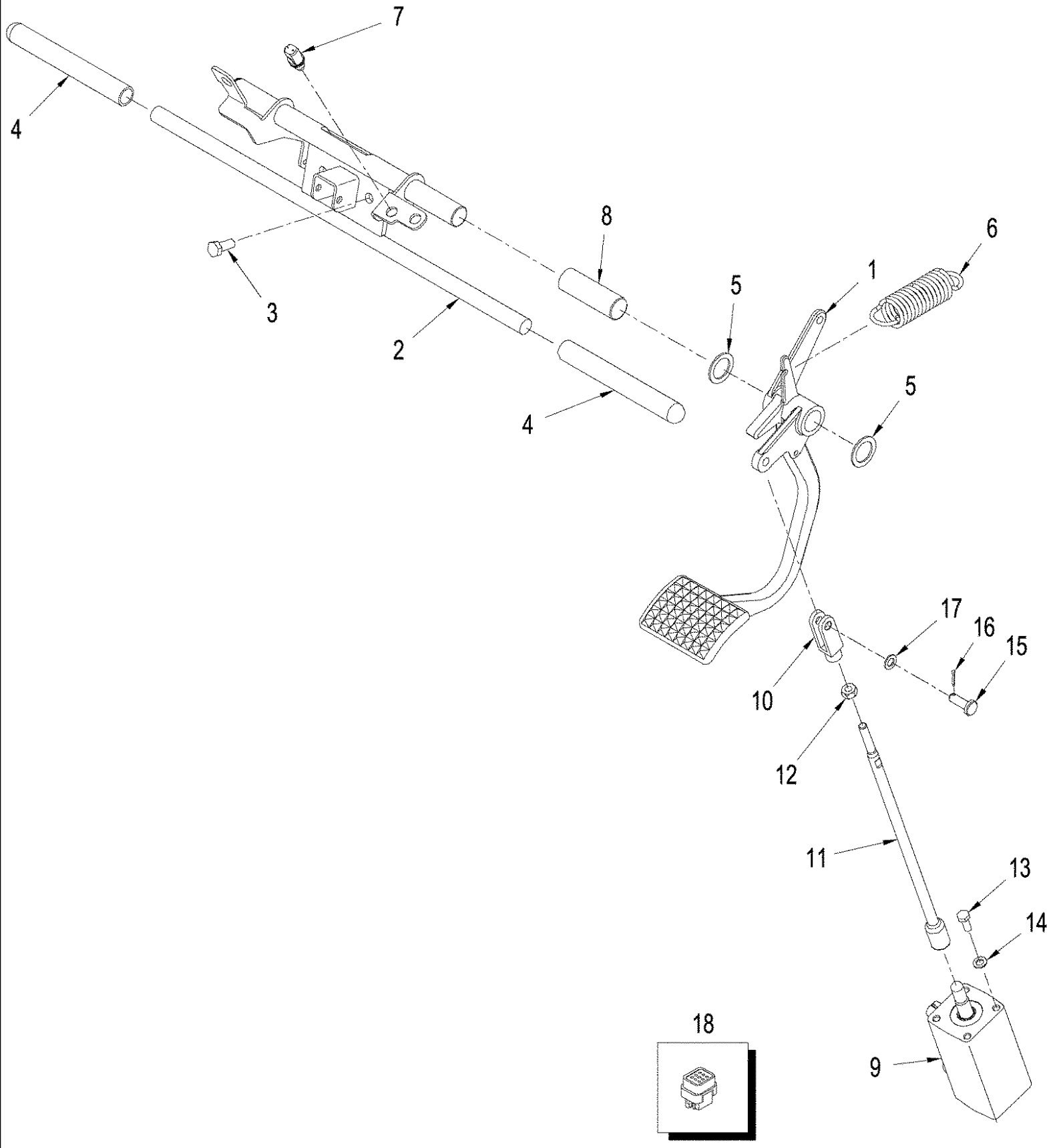

TJ375 TRACTOR - Brakes

07 -01 BRAKE CONTROL

ссылка	Номер детали	Кол-во	Описание
1	222462A2	1	PEDAL,
2	370247A3	1	SUPPORT,
3	43139	2	SCREW, Cap, HH, CL 8.8, M10 x 1.5 x 25
4	321961A1	2	MOLDING,
5	281093A1	2	WASHER,
6	278210A1	1	SPRING,
7	279265A2	1	SWITCH, Brake Light
8	281893A1	1	BEARING, Pivot
9	302822A3	1	VALVE, Brake, See Figure(s) : 07-02
10	1537272C1	1	CLEVIS, M10 x 40
11	369851A1	1	ROD,
12	86500689	1	NUT, M10, Cl 10, M10; 10.9
13	43233	4	BOLT, Hex, M8 x 20, 10.9, Cap, HH, CL 10.9, M8 x 1.25 x 20
14	86624184	4	WASHER, M8 x 16 x 1.6, 9 x 17 x 1.6 mm
15	86639108	1	PIN, CLEVIS, M10 x 30, 10 x 30 mm
16	86639116	1	PIN, SPLIT (COTTER), M2.5 x 12, 2.5 x 12 mm
17	86625251	1	WASHER, M10 x 18 x 1.6, 11 x 18 x 1.6 mm
18	345471A1	1	SWITCH, Differential Lock

07 -02 BRAKE VALVE ASSY

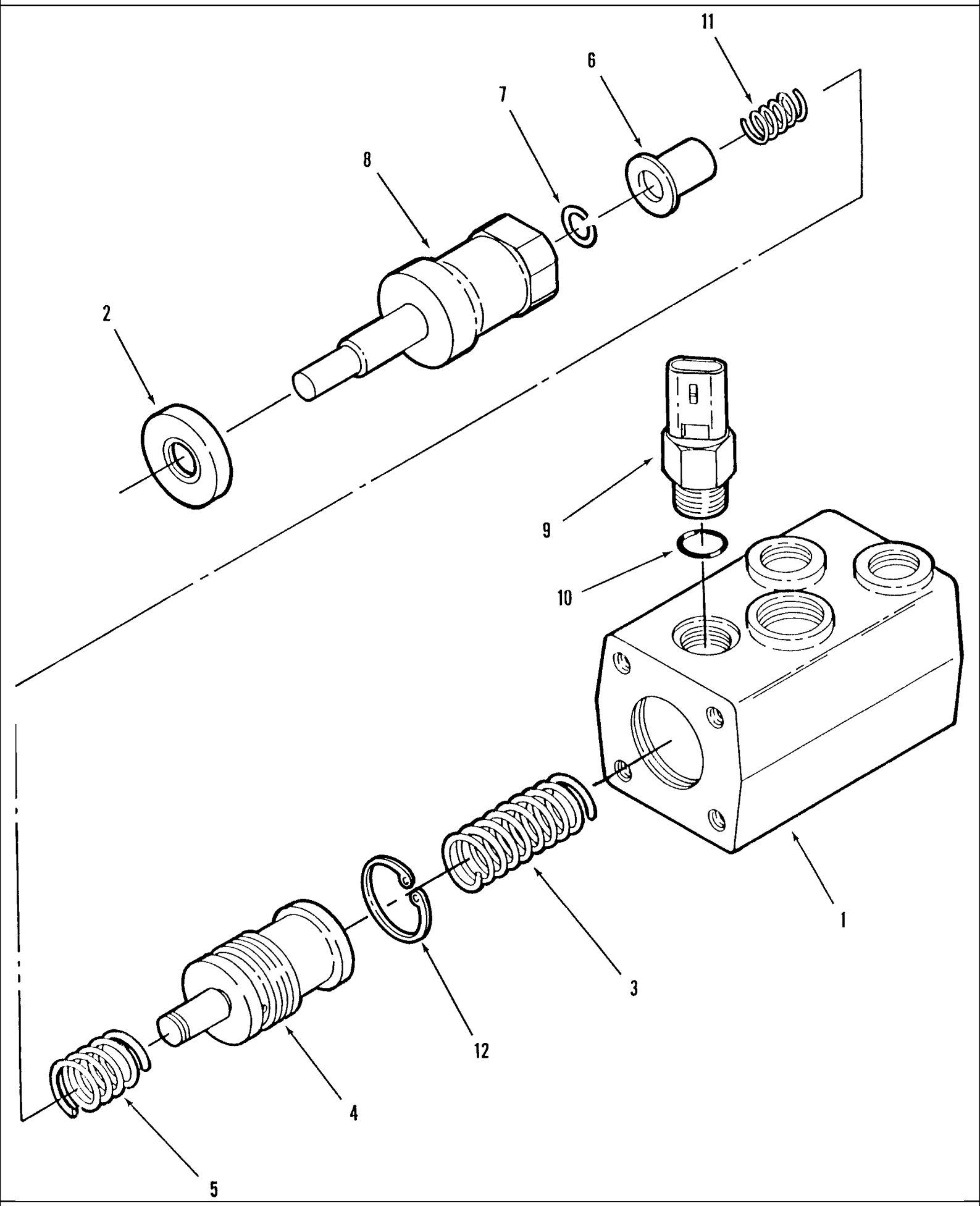

TJ375 TRACTOR - Brakes

07 -02 BRAKE VALVE ASSY

ссылка	Номер детали	Кол-во	Описание
	302822A3	1	VALVE, Brake, Inc. 1 - 10
1	NSS	1	NOT SERVICED SEPARATELY, Housing
2	195806A1	1	SEAL,
3	185613A1	1	SPRING,
4	280297A1	1	SPOOL,
5	291105A1	1	SPRING, Outer
6	291107A1	1	RETAINER,
7	229659A1	1	RING, SNAP, Retaining
8	291106A1	1	STEM,
9	279266A1	1	SWITCH, Inc. 10
10	86513328	1	O-RING, 3-1, .301" ID x .064" Thk,
11	291104A1	1	SPRING,
12	167111	1	RING, SNAP, 1.50", Int, #150,

07-03(01) AXLE HYDRAULICS - SERVICE BRAKE CIRCUIT (TJ375, TJ425 MANUAL SHIFT, TJ450)

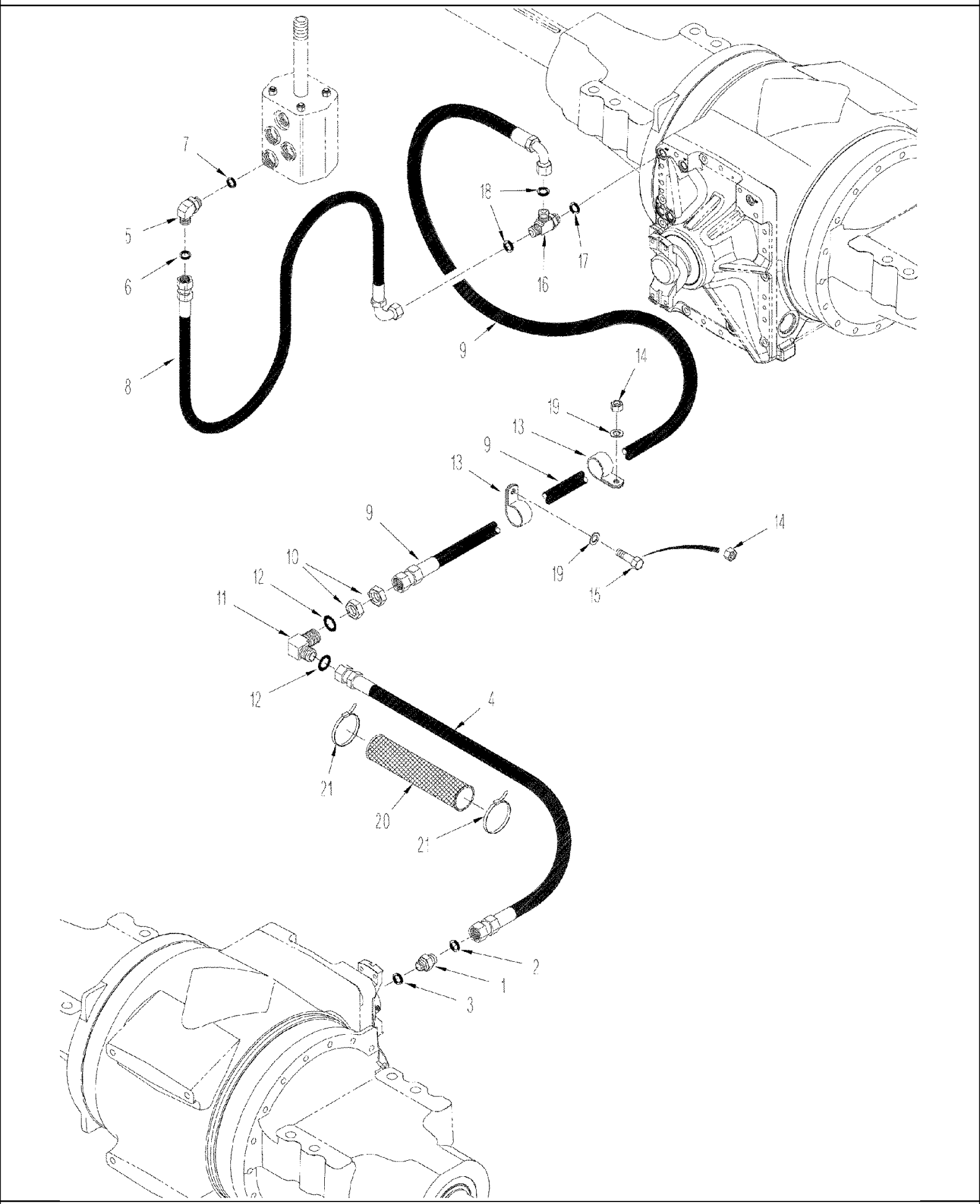

07-03(01) AXLE HYDRAULICS - SERVICE BRAKE CIRCUIT (TJ375, TJ425 MANUAL SHIFT, TJ450)

ссылка	Номер детали	Кол-во	Описание
1	401760A1	1	VALVE, Check, 13/16 fc sl x 22 or, Inc. 2, 3
2	9992298	1	O-RING, -014, 90 Duro, .489" ID x .070" Thk,
3	86639044	1	O-RING, Cl 6, 19.3MM ID x 2.2 Thk, 19.3 ID x 2.2 mm
4	392132A1	1	HOSE ASSY., 2125 mm (84 in)
5	86579691	1	ELBOW, 90є, 13/16"-18 ORFS x M18 x 1.5 ORB, Includes 6, 7
6	9992298	1	O-RING, -014, 90 Duro, .489" ID x .070" Thk,
7	86639043	1	O-RING, 15.3 ID x 2.2
8	361957A2	1	HOSE, 863 mm (34 in), BSN RVS001940
8	87427434	1	HOSE ASSY., 1010 mm (39-49/64 in), ASN RVS001940
9	353609A1	1	HOSE ASSY., 2115 mm (83 in)
10	86639083	2	NUT, LOCK, 13/16"-16, ORFS Blkhd, 13/16 in
11	86639079	1	ELBOW, 90є, 13/16"-16, ORFS, Blkhd, 90, 13/16 fc sl x blkhd, Inc. 12
12	9992298	2	O-RING, -014, 90 Duro, .489" ID x .070" Thk,
13	86637979	2	CLAMP, 13/16", Insul, 3/8" Bolt, P-type
14	43362	2	NUT, M8, Cl 10,
15	43234	1	BOLT, Hex, M8 x 25, 10.9, Cap, HH, CL 10.9, M8 x 1.25 x 25, BSN RVS001801
16	86639058	1	TEE, 13/16"-16 ORFS x M22 x 1.5 ORB Run, 13/16 fc sl x 22 orb, Inc. 17, 18
17	86639044	1	O-RING, Cl 6, 19.3MM ID x 2.2 Thk, 19.3 ID x 2.2 mm
18	9992298	2	O-RING, -014, 90 Duro, .489" ID x .070" Thk,
19	86624184	1	WASHER, M8 x 16 x 1.6, 9 x 16 x 1,6 mm
20	S120426	1	SLEEVE,
21	L18331	2	STRAP, CABLE, Tie

07-03(02) AXLE HYDRAULICS - SERVICE BRAKE CIRCUIT (TJ375 HD, TJ425 POWER SHIFT, TJ450, TJ500)

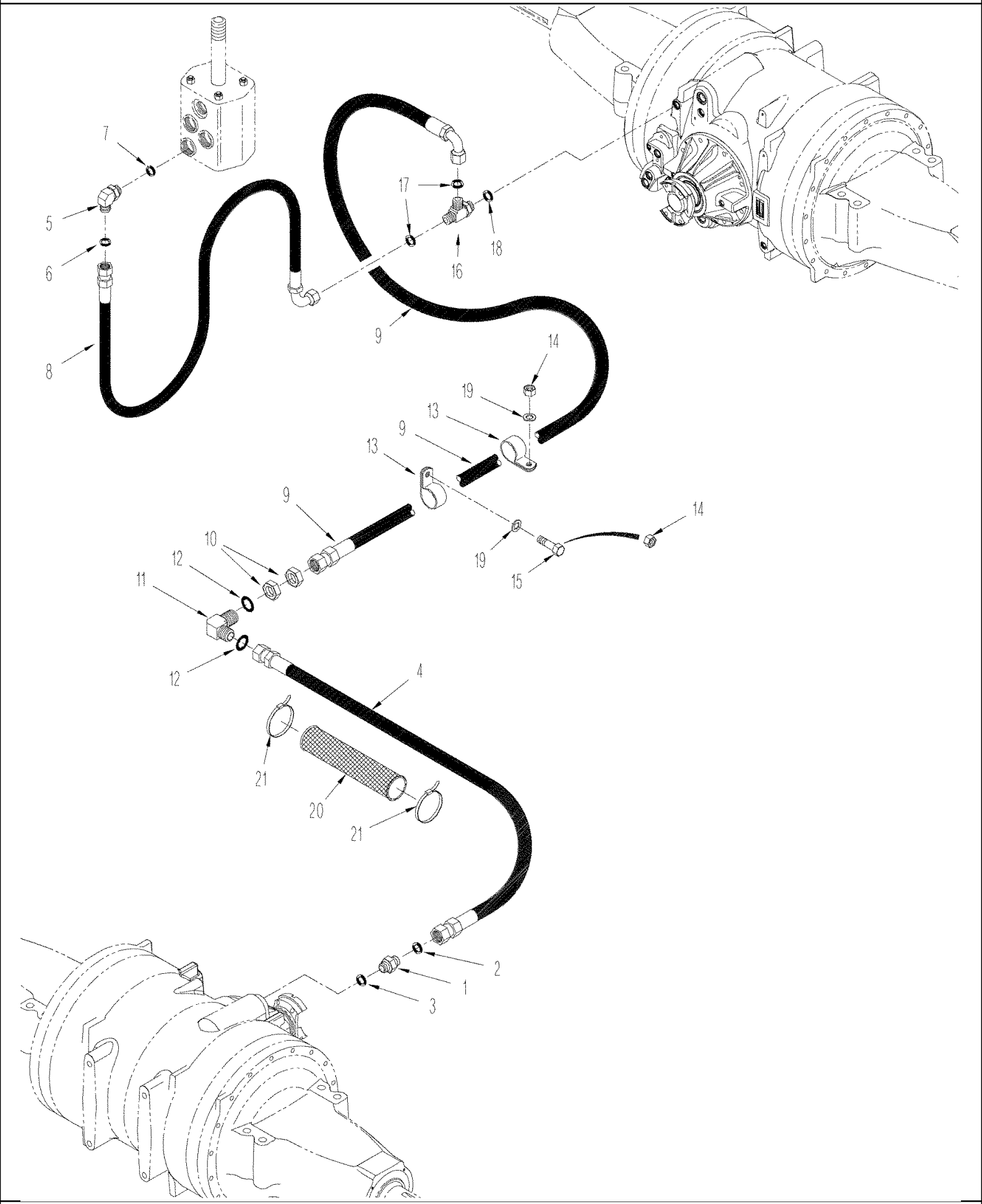

07-03(02) AXLE HYDRAULICS - SERVICE BRAKE CIRCUIT (TJ375 HD, TJ425 POWER SHIFT, TJ450, TJ500)

ссылка	Номер детали	Кол-во	Описание
1	401760A1	1	VALVE, Check, 13/16 fc sl x 22 or, Inc. 2, 3
2	9992298	1	O-RING, -014, 90 Duro, .489" ID x .070" Thk,
3	86639044	1	O-RING, Cl 6, 19.3MM ID x 2.2 Thk, 19.3 ID x 2.2 mm
4	391243A2	1	HOSE ASSY., 2184 mm (86 in)
5	86579691	1	ELBOW, 90є, 13/16"-18 ORFS x M18 x 1.5 ORB, Includes 6, 7
6	9992298	1	O-RING, -014, 90 Duro, .489" ID x .070" Thk,
7	86639043	1	O-RING, 15.3 ID x 2.2
8	353608A1	1	HOSE ASSY., 787 mm (31 in), BSN RVS001940
8	87427437	1	HOSE ASSY., 1051 mm (41-11/32 in), ASN RVS001940
9	353609A1	1	HOSE ASSY., 2115 mm (83 in)
10	86639083	2	NUT, LOCK, 13/16"-16, ORFS Blkhd, 13/16 in
11	86639079	1	ELBOW, 90є, 13/16"-16, ORFS, Blkhd, 90, 13/16 fc sl x blkhd, Inc. 12
12	9992298	2	O-RING, -014, 90 Duro, .489" ID x .070" Thk,
13	86637979	2	CLAMP, 13/16", Insul, 3/8" Bolt, P-type
14	43362	2	NUT, M8, Cl 10,
15	43234	1	BOLT, Hex, M8 x 25, 10.9, Cap, HH, CL 10.9, M8 x 1.25 x 25, BSN RVS001801
16	86639058	1	TEE, 13/16"-16 ORFS x M22 x 1.5 ORB Run, 13/16 fc sl x 22 orb, Inc. 17
17	9992298	2	O-RING, -014, 90 Duro, .489" ID x .070" Thk,
18	86639044	1	O-RING, Cl 6, 19.3MM ID x 2.2 Thk, 19.3 ID x 2.2 mm
19	86624184	1	WASHER, M8 x 16 x 1.6, 9 x 16 x 1,6 mm
20	S120426	1	SLEEVE,
21	L18331	1	STRAP, CABLE, Tie

07-04(01) AXLE HYDRAULICS - PARK BRAKE CIRCUIT, WITH DIFFERENTIAL LOCKS (TJ375, TJ425 MANUAL SHIFT, TJ450)

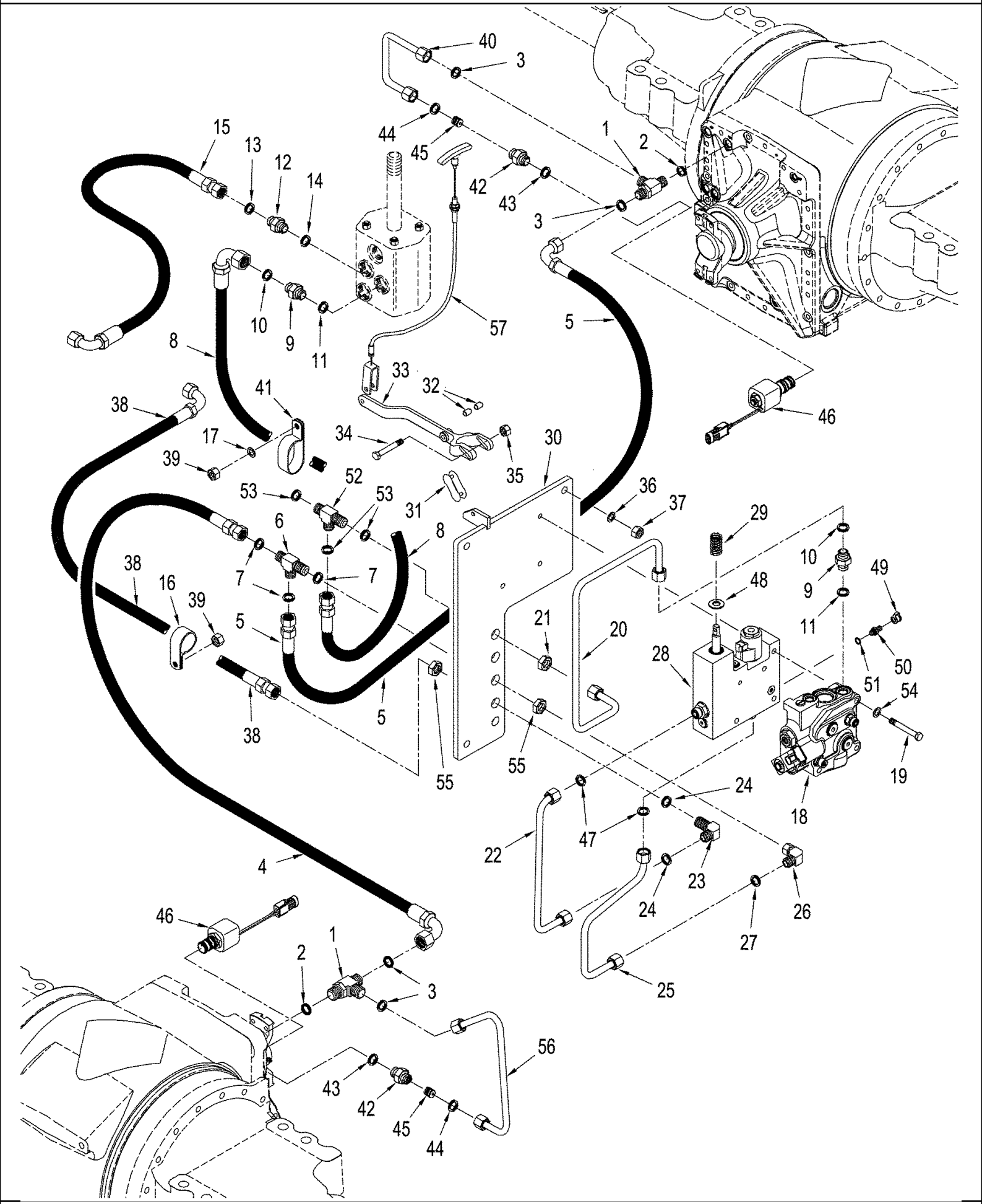

07-04(01) AXLE HYDRAULICS - PARK BRAKE CIRCUIT, WITH DIFFERENTIAL LOCKS (TJ375, TJ425 MANUAL SHIFT, TJ450)

ссылка	Номер детали	Кол-во	Описание
1	86639058	2	TEE, 13/16"-16 ORFS x M22 x 1.5 ORB Run, 13/16 fc sl x 22 orb, Inc. 2, 3
2	86639044	2	O-RING, Cl 6, 19.3MM ID x 2.2 Thk, 19.3 ID x 2.2 mm
3	9992298	4	O-RING, -014, 90 Duro, .489" ID x .070" Thk,
4	361955A1	1	HOSE ASSY., 2286 mm (90 in)
5	418814A1	1	HOSE, 2184 mm (86 in)
6	86639080	1	TEE, 13/16"-16 ORFS, Blkd Run, M12 fc sl x blkhd fc sl, Inc. 7
7	9992298	3	O-RING, -014, 90 Duro, .489" ID x .070" Thk,
8	418812A1	1	HOSE ASSY., 2286 mm (90 in)
9	86579679	2	CONNECTOR, HYD., 1"-14 ORFS x M18 x 1.5 ORB, 1 fc sl x M18 Or, Inc. 10, 11
10	9992069	2	O-RING, -016, 90 Duro, .614" ID x .070" Thk,
11	86639043	2	O-RING, 15.3 ID x 2.2
12	86579680	1	CONNECTOR, HYD., 1"-14 ORFS x M22 x 1.5 ORB, Includes 13, 14
13	9992069	1	O-RING, -016, 90 Duro, .614" ID x .070" Thk,
14	86639044	1	O-RING, Cl 6, 19.3MM ID x 2.2 Thk, 19.3 ID x 2.2 mm
15	335095A2	1	HOSE ASSY., 1050 mm (41 in)
16	86637979	1	CLAMP, 13/16", Insul, 3/8" Bolt, P-Type
17	86624184	1	WASHER, M8 x 16 x 1.6, 9 x 17 x 1.6 mm
18	411104A2	1	VALVE, Regulator, See Figure(s) : 08-22
19	43249	3	BOLT, Hex, M10 x 50, 10.9, Cap, HH, CL10.9, M10 x 1.5 x 50
20	413324A1	1	TUBE ASSY.,
21	86639085	1	NUT, LOCK, 1"-14, ORFS Blkhd, 1 in
22	413332A1	1	TUBE ASSY.,
23	86639079	1	ELBOW, 90є, 13/16"-16, ORFS, Blkhd, 90, 13/16 fc sl x blkhd, Inc. 24
24	9992298	2	O-RING, -014, 90 Duro, .489" ID x .070" Thk,
25	413330A1	1	TUBE ASSY.,
26	84989383	1	ELBOW, 90є, 13/16"-16 ORFS x 13/16"-16 Fem Sw, 90, 13/16 fc sl x swl, Inc. 27
27	9992298	1	O-RING, -014, 90 Duro, .489" ID x .070" Thk,
28	319774A4	1	VALVE, Control, Tow Block, See Figure(s) : 08-23
29	361897A1	1	SPRING,
30	413320A1	1	PLATE,
31	86637776	1	LINK, CHAIN,
32	392748A1	2	SPACER,
33	390918A3	1	ARM,
34	86639207	1	BOLT, Hex, M6 x 70, 10.9, M6 x 70; 10.9
35	412250	1	NUT, LOCK, M8 x 1.25, Cl 8, M6
36	86624177	3	WASHER, M12 x 24 x 2.5, 13.5 x 24 x 2.5 mm
37	337475	3	NUT, M12, Cl 10,
38	352114A1	1	HOSE, 1460 mm (57 in)
39	43362	4	NUT, M8, Cl 10,
40	416282A1	1	TUBE ASSY.,
41	L111928	1	CLAMP,
	341195A1	2	ORIFICE, Inc. 42 - 45
42	86579674	2	CONNECTOR, HYD., 13/16"-16 ORFS x M14 x 1.5 ORB, M14 orb x 13/16 fc sl, Inc. 43, 44
43	86639042	2	O-RING, Cl 6, 11.3MM ID x 2.2 Thk, 11.3 ID x 2.2 W
44	9992298	2	O-RING, -014, 90 Duro, .489" ID x .070" Thk,

07-04(01) AXLE HYDRAULICS - PARK BRAKE CIRCUIT, WITH DIFFERENTIAL LOCKS (TJ375, TJ425 MANUAL SHIFT, TJ450)

ссылка	Номер детали	Кол-во	Описание
45	NSS	1	NOT SERVICED SEPARATELY, Orifice, M8 x 12
46	384977A1	2	VALVE, Solenoid, Differential Lock, See Figure(s) : 08-51
47	9992298	2	O-RING, -014, 90 Duro, .489" ID x .070" Thk,
48	86639323	1	WASHER, M17.5 x 30 x 4, HT, 17.5 x 30 x 4 mm
	178889A1	1	FITTING, Diagnostic, Inc. 49, 50
49	86502604	1	DUST CAP, Dust
50	NSS	1	NOT SERVICED SEPARATELY, Fitting, Diagnostic, Inc. 51
51	86639042	1	O-RING, Cl 6, 11.3MM ID x 2.2 Thk, 11.3 ID x 2.2 W
52	86639081	1	TEE, 1"-14 ORFS, Blkd Run, 1 fc sl, Inc. 53
53	9992069	3	O-RING, -016, 90 Duro, .614" ID x .070" Thk,
54	86625251	3	WASHER, M10 x 18 x 1.6, 11 x 18 x 1.6 mm
55	86639083	3	NUT, LOCK, 13/16"-16, ORFS Blkhd, 13/16 in
56	416276A1	1	TUBE ASSY.,
57	349863A2	1	CABLE, Tow Valve, See Figure 08-47 for Mounting & Related Parts.

07-04(02) AXLE HYDRAULICS - PARK BRAKE CIRCUIT, WITH DIFFERENTIAL LOCKS (TJ375, TJ425 MANUAL SHIFT, TJ450)

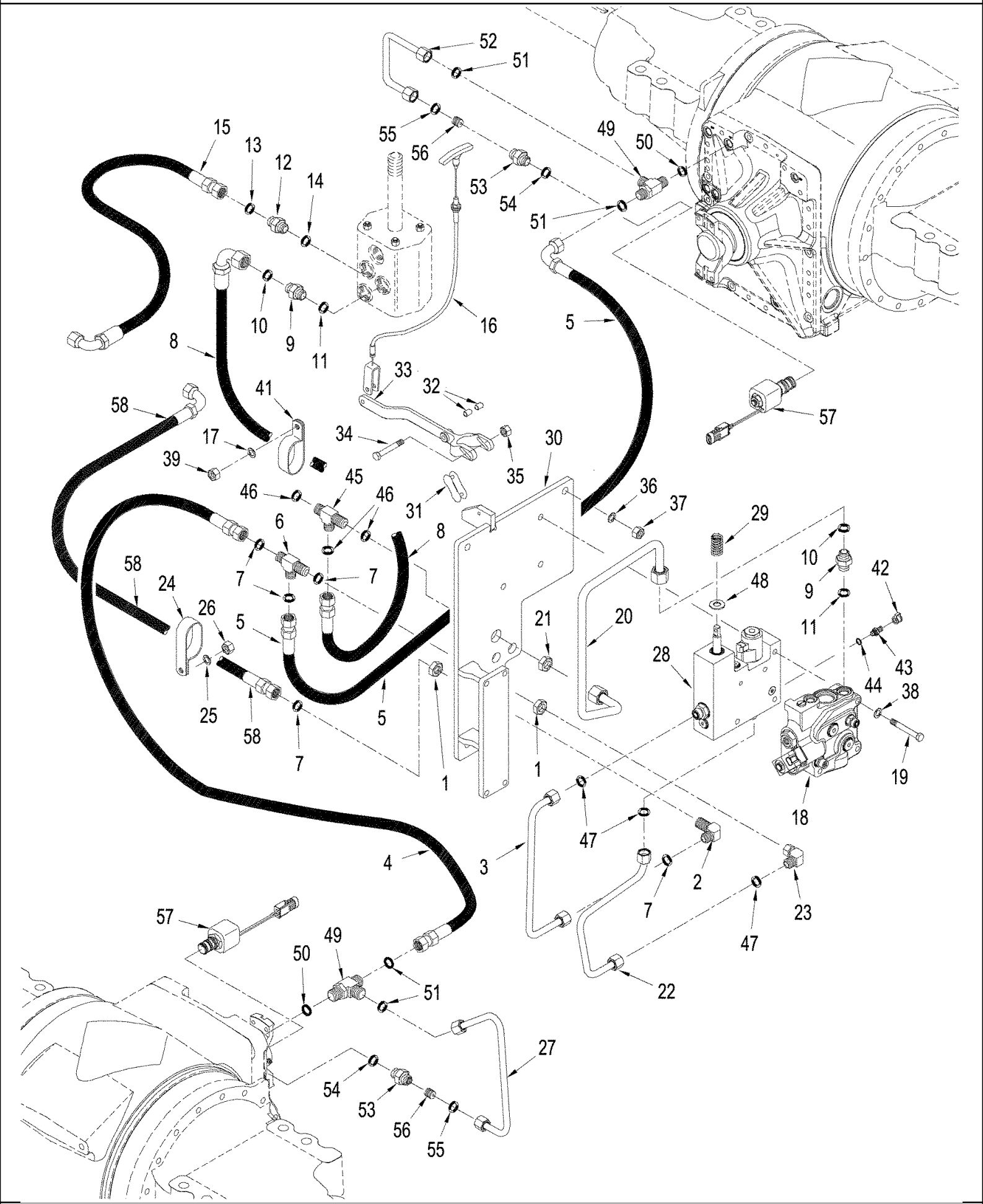

07-04(02) AXLE HYDRAULICS - PARK BRAKE CIRCUIT, WITH DIFFERENTIAL LOCKS (TJ375, TJ425 MANUAL SHIFT, TJ450)

ссылка	Номер детали	Кол-во	Описание
1	86639083	1	NUT, LOCK, 13/16"-16, ORFS Blkhd, 13/16 in
2	86639079	1	ELBOW, 90є, 13/16"-16, ORFS, Blkhd, 90, 13/16 fc sl x blkhd, Inc.7
3	449796A1	1	TUBE ASSY.,
4	361955A1	1	HOSE ASSY., 2286 mm (90 in)
5	418814A1	1	HOSE, 2184 mm (86 in)
6	86639080	1	TEE, 13/16"-16 ORFS, Blkd Run, M12 fc sl x blkhd fc sl, Inc. 7
7	9992298	5	O-RING, -014, 90 Duro, .489" ID x .070" Thk,
8	418812A1	1	HOSE ASSY., 2286 mm (90 in), BSN RVS001940
8	87416123	1	HOSE ASSY., 2286 mm (90 in), ASN RVS001940
9	86579679	2	CONNECTOR, HYD., 1"-14 ORFS x M18 x 1.5 ORB, 1 fc sl x M18 Or, Inc. 10, 11
10	9992069	2	O-RING, -016, 90 Duro, .614" ID x .070" Thk,
11	86639043	2	O-RING, 15.3 ID x 2.2
12	86579680	1	CONNECTOR, HYD., 1"-14 ORFS x M22 x 1.5 ORB, Includes 13, 14
13	9992069	1	O-RING, -016, 90 Duro, .614" ID x .070" Thk,
14	86639044	1	O-RING, Cl 6, 19.3MM ID x 2.2 Thk, 19.3 ID x 2.2 mm
15	335095A2	1	HOSE ASSY., 1050 mm (41 in)
17	86624184	2	WASHER, M8 x 16 x 1.6, 9 x 17 x 1.6 mm
16	349863A2	1	CABLE, Tow Valve, See Figure 08-47 for Mounting & Related Parts.
18	411104A2	1	VALVE, Regulator, See Figure(s) : 08-22
19	43249	3	BOLT, Hex, M10 x 50, 10.9, Cap, HH, CL10.9, M10 x 1.5 x 50
20	449827A1	1	TUBE ASSY.,
21	86639085	1	NUT, LOCK, 1"-14, ORFS Blkhd, 1 in
22	449798A1	1	TUBE ASSY.,
23	84989383	1	ELBOW, 90є, 13/16"-16 ORFS x 13/16"-16 Fem Sw, 90, 13/16 fc sl x swl, Inc. 47
24	R54363	2	CLAMP,
25	86624176	2	WASHER, M10 x 20 x 2, 11 x 21 x 2 mm
26	86500689	2	NUT, M10, Cl 10, M10; 10
27	416276A1	1	TUBE ASSY.,
28	319774A4	1	VALVE, Control, Tow Block, See Figure(s) : 08-23
29	361897A1	1	SPRING,
30	449830A1	1	PLATE ASSY.,
31	86637776	1	LINK, CHAIN,
32	392748A1	2	SPACER,
33	390918A3	1	ARM,
34	86639207	1	BOLT, Hex, M6 x 70, 10.9, M6 x 70; 10.9
35	412250	1	NUT, LOCK, M8 x 1.25, Cl 8, M6
36	86624177	3	WASHER, M12 x 24 x 2.5, 13.5 x 24 x 2.5 mm
37	337475	3	NUT, M12, Cl 10,
38	86625251	1	WASHER, M10 x 18 x 1.6, 11 x 18 x 1,6 mm
39	43362	4	NUT, M8, Cl 10,
41	L111928	1	CLAMP,
	178889A1	1	FITTING, Diagnostic, Inc. 42, 43
42	86502604	1	DUST CAP, Dust
43	NSS	1	NOT SERVICED SEPARATELY, Fitting, Diagnostic, Inc. 44
44	86639042	1	O-RING, Cl 6, 11.3MM ID x 2.2 Thk, 11.3 ID x 2.2 W

ASN RVS001801 TJ375, TJ425 Manual Shift, TJ450

07-04(02) AXLE HYDRAULICS - PARK BRAKE CIRCUIT, WITH DIFFERENTIAL LOCKS (TJ375, TJ425 MANUAL SHIFT, TJ450)

ссылка	Номер детали	Кол-во	Описание
45	86639081	1	TEE, 1"-14 ORFS, Blkd Run, 1 fc sl, Inc. 53
46	9992069	3	O-RING, -016, 90 Duro, .614" ID x .070" Thk,
47	9992298	4	O-RING, -014, 90 Duro, .489" ID x .070" Thk,
48	86639323	1	WASHER, M17.5 x 30 x 4, HT, 17.5 x 30 x 4 mm
49	86639058	2	TEE, 13/16"-16 ORFS x M22 x 1.5 ORB Run, M22 or x 13/16 fc sl, Inc. 50, 51
50	86639044	2	O-RING, Cl 6, 19.3MM ID x 2.2 Thk, 19,2 ID x 2,2 mm
51	9992298	4	O-RING, -014, 90 Duro, .489" ID x .070" Thk,
52	416282A1	1	TUBE ASSY.,
	341195A1	2	ORIFICE, Inc. 53 - 56
53	86579674	2	CONNECTOR, HYD., 13/16"-16 ORFS x M14 x 1.5 ORB, M14 orb x 13/16 fc sl, Inc. 54, 57
54	86639042	2	O-RING, Cl 6, 11.3MM ID x 2.2 Thk, 11.3 ID x 2.2 W
55	9992298	2	O-RING, -014, 90 Duro, .489" ID x .070" Thk,
56	NSS	1	NOT SERVICED SEPARATELY, Orifice, M8 x 12
57	384977A1	2	VALVE, Solenoid, Differential Lock, See Figure(s) : 08-51

07-04(03) AXLE HYDRAULICS - PARK BRAKE CIRCUIT, WITH DIFFERENTIAL LOCKS (TJ375 HD, TJ425 POWER SHIFT, TJ450)

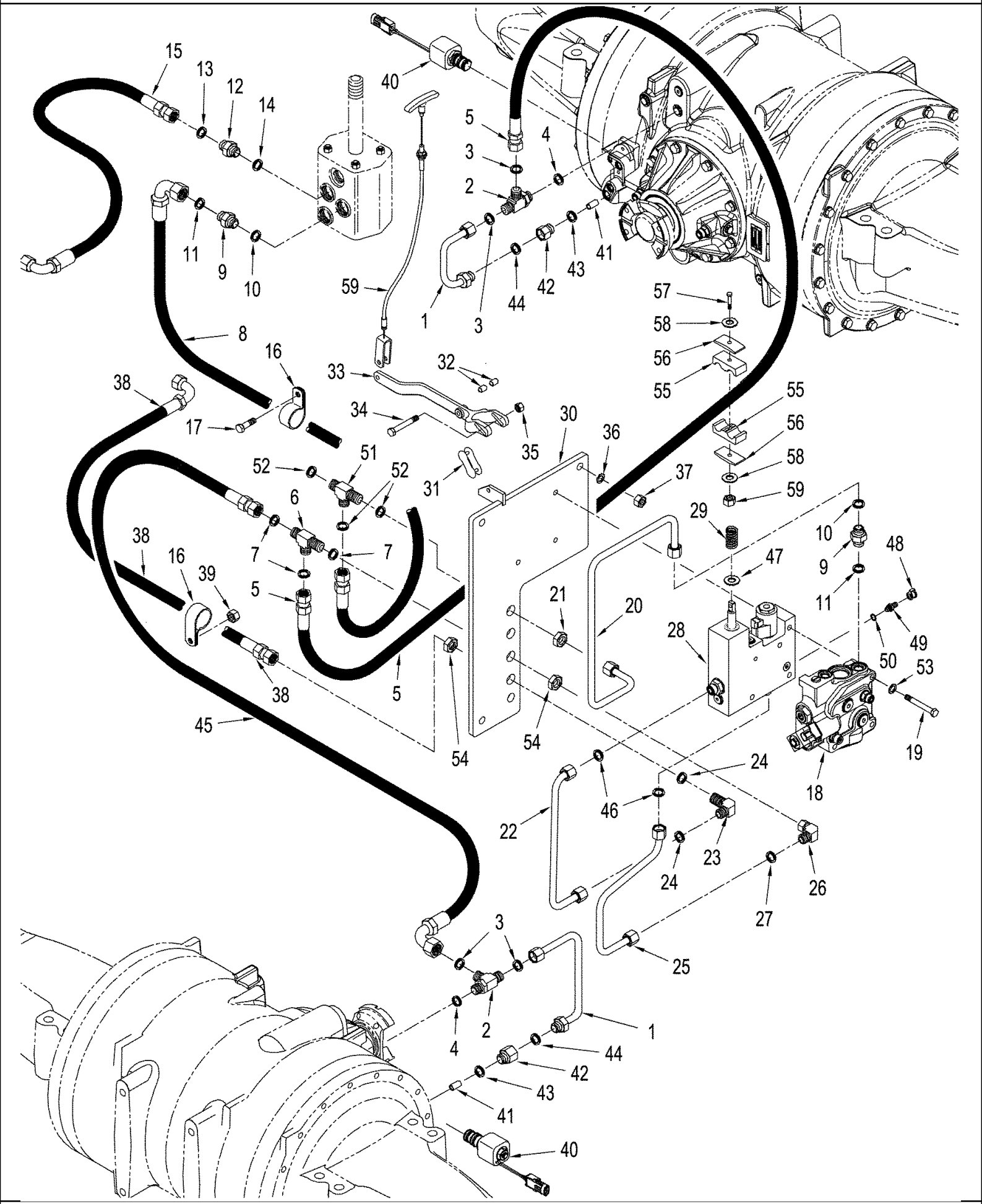

07-04(03) AXLE HYDRAULICS - PARK BRAKE CIRCUIT, WITH DIFFERENTIAL LOCKS (TJ375 HD, TJ425 POWER SHIFT, TJ450)

ссылка	Номер детали	Кол-во	Описание
1	416697A1	2	TUBE ASSY.,
2	86639058	2	TEE, 13/16"-16 ORFS x M22 x 1.5 ORB Run, 13/16 fc sl x 22 orb, Inc. 3
3	9992298	4	O-RING, -014, 90 Duro, .489" ID x .070" Thk,
4	86639044	2	O-RING, Cl 6, 19.3MM ID x 2.2 Thk, 19.3 ID x 2.2 mm
5	428171A1	1	HOSE ASSY., 2235 mm (88 in)
6	86639080	1	TEE, 13/16"-16 ORFS, Blkd Run, M12 fc sl x blkhd fc sl
7	9992298	3	O-RING, -014, 90 Duro, .489" ID x .070" Thk,
8	418812A1	1	HOSE ASSY., 2286 mm (90 in)
9	86579679	2	CONNECTOR, HYD., 1"-14 ORFS x M18 x 1.5 ORB, 1 fc sl x M18 Or, Inc. 10, 11
10	9992069	2	O-RING, -016, 90 Duro, .614" ID x .070" Thk,
11	86639043	2	O-RING, 15.3 ID x 2.2
12	86579680	1	CONNECTOR, HYD., 1"-14 ORFS x M22 x 1.5 ORB, Includes 13, 14
13	9992069	1	O-RING, -016, 90 Duro, .614" ID x .070" Thk,
14	86639044	1	O-RING, Cl 6, 19.3MM ID x 2.2 Thk, 19.3 ID x 2.2 mm
15	335095A2	1	HOSE ASSY., 1050 mm (41 in)
16	86637979	4	CLAMP, 13/16", Insul, 3/8" Bolt, P-type
17	43233	1	BOLT, Hex, M8 x 20, 10.9, Cap, HH, CL 10.9, M8 x 1.25 x 20
18	411104A2	1	VALVE, Regulator, See Figure(s) : 08-22
19	86639150	3	BOLT, Hex, M10 x 150, 10.9, M10 x 150; 10.9
20	413324A1	1	TUBE ASSY.,
21	86639085	1	NUT, LOCK, 1"-14, ORFS Blkhd, 1 in
22	413332A1	1	TUBE ASSY.,
23	86639079	1	ELBOW, 90є, 13/16"-16, ORFS, Blkhd, 90, 13/16 fc sl x blkhd, Inc. 24
24	9992298	2	O-RING, -014, 90 Duro, .489" ID x .070" Thk,
25	413330A1	1	TUBE ASSY.,
26	84989383	1	ELBOW, 90є, 13/16"-16 ORFS x 13/16"-16 Fem Sw, 90, 13/16 fc sl x swl, Inc. 27
27	9992298	1	O-RING, -014, 90 Duro, .489" ID x .070" Thk,
28	319774A4	1	VALVE, Control, Tow Block, See Figure(s) : 08-23
29	361897A1	1	SPRING,
30	413320A1	1	PLATE,
31	86637776	1	LINK, CHAIN,
32	392748A1	2	SPACER,
33	390918A3	1	ARM,
34	86639207	1	BOLT, Hex, M6 x 70, 10.9, M6 x 70; 10.9
35	412250	1	NUT, LOCK, M8 x 1.25, Cl 8, M6
36	86624177	3	WASHER, M12 x 24 x 2.5, 13.5 x 24 x 2.5 mm
37	337475	3	NUT, M12, Cl 10,
38	352114A1	1	HOSE, 1460 mm (57 in)
39	43362	3	NUT, M8, Cl 10,
40	384977A1	2	VALVE, Solenoid, Differential Lock, See Figure(s): 08-51
	341195A1	2	ORIFICE, Inc. 41, 42
41	86639306	2	SET SCREW, Hex Soc, M8 x 12, Cup Pt, M8 x 12
42	86579674	2	CONNECTOR, HYD., 13/16"-16 ORFS x M14 x 1.5 ORB, M14 orb x 13/16 fc sl, Inc. 43, 44
43	86639042	2	O-RING, Cl 6, 11.3MM ID x 2.2 Thk, 11.3 ID x 2.2
44	86624184	2	WASHER, M8 x 16 x 1.6, 9 x 17 x 1,6 mm

07-04(03) AXLE HYDRAULICS - PARK BRAKE CIRCUIT, WITH DIFFERENTIAL LOCKS (TJ375 HD, TJ425 POWER SHIFT, TJ450)

ссылка	Номер детали	Кол-во	Описание
45	352112A3	1	HOSE ASSY., 2336 mm (92 in)
46	9992298	2	O-RING, -014, 90 Duro, .489" ID x .070" Thk,
47	86639323	1	WASHER, M17.5 x 30 x 4, HT, 17.5 x 30 x 4 mm
	178889A1	1	FITTING, Diagnostic, Inc. 48, 49
48	86502604	1	DUST CAP, Dust
49	NSS	1	NOT SERVICED SEPARATELY, Fitting, Diagnostic, Inc. 50
50	86639042	1	O-RING, Cl 6, 11.3MM ID x 2.2 Thk, 11.3 ID x 2.2
51	86639081	1	TEE, 1"-14 ORFS, Blkd Run, 1 fc sl, Inc. 52
52	9992069	3	O-RING, -016, 90 Duro, .614" ID x .070" Thk,
53	86625251	3	WASHER, M10 x 18 x 1.6, 11 x 18 x 1.6 mm
54	86639083	3	NUT, LOCK, 13/16"-16, ORFS Blkhd, 13/16 in
55	435470A1	2	CLAMP,
56	435468A1	2	PLATE,
57	84042348	1	BOLT, Hex, M8 x 70, 10.9, Cap, HH, CL 10.9, M8 x 1.25 x 70
58	86624184	2	WASHER, M8 x 16 x 1.6, 9 x 17 x 1.6 mm
59	349863A2	1	CABLE, Tow Valve, See Figure 08-47 for Mounting & Related Parts.

07-04(04) AXLE HYDRAULICS - PARK BRAKE CIRCUIT, WITH DIFFERENTIAL LOCKS (TJ375 HD, 425 POWER SHIFT, 450, 500)

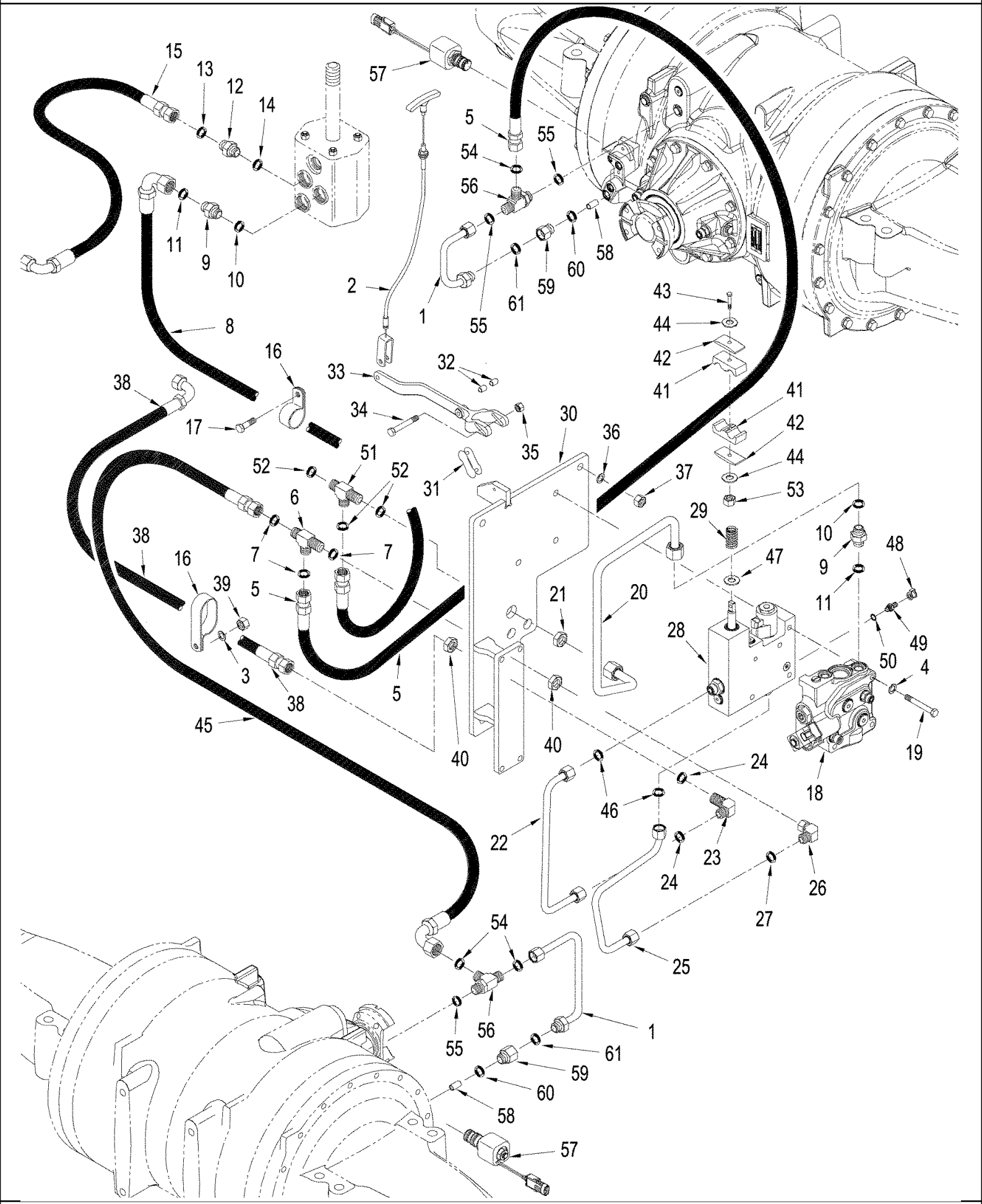

07-04(04) AXLE HYDRAULICS - PARK BRAKE CIRCUIT, WITH DIFFERENTIAL LOCKS (TJ375 HD, 425 POWER SHIFT, 450, 500)

ссылка	Номер детали	Кол-во	Описание
1	416697A1	2	TUBE ASSY.,
2	349863A2	1	CABLE, Tow Valve, See Figure 08-47 for Mounting & Related Parts.
3	86624176	2	WASHER, M10 x 20 x 2, 11 x 21 x 2 mm
4	86625251	3	WASHER, M10 x 18 x 1.6, 11 x 18 x 1,6 mm
5	428171A1	1	HOSE ASSY., 2235 mm (88 in)
6	86639080	1	TEE, 13/16"-16 ORFS, Blkd Run, M12 fc sl x blkhd fc sl
7	9992298	3	O-RING, -014, 90 Duro, .489" ID x .070" Thk,
8	418812A1	1	HOSE ASSY., 2286 mm (90 in), BSN RVS001940
8	87416123	1	HOSE ASSY., 2286 mm (90 in), ASN RVS001940
9	86579679	2	CONNECTOR, HYD., 1"-14 ORFS x M18 x 1.5 ORB, 1 fc sl x M18 Or, Inc. 10, 11
10	9992069	2	O-RING, -016, 90 Duro, .614" ID x .070" Thk,
11	86639043	2	O-RING, 15.3 ID x 2.2
12	86579680	1	CONNECTOR, HYD., 1"-14 ORFS x M22 x 1.5 ORB, Includes 13, 14
13	9992069	1	O-RING, -016, 90 Duro, .614" ID x .070" Thk,
14	86639044	1	O-RING, Cl 6, 19.3MM ID x 2.2 Thk, 19.3 ID x 2.2 mm
15	335095A2	1	HOSE ASSY., 1050 mm (41 in)
16	R54363	2	CLAMP, P-type
17	43233	1	BOLT, Hex, M8 x 20, 10.9, Cap, HH, CL 10.9, M8 x 1.25 x 20
18	411104A2	1	VALVE, Regulator, See Figure(s) : 08-22
19	86639150	3	BOLT, Hex, M10 x 150, 10.9, M10 x 150; 10.9
20	449827A1	1	TUBE ASSY.,
21	86639085	1	NUT, LOCK, 1"-14, ORFS Blkhd, 1 in
22	449796A1	1	TUBE ASSY.,
23	86639079	1	ELBOW, 90є, 13/16"-16, ORFS, Blkhd, 90, 13/16 fc sl x blkhd, Inc. 24
24	9992298	2	O-RING, -014, 90 Duro, .489" ID x .070" Thk,
25	449798A1	1	TUBE ASSY.,
26	84989383	1	ELBOW, 90є, 13/16"-16 ORFS x 13/16"-16 Fem Sw, 90, 13/16 fc sl x swl, Inc. 27
27	9992298	1	O-RING, -014, 90 Duro, .489" ID x .070" Thk,
28	319774A4	1	VALVE, Control, Tow Block, See Figure(s) : 08-23
29	361897A1	1	SPRING,
30	449830A1	1	PLATE ASSY.,
31	86637776	1	LINK, CHAIN,
32	392748A1	2	SPACER,
33	390918A3	1	ARM,
34	86639207	1	BOLT, Hex, M6 x 70, 10.9, M6 x 70; 10.9
35	412250	1	NUT, LOCK, M8 x 1.25, Cl 8, M6
36	86624177	3	WASHER, M12 x 24 x 2.5, 13.5 x 24 x 2.5 mm
37	337475	3	NUT, M12, Cl 10,
38	87414079	1	HOSE ASSY.,
39	86500689	2	NUT, M10, Cl 10, M10; 10
40	86639083	3	NUT, LOCK, 13/16"-16, ORFS Blkhd, 13/16 in
41	435470A1	2	CLAMP,
42	435468A1	2	PLATE,
43	84042348	1	BOLT, Hex, M8 x 70, 10.9, Cap, HH, CL 10.9, M8 x 1.25 x 70
44	86624184	2	WASHER, M8 x 16 x 1.6, 9 x 17 x 1.6 mm

ASN RVS001801 TJ375HD, 425 Power Shift, 450, 500

07-04(04) AXLE HYDRAULICS - PARK BRAKE CIRCUIT, WITH DIFFERENTIAL LOCKS (TJ375 HD, 425 POWER SHIFT, 450, 500)

ссылка	Номер детали	Кол-во	Описание
45	352112A3	1	HOSE ASSY., 2336 mm (92 in)
46	9992298	2	O-RING, -014, 90 Duro, .489" ID x .070" Thk,
47	86639323	1	WASHER, M17.5 x 30 x 4, HT, 17.5 x 30 x 4 mm
	178889A1	1	FITTING, Diagnostic, Inc. 48, 49
48	86502604	1	DUST CAP, Dust
49	NSS	1	NOT SERVICED SEPARATELY, Fitting, Diagnostic, Inc. 50
50	86639042	1	O-RING, Cl 6, 11.3MM ID x 2.2 Thk, 11.3 ID x 2.2
51	86639081	1	TEE, 1"-14 ORFS, Blkd Run, 1 fc sl, Inc. 52
52	9992069	3	O-RING, -016, 90 Duro, .614" ID x .070" Thk,
53	43362	1	NUT, M8, Cl 10,
54	9992298	4	O-RING, -014, 90 Duro, .489" ID x .070" Thk,
55	86639044	2	O-RING, Cl 6, 19.3MM ID x 2.2 Thk, 19,3 ID x 2,2 mm
56	86639058	2	TEE, 13/16"-16 ORFS x M22 x 1.5 ORB Run, M22 or x 13/16 fc sl, Inc. 54, 55
57	384977A1	2	VALVE, Solenoid, Differential Lock, See Figure(s): 08-51
	341195A1	2	ORIFICE, Inc. 58, 59
58	86639306	2	SET SCREW, Hex Soc, M8 x 12, Cup Pt, M8 x 12
59	86579674	2	CONNECTOR, HYD., 13/16"-16 ORFS x M14 x 1.5 ORB, M14 orb x 13/16 fc sl, Inc. 60, 61
60	86639042	2	O-RING, Cl 6, 11.3MM ID x 2.2 Thk, 11.3 ID x 2.2
61	9992298	2	O-RING, -014, 90 Duro, .489" ID x .070" Thk,

07-05(01) AXLE HYDRAULICS - PARK BRAKE CIRCUIT, WITHOUT DIFFERENTIAL LOCKS (TJ375,TJ425 MANUAL SHIFT, TJ450)

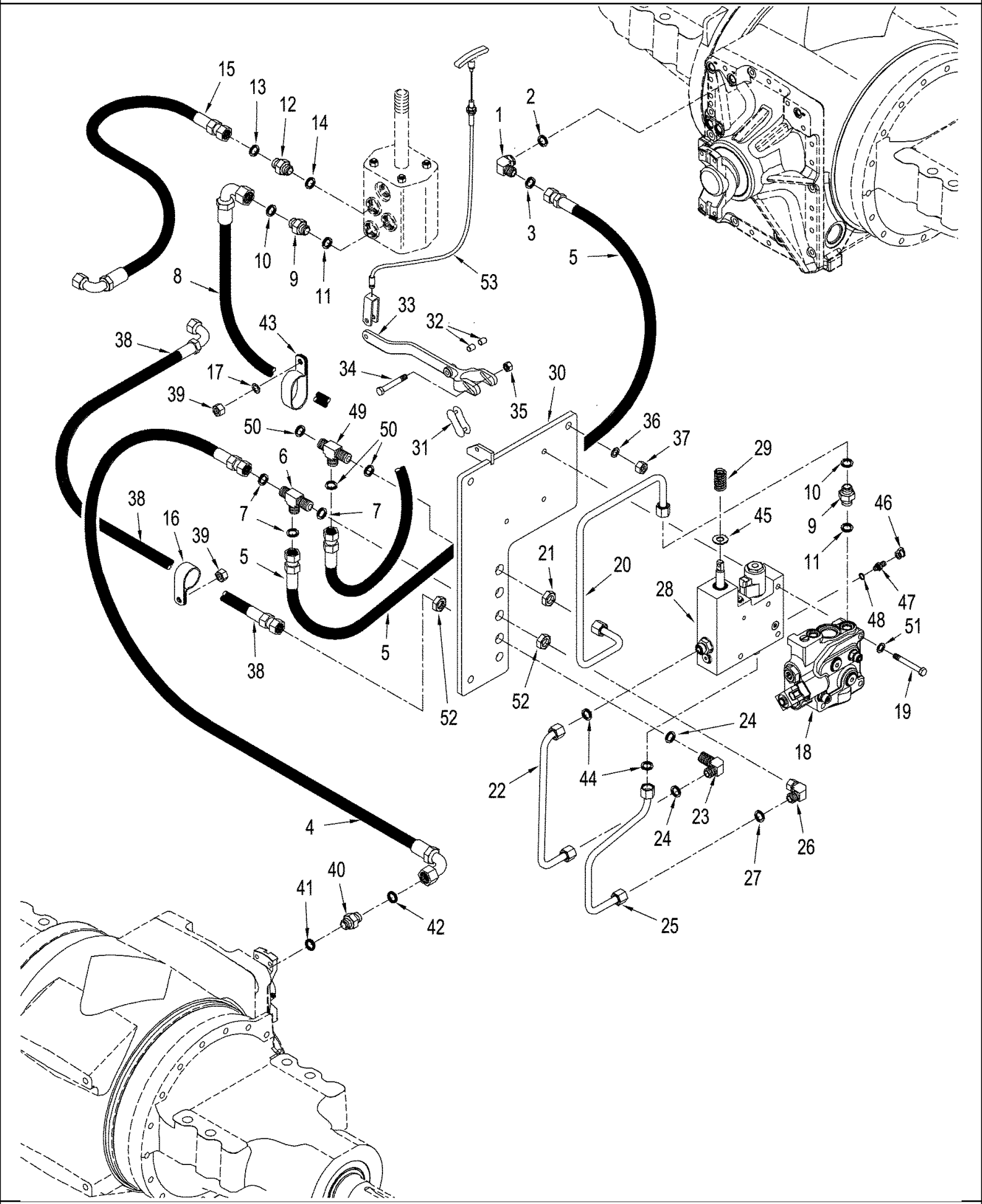

07-05(01) AXLE HYDRAULICS - PARK BRAKE CIRCUIT, WITHOUT DIFFERENTIAL LOCKS (TJ375,TJ425 MANUAL SHIFT, TJ450)

ссылка	Номер детали	Кол-во	Описание
1	86579692	1	ELBOW, 90є, 13/16"-18 ORFS x M22 x 1.5 ORB, 13/16 fc sl x 22 or, Inc. 2, 3
2	86639044	1	O-RING, Cl 6, 19.3MM ID x 2.2 Thk, 19.3 ID x 2.2 mm
3	9992298	1	O-RING, -014, 90 Duro, .489" ID x .070" Thk,
4	361955A1	1	HOSE ASSY., 2286 mm (90 in)
5	382095A2	1	HOSE, 2089 mm (82 in)
6	86639080	1	TEE, 13/16"-16 ORFS, Blkd Run, M12 fc sl x blkhd fc sl, Inc. 7
7	9992298	3	O-RING, -014, 90 Duro, .489" ID x .070" Thk,
8	418812A1	1	HOSE ASSY., 2286 mm (90 in)
9	86579679	2	CONNECTOR, HYD., 1"-14 ORFS x M18 x 1.5 ORB, 1 fc sl x M18 Or, Inc. 10, 11
10	9992069	2	O-RING, -016, 90 Duro, .614" ID x .070" Thk,
11	86639043	2	O-RING, 15.3 ID x 2.2
12	86579680	1	CONNECTOR, HYD., 1"-14 ORFS x M22 x 1.5 ORB, Includes 13, 14
13	9992069	1	O-RING, -016, 90 Duro, .614" ID x .070" Thk,
14	86639044	1	O-RING, Cl 6, 19.3MM ID x 2.2 Thk, 19.3 ID x 2.2 mm
15	335095A2	1	HOSE ASSY., 1050 mm (41 in)
16	86637979	3	CLAMP, 13/16", Insul, 3/8" Bolt, P-type
17	86624184	1	WASHER, M8 x 16 x 1.6, 9 x 17 x 1.6 mm
18	411104A2	1	VALVE, Regulator, See Figure(s) : 08-22
19	86639150	3	BOLT, Hex, M10 x 150, 10.9, M10 x 150; 10.9
20	413324A1	1	TUBE ASSY.,
21	86639085	1	NUT, LOCK, 1"-14, ORFS Blkhd, 1 in
22	413332A1	1	TUBE ASSY.,
23	86639079	1	ELBOW, 90є, 13/16"-16, ORFS, Blkhd, 90, 13/16 fc sl x blkhd, Inc. 24
24	9992298	2	O-RING, -014, 90 Duro, .489" ID x .070" Thk,
25	413330A1	1	TUBE ASSY.,
26	84989383	1	ELBOW, 90є, 13/16"-16 ORFS x 13/16"-16 Fem Sw, 90, 13/16 fc sl x swl, Inc. 27
27	9992298	1	O-RING, -014, 90 Duro, .489" ID x .070" Thk,
28	319774A4	1	VALVE, Control, Tow Block, See Figure(s) : 08-23
29	361897A1	1	SPRING,
30	413320A1	1	PLATE,
31	86637776	1	LINK, CHAIN,
32	392748A1	2	SPACER,
33	390918A3	1	ARM,
34	86639207	1	BOLT, Hex, M6 x 70, 10.9, M6 x 70; 10.9
35	412250	1	NUT, LOCK, M8 x 1.25, Cl 8, M6
36	86624177	3	WASHER, M12 x 24 x 2.5, 13.5 x 24 x 2.5 mm
37	337475	3	NUT, M12, Cl 10,
38	352114A1	1	HOSE, 1460 mm (57 in)
39	43362	4	NUT, M8, Cl 10,
40	86579678	1	CONNECTOR, HYD., 13/16"-16 ORFS x M22 x 1.5 ORB, 13/16 fc sl x 22 or, Inc. 41, 42
41	86639044	1	O-RING, Cl 6, 19.3MM ID x 2.2 Thk, 19.3 ID x 2.2 mm
42	9992298	2	O-RING, -014, 90 Duro, .489" ID x .070" Thk,
43	L111928	1	CLAMP,
44	9992298	2	O-RING, -014, 90 Duro, .489" ID x .070" Thk,
45	86639323	1	WASHER, M17.5 x 30 x 4, HT, 17.5 x 30 x 4 mm

07-05(01) AXLE HYDRAULICS - PARK BRAKE CIRCUIT, WITHOUT DIFFERENTIAL LOCKS (TJ375,TJ425 MANUAL SHIFT, TJ450)

ссылка	Номер детали	Кол-во	Описание
	178889A1	1	FITTING, Diagnostic, Inc. 46, 47
46	143349A1	1	CAP, Dust
47	9992298	1	O-RING, -014, 90 Duro, .489" ID x .070" Thk, Includes 48
48	86639042	1	O-RING, Cl 6, 11.3MM ID x 2.2 Thk, 11.3 ID x 2.2
49	86639081	1	TEE, 1"-14 ORFS, Blkd Run, 1 fc sl, Inc. 50
50	9992069	3	O-RING, -016, 90 Duro, .614" ID x .070" Thk,
51	86625251	3	WASHER, M10 x 18 x 1.6, 11 x 18 x 1.6 mm
52	86639083	3	NUT, LOCK, 13/16"-16, ORFS Blkhd, 13/16 in
53	349863A2	1	CABLE, Tow Valve, See Figure 08-47 for Mounting & Related Parts.

07-05(02) AXLE HYDRAULICS - PARK BRAKE CIRCUIT, WITHOUT DIFFERENTIAL LOCKS (TJ375, TJ425 MANUAL SHIFT, TJ450)

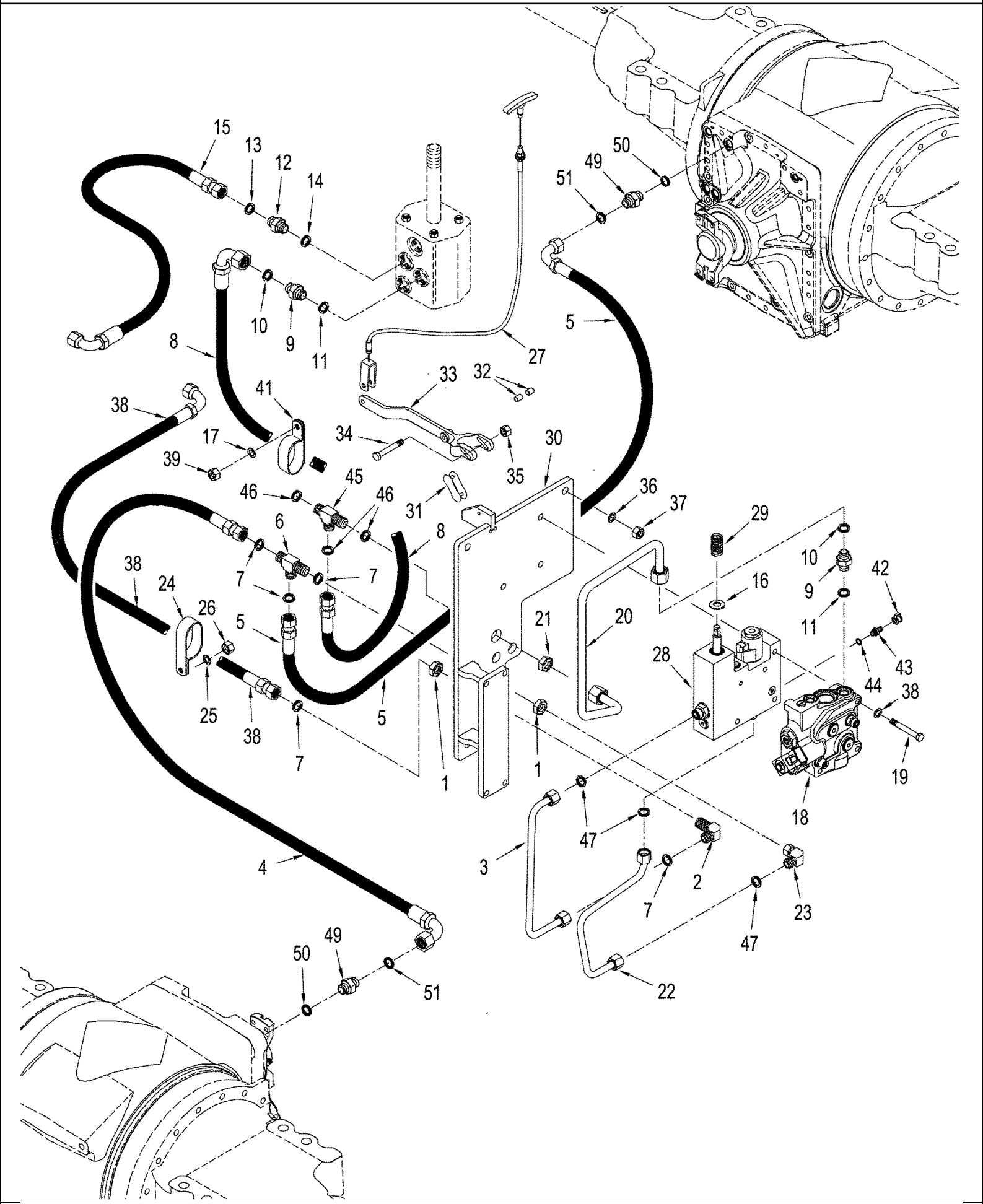

07-05(02) AXLE HYDRAULICS - PARK BRAKE CIRCUIT, WITHOUT DIFFERENTIAL LOCKS (TJ375, TJ425 MANUAL SHIFT, TJ450)

ссылка	Номер детали	Кол-во	Описание
1	86639083	1	NUT, LOCK, 13/16"-16, ORFS Blkhd, 13/16 in
2	86639079	1	ELBOW, 90є, 13/16"-16, ORFS, Blkhd, 90, 13/16 fc sl x blkhd, Inc.7
3	449796A1	1	TUBE ASSY.,
4	361955A1	1	HOSE ASSY., 2286 mm (90 in)
5	418814A1	1	HOSE, 2184 mm (86 in)
6	86639080	1	TEE, 13/16"-16 ORFS, Blkd Run, M12 fc sl x blkhd fc sl, Inc. 7
7	9992298	5	O-RING, -014, 90 Duro, .489" ID x .070" Thk,
8	418812A1	1	HOSE ASSY., 2286 mm (90 in), BSN RVS001940
8	87416123	1	HOSE ASSY., 2286 mm (90 in), ASN RVS001940
9	86579679	2	CONNECTOR, HYD., 1"-14 ORFS x M18 x 1.5 ORB, 1 fc sl x M18 Or, Inc. 10, 11
10	9992069	2	O-RING, -016, 90 Duro, .614" ID x .070" Thk,
11	86639043	2	O-RING, 15.3 ID x 2.2
12	86579680	1	CONNECTOR, HYD., 1"-14 ORFS x M22 x 1.5 ORB, Includes 13, 14
13	9992069	1	O-RING, -016, 90 Duro, .614" ID x .070" Thk,
14	86639044	1	O-RING, Cl 6, 19.3MM ID x 2.2 Thk, 19.3 ID x 2.2 mm
15	335095A2	1	HOSE ASSY., 1050 mm (41 in)
16	86639323	1	WASHER, M17.5 x 30 x 4, HT, 17.5 x 30 x 4 mm
17	86624184	2	WASHER, M8 x 16 x 1.6, 9 x 17 x 1.6 mm
18	411104A2	1	VALVE, Regulator, See Figure(s) : 08-22
19	43249	3	BOLT, Hex, M10 x 50, 10.9, Cap, HH, CL10.9, M10 x 1.5 x 50
20	449827A1	1	TUBE ASSY.,
21	86639085	1	NUT, LOCK, 1"-14, ORFS Blkhd, 1 in
22	449798A1	1	TUBE ASSY.,
23	84989383	1	ELBOW, 90є, 13/16"-16 ORFS x 13/16"-16 Fem Sw, 90, 13/16 fc sl x swl, Inc. 47
24	R54363	2	CLAMP,
25	86624176	2	WASHER, M10 x 20 x 2, 11 x 21 x 2 mm
26	86500689	2	NUT, M10, Cl 10, M10; 10
27	349863A2	1	CABLE, Tow Valve, See Figure 08-47 for Mounting & Related Parts.
28	319774A4	1	VALVE, Control, Tow Block, See Figure(s) : 08-23
29	361897A1	1	SPRING,
30	449830A1	1	PLATE ASSY.,
31	86637776	1	LINK, CHAIN,
32	392748A1	2	SPACER,
33	390918A3	1	ARM,
34	86639207	1	BOLT, Hex, M6 x 70, 10.9, M6 x 70; 10.9
35	412250	1	NUT, LOCK, M8 x 1.25, Cl 8, M6
36	86624177	3	WASHER, M12 x 24 x 2.5, 13.5 x 24 x 2.5 mm
37	337475	3	NUT, M12, Cl 10,
38	86625251	1	WASHER, M10 x 18 x 1.6, 11 x 18 x 1,6 mm
39	43362	4	NUT, M8, Cl 10,
41	L111928	1	CLAMP,
	178889A1	1	FITTING, Diagnostic, Inc. 42, 43
42	86502604	1	DUST CAP, Dust
43	NSS	1	NOT SERVICED SEPARATELY, Fitting, Diagnostic, Inc. 44
44	86639042	1	O-RING, Cl 6, 11.3MM ID x 2.2 Thk, 11.3 ID x 2.2 W

ASN RVS001801 TJ375, TJ425 Manual Shift

07-05(02) AXLE HYDRAULICS - PARK BRAKE CIRCUIT, WITHOUT DIFFERENTIAL LOCKS (TJ375, TJ425 MANUAL SHIFT, TJ450)

ссылка	Номер детали	Кол-во	Описание
45	86639081	1	TEE, 1"-14 ORFS, Blkd Run, 1 fc sl, Inc. 53
46	9992069	3	O-RING, -016, 90 Duro, .614" ID x .070" Thk,
47	9992298	4	O-RING, -014, 90 Duro, .489" ID x .070" Thk,
49	86579678	2	CONNECTOR, HYD., 13/16"-16 ORFS x M22 x 1.5 ORB, M22 or x 13/16 fc sl, Inc. 50, 51
50	86639044	2	O-RING, Cl 6, 19.3MM ID x 2.2 Thk, 19,2 ID x 2,2 mm
51	9992298	4	O-RING, -014, 90 Duro, .489" ID x .070" Thk,

07-05(03) AXLE HYDRAULICS - PARK BRAKE CIRCUIT, WITHOUT DIFFERENTIAL LOCKS (TJ375 HD,TJ425 POWER SHIFT, TJ450

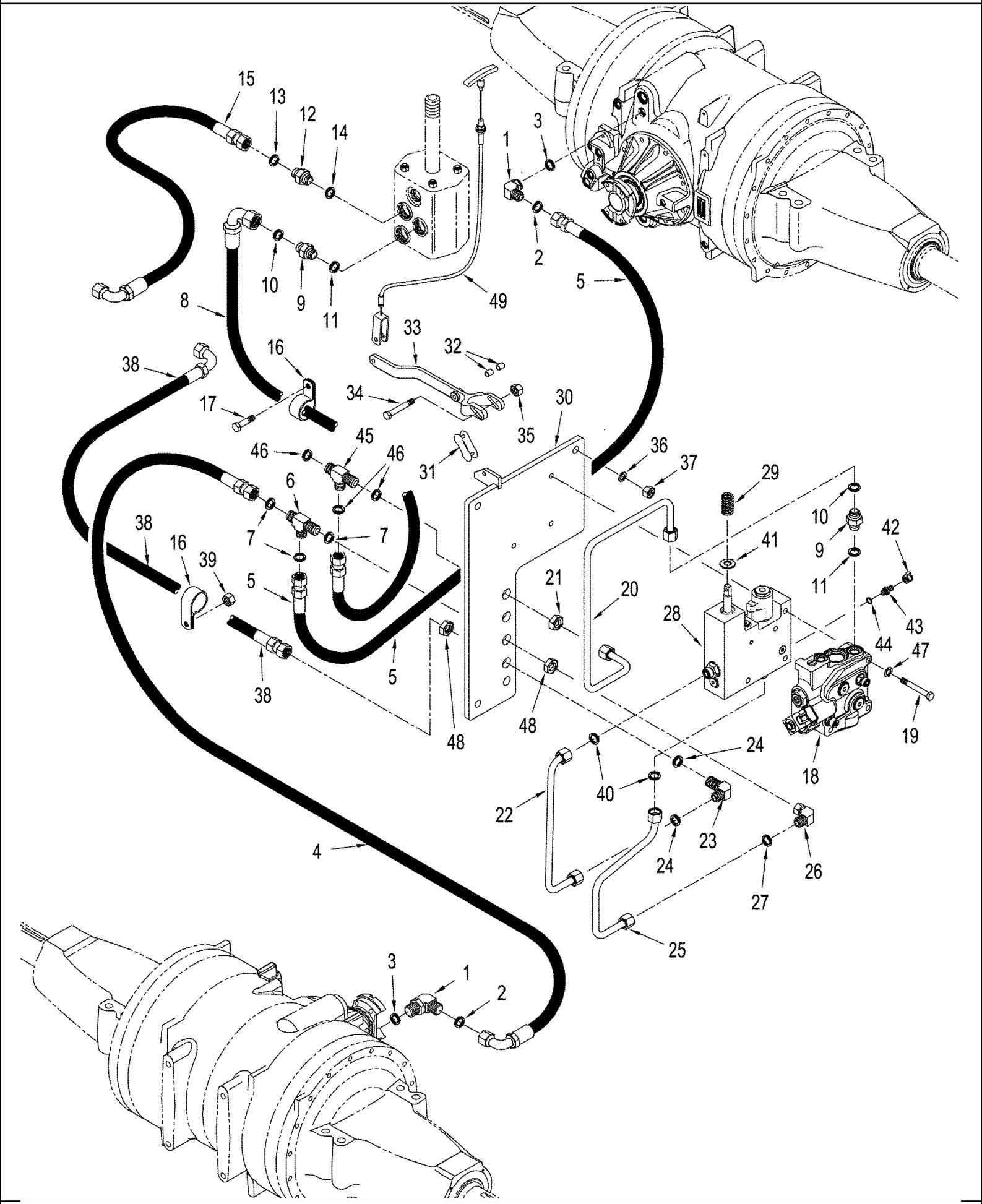

07-05(03) AXLE HYDRAULICS - PARK BRAKE CIRCUIT, WITHOUT DIFFERENTIAL LOCKS (TJ375 HD,TJ425 POWER SHIFT, TJ450

ссылка	Номер детали	Кол-во	Описание
1	86579692	2	ELBOW, 90є, 13/16"-18 ORFS x M22 x 1.5 ORB, 90, 13/16 fc sl x 22 or, Inc. 2, 3
2	9992298	2	O-RING, -014, 90 Duro, .489" ID x .070" Thk,
3	86639044	2	O-RING, Cl 6, 19.3MM ID x 2.2 Thk, 19,3 ID x 2,2 mm
4	352112A3	1	HOSE ASSY., 2336 mm (92 in)
5	428171A1	1	HOSE ASSY., 2235 mm (88 in)
6	86639080	1	TEE, 13/16"-16 ORFS, Blkd Run, M12 fc sl x blkhd fc sl, Inc. 7
7	9992298	3	O-RING, -014, 90 Duro, .489" ID x .070" Thk,
8	418812A1	1	HOSE ASSY., 2286 mm (90 in)
9	86579679	2	CONNECTOR, HYD., 1"-14 ORFS x M18 x 1.5 ORB, 1 fc sl x M18 Or, Inc. 10, 11
10	9992069	2	O-RING, -016, 90 Duro, .614" ID x .070" Thk,
11	86639043	2	O-RING, 15,3 ID x 2,2
12	86579680	1	CONNECTOR, HYD., 1"-14 ORFS x M22 x 1.5 ORB, Includes 13, 14
13	9992069	1	O-RING, -016, 90 Duro, .614" ID x .070" Thk,
14	86639044	1	O-RING, Cl 6, 19.3MM ID x 2.2 Thk, 19,3 ID x 2,2 mm
15	335095A2	1	HOSE ASSY., 1050 mm (41 in)
16	86637979	4	CLAMP, 13/16", Insul, 3/8" Bolt, P-type
17	43233	1	BOLT, Hex, M8 x 20, 10.9, Cap, HH, CL 10.9, M8 x 1.25 x 20
18	411104A2	1	VALVE, Regulator, See Figure(s) : 08-22
19	86639150	3	BOLT, Hex, M10 x 150, 10.9, M10 x 150; 10.9
20	413324A1	1	TUBE ASSY.,
21	86639085	1	NUT, LOCK, 1"-14, ORFS Blkhd, 1 in
22	413332A1	1	TUBE ASSY.,
23	86639079	1	ELBOW, 90є, 13/16"-16, ORFS, Blkhd, 90, 13/16 fc sl x blkhd, Inc. 24
24	9992298	2	O-RING, -014, 90 Duro, .489" ID x .070" Thk,
25	413330A1	1	TUBE ASSY.,
26	84989383	1	ELBOW, 90є, 13/16"-16 ORFS x 13/16"-16 Fem Sw, 90, 13/16 fc sl x swl, Inc. 27
27	9992298	1	O-RING, -014, 90 Duro, .489" ID x .070" Thk,
28	319774A4	1	VALVE, Control, Tow Block, See Figure(s) : 08-23
29	361897A1	1	SPRING,
30	413320A1	1	PLATE,
31	86637776	1	LINK, CHAIN,
32	392748A1	2	SPACER,
33	390918A3	1	ARM,
34	86639207	1	BOLT, Hex, M6 x 70, 10.9, M6 x 70; 10.9
35	412250	1	NUT, LOCK, M8 x 1.25, Cl 8, M6
36	86624177	3	WASHER, M12 x 24 x 2.5, 13,5 x 24 x 2,5 mm
37	337475	3	NUT, M12, Cl 10,
38	352114A1	1	HOSE, 1460 mm (57 in)
39	43362	2	NUT, M8, Cl 10,
40	9992298	2	O-RING, -014, 90 Duro, .489" ID x .070" Thk,
41	86639323	1	WASHER, M17.5 x 30 x 4, HT, 17,5 x 30 x 4 mm
	178889A1	1	FITTING, Diagnostic, Inc. 42, 43
42	86502604	1	DUST CAP, Dust
43	NSS	1	NOT SERVICED SEPARATELY, Fitting, Diagnostic, Inc. 44
44	86639042	1	O-RING, Cl 6, 11.3MM ID x 2.2 Thk, 11,3 ID x 2,2

07-05(03) AXLE HYDRAULICS - PARK BRAKE CIRCUIT, WITHOUT DIFFERENTIAL LOCKS (TJ375 HD,TJ425 POWER SHIFT, TJ450

ссылка	Номер детали	Кол-во	Описание
45	86639081	1	TEE, 1"-14 ORFS, Blkd Run, 1 fc sl, Inc. 46
46	9992069	3	O-RING, -016, 90 Duro, .614" ID x .070" Thk,
47	86625251	3	WASHER, M10 x 18 x 1.6, 11 x 18 x 1,6 mm
48	86639083	3	NUT, LOCK, 13/16"-16, ORFS Blkhd, 13/16 in
49	349863A2	1	CABLE, Tow Valve, See Figure 08-47 for Mounting & Parts.

07-05(04) AXLE HYDRAULICS - PARK BRAKE CIRCUIT,WITHOUT DIFFERENTIAL LOCKS (TJ375 HD, 425 POWER SHIFT,450, 500

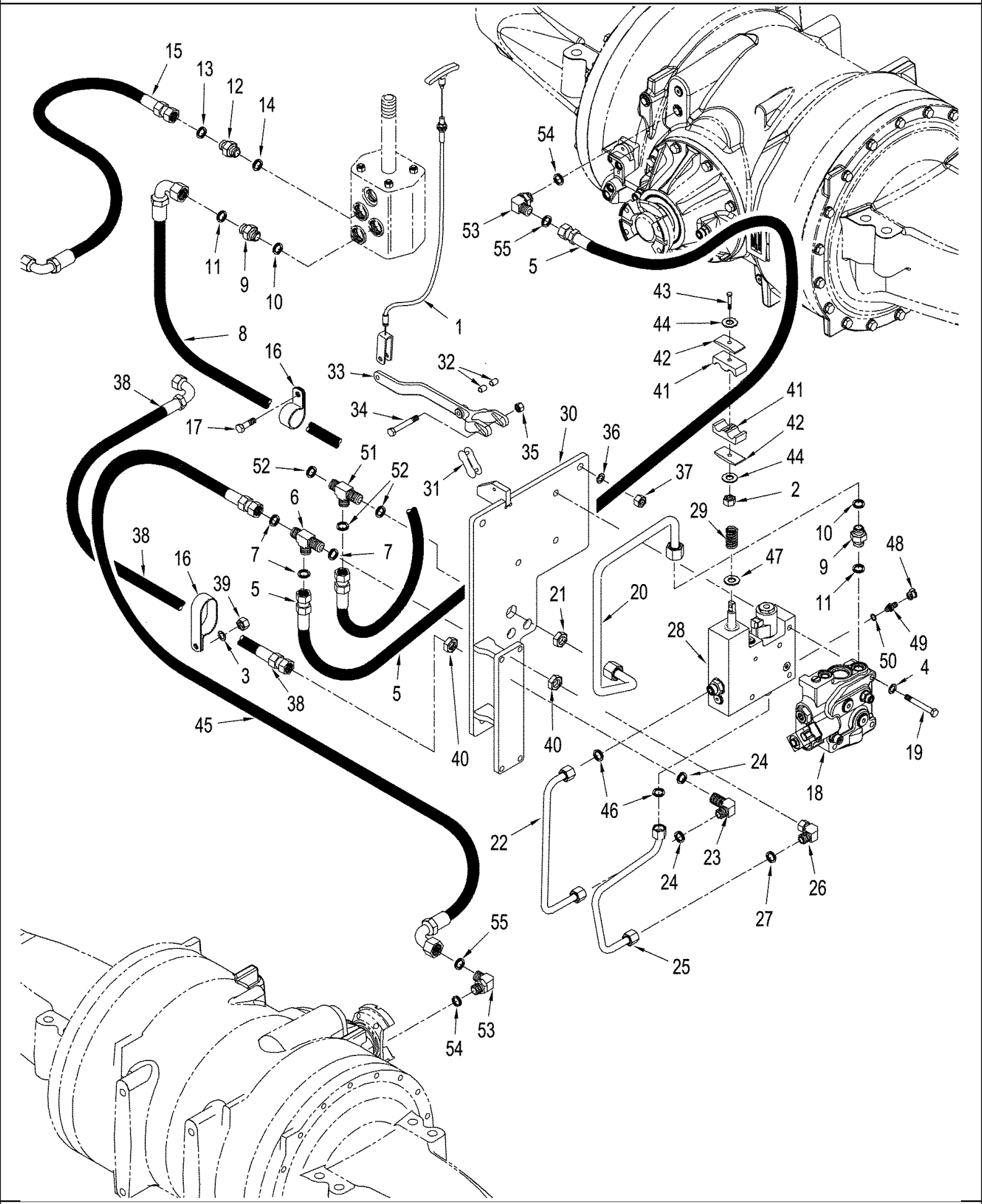

07-05(04) AXLE HYDRAULICS - PARK BRAKE CIRCUIT,WITHOUT DIFFERENTIAL LOCKS (TJ375 HD, 425 POWER SHIFT,450, 500

ссылка	Номер детали	Кол-во	Описание
1	349863A2	1	CABLE, Tow Valve, See Figure : 08-47 for Mounting & Related Parts
2	43362	1	NUT, M8, Cl 10,
3	86624176	2	WASHER, M10 x 20 x 2, 11 x 21 x 2 mm
4	86625251	3	WASHER, M10 x 18 x 1.6, 11 x 18 x 1,6 mm
5	428171A1	1	HOSE ASSY., 2235 mm (88 in)
6	86639080	1	TEE, 13/16"-16 ORFS, Blkd Run, M12 fc sl x blkhd fc sl
7	9992298	3	O-RING, -014, 90 Duro, .489" ID x .070" Thk,
8	418812A1	1	HOSE ASSY., 2286 mm (90 in), BSN RVS001940
8	87416123	1	HOSE ASSY., 2286 mm (90 in), ASN RVS001940
9	86579679	2	CONNECTOR, HYD., 1"-14 ORFS x M18 x 1.5 ORB, 1 fc sl x M18 Or, Inc. 10, 11
10	9992069	2	O-RING, -016, 90 Duro, .614" ID x .070" Thk,
11	86639043	2	O-RING, 15.3 ID x 2.2
12	86579680	1	CONNECTOR, HYD., 1"-14 ORFS x M22 x 1.5 ORB, Includes 13, 14
13	9992069	1	O-RING, -016, 90 Duro, .614" ID x .070" Thk,
14	86639044	1	O-RING, Cl 6, 19.3MM ID x 2.2 Thk, 19.3 ID x 2.2 mm
15	335095A2	1	HOSE ASSY., 1050 mm (41 in)
16	R54363	2	CLAMP, P-type
17	43233	1	BOLT, Hex, M8 x 20, 10.9, Cap, HH, CL 10.9, M8 x 1.25 x 20
18	411104A2	1	VALVE, Regulator, See Figure(s) : 08-22
19	86639150	3	BOLT, Hex, M10 x 150, 10.9, M10 x 150; 10.9
20	449827A1	1	TUBE ASSY.,
21	86639085	1	NUT, LOCK, 1"-14, ORFS Blkhd, 1 in
22	449796A1	1	TUBE ASSY.,
23	86639079	1	ELBOW, 90є, 13/16"-16, ORFS, Blkhd, 90, 13/16 fc sl x blkhd, Inc. 24
24	9992298	2	O-RING, -014, 90 Duro, .489" ID x .070" Thk,
25	449798A1	1	TUBE ASSY.,
26	84989383	1	ELBOW, 90є, 13/16"-16 ORFS x 13/16"-16 Fem Sw, 90, 13/16 fc sl x swl, Inc. 27
27	9992298	1	O-RING, -014, 90 Duro, .489" ID x .070" Thk,
28	319774A4	1	VALVE, Control, Tow Block, See Figure(s) : 08-23
29	361897A1	1	SPRING,
30	449830A1	1	PLATE ASSY.,
31	86637776	1	LINK, CHAIN,
32	392748A1	2	SPACER,
33	390918A3	1	ARM,
34	86639207	1	BOLT, Hex, M6 x 70, 10.9, M6 x 70; 10.9
35	412250	1	NUT, LOCK, M8 x 1.25, Cl 8, M6
36	86624177	3	WASHER, M12 x 24 x 2.5, 13.5 x 24 x 2.5 mm
37	337475	3	NUT, M12, Cl 10,
38	87414079	1	HOSE ASSY.,
39	86500689	2	NUT, M10, Cl 10, M10; 10
40	86639083	3	NUT, LOCK, 13/16"-16, ORFS Blkhd, 13/16 in
41	435470A1	2	CLAMP,
42	435468A1	2	PLATE,
43	86639083	1	NUT, LOCK, 13/16"-16, ORFS Blkhd, Cap, HH, CL 10.9, M8 x 1.25 x 70
44	86624184	2	WASHER, M8 x 16 x 1.6, 9 x 17 x 1,6 mm

ASN RVS001801 TJ375 HD, 425 Power Shift, 450, 500

07-05(04) AXLE HYDRAULICS - PARK BRAKE CIRCUIT,WITHOUT DIFFERENTIAL LOCKS (TJ375 HD, 425 POWER SHIFT,450, 500

ссылка	Номер детали	Кол-во	Описание
45	352112A3	1	HOSE ASSY., 2336 mm (92 in)
46	9992298	2	O-RING, -014, 90 Duro, .489" ID x .070" Thk,
47	86639323	1	WASHER, M17.5 x 30 x 4, HT, 17.5 x 30 x 4 mm
	178889A1	1	FITTING, Diagnostic, Inc. 48, 49
48	86502604	1	DUST CAP, Dust
49	NSS	1	NOT SERVICED SEPARATELY, Fitting, Diagnostic, Inc. 50
50	86639042	1	O-RING, Cl 6, 11.3MM ID x 2.2 Thk, 11.3 ID x 2.2
51	86639081	1	TEE, 1"-14 ORFS, Blkd Run, 1 fc sl, Inc. 52
52	9992069	3	O-RING, -016, 90 Duro, .614" ID x .070" Thk,
53	86579692	2	ELBOW, 90є, 13/16"-18 ORFS x M22 x 1.5 ORB, 90, M22 or x 13/16 fc sl, Inc. 54 & 55
54	86639044	1	O-RING, Cl 6, 19.3MM ID x 2.2 Thk, 19.3 ID x 2.2 Thk
55	9992298	1	O-RING, -014, 90 Duro, .489" ID x .070" Thk,

08 -01 HYDRAULIC OIL COOLER

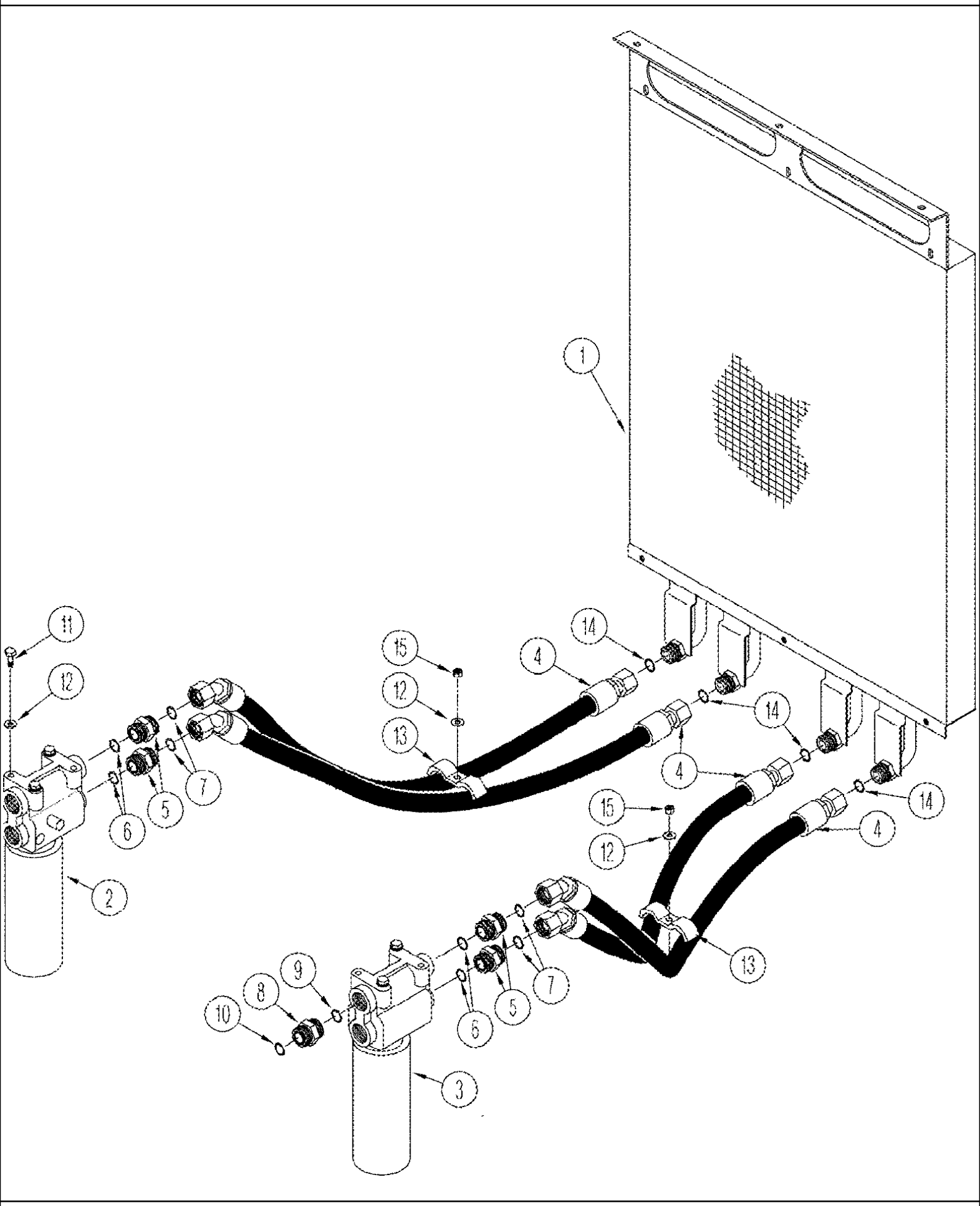

08 -01 HYDRAULIC OIL COOLER

ссылка	Номер детали	Кол-во	Описание
1	87312759	1	COOLER, Oil
2	87409372	1	Head, Filter, Left-Hand, Tranmission, See Figure(s) : 08-03
3	87409373	1	Head, Filter, Right-Hand, Axle Lube, See Figure(s) : 8-03
4	377614A1	4	HOSE ASSY., 1022 mm (45 in)
5	86579682	4	CONNECTOR, HYD., 1 3/16"-12 ORFS x M27 x 2 ORB, Includes 6, 7
6	9991976	4	O-RING, -018, 90 Duro, .739" ID x .070" Thk,
7	86639045	4	O-RING, Cl 6, 23.6MM ID x 2.9 Thk, 23.6 ID x 2.9
8	86580179	2	CONNECTOR, HYD., 1 7/16"-12 ORFS x M22 x 2 ORB, Includes 9, 10
10	86639046	2	O-RING, Cl 6, 29.6MM ID x 2.9 Thk, 29.6 ID x 2.9
11	9846677	4	BOLT, Hex, M10 x 25, 10.9, Full Thd, Cap, HH, CL 10.9, M10 x 1.5 x 25
12	86624176	6	WASHER, M10 x 20 x 2, M10
13	R15257	2	CLAMP,
14	9992069	4	O-RING, -016, 90 Duro, .614" ID x .070" Thk,
15	86500689	2	NUT, M10, Cl 10, M10; 10.9
9	9993141	2	O-RING, -012, 90 Duro, .364" ID x .070" Thk,

08 -02 HYDRAULIC OIL COOLER MOUNTING

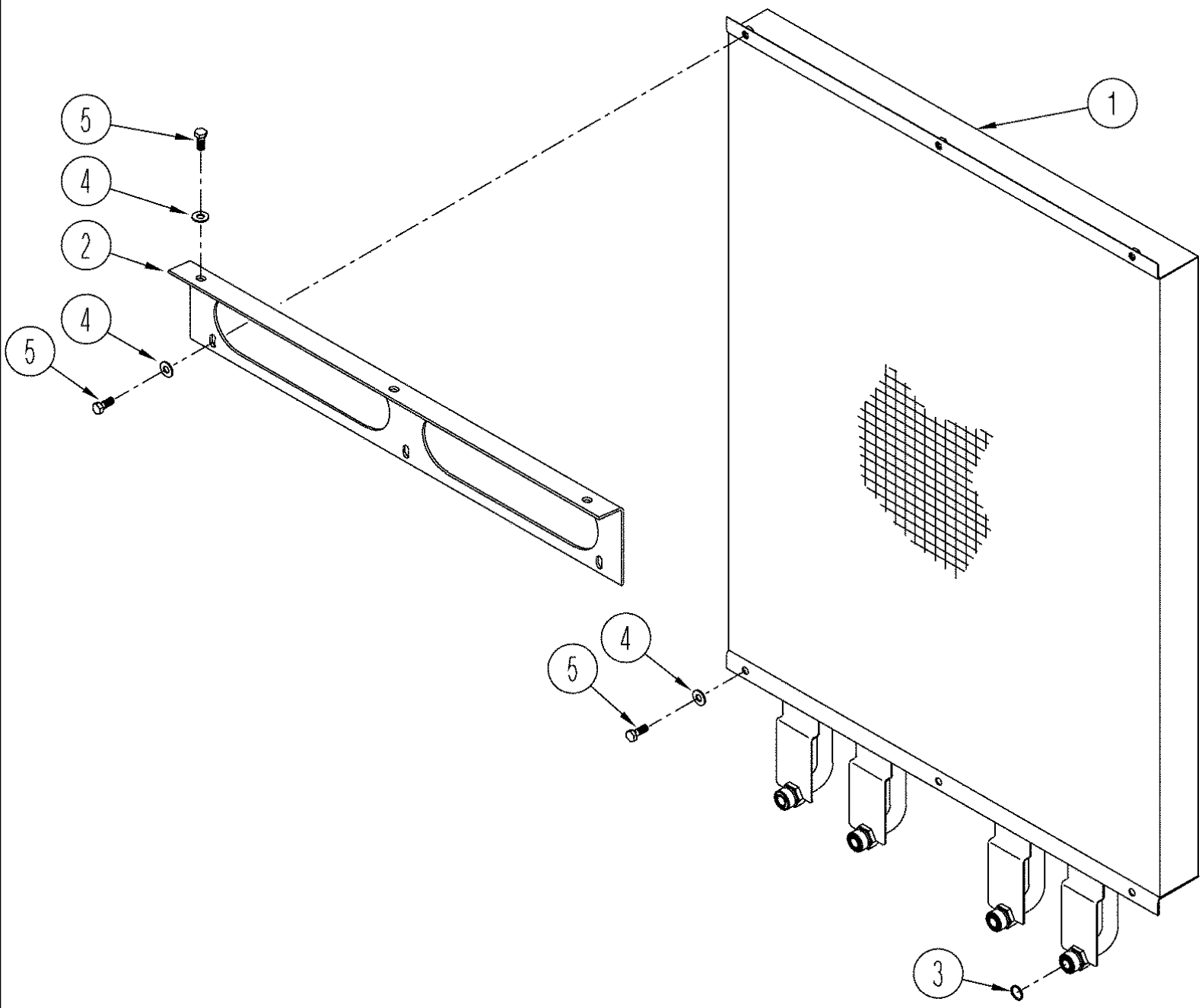

08 -02 HYDRAULIC OIL COOLER MOUNTING

ссылка	Номер детали	Кол-во	Описание
1	87312759	1	COOLER, Oil
2	302339A1	1	ANGLE,
3	9992069	4	O-RING, -016, 90 Duro, .614" ID x .070" Thk,
4	86625263	9	WASHER, M8 x 20 x 1.6,
5	43233	9	BOLT, Hex, M8 x 20, 10.9, Cap, HH, CL 10.9, M8 x 1.25 x 20

08 -03 OIL FILTER - AXLE AND TRANSMISSION

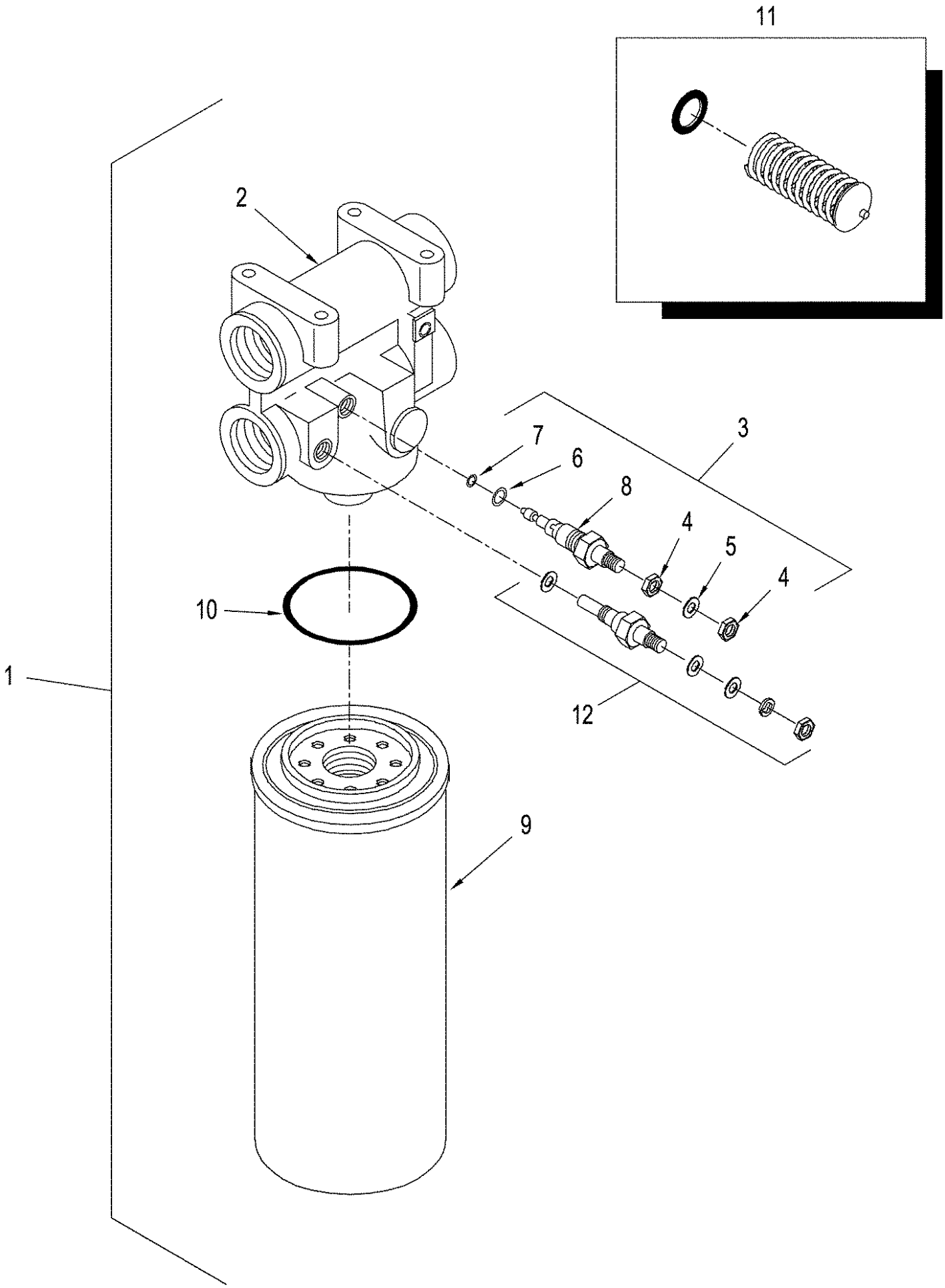

08 -03 OIL FILTER - AXLE AND TRANSMISSION

ссылка	Номер детали	Кол-во	Описание
1	87409372	1	Head, Filter, LH, Transmission, Inc. 2 - 10
1	87409373	1	Head, Filter, RH, Axle Lube
2	NSS	1	NOT SERVICED SEPARATELY, Head
3	N6755	1	INDICATOR, Switch, Restriction, Inc. 4 - 8
4	86625058	2	NUT, #10-32, LH, No. 10 NF
5	280254	1	WASHER, LOCK, Int Tooth, #10,
6	9617873	1	O-RING, 6-1, 90 Duro, .468" ID x .078" Thk,
7	9672548	1	O-RING, -011, 70 Duro, .301" ID x .070" Thk,
8	NSS	1	NOT SERVICED SEPARATELY, Switch
9	86989735	1	FILTER, HYDRAULIC OIL, Inc. 10
10	1986552C2	1	O-RING,
11	443097A1	1	KIT, Check Valve, Outline
12	302557A2	2	SENDER UNIT, Temperature

08 -04 OIL FILTER - MAIN HYDRAULICS (BELOW BATTERY)

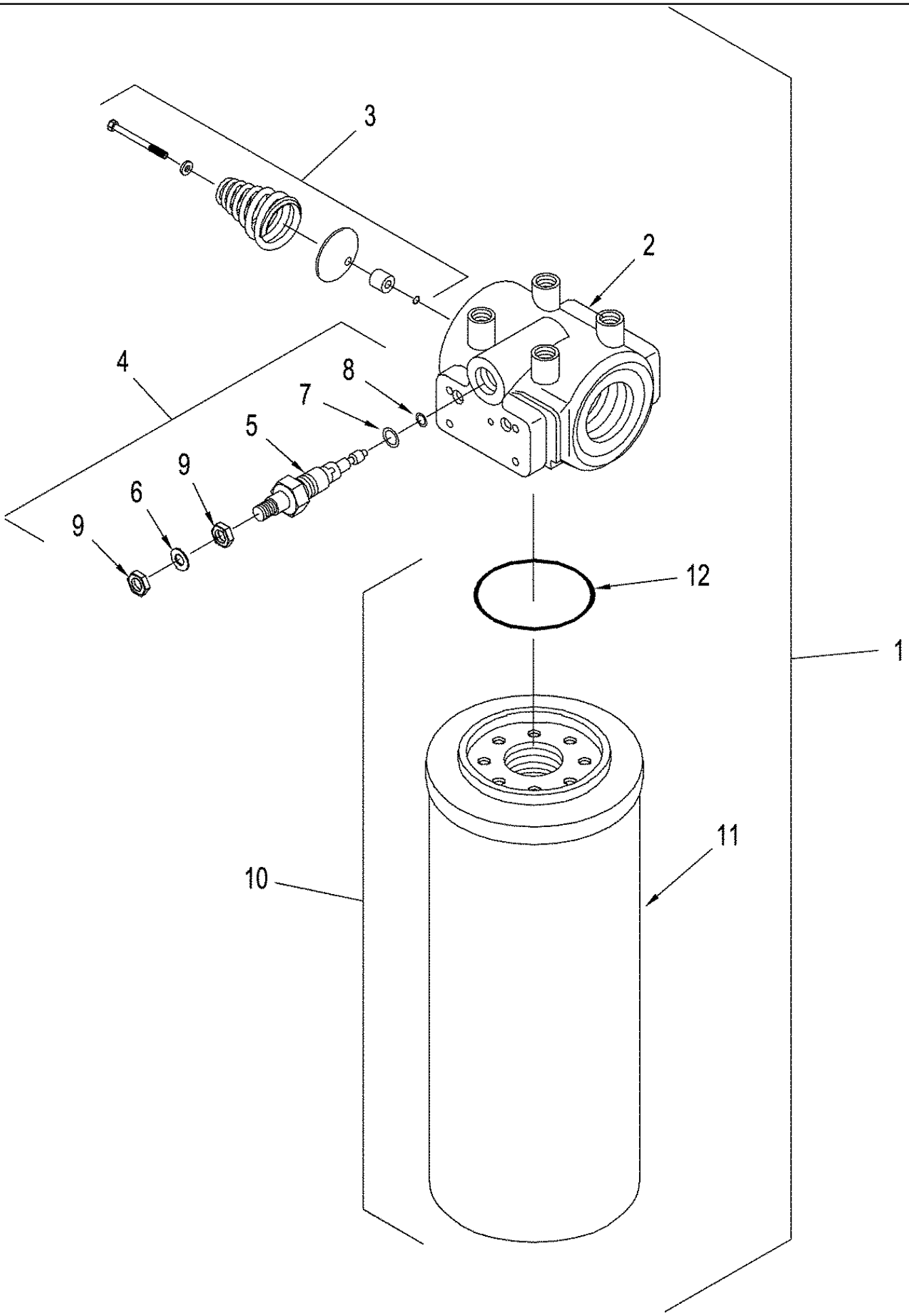

TJ375 TRACTOR - Hydraulic System

08 -04 OIL FILTER - MAIN HYDRAULICS (BELOW BATTERY)

ссылка	Номер детали	Кол-во	Описание
1	86991559	1	FILTER ASSY, Inc. 2 - 12, ASN RVS001801
2	87409374	1	Head, Filter,
3	NSS	1	NOT SERVICED SEPARATELY, Valve, By-Pass
4	N6755	1	INDICATOR, Restriction, Inc. 5 - 9
5	NSS	1	NOT SERVICED SEPARATELY, Indicator
6	280254	1	WASHER, LOCK, Int Tooth, #10,
7	9617873	1	O-RING, 6-1, 90 Duro, .468" ID x .078" Thk,
8	9672548	1	O-RING, -011, 70 Duro, .301" ID x .070" Thk,
9	86625058	2	NUT, #10-32, LH, No. 10 NF
10	86018758	1	FILTER, HYDRAULIC OIL, Inc. 11 & 12
11	NSS	1	NOT SERVICED SEPARATELY, Element
12	NSS	1	NOT SERVICED SEPARATELY, O-Ring

08 -08 AXLE HYDRAULICS - LUBRICATION CIRCUIT (TJ375, TJ425 MANUAL SHIFT, TJ450), BSN RVS001801

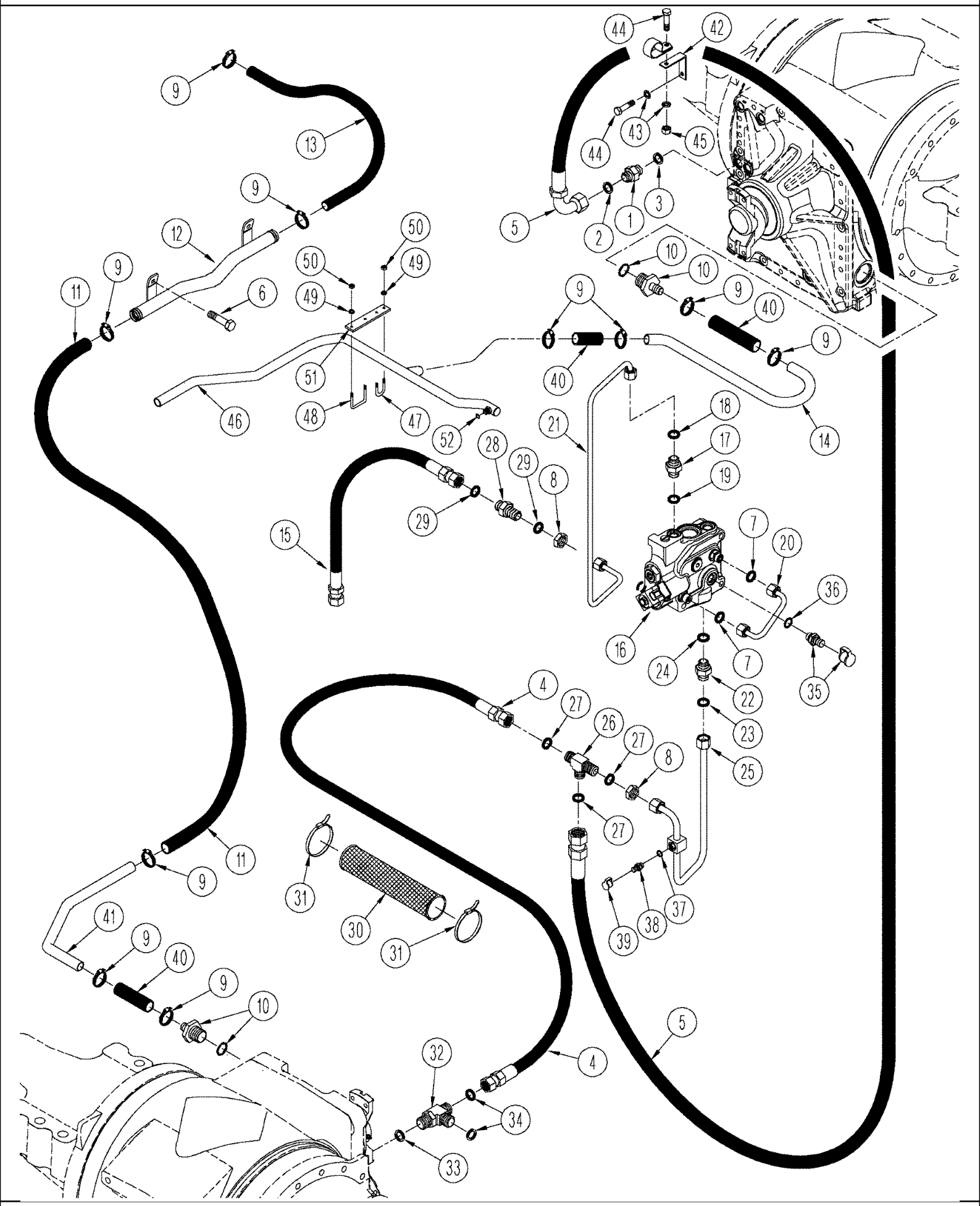

08 -08 AXLE HYDRAULICS - LUBRICATION CIRCUIT (TJ375, TJ425 MANUAL SHIFT, TJ450), BSN RVS001801

ссылка	Номер детали	Кол-во	Описание
1	86579678	1	CONNECTOR, HYD., 13/16"-16 ORFS x M22 x 1.5 ORB, 13/16 fc sl x 22 or, Inc. 2, 3
2	9992298	1	O-RING, -014, 90 Duro, .489" ID x .070" Thk,
3	86639044	1	O-RING, Cl 6, 19.3MM ID x 2.2 Thk, 19.3 ID x 2.2 mm
4	390659A2	1	HOSE ASSY., 2178 mm (86 in)
5	418813A1	1	HOSE, 2464 mm (97 in)
6	43234	2	BOLT, Hex, M8 x 25, 10.9, Cap, HH, CL 10.9, M8 x 1.25 x 25
8	86639083	2	NUT, LOCK, 13/16"-16, ORFS Blkhd, 13/16 in
9	507586	6	CLAMP, HOSE, #20, 0.81/1.75 Type F Worm, No. 20
10	337545A1	2	CONNECTOR, HYD., Axle Drain
11	404991A1	1	HOSE, 38, Cut From : S118383
12	416280A1	1	TUBE ASSY.,
13	340972A1	1	HOSE, 787 mm (31 in), Cut From : 443082A1
14	416727A1	1	TUBE,
15	388475A1	1	HOSE, 1067 mm (42 in)
16	411104A2	1	VALVE, Regulator, See Figure(s) : 08-22
17	86579675	1	CONNECTOR, HYD., 13/16"-16 ORFS x M16 x 1.5 ORB, 13/16 fc sl x M16 Or, Inc. 18, 19
18	9992298	1	O-RING, -014, 90 Duro, .489" ID x .070" Thk,
19	86642449	1	O-RING, Cl 6, 13.3MM ID x 2.2 Thk, 13.3 ID x 2.2
20	413338A1	1	TUBE ASSY.,
21	413334A1	1	TUBE ASSY.,
22	86579676	1	CONNECTOR, HYD., 13/16"-16 ORFS x M18 x 1.5 ORB, 13/16 fc sl x 18 Or, Inc. 23, 24
23	9992298	1	O-RING, -014, 90 Duro, .489" ID x .070" Thk,
24	86639043	1	O-RING, 15.3 ID x 2.2
25	413327A1	1	TUBE ASSY.,
26	86639080	1	TEE, 13/16"-16 ORFS, Blkd Run, M12 fc sl x blkhd fc sl, Inc. 27
27	9992298	3	O-RING, -014, 90 Duro, .489" ID x .070" Thk,
28	X4837565	1	FITTING, 13/16 fc sl x blkhd, Inc. 29
29	9992298	2	O-RING, -014, 90 Duro, .489" ID x .070" Thk,
30	S120426	1	SLEEVE, 24"
31	L18337	2	STRAP, CABLE, 9.95"-12.1" lg, 15 in
32	86639058	1	TEE, 13/16"-16 ORFS x M22 x 1.5 ORB Run, 13/16 fc sl x 22 orb, Inc. 33, 34
33	86639044	1	O-RING, Cl 6, 19.3MM ID x 2.2 Thk, 19.3 ID x 2.2 mm
34	9992298	2	O-RING, -014, 90 Duro, .489" ID x .070" Thk,
35	358968A1	1	COUPLING, M18 orb x 1,5, Diagnostic, Inc. 36
36	86639043	1	O-RING, 15.3 ID x 2.2
37	86639044	1	O-RING, Cl 6, 19.3MM ID x 2.2 Thk, 19.3 ID x 2.2 mm
38	392690A1	1	COUPLING,
39	399032A1	1	CAP,
40	435457A1	3	HOSE, 102 mm (4 in), Cut From : 443082A1
41	416729A1	1	TUBE ASSY.,
42	416512A1	1	SUPPORT,
43	86624184	2	WASHER, M8 x 16 x 1.6, 9 x 17 x 1.6 mm
44	43233	2	BOLT, Hex, M8 x 20, 10.9, Cap, HH, CL 10.9, M8 x 1.25 x 20
45	43362	1	NUT, M8, Cl 10,
46	409614A1	1	TUBE ASSY., Return

08 -08 AXLE HYDRAULICS - LUBRICATION CIRCUIT (TJ375, TJ425 MANUAL SHIFT, TJ450), BSN RVS001801

ссылка	Номер детали	Кол-во	Описание
47	253105A1	2	U-BOLT,
48	396490A1	2	U-BOLT,
49	86624184	8	WASHER, M8 x 16 x 1.6, 9 x 17 x 1.6 mm
50	86528579	8	NUT, LOCK, M8 x 1.25, Cl 10,
51	409609A1	2	PLATE,
7	9993141	2	O-RING, -012, 90 Duro, .364" ID x .070" Thk,
52	9993141	1	O-RING, -012, 90 Duro, .364" ID x .070" Thk,

08 -08(01) AXLE HYDRAULICS - LUBRICATION CIRCUIT (TJ375, TJ425 MANUAL SHIFT, TJ450), BTW RVS001801 & RVS003801

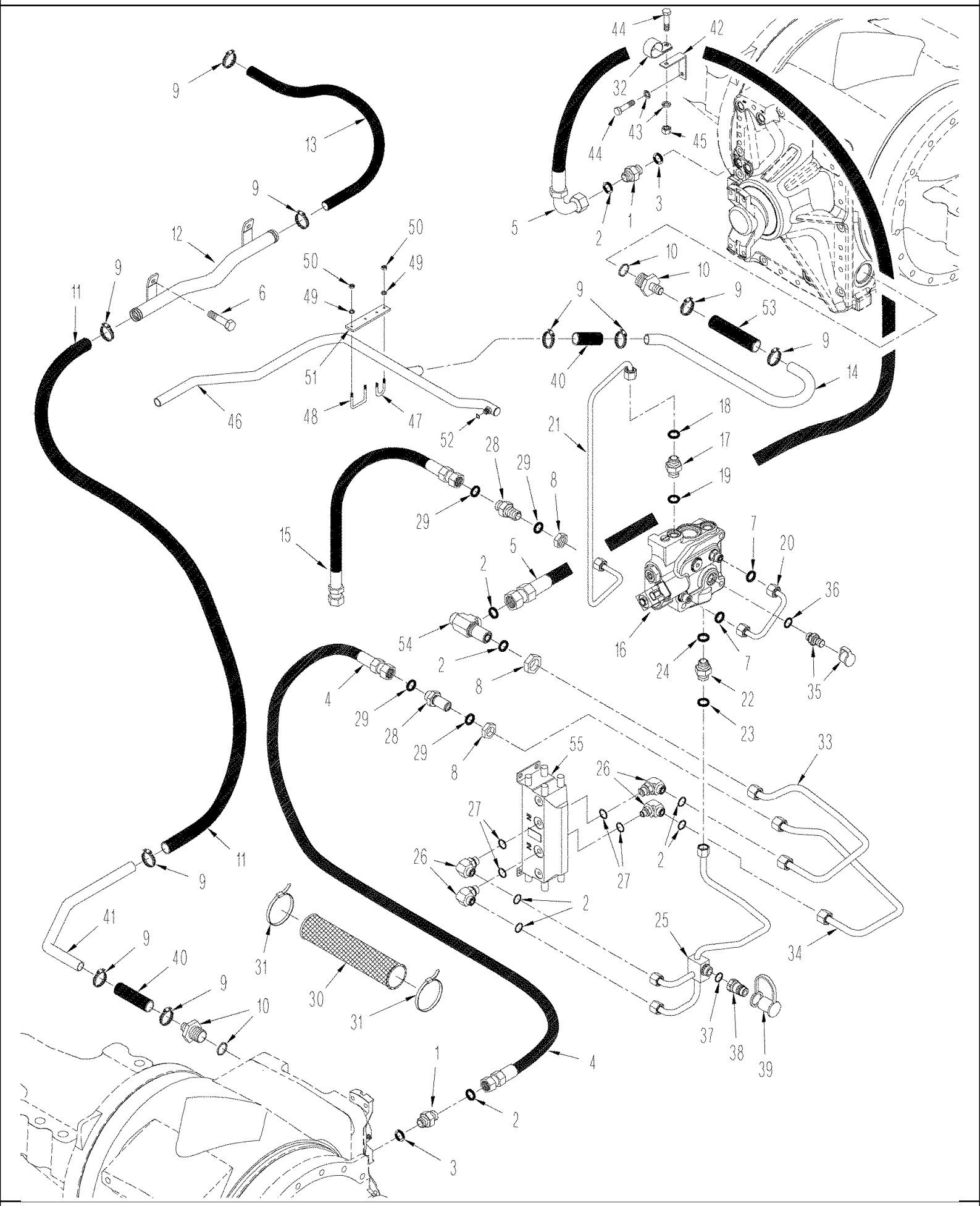

08 -08(01) AXLE HYDRAULICS - LUBRICATION CIRCUIT (TJ375, TJ425 MANUAL SHIFT, TJ450), BTW RVS001801 & RVS003801

ссылка	Номер детали	Кол-во	Описание
1	86579678	2	CONNECTOR, HYD., 13/16"-16 ORFS x M22 x 1.5 ORB, 13/16 fc sl x 22 or, Inc. 2, 3
2	9992298	11	O-RING, -014, 90 Duro, .489" ID x .070" Thk,
3	86639044	1	O-RING, Cl 6, 19.3MM ID x 2.2 Thk, 19.3 ID x 2.2 mm
4	390659A2	1	HOSE ASSY., 2178 mm (86 in)
5	87413875	1	HOSE,
6	43234	2	BOLT, Hex, M8 x 25, 10.9, Cap, HH, CL 10.9, M8 x 1.25 x 25
8	86639083	3	NUT, LOCK, 13/16"-16, ORFS Blkhd, 13/16 in
9	507586	6	CLAMP, HOSE, #20, 0.81/1.75 Type F Worm, No. 20
10	337545A1	2	CONNECTOR, HYD., Axle Drain
11	404991A1	1	HOSE, 38, Cut From : S118383
12	416280A2	1	TUBE ASSY., 625 mm (24-39/64 in)
13	340972A1	1	HOSE, 787 mm (31 in), Cut From : 443082A1
14	416727A1	1	TUBE,
15	87414080	1	HOSE ASSY.,
16	411104A2	1	VALVE, Regulator, See Figure(s) : 08-22
17	86579675	1	CONNECTOR, HYD., 13/16"-16 ORFS x M16 x 1.5 ORB, 13/16 fc sl x M16 Or, Inc. 18, 19
18	9992298	1	O-RING, -014, 90 Duro, .489" ID x .070" Thk,
19	86642449	1	O-RING, Cl 6, 13.3MM ID x 2.2 Thk, 13.3 ID x 2.2
20	413338A1	1	TUBE ASSY.,
21	449800A1	1	TUBE ASSY.,
22	86579676	1	CONNECTOR, HYD., 13/16"-16 ORFS x M18 x 1.5 ORB, 13/16 fc sl x 18 Or, Inc. 23, 24
23	9992298	1	O-RING, -014, 90 Duro, .489" ID x .070" Thk,
24	86639043	1	O-RING, 15.3 ID x 2.2
25	449802A2	1	TUBE ASSY.,
26	9992307	4	ELBOW, 90є, 13/16"-16 x 3/4"-18 Adj, ORFS, 90, 1/2 or x fc sl, Inc. 2, 27
27	86642448	4	O-RING, Cl 6, 9.3MM ID x 2.2 Thk, 9,3 ID x 2,2 Thk
28	X4837565	2	FITTING, 13/16 fc sl x blkhd, Inc. 29
29	9992298	2	O-RING, -014, 90 Duro, .489" ID x .070" Thk,
30	S120426	1	SLEEVE, 24"
31	L18337	2	STRAP, CABLE, 9.95"-12.1" lg, 15 in
32	86637979	1	CLAMP, 13/16", Insul, 3/8" Bolt,
33	449813A2	1	TUBE ASSY.,
33	449813A2	1	TUBE ASSY., 19.3 ID x 2.2 mm
34	449815A2	2	TUBE ASSY.,
35	358968A1	1	COUPLING, M18 orb x 1,5, Diagnostic, Inc. 36
36	86639043	1	O-RING, 15.3 ID x 2.2
37	86639044	1	O-RING, Cl 6, 19.3MM ID x 2.2 Thk, 19.3 ID x 2.2 mm
38	392690A1	1	COUPLING,
39	399032A1	1	CAP,
40	435457A1	2	HOSE, 102 mm (4 in), Cut From : 443082A1
41	416729A1	1	TUBE ASSY.,
42	416512A1	1	SUPPORT,
43	86624184	2	WASHER, M8 x 16 x 1.6, 9 x 17 x 1.6 mm
44	43233	2	BOLT, Hex, M8 x 20, 10.9, Cap, HH, CL 10.9, M8 x 1.25 x 20
45	43362	1	NUT, M8, Cl 10,

08 -08(01) AXLE HYDRAULICS - LUBRICATION CIRCUIT (TJ375, TJ425 MANUAL SHIFT, TJ450), BTW RVS001801 & RVS003801

ссылка	Номер детали	Кол-во	Описание
46	409614A1	1	TUBE ASSY., Return
47	253105A1	2	U-BOLT,
48	396490A1	2	U-BOLT,
49	86624184	8	WASHER, M8 x 16 x 1.6, 9 x 17 x 1.6 mm
50	86528579	8	NUT, LOCK, M8 x 1.25, Cl 10,
51	409609A1	2	PLATE,
53	437116A1	1	HOSE, LARGE, 127 mm (5 in), Cut From: 443082A1
54	86639079	1	ELBOW, 90є, 13/16"-16, ORFS, Blkhd, 90, 1/2 x blkhd, Inc. 2
55	434727A1	1	MOTOR-PUMP, Axle Air / Lube
7	9993141	2	O-RING, -012, 90 Duro, .364" ID x .070" Thk,
52	9993141	1	O-RING, -012, 90 Duro, .364" ID x .070" Thk,

08 -08(02) AXLE HYDRAULICS - LUBRICATION CIRCUIT (TJ375, TJ425 MANUAL SHIFT), ASN RVS003801

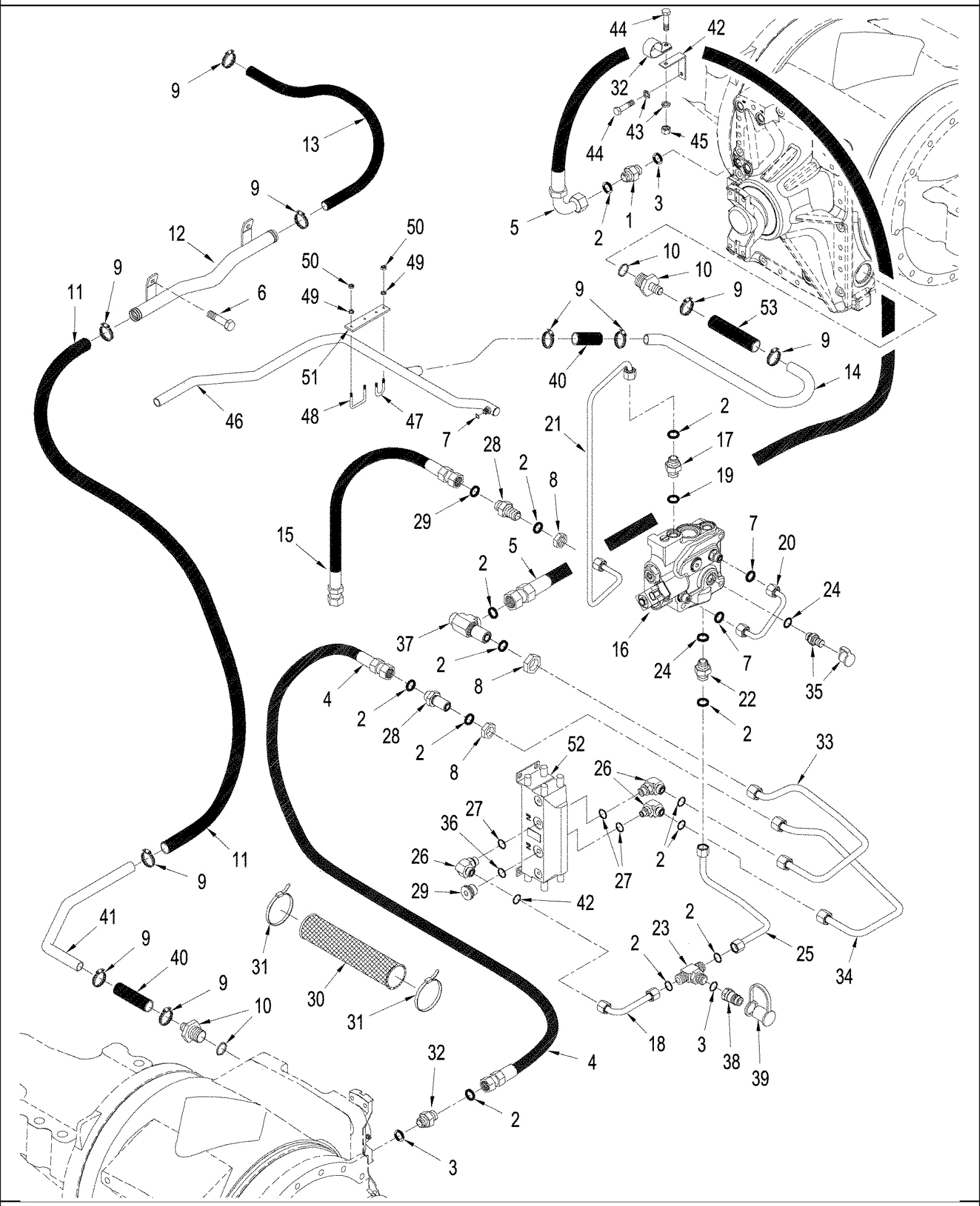

08 -08(02) AXLE HYDRAULICS - LUBRICATION CIRCUIT (TJ375, TJ425 MANUAL SHIFT), ASN RVS003801

ссылка	Номер детали	Кол-во	Описание
1	86579678	2	CONNECTOR, HYD., 13/16"-16 ORFS x M22 x 1.5 ORB, 13/16 fc sl x 22 or, Inc. 2, 3
2	9992298	15	O-RING, -014, 90 Duro, .489" ID x .070" Thk,
3	86639044	2	O-RING, Cl 6, 19.3MM ID x 2.2 Thk, 19.3 ID x 2.2 mm
4	390659A2	1	HOSE ASSY., 2178 mm (86 in)
5	87413875	1	HOSE,
6	43234	2	BOLT, Hex, M8 x 25, 10.9, Cap, HH, CL 10.9, M8 x 1.25 x 25
8	86639083	3	NUT, LOCK, 13/16"-16, ORFS Blkhd, 13/16 in
9	507586	6	CLAMP, HOSE, #20, 0.81/1.75 Type F Worm, No. 20
10	337545A1	2	CONNECTOR, HYD., Axle Drain
11	404991A1	1	HOSE, 38, Cut From : S118383
12	416280A2	1	TUBE ASSY., 625 mm (24-39/64 in)
13	340972A1	1	HOSE, 787 mm (31 in), Cut From : 443082A1
14	416727A1	1	TUBE,
15	87414080	1	HOSE ASSY.,
16	411104A2	1	VALVE, Regulator, See Figure(s) : 08-22
17	86579675	1	CONNECTOR, HYD., 13/16"-16 ORFS x M16 x 1.5 ORB, 13/16 fc sl x M16 Or, Inc. 2, 19
18	87307521	1	TUBE ASSY.,
19	86642449	1	O-RING, Cl 6, 13.3MM ID x 2.2 Thk, 13.3 ID x 2.2
20	413338A1	1	TUBE ASSY.,
21	449800A1	1	TUBE ASSY.,
22	86579676	1	CONNECTOR, HYD., 13/16"-16 ORFS x M18 x 1.5 ORB, 13/16 fc sl x 18 Or, Inc. 2, 24
23	700-447	1	TEE, 13/16"-16 ORFS x M22 x 1.5 ORB Br, M22 or x 13/16" fc sl, Inc. 2, 24
24	86639043	2	O-RING, 15.3 ID x 2.2
25	87307544	1	TUBE ASSY.,
26	9992307	3	ELBOW, 90є, 13/16"-16 x 3/4"-18 Adj, ORFS, 90, 1/2 or x fc sl, Inc. 2, 27
27	86642448	3	O-RING, Cl 6, 9.3MM ID x 2.2 Thk, 9,3 ID x 2,2 Thk
28	X4837565	2	FITTING, 13/16 fc sl x blkhd, Inc. 2
29	86590562	1	PLUG, Hex Soc, 3/4"-16 ORB, Soc Hd, 3/4"or, Inc. 36
30	S120426	1	SLEEVE, 24"
31	L18337	2	STRAP, CABLE, 9.95"-12.1" lg, 15 in
32	86637979	1	CLAMP, 13/16", Insul, 3/8" Bolt,
33	449813A2	1	TUBE ASSY.,
33	449813A2	1	TUBE ASSY., 19.3 ID x 2.2 mm
34	449815A2	2	TUBE ASSY.,
35	358968A1	1	COUPLING, M18 orb x 1,5, Diagnostic, Inc. 24
36	167266	1	O-RING, 12-1, 90 Duro, .924 ID x .116" Thk,
38	392690A1	1	COUPLING,
39	399032A1	1	CAP,
40	435457A1	2	HOSE, 102 mm (4 in), Cut From : 443082A1
41	416729A1	1	TUBE ASSY.,
42	416512A1	1	SUPPORT,
43	86624184	2	WASHER, M8 x 16 x 1.6, 9 x 17 x 1.6 mm
44	43233	2	BOLT, Hex, M8 x 20, 10.9, Cap, HH, CL 10.9, M8 x 1.25 x 20
45	43362	1	NUT, M8, Cl 10,
46	409614A1	1	TUBE ASSY., Return

08 -08(02) AXLE HYDRAULICS - LUBRICATION CIRCUIT (TJ375, TJ425 MANUAL SHIFT), ASN RVS003801

ссылка	Номер детали	Кол-во	Описание
47	253105A1	2	U-BOLT,
48	396490A1	2	U-BOLT,
49	86624184	8	WASHER, M8 x 16 x 1.6, 9 x 17 x 1.6 mm
50	86528579	8	NUT, LOCK, M8 x 1.25, Cl 10,
51	409609A1	2	PLATE,
52	434727A1	1	MOTOR-PUMP, Axle Air / Lube
53	437116A1	1	HOSE, LARGE, 127 mm (5 in), Cut From: 443082A1
54	86639079	1	ELBOW, 90є, 13/16"-16, ORFS, Blkhd, 90, 1/2 x blkhd, Inc. 2
7	9993141	3	O-RING, -012, 90 Duro, .364" ID x .070" Thk,

08 -09 AXLE HYDRAULICS - LUBRICATION AND COOLING CIRCUIT (TJ375, TJ425 MANUAL SHIFT, TJ450), BSN RVS001801

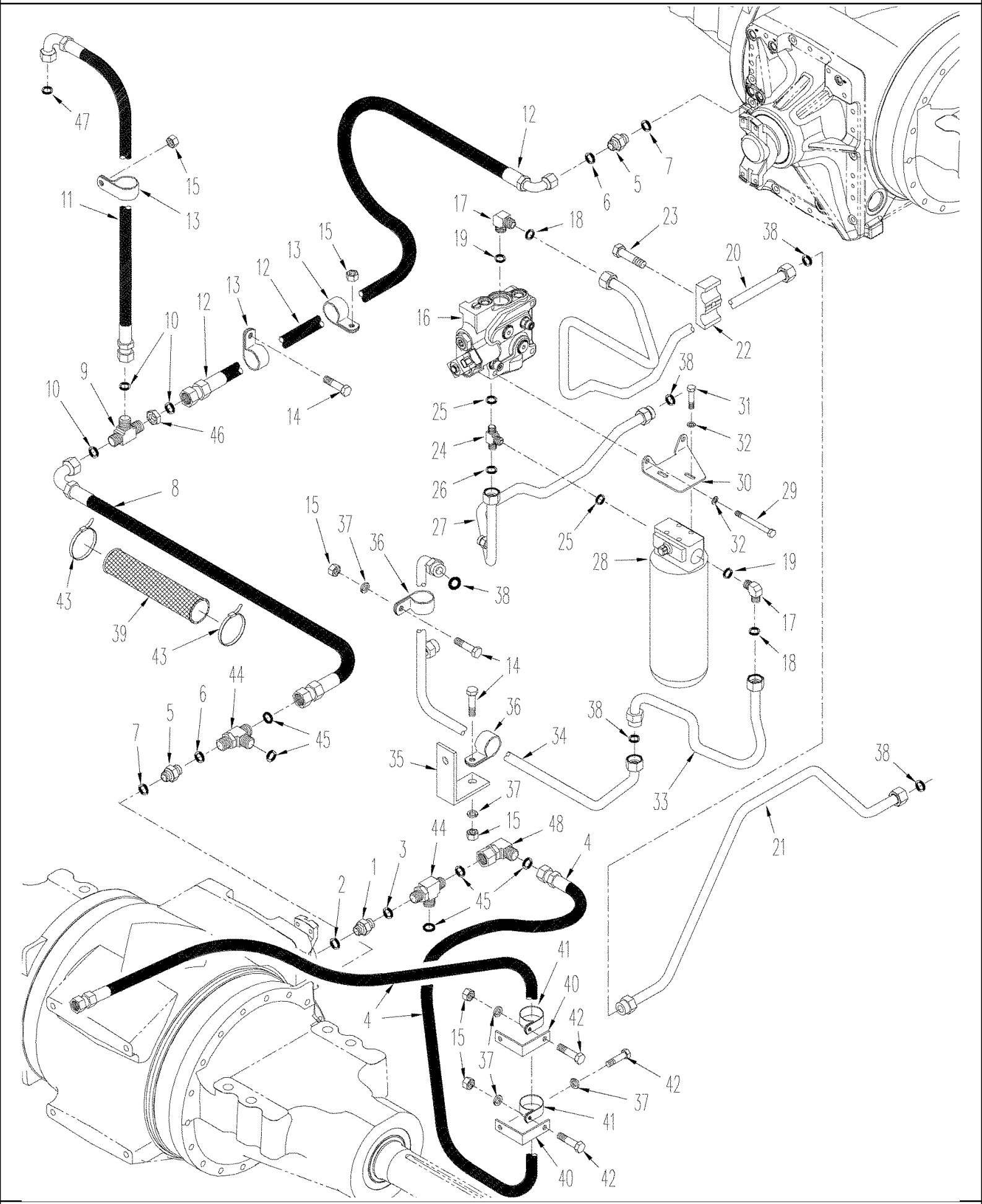

08 -09 AXLE HYDRAULICS - LUBRICATION AND COOLING CIRCUIT (TJ375, TJ425 MANUAL SHIFT, TJ450), BSN RVS001801

ссылка	Номер детали	Кол-во	Описание
1	86579676	1	CONNECTOR, HYD., 13/16"-16 ORFS x M18 x 1.5 ORB, 11/16 fc sl x 18 Or, Inc. 2, 3
2	86639043	1	O-RING, 15.3 ID x 2.2
3	9992298	1	O-RING, -014, 90 Duro, .489" ID x .070" Thk,
4	436927A1	1	HOSE ASSY., 2045 mm (80 1/2in)
5	86579678	2	CONNECTOR, HYD., 13/16"-16 ORFS x M22 x 1.5 ORB, 13/16 fc sl x 22 or, Inc. 6, 7
6	9992298	2	O-RING, -014, 90 Duro, .489" ID x .070" Thk,
7	86639044	2	O-RING, Cl 6, 19.3MM ID x 2.2 Thk, 19.3 ID x 2.2 mm
8	361954A1	1	HOSE ASSY., 2108 mm (83 in)
9	86639080	1	TEE, 13/16"-16 ORFS, Blkd Run, M12 fc sl x blkhd fc sl, Inc. 10
10	9992298	3	O-RING, -014, 90 Duro, .489" ID x .070" Thk,
11	352111A2	1	HOSE ASSY., 984 mm (37 in)
12	382094A1	1	HOSE ASSY., 1822 mm (71-1/2 in)
13	86637979	3	CLAMP, 13/16", Insul, 3/8" Bolt, P-type
14	43234	4	BOLT, Hex, M8 x 25, 10.9, Cap, HH, CL 10.9, M8 x 1.25 x 25
15	43362	10	NUT, M8, Cl 10,
16	411104A2	1	VALVE, Regulator, See Figure(s) : 08-22
17	86580180	2	ELBOW, 90є, 1 7/16"-12 ORFS x M33 x 2 ORB, Includes 18, 19
18	9824050	2	O-RING, -021, 90 Duro, .926" ID x .070" Thk,
19	86639046	2	O-RING, Cl 6, 29.6MM ID x 2.9 Thk, 29.6 ID x 2.9
20	416712A1	1	TUBE ASSY.,
21	416701A1	1	TUBE ASSY.,
22	R15257	1	CLAMP,
23	9780069	2	BOLT, Hex, M8 x 40, 10.9, Cap, HH, CL 10.9, M8 x 1.25 x 40
24	328232A1	1	TEE,
25	86639046	2	O-RING, Cl 6, 29.6MM ID x 2.9 Thk, 29.6 ID x 2.9
26	9824050	1	O-RING, -021, 90 Duro, .926" ID x .070" Thk,
27	416703A1	1	TUBE ASSY.,
28	86991559	1	FILTER ASSY, See Figure(s) : 08-04
29	86639150	3	BOLT, Hex, M10 x 150, 10.9, M10 x 150; 10.9
30	413322A1	1	BRACKET,
31	9861444	4	BOLT, Hex, M10 x 20, 10.9, Full Thd, M10 x 20; 10.9
32	86625251	4	WASHER, M10 x 18 x 1.6, 11 x 18 x 1.6 mm
33	416699A1	1	TUBE ASSY.,
34	416708A1	1	TUBE ASSY.,
35	417270A1	2	BRACKET,
36	86637977	3	CLAMP, 1", Insul, 5/16" Bolt, 1 ID
37	86624184	6	WASHER, M8 x 16 x 1.6, 9 x 17 x 1.6 mm
38	9824050	5	O-RING, -021, 90 Duro, .926" ID x .070" Thk,
39	S120426	1	SLEEVE,
40	416512A1	2	SUPPORT,
41	86624005	2	CLAMP, 3/4", Insul, 3/8" Bolt,
42	43233	4	BOLT, Hex, M8 x 20, 10.9, Cap, HH, CL 10.9, M8 x 1.25 x 20
43	L18337	2	STRAP, CABLE, 9.95"-12.1" lg, 15 in
44	86514261	1	TEE, 13/16"-16 ORFS x 13/16"-16 Fem Sw Run, Inc. 45
45	9992298	2	O-RING, -014, 90 Duro, .489" ID x .070" Thk,

08 -09 AXLE HYDRAULICS - LUBRICATION AND COOLING CIRCUIT (TJ375, TJ425 MANUAL SHIFT, TJ450), BSN RVS001801

ссылка	Номер детали	Кол-во	Описание
46	86639083	1	NUT, LOCK, 13/16"-16, ORFS Blkhd, 13/16 in
47	9992298	1	O-RING, -014, 90 Duro, .489" ID x .070" Thk,
48	84989383	1	ELBOW, 90є, 13/16"-16 ORFS x 13/16"-16 Fem Sw, 90, 13/16 fc sl x Swl, Inc. 45
	719517003		KIT, Motor Return / Power Beyond, Inc. 44, 48, See Figure(s) : 08-45, 08-46

08 -09(01) AXLE HYDRAULICS - AIR AND LUBRICATION CIRCUIT (TJ375, TJ425 MANUAL SHIFT, TJ450), ASN RVS001801

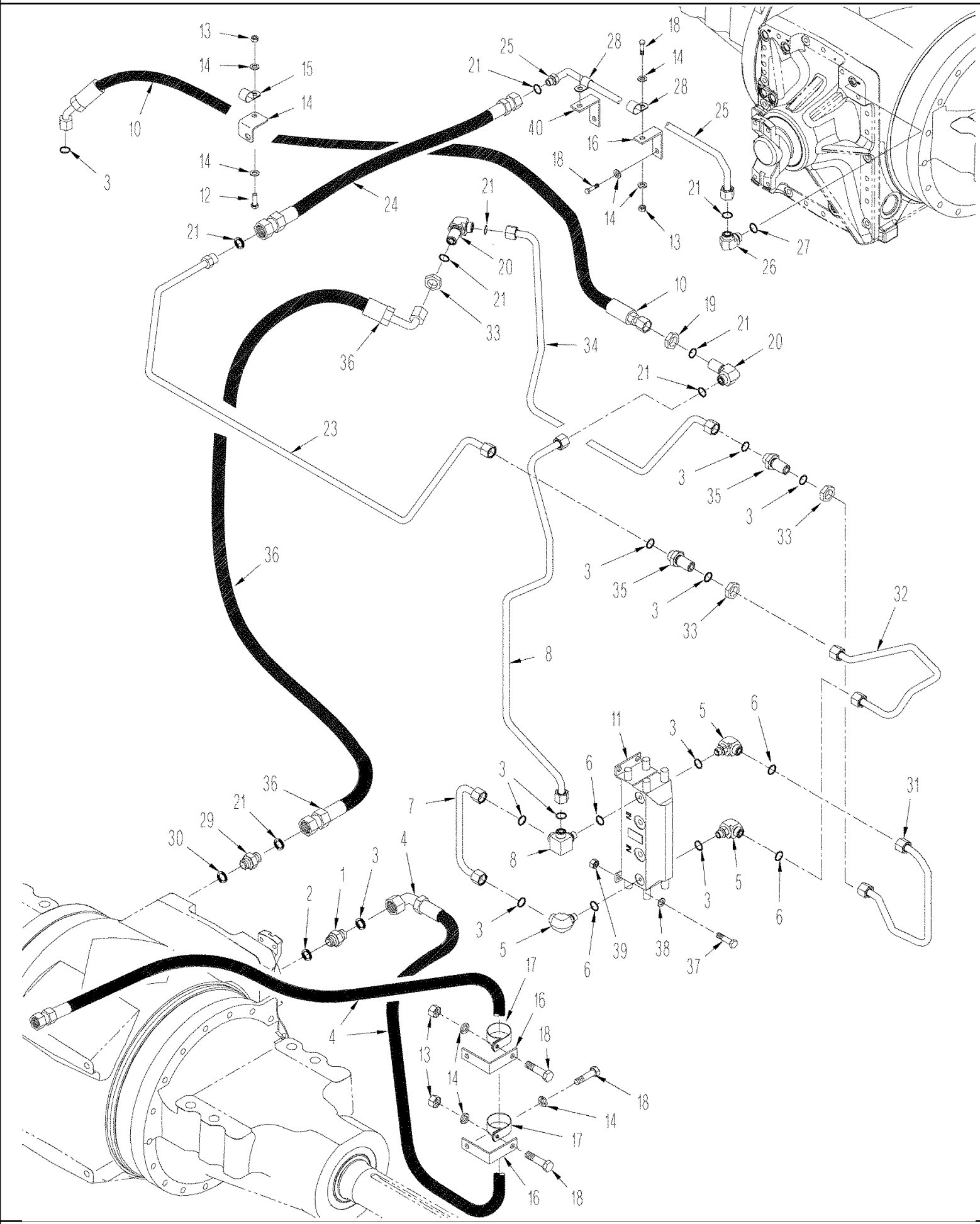

ASN RVS001801 TJ375, TJ425 Manual Shift, TJ450

08 -09(01) AXLE HYDRAULICS - AIR AND LUBRICATION CIRCUIT (TJ375, TJ425 MANUAL SHIFT, TJ450), ASN RVS001801

ссылка	Номер детали	Кол-во	Описание
1	86579676	1	CONNECTOR, HYD., 13/16"-16 ORFS x M18 x 1.5 ORB, 11/16 fc sl x 18 Or, Inc. 2, 3
2	86639043	1	O-RING, 15.3 ID x 2.2
3	9992298	6	O-RING, -014, 90 Duro, .489" ID x .070" Thk,
4	436927A1	1	HOSE ASSY., 2045 mm (80 1/2in), Used without Power Take Off
5	87016877	3	ELBOW, 90є, 13/16"-16 x 9/16"-18, Adj, ORFS, 90, M12 or x fc sl, Inc. 6, 3
6	86642448	3	O-RING, Cl 6, 9.3MM ID x 2.2 Thk, 9,3 ID x 2,2 Thk
7	449794A1	1	TUBE ASSY.,
8	450905A1	1	TEE, Special, 1/2 or x fc sl, Inc. 3, 6
9	449821A2	1	TUBE ASSY., M12 fc sl x blkhd fc sl, Inc. 10
10	86992953	3	HOSE ASSY.,
11	434727A1	1	MOTOR-PUMP, Axle Air / Lube
12	43234	4	BOLT, Hex, M8 x 25, 10.9, Cap, HH, CL 10.9, M8 x 1.25 x 25
13	43362	7	NUT, M8, Cl 10,
14	86624184	10	WASHER, M8 x 16 x 1.6, 9 x 17 x 1.6 mm
15	86637979	1	CLAMP, 13/16", Insul, 3/8" Bolt,
16	416512A1	4	SUPPORT,
17	86624005	2	CLAMP, 3/4", Insul, 3/8" Bolt,
18	43233	8	BOLT, Hex, M8 x 20, 10.9, Cap, HH, CL 10.9, M8 x 1.25 x 20
19	86639083	1	NUT, LOCK, 13/16"-16, ORFS Blkhd, 13/16
20	86639079	3	ELBOW, 90є, 13/16"-16, ORFS, Blkhd, 90, 13/16 fc sl x blkhd, Inc. 21
21	9992298	7	O-RING, -014, 90 Duro, .489" ID x .070" Thk,
22	416102A1	1	SUPPORT, Bracket
23	449825A1	1	TUBE ASSY.,
24	436927A1	1	HOSE ASSY., 2045 mm (80-1/2 in)
25	87413731	1	TUBE ASSY.,
26	86579692	1	ELBOW, 90є, 13/16"-18 ORFS x M22 x 1.5 ORB, 90, M22 or x 13/16 fc sl, Inc. 54
27	86639044	1	O-RING, Cl 6, 19.3MM ID x 2.2 Thk, 19,3 ID x 2,2 Thk
28	86010402	2	CLAMP, 1/2", Insul, 3/8" Bolt,
29	86579678	1	CONNECTOR, HYD., 13/16"-16 ORFS x M22 x 1.5 ORB, M22 or x 13/16 fc sl, Inc. 45, 57
30	86639044	1	O-RING, Cl 6, 19.3MM ID x 2.2 Thk, 19,3 ID x 2,2 Thk
31	449817A2	1	TUBE ASSY.,
32	86992542	1	TUBE ASSY.,
33	86639083	2	NUT, LOCK, 13/16"-16, ORFS Blkhd, Lock
34	449823A1	1	TUBE ASSY.,
35	X4837565	1	FITTING, 13/16 fc sl x blkhd, Inc. 3
36	86994373	1	HOSE ASSY., 2150 mm (84-1/2 in)
37	9515003	4	BOLT, Hex, M10 x 30, 10.9, Full Thd,
38	86625252	4	WASHER, M10 x 21.5 x 2.5, HT, 11 x 21 x 2,5 mm
39	86500689	4	NUT, M10, Cl 10, M10; 10
40	87413733	1	BRACKET,

08 -13 AXLE HYDRAULICS - LUBRICATION CIRCUIT (TJ375 HD, TJ425 POWER SHIFT, TJ450), BSN RVS001801

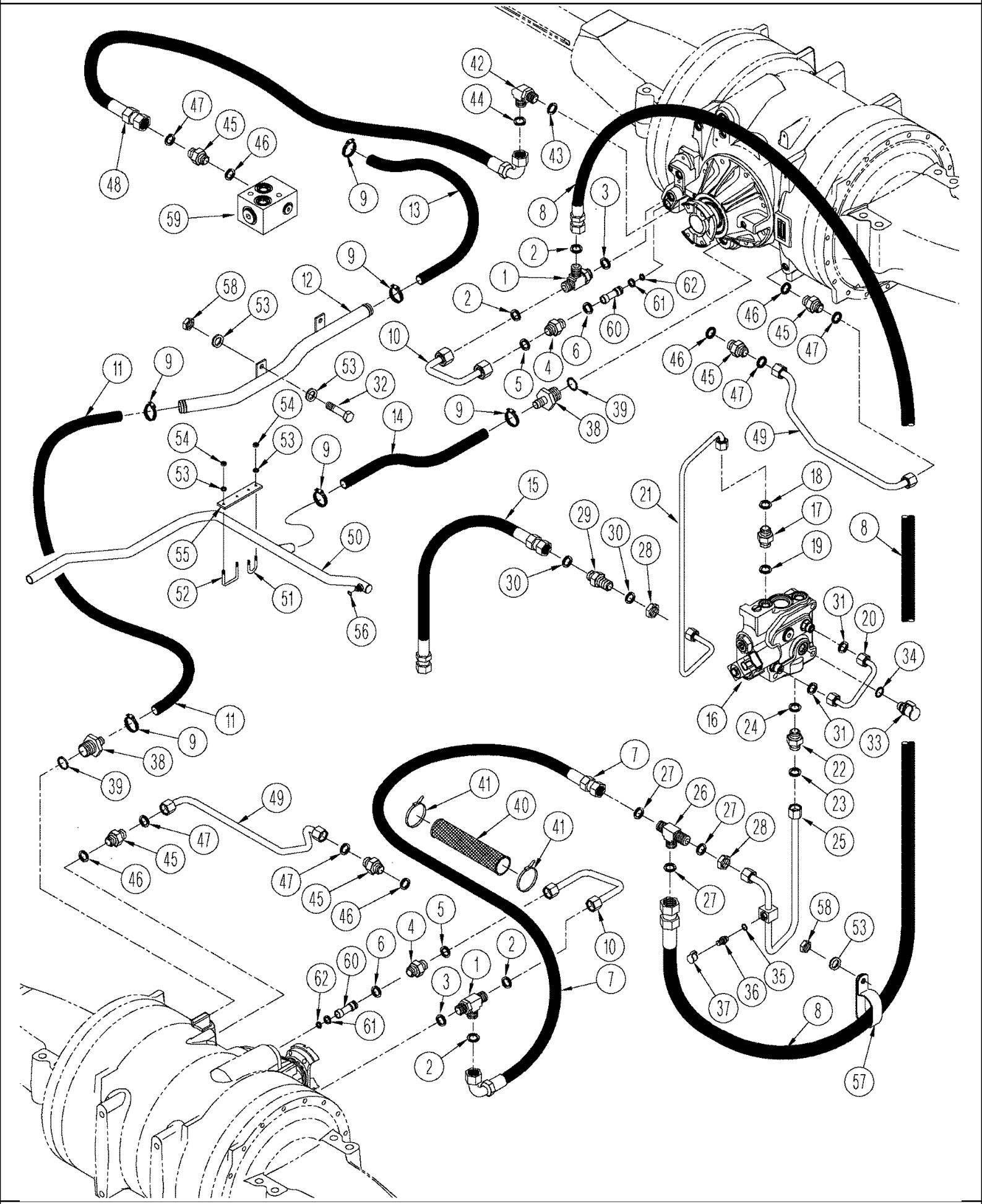

08 -13 AXLE HYDRAULICS - LUBRICATION CIRCUIT (TJ375 HD, TJ425 POWER SHIFT, TJ450), BSN RVS001801

ссылка	Номер детали	Кол-во	Описание
1	86639058	2	TEE, 13/16"-16 ORFS x M22 x 1.5 ORB Run, 13/16 fc sl x 22 orb, Inc. 2, 3
2	9992298	4	O-RING, -014, 90 Duro, .489" ID x .070" Thk,
3	86639044	2	O-RING, Cl 6, 19.3MM ID x 2.2 Thk, 19,3 ID x 2,2 mm
4	86579676	2	CONNECTOR, HYD., 13/16"-16 ORFS x M18 x 1.5 ORB, 13/16 fc sl x 18 Or, Inc. 5, 6
5	9992298	2	O-RING, -014, 90 Duro, .489" ID x .070" Thk,
6	86639043	2	O-RING, 15,3 ID x 2,2
7	353607A3	1	HOSE ASSY., 2165 mm (85 in)
8	428170A1	1	HOSE ASSY., 2514 mm (99 in)
9	507586	6	CLAMP, HOSE, #20, 0.81/1.75 Type F Worm, No. 20
10	413458A1	2	TUBE ASSY.,
11	353649A1	1	HOSE, 1346 mm (53 in), Cut From : 443082A1
12	416705A1	1	TUBE ASSY.,
13	340972A1	1	HOSE, 787 mm (31 in), Cut From : 443082A1
14	395933A1	1	HOSE, 356 mm (14 in), Cut From : S118383
15	388475A1	1	HOSE, 1067 mm (42 in)
16	411104A2	1	VALVE, Regulator, See Figure(s) : 08-22
17	86579675	1	CONNECTOR, HYD., 13/16"-16 ORFS x M16 x 1.5 ORB, 13/16 fc sl x M16 Or, Inc. 18, 19
18	9992298	1	O-RING, -014, 90 Duro, .489" ID x .070" Thk,
19	86642449	1	O-RING, Cl 6, 13.3MM ID x 2.2 Thk, 13,3 ID x 2,2
20	413338A1	1	TUBE ASSY.,
21	413334A1	1	TUBE ASSY.,
22	86579676	1	CONNECTOR, HYD., 13/16"-16 ORFS x M18 x 1.5 ORB, 13/16 fc sl x 18 Or, Inc. 23, 24
23	9992298	1	O-RING, -014, 90 Duro, .489" ID x .070" Thk,
24	86639043	1	O-RING, 15,3 ID x 2,2
25	413327A1	1	TUBE ASSY.,
26	86639080	1	TEE, 13/16"-16 ORFS, Blkd Run, M12 fc sl x blkhd fc sl, Inc. 27
27	9992298	3	O-RING, -014, 90 Duro, .489" ID x .070" Thk,
28	86639083	2	NUT, LOCK, 13/16"-16, ORFS Blkhd, 13/16 in
29	X4837565	1	FITTING, 13/16 fc sl x blkhd, Inc. 30
30	9992298	2	O-RING, -014, 90 Duro, .489" ID x .070" Thk,
32	43234	2	BOLT, Hex, M8 x 25, 10.9, Cap, HH, CL 10.9, M8 x 1.25 x 25
33	358968A1	1	COUPLING, M18 orb x 1,5, Diagnostic, Inc. 34
34	86639044	1	O-RING, Cl 6, 19.3MM ID x 2.2 Thk, 19,3 ID x 2,2 mm
35	86639044	1	O-RING, Cl 6, 19.3MM ID x 2.2 Thk, 19,3 ID x 2,2 mm
36	392690A1	1	COUPLING,
37	399032A1	1	CAP,
38	390348A1	2	STEM, M33 orb x barb, Axle Drain, Inc. 39
39	86639046	2	O-RING, Cl 6, 29.6MM ID x 2.9 Thk, 29,6 ID x 2,9
40	S120426	1	SLEEVE,
41	L18337	2	STRAP, CABLE, 9.95"-12.1" lg, 15 in
42	86579691	1	ELBOW, 90є, 13/16"-18 ORFS x M18 x 1.5 ORB, Includes 43, 44
43	86639043	1	O-RING, 15,3 ID x 2,2
44	9992298	1	O-RING, -014, 90 Duro, .489" ID x .070" Thk,
45	86579676	6	CONNECTOR, HYD., 13/16"-16 ORFS x M18 x 1.5 ORB, 13/16 fc sl x 18 Or, Inc. 46, 47
46	86639043	6	O-RING, 15,3 ID x 2,2

08 -13 AXLE HYDRAULICS - LUBRICATION CIRCUIT (TJ375 HD, TJ425 POWER SHIFT, TJ450), BSN RVS001801

ссылка	Номер детали	Кол-во	Описание
47	9992298	6	O-RING, -014, 90 Duro, .489" ID x .070" Thk,
48	411996A1	1	HOSE ASSY., 508 mm (20 in)
49	416714A1	2	TUBE ASSY., Final Drive, Long
50	409614A1	1	TUBE ASSY., Return
51	253105A1	2	U-BOLT,
52	396490A1	2	U-BOLT,
53	86624184	16	WASHER, M8 x 16 x 1.6, 9 x 17 x 1,6 mm
54	86528579	8	NUT, LOCK, M8 x 1.25, Cl 10,
55	409609A1	2	PLATE,
57	L111928	3	CLAMP, Double
58	43362	6	NUT, M8, Cl 10,
59	370157A1	1	BODY, Jet Pump, See Figure(s) : 06-36 - 06-37
60	413207A1	2	ORIFICE, Pinnion Cover
61	128999	2	O-RING, -111, 70 Duro, .424" ID x .103" Thk, (5)
62	9672548	2	O-RING, -011, 70 Duro, .301" ID x .070" Thk,
31	9993141	2	O-RING, -012, 90 Duro, .364" ID x .070" Thk,
56	9993141	1	O-RING, -012, 90 Duro, .364" ID x .070" Thk,

08 -13(01) AXLE HYDRAULICS - LUBRICATION CIRCUIT (TJ375 HD, TJ425 POWER SHIFT, TJ450, TJ500)

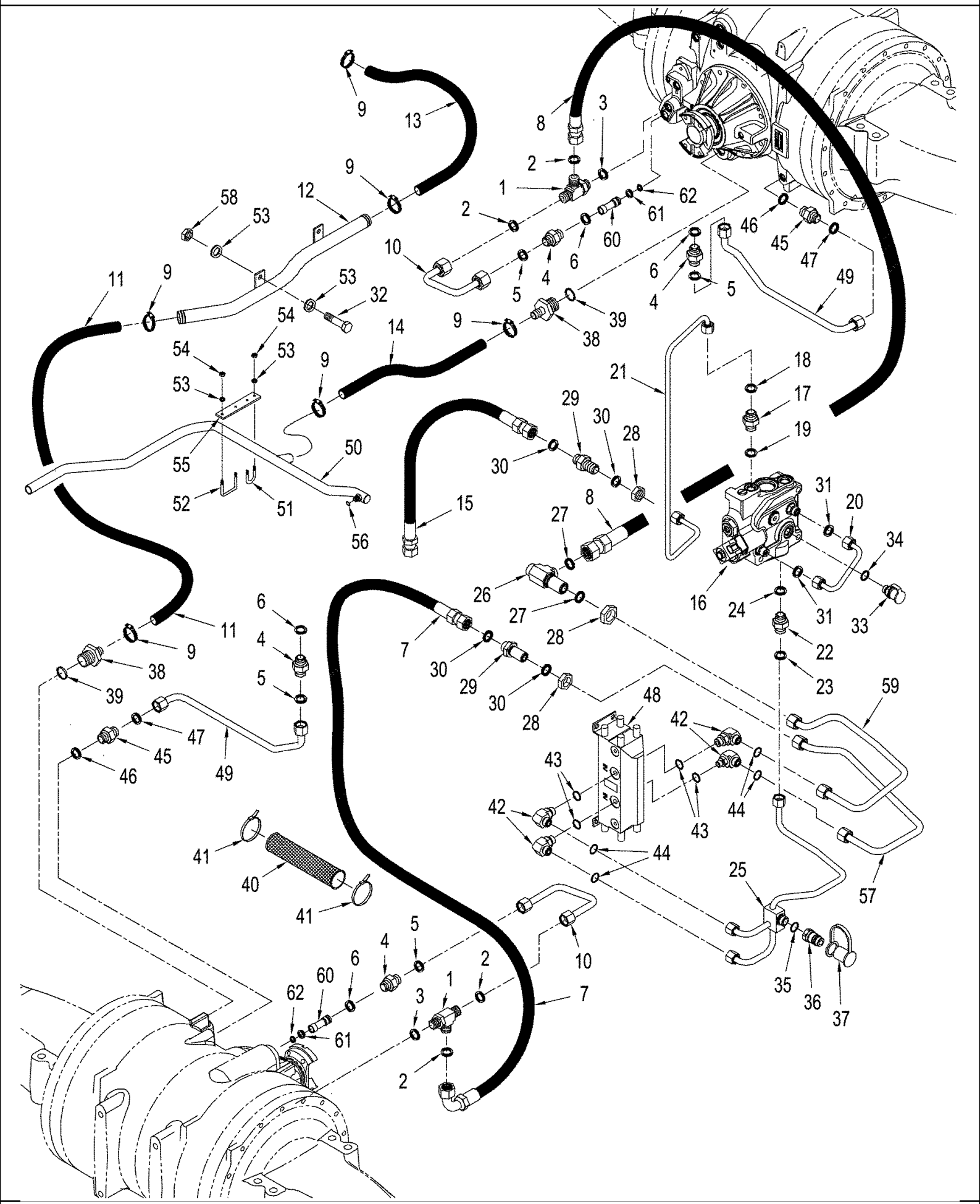

08 -13(01) AXLE HYDRAULICS - LUBRICATION CIRCUIT (TJ375 HD, TJ425 POWER SHIFT, TJ450, TJ500)

ссылка	Номер детали	Кол-во	Описание
1	86639058	2	TEE, 13/16"-16 ORFS x M22 x 1.5 ORB Run, 13/16 fc sl x 22 orb, Inc. 2, 3
2	9992298	4	O-RING, -014, 90 Duro, .489" ID x .070" Thk,
3	86639044	2	O-RING, Cl 6, 19.3MM ID x 2.2 Thk, 19,3 ID x 2,2 mm
4	86579676	4	CONNECTOR, HYD., 13/16"-16 ORFS x M18 x 1.5 ORB, 13/16 fc sl x 18 Or, Inc. 5, 6
5	9992298	2	O-RING, -014, 90 Duro, .489" ID x .070" Thk,
6	86639043	2	O-RING, 15,3 ID x 2,2
7	353607A3	1	HOSE ASSY., 2165 mm (85 in)
8	87413874	1	HOSE ASSY.,
9	507586	6	CLAMP, HOSE, #20, 0.81/1.75 Type F Worm, No. 20
10	451013A1	2	TUBE ASSY.,
11	353649A1	1	HOSE, 1346 mm (53 in), Cut From : 443082A1
12	416705A2	1	TUBE ASSY.,
13	340972A1	1	HOSE, 787 mm (31 in), Cut From : 443082A1
14	395933A1	1	HOSE, 356 mm (14 in), Cut From : S118383
15	388475A1	1	HOSE, 1067 mm (42 in)
16	411104A2	1	VALVE, Regulator, See Figure(s) : 08-22
17	86579675	1	CONNECTOR, HYD., 13/16"-16 ORFS x M16 x 1.5 ORB, 13/16 fc sl x M16 Or, Inc. 18, 19
18	9992298	1	O-RING, -014, 90 Duro, .489" ID x .070" Thk,
19	86642449	1	O-RING, Cl 6, 13.3MM ID x 2.2 Thk, 13,3 ID x 2,2
20	413338A1	1	TUBE ASSY.,
21	413334A1	1	TUBE ASSY.,
22	86579676	1	CONNECTOR, HYD., 13/16"-16 ORFS x M18 x 1.5 ORB, 13/16 fc sl x 18 Or, Inc. 23, 24
23	9992298	1	O-RING, -014, 90 Duro, .489" ID x .070" Thk,
24	86639043	1	O-RING, 15,3 ID x 2,2
25	449802A2	1	TUBE ASSY.,
26	86639079	1	ELBOW, 90є, 13/16"-16, ORFS, Blkhd, 90, 1/2 x blkhd, Inc. 27
27	9992298	2	O-RING, -014, 90 Duro, .489" ID x .070" Thk,
28	86639083	3	NUT, LOCK, 13/16"-16, ORFS Blkhd, 13/16 in
29	X4837565	2	FITTING, 13/16 fc sl x blkhd, Inc. 30
30	9992298	2	O-RING, -014, 90 Duro, .489" ID x .070" Thk,
32	43234	2	BOLT, Hex, M8 x 25, 10.9, Cap, HH, CL 10.9, M8 x 1.25 x 25
33	358968A1	1	COUPLING, M18 orb x 1,5, Diagnostic, Inc. 34
34	86639044	1	O-RING, Cl 6, 19.3MM ID x 2.2 Thk, 19,3 ID x 2,2 mm
35	86639043	1	O-RING, 15,3 ID x 2,2 mm
36	392690A1	1	COUPLING,
37	399032A1	1	CAP,
38	390348A1	2	STEM, M33 orb x barb, Axle Drain, Inc. 39
39	86639046	2	O-RING, Cl 6, 29.6MM ID x 2.9 Thk, 29,6 ID x 2,9
40	S120426	1	SLEEVE,
41	L18337	2	STRAP, CABLE, 9.95"-12.1" lg, 15 in
42	9992307	4	ELBOW, 90є, 13/16"-16 x 3/4"-18 Adj, ORFS, 90, 1/2 or x13/16 fc sl, Inc. 43, 44
43	86642448	1	O-RING, Cl 6, 9.3MM ID x 2.2 Thk, 9,3 ID x 2,2 Thk
44	9992298	1	O-RING, -014, 90 Duro, .489" ID x .070" Thk,
45	86579678	2	CONNECTOR, HYD., 13/16"-16 ORFS x M22 x 1.5 ORB, M22 x 13/16 fc sl, Inc. 46, 47
46	86639044	1	O-RING, Cl 6, 19.3MM ID x 2.2 Thk, 19,3 ID x 2,2 Thk

BTW RVS001801 & RVS003801

08 -13(01) AXLE HYDRAULICS - LUBRICATION CIRCUIT (TJ375 HD, TJ425 POWER SHIFT, TJ450, TJ500)

ссылка	Номер детали	Кол-во	Описание
47	9992298	1	O-RING, -014, 90 Duro, .489" ID x .070" Thk,
48	434727A1	1	MOTOR-PUMP, Axle Air / Lube
49	87400024	2	TUBE ASSY., Final Drive, Long
50	409614A1	1	TUBE ASSY., Return
51	253105A1	2	U-BOLT,
52	396490A1	2	U-BOLT,
53	86624184	16	WASHER, M8 x 16 x 1.6, 9 x 17 x 1,6 mm
54	86528579	8	NUT, LOCK, M8 x 1.25, Cl 10,
55	409609A1	2	PLATE,
57	449815A2	1	TUBE ASSY.,
58	43362	6	NUT, M8, Cl 10,
59	449813A2	1	TUBE ASSY.,
60	87400028	2	ORIFICE, Pinion Cover
61	128999	2	O-RING, -111, 70 Duro, .424" ID x .103" Thk, (5)
62	9672548	2	O-RING, -011, 70 Duro, .301" ID x .070" Thk,
31	9993141	2	O-RING, -012, 90 Duro, .364" ID x .070" Thk,
56	9993141	1	O-RING, -012, 90 Duro, .364" ID x .070" Thk,

08 -13(02) AXLE HYDRAULICS - LUBRICATION CIRCUIT (TJ375 HD, TJ425 POWER SHIFT, TJ450, TJ500)

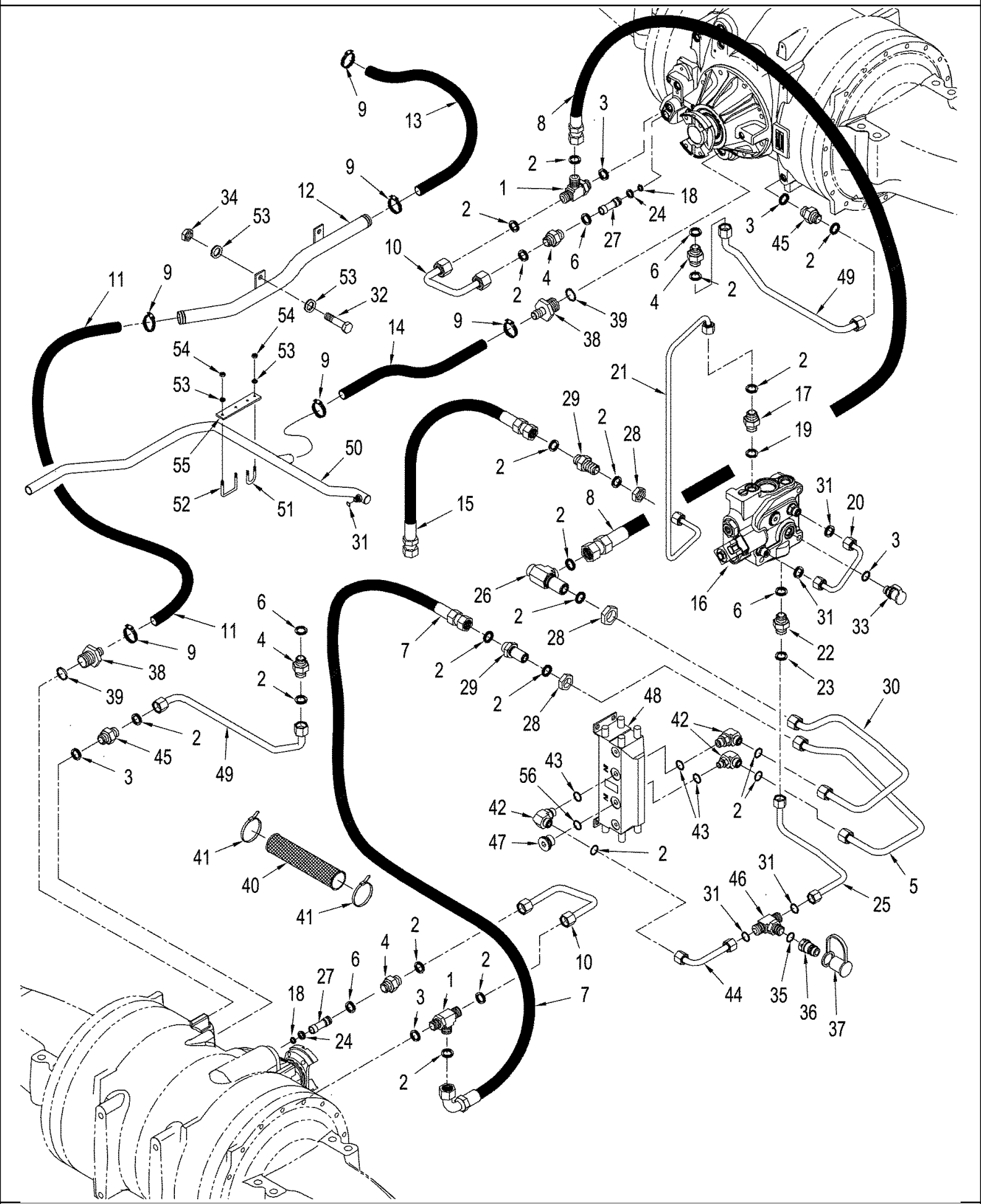

08 -13(02) AXLE HYDRAULICS - LUBRICATION CIRCUIT (TJ375 HD, TJ425 POWER SHIFT, TJ450, TJ500)

ссылка	Номер детали	Кол-во	Описание
1	86639058	2	TEE, 13/16"-16 ORFS x M22 x 1.5 ORB Run, 13/16 fc sl x 22 orb, Inc. 2, 3
2	9992298	15	O-RING, -014, 90 Duro, .489" ID x .070" Thk,
3	86639044	5	O-RING, Cl 6, 19.3MM ID x 2.2 Thk, 19,3 ID x 2,2 mm
4	86579676	4	CONNECTOR, HYD., 13/16"-16 ORFS x M18 x 1.5 ORB, 13/16 fc sl x 18 Or, Inc. 2, 6
5	449815A2	1	TUBE ASSY.,
6	86639043	3	O-RING, 15,3 ID x 2,2
7	353607A3	1	HOSE ASSY., 2165 mm (85 in)
8	87413874	1	HOSE ASSY.,
9	507586	6	CLAMP, HOSE, #20, 0.81/1.75 Type F Worm, No. 20
10	451013A1	2	TUBE ASSY.,
11	353649A1	1	HOSE, 1346 mm (53 in), Cut From : 443082A1
12	416705A2	1	TUBE ASSY.,
13	340972A1	1	HOSE, 787 mm (31 in), Cut From : 443082A1
14	395933A1	1	HOSE, 356 mm (14 in), Cut From : S118383
15	388475A1	1	HOSE, 1067 mm (42 in)
16	411104A2	1	VALVE, Regulator, See Figure(s) : 08-22
17	86579675	1	CONNECTOR, HYD., 13/16"-16 ORFS x M16 x 1.5 ORB, 13/16 fc sl x M16 Or, Inc. 2, 19
18	9672548	2	O-RING, -011, 70 Duro, .301" ID x .070" Thk,
19	86642449	1	O-RING, Cl 6, 13.3MM ID x 2.2 Thk, 13,3 ID x 2,2
20	413338A1	1	TUBE ASSY.,
21	413334A1	1	TUBE ASSY.,
22	86579676	1	CONNECTOR, HYD., 13/16"-16 ORFS x M18 x 1.5 ORB, 13/16 fc sl x 18 Or, Inc. 23, 24
23	9992298	1	O-RING, -014, 90 Duro, .489" ID x .070" Thk,
24	128999	2	O-RING, -111, 70 Duro, .424" ID x .103" Thk, (5)
25	87307544	1	TUBE ASSY.,
26	86639079	1	ELBOW, 90є, 13/16"-16, ORFS, Blkhd, 90, 1/2 x blkhd, Inc. 2
27	87400028	2	ORIFICE, Pinnion Cover
28	86639083	3	NUT, LOCK, 13/16"-16, ORFS Blkhd, 13/16 in
29	X4837565	2	FITTING, 13/16 fc sl x blkhd, Inc. 2
30	449813A2	1	TUBE ASSY.,
32	43234	2	BOLT, Hex, M8 x 25, 10.9, Cap, HH, CL 10.9, M8 x 1.25 x 25
33	358968A1	1	COUPLING, M18 orb x 1,5, Diagnostic, Inc. 3
34	43362	6	NUT, M8, Cl 10,
35	86639043	1	O-RING, 15,3 ID x 2,2 mm
36	392690A1	1	COUPLING,
37	399032A1	1	CAP,
38	390348A1	2	STEM, M33 orb x barb, Axle Drain, Inc. 39
39	86639046	2	O-RING, Cl 6, 29.6MM ID x 2.9 Thk, 29,6 ID x 2,9
40	S120426	1	SLEEVE,
41	L18337	2	STRAP, CABLE, 9.95"-12.1" lg, 15 in
42	9992307	4	ELBOW, 90є, 13/16"-16 x 3/4"-18 Adj, ORFS, 90, 1/2 or x13/16 fc sl, Inc. 43, 2
43	86642448	1	O-RING, Cl 6, 9.3MM ID x 2.2 Thk, 9,3 ID x 2,2 Thk
45	86579678	2	CONNECTOR, HYD., 13/16"-16 ORFS x M22 x 1.5 ORB, M22 x 13/16 fc sl, Inc. 2, 3
46	700-447	1	TEE, 13/16"-16 ORFS x M22 x 1.5 ORB Br, M22 or x 13/16" fc sl, Inc. 2
47	86590562	1	PLUG, Hex Soc, 3/4"-16 ORB, Soc Hd, 3/4" or, Inc. 56

08 -13(02) AXLE HYDRAULICS - LUBRICATION CIRCUIT (TJ375 HD, TJ425 POWER SHIFT, TJ450, TJ500)

сылка	Номер детали	Кол-во	Описание
48	434727A1	1	MOTOR-PUMP, Axle Air / Lube
49	87400024	2	TUBE ASSY., Final Drive, Long
50	409614A1	1	TUBE ASSY., Return
51	253105A1	2	U-BOLT,
52	396490A1	2	U-BOLT,
53	86624184	16	WASHER, M8 x 16 x 1.6, 9 x 17 x 1,6 mm
54	86528579	8	NUT, LOCK, M8 x 1.25, Cl 10,
55	409609A1	2	PLATE,
56	167266	1	O-RING, 12-1, 90 Duro, .924 ID x .116" Thk,
31	9993141	3	O-RING, -012, 90 Duro, .364" ID x .070" Thk,

08 -14 AXLE HYDRAULICS - LUBRICATION AND COOLING CIRCUIT (TJ375 HD, TJ425 POWER SHIFT, TJ450)

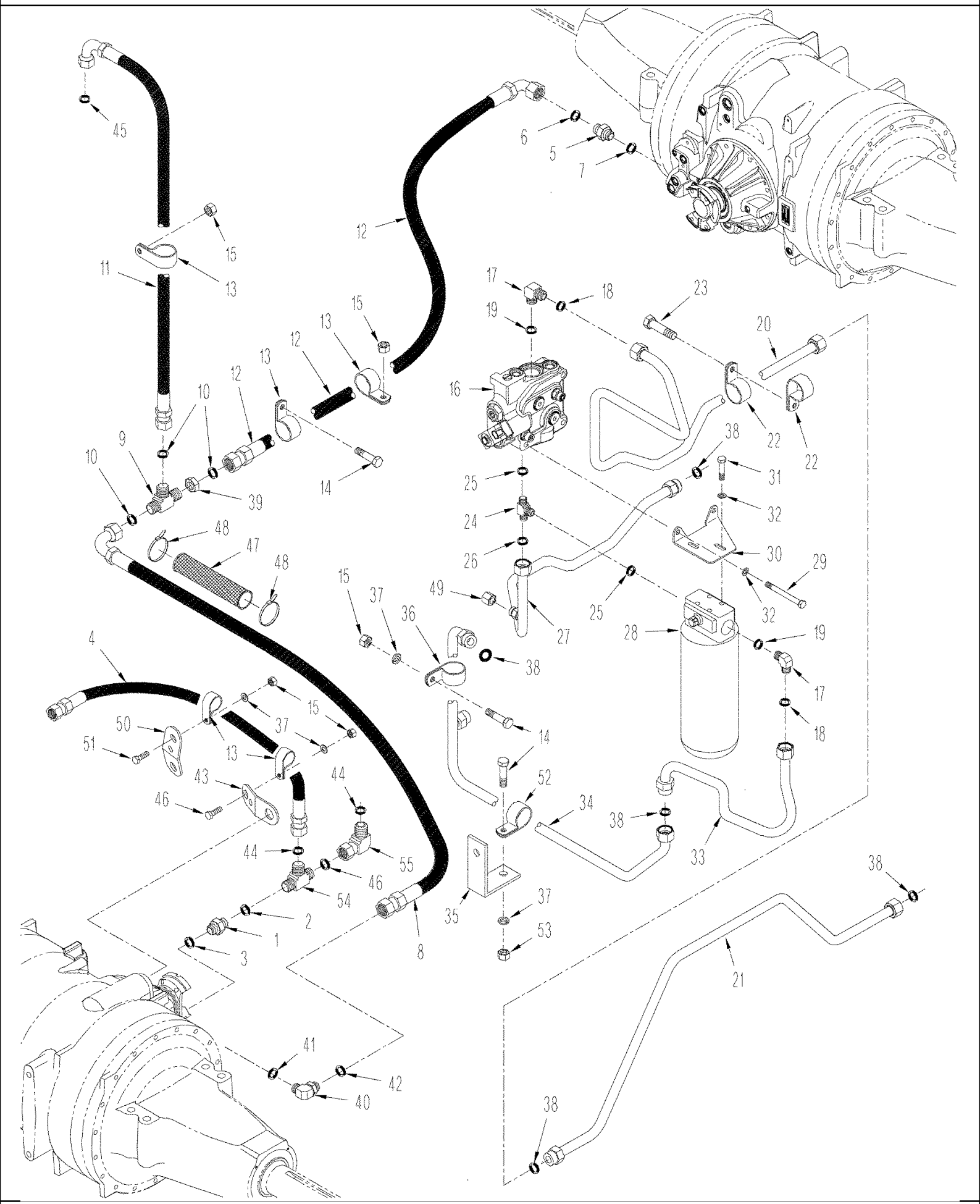

08 -14 AXLE HYDRAULICS - LUBRICATION AND COOLING CIRCUIT (TJ375 HD, TJ425 POWER SHIFT, TJ450)

ссылка	Номер детали	Кол-во	Описание
1	86579676	1	CONNECTOR, HYD., 13/16"-16 ORFS x M18 x 1.5 ORB, 11/16 fc sl x 18 Or, Inc. 2, 3
2	9992298	1	O-RING, -014, 90 Duro, .489" ID x .070" Thk,
3	86639043	1	O-RING, 15,3 ID x 2,2
4	436864A1	1	HOSE ASSY., 2019 mm (79 in)
5	86579678	1	CONNECTOR, HYD., 13/16"-16 ORFS x M22 x 1.5 ORB, 13/16 fc sl x 22 or, Inc. 6, 7
6	9992298	1	O-RING, -014, 90 Duro, .489" ID x .070" Thk,
7	86639044	1	O-RING, Cl 6, 19.3MM ID x 2.2 Thk, 19,3 ID x 2,2 mm
8	377522A1	1	HOSE, 2162 mm (85 in)
9	86639080	1	TEE, 13/16"-16 ORFS, Blkd Run, M12 fc sl x blkhd fc sl, Inc. 10
10	9992298	3	O-RING, -014, 90 Duro, .489" ID x .070" Thk,
11	352111A2	1	HOSE ASSY., 984 mm (37 in)
12	381678A1	1	HOSE ASSY., 1597 mm (63 in)
13	86637979	3	CLAMP, 13/16", Insul, 3/8" Bolt, P-type
14	43234	4	BOLT, Hex, M8 x 25, 10.9, Cap, HH, CL 10.9, M8 x 1.25 x 25
15	43362	7	NUT, M8, Cl 10,
16	411104A1	1	VALVE, Regulator, See Figure(s) : 08-22
17	86580180	2	ELBOW, 90є, 1 7/16"-12 ORFS x M33 x 2 ORB, Includes 18, 19
18	9824050	2	O-RING, -021, 90 Duro, .926" ID x .070" Thk,
19	86639046	2	O-RING, Cl 6, 29.6MM ID x 2.9 Thk, 29,6 ID x 2,9
20	416712A1	1	TUBE ASSY.,
21	416701A1	1	TUBE ASSY.,
22	R15257	2	CLAMP,
23	9780069	2	BOLT, Hex, M8 x 40, 10.9, Cap, HH, CL 10.9, M8 x 1.25 x 40
24	328232A1	1	TEE,
25	86639046	2	O-RING, Cl 6, 29.6MM ID x 2.9 Thk, 29,6 ID x 2,9
26	9824050	1	O-RING, -021, 90 Duro, .926" ID x .070" Thk,
27	416703A1	1	TUBE ASSY.,
28	86991559	1	FILTER ASSY, See Figure(s) : 08-04
29	86639150	3	BOLT, Hex, M10 x 150, 10.9, M10 x 150; 10.9
30	413322A1	1	BRACKET,
31	9861444	4	BOLT, Hex, M10 x 20, 10.9, Full Thd, M10 x 20; 10.9
32	86625251	4	WASHER, M10 x 18 x 1.6, 11 x 18 x 1.6 mm
33	416699A1	1	TUBE ASSY.,
34	416708A1	1	TUBE ASSY.,
35	417270A1	2	BRACKET,
36	86637977	1	CLAMP, 1", Insul, 5/16" Bolt, 1 ID
37	86624184	4	WASHER, M8 x 16 x 1.6, 9 x 17 x 1.6 mm
38	9824050	5	O-RING, -021, 90 Duro, .926" ID x .070" Thk,
39	86639083	1	NUT, LOCK, 13/16"-16, ORFS Blkhd, 13/16 in
40	86579692	1	ELBOW, 90є, 13/16"-18 ORFS x M22 x 1.5 ORB, 90, 13/16 fc sl x 22 or, Inc. 41, 42
41	86639044	1	O-RING, Cl 6, 19.3MM ID x 2.2 Thk, 19.3 ID x 2.2 mm
42	9992298	1	O-RING, -014, 90 Duro, .489" ID x .070" Thk,
43	417271A1	1	BRACKET,
44	9992298	2	O-RING, -014, 90 Duro, .489" ID x .070" Thk,
45	86624184	1	WASHER, M8 x 16 x 1.6, 9 x 17 x 1.6 mm

08 -14 AXLE HYDRAULICS - LUBRICATION AND COOLING CIRCUIT (TJ375 HD, TJ425 POWER SHIFT, TJ450)

ссылка	Номер детали	Кол-во	Описание
46	120104	1	BOLT, Hex, M8 x 20, 8.8,
47	S120426	1	SLEEVE, 24"
48	L18337	2	STRAP, CABLE, 9.95"-12.1" lg, 15 in
49	9840576	1	CAP, 1"-14 ORFS, 5/8, With Electronic Three Point Hitch
50	417272A1	1	BRACKET,
51	43235	1	BOLT, Hex, M8 x 30, 10.9, Cap, HH, CL 10.9, M8 x 1.25 x 30
52	86637995	2	CLAMP, 1 1/16", Insul, 3/8" Bolt,
53	86528579	2	NUT, LOCK, M8 x 1.25, Cl 10,
54	86514261	1	TEE, 13/16"-16 ORFS x 13/16"-16 Fem Sw Run, M12 x 13/16 fc sl, Inc. 44
55	84989383	1	ELBOW, 90є, 13/16"-16 ORFS x 13/16"-16 Fem Sw, 90, 13/16 fc sl x Swl, Inc. 44
	719517003	1	KIT, Motor Return / Power Beyond, Inc. 54, 55, See Figure(s) : 08-45, 08-46

08 -14(01) AXLE HYDRAULICS - AIR AND LUBRICATION CIRCUIT (TJ375 HD, TJ425 POWER SHIFT, TJ450, TJ500)

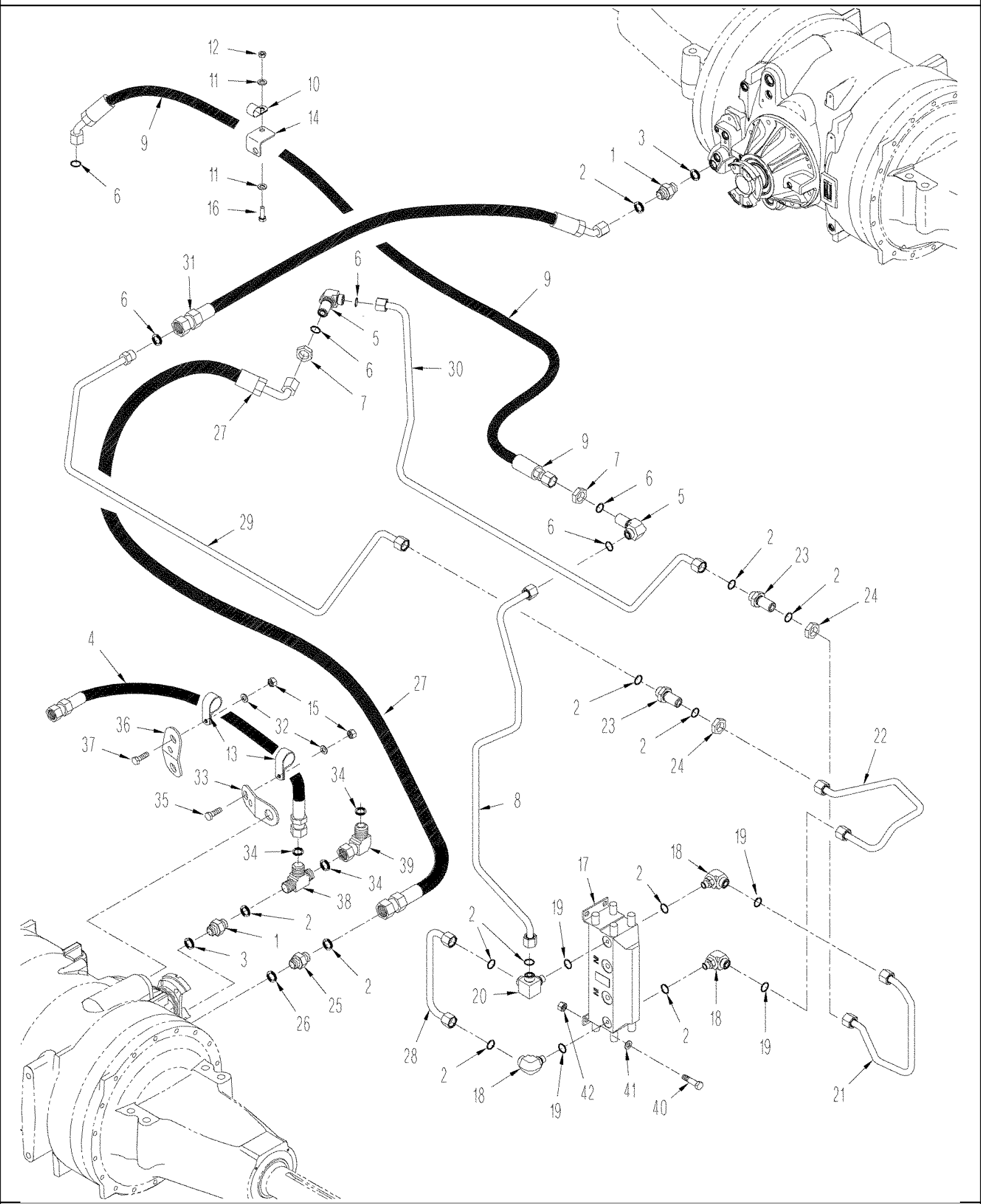

08 -14(01) AXLE HYDRAULICS - AIR AND LUBRICATION CIRCUIT (TJ375 HD, TJ425 POWER SHIFT, TJ450, TJ500)

ссылка	Номер детали	Кол-во	Описание
1	86579676	2	CONNECTOR, HYD., 13/16"-16 ORFS x M18 x 1.5 ORB, 11/16 fc sl x 18 Or, Inc. 2, 3
2	9992298	12	O-RING, -014, 90 Duro, .489" ID x .070" Thk,
3	86639043	1	O-RING, 15,3 ID x 2,2
4	436864A1	1	HOSE ASSY., 2019 mm (79 in)
5	86639079	2	ELBOW, 90є, 13/16"-16, ORFS, Blkhd, 90, 13/16 fc sl x blkhd, Inc. 6, 7
6	9992298	3	O-RING, -014, 90 Duro, .489" ID x .070" Thk,
7	86639083	1	NUT, LOCK, 13/16"-16, ORFS Blkhd, 13/16
8	449821A2	1	TUBE ASSY.,
9	86992953	1	HOSE ASSY., 1715 mm (67-1/2 in)
10	86637979	3	CLAMP, 13/16", Insul, 3/8" Bolt,
11	86624184	2	WASHER, M8 x 16 x 1.6,
12	43362	2	NUT, M8, Cl 10,
13	86637979	3	CLAMP, 13/16", Insul, 3/8" Bolt, P-type
14	416102A1	1	SUPPORT, Bracket
15	43362	7	NUT, M8, Cl 10,
16	43234	1	BOLT, Hex, M8 x 25, 10.9, M8 x 1-1/4; 10
17	434727A1	2	MOTOR-PUMP, Axle Air / Lube
18	87016877	3	ELBOW, 90є, 13/16"-16 x 9/16"-18, Adj, ORFS, 90, M12 or x 13/16 fc sl, Inc. 2, 19
19	86642448	3	O-RING, Cl 6, 9.3MM ID x 2.2 Thk, 9,3 ID x 2,2 Thk
20	450905A1	1	TEE, Special, 1/2 or x fc sl, Inc. 2, 19
21	449817A2	1	TUBE ASSY.,
22	86992542	1	TUBE ASSY.,
23	X4837565	2	FITTING, 13/16 fc sl x blkhd, Inc. 2
24	86639083	2	NUT, LOCK, 13/16"-16, ORFS Blkhd, Lock
25	86579678	1	CONNECTOR, HYD., 13/16"-16 ORFS x M22 x 1.5 ORB, M22 or x 13/16 fc sl, Inc. 2, 26
26	86639044	1	O-RING, Cl 6, 19.3MM ID x 2.2 Thk, 19,3 ID x 2,2 Thk
27	87400117	1	HOSE ASSY., 2299 mm (90-1/2 in)
28	449794A1	1	TUBE ASSY.,
29	449825A1	1	TUBE ASSY.,
30	449823A1	1	TUBE ASSY.,
31	86993937	4	HOSE ASSY., 1194 mm (47 in)
32	86624184	4	WASHER, M8 x 16 x 1.6, 9 x 17 x 1.6 mm
33	417271A1	1	BRACKET,
34	9992298	2	O-RING, -014, 90 Duro, .489" ID x .070" Thk,
35	120104	1	BOLT, Hex, M8 x 20, 8.8,
36	417272A1	1	BRACKET,
37	43235	1	BOLT, Hex, M8 x 30, 10.9, Cap, HH, CL 10.9, M8 x 1.25 x 30
38	86514261	1	TEE, 13/16"-16 ORFS x 13/16"-16 Fem Sw Run, M12 x 13/16 fc sl, Inc. 34
39	84989383	1	ELBOW, 90є, 13/16"-16 ORFS x 13/16"-16 Fem Sw, 90, 13/16 fc sl x Swl, Inc. 34
40	9515003	4	BOLT, Hex, M10 x 30, 10.9, Full Thd,
41	86625252	4	WASHER, M10 x 21.5 x 2.5, HT, 11 x 21 x 2,5 mm
42	86500689	4	NUT, M10, Cl 10, M10; 10

TJ375 TRACTOR - Hydraulic System

08 -15 AXLE HYDRAULICS - COOLING CIRCUIT, ASN RVS001801

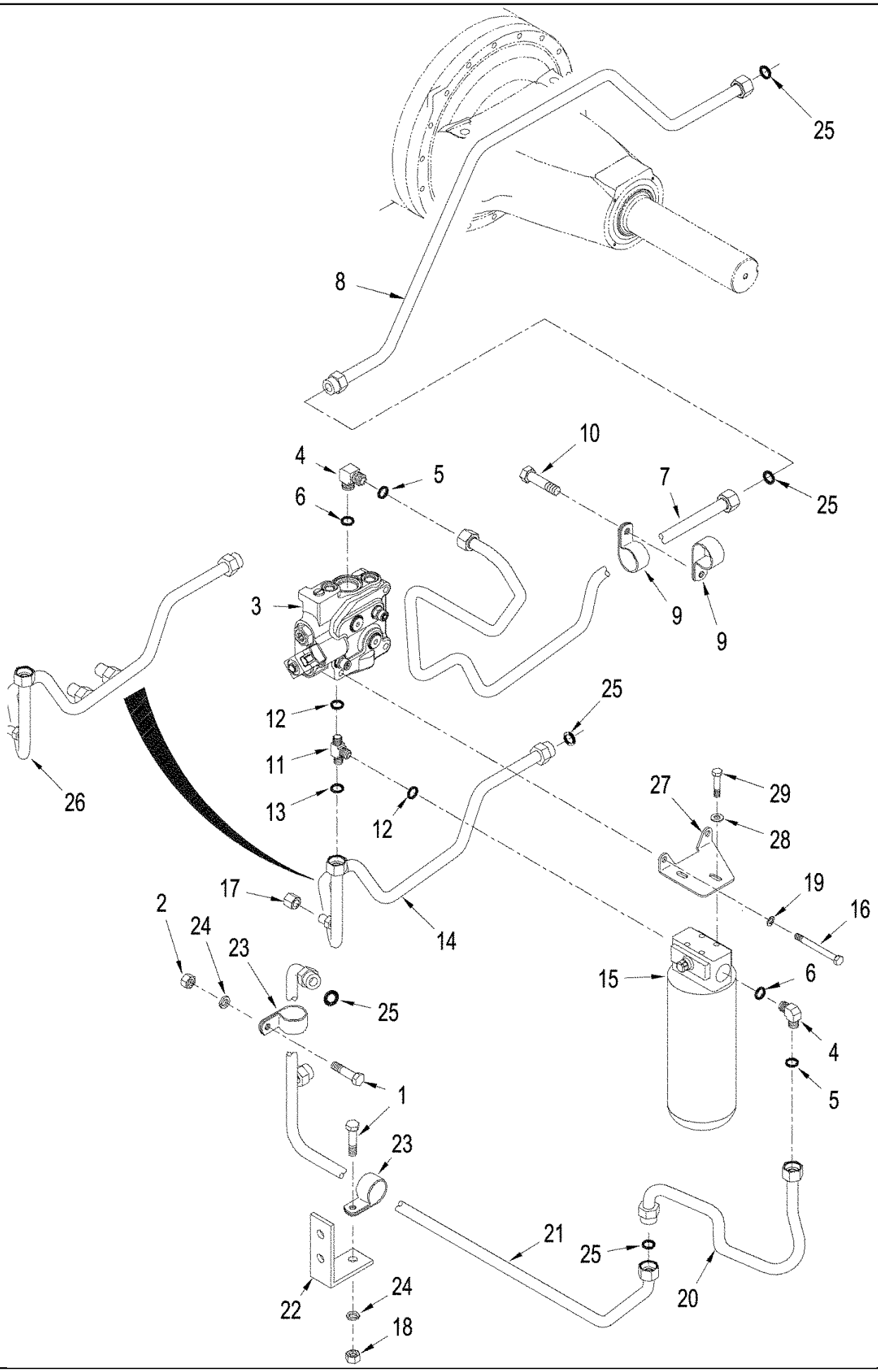

TJ375 TRACTOR - Hydraulic System

08 -15 AXLE HYDRAULICS - COOLING CIRCUIT, ASN RVS001801

ссылка	Номер детали	Кол-во	Описание
1	43234	4	BOLT, Hex, M8 x 25, 10.9, Cap, HH, CL 10.9, M8 x 1.25 x 25
2	43362	3	NUT, M8, Cl 10,
3	411104A2	1	VALVE, Regulator, See Figure(s) : 08-22
4	86580180	2	ELBOW, 90є, 1 7/16"-12 ORFS x M33 x 2 ORB, Includes 18, 19
5	9824050	2	O-RING, -021, 90 Duro, .926" ID x .070" Thk,
6	86639046	2	O-RING, Cl 6, 29.6MM ID x 2.9 Thk, 29,6 ID x 2,9
7	418818A1	1	TUBE ASSY.,
8	416701A1	1	TUBE ASSY.,
9	R15257	2	CLAMP,
10	9780069	2	BOLT, Hex, M8 x 40, 10.9, Cap, HH, CL 10.9, M8 x 1.25 x 40
11	328232A1	1	TEE,
12	86639046	2	O-RING, Cl 6, 29.6MM ID x 2.9 Thk, 29,6 ID x 2,9
13	9824050	1	O-RING, -021, 90 Duro, .926" ID x .070" Thk,
14	87310970	1	TUBE, HYD, Pump Supply
15	86991559	1	FILTER ASSY, See Figure(s) : 08-04
16	86639150	3	BOLT, Hex, M10 x 150, 10.9, M10 x 150; 10.9
17	9840576	1	CAP, 1"-14 ORFS, 5/8, With Electronic Three Point Hitch
18	412250	2	NUT, LOCK, M8 x 1.25, Cl 8,
19	86625251	2	WASHER, M10 x 18 x 1.6, 11 x 18 x 1.6 mm
20	418820A1	1	TUBE ASSY.,
21	416708A1	1	TUBE ASSY.,
22	451507A1	2	BRACKET,
23	86637977	3	CLAMP, 1", Insul, 5/16" Bolt, 1 ID
24	86624184	3	WASHER, M8 x 16 x 1.6, 9 x 17 x 1.6 mm
25	9824050	5	O-RING, -021, 90 Duro, .926" ID x .070" Thk,
26	418816A2	1	TUBE ASSY., Pump Supply, Used with Mega Flow Application
27	413322A1	1	BRACKET, Mounting
28	86625251	4	WASHER, M10 x 18 x 1.6, 11 x 18 x 1,6 mm
29	9861444	4	BOLT, Hex, M10 x 20, 10.9, Full Thd, Cap, HH, M10 x 20, CL10.9

TJ375 TRACTOR - Hydraulic System

08 -21 HYDRAULIC TANK

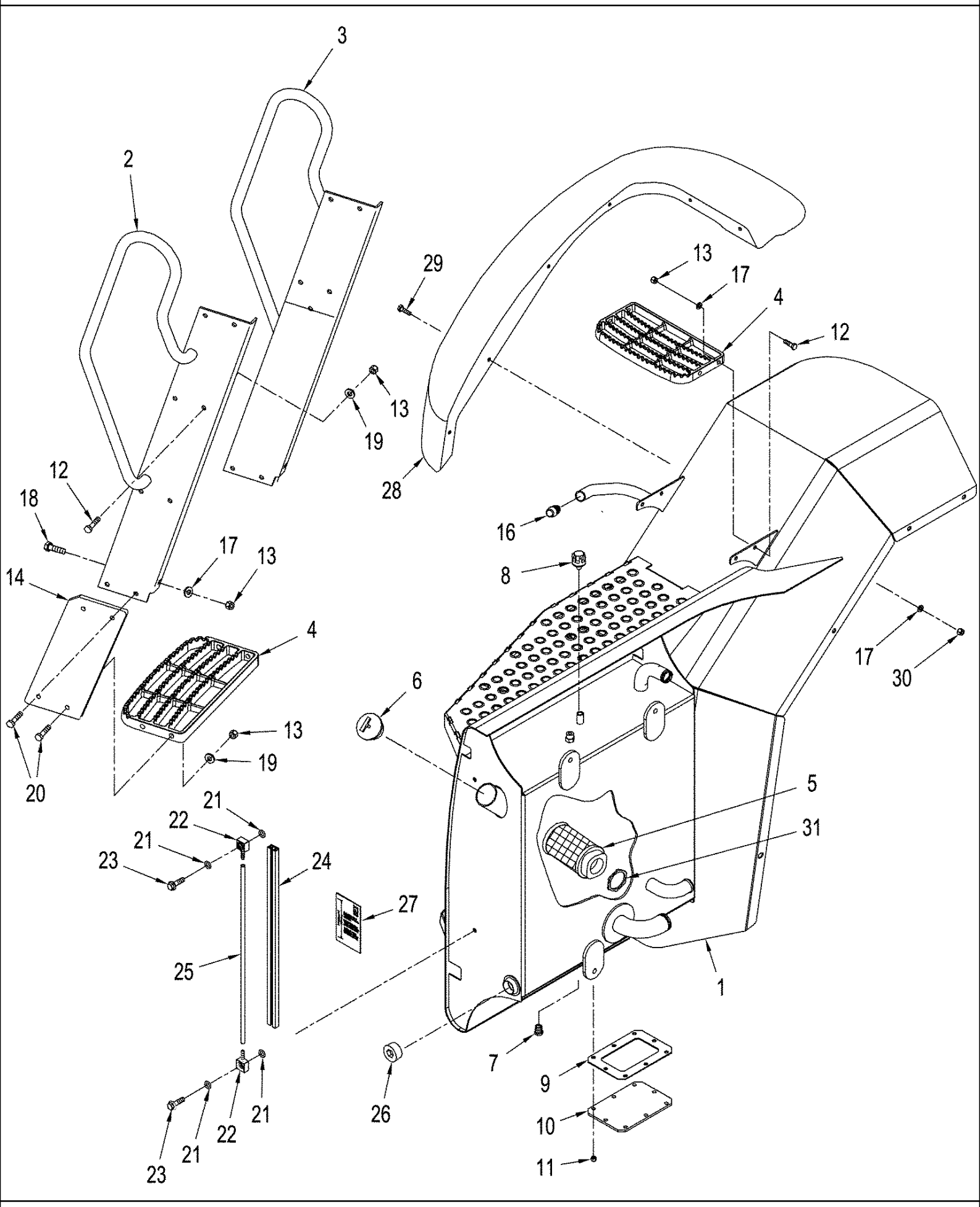

TJ375 TRACTOR - Hydraulic System

08 -21 HYDRAULIC TANK

ссылка	Номер детали	Кол-во	Описание
1	87313205	1	TANK,
2	401395A1	1	LADDER, Rear, LH
3	401394A1	1	LADDER, Front, LH
4	87301185	5	STEP,
5	87408715	1	FILTER, STRAINER, Oil
6	254253A1	1	CAP, Oil Filter, if used (2.5" ID), Order this Cap for Models Built BSN RVS003887. If Tank has been Replaced by Tank 87313205 Order Cap 325737A1.
6	325737A1	1	CAP, Oil Filler, if used (2.0" ID)
7	86637723	1	PLUG, Hex Hd, 1/2"-14 NPTF, 1/2 PT
8	1971726C1	2	BREATHER,
9	435031A1	1	GASKET, Cover
10	435030A1	1	COVER, Access
11	86528579	8	NUT, LOCK, M8 x 1.25, Cl 10,
12	86624978	16	BOLT, Hex, M10 x 35, 10.9, Full Thd,
13	86514720	26	NUT, LOCK, M10 x 1.5
14	376530A1	2	SUPPORT, Step
15	V43471	2	BOLT, Carriage, Short Neck, CL 8.8, M10 x 1.5 x 20
16	363226A1	1	BUMPER,
17	86624176	2	WASHER, M10 x 20 x 2, M10
18	86636816	2	BOLT, CARRIAGE, M10 x 25; 8.8
19	86639325	8	WASHER, M10 x 24.5 x 3, HT,
20	86508618	8	BOLT, Hex, M10 x 45, 10.9, Cap, HH, CL 10.9, M10 x 1.5 x 45
21	337248A1	4	O-RING,
22	352767A1	2	CONNECTOR, HYD., Sight Gauge
23	86511845	2	BOLT, Hex Flg, M10 x 35, 8.8, Cap, Flg Hd, CL 8.8, M10 x 1.5 x 35
24	349869A1	1	CHANNEL, Sight Gauge
25	355179A1	1	HOSE, Sight Gauge
26	86637725	1	PLUG, Hex Soc, 1 1/4"-11 1/2 NPTF, Socket, 1-1/4
27	434856A1	1	DECAL, Hydraulic Oil Level, See Figure(s) : 09-59
28	397307A2	1	FENDER ASSY., Flare, Fender, LH
29	86624978	6	BOLT, Hex, M10 x 35, 10.9, Full Thd,
30	86500689	6	NUT, M10, Cl 10, M10; 10.9
31	435032A1	1	NUT, LOCK,

08 -22 REGULATOR VALVE ASSY

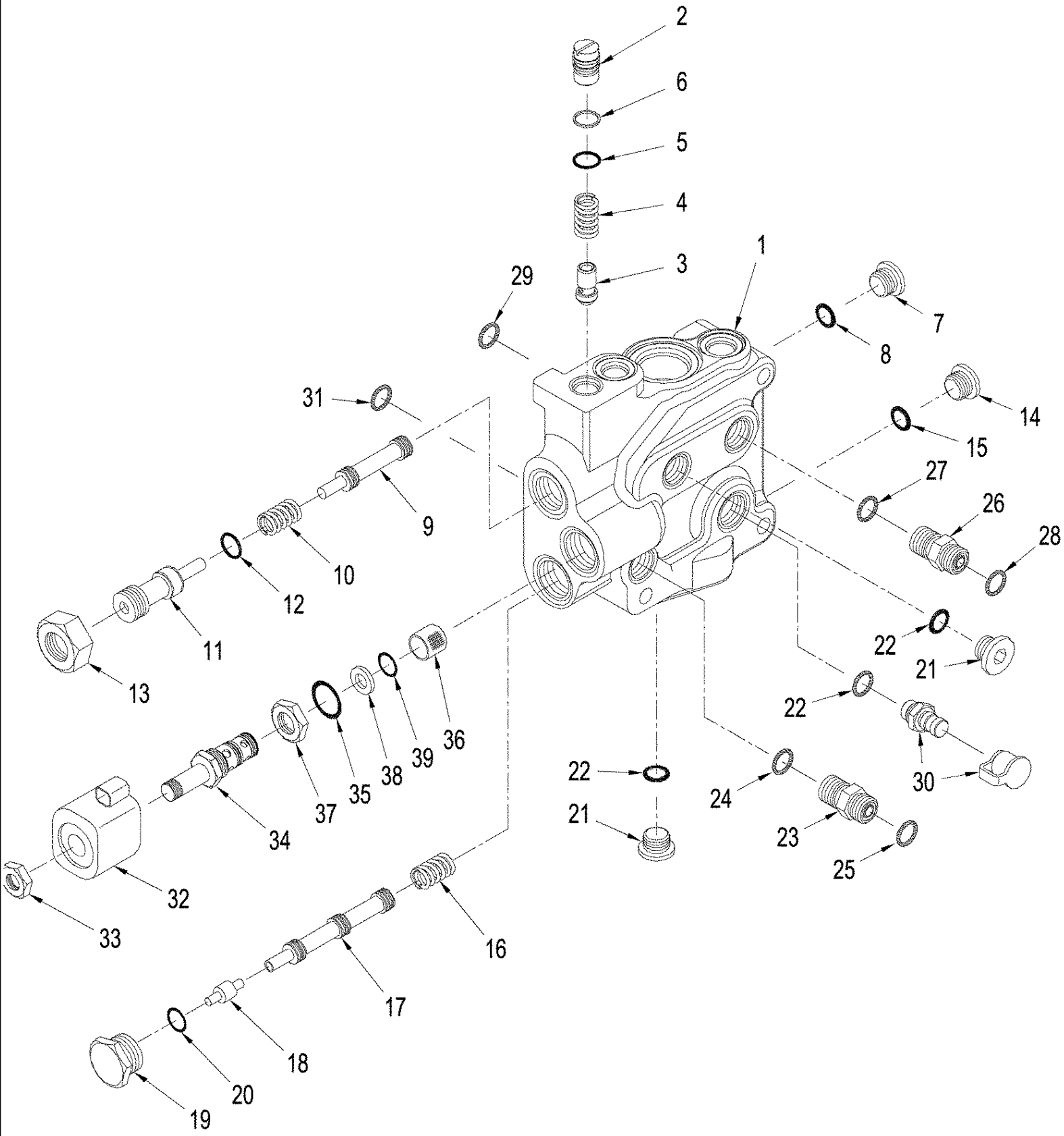

TJ375 TRACTOR - Hydraulic System

08 -22 REGULATOR VALVE ASSY

ссылка	Номер детали	Кол-во	Описание
	411104A2	1	VALVE, Regulator, Inc. 1 - 36
1	NSS	1	NOT SERVICED SEPARATELY, Body
	1542563C1	1	VALVE, CHECK, Inc. 2 - 6
2	1994580C1	1	PLUG,
3	1543329C1	1	POPPET, VALVE,
4	1994581C1	1	SPRING,
5	165212	1	O-RING, -015, 90 Duro, .551" ID x .070" Thk, 90 Duro, .551" ID x .070" Thk
6	G108723	1	RING,
7	221579A1	1	PLUG, Hex Soc, M22 x 1.5, ORB, Includes 8
8	86639044	1	O-RING, Cl 6, 19.3MM ID x 2.2 Thk, 19.3 ID x 2.2 mm
9	119182A3	1	SPOOL,
10	176312A1	1	SPRING,
11	313941A1	1	PLUG,
12	167266	1	O-RING, 12-1, 90 Duro, .924 ID x .116" Thk,
13	86637729	1	NUT, LOCK, Blkhd, 1 1/16"-12, Lock, 1-1/16
	344573A1	1	PLUG, Inc. 14 - 15
14	NSS	1	NOT SERVICED SEPARATELY, Plug
15	86639044	1	O-RING, Cl 6, 19.3MM ID x 2.2 Thk, 19.3 ID x 2.2 mm
16	330105A1	1	SPRING,
17	330103A1	1	SPOOL,
18	330104A1	1	PIN,
19	9841223	1	PLUG, Hex Soc, 1 1/16"-12 ORB, Includes 20
20	9617873	1	O-RING, 6-1, 90 Duro, .468" ID x .078" Thk,
21	221578A1	3	PLUG, Hex Soc, M18 x 1.5, ORB, Includes 22, BSN RVS003801
22	86639043	3	O-RING, 15.3 ID x 2.2
	339487A2	1	CONNECTOR, HYD., Inc. 23 - 25
23	NSS	1	NOT SERVICED SEPARATELY, Adapter, 11/16 fc sl x 14 orb
24	86639042	1	O-RING, Cl 6, 11.3MM ID x 2.2 Thk, 11.3 ID x 2.2
26	86579671	1	CONNECTOR, HYD., 11/16"-16 ORFS x M14 x 1.5 ORB, 11/16 fc sl x 14 Or, Inc. 27, 28
27	9992298	1	O-RING, -014, 90 Duro, .489" ID x .070" Thk,
29	86629585	1	O-RING, -118, 70 Duro, .862" ID x .103" Thk,
30	358968A1	1	COUPLING, Diagnostic, Inc. 22, ASN RVS003801
31	14457081	2	O-RING, -112, Cl 7, .487" ID x .103" Thk,
	87330331	1	SOLENOID, Inc. 32 - 39
32	298614A1	1	SOLENOID,
33	NSS	1	NOT SERVICED SEPARATELY, Nut
34	NSS	1	NOT SERVICED SEPARATELY, Valve, Cartridge, 2 gpm
35	167266	1	O-RING, 12-1, 90 Duro, .924 ID x .116" Thk,
36	NSS	1	NOT SERVICED SEPARATELY, Filter, Screen
37	87330336	1	SOLENOID, Solenoid Holder
38	G35540	1	RING, Backup
39	9991976	1	O-RING, -018, 90 Duro, .739" ID x .070" Thk, CL6
25	9993141	1	O-RING, -012, 90 Duro, .364" ID x .070" Thk,
28	9993141	1	O-RING, -012, 90 Duro, .364" ID x .070" Thk,

TJ375 TRACTOR - Hydraulic System

08 -23 TOW BLOCK VALVE ASSY

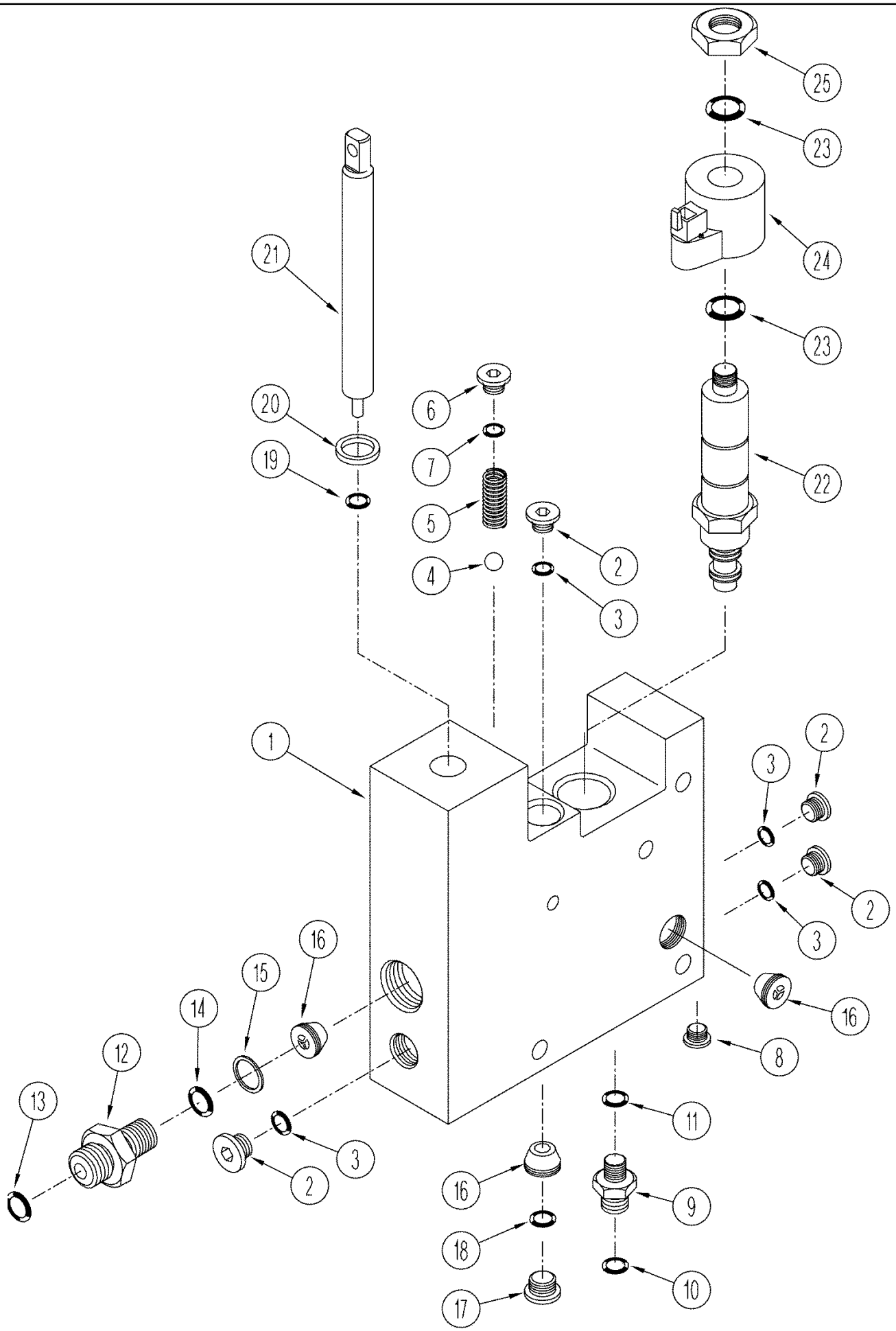

TJ375 TRACTOR - Hydraulic System

08 -23 TOW BLOCK VALVE ASSY

ссылка	Номер детали	Кол-во	Описание
	319774A4	1	VALVE, Control, Tow Block, Inc. 1 - 27
1	NSS	1	NOT SERVICED SEPARATELY, Body
2	221576A1	4	PLUG, Hex Soc, M14 x 1.5, ORB, Includes 3
3	86639042	4	O-RING, Cl 6, 11.3MM ID x 2.2 Thk, 11.3 ID x 2.2
4	86637959	1	BALL, 6mm Dia, 6 mm
5	352025A1	1	SPRING,
6	221573A1	1	PLUG, Hex Soc, M12 x 1.5, ORB, M12 orb x 13, Includes 7
7	86642448	1	O-RING, Cl 6, 9.3MM ID x 2.2 Thk, 9.3 ID x 2.2
8	282839A1	1	PLUG, Expansion, M8
9	86579676	1	CONNECTOR, HYD., 13/16"-16 ORFS x M18 x 1.5 ORB, 13/16 fc sl x 18 Or, Inc. 10, 11
11	86639043	1	O-RING, 15.3 ID x 2.2
12	86579678	1	CONNECTOR, HYD., 13/16"-16 ORFS x M22 x 1.5 ORB, 13/16 fc sl x 22 or, Inc. 13, 14
13	9992298	1	O-RING, -014, 90 Duro, .489" ID x .070" Thk,
14	86639044	1	O-RING, Cl 6, 19.3MM ID x 2.2 Thk, 19.3 ID x 2.2 mm
15	86637953	1	WASHER, 11/32" x 11/16" x 0.89", HDN, 11/32 x 11/16 x 3/32
16	1994615C2	3	VALVE, CHECK,
17	221579A1	1	PLUG, Hex Soc, M22 x 1.5, ORB, Includes 18
18	86639044	1	O-RING, Cl 6, 19.3MM ID x 2.2 Thk, 19.3 ID x 2.2 mm
19	86637741	1	O-RING, -208, 70 Duro, .609" ID x .139" Thk, 5/8 ID x 1 8
20	A63399	1	SEAL,
21	326300A1	1	SPOOL,
	234783A8	1	SOLENOID, Inc. 22 - 25
22	NSS	1	NOT SERVICED SEPARATELY, Solenoid
23	86637770	2	O-RING, -115, Cl 7, .674" ID x .103" Thk, 11/16 ID x 3/32
24	NSS	1	NOT SERVICED SEPARATELY, Coil
25	252462A2	1	NUT,
10	9993141	1	O-RING, -012, 90 Duro, .364" ID x .070" Thk,

TJ375 TRACTOR - Hydraulic System

08 -24 CONTROLS - HYDRAULIC REMOTE, MANUAL REMOTE, BSN RVS001927

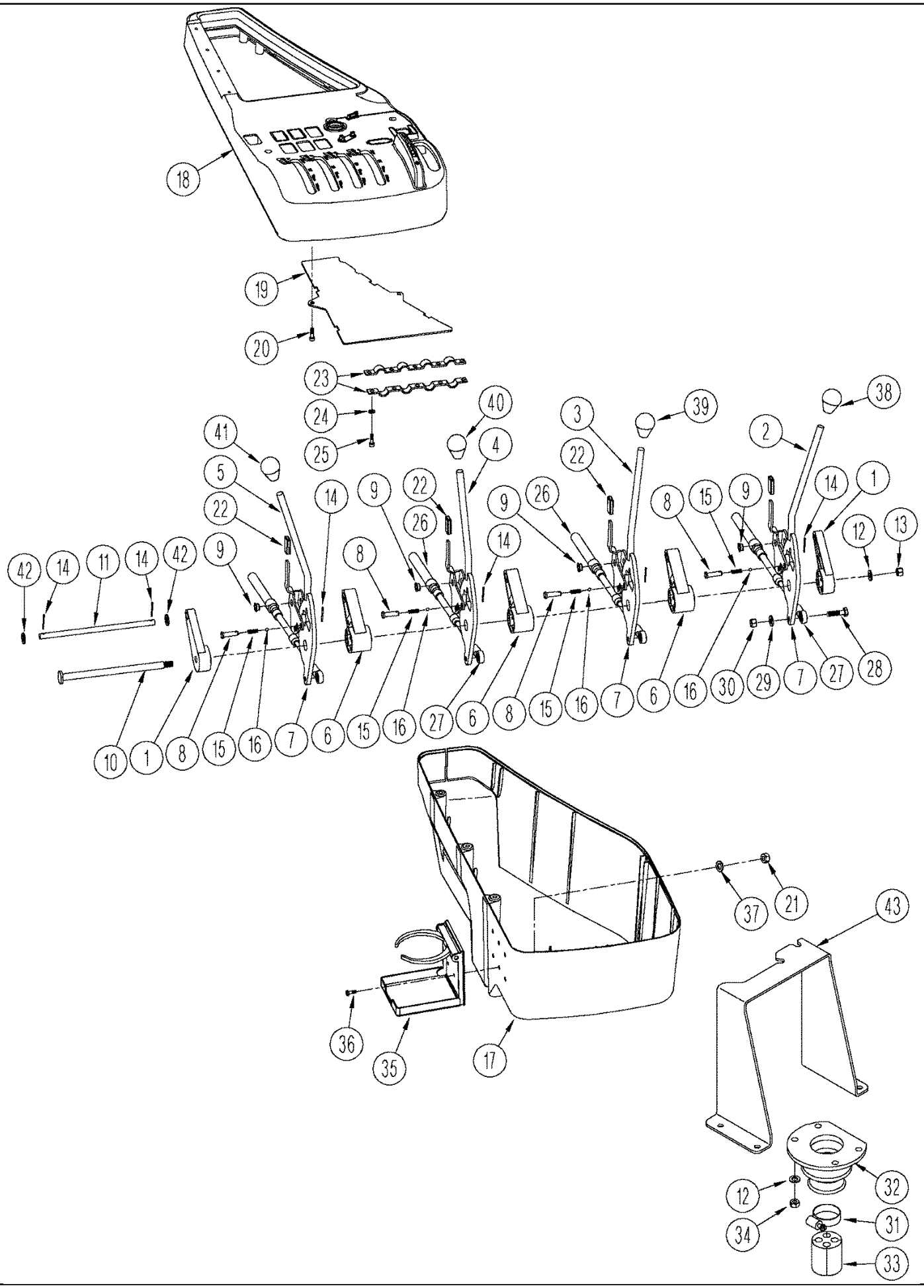

TJ375 TRACTOR - Hydraulic System

08 -24 CONTROLS - HYDRAULIC REMOTE, MANUAL REMOTE, BSN RVS001927

ссылка	Номер детали	Кол-во	Описание
1	318775A1	2	BUSHING,
2	318507A2	1	LEVER,
3	318508A2	1	LEVER,
4	318509A2	1	LEVER,
5	318510A2	1	LEVER,
6	318778A1	3	BUSHING,
7	318780A1	4	LEVER, Detent
8	86637789	4	PIN, CLEVIS, 1/4" x .906", 1/4 x 29/32
9	318781A1	8	BEARING, Nylon
10	227665A1	1	ROD,
11	227666A3	1	ROD,
12	86624184	11	WASHER, M8 x 16 x 1.6, 9 x 17 x 1.6 mm
13	86528579	1	NUT, LOCK, M8 x 1.25, Cl 10,
14	86523849	4	PIN, SPLIT (COTTER), 1/16" x 3/4",
15	232377A1	4	SPRING,
16	86637959	4	BALL, 6mm Dia, 6 mm
17	405227A1	1	HOUSING, Lower, Without Flex Control
17	435237A1	1	HOUSING, Lower, With Flex Control
18	414443A2	1	COVER ASSY,
19	315897A1	1	PANEL,
20	86639119	2	SCREW, SELF TAPPING, Pan Hd, M4.2 x 16, M4.2 x 16
21	100012	4	NUT, M4, Cl 8,
22	320961A1	4	CAP,
23	318774A2	2	BLOCK,
24	86625261	5	WASHER, M5 x 10 x 1, 5.5 x 10 x 1 mm
25	86625261	5	WASHER, M5 x 10 x 1, M5 x 12
26	331002A3	4	CABLE,
27	L53928	4	EYE,
28	86637935	4	BOLT, Hex, 1/4"-20 x 1", G8, Full Thd, 1/4 x 1; 8
29	87361	4	WASHER, 1/4", SAE,
30	280129	4	NUT, LOCK, 1/4"-20, GC,
31	86637706	1	CLAMP, HOSE, #32, 1.56/2.50 Type F Worm, W/liner, 1-9/16 - 2-1/2
32	248339A1	1	NO DESCRIPTION, Boot
33	248338A2	1	RETAINER,
34	43362	4	NUT, M8, Cl 10,
35	331649A1	1	HOLDER, Cup
36	44334	4	SCREW, Cross Pan Hd, M4 x 12,
37	86624179	4	WASHER, M4, 4.3 x 9 x 0.8 mm
38	417496A2	1	KNOB, Green
39	417497A2	1	KNOB, Blue
40	417498A2	1	KNOB, Ginger
41	440019A1	1	KNOB, Control, Grey
42	86637651	2	NUT, 5/16", Push-on, Push-On
43	363157A1	1	BRACKET, Mounting, Flow Control

TJ375 TRACTOR - Hydraulic System

08 -25 LINKAGE HYDRAULIC REMOTE CONTROL, BSN RVS001927

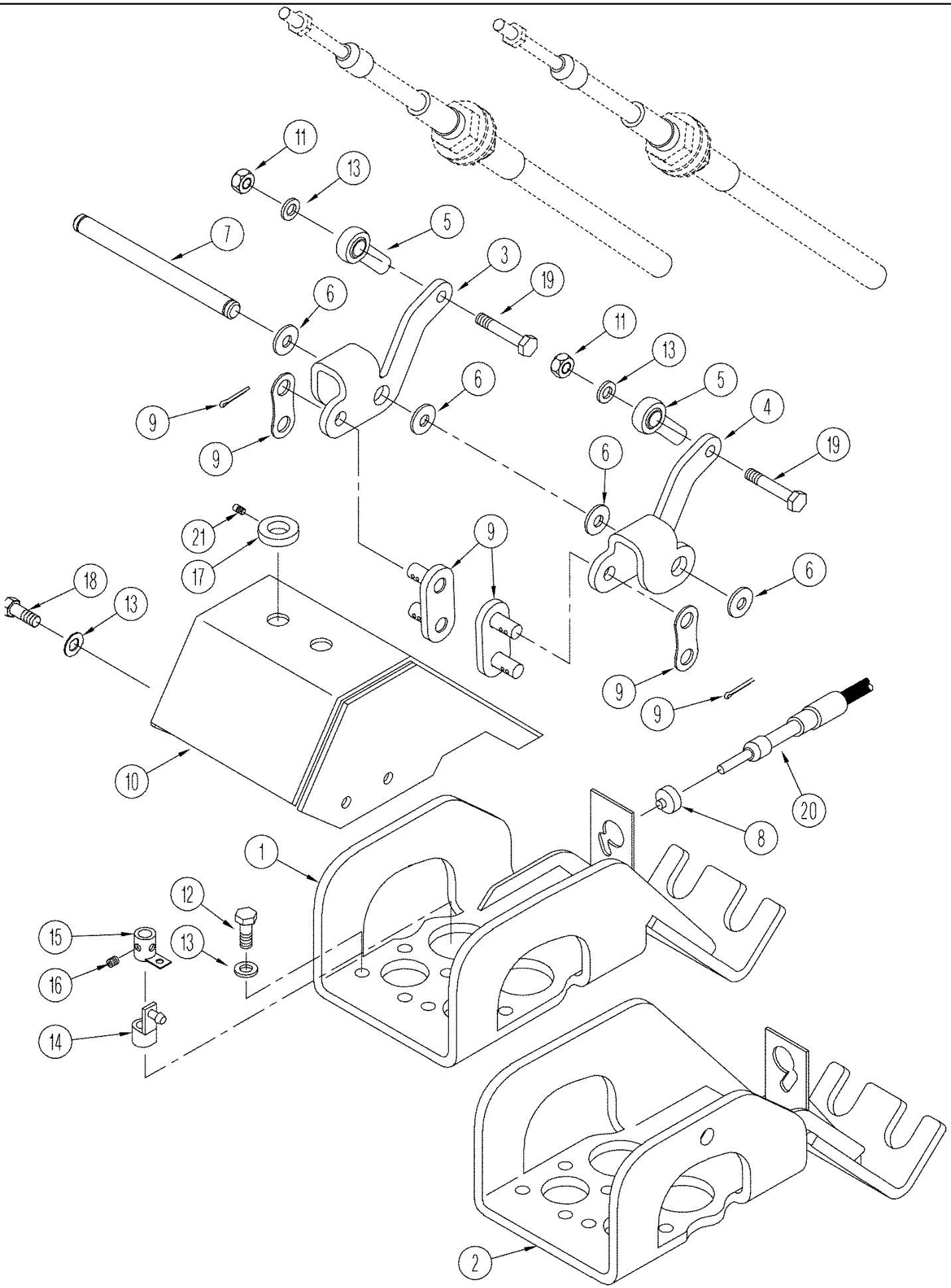

TJ375 TRACTOR - Hydraulic System

08 -25 LINKAGE HYDRAULIC REMOTE CONTROL, BSN RVS001927

ссылка	Номер детали	Кол-во	Описание
1	359789A2	1	SUPPORT ASSY., Bracket, RH
2	359783A2	1	SUPPORT ASSY., Bracket, LH
3	367538A1	2	ARM ASSY., LH
4	367545A1	2	ARM ASSY., RH
5	L53928	4	EYE,
6	86625251	8	WASHER, M10 x 18 x 1.6, 11 x 18 x 1.6 mm
7	359804A1	2	PIN,
8	A67295	4	PLUG,
9	349340A1	4	LINK,
10	417564A1	2	SHIELD,
11	86500688	4	NUT, M6, Cl 10,
12	86508568	8	BOLT, Hex, M6 x 16, 8.8,
13	86624181	20	WASHER, M6, 6.6 x 12 x 1.6 mm
14	359791A1	1	COLLAR, , With Flex Control
15	435473A1	1	RETAINER,
16	86639304	1	SET SCREW, Hex Soc, M4 x 6, Cup Pt, M4 x 6
17	A160814	3	KNOB, Flow Control
18	86977726	8	BOLT, Hex, M6 x 12, 8.8,
19	86639038	4	BOLT, Hex, M6 x 25, 10.9, M6 x 25; 10.9
20	363508A1	1	CABLE, Flow Control
21	86637943	3	SET SCREW, Hex Soc, #10-32 x 5/8", Set, 5/8

08 -26 HYDRAULIC REMOTE HOSES ELECTRONIC REMOTE

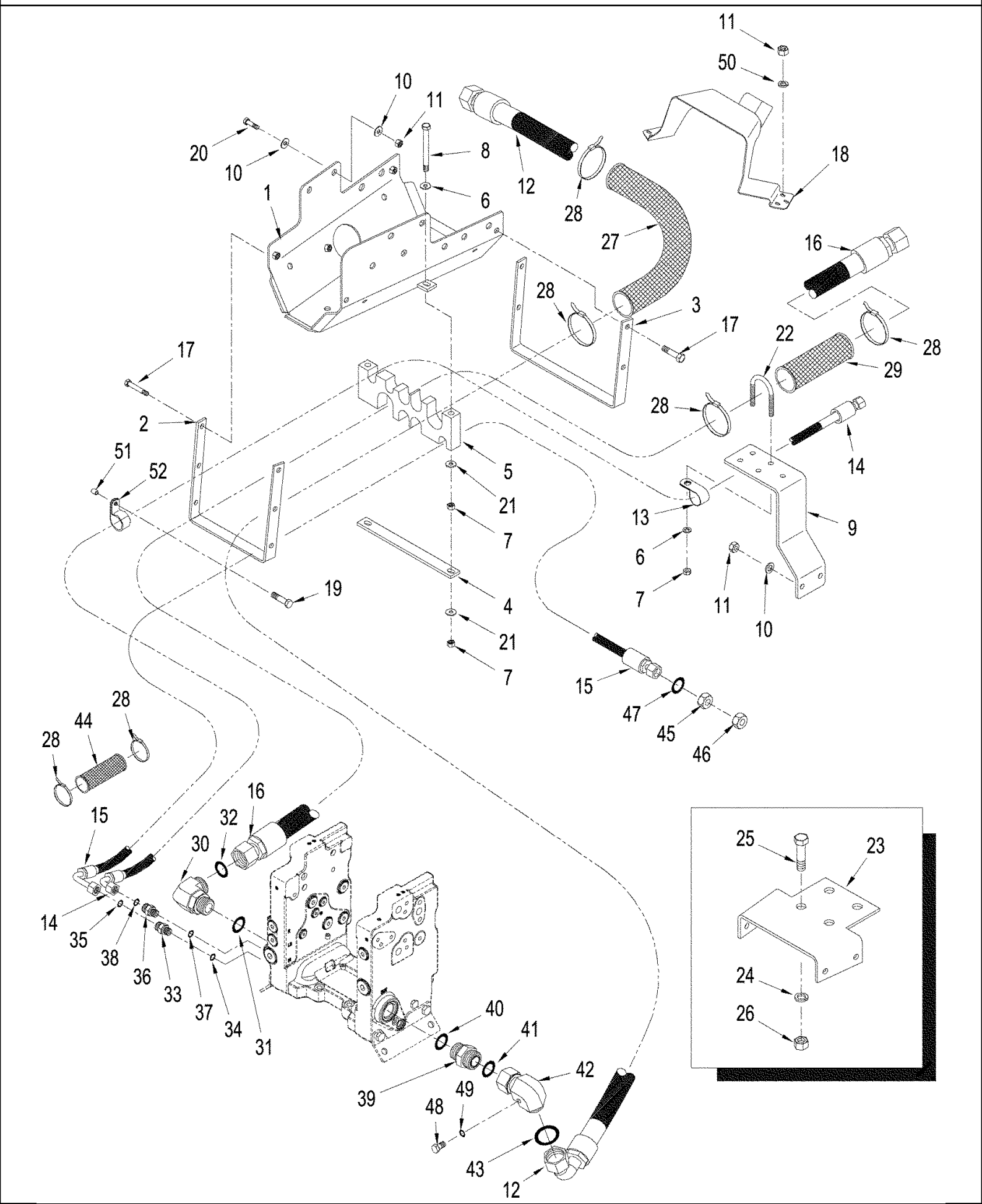

TJ375 TRACTOR - Hydraulic System

08 -26 HYDRAULIC REMOTE HOSES ELECTRONIC REMOTE

ссылка	Номер детали	Кол-во	Описание
1	87341572	1	BRACKET, Hoses
2	405517A1	1	BRACKET,
3	405518A1	1	BRACKET,
4	405520A1	1	PLATE,
5	362419A1	1	CLAMP,
6	86624184	7	WASHER, M8 x 16 x 1.6, 9 x 17 x 1.6 mm
7	43362	3	NUT, M8, Cl 10,
8	86639040	2	BOLT, Hex, M8 x 100, 10.9, Full Thd, M8 x 100; 10.9
9	405519A1	1	BRACKET,
10	86624176	10	WASHER, M10 x 20 x 2, M10
11	86500689	8	NUT, M10, Cl 10, M10; 10.9
12	360134A2	1	HOSE ASSY., 3238 mm (127 in)
13	9827902	1	CLAMP, 1", Insul, 3/8" Bolt,
14	433213A1	1	HOSE ASSY., 4191 mm (165 in)
15	352599A3	1	HOSE ASSY., 3422 mm (138 in)
16	360135A3	1	HOSE ASSY., 4153 mm (163-1/2 in)
17	43127	4	BOLT, Hex, M8 x 25, 8.8,
18	405521A1	1	SHIELD,
19	86625003	1	BOLT, Hex, M8 x 50, 10.9, M8 x 50
20	9515003	4	BOLT, Hex, M10 x 30, 10.9, Full Thd,
21	86625263	5	WASHER, M8 x 20 x 1.6,
22	352892A1	2	U-BOLT, U
23	404604A1	1	BRACKET, , Without Power Takeoff
24	86625266	4	WASHER, M17.5 x 30 x 4, HT,
25	827-16090	4	BOLT, Hex, M16 x 90, 10.9,
26	392530	4	NUT, M16, Cl 10,
27	S120426	1	SLEEVE, 610 mm (24 in)
28	L18337	6	STRAP, CABLE, 9.95"-12.1" lg, 15 in
29	S120426	1	SLEEVE,
30	86580180	1	ELBOW, 90є, 1 7/16"-12 ORFS x M33 x 2 ORB, Includes 31, 32
31	86639046	1	O-RING, Cl 6, 29.6MM ID x 2.9 Thk, 29.6 ID x 2.9
32	9824050	1	O-RING, -021, 90 Duro, .926" ID x .070" Thk,
33	339487A2	1	CONNECTOR, HYD., 11/16 fc sl x 14 Or, Inc. 34, 35
34	86639042	1	O-RING, Cl 6, 11.3MM ID x 2.2 Thk, 11.3 ID x 2.2
35	9993141	1	O-RING, -012, 90 Duro, .364" ID x .070" Thk,
36	86580177	1	CONNECTOR, HYD., 11/16"-16 ORFS x M12 x 1.5 ORB, Includes 37, 38
37	86642448	1	O-RING, Cl 6, 9.3MM ID x 2.2 Thk, 9.3 ID x 2.2
38	9993141	1	O-RING, -012, 90 Duro, .364" ID x .070" Thk,
39	86580179	1	CONNECTOR, HYD., 1 7/16"-12 ORFS x M22 x 2 ORB, Includes 40, 41
40	86639046	1	O-RING, Cl 6, 29.6MM ID x 2.9 Thk, 29.6 ID x 2.9
41	9824050	1	O-RING, -021, 90 Duro, .926" ID x .070" Thk,
42	311834A1	1	ELBOW, 90, 1-7/16 fc sl x swl, Inc. 43
43	9824050	1	O-RING, -021, 90 Duro, .926" ID x .070" Thk,
44	S120426	1	SLEEVE, 325 mm (13 in)
45	86639095	1	NUT, TUBE, 1"-14, ORFS, 5/8

08 -26 HYDRAULIC REMOTE HOSES ELECTRONIC REMOTE

ссылка	Номер детали	Кол-во	Описание
46	86622968	1	REDUCER, 13/16"-16 Male x 1"-14 Fem, ORFS, 5/8 fcsl x 1/2; Inc. 47
47	9992069	1	O-RING, -016, 90 Duro, .614" ID x .070" Thk,
48	86589753	1	PLUG, M18 x 15, Inc. 49
49	86639043	1	O-RING, 15.3 ID x 2.2
50	86625252	4	WASHER, M10 x 21.5 x 2.5, HT, 11 x 21 x 2.5 mm
51	371838A1	1	SPACER,
52	86594406	1	CLAMP, 5/8", Insul, 3/8" Bolt,

08 -27 HYDRAULIC REMOTE HOSES MANUAL REMOTE, BSN RVS001927

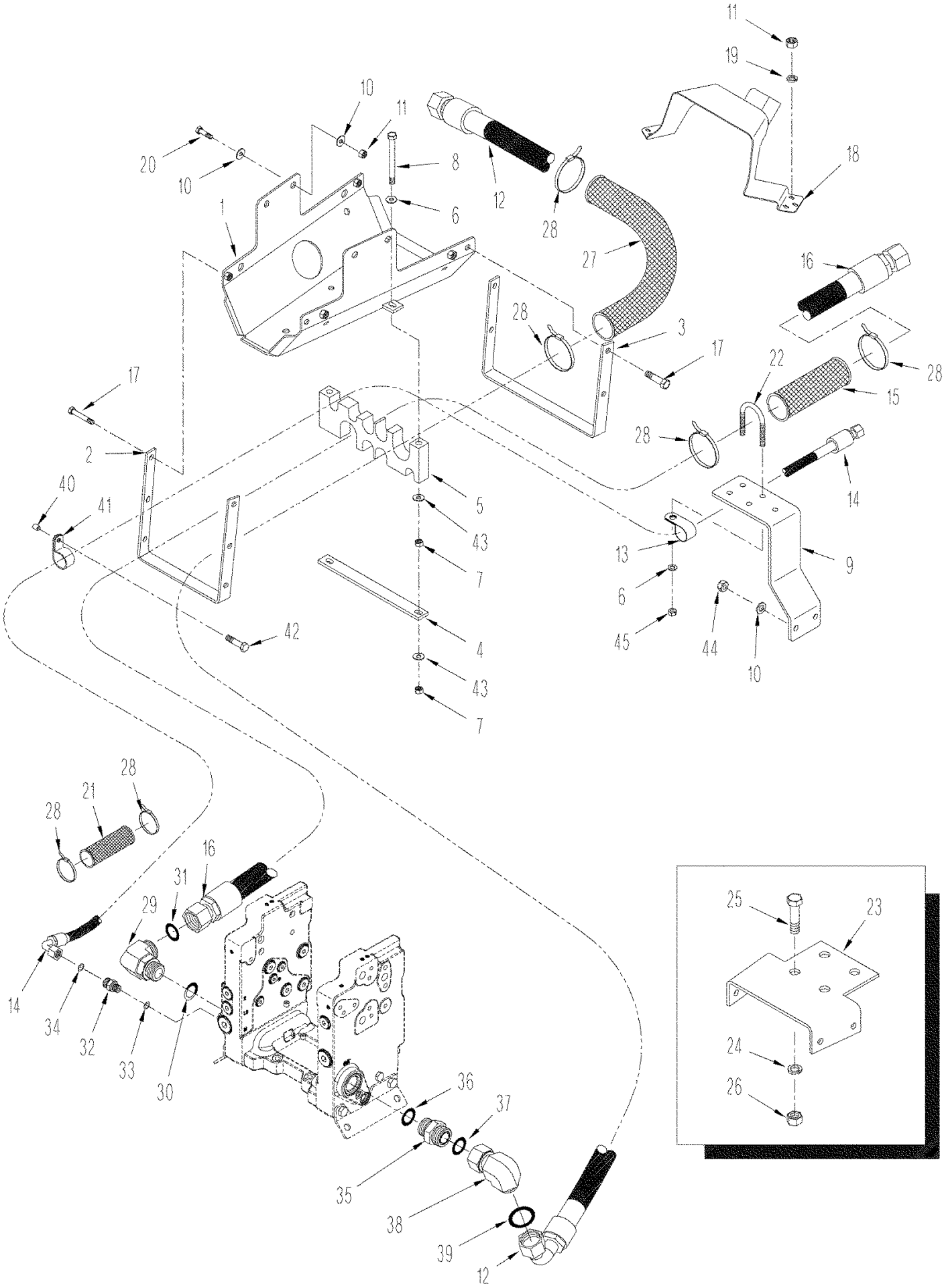

TJ375 TRACTOR - Hydraulic System

08 -27 HYDRAULIC REMOTE HOSES MANUAL REMOTE, BSN RVS001927

ссылка	Номер детали	Кол-во	Описание
1	433355A1	1	BRACKET, Hose
2	405517A1	1	BRACKET,
3	405518A1	1	BRACKET,
4	405520A1	1	PLATE,
5	362419A1	1	CLAMP,
6	86624184	4	WASHER, M8 x 16 x 1.6, 9 x 17 x 1.6 mm
7	43362	3	NUT, M8, Cl 10,
8	86639040	2	BOLT, Hex, M8 x 100, 10.9, Full Thd, M8 x 100; 10.9
9	405519A1	1	BRACKET,
10	86624176	10	WASHER, M10 x 20 x 2, M10
11	86500689	8	NUT, M10, Cl 10, M10; 10.9
12	360134A2	1	HOSE ASSY., 3238 mm (127 in)
13	9827902	1	CLAMP, 1", Insul, 3/8" Bolt,
14	433213A2	1	HOSE ASSY., 4191 mm (165 in)
15	S120426	1	SLEEVE,
16	360135A3	1	HOSE ASSY., 4153 mm (163-1/2 in)
17	43127	1	BOLT, Hex, M8 x 25, 8.8,
18	405521A1	1	SHIELD,
19	86625252	4	WASHER, M10 x 21.5 x 2.5, HT, 11 x 21 x 2.5 mm
20	9515003	8	BOLT, Hex, M10 x 30, 10.9, Full Thd,
21	S120426	1	SLEEVE, 325 mm (13 in)
22	352892A1	2	U-BOLT,
23	404604A1	1	BRACKET, , Without Power Takeoff
24	86625266	4	WASHER, M17.5 x 30 x 4, HT,
25	120246	4	SCREW, M16 x 100
26	392530	4	NUT, M16, Cl 10,
27	S120426	1	SLEEVE, 610 mm (24 in)
28	L18331	6	STRAP, CABLE,
29	86580180	1	ELBOW, 90є, 1 7/16"-12 ORFS x M33 x 2 ORB, Includes 30, 31
30	86639046	1	O-RING, Cl 6, 29.6MM ID x 2.9 Thk, 29.6 ID x 2.9
31	9824050	1	O-RING, -021, 90 Duro, .926" ID x .070" Thk,
32	339487A2	1	CONNECTOR, HYD., 11/16 fc sl x 12 Or, Inc. 33, 34
33	86642448	1	O-RING, Cl 6, 9.3MM ID x 2.2 Thk, 9,3 ID x 2,2
35	86580179	1	CONNECTOR, HYD., 1 7/16"-12 ORFS x M22 x 2 ORB, Includes 36, 37
36	86639046	1	O-RING, Cl 6, 29.6MM ID x 2.9 Thk, 29.6 ID x 2.9
37	9824050	1	O-RING, -021, 90 Duro, .926" ID x .070" Thk,
38	311834A1	1	ELBOW, 90, 1-7/16 fc sl x swl, Inc. 39
39	9824050	1	O-RING, -021, 90 Duro, .926" ID x .070" Thk,
40	371838A1	1	SPACER,
41	86594406	1	CLAMP, 5/8", Insul, 3/8" Bolt,
42	86625005	1	BOLT, Hex, M8 x 60, 10.9,
43	86625263	5	WASHER, M8 x 20 x 1.6,
44	412141	2	NUT, LOCK, M10 x 1.5, Cl 8,
45	412250	4	NUT, LOCK, M8 x 1.25, Cl 8,
34	9993141	1	O-RING, -012, 90 Duro, .364" ID x .070" Thk,

08 -28(1) STANDARD HYDRAULICS - PUMP LUBRICATION CIRCUIT, MANUAL SHIFT TRANSMISSION

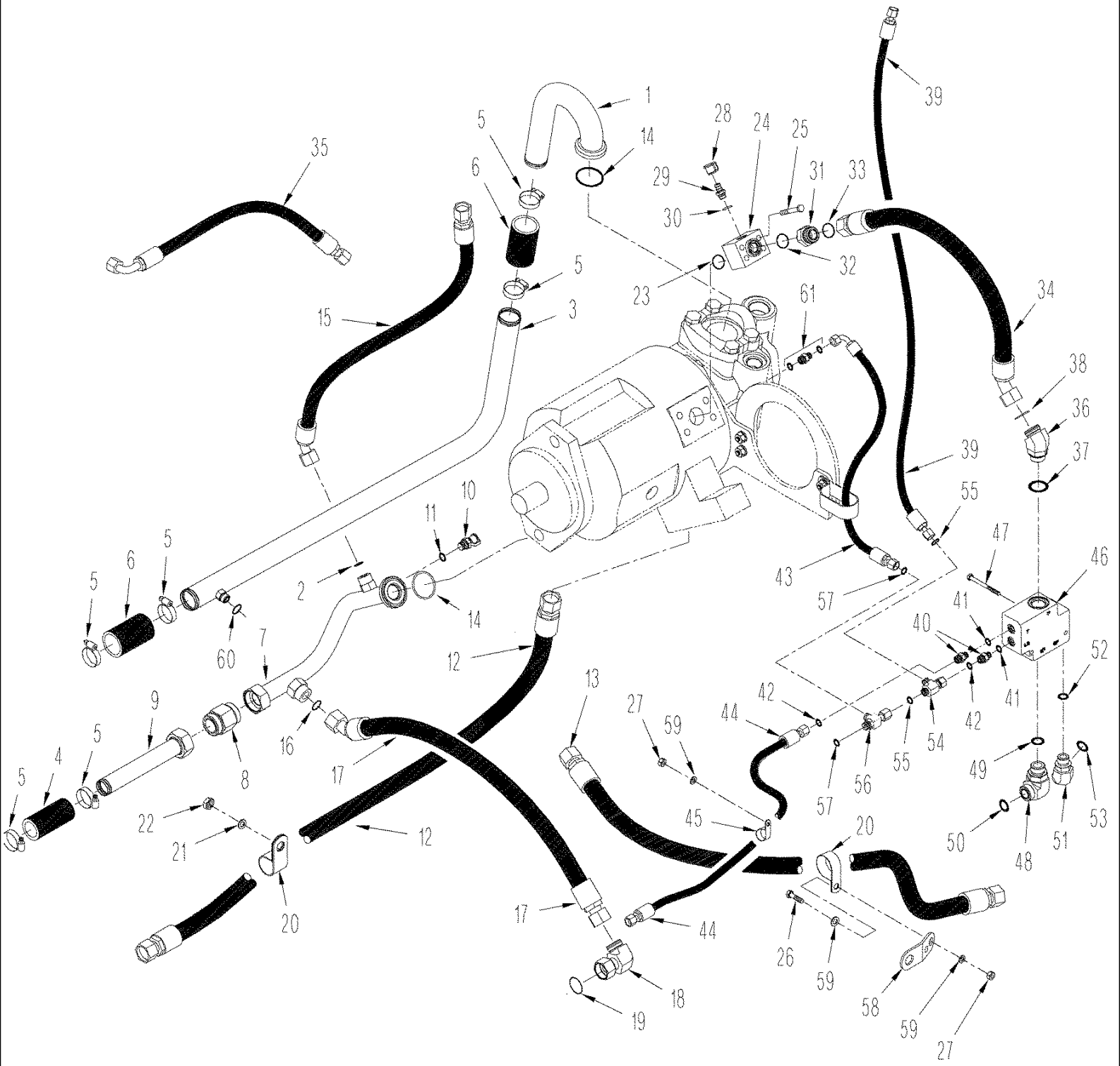

TJ375 TRACTOR - Hydraulic System

08 -28(1) STANDARD HYDRAULICS - PUMP LUBRICATION CIRCUIT, MANUAL SHIFT TRANSMISSION

ссылка	Номер детали	Кол-во	Описание
1	402484A2	1	TUBE ASSY.,
2	9991976	1	O-RING, -018, 90 Duro, .739" ID x .070" Thk,
3	401617A2	1	TUBE ASSY.,
4	435413A1	1	HOSE, 114 mm (4-1/2 in)
5	86624194	6	CLAMP, HOSE, #36, 1.81/2.75 Type F Worm, 1-13/16 - 2-3/4
6	435454A1	2	HOSE, 102 mm (4 in), Cut From : 443069A1
7	401613A4	1	TUBE ASSY.,
8	87411517	1	VALVE, CHECK, Check, 1-1/2
9	401615A3	1	TUBE ASSY.,
10	358968A1	1	COUPLING, M18 orb x 1,5, Diagnostic, Inc. 11
11	86639043	1	O-RING, 15.3 ID x 2.2
12	349499A1	1	HOSE ASSY., 1420 mm (56 in)
13	403538A1	1	HOSE ASSY., 1816 mm (71 in)
14	86637769	2	O-RING, -228, 90 Duro, 2.234" ID x .139" Thk,
15	315576A1	1	HOSE ASSY., 935 mm (37 in)
16	9824050	1	O-RING, -021, 90 Duro, .926" ID x .070" Thk,
17	335104A2	1	HOSE ASSY., 925 mm (36 in)
18	84989413	1	ELBOW, 90є, 1 7/16"-12 ORFS x 1 7/16"-12 Fem Sw, 90, 1-7/16 fc sl x swl, Inc. 19
19	9824050	1	O-RING, -021, 90 Duro, .926" ID x .070" Thk,
20	86639002	3	CLAMP, 1 3/8", Insul, 7/16" Bolt,
21	86624184	2	WASHER, M8 x 16 x 1.6, 9 x 17 x 1.6 mm
22	43235	1	BOLT, Hex, M8 x 30, 10.9, Cap, HH, CL 10.9, M8 x 1.25 x 30
23	9824051	1	O-RING, -025, 90 Duro, 1.176" ID x .070" Thk,
24	398274A2	1	BLOCK,
25	86637941	4	SCREW, Hex Soc Hd, 3/8"-16 x 2 3/4", Socket, 3/8 x 2-3/4; 8
26	9515003	2	BOLT, Hex, M10 x 30, 10.9, Full Thd,
27	86500689	3	NUT, M10, Cl 10, M10; 10
	178889A1	1	FITTING, Diagnostic, Inc. 28, 29
28	86502604	1	DUST CAP, Dust
29	NSS	1	NOT SERVICED SEPARATELY, Fitting, Diagnostic, Inc. 30
30	86639042	1	O-RING, Cl 6, 11.3MM ID x 2.2 Thk, 11.3 ID x 2.2
31	86639050	1	CONNECTOR, HYD., 1 7/16"-12 ORFS x M22 x 1.5 ORB, 1-7/16 fc sl x 22 Or, Inc. 32, 33
32	86639044	1	O-RING, Cl 6, 19.3MM ID x 2.2 Thk, 19.3 ID x 2.2 mm
33	9824050	1	O-RING, -021, 90 Duro, .926" ID x .070" Thk,
34	315577A2	1	HOSE ASSY., 800 mm (31 in)
35	327499A1	1	HOSE ASSY., 685 mm (27 in)
36	86639054	1	ELBOW, 45є, 1 7/16"-12 ORFS x M33 x 2 ORB, 45, 1-7/16 fc sl x 33 orb, Inc. 37, 38
37	86639046	1	O-RING, Cl 6, 29.6MM ID x 2.9 Thk, 29.6 ID x 2.9
38	9824050	1	O-RING, -021, 90 Duro, .926" ID x .070" Thk,
39	327459A1	1	HOSE ASSY., 1350 mm (53 in), BSN RVS001940
39	87415320	1	HOSE ASSY., 1350 mm (53-5/32 in), ASN RVS001940
40	86579671	2	CONNECTOR, HYD., 11/16"-16 ORFS x M14 x 1.5 ORB, 11/16 fc sl x 14 Or, Inc. 41, 42
41	86639042	1	O-RING, Cl 6, 11.3MM ID x 2.2 Thk, 11.3 ID x 2.2
43	315574A2	1	HOSE ASSY., 623 mm (24-1/2 in)
44	397244A1	1	HOSE ASSY., 1105 mm (43-1/2 in)

08 -28(1) STANDARD HYDRAULICS - PUMP LUBRICATION CIRCUIT, MANUAL SHIFT TRANSMISSION

ссылка	Номер детали	Кол-во	Описание
45	86594401	2	HUB, 5/8 ID
46	363294A1	1	VALVE, Priority, See Figure(s) : 08-31
47	86516395	2	BOLT, Hex, M8 x 90, 10.9, M8 x 90; 10.9
48	86580180	1	ELBOW, 90є, 1 7/16"-12 ORFS x M33 x 2 ORB, Includes 49, 50
49	86639046	1	O-RING, Cl 6, 29.6MM ID x 2.9 Thk, 29.6 ID x 2.9
50	9824050	1	O-RING, -021, 90 Duro, .926" ID x .070" Thk,
51	86639056	1	ELBOW, 45є, 13/16"-18 ORFS x M18 x 1.5 ORB, 45, M20 fc sl x 2,7 orb, Inc. 52, 53
52	86639045	1	O-RING, Cl 6, 23.6MM ID x 2.9 Thk, 23.6 ID x 2.9
53	9991976	1	O-RING, -018, 90 Duro, .739" ID x .070" Thk,
54	9843615	1	TEE, 11/16"-16 ORFS x 11/16"-16 Fem Sw Run, 11/16 fc sl x 11/16 sw, Inc. 55
56	300209A1	1	VALVE, Sequence, Shuttle
58	396278A1	1	BRACKET,
59	86624176	5	WASHER, M10 x 20 x 2, M10
60	9992298	1	O-RING, -014, 90 Duro, .489" ID x .070" Thk,
61	87400492	1	SCREEN, FILTER, With O-Rings
60	9992298	1	O-RING, -014, 90 Duro, .489" ID x .070" Thk,
42	9993141	1	O-RING, -012, 90 Duro, .364" ID x .070" Thk,
55	9993141	2	O-RING, -012, 90 Duro, .364" ID x .070" Thk,
57	9993141	2	O-RING, -012, 90 Duro, .364" ID x .070" Thk,

08 -28(2) STANDARD HYDRAULICS - PUMP LUBRICATION CIRCUIT, POWER SHIFT TRANSMISSION

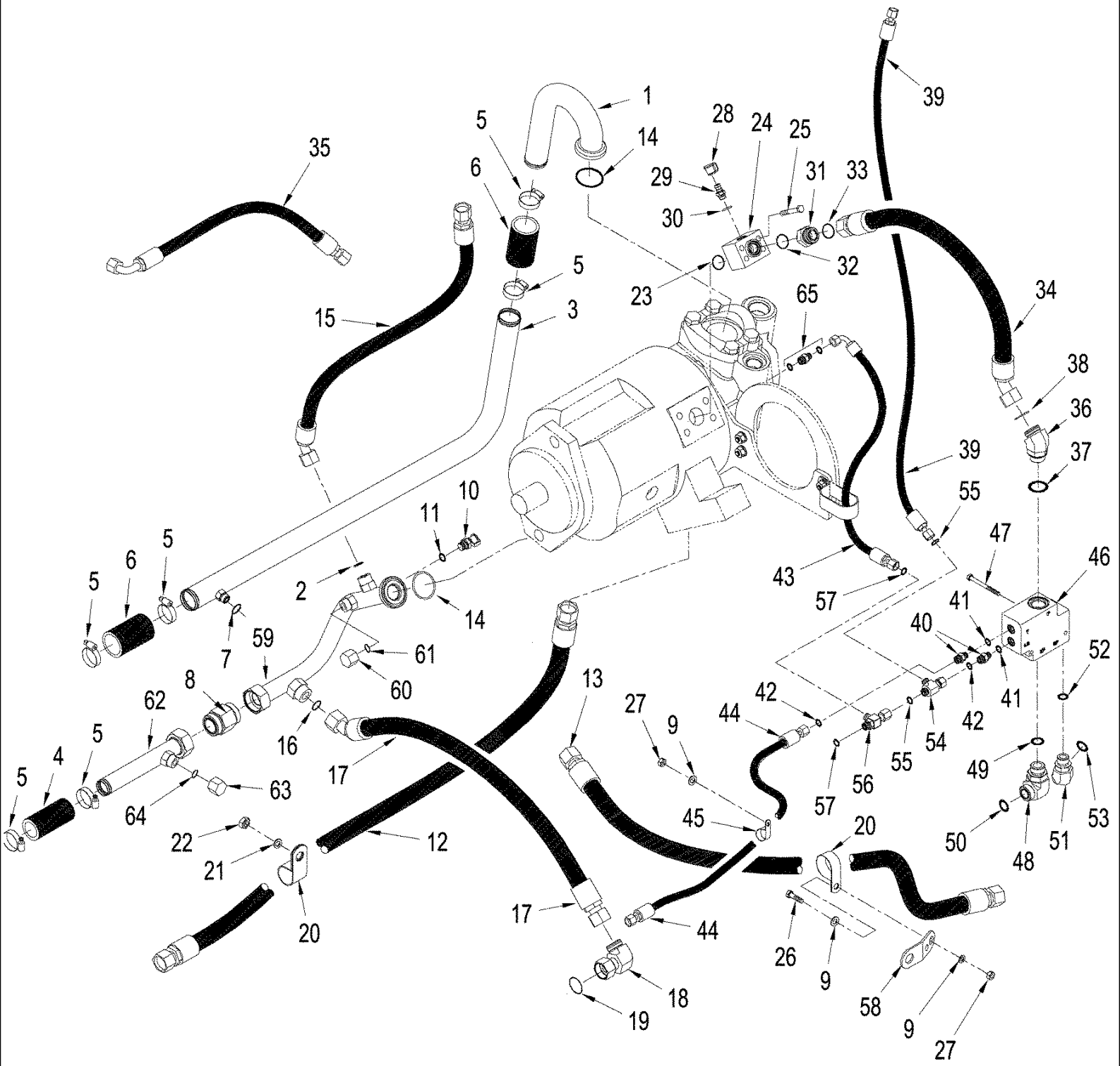

TJ375 TRACTOR - Hydraulic System

08 -28(2) STANDARD HYDRAULICS - PUMP LUBRICATION CIRCUIT, POWER SHIFT TRANSMISSION

ссылка	Номер детали	Кол-во	Описание
1	402484A2	1	TUBE ASSY.,
2	9991976	1	O-RING, -018, 90 Duro, .739" ID x .070" Thk,
3	419665A1	1	TUBE ASSY.,
4	435413A1	1	HOSE, 114 mm (4-1/2 in)
5	86624194	6	CLAMP, HOSE, #36, 1.81/2.75 Type F Worm, 1-13/16 - 2-3/4
6	435454A1	2	HOSE, 102 mm (4 in); Cut From : 443069A1
7	9992298	1	O-RING, -014, 90 Duro, .489" ID x .070" Thk,
8	87411517	1	VALVE, CHECK, 1-1/12"
9	86624176	3	WASHER, M10 x 20 x 2, M10
10	358968A1	1	COUPLING, M18 orb x 1.5, Diagnostic; Inc. 11
11	86639043	1	O-RING, 15.3 ID x 2.2
12	327466A1	1	HOSE, 1486 mm (58 in)
13	327461A1	1	HOSE ASSY., 1750 mm (69 in)
14	86637769	2	O-RING, -228, 90 Duro, 2.234" ID x .139" Thk,
15	315576A1	1	HOSE ASSY., 935 mm (37 in)
16	9824050	1	O-RING, -021, 90 Duro, .926" ID x .070" Thk,
17	335104A2	1	HOSE ASSY., 925 mm (36 in)
18	84989413	1	ELBOW, 90є, 1 7/16"-12 ORFS x 1 7/16"-12 Fem Sw, 90, 1-7/16 fc sl x swl; Inc. 19
19	9824050	1	O-RING, -021, 90 Duro, .926" ID x .070" Thk,
20	86639002	3	CLAMP, 1 3/8", Insul, 7/16" Bolt,
21	86624184	2	WASHER, M8 x 16 x 1.6, 9 x 17 x 1.6 mm
22	43234	2	BOLT, Hex, M8 x 25, 10.9, Cap, HH, CL 10.9, M8 x 1.25 x 25
23	9824051	1	O-RING, -025, 90 Duro, 1.176" ID x .070" Thk,
24	398274A2	1	BLOCK,
25	280188	4	BOLT, Hex, 3/8"-16 x 2 3/4", G8, 3/8 x 2-3/4; 8
26	9515003	2	BOLT, Hex, M10 x 30, 10.9, Full Thd,
27	86500689	3	NUT, M10, Cl 10, M10; 10
	178889A1	1	FITTING, Diagnostic, Inc. 28, 29
28	86502604	1	DUST CAP, Dust
29	NSS	1	NOT SERVICED SEPARATELY, Fitting, diagnostic, Inc. 30
30	86639042	1	O-RING, Cl 6, 11.3MM ID x 2.2 Thk, 11.3 IDx 2.2
31	86639050	1	CONNECTOR, HYD., 1 7/16"-12 ORFS x M22 x 1.5 ORB, 1-7/19 fc sl x 22 Or; Inc. 32, 33
32	86639044	1	O-RING, Cl 6, 19.3MM ID x 2.2 Thk, 19.3 ID x 2.2 mm
33	9824050	1	O-RING, -021, 90 Duro, .926" ID x .070" Thk,
34	315577A2	1	HOSE ASSY., 800 mm (31 in)
35	395875A1	1	HOSE ASSY., 775 mm (30-1/2 in)
36	86639054	1	ELBOW, 45є, 1 7/16"-12 ORFS x M33 x 2 ORB, 45,1-7/16 fc sl x 33 orb; Inc. 37, 38
37	86639046	1	O-RING, Cl 6, 29.6MM ID x 2.9 Thk, 29.6 ID x 2.9
38	9824050	1	O-RING, -021, 90 Duro, .926" ID x .070" Thk,
39	327459A1	1	HOSE ASSY., 1350 mm (53-5/32 in), BSN RVS001940
39	87415320	1	HOSE ASSY., 1350 mm (53-5/32 in), ASN RVS001940
40	86579671	2	CONNECTOR, HYD., 11/16"-16 ORFS x M14 x 1.5 ORB, 11/16 fc sl x 14 Or; Inc. 41, 42
41	86639042	1	O-RING, Cl 6, 11.3MM ID x 2.2 Thk, 11.3 ID x 2.2
43	315574A2	1	HOSE ASSY., 623 mm (24-1/2 in)
44	397244A1	1	HOSE ASSY., 1105 mm (43-1/2 in)

08 -28(2) STANDARD HYDRAULICS - PUMP LUBRICATION CIRCUIT, POWER SHIFT TRANSMISSION

ссылка	Номер детали	Кол-во	Описание
45	86594406	2	CLAMP, 5/8", Insul, 3/8" Bolt, 5/8 ID
46	363294A1	1	VALVE, Priority, See Figure(s) : 08-31
47	86516395	2	BOLT, Hex, M8 x 90, 10.9, M8-90; 10.9
48	86580180	1	ELBOW, 90є, 1 7/16"-12 ORFS x M33 x 2 ORB, Includes 49, 50
49	86639046	1	O-RING, Cl 6, 29.6MM ID x 2.9 Thk, 29.6 ID x 2.9
50	9824050	1	O-RING, -021, 90 Duro, .926" ID x .070" Thk,
51	86639056	1	ELBOW, 45є, 13/16"-18 ORFS x M18 x 1.5 ORB, 45, M20 fc sl x 2.7 orb; Inc. 52, 53
52	86639045	1	O-RING, Cl 6, 23.6MM ID x 2.9 Thk, 23.6 ID x 2.9
53	9991976	1	O-RING, -018, 90 Duro, .739" ID x .070" Thk,
54	9843615	1	TEE, 11/16"-16 ORFS x 11/16"-16 Fem Sw Run, 11/16 fc sl x 11/16 sw; Inc. 55
56	300209A1	1	VALVE, Sequence, Shuttle
58	406576A1	1	BRACKET,
59	419668A2	1	TUBE, Inc. 60, 61
60	E9NNP864AA	1	PLUG, M10 fcsl
62	419671A2	1	TUBE ASSY.,
63	9840576	1	CAP, 1"-14 ORFS,
64	9992069	1	O-RING, -016, 90 Duro, .614" ID x .070" Thk,
65	87400492	1	SCREEN, FILTER, With O-Rings
42	9993141	1	O-RING, -012, 90 Duro, .364" ID x .070" Thk,
55	9993141	2	O-RING, -012, 90 Duro, .364" ID x .070" Thk,
57	9993141	2	O-RING, -012, 90 Duro, .364" ID x .070" Thk,
61	9993141	1	O-RING, -012, 90 Duro, .364" ID x .070" Thk,

08 -29 STANDARD HYDRAULICS - PUMP MOUNTING

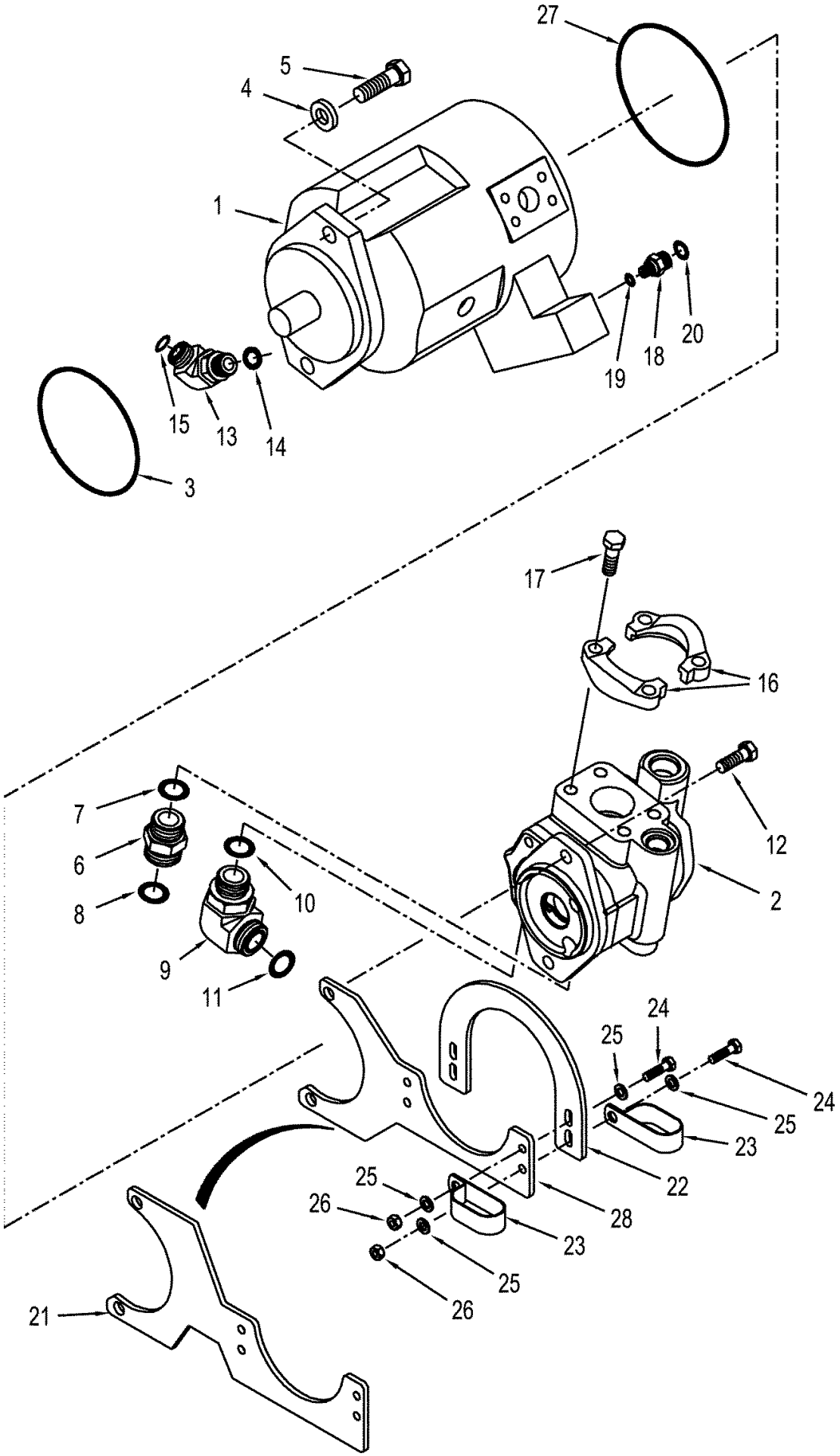

TJ375 TRACTOR - Hydraulic System

08 -29 STANDARD HYDRAULICS - PUMP MOUNTING

ссылка	Номер детали	Кол-во	Описание
1	278872A2	1	PUMP, 71 cc, Piston, See Figure(s) : 08-30
2	87427941	1	PUMP, HYDRAULIC, 100 cc, Gear, See Figure(s) : 08-35
3	510828	1	O-RING, -250, 70 Duro, 4.984" ID x .139" Thk, 5 ID x 1/8 Thk; 5
4	86637949	2	WASHER, 17/32" x 1 1/8" x .060", 11/16 x 1-1/4 x 1/4 in
5	412398	2	BOLT, Hex, M16 x 50, 10.9,
6	9824055	1	CONNECTOR, HYD., 1-7/16 fc x 1-5/16 Or, Inc. 7, 8
7	167268	1	O-RING, 16-1, 90 Duro, 1.171" ID x .116" Thk,
8	9824050	1	O-RING, -021, 90 Duro, .926" ID x .070" Thk,
9	201-308	1	ELBOW, 90є, 1 7/16"-12 x 1 5/8"-12, Adj, ORFS, 90, 1-7/16 fc x 1-5/16 Or, Inc. 10, 11
10	167268	1	O-RING, 16-1, 90 Duro, 1.171" ID x .116" Thk,
11	9824050	1	O-RING, -021, 90 Duro, .926" ID x .070" Thk,
12	9824642	2	BOLT, Hex, M12 x 35, 10.9,
13	86505941	1	ELBOW, Inc. 14, 15
14	167269	1	O-RING, 10-1, 90 Duro, .755" ID x .097" Thk,
15	9992069	1	O-RING, -016, 90 Duro, .614" ID x .070" Thk,
16	A14141	4	FLANGE,
17	88904	8	BOLT, Hex, 1/2"-13 x 1 1/2", G8, Full Thd, Cap, HH, G8, 1/2"-13 x 1-1/2"
18	87400492	1	SCREEN, FILTER, Inc. 19, 20
19	165202	1	O-RING, 4-1, 90 Duro, .351" ID x .072" Thk,
21	418325A1	1	BRACKET, Mounting, Manual Shift Transmission, BSN RVS001940
20	9993141	1	O-RING, -012, 90 Duro, .364" ID x .070" Thk,
21	87419158	1	BRACKET, Mounting, Manual Shift Transmission, ASN RVS001940
22	435539A1	1	SHIELD, , BSN RVS001940
22	87419159	1	PLATE, , ASN RVS001940
23	L111928	2	CLAMP,
24	43235	4	BOLT, Hex, M8 x 30, 10.9, Cap, HH, CL 10.9, M8 x 1.25 x 30
25	86624184	8	WASHER, M8 x 16 x 1.6, 9 x 17 x 1.6 mm
26	86528579	4	NUT, LOCK, M8 x 1.25, Cl 10,
27	436514A1	1	O-RING,
28	339186A1	1	BRACKET, Mounting, Power Shift Transmission, BSN RVS001840
28	87419460	1	BRACKET, Mounting, Power Shift Transmission, ASN RVS001940

08 -30 PISTON PUMP ASSY - STANDARD HYDRAULICS

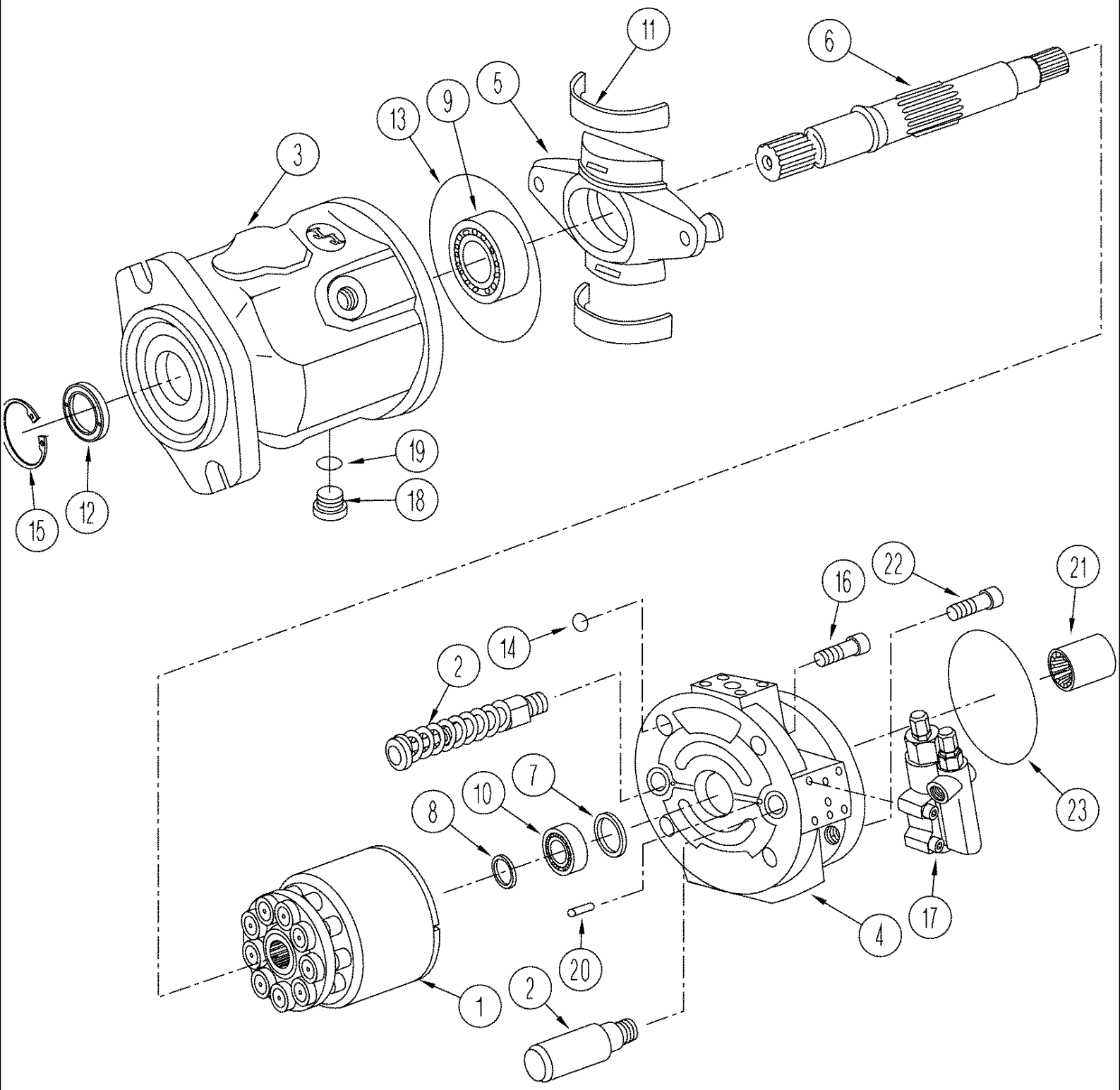

08 -30 PISTON PUMP ASSY - STANDARD HYDRAULICS

ссылка	Номер детали	Кол-во	Описание
	278872A2	1	PUMP, 71 cc, Inc. 1 - 24
1	NSS	1	NOT SERVICED SEPARATELY, Cylinder Assy
2	NSS	1	NOT SERVICED SEPARATELY, Piston Assy, Control
3	NSS	1	NOT SERVICED SEPARATELY, Housing
4	NSS	1	NOT SERVICED SEPARATELY, Block
5	NSS	1	NOT SERVICED SEPARATELY, Plate, Swash
6	NSS	1	NOT SERVICED SEPARATELY, Shaft
7	NSS	1	NOT SERVICED SEPARATELY, Washer
8	NSS	1	NOT SERVICED SEPARATELY, Spacer
9	NSS	1	NOT SERVICED SEPARATELY, Bearing, Roller
10	NSS	1	NOT SERVICED SEPARATELY, Bearing, Roller
11	NSS	2	NOT SERVICED SEPARATELY, Support
12	NSS	1	NOT SERVICED SEPARATELY, Seal
13	NSS	1	NOT SERVICED SEPARATELY, O-Ring
14	NSS	4	NOT SERVICED SEPARATELY, O-Ring
15	NSS	1	NOT SERVICED SEPARATELY, Ring, Snap
16	NSS	4	NOT SERVICED SEPARATELY, Screw
17	352875A2	1	VALVE, CONTROL,
18	NSS	1	NOT SERVICED SEPARATELY, Plug
19	NSS	1	NOT SERVICED SEPARATELY, O-Ring
20	NSS	1	NOT SERVICED SEPARATELY, Pin
21	NSS	1	NOT SERVICED SEPARATELY, Coupling
22	NSS	2	NOT SERVICED SEPARATELY, Screw
23	436514A1	1	O-RING,
	388293A1	1	KIT, SEALS, Seals, Inc. 12 - 14, 19, 23

08 -31 STANDARD HYDRAULICS - PRIORITY VALVE ASSY

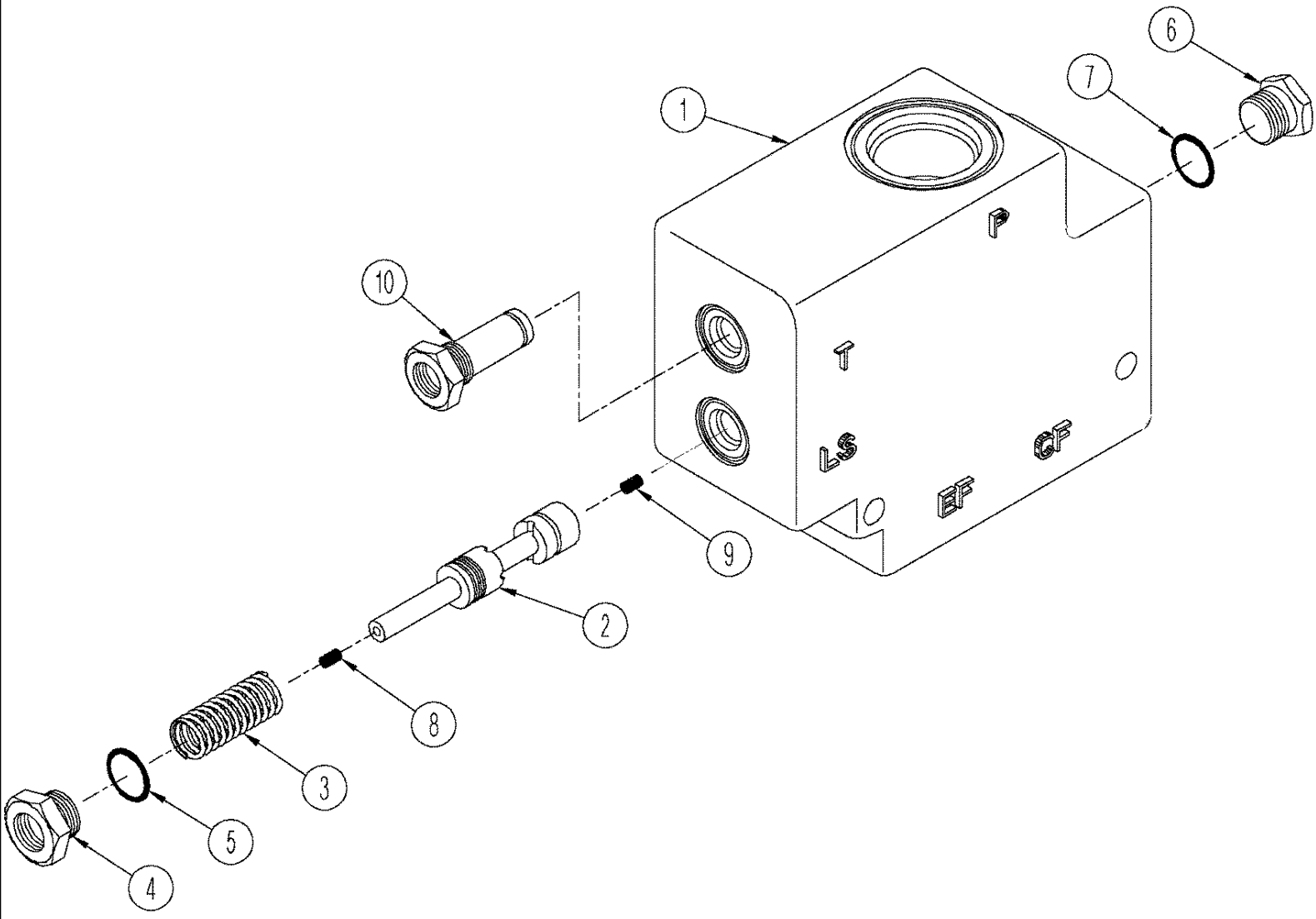

TJ375 TRACTOR - Hydraulic System

08 -31 STANDARD HYDRAULICS - PRIORITY VALVE ASSY

ссылка	Номер детали	Кол-во	Описание
	363294A1	1	VALVE, Priority, Inc. 1 - 10
1	NSS	1	NOT SERVICED SEPARATELY, Housing
2	NSS	1	NOT SERVICED SEPARATELY, Spool
3	D82777	1	SPRING,
4	NSS	1	NOT SERVICED SEPARATELY, Plug
5	167269	1	O-RING, 10-1, 90 Duro, .755" ID x .097" Thk,
6	NSS	1	NOT SERVICED SEPARATELY, Plug
7	NSS	1	NOT SERVICED SEPARATELY, O-Ring
8	NSS	1	NOT SERVICED SEPARATELY, Orifice
9	NSS	1	NOT SERVICED SEPARATELY, Orifice
10	370152A1	1	VALVE, Relief

08 -32 HIGH OUTPUT HYDRAULICS - PUMP LUBRICATION CIRCUIT, BSN RVS003801

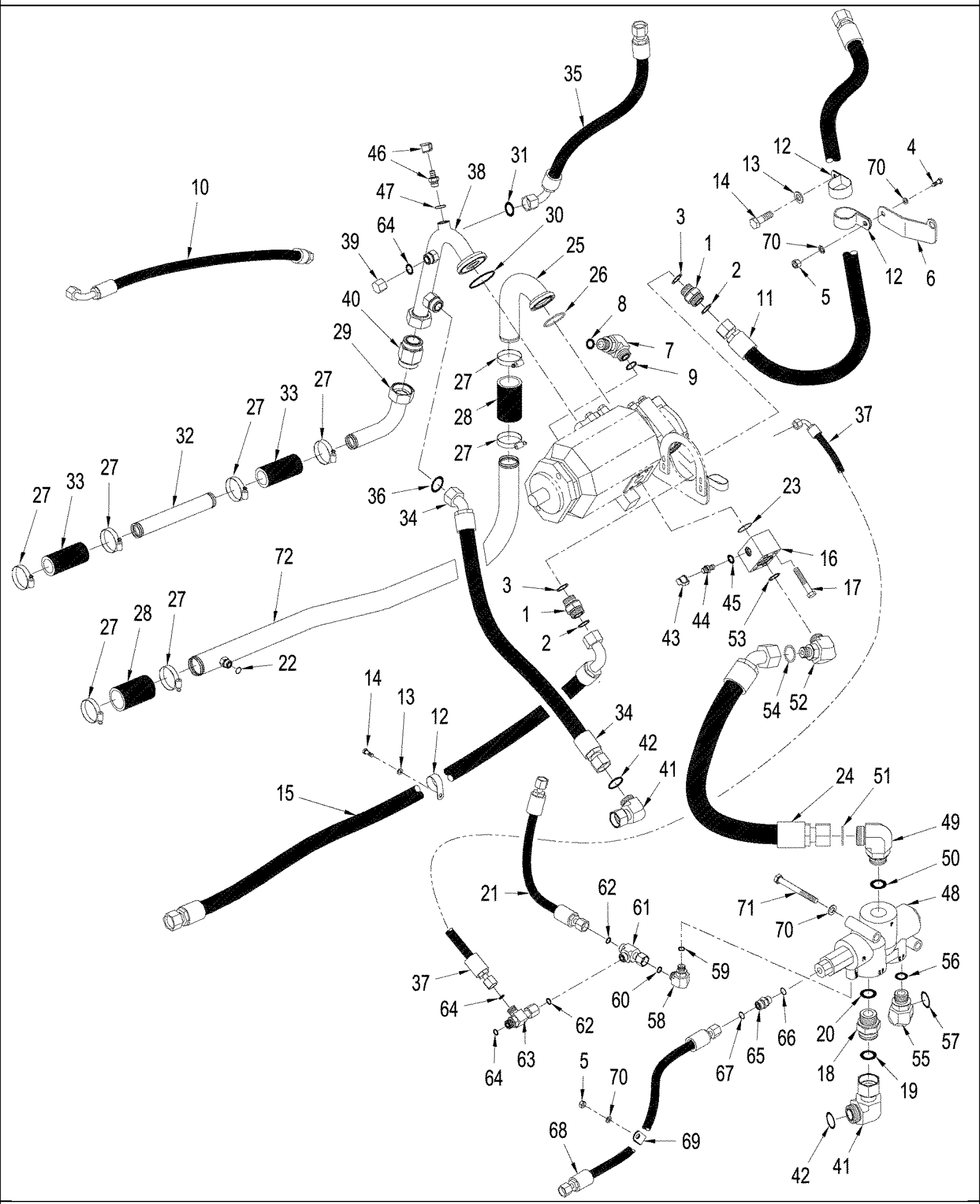

TJ375 TRACTOR - Hydraulic System

08 -32 HIGH OUTPUT HYDRAULICS - PUMP LUBRICATION CIRCUIT, BSN RVS003801

ссылка	Номер детали	Кол-во	Описание
1	9824055	2	CONNECTOR, HYD., 1-7/16 fc x 1-5/16 Or, Inc. 2, 3
2	9824050	2	O-RING, -021, 90 Duro, .926" ID x .070" Thk,
3	167268	2	O-RING, 16-1, 90 Duro, 1.171" ID x .116" Thk,
4	9515003	1	BOLT, Hex, M10 x 30, 10.9, Full Thd,
5	86500689	2	NUT, M10, Cl 10, M10; 10.9
6	406576A1	1	BRACKET,
7	86637669	1	ELBOW, 90є, 1"-14 x 1 1/16"-12, Adj, ORFS, 90, 1 fc sl x 1-1/16 orb, Inc. 8, 9
8	9992069	1	O-RING, -016, 90 Duro, .614" ID x .070" Thk,
9	167266	1	O-RING, 12-1, 90 Duro, .924 ID x .116" Thk,
10	327499A1	1	HOSE ASSY., 685 mm (27 in), Manual Shift Transmission
10	363769A1	1	HOSE ASSY., 700 mm (27-1/2 in), Power Shift Transmission
11	412088A1	1	HOSE ASSY., 1663 mm (65 in), Manual Shift Transmission
11	358860A1	1	HOSE ASSY., 1625 mm (64 in), Power Shift Transmission
12	86639002	3	CLAMP, 1 3/8", Insul, 7/16" Bolt, 1-3/8 ID
13	86624184	2	WASHER, M8 x 16 x 1.6, 9 x 17 x 1.6 mm
14	43234	2	BOLT, Hex, M8 x 25, 10.9, Cap, HH, CL 10.9, M8 x 1.25 x 25
15	412086A1	1	HOSE ASSY., 1435 mm (56 in), Manual Shift Transmission
15	335103A1	1	HOSE ASSY., 1525 mm (60 in), Power Shift Transmission
16	86992232	1	BLOCK,
17	86637942	4	SCREW, Hex Soc Hd, 1/2"-13 x 2 1/2", 1/2 x 2-1/2; 8
18	86580179	1	CONNECTOR, HYD., 1 7/16"-12 ORFS x M22 x 2 ORB, Inccludes 19, 20
19	9824050	1	O-RING, -021, 90 Duro, .926" ID x .070" Thk,
20	86639046	1	O-RING, Cl 6, 29.6MM ID x 2.9 Thk, 29.6 ID x 2.9
21	383586A1	1	HOSE ASSY., 1416 mm (56 in), to Steering Control Unit / Load Sense
22	9992298	1	O-RING, -014, 90 Duro, .489" ID x .070" Thk,
23	9840589	1	O-RING, -029, 90 Duro, 1.489" ID x .070" Thk, 90 Duro, 1.489" ID x .070" Thk
24	447177A1	1	HOSE ASSY., 622 mm (24-1/2 in), Manual Shift Transmission, NOTE: If Hose 412087A1 is Needed Ordered 447177A1 Hose 622 mm (24-1/2 in) and Elbow 86580180.
24	446059A1	1	HOSE ASSY., 568mm (22-3/8 in), NOTE: If Hose 383351A1 675 mm (26-1/2 in) is Needed Order 446059A1 Hose 568 mm (22-3/4 in) and Elbow 86580180, Power Shift Transmission
25	405572A1	1	TUBE ASSY.,
26	86637769	1	O-RING, -228, 90 Duro, 2.234" ID x .139" Thk,
27	86624194	8	CLAMP, HOSE, #36, 1.81/2.75 Type F Worm, 1-13/16 - 2-3/4
28	435454A1	2	HOSE, 102 mm (4 in), Cut From : 443069A1
29	405578A1	1	TUBE ASSY.,
29	413812A1	1	TUBE, , Power Shift Transmission
30	511284	1	O-RING, -232, 70 Duro, 2.734" ID x .139" Thk,
31	9991976	1	O-RING, -018, 90 Duro, .739" ID x .070" Thk,
32	405713A2	1	TUBE ASSY., , Manual Shift Transmission
32	413816A2	1	TUBE, , Power Shift Transmission
33	435413A1	2	HOSE, 114 mm (4-1/2 in), Cut From : 443067A1
34	335104A2	1	HOSE ASSY., 925 mm (36 in)
35	412085A1	1	HOSE ASSY., 826 mm (32-1/2 in)), Manual Shift Transmission
35	301409A1	1	HOSE ASSY., 885 mm (35 in), Power Shift Transmission
36	9824050	1	O-RING, -021, 90 Duro, .926" ID x .070" Thk,

TJ375 TRACTOR - Hydraulic System

08 -32 HIGH OUTPUT HYDRAULICS - PUMP LUBRICATION CIRCUIT, BSN RVS003801

ссылка	Номер детали	Кол-во	Описание
37	327471A1	1	HOSE, 724 mm (28 in), to Compensator
38	405576A3	1	TUBE ASSY., , Manual Shift Transmission
38	413810A3	1	TUBE ASSY., , Power Shift Transmission
39	9625546	1	CAP, 11/16"-16 ORFS,
40	87411517	1	VALVE, CHECK, 1-1/2"
41	84989413	2	ELBOW, 90є, 1 7/16"-12 ORFS x 1 7/16"-12 Fem Sw, 90, 1-7/16 fc sl x swl, Inc. 42
42	9824051	2	O-RING, -025, 90 Duro, 1.176" ID x .070" Thk,
	178889A1	1	FITTING, Diagnostic, Inc. 43 - 44
43	86502604	1	DUST CAP,
44	NSS	1	NOT SERVICED SEPARATELY, Fitting, Diagnostic, Inc. 45
45	86639042	1	O-RING, Cl 6, 11.3MM ID x 2.2 Thk, 11.3 ID x 2.2
46	358968A1	1	COUPLING, M18 orb x 1,5, Diagnostic, Inc. 47
47	86639043	1	O-RING, 15.3 ID x 2.2
48	337481A1	1	VALVE, Priority, See Figure (s) : 08-36
49	86580180	1	ELBOW, 90є, 1 7/16"-12 ORFS x M33 x 2 ORB, Includes 50, 51
50	86639046	1	O-RING, Cl 6, 29.6MM ID x 2.9 Thk, 29.6 ID x 2.9
51	9824050	1	O-RING, -021, 90 Duro, .926" ID x .070" Thk,
52	86580180	1	ELBOW, 90є, 1 7/16"-12 ORFS x M33 x 2 ORB, Includes 53, 54
53	86639046	1	O-RING, Cl 6, 29.6MM ID x 2.9 Thk, 29.6 ID x 2.9
54	9824050	1	O-RING, -021, 90 Duro, .926" ID x .070" Thk,
55	86639056	1	ELBOW, 45є, 13/16"-18 ORFS x M18 x 1.5 ORB, M20 fc sl x 2,7 orb, Inc. 56, 57
56	86639045	1	O-RING, Cl 6, 23.6MM ID x 2.9 Thk, 23.6 ID x 2.9
57	9991976	1	O-RING, -018, 90 Duro, .739" ID x .070" Thk,
58	86579686	1	ELBOW, 90є, 11/16"-18 ORFS x M14 x 1.5 ORB, 11/16 fc sl x 14 Or, Inc. 59, 60
59	86639042	1	O-RING, Cl 6, 11.3MM ID x 2.2 Thk, 11.3 ID x 2.2
61	9843615	1	TEE, 11/16"-16 ORFS x 11/16"-16 Fem Sw Run, 11/16 fc sl x 11/16 sw, Inc. 62
63	300209A1	1	VALVE, Sequence, Shuttle
65	86579671	1	CONNECTOR, HYD., 11/16"-16 ORFS x M14 x 1.5 ORB, 11/16 fc sl x 14 Or, Inc. 66, 67
66	86639042	1	O-RING, Cl 6, 11.3MM ID x 2.2 Thk, 11.3 ID x 2.2
68	397244A1	1	HOSE ASSY., 1105 mm (43-1/2 in)
69	86594406	2	CLAMP, 5/8", Insul, 3/8" Bolt, 5/8 ID
70	86624176	2	WASHER, M10 x 20 x 2, M10
71	43253	2	BOLT, Hex, M10 x 100, 10.9,
72	405574A1	1	TUBE ASSY., , Manual Shift Transmission
72	413814A1	1	TUBE ASSY., , Power Shift Transmission
60	9993141	1	O-RING, -012, 90 Duro, .364" ID x .070" Thk,
62	9993141	2	O-RING, -012, 90 Duro, .364" ID x .070" Thk,
64	9993141	2	O-RING, -012, 90 Duro, .364" ID x .070" Thk,
67	9993141	1	O-RING, -012, 90 Duro, .364" ID x .070" Thk,

TJ375 TRACTOR - Hydraulic System

08 -32(01) HIGH OUTPUT HYDRAULICS - PUMP LUBRICATION CIRCUIT, ASN RVS003801

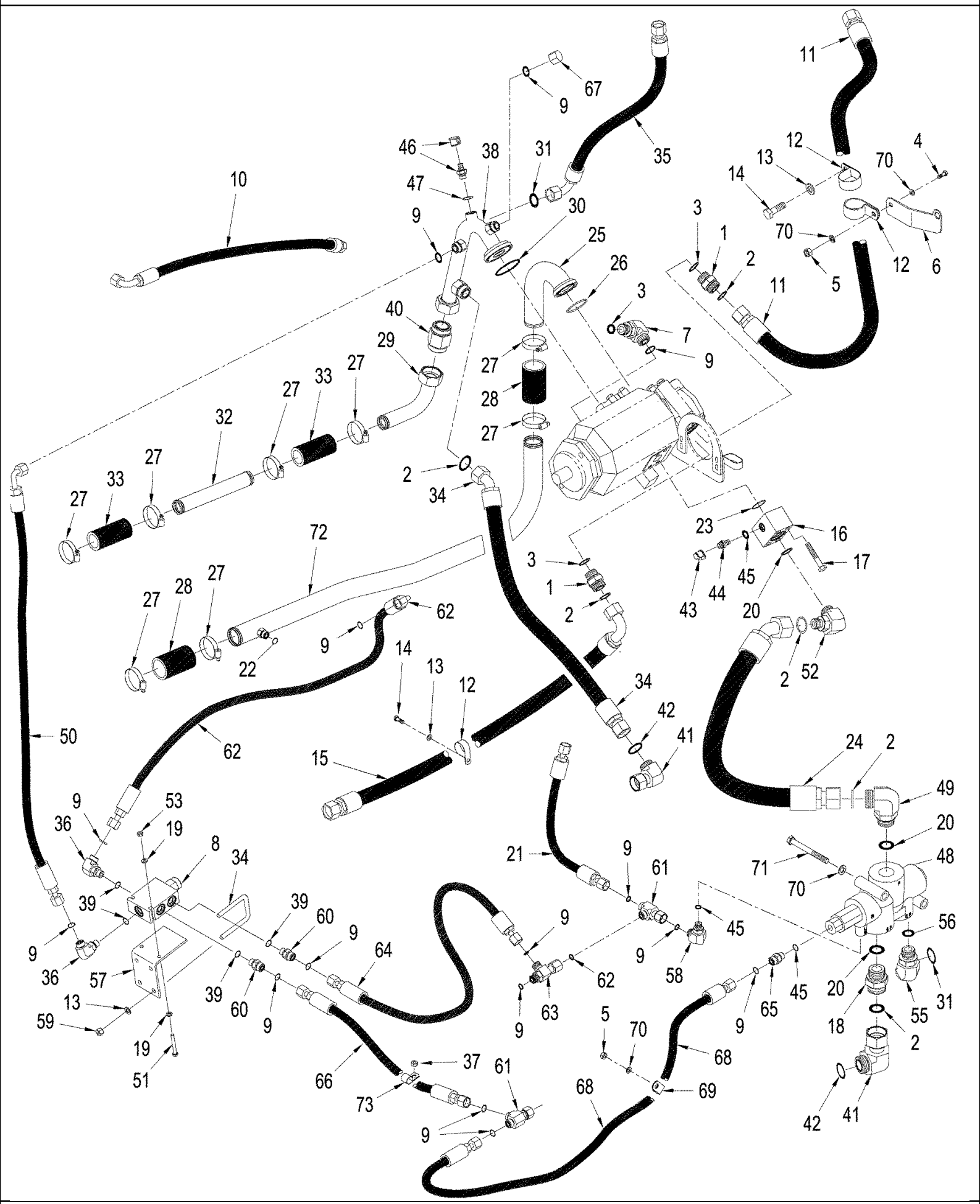

TJ375 TRACTOR - Hydraulic System

08 -32(01) HIGH OUTPUT HYDRAULICS - PUMP LUBRICATION CIRCUIT, ASN RVS003801

ссылка	Номер детали	Кол-во	Описание
1	9824055	2	CONNECTOR, HYD., 1-7/16 fc x 1-5/16 Or, Inc. 2, 3
2	9824050	6	O-RING, -021, 90 Duro, .926" ID x .070" Thk,
3	167268	3	O-RING, 16-1, 90 Duro, 1.171" ID x .116" Thk,
4	9515003	1	BOLT, Hex, M10 x 30, 10.9, Full Thd,
5	86500689	2	NUT, M10, Cl 10, M10; 10.9
6	406576A1	1	BRACKET,
7	86637669	1	ELBOW, 90є, 1"-14 x 1 1/16"-12, Adj, ORFS, 90, 1 fc sl x 1-1/16 orb, Inc. 3, 9
8	87431772	1	VALVE, PILOT, Destroke Pump
9	167266	11	O-RING, 12-1, 90 Duro, .924 ID x .116" Thk,
10	327499A1	1	HOSE ASSY., 685 mm (27 in), Manual Shift Transmission
10	363769A1	1	HOSE ASSY., 700 mm (27-1/2 in), Power Shift Transmission
11	412088A1	1	HOSE ASSY., 1663 mm (65 in), to Right Front Filter, Manual Shift Transmission
11	358860A1	1	HOSE ASSY., 1625 mm (64 in)to Right Front Filter, Power Shift Transmission
12	86639002	3	CLAMP, 1 3/8", Insul, 7/16" Bolt, 1-3/8 ID
13	86624184	6	WASHER, M8 x 16 x 1.6, 9 x 17 x 1.6 mm
14	43234	2	BOLT, Hex, M8 x 25, 10.9, Cap, HH, CL 10.9, M8 x 1.25 x 25
15	412086A1	1	HOSE ASSY., 1435 mm (56 in), Charge Pump to Charge Tube, Manual Shift Transmission
15	335103A1	1	HOSE ASSY., 1525 mm (60 in), Charge Pump to Charge Tube, Power Shift Transmission
16	86992232	1	BLOCK,
17	86637942	4	SCREW, Hex Soc Hd, 1/2"-13 x 2 1/2", 1/2 x 2-1/2; 8
18	86580179	1	CONNECTOR, HYD., 1 7/16"-12 ORFS x M22 x 2 ORB, Includes 2, 20
19	86624181	4	WASHER, M6, 6.6 x 12 x 1.6 mm
20	86639046	3	O-RING, Cl 6, 29.6MM ID x 2.9 Thk, 29.6 ID x 2.9
21	383586A1	1	HOSE ASSY., 1416 mm (56 in), to Steering Control Unit / Load Sense
22	9992298	1	O-RING, -014, 90 Duro, .489" ID x .070" Thk,
23	9840589	1	O-RING, -029, 90 Duro, 1.489" ID x .070" Thk, 90 Duro, 1.489" ID x .070" Thk
24	447177A1	1	HOSE ASSY., 622 mm (24-1/2 in), Manual Shift Transmission, NOTE: If Hose 412087A1 is Needed Ordered 447177A1 Hose 622 mm (24-1/2 in) and Elbow 86580180.
24	446059A1	1	HOSE ASSY., 568mm (22-3/8 in), NOTE: If Hose 383351A1 675 mm (26-1/2 in) is Needed Order 446059A1 Hose 568 mm (22-3/4 in) and Elbow 86580180, Power Shift Transmission
25	405572A1	1	TUBE ASSY.,
26	86637769	1	O-RING, -228, 90 Duro, 2.234" ID x .139" Thk,
27	86624194	8	CLAMP, HOSE, #36, 1.81/2.75 Type F Worm, 1-13/16 - 2-3/4
28	435454A1	2	HOSE, 102 mm (4 in), Cut From : 443069A1
29	405578A1	1	TUBE ASSY.,
29	413812A1	1	TUBE, , Power Shift Transmission
30	511284	1	O-RING, -232, 70 Duro, 2.734" ID x .139" Thk,
31	9991976	2	O-RING, -018, 90 Duro, .739" ID x .070" Thk,
32	405713A2	1	TUBE ASSY., , Manual Shift Transmission
32	413816A2	1	TUBE, , Power Shift Transmission
33	435413A1	2	HOSE, 114 mm (4-1/2 in), Cut From : 443067A1
34	335104A2	1	HOSE ASSY., 925 mm (36 in)
35	412085A1	1	HOSE ASSY., 826 mm (32-1/2 in)), Manual Shift Transmission
35	301409A1	1	HOSE ASSY., 885 mm (35 in), Piston Pump Supply, from Steer Return Port, Power Shift Transmission
36	9840543	2	ELBOW, 90є, 11/16"-16 x 9/16"-18 Adj, ORFS, 90, 9/16" or x 11/16" fc sl, Inc. 9 & 39

08 -32(01) HIGH OUTPUT HYDRAULICS - PUMP LUBRICATION CIRCUIT, ASN RVS003801

ссылка	Номер детали	Кол-во	Описание
37	86500688	2	NUT, M6, Cl 10,
38	405576A3	1	TUBE ASSY., Piston Pump Supply, Inc. 9 & 67, Manual Shift Transmission
38	87303782	1	TUBE ASSY., Piston Pump Supply, Inc. 9 & 67, Power Shift Transmission
39	9617873	2	O-RING, 6-1, 90 Duro, .468" ID x .078" Thk,
40	87545498	1	VALVE, CHECK, 1-1/2", 50 psi
41	84989413	2	ELBOW, 90є, 1 7/16"-12 ORFS x 1 7/16"-12 Fem Sw, 90, 1-7/16 fc sl x swl, Inc. 42
42	9824051	2	O-RING, -025, 90 Duro, 1.176" ID x .070" Thk,
	178889A1	1	FITTING, Diagnostic, Inc. 43 - 44
43	86502604	1	DUST CAP,
44	NSS	1	NOT SERVICED SEPARATELY, Fitting, Diagnostic, Inc. 45
45	86639042	3	O-RING, Cl 6, 11.3MM ID x 2.2 Thk, 11.3 ID x 2.2
46	358968A1	1	COUPLING, M18 orb x 1,5, Diagnostic, Inc. 47
47	86639043	1	O-RING, 15.3 ID x 2.2
48	337481A1	1	VALVE, Priority, See Figure (s) : 08-36
49	86580180	1	ELBOW, 90є, 1 7/16"-12 ORFS x M33 x 2 ORB, Includes 2 & 20
50	87441927	1	HOSE ASSY., 622 mm (24-1/2 in)
51	86556136	2	BOLT, Hex, M6 x 50, 10.9, M6 x 59, CL10.9
52	86580180	1	ELBOW, 90є, 1 7/16"-12 ORFS x M33 x 2 ORB, Includes 2 & 20
53	86500688	2	NUT, M6, Cl 10,
54	396490A1	2	U-BOLT, M8
55	86639056	1	ELBOW, 45є, 13/16"-18 ORFS x M18 x 1.5 ORB, M20 fc sl x 2,7 orb, Inc. 56 & 31
56	86639045	1	O-RING, Cl 6, 23.6MM ID x 2.9 Thk, 23.6 ID x 2.9
57	87434200	1	BRACKET,
58	86579686	1	ELBOW, 90є, 11/16"-18 ORFS x M14 x 1.5 ORB, 11/16 fc sl x 14 Or, Inc. 9 & 45
59	412250	4	NUT, LOCK, M8 x 1.25, Cl 8,
60	9993143	2	CONNECTOR, HYD., 11/16"-16 ORFS x 9/16"-18 ORB, 9/16" or x 11/16" fc sl, Inc. 9, 39
61	9843615	2	TEE, 11/16"-16 ORFS x 11/16"-16 Fem Sw Run, 11/16 fc sl x 11/16 sw, Inc. 9
62	87434311	1	HOSE ASSY., 535 mm (21-1/16 in), Destroke Outlet to Piston Pump Compenstator
63	300209A1	1	VALVE, Sequence, Shuttle
64	87304198	1	HOSE ASSY., 610 mm (24 in), to Destroke Valve Sense Port
65	86579671	1	CONNECTOR, HYD., 11/16"-16 ORFS x M14 x 1.5 ORB, 11/16 fc sl x 14 Or, Inc. 9 & 45
66	87303880	1	HOSE ASSY., 508 mm (20 in), to Destroke Valve Drain Port
67	9625546	1	CAP, 11/16"-16 ORFS,
68	87304199	1	HOSE ASSY., 812 mm (32 in), Tank Return
69	86594406	2	CLAMP, 5/8", Insul, 3/8" Bolt, 5/8 ID
70	86624176	2	WASHER, M10 x 20 x 2, M10
71	43253	2	BOLT, Hex, M10 x 100, 10.9,
72	405574A1	1	TUBE ASSY., , Manual Shift Transmission
72	413814A1	1	TUBE ASSY., , Power Shift Transmission
73	86050268	2	CLIP,

TJ375 TRACTOR - Hydraulic System

08 -33 HIGH OUTPUT HYDRAULICS - PUMP MOUNTING

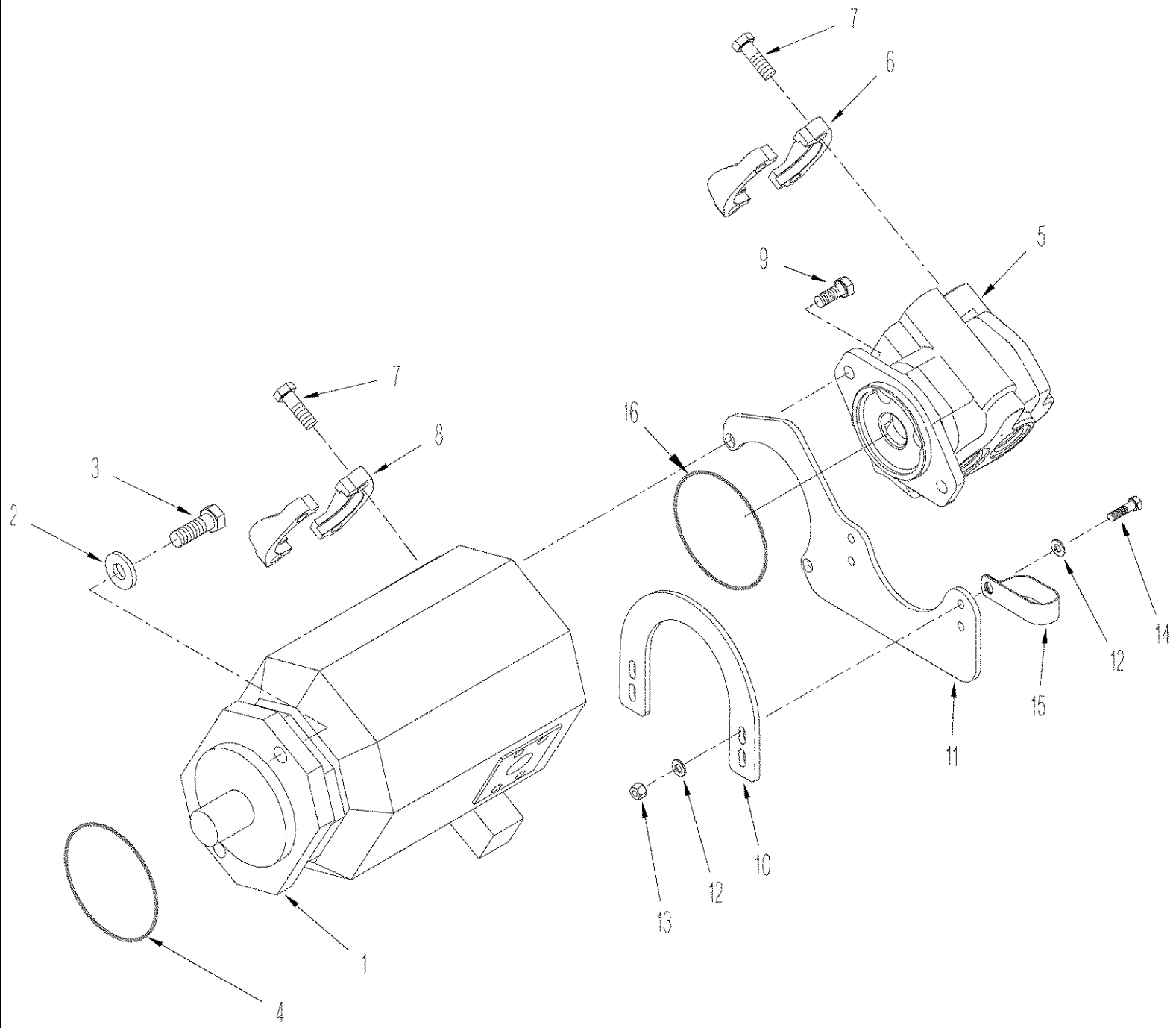

08 -33 HIGH OUTPUT HYDRAULICS - PUMP MOUNTING

ссылка	Номер детали	Кол-во	Описание
1	192296A3	1	PUMP, 100 cc, Piston, See Figure(s) : 08-31
2	86624156	2	WASHER, 21/32" x 1 1/2" x .188", HDN, 21/32 x 1-1/2 x 3/16
3	88706	2	BOLT, Hex, 5/8"-11 x 1 3/4", G8, Full Thd,
4	510828	1	O-RING, -250, 70 Duro, 4.984" ID x .139" Thk, 5 ID x 1/8 Thk; 5
5	87427941	1	PUMP, HYDRAULIC, Gear, See Figure(s) : 08-35
6	A14141	2	FLANGE, Split
7	88904	8	BOLT, Hex, 1/2"-13 x 1 1/2", G8, Full Thd, Cap, HH, G8, 1/2"-13 x 1-1/2"
8	L14386	2	CLAMP, Split
9	43260	2	BOLT, Hex, M12 x 30, 10.9,
10	435539A1	1	SHIELD, Lower
11	293405A1	1	BRACKET, , With Manual Shift Transmission, BSN RVS001940
11	87419459	1	BRACKET, , With Manual Shift Transmission, ASN RVS001940
11	418324A1	1	BRACKET, , With Power Shift Transmission, BSN RVS001940
11	87419160	1	BRACKET, , With Power Shift Transmission, ASN RVS001940
12	87362	8	WASHER, 5/16" SAE,
13	86528579	4	NUT, LOCK, M8 x 1.25, Cl 10,
14	43235	4	BOLT, Hex, M8 x 30, 10.9, Cap, HH, CL 10.9, M8 x 1.25 x 30
15	L111928	2	CLAMP,
16	436514A1	1	O-RING,

08 -34 HIGH OUTPUT HYDRAULICS - PISTON PUMP ASSY

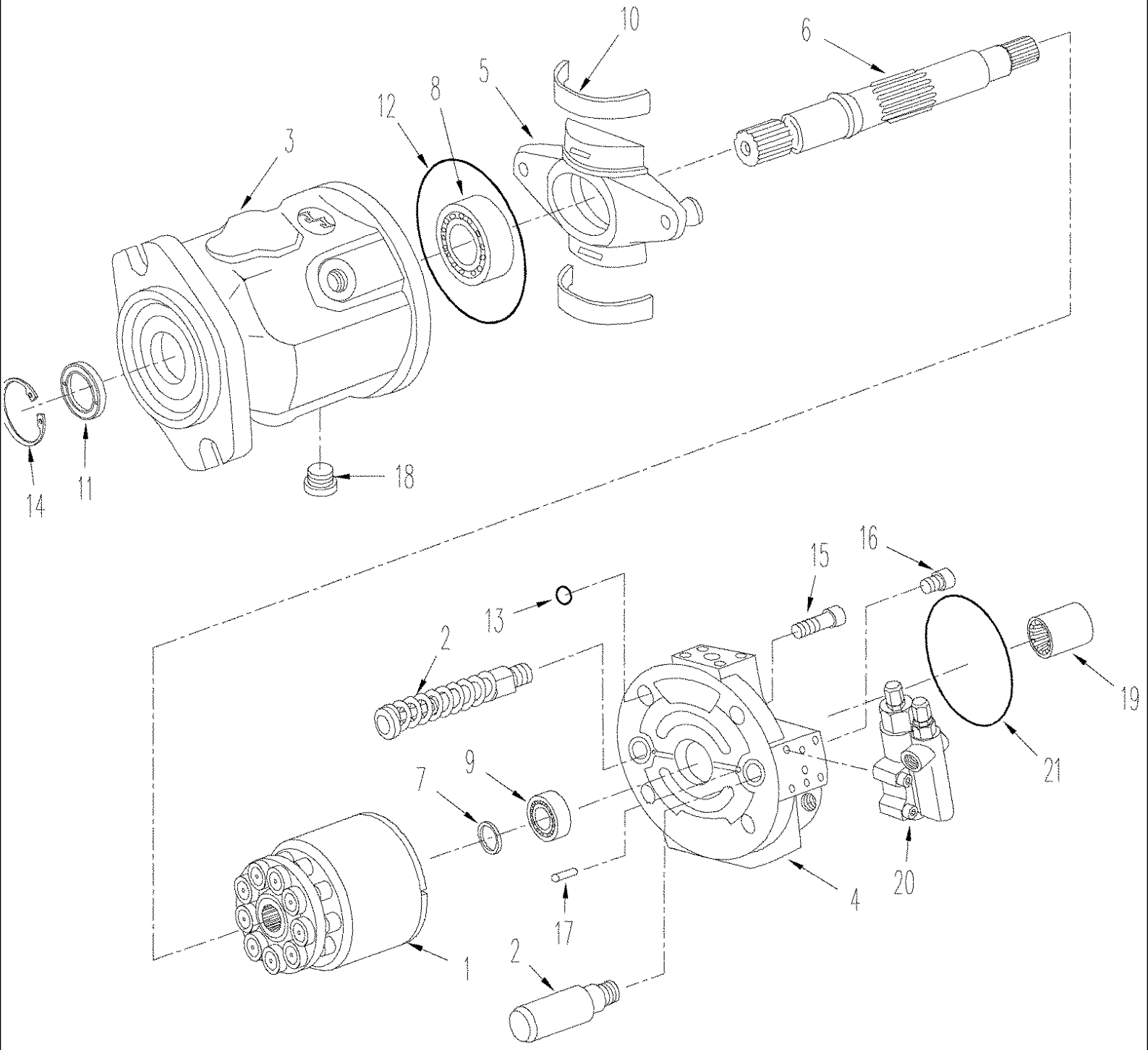

TJ375 TRACTOR - Hydraulic System

08 -34 HIGH OUTPUT HYDRAULICS - PISTON PUMP ASSY

ссылка	Номер детали	Кол-во	Описание
	192296A3	1	PUMP, 100 cc, Inc. 1 - 20
1	NSS	1	NOT SERVICED SEPARATELY, Cylinder Assy
2	NSS	1	NOT SERVICED SEPARATELY, Piston Assy
3	NSS	1	NOT SERVICED SEPARATELY, Housing
4	NSS	1	NOT SERVICED SEPARATELY, Block
5	NSS	1	NOT SERVICED SEPARATELY, Plate, Swash
6	NSS	1	NOT SERVICED SEPARATELY, Shaft
7	NSS	1	NOT SERVICED SEPARATELY, Spacer
8	NSS	1	NOT SERVICED SEPARATELY, Bearing, Roller
9	NSS	1	NOT SERVICED SEPARATELY, Bearing, Roller
10	NSS	2	NOT SERVICED SEPARATELY, Bearing, Support
11	NSS	1	NOT SERVICED SEPARATELY, Seal
12	NSS	1	NOT SERVICED SEPARATELY, O-Ring
13	NSS	4	NOT SERVICED SEPARATELY, O-Ring
14	NSS	1	NOT SERVICED SEPARATELY, Ring, Retaining
15	NSS	4	NOT SERVICED SEPARATELY, Screw
16	9841223	1	PLUG, Hex Soc, 1 1/16"-12 ORB,
17	NSS	1	NOT SERVICED SEPARATELY, Pin, Dowel
18	NSS	2	NOT SERVICED SEPARATELY, Plug
19	NSS	1	NOT SERVICED SEPARATELY, Coupling
20	352875A2	1	VALVE, CONTROL,
21	436514A1	1	O-RING,
	388292A1	1	KIT, SEALS, Inc. 11 - 13, 21

08 -35 GEAR PUMP ASSY

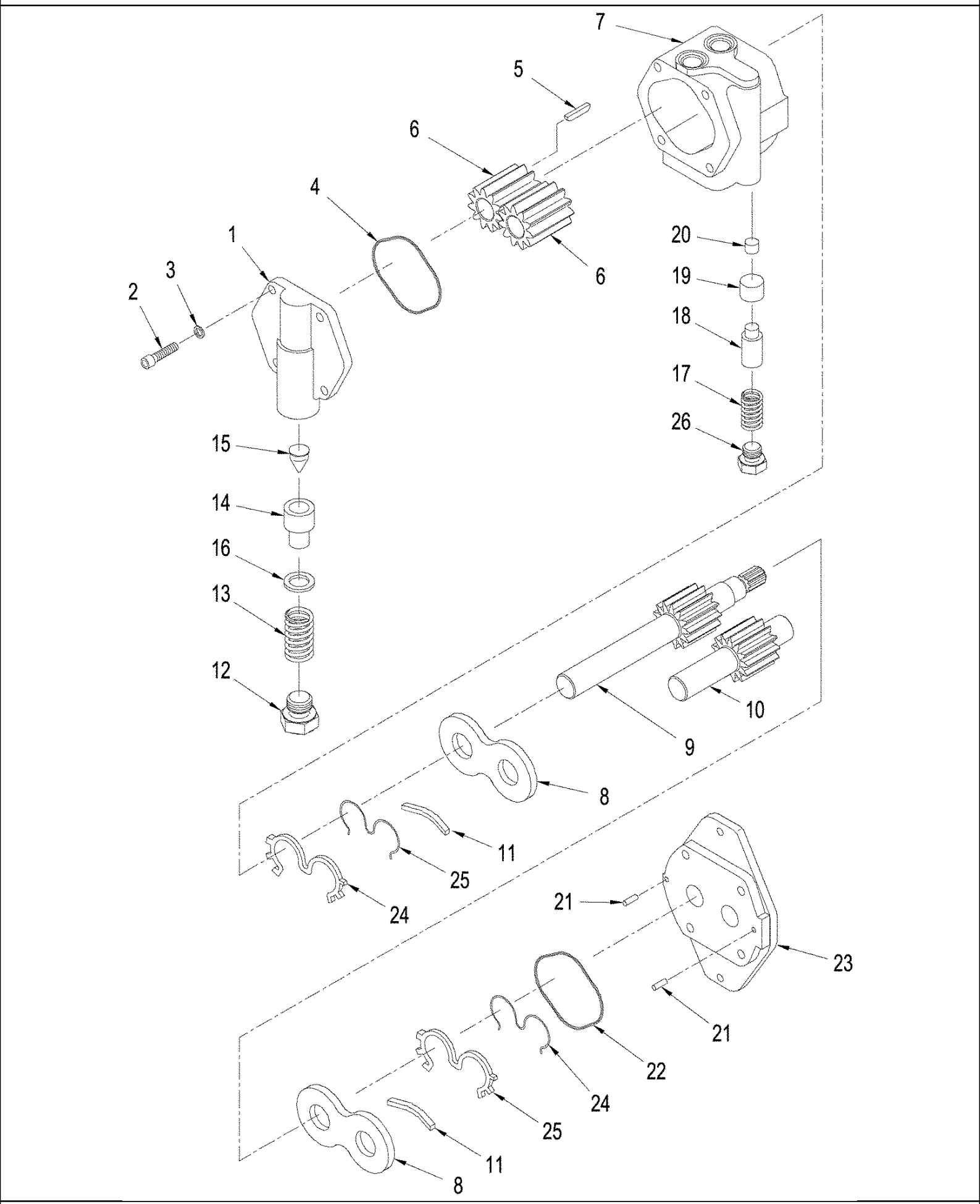

08 -35 GEAR PUMP ASSY

ссылка	Номер детали	Кол-во	Описание
	87427941	1	PUMP, HYDRAULIC, Gear, Inc. 1 - 26
1	NSS	1	NOT SERVICED SEPARATELY, Housing, Rear
2	NSS	8	NOT SERVICED SEPARATELY, Screw
3	NSS	8	NOT SERVICED SEPARATELY, Washer
4	NSS	1	NOT SERVICED SEPARATELY, Seal
5	NSS	1	NOT SERVICED SEPARATELY, Pin, Dowel
6	NSS	2	NOT SERVICED SEPARATELY, Gear
7	NSS	1	NOT SERVICED SEPARATELY, Housing, Gear
8	NSS	2	NOT SERVICED SEPARATELY, Plate, Thrust
9	NSS	1	NOT SERVICED SEPARATELY, Shaft, Gear
10	NSS	1	NOT SERVICED SEPARATELY, Shaft, Gear
11	NSS	2	NOT SERVICED SEPARATELY, Seal
	231061A1	1	VALVE, PRESSURE RELIEF, Inc. 12 - 15
12	NSS	1	NOT SERVICED SEPARATELY, Plug
13	NSS	1	NOT SERVICED SEPARATELY, Spring
14	NSS	1	NOT SERVICED SEPARATELY, Poppet, Valve
15	NSS	1	NOT SERVICED SEPARATELY, Seat
16	NSS	1	NOT SERVICED SEPARATELY, Shim
	245847A1	1	PACKAGE, Relief, Inc. 17 - 20, 26
17	NSS	1	NOT SERVICED SEPARATELY, Spring
18	NSS	1	NOT SERVICED SEPARATELY, Plunger
19	NSS	1	NOT SERVICED SEPARATELY, Poppet, Valve
20	NSS	1	NOT SERVICED SEPARATELY, Seat
21	NSS	2	NOT SERVICED SEPARATELY, Pin, Dowel
22	NSS	1	NOT SERVICED SEPARATELY, Seal
23	NSS	1	NOT SERVICED SEPARATELY, Housing, Front
24	NSS	2	NOT SERVICED SEPARATELY, Seal, Channel
25	NSS	2	NOT SERVICED SEPARATELY, Seal, Backup
26	NSS	1	NOT SERVICED SEPARATELY, Plug
	334450A1	1	KIT, SEALS, Seals, Repair, Inc. 11, 20, 22, 24, 25

08 -36 PRIORITY VALVE ASSY - HIGH OUTPUT HYDRAULICS

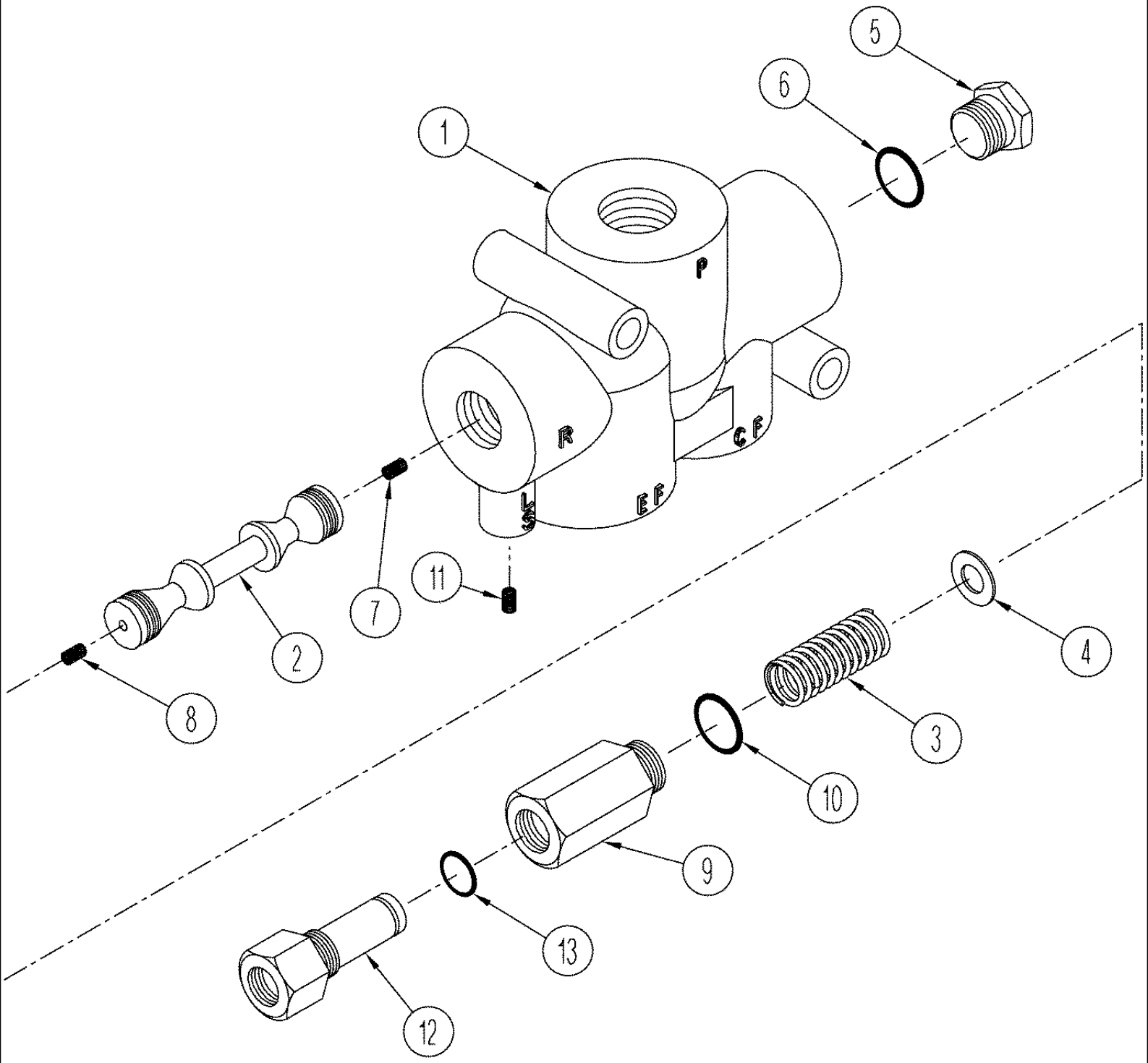

TJ375 TRACTOR - Hydraulic System

08 -36 PRIORITY VALVE ASSY - HIGH OUTPUT HYDRAULICS

ссылка	Номер детали	Кол-во	Описание
	337481A1	1	VALVE, Priority, Inc. 1 - 12
1	NSS	1	NOT SERVICED SEPARATELY, Body
2	NSS	1	NOT SERVICED SEPARATELY, Piston
3	NSS	1	NOT SERVICED SEPARATELY, Spring
4	S302014	1	WASHER,
5	S302018	1	PLUG, Inc. 6
6	NSS	1	NOT SERVICED SEPARATELY, O-Ring
7	S300792	1	SCREW, Orificed
8	S300791	1	SCREW, Orificed
9	S302016	1	PLUG,
10	167268	1	O-RING, 16-1, 90 Duro, 1.171" ID x .116" Thk,
11	NSS	1	NOT SERVICED SEPARATELY, Orifice
12	370152A1	1	VALVE, Relief, Inc. 13
13	NSS	1	NOT SERVICED SEPARATELY, O-Ring

08 -37 HYDRAULIC REMOTE CONTROL VALVE

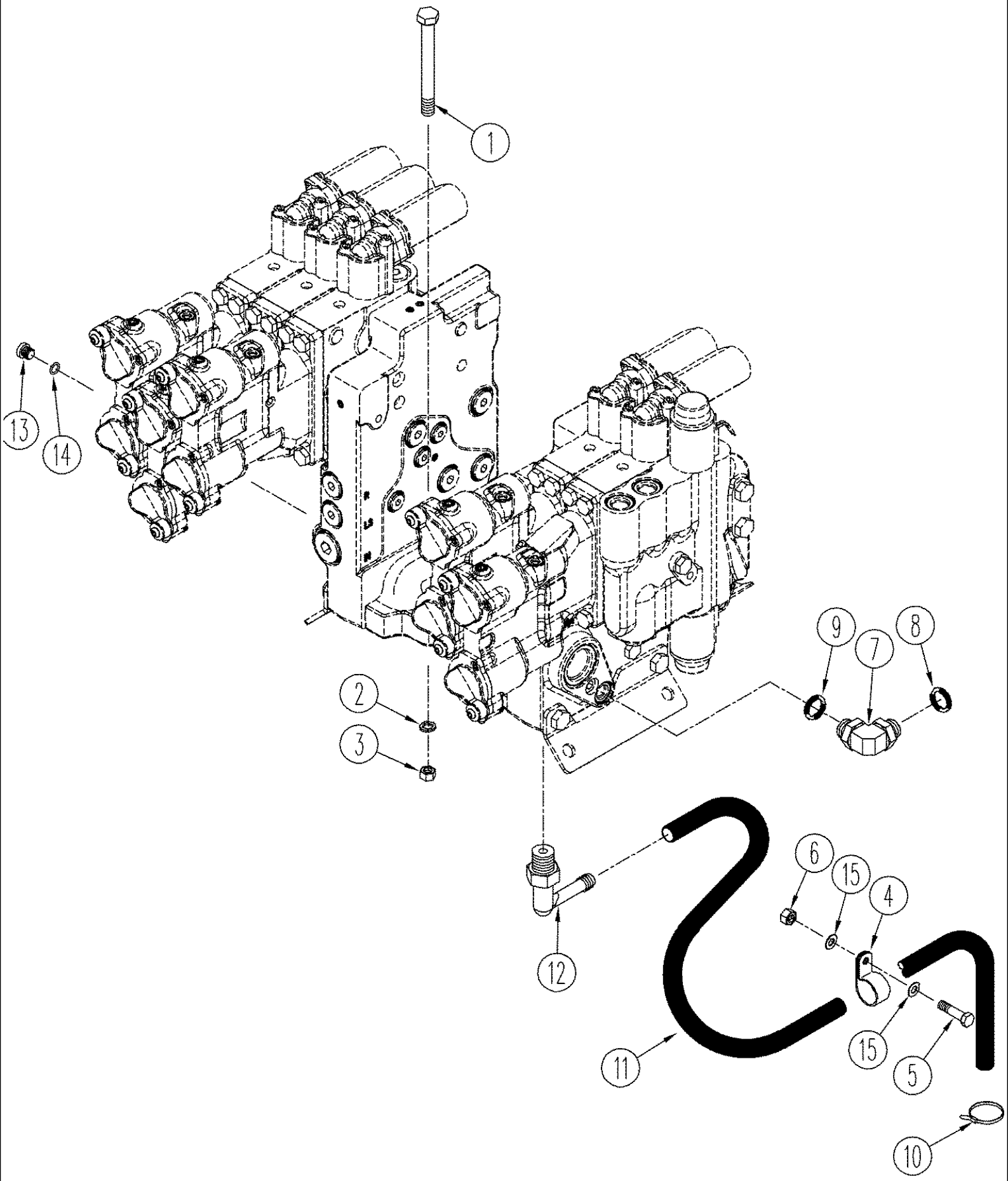

08 -37 HYDRAULIC REMOTE CONTROL VALVE

ссылка	Номер детали	Кол-во	Описание
	407259A1	1	VALVE, Control, Four Stack, Not Illustrated, Inc. 12, 13, See Figure(s) : 08-39, Manual Remote
1	355788	2	BOLT, Hex, M10 x 70, 10.9, Cap, HH, CL 10.9, M10 x 1.5 x 70
2	86625252	2	WASHER, M10 x 21.5 x 2.5, HT, 11 x 21 x 2,5 mm
3	86514720	2	NUT, LOCK, M10 x 1.5
4	9827902	2	CLAMP, 1", Insul, 3/8" Bolt,
5	43235	2	BOLT, Hex, M8 x 30, 10.9, Cap, HH, CL 10.9, M8 x 1.25 x 30
6	43362	2	NUT, M8, Cl 10,
7	86579689	1	ELBOW, 90є, 13/16"-18 ORFS x M14 x 1.5 ORB, Includes 8, 9
8	9992298	1	O-RING, -014, 90 Duro, .489" ID x .070" Thk,
9	86639042	1	O-RING, Cl 6, 11.3MM ID x 2.2 Thk, 11,3 ID x 2,2
10	435437A1	2	STRAP, CABLE, Tie
11	320374A1	AR	HOSE, Drain, 889 mm (35 in), Cut From : 443078A1
12	1289481C1	AR	ELBOW, 90, 1/4 stem x 1/8 PT
13	221576A1	1	PLUG, Hex Soc, M14 x 1.5, ORB, Includes 14
14	86639042	1	O-RING, Cl 6, 11.3MM ID x 2.2 Thk, 11,3 ID x 2,2
15	86624176	4	WASHER, M10 x 20 x 2, 9 x 20 x 1,5 mm
	365947A1	1	KIT, Remote Valve, Five Stack, Inc. 11, 7, & 12, See Figure: 08-40

TJ375 TRACTOR - Hydraulic System

08 -38 MANIFOLD VALVE ASSY

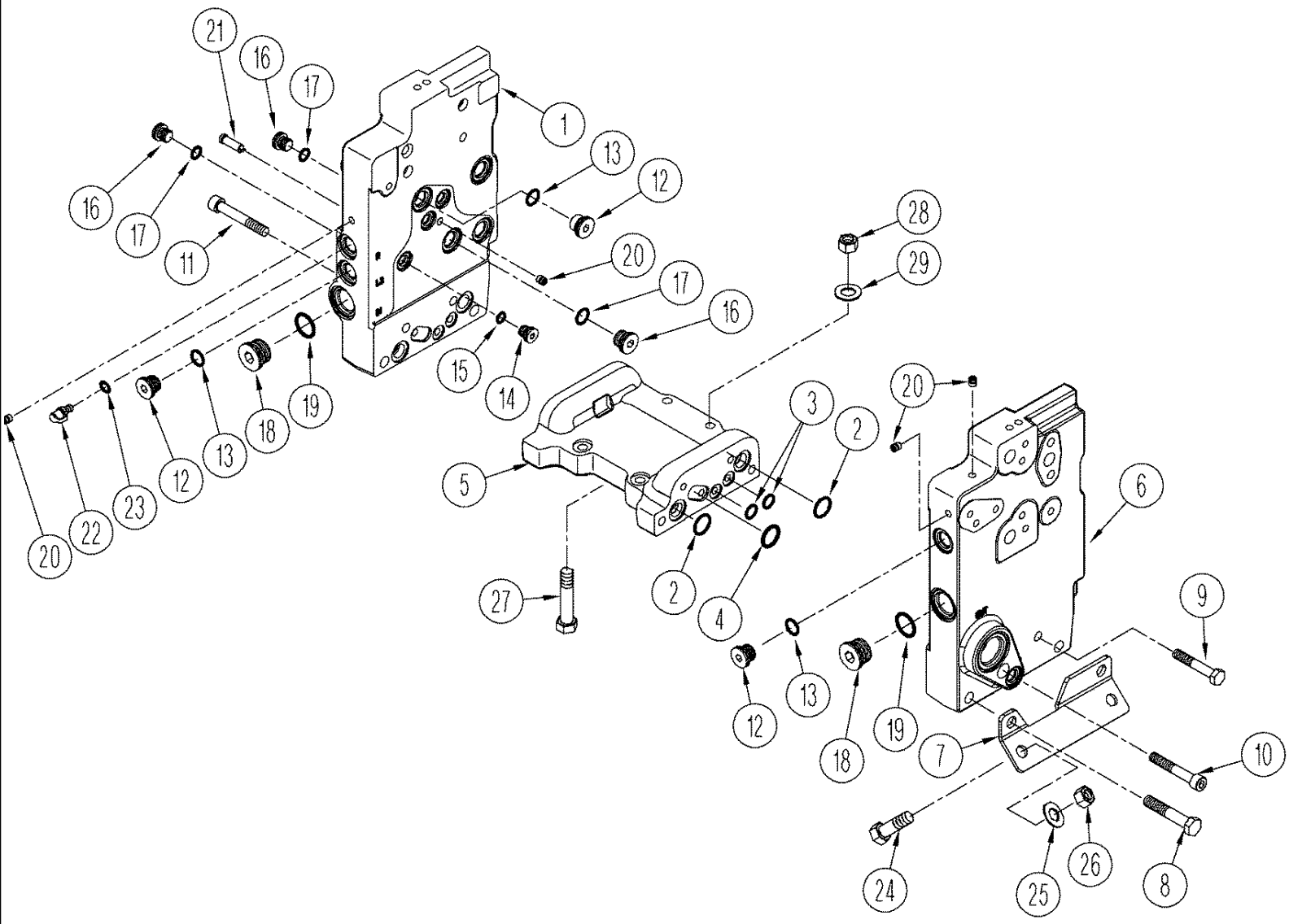

TJ375 TRACTOR - Hydraulic System

08 -38 MANIFOLD VALVE ASSY

ссылка	Номер детали	Кол-во	Описание
	404434A1	1	VALVE, Inc. 1 - 21
1	NSS	1	NOT SERVICED SEPARATELY, Valve, Intake, LH
2	277634	4	O-RING, -117, 90 Duro, .799" ID x .103" Thk, 90 Duro, .799" ID x .103" Thk
3	272344	4	O-RING, -112, 90 Duro, .487" ID x .103" Thk,
4	86505727	2	O-RING, -211, 70 Duro, .796" ID x .139" Thk, 1/8 ID x 13/16; 5
5	NSS	1	NOT SERVICED SEPARATELY, Valve, Connector
6	NSS	1	NOT SERVICED SEPARATELY, Valve, Outlet, Right-Hand
7	338681A1	2	BRACKET,
8	86639228	4	BOLT, Hex, M12 x 65, 10.9, M12 x 65; 10.9
9	86508619	2	BOLT, Hex, M10 x 60, 10.9,
10	86639228	1	BOLT, Hex, M12 x 65, 10.9, M10 x 65; 8.8
11	86642461	1	SCREW, Socket, M10 x 70
12	221578A1	10	PLUG, Hex Soc, M18 x 1.5, ORB, Includes 13
13	86639043	10	O-RING, 15,3 ID x 2,2
14	221573A1	3	PLUG, Hex Soc, M12 x 1.5, ORB, M12 orb x 13, Includes 15
15	86642448	3	O-RING, Cl 6, 9.3MM ID x 2.2 Thk, 9,3 ID x 2,2
16	221576A1	7	PLUG, Hex Soc, M14 x 1.5, ORB, Includes 17
17	86639042	7	O-RING, Cl 6, 11.3MM ID x 2.2 Thk, 11,3 ID x 2,2
18	221580A1	2	PLUG, Hex Soc, M27 x 2, ORB, Includes 19
19	86639045	2	O-RING, Cl 6, 23.6MM ID x 2.9 Thk, 23,6 ID x 2,9
20	353828A1	9	PLUG, Expansion
21	326965A1	1	SCREEN,
22	358968A1	1	COUPLING, M18 orb x 1,5, Diagnostic, If Used, Inc. 23
23	86639043	1	O-RING, 15,3 ID x 2,2
24	337563	4	BOLT, Hex, M12 x 40, 10.9, Full Thd, Cap, HH, CL 10.9, M12 x 1.75 x 40
25	86625255	4	WASHER, M13.5 x 24.5 x 3, HT,
26	412126	4	NUT, LOCK, M12 x 1.75, Cl 8,
27	86508619	2	BOLT, Hex, M10 x 60, 10.9,
28	86514720	2	NUT, LOCK, M10 x 1.5
29	86625252	2	WASHER, M10 x 21.5 x 2.5, HT, 11 x 21 x 2,5 mm

08 -39 REMOTE VALVE ASSY - MANUAL REMOTE, BSN RVS001927

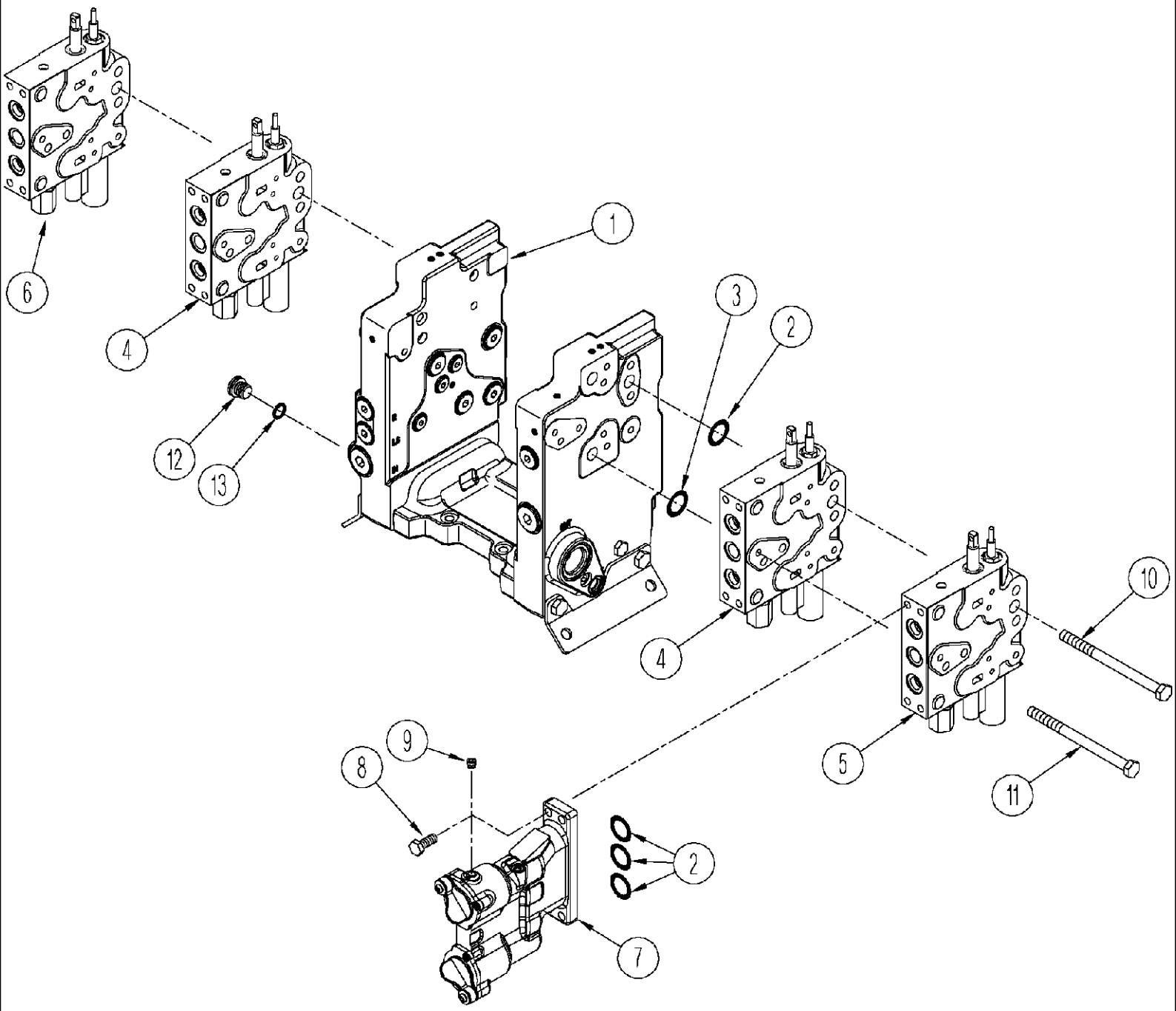

TJ375 TRACTOR - Hydraulic System

08 -39 REMOTE VALVE ASSY - MANUAL REMOTE, BSN RVS001927

ссылка	Номер детали	Кол-во	Описание
	407259A1	1	VALVE, Control Four Stack, Inc. 1 - 16
1	404434A1	1	VALVE, See Figure(s) : 08-38
2	277634	24	O-RING, -117, 90 Duro, .799" ID x .103" Thk, 90 Duro, .799" ID x .103" Thk
3	272344	8	O-RING, -112, 90 Duro, .487" ID x .103" Thk,
4	310788A1	2	VALVE, Main, See Figure(s) : 08-42
5	311134A1	1	VALVE, Auxiliary, RH, See Figure(s) : 08-42
6	311137A1	1	VALVE, Auxiliary, LH, See Figure(s) : 08-42
7	435375A1	4	COUPLING, BREAK AWAY, See Figure(s) : 08-41
8	9846677	16	BOLT, Hex, M10 x 25, 10.9, Full Thd, Cap, HH, CL 10.9, M10 x 1.5 x 25
9	86637724	4	PLUG, Hex Soc, 1/8"-27 NPTF, Hex Socket, 1/8 PT
10	9501756	4	BOLT, Hex, M12 x 110, 10.9,
11	86556139	2	BOLT, Hex, M10 x 110, 10.9, M10 x 110; 10.9
12	221576A1	1	PLUG, Hex Soc, M14 x 1.5, ORB, Includes 13
13	86639042	1	O-RING, Cl 6, 11.3MM ID x 2.2 Thk, 11,3 ID x 2,2

08 -40 REMOTE VALVE ASSY - ELECTRONIC CONTROLLED

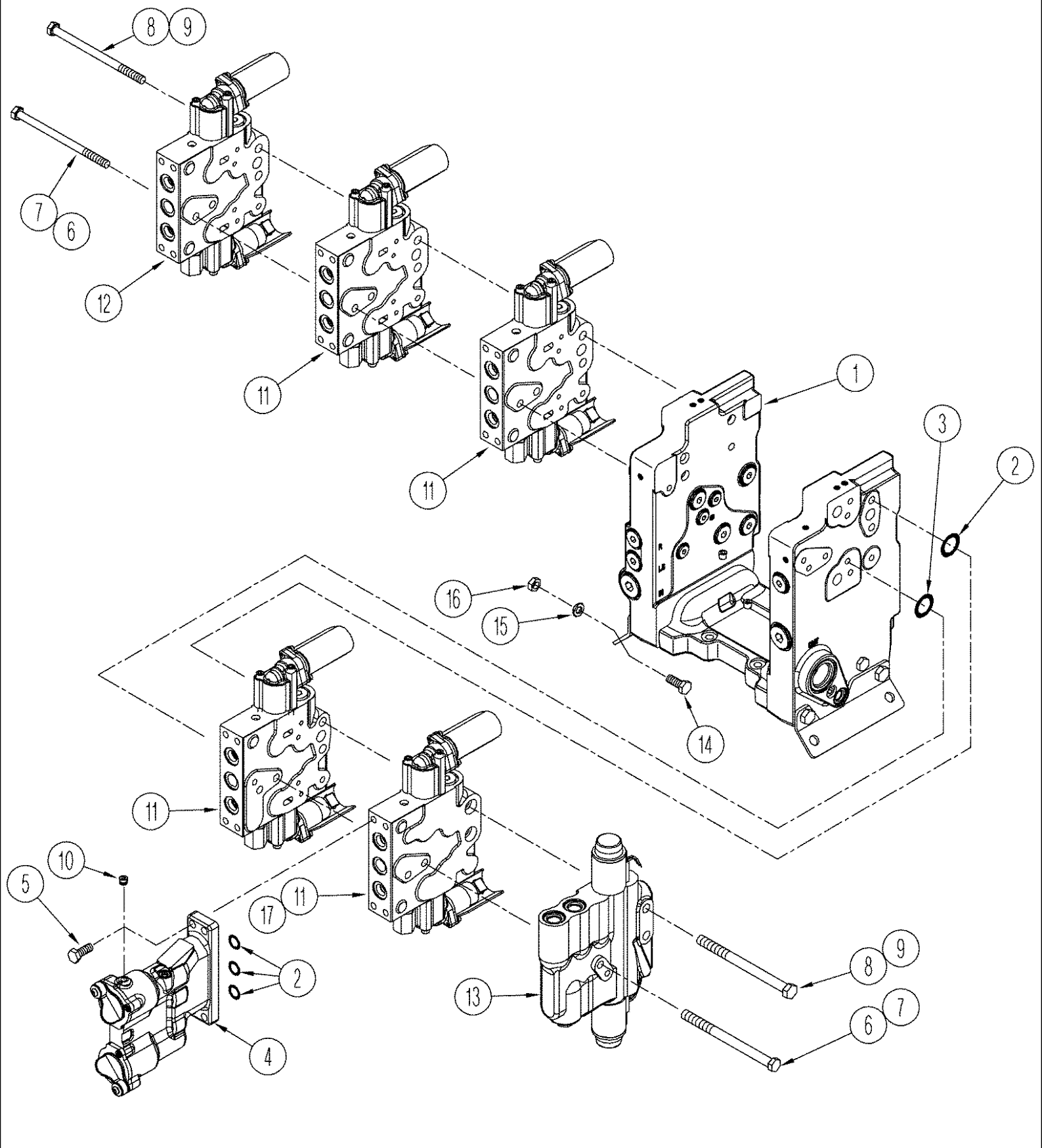

08 -40 REMOTE VALVE ASSY - ELECTRONIC CONTROLLED

ссылка	Номер детали	Кол-во	Описание
1	404434A1	1	VALVE, See Figure(s) : 08-38
2	277634	AR	O-RING, -117, 90 Duro, .799" ID x .103" Thk, 90 Duro, .799" ID x .103" Thk
3	272344	AR	O-RING, -112, 90 Duro, .487" ID x .103" Thk,
4	435375A1	AR	COUPLING, BREAK AWAY, See Figure(s) : 08-41
5	9846677	AR	BOLT, Hex, M10 x 25, 10.9, Full Thd, Cap, HH, CL 10.9, M10 x 1.5 x 25
6	86556139	AR	BOLT, Hex, M10 x 110, 10.9, M10 x 110; 10.9
7	86639227	AR	BOLT, Hex, M10 x 160, 10.9, M10 x 160; 10.9
8	9501756	AR	BOLT, Hex, M12 x 110, 10.9,
9	86837481	AR	SCREW, Hex Soc Hd, M12 x 150, 12.9, M12 x 160; 10.9
10	86637724	5	PLUG, Hex Soc, 1/8"-27 NPTF, Hex Socket, 1/8 PT
11	292295A3	AR	VALVE, Main, Four and Five Stack, See Figure: 08-44
12	393972A3	1	VALVE, Auxiliary, LH, See Figure: 08-43
13	319131A4	1	VALVE, Hitch, See Figure: 08-41
14	43260	AR	BOLT, Hex, M12 x 30, 10.9,
15	86625255	4	WASHER, M13.5 x 24.5 x 3, HT,
16	412126	4	NUT, LOCK, M12 x 1.75, Cl 8,
17	393973A3	1	VALVE, Auxiliary, RH, See Figure: 08-43
	365947A1	1	KIT, Remote Valve, Five Stack, Inc. 2 - 11, See Figure: 08-37

08 -41 COUPLER VALVE ASSY

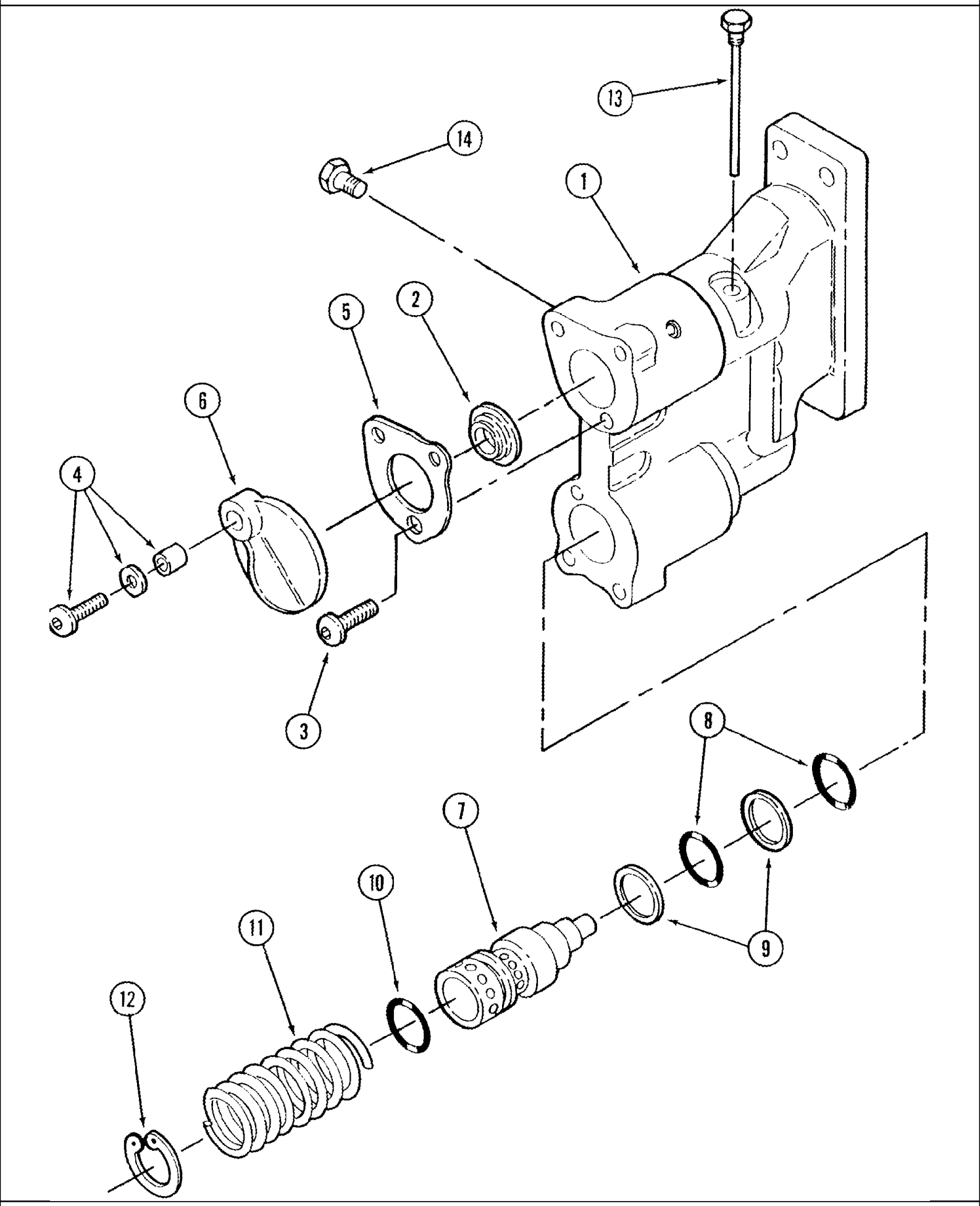

TJ375 TRACTOR - Hydraulic System

08 -41 COUPLER VALVE ASSY

ссылка	Номер детали	Кол-во	Описание
	435375A1	1	COUPLING, BREAK AWAY, Consists Of : 1 - 7
1	NSS	1	NOT SERVICED SEPARATELY, Body
2	240969A1	2	SEAL, Dust
3	427104A1	4	SCREW,
4	240973A2	2	SCREW, With Sleeve and Washer
5	292326A1	2	PLATE, Cover
6	240974A2	2	COVER, DOOR, Dust
7	321623A2	2	COUPLING, QUICK, MALE,
	345193A1	1	KIT, SEALS, Coupler, Consists Of : 8 - 10
8	14454480	4	O-RING, -027, 70 Duro, 1.301" ID x .070" Thk,
9	93332C1	4	SEAL ASSY.,
10	345192A1	2	SEAL,
11	93330C1	2	SPRING, VALVE,
12	86013223	2	RING, SNAP, 1.625", Int, #162, 1.625", Int, #162
13	367755A1	2	RETAINER, Retaining
14	86642422	1	PLUG, Hex Socket, 1/4 PT

08 -42 MAIN AND AUXILIARY VALVE ASSY - MANUAL REMOTE, BSN RVS001927

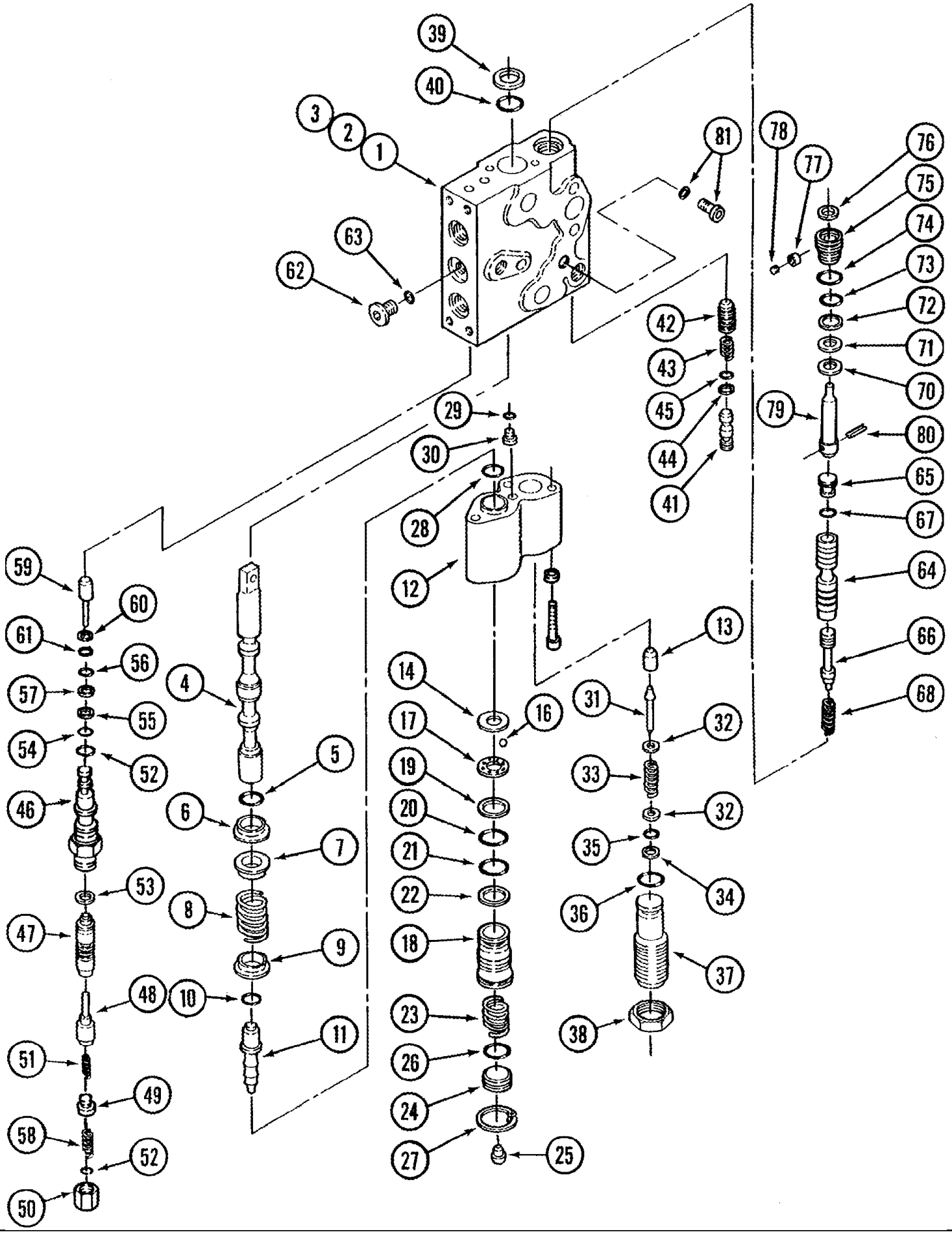

TJ375 TRACTOR - Hydraulic System

08 -42 MAIN AND AUXILIARY VALVE ASSY - MANUAL REMOTE, BSN RVS001927

ссылка	Номер детали	Кол-во	Описание
	310788A1	1	VALVE, Main, Inc. 1, 4 - 81
	311134A1	1	VALVE, Auxiliary, RH, Inc. 2, 4 - 81
	311137A1	1	VALVE, Auxiliary, LH, Inc. 3, 4 - 81
1	NSS	1	NOT SERVICED SEPARATELY, Body
2	NSS	1	NOT SERVICED SEPARATELY, Body
3	NSS	1	NOT SERVICED SEPARATELY, Body
	310940A1	1	SPOOL, Inc. 4 - 11
4	NSS	1	NOT SERVICED SEPARATELY, Spool
5	1994608C1	1	O-RING,
6	311003A1	1	WASHER,
7	310941A1	1	SEAT, SPRING,
8	311002A1	1	SPRING,
9	310942A1	1	SEAT, SPRING,
10	86010510	1	O-RING, 2-1, .239" ID x .064" Thk, 2-1, .239" ID x .064" Thk
11	246405A1	1	STUD,
	310982A1	1	DETENT, Auxiliary, Inc. 12 - 38
	310979A1	1	COVER, Detent, Inc. 12, 13
12	NSS	1	NOT SERVICED SEPARATELY, Cover
13	1976937C1	1	SEAT, VALVE,
14	G108912	1	WASHER,
15	9832203	3	SCREW, Hex Soc Hd, M6 x 25, 8.8, Socket, M6 x 25; 8.8
16	86624942	8	BALL, 7/32" Dia, 7/32; 24,CRS, Chrome
17	G108911	1	WASHER,
	G108921	1	PISTON, Detent, Inc. 18 - 22
18	G108908	1	PISTON,
19	G108922	1	RING, BACK-UP,
20	9861411	1	O-RING, -020, 90 Duro, .864" ID x .070" Thk, 90 Duro, .864" ID x .070" Thk
21	9824050	1	O-RING, -021, 90 Duro, .926" ID x .070" Thk,
22	G108728	1	RING, BACK-UP,
23	G110152	1	SPRING,
	321361A1	1	RETAINER, Inc. 24 - 26
24	NSS	1	NOT SERVICED SEPARATELY, Retainer
25	G107780	1	VALVE, CHECK, Rubber
26	321360A1	1	O-RING,
27	129738	1	RING, SNAP, 1.188", Int, #118,
28	165212	1	O-RING, -015, 90 Duro, .551" ID x .070" Thk, 90 Duro, .551" ID x .070" Thk
29	9825770	1	O-RING, -011, 90 Duro, .301" ID x .070" Thk,
30	G108918	1	ORIFICE,
31	G110279	1	POPPET, VALVE,
32	G110281	2	CUP, SPRING,
33	G109275	1	SPRING,
34	G110289	1	RING, BACK-UP,
35	86637740	1	O-RING, -004, 70 Duro, .07" ID x .070" Thk, 1/16 ID x 1/16
37	G110300	1	PLUG,
38	86637932	1	NUT, Jam, 5/8"-18, G5, 5/8 NF

08 -42 MAIN AND AUXILIARY VALVE ASSY - MANUAL REMOTE, BSN RVS001927

ссылка	Номер детали	Кол-во	Описание
39	65457C1	1	SEAL, Oil
40	1994608C1	1	O-RING,
	1542563C1	1	VALVE, CHECK, Inc. 41 - 45
41	1994580C1	1	PLUG,
42	1543329C1	1	POPPET, VALVE,
43	1994581C1	1	SPRING,
44	G108723	1	RING,
45	165212	1	O-RING, -015, 90 Duro, .551" ID x .070" Thk, 90 Duro, .551" ID x .070" Thk
	278550A2	1	VALVE, CHECK, Load Sense, Inc. 46 - 58
46	NSS	1	NOT SERVICED SEPARATELY, Body, Load Check Valve
47	NSS	1	NOT SERVICED SEPARATELY, Poppet, Main Valve
48	NSS	1	NOT SERVICED SEPARATELY, Poppet, Pilot
49	1957964C1	1	RETAINER,
50	NSS	1	NOT SERVICED SEPARATELY, Cap
51	NSS	1	NOT SERVICED SEPARATELY, Spring, Pilot Poppet
52	167269	2	O-RING, 10-1, 90 Duro, .755" ID x .097" Thk,
53	G108727	1	RING, BACK-UP,
54	9992069	1	O-RING, -016, 90 Duro, .614" ID x .070" Thk,
55	G103862	1	RING,
56	165212	1	O-RING, -015, 90 Duro, .551" ID x .070" Thk, 90 Duro, .551" ID x .070" Thk
57	G108723	1	RING,
58	NSS	1	NOT SERVICED SEPARATELY, Spring, Main Poppet
	1957907C1	1	PISTON ASSY., Inc. 59 - 61
59	1957862C1	1	PISTON,
60	1957861C1	1	WASHER,
61	1957859C1	1	RING, SNAP,
62	86632547	1	PLUG, Hex Soc, 5/16"-24 ORB, Includes 63
63	9617873	1	O-RING, 6-1, 90 Duro, .468" ID x .078" Thk,
	140906A3	1	SLEEVE VALVE, Flow Control, Inc. 64 - 67
64	NSS	1	NOT SERVICED SEPARATELY, Sleeve
65	183491A1	1	PLUG,
66	NSS	1	NOT SERVICED SEPARATELY, Spool
67	272217	1	O-RING, -013, 90 Duro, .426" ID x .070" Thk,
68	185448A2	1	SPRING,
69	292258A1	3	WASHER,
	111205A1	1	VALVE, Flow, Inc. 70 - 80
70	G108957	1	RACE,
71	F13537	1	BEARING,
72	G108956	1	RACE,
73	49861	1	O-RING, -110, 70 Duro, .362" ID x .103" Thk, 3/32 ID x 3/4; 5
74	167269	1	O-RING, 10-1, 90 Duro, .755" ID x .097" Thk,
75	111206A1	1	PLUG,
76	G101060	1	WASHER, Wiper
77	111207A1	2	INSERT,
78	86637659	2	SET SCREW, Hex Soc, #10-32 x 3/16",

08 -42 MAIN AND AUXILIARY VALVE ASSY - MANUAL REMOTE, BSN RVS001927

ссылка	Номер детали	Кол-во	Описание
	1980302C2	1	ROD, Inc. 79, 80
79	1980228C3	1	ROD, ADJUSTMENT,
80	87663	1	PIN, LOCK, 1/8" x 3/4", Slotted,
81	321742A1	1	PLUG, Inc. O-Ring
36	9993141	1	O-RING, -012, 90 Duro, .364" ID x .070" Thk,

08 -43 MAIN AND AUXILIARY VALVE ASSY - ELECTRONIC REMOTE

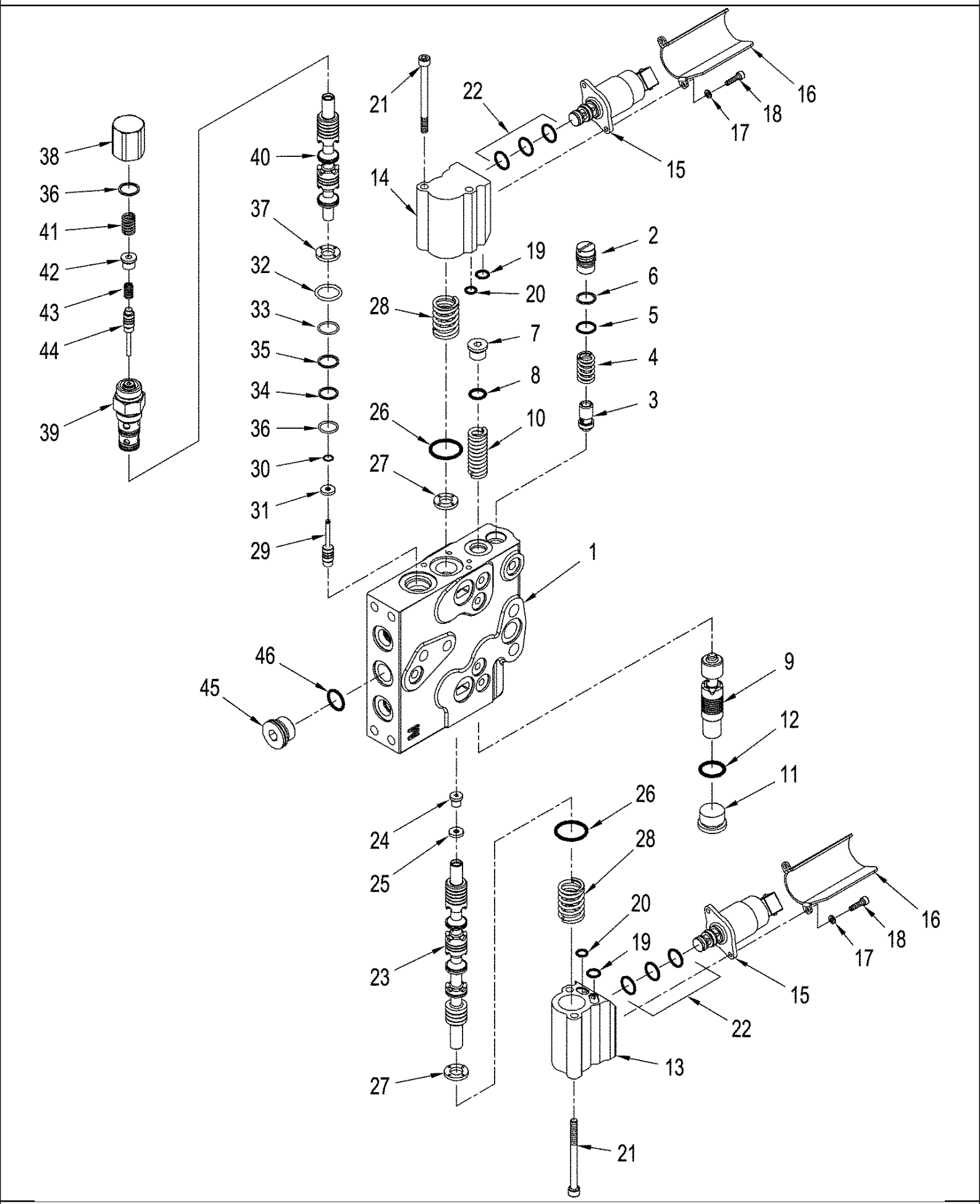

08 -43 MAIN AND AUXILIARY VALVE ASSY - ELECTRONIC REMOTE

ссылка	Номер детали	Кол-во	Описание
	292295A3	1	VALVE, Main, Inc. 1 - 46
	393972A3	1	VALVE, Auxiliary, LH, Inc. 1 - 46
	393973A3	1	VALVE, RH, Inc. 1 - 46
1	NSS	1	NOT SERVICED SEPARATELY, Body
	1542563C1	1	VALVE, CHECK, Logic, Inc. 2 - 6
2	NSS	1	NOT SERVICED SEPARATELY, Plug
3	1543329C1	1	POPPET, VALVE,
4	NSS	1	NOT SERVICED SEPARATELY, Spring
5	G108723	1	RING,
6	165212	1	O-RING, -015, 90 Duro, .551" ID x .070" Thk, 90 Duro, .551" ID x .070" Thk
7	9625178	1	PLUG, Hex Soc, 9/16"-18 ORB, 3/8 orb, Inc. 8
8	167266	1	O-RING, 12-1, 90 Duro, .924 ID x .116" Thk,
9	292321A2	1	SPOOL,
10	301973A1	1	SPRING,
11	86625138	1	PLUG, Hex Soc, 7/8"-14 ORB, 5/8 orb, Includes 12
12	167269	1	O-RING, 10-1, 90 Duro, .755" ID x .097" Thk,
	87354471	1	VALVE, PILOT, EH Pilot Block, Inc. 13 - 20
	87354472	1	VALVE, PILOT, EH Block, Inc. 14 - 22
13	NSS	1	NOT SERVICED SEPARATELY, Body
14	NSS	1	NOT SERVICED SEPARATELY, Body
15	278506A2	1	VALVE, SOLENOID, Proportional
16	353830A1	1	GUARD,
17	86639307	2	WASHER, Lock, 4 mm
18	86624126	2	SCREW, Hex Soc Hd, M4 x 16, 8.8, Socket, M4 x 16; 8.8
19	86629543	1	O-RING, -012, 70 Duro, .364" ID x .070" Thk, 3/8 ID x 1/2 Thk
20	9672548	1	O-RING, -011, 70 Duro, .301" ID x .070" Thk,
21	86639300	2	SCREW, Socket, M6 x 75; 8.8
22	372228A1	1	SEAL, Kit
23	87410063	1	SPOOL,
24	86632547	1	PLUG, Hex Soc, 5/16"-24 ORB, Socket, 1/8 orb, Includes 25
25	167269	1	O-RING, 10-1, 90 Duro, .755" ID x .097" Thk,
26	9672549	2	O-RING, -120, 70 Duro, .987" ID x .103" Thk, .987" ID x .103" Thk
27	436518A1	2	WASHER, Centering
28	301969A2	2	SPRING, Return, Outer
	1957907C1	1	PISTON ASSY., Load Check, Inc. 29 - 31
29	NSS	1	NOT SERVICED SEPARATELY, Piston
30	NSS	1	NOT SERVICED SEPARATELY, Ring, Snap
31	NSS	1	NOT SERVICED SEPARATELY, Washer
	278550A2	1	VALVE, CHECK, Load, Inc. 32 - 44
32	9992069	1	O-RING, -016, 90 Duro, .614" ID x .070" Thk,
33	G103862	1	RING,
34	G108723	1	RING,
35	165212	1	O-RING, -015, 90 Duro, .551" ID x .070" Thk, 90 Duro, .551" ID x .070" Thk
36	167269	2	O-RING, 10-1, 90 Duro, .755" ID x .097" Thk,
37	G108727	1	RING, BACK-UP,

08 -43 MAIN AND AUXILIARY VALVE ASSY - ELECTRONIC REMOTE

ссылка	Номер детали	Кол-во	Описание
38	NSS	1	NOT SERVICED SEPARATELY, Cap
39	NSS	1	NOT SERVICED SEPARATELY, Poppet
40	NSS	1	NOT SERVICED SEPARATELY, Body, Valve
41	NSS	1	NOT SERVICED SEPARATELY, Spring
42	1957964C1	1	RETAINER, Spring
43	NSS	1	NOT SERVICED SEPARATELY, Spring
44	NSS	1	NOT SERVICED SEPARATELY, Poppet
45	86632547	1	PLUG, Hex Soc, 5/16"-24 ORB, Soc. Hd, 1/8 or, Includes 46
46	9617873	1	O-RING, 6-1, 90 Duro, .468" ID x .078" Thk,

08 -44 HITCH VALVE ASSEMBLY - ELECTRONIC REMOTE

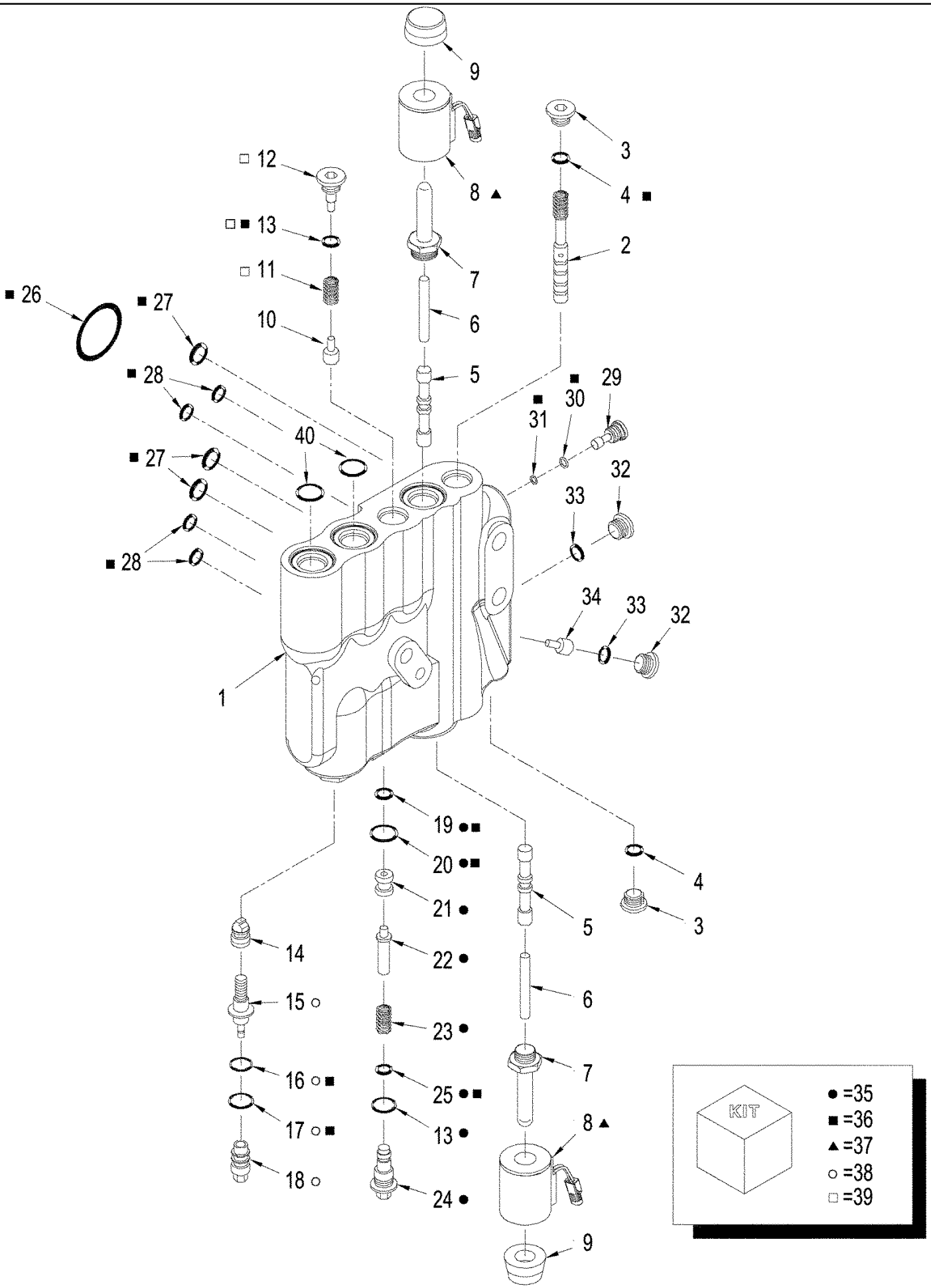

TJ375 TRACTOR - Hydraulic System

08 -44 HITCH VALVE ASSEMBLY - ELECTRONIC REMOTE

ссылка	Номер детали	Кол-во	Описание
	87371678	1	VALVE, Inc. 1 - 34
1	NSS	1	NOT SERVICED SEPARATELY, Housing
2	NSS	1	NOT SERVICED SEPARATELY, Spool
3	86590562	2	PLUG, Hex Soc, 3/4"-16 ORB, Hex, 3/4 Or, Inc. 4
4	128825	2	O-RING, 8-1, 90 Duro, .644" ID x .087" Thk,
5	188104A1	2	SPOOL, Pilot
6	188116A1	2	PIN,
7	188117A1	2	TUBE, Override
8	NSS	2	NOT SERVICED SEPARATELY, Coil
9	188106A1	2	NUT,
10	NSS	1	NOT SERVICED SEPARATELY, Poppet, LDC
11	188114A1	1	SPRING, Compression
12	373760A1	1	PLUG,
13	167269	2	O-RING, 10-1, 90 Duro, .755" ID x .097" Thk,
14	NSS	1	NOT SERVICED SEPARATELY, Poppet Valve
15	NSS	1	NOT SERVICED SEPARATELY, Stem, Servo
16	9672929	1	O-RING, .989" ID x .070" Thk
17	129740	1	O-RING, -023, 70 Duro, 1.051" ID x .070" Thk, 1.051" ID x .070" Thk
18	118111A1	1	TUBE,
19	9825770	1	O-RING, -011, 90 Duro, .301" ID x .070" Thk,
20	373767A1	1	RING, Backup
21	NSS	1	NOT SERVICED SEPARATELY, Seat
22	NSS	1	NOT SERVICED SEPARATELY, Valve
23	NSS	1	NOT SERVICED SEPARATELY, Compression
24	NSS	1	NOT SERVICED SEPARATELY, Plug
25	130282	1	O-RING, -014, 70 Duro, .489" ID x .070" Thk,
26	165217	1	O-RING, -142, 90 Duro, 2.362" ID x .103" Thk,
27	277634	3	O-RING, -117, 90 Duro, .799" ID x .103" Thk, 90 Duro, .799" ID x .103" Thk
28	272344	5	O-RING, -112, 90 Duro, .487" ID x .103" Thk,
29	373761A1	1	PLUG,
30	165202	1	O-RING, 4-1, 90 Duro, .351" ID x .072" Thk,
31	86513328	2	O-RING, 3-1, .301" ID x .064" Thk,
32	86529630	2	PLUG, Hex Soc, 3/8"-24 ORB,
33	86513328	2	O-RING, 3-1, .301" ID x .064" Thk,
34	373758A1	1	VALVE, Check, Load Sense
35	373756A1	1	KIT, Relief
36	373757A1	1	KIT, Seal
37	243254A1	2	KIT, Solenoid
38	87430152	1	KIT, SERVICE, Meter Out
39	87373591	1	KIT, Hitch Valve, Load Drop Check
40	637-63193	2	O-RING, Cl 6, 19.3MM ID x 2.2 Thk,

08 -45 MOTOR RETURN

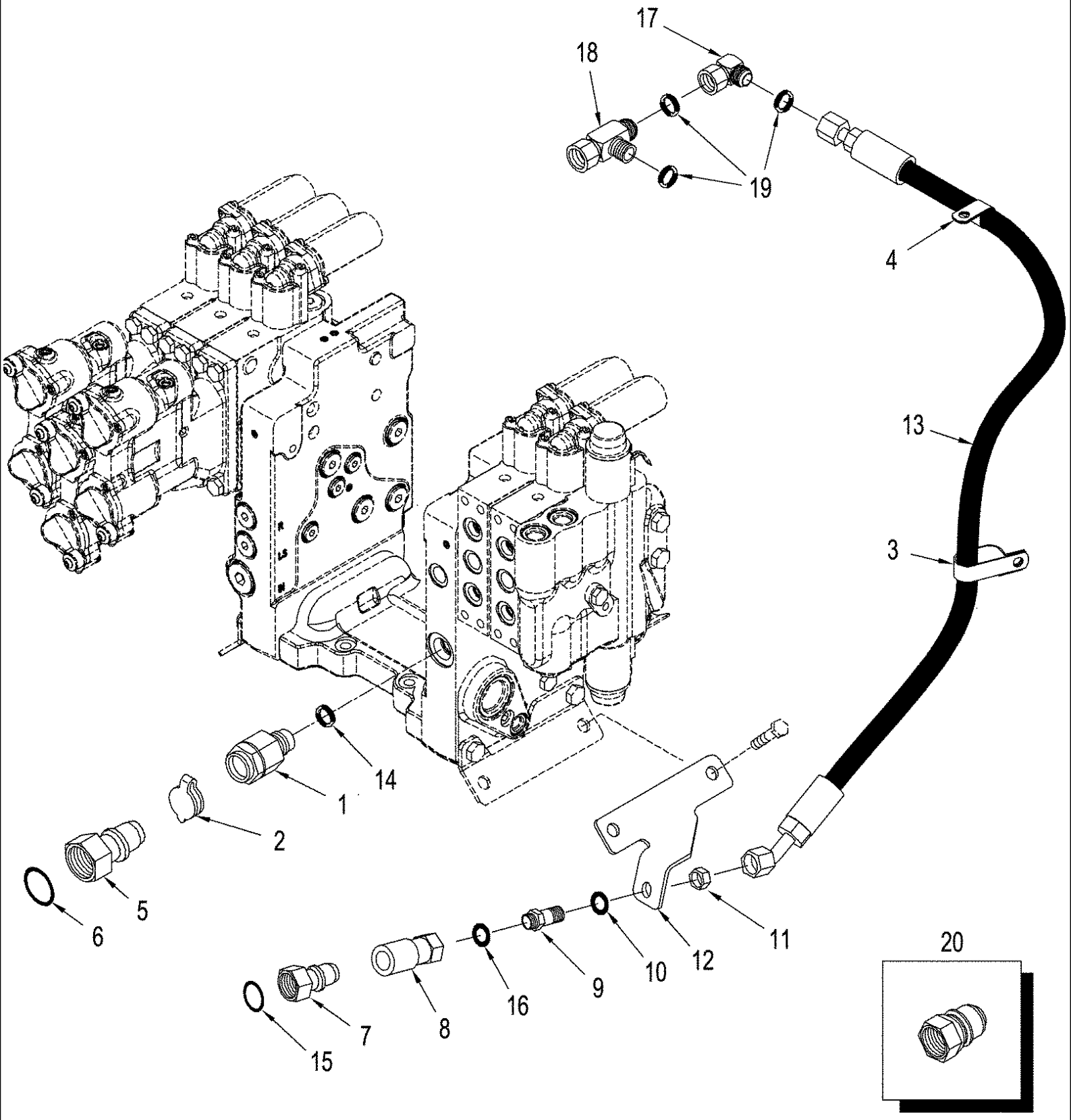

TJ375 TRACTOR - Hydraulic System

08 -45 MOTOR RETURN

ссылка	Номер детали	Кол-во	Описание
1	298291A1	1	BODY, Hydr., 3/4 in, Auxiliary, Main Return
2	334216A1	1	CAP, Dust
3	86637979	1	CLAMP, 13/16", Insul, 3/8" Bolt,
4	R54363	1	CLAMP,
5	347755A1	1	COUPLING, Hydr., 3/4 Male x 1-1/16 Female orb, Inc: 6
6	167266	1	O-RING, 12-1, 90 Duro, .924 ID x .116" Thk,
7	385358A1	1	COUPLING, Hydr., 1/2 Male x 3/8 Female orb, Inc: 15
8	385357A1	1	COUPLING, Hydr., Female
9	436249A1	1	FITTING, 3/4 or x 13/16 fc sl, Inc. 10 & 16
10	9992298	1	O-RING, -014, 90 Duro, .489" ID x .070" Thk,
11	86639083	1	NUT, LOCK, 13/16"-16, ORFS Blkhd, Jam, M12
12	442477A2	1	BRACKET, Motor Drain
13	444060A1	1	HOSE ASSY., 2171 mm (85 in)
14	86598103	2	O-RING, Cl 6, 23.6MM ID x 2.9 Thk, 23,6 ID x 2.9 mm; 6
15	128825	1	O-RING, 8-1, 90 Duro, .644" ID x .087" Thk,
16	9617873	1	O-RING, 6-1, 90 Duro, .468" ID x .078" Thk,
17	84989383	1	ELBOW, 90є, 13/16"-16 ORFS x 13/16"-16 Fem Sw, 90, 1/2 fc sl, Inc. 19
18	86514261	1	TEE, 13/16"-16 ORFS x 13/16"-16 Fem Sw Run, 1/2 fc sl, Inc. 19
19	9992298	4	O-RING, -014, 90 Duro, .489" ID x .070" Thk,
20	87335428	1	FITTING, Implement Coupler, 1/2"-14 nptf
20	87335430	1	FITTING, Implement Coupler, 3/4"-16 orb
20	87335431	1	FITTING, Implement Coupler, 7/8"-14 orb
	719517003	1	KIT, Motor Return / Power Beyond, Inc: 1 - 13, See Figure(s) : 08-14, 08-46

08 -46 COUPLERS - POWER BEYOND

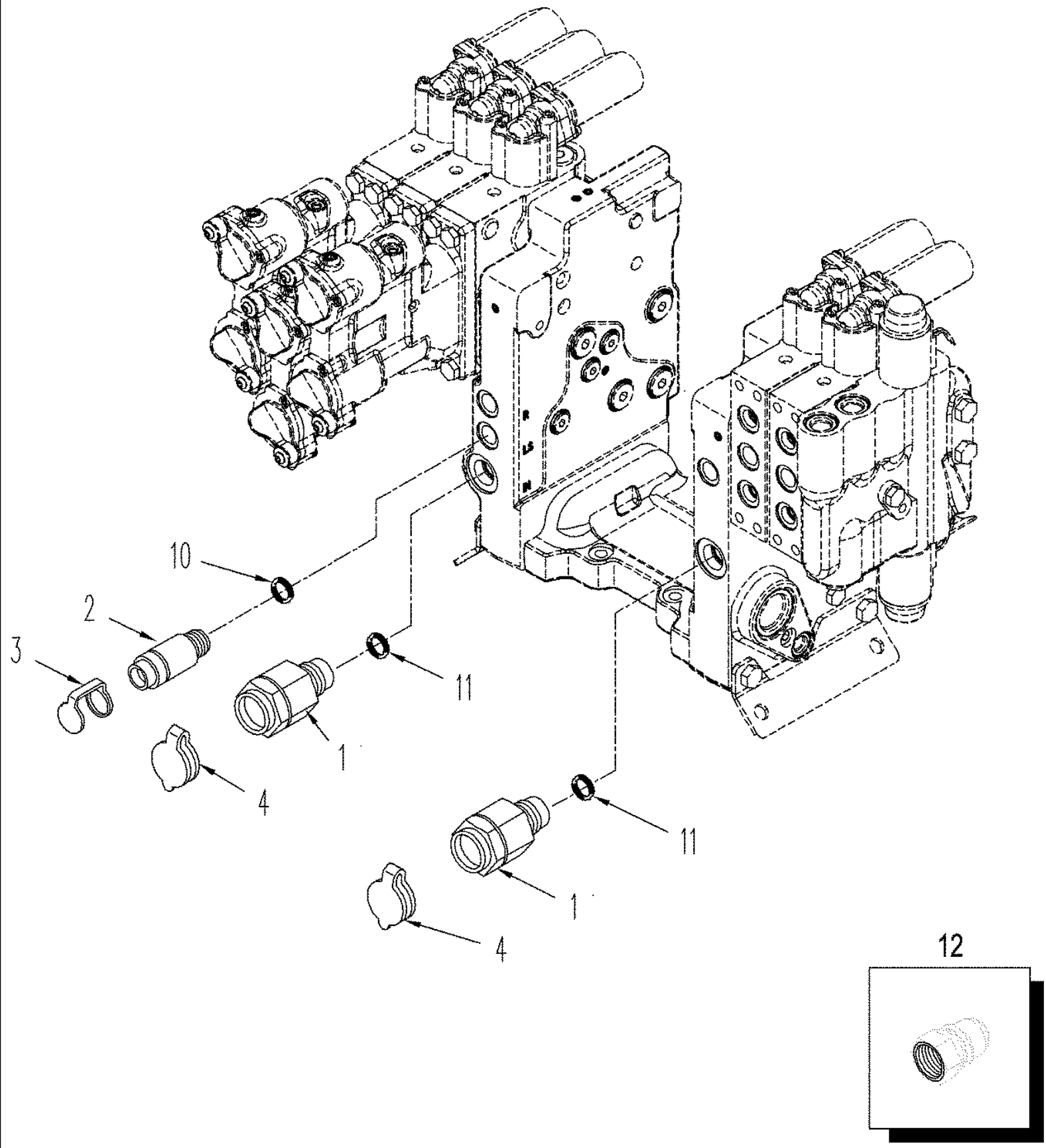

TJ375 TRACTOR - Hydraulic System

08 -46 COUPLERS - POWER BEYOND

ссылка	Номер детали	Кол-во	Описание
1	298291A1	2	BODY, Hydr., 3/4 in, Auxiliary
2	294603A1	1	BODY, Hydr., 1/4 in, Auxiliary
3	334218A1	1	CAP, Dust
4	334216A1	2	CAP, Dust
5	347755A1	2	COUPLING, Hydr., 3/4 in, Inc. 10, Not Illustrated
6	167266	2	O-RING, 12-1, 90 Duro, .924 ID x .116" Thk,
7	347756A1	2	COUPLING, Hydr., 1/4 in, Inc. 8, Not Illustrated
8	9617873	2	O-RING, 6-1, 90 Duro, .468" ID x .078" Thk,
9	385358A1	1	COUPLING, Hydr., 3/8, Case Drain, Not Illustrated
10	86598101	1	O-RING, Cl 6, 15.3MM ID x 2.2 Thk, 15,3 ID x 2,2 Thk; 6
11	86598103	2	O-RING, Cl 6, 23.6MM ID x 2.9 Thk, 23,6ID x 2,9 Thk; 6
12	87335428	1	FITTING, Implement Coupler, 1/2"-14 nptf
12	87335430	1	FITTING, Implement Coupler, 3/4"-16 orb
12	87335431	1	FITTING, Implement Coupler, 7/8"-14 orb
	719517003	1	KIT, Motor Return / Power Beyond, Inc. 1 - 9, See Figure(s) : 08-14, 08-45

TJ375 TRACTOR - Hydraulic System

08 -47 CABLE - TOW VALVE

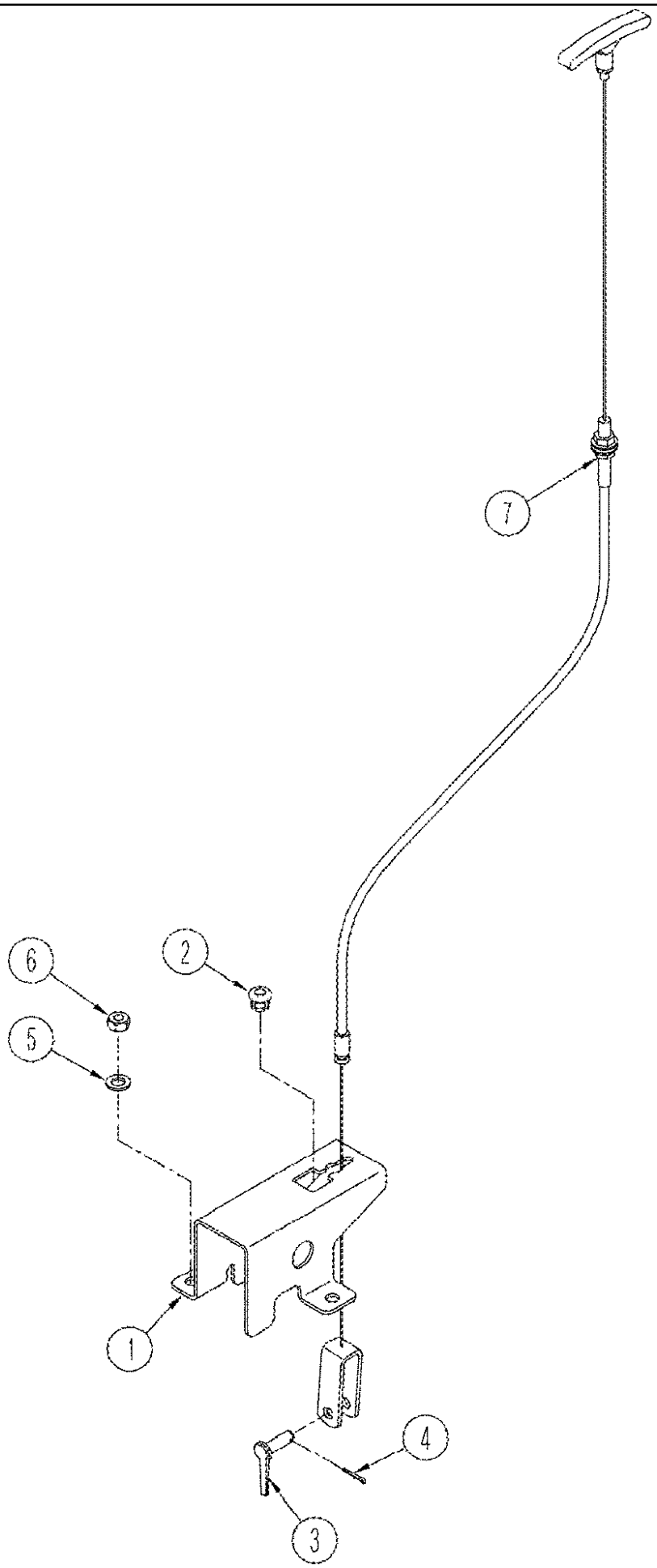

TJ375 TRACTOR - Hydraulic System

08 -47 CABLE - TOW VALVE

ссылка	Номер детали	Кол-во	Описание
1	344904A2	1	SUPPORT ASSY.,
2	A67295	1	PLUG,
3	86639013	1	PIN, CLEVIS, M8 x 25, 8 x 25 mm
4	86637652	1	PIN, SPLIT (COTTER), Int, 9/64" x .054",
5	86624184	2	WASHER, M8 x 16 x 1.6, 9 x 17 x 1,6 mm
6	43362	2	NUT, M8, Cl 10,
7	349863A2	1	CABLE,

08 -48 THREE POINT HITCH HYDRAULICS - MANUAL HITCH

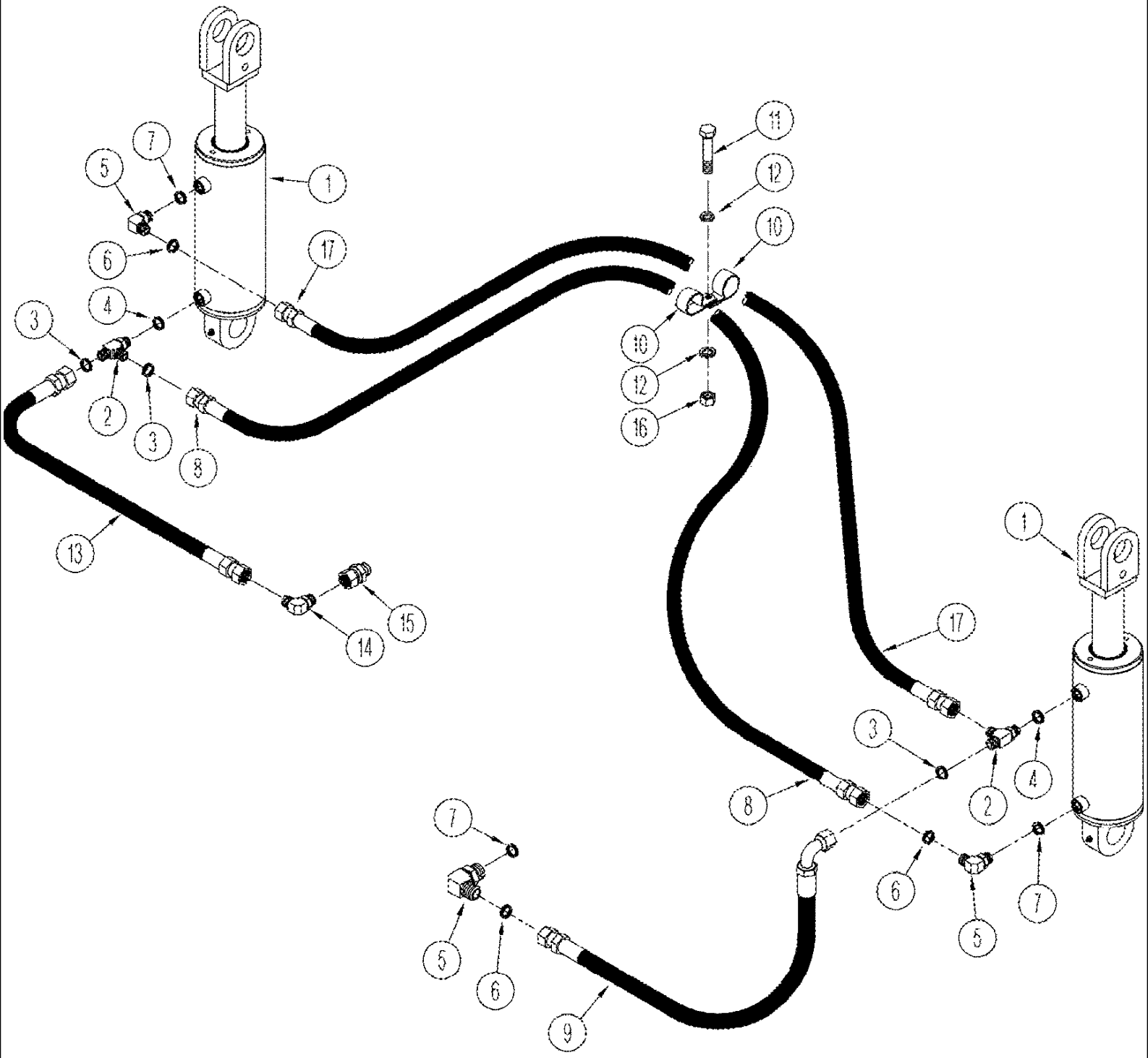

TJ375 TRACTOR - Hydraulic System

08 -48 THREE POINT HITCH HYDRAULICS - MANUAL HITCH

ссылка	Номер детали	Кол-во	Описание
1	403206A1	2	CYLINDER ASSY., See Figure(s) : 8-50
2	86579702	2	TEE, 13/16"-16 ORFS x M18 x 1.5 ORB Run, 13/16 fc sl x 18 Or, Inc. 3, 4
3	9992298	4	O-RING, -014, 90 Duro, .489" ID x .070" Thk,
4	86639043	2	O-RING, Return, 15,3 ID x 2,2
5	86579691	3	ELBOW, 90є, 13/16"-18 ORFS x M18 x 1.5 ORB, Includes 6, 7
6	9992298	3	O-RING, -014, 90 Duro, .489" ID x .070" Thk,
7	86639043	3	O-RING, 15,3 ID x 2,2
8	363126A1	1	HOSE ASSY., Pressure, 1645 mm (65 in)
9	359756A1	1	HOSE ASSY., 320 mm (12-1/2 in)
10	86637979	4	CLAMP, 13/16", Insul, 3/8" Bolt, P-type
11	43235	2	BOLT, Hex, M8 x 30, 10.9, Cap, HH, CL 10.9, M8 x 1.25 x 30
12	86624184	4	WASHER, M8 x 16 x 1.6, 9 x 17 x 1,6 mm
13	430747A1	1	HOSE ASSY., 670 mm (26 in)
14	128828	1	ELBOW, 90є, 7/8"-14, 37є x 1/2"-14, NPTF, 90, 7/8 fl x 1/2 PT
15	435414A1	1	COUPLING, QUICK, MALE, 1/2"-14 NPTF,
16	43362	2	NUT, M8, Cl 10,
17	394732A1	1	HOSE ASSY., Return, 1410 mm (55-1/2 in)

08 -49 THREE POINT HITCH HYDRAULICS - ELECTRONIC CONTROLLED HITCH SYSTEM

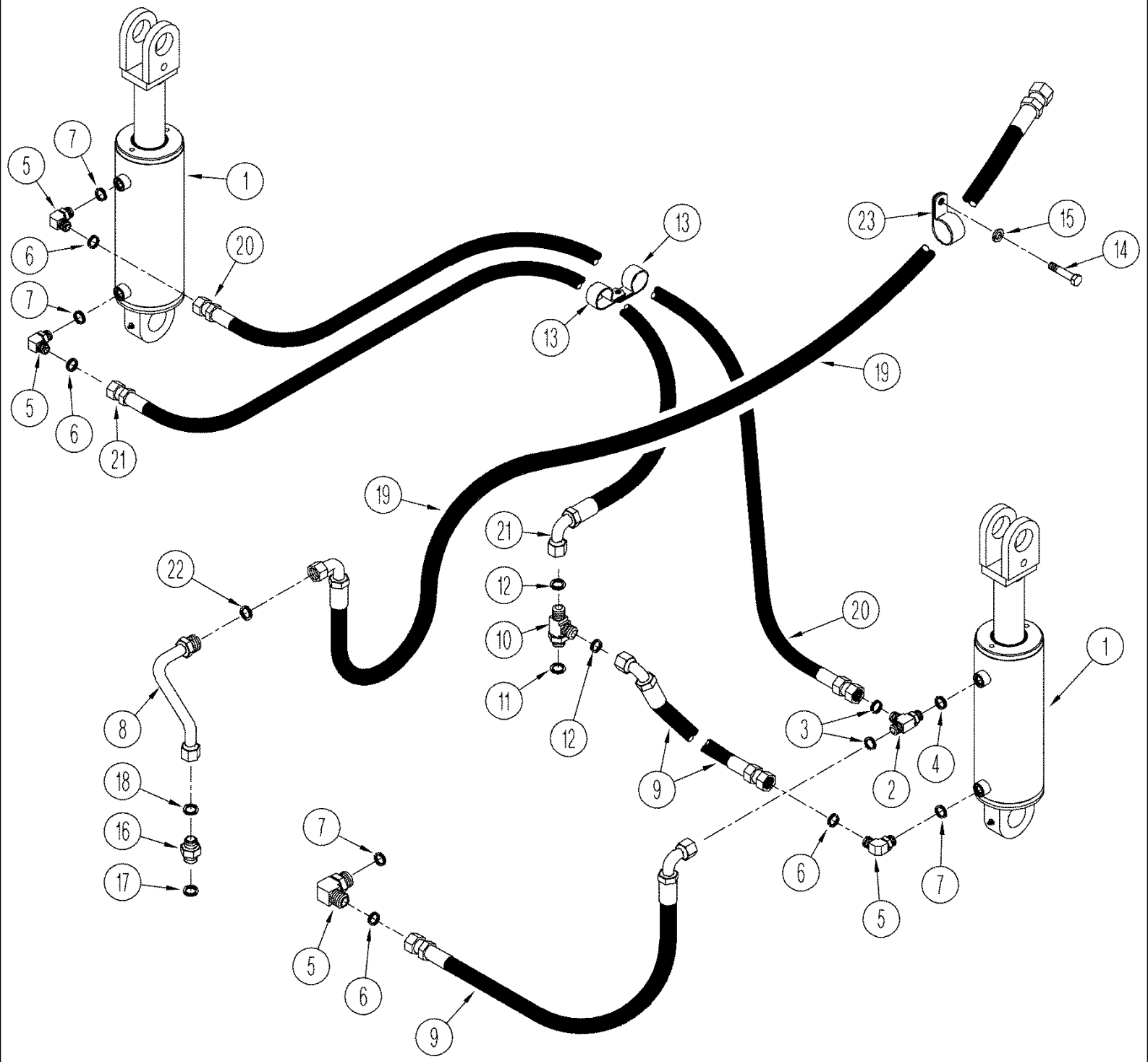

08 -49 THREE POINT HITCH HYDRAULICS - ELECTRONIC CONTROLLED HITCH SYSTEM

ссылка	Номер детали	Кол-во	Описание
1	403206A1	2	CYLINDER ASSY., See Figure(s) : 08-50
2	86579702	1	TEE, 13/16"-16 ORFS x M18 x 1.5 ORB Run, 13/16 fc sl x 18 Or, Inc. 3, 4
3	9992298	2	O-RING, -014, 90 Duro, .489" ID x .070" Thk,
4	86639043	1	O-RING, 15,3 ID x 2,2
5	86579691	4	ELBOW, 90є, 13/16"-18 ORFS x M18 x 1.5 ORB, Includes 6, 7
6	9992298	4	O-RING, -014, 90 Duro, .489" ID x .070" Thk,
7	86639043	4	O-RING, 15,3 ID x 2,2
8	403207A1	1	TUBE ASSY.,
9	360496A1	2	HOSE ASSY., Cylinder Supply, 505 mm (20 in)
10	86639058	1	TEE, 13/16"-16 ORFS x M22 x 1.5 ORB Run, 13/16 fc sl x 22 orb, Inc. 11, 12
11	86639044	1	O-RING, Cl 6, 19.3MM ID x 2.2 Thk, 19,3 ID x 2,2 mm
12	9992298	2	O-RING, -014, 90 Duro, .489" ID x .070" Thk, Pressure Line
13	86637979	4	CLAMP, 13/16", Insul, 3/8" Bolt, P-type
14	43232	1	SCREW, M8 x 16; 10.9
15	86624184	5	WASHER, M8 x 16 x 1.6, 9 x 17 x 1,6 mm
16	86579680	1	CONNECTOR, HYD., 1"-14 ORFS x M22 x 1.5 ORB, Includes 17, 18
17	86639044	1	O-RING, Cl 6, 19.3MM ID x 2.2 Thk, 19,3 ID x 2,2 mm
18	9992069	1	O-RING, -016, 90 Duro, .614" ID x .070" Thk,
19	371017A2	1	HOSE ASSY., Return, 3425 mm (135 in), If Used
19	87427995	1	HOSE ASSY., Return, 3540 mm (139 in), If Used
20	394732A1	1	HOSE ASSY., Return, 1410 mm (55-1/2 in)
21	394733A1	1	HOSE ASSY., Pressure Line, 1397 mm (55 in)
22	9992069	1	O-RING, -016, 90 Duro, .614" ID x .070" Thk,
23	D43839	1	CLAMP, 1-1/8" ID

08 -50 CYLINDER ASSY - THREE POINT HITCH

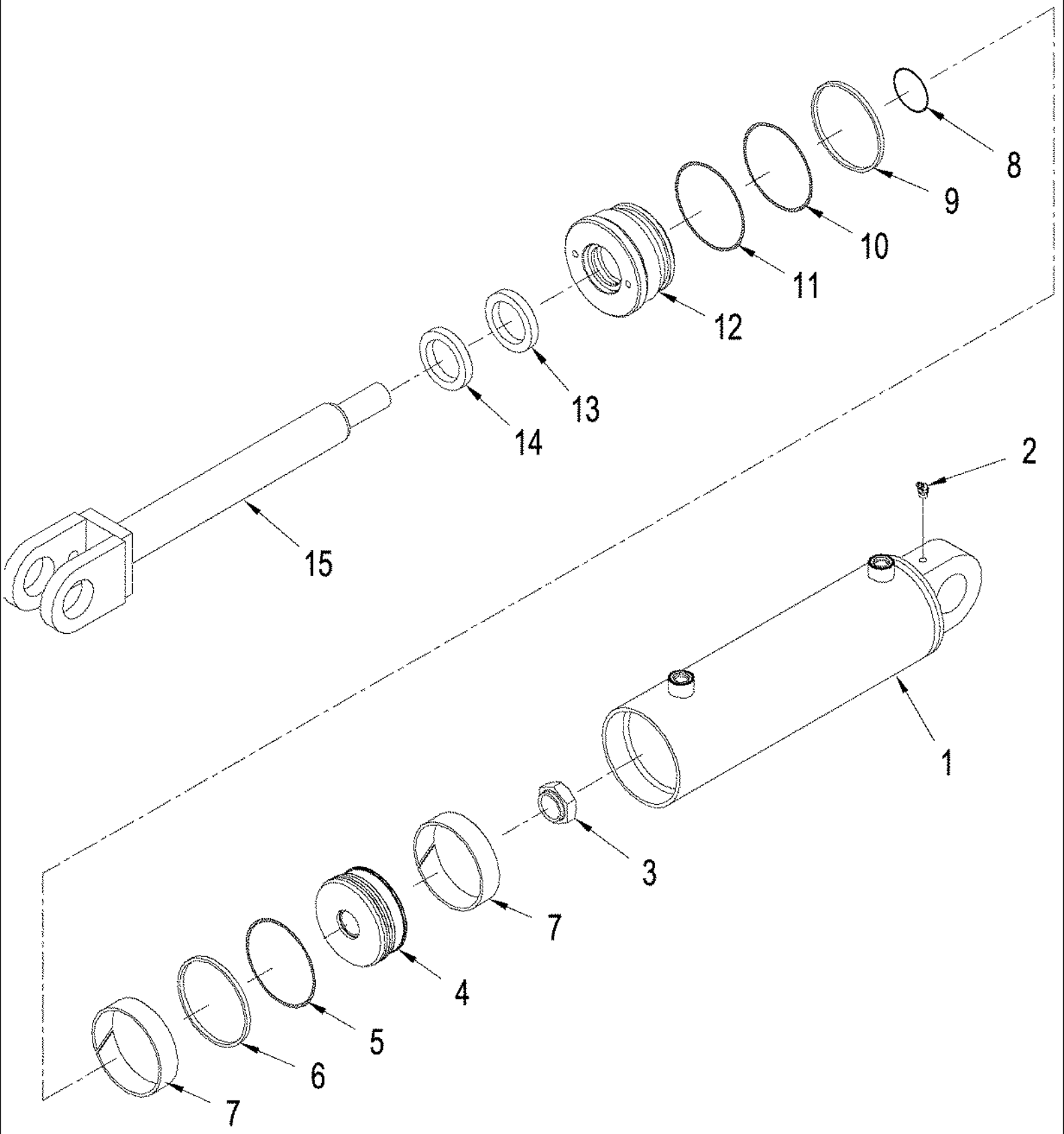

08 -50 CYLINDER ASSY - THREE POINT HITCH

ссылка	Номер детали	Кол-во	Описание
	403206A1	1	CYLINDER ASSY., Three Point Hitch, Lift, Inc. 1 - 15
1	NSS	1	NOT SERVICED SEPARATELY, Barrel
2	NSS	1	NOT SERVICED SEPARATELY, Fitting, Grease
3	86016798	1	NUT, LOCK, 1 1/4"-12, GC, Lock, 1-1/4 NF
4	388150A1	1	JACK PISTON,
5	NSS	1	NOT SERVICED SEPARATELY, Ring
6	NSS	1	NOT SERVICED SEPARATELY, Seal, Piston
7	NSS	2	NOT SERVICED SEPARATELY, Ring, Wear
8	NSS	1	NOT SERVICED SEPARATELY, O-Ring
9	NSS	1	NOT SERVICED SEPARATELY, Ring, Backup
10	NSS	1	NOT SERVICED SEPARATELY, O-Ring
11	NSS	1	NOT SERVICED SEPARATELY, O-Ring
12	388152A1	1	CAP CYLINDER END,
13	NSS	1	NOT SERVICED SEPARATELY, Seal
14	NSS	1	NOT SERVICED SEPARATELY, Wiper
15	387530A1	1	ROD, PISTON,
	388153A1	1	PACKAGE, SEALS, Inc. 5 - 11, 13, 14

08 -51 VALVE ASSY - DIFFERENTIAL LOCK

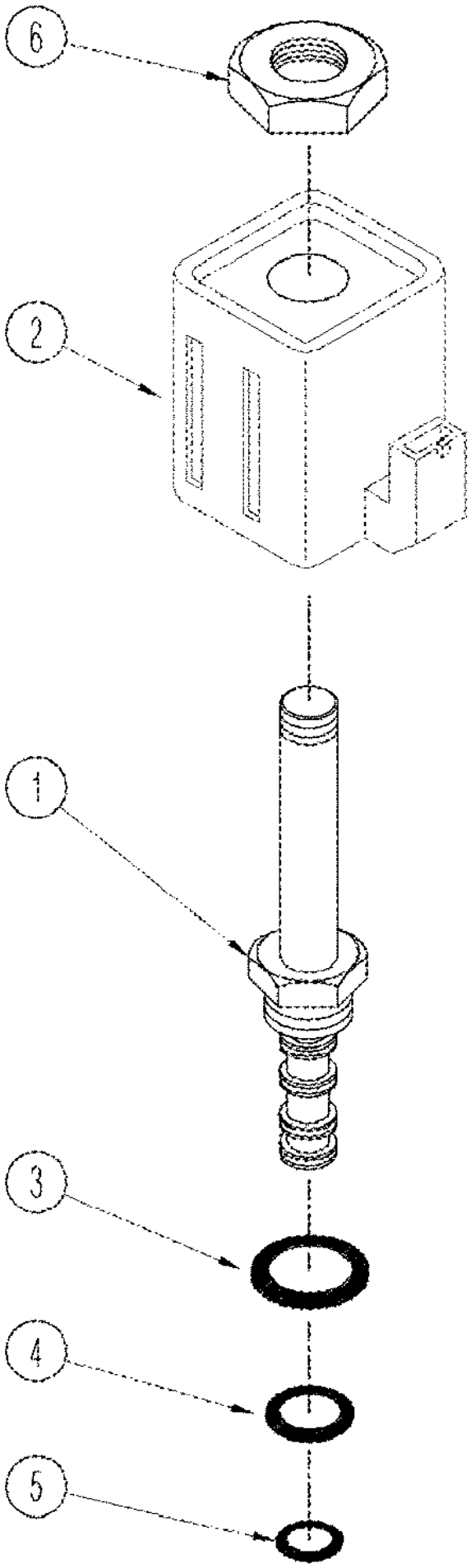

08 -51 VALVE ASSY - DIFFERENTIAL LOCK

ссылка	Номер детали	Кол-во	Описание
	384977A1	1	VALVE, Solenoid, Differential Lock, Inc. 1 - 6
1	384976A1	1	CARTRIDGE,
2	353941A1	1	COIL,
3	167269	1	O-RING, 10-1, 90 Duro, .755" ID x .097" Thk,
4	14453280	1	O-RING, -015, 70 Duro, .551" ID x .070" Thk,
5	130282	1	O-RING, -014, 70 Duro, .489" ID x .070" Thk,
6	NSS	1	NOT SERVICED SEPARATELY, Nut

08 -52 HYDRAULICS - FAN DRIVE CIRCUITRY (TJ425, TJ450, TJ500)

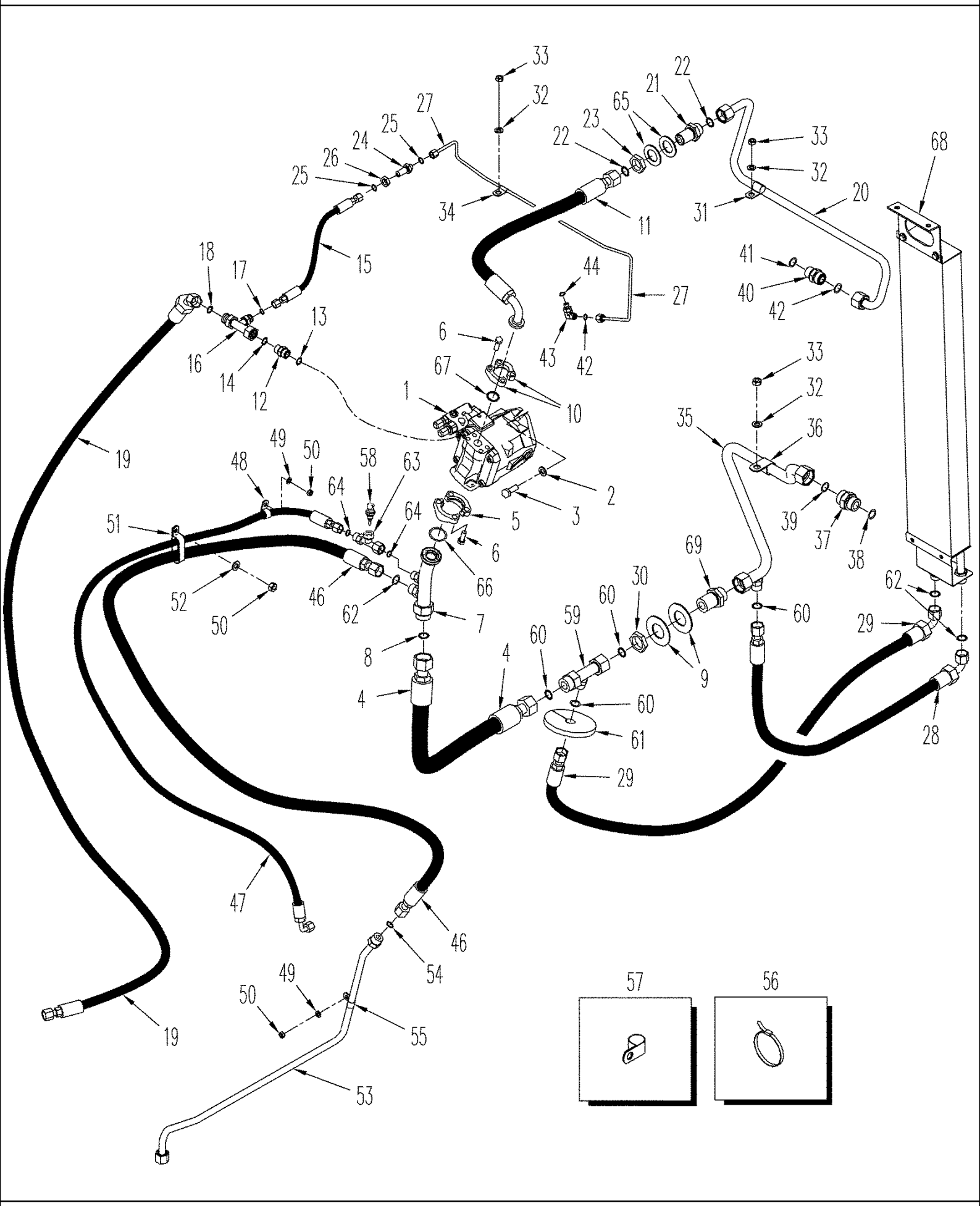

TJ375 TRACTOR - Hydraulic System

08 -52 HYDRAULICS - FAN DRIVE CIRCUITRY (TJ425, TJ450, TJ500)

ссылка	Номер детали	Кол-во	Описание
1	413152A1	1	PUMP, Hydraulic Fan Drive, See Figure(s) : 08-53
2	86625256	2	WASHER, M12 x 28.5 x 4, HT,
3	9824642	2	BOLT, Hex, M12 x 35, 10.9,
4	434126A1	1	HOSE ASSY., 686 mm (27 in)
5	A12301	2	FLANGE, Flange
6	9515003	8	BOLT, Hex, M10 x 30, 10.9, Full Thd,
7	434526A1	1	TUBE ASSY., Inc. 8, 9
8	9824050	1	O-RING, -021, 90 Duro, .926" ID x .070" Thk,
9	431802A1	2	WASHER,
10	A16961	2	FLANGE, Flange
11	430383A1	1	HOSE ASSY.,
12	9992305	1	CONNECTOR, HYD., 13/16"-16 ORFS x 3/4"-16 ORB, M12 or x 13/16 fc sl, Includes 13, 14
13	86642448	1	O-RING, Cl 6, 9.3MM ID x 2.2 Thk, 9.3 ID x 2.2
14	9992298	1	O-RING, -014, 90 Duro, .489" ID x .070" Thk,
15	414900A1	1	HOSE ASSY., 431 mm (17 in)
16	442615A1	1	TUBE ASSY., Special, 3/4 or x 1 fcsl x 12, Inc. 17, 18
17	9825770	1	O-RING, -011, 90 Duro, .301" ID x .070" Thk,
18	9992069	1	O-RING, -016, 90 Duro, .614" ID x .070" Thk,
19	430339A1	1	HOSE ASSY., 2622 mm (103 in)
20	429839A2	1	TUBE ASSY.,
21	86639064	1	UNION, 1 3/16"-12 ORFS, Blkd, 3/4 fcsl x blkhd, Inc. 22
23	86639062	1	NUT, LOCK, 1 3/16"-12, ORFS Blkhd, 3/4
24	86639059	1	UNION, 9/16"-18 ORFS, Blkd, 1/4 fcsl x blkhd, Inc. 25
25	9825770	2	O-RING, -011, 90 Duro, .301" ID x .070" Thk,
26	86639063	1	NUT, LOCK, 9/16"-18, ORFS Blkhd, Lock, 1/4
27	430313A1	1	TUBE ASSY., Drain
28	434121A1	1	HOSE ASSY., 540 mm (21 in)
29	434122A1	1	HOSE ASSY., 692 mm (27 in)
30	86639084	1	NUT, LOCK, 1 7/16"-12, ORFS Blkhd, Lock, 1
31	86598598	2	CLAMP, 3/4", Insul, 1/2" Bolt,
32	86624176	5	WASHER, M10 x 20 x 2, M10
33	86500689	5	NUT, M10, Cl 10, M10; 10
34	86639008	2	CLAMP, 1/4", Insul, 1/2" Bolt,
35	431929A2	1	TUBE ASSY.,
36	86625038	1	CLAMP, 1", Insul, 1/2" Bolt,
37	86580179	1	CONNECTOR, HYD., 1 7/16"-12 ORFS x M22 x 2 ORB, Includes 38, 39
38	86639046	1	O-RING, Cl 6, 29.6MM ID x 2.9 Thk, 29.6 ID x 2.9
39	9824050	1	O-RING, -021, 90 Duro, .926" ID x .070" Thk,
40	86579682	1	CONNECTOR, HYD., 1 3/16"-12 ORFS x M27 x 2 ORB, Includes 42, 43
41	86639045	1	O-RING, Cl 6, 23.6MM ID x 2.9 Thk, 23.6 ID x 2.9
42	9991976	1	O-RING, -018, 90 Duro, .739" ID x .070" Thk,
43	84431522	1	ELBOW, 90є, 9/16"-18 ORFS x M12 x 1.5 ORB, 90, M12 orb x 9/16 fcsl, Inc. 44, 45
44	86642448	1	O-RING, Cl 6, 9.3MM ID x 2.2 Thk, 9.3 ID x 2.2
45	9825770	1	O-RING, -011, 90 Duro, .301" ID x .070" Thk,
46	414898A1	1	HOSE ASSY., 1727 mm (68 in)

08 -52 HYDRAULICS - FAN DRIVE CIRCUITRY (TJ425, TJ450, TJ500)

ссылка	Номер детали	Кол-во	Описание
47	434252A2	1	HOSE ASSY., 2159 mm (85 in)
48	86624005	6	CLAMP, 3/4", Insul, 3/8" Bolt,
49	86624184	7	WASHER, M8 x 16 x 1.6, 9 x 16 x 1.6 mm
50	43362	9	NUT, M8, Cl 10,
51	R54363	2	CLAMP, Double
52	86625263	2	WASHER, M8 x 20 x 1.6,
53	414902A1	1	TUBE ASSY., Inc. 54
54	9992069	1	O-RING, -016, 90 Duro, .614" ID x .070" Thk,
55	86594406	1	CLAMP, 5/8", Insul, 3/8" Bolt,
56	435437A1	1	STRAP, CABLE, Cable
57	86637979	1	CLAMP, 13/16", Insul, 3/8" Bolt, 20.6 mm
57	86637977	1	CLAMP, 1", Insul, 5/16" Bolt, 25.4 mm
58	J865346	1	SENSOR, Temperature
59	433891A1	1	TUBE ASSY., Inc. 60
60	9824050	2	O-RING, -021, 90 Duro, .926" ID x .070" Thk,
61	434257A1	1	SEAL,
62	9992069	3	O-RING, -016, 90 Duro, .614" ID x .070" Thk,
63	434243A1	1	TUBE ASSY., Inc. 64
64	9992298	2	O-RING, -014, 90 Duro, .489" ID x .070" Thk,
65	431806A1	2	WASHER,
66	14464080	1	O-RING, -222, 70 Duro, 1.484" ID x .139" Thk,
67	86629540	1	O-RING, -214, 70 Duro, .984" ID x .139" Thk,
68	433671A2	1	COOLER,
69	434004A1	1	VALVE, CHECK,
22	9993141	2	O-RING, -012, 90 Duro, .364" ID x .070" Thk,

08 -54 HYDRAULIC FAN OIL COOLER - MOUNTING

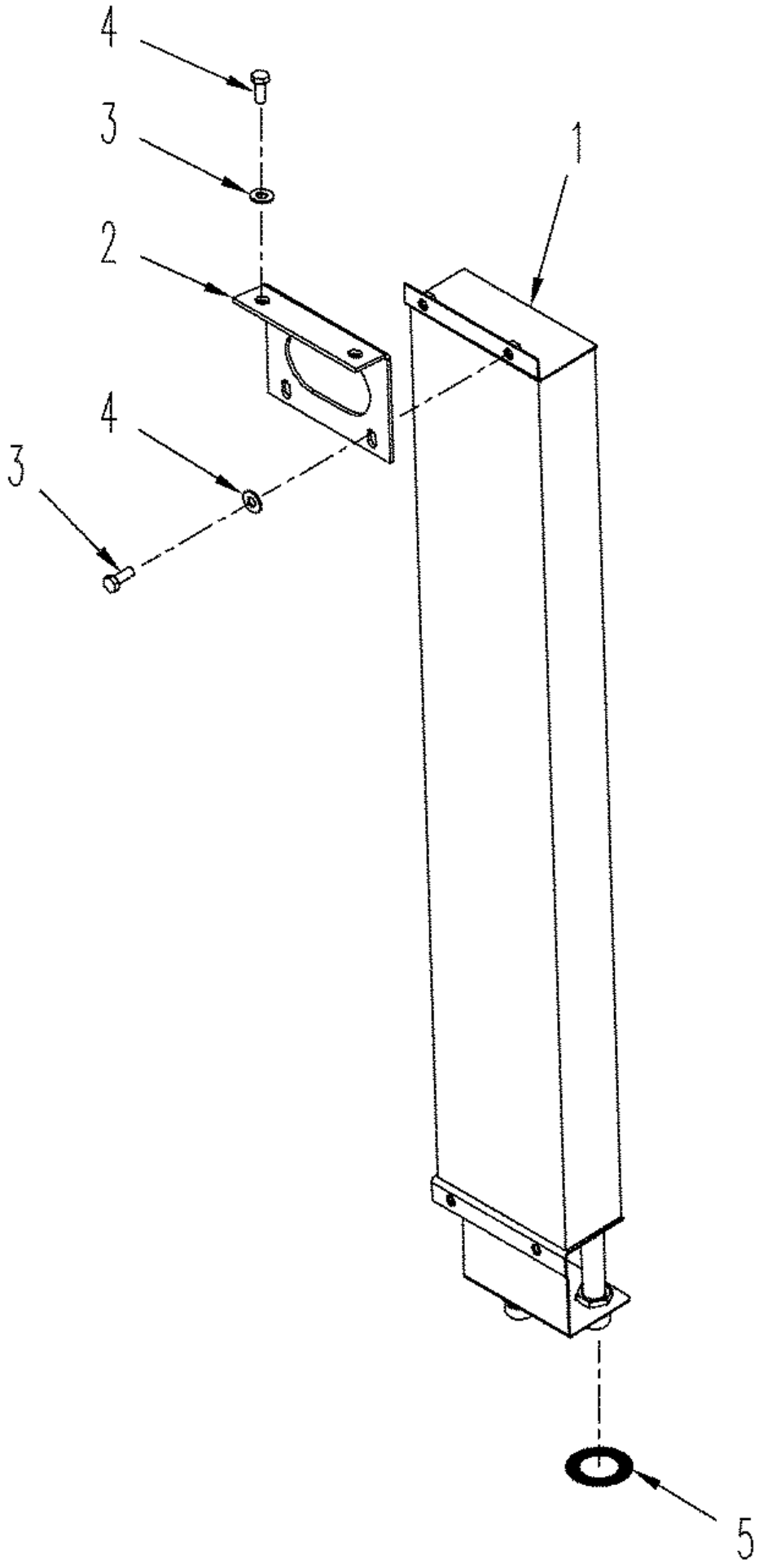

TJ375 TRACTOR - Hydraulic System

08 -54 HYDRAULIC FAN OIL COOLER - MOUNTING

ссылка	Номер детали	Кол-во	Описание
1	433671A2	1	COOLER,
2	433731A1	1	SUPPORT, Mounting
3	43233	6	BOLT, Hex, M8 x 20, 10.9, Cap, HH, CL 10.9, M8 x 1.25 x 20
4	86625263	6	WASHER, M8 x 20 x 1.6,
5	9992069	2	O-RING, -016, 90 Duro, .614" ID x .070" Thk,

TJ375 TRACTOR - Hydraulic System

08 -55 HYDRAULICS - MEGA FLOW CIRCUITRY

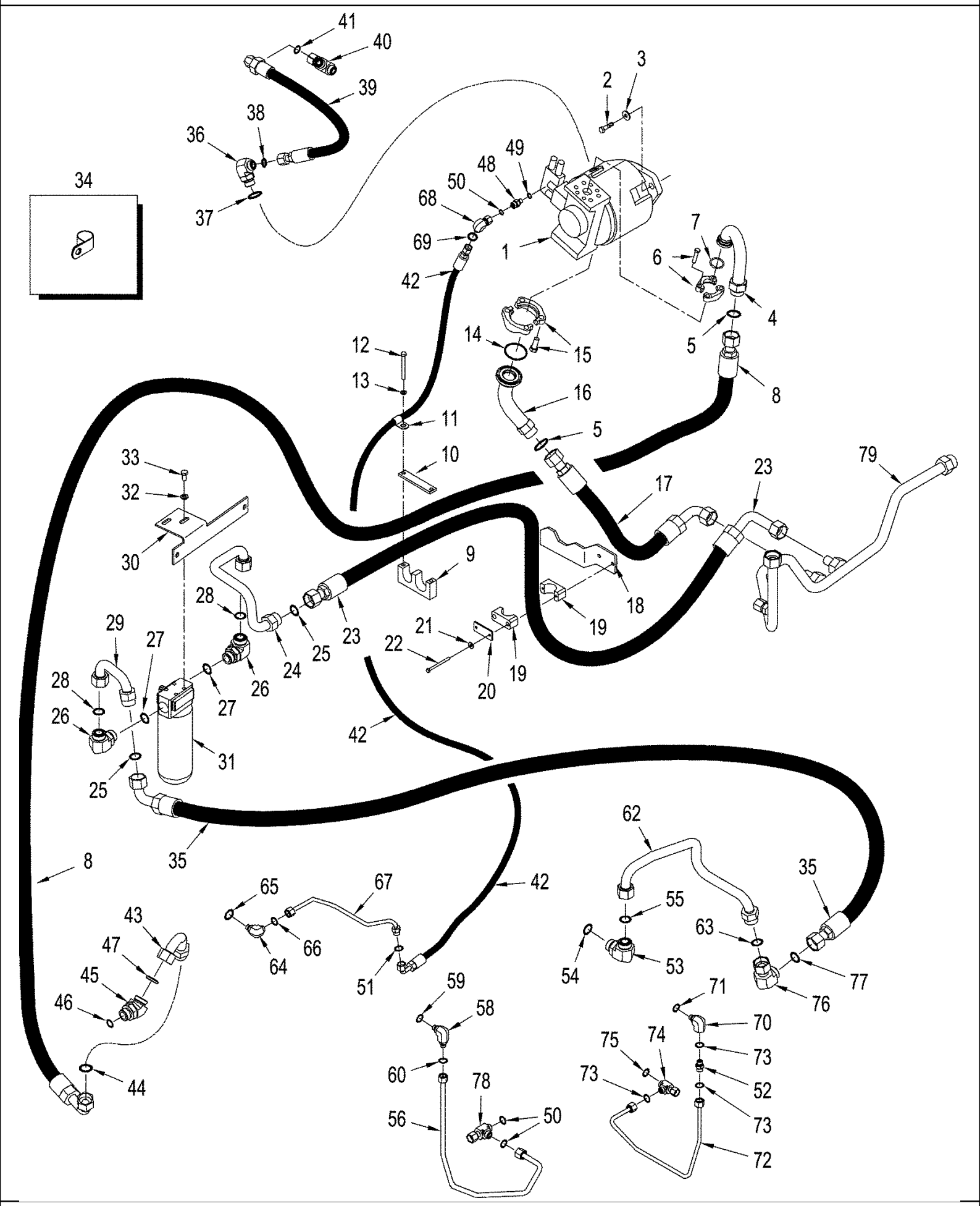

TJ375 TRACTOR - Hydraulic System

08 -55 HYDRAULICS - MEGA FLOW CIRCUITRY

ссылка	Номер детали	Кол-во	Описание
1	407476A1	1	PUMP, HYDRAULIC, See Figure(s) : 08-59
2	86900235	2	BOLT, Hex, M16 x 55, 10.9, Full Thd, Hex, M16 x 55, 10.9, Full Thd, With Manual Shift Transmission
2	86508624	2	BOLT, Hex, M16 x 45, 10.9, , With Power Shift Transmission
3	86625266	2	WASHER, M17.5 x 30 x 4, HT,
4	414663A1	1	TUBE,
5	9824050	1	O-RING, -021, 90 Duro, .926" ID x .070" Thk,
6	A12306	2	FLANGE, Split, 1
7	86529541	1	O-RING, -219, 90 Duro, 1.296" ID x .139" Thk, 90 Duro, 1.296" ID x .139" Thk
8	414465A2	1	HOSE, 113-1/2" Lg
9	414429A2	1	CLAMP BRACKET,
10	414856A1	1	PLATE,
11	86639005	1	CLAMP, 5/8", Insul, 1/2" Bolt, 15.9 mm
12	379748	2	BOLT, Hex, M8 x 80, 10.9, M8 x 80; 10.9
13	86624184	2	WASHER, M8 x 16 x 1.6, 9 x 16 x 1.6 mm
14	86637769	1	O-RING, -228, 90 Duro, 2.234" ID x .139" Thk,
15	A14141	2	FLANGE, Split, 2
16	414077A1	1	TUBE,
17	414196A1	1	HOSE, 825 mm (32 in)
18	433047A2	1	BRACKET,
19	429384A1	2	CLAMP,
20	429414A1	1	PLATE, COVER,
21	86624182	2	WASHER, M6 x 18 x 1.6,
22	43228	2	BOLT, Hex, M6 x 80, 10.9, Cap, HH, CL 8.8, M6 x 1 x 80
23	414464A1	1	HOSE, 1626 mm (64 in)
24	419661A1	1	TUBE,
25	9824050	1	O-RING, -021, 90 Duro, .926" ID x .070" Thk,
26	86580180	3	ELBOW, 90є, 1 7/16"-12 ORFS x M33 x 2 ORB, Includes 27, 28
27	86639046	1	O-RING, Cl 6, 29.6MM ID x 2.9 Thk, 29.6 ID x 2.9
28	9824050	1	O-RING, -021, 90 Duro, .926" ID x .070" Thk,
29	419655A1	1	TUBE,
30	417856A2	1	BRACKET, Filter
31	414219A1	6	FILTER,
32	86624176	4	WASHER, M10 x 20 x 2, M10
33	9861444	2	BOLT, Hex, M10 x 20, 10.9, Full Thd, M10 x 20; 10.9
34	9827902	1	CLAMP, 1", Insul, 3/8" Bolt,
34	86639003	1	CLAMP, 3/8", Insul, 7/16" Bolt, 9.5 mm
35	414854A1	1	HOSE, 1956 mm (77 in)
36	86637669	1	ELBOW, 90є, 1"-14 x 1 1/16"-12, Adj, ORFS, 90, 3/4 orb x 5/8 fc sl, Inc. 37, 38
37	167266	1	O-RING, 12-1, 90 Duro, .924 ID x .116" Thk,
38	9992069	1	O-RING, -016, 90 Duro, .614" ID x .070" Thk,
39	431461A1	1	HOSE ASSY., 737 mm (29 in)
40	86642450	1	TEE, 1"-14 ORFS x 1"-14 Fem Sw Run, M16 fc sl x swl, Inc. 41
41	9992069	1	O-RING, -016, 90 Duro, .614" ID x .070" Thk,
42	414855A1	1	HOSE, 2870 mm (113 in)
43	429941A2	1	TUBE,

08 -55 HYDRAULICS - MEGA FLOW CIRCUITRY

ссылка	Номер детали	Кол-во	Описание
44	9824050	1	O-RING, -021, 90 Duro, .926" ID x .070" Thk,
45	86639054	1	ELBOW, 45є, 1 7/16"-12 ORFS x M33 x 2 ORB, 45, M33 orb x 1-7/16 fc sl, Inc. 46, 47
46	86639046	1	O-RING, Cl 6, 29.6MM ID x 2.9 Thk, 29.6 ID x 2.9
47	9824050	1	O-RING, -021, 90 Duro, .926" ID x .070" Thk,
48	1957867C1	1	SCREEN, FILTER, 1/4 orb x 3/8 fc sl, Inc. 49, 50
49	165202	1	O-RING, 4-1, 90 Duro, .351" ID x .072" Thk,
52	334923A1	1	SCREEN,
53	86580180	3	ELBOW, 90є, 1 7/16"-12 ORFS x M33 x 2 ORB, Includes 54, 55
54	86639046	1	O-RING, Cl 6, 29.6MM ID x 2.9 Thk, 29.6 ID x 2.9
55	9824050	1	O-RING, -021, 90 Duro, .926" ID x .070" Thk,
56	445701A1	1	TUBE, HYD,
57	9992298	1	O-RING, -014, 90 Duro, .489" ID x .070" Thk,
58	86579689	1	ELBOW, 90є, 13/16"-18 ORFS x M14 x 1.5 ORB, 90, M14 orb x 12 fc sl, Includes 59, 60
59	86639042	1	O-RING, Cl 6, 11.3MM ID x 2.2 Thk, 11.3 ID x 2.2
60	9992298	1	O-RING, -014, 90 Duro, .489" ID x .070" Thk,
61	84989413	1	ELBOW, 90є, 1 7/16"-12 ORFS x 1 7/16"-12 Fem Sw, 90
62	419684A1	1	TUBE,
63	9824050	1	O-RING, -021, 90 Duro, .926" ID x .070" Thk,
64	86579686	1	ELBOW, 90є, 11/16"-18 ORFS x M14 x 1.5 ORB, 90, M14 orb x 11/16 fc sl, Inc. 65, 66
65	86639042	1	O-RING, Cl 6, 11.3MM ID x 2.2 Thk, 11.3 ID x 2.2
66	9824050	1	O-RING, -021, 90 Duro, .926" ID x .070" Thk,
67	429943A2	1	TUBE,
68	84989392	1	ELBOW, 90є, 11/16"-16 ORFS x 11/16"-16 Fem Sw, 90, 3/8 fc sl, Inc. 69
70	428078A1	1	ELBOW, 90, M14 orb, Inc. 71
71	86639042	1	O-RING, Cl 6, 11.3MM ID x 2.2 Thk, 11.3 ID x 2.2
72	430536A1	1	TUBE,
74	9843615	1	TEE, 11/16"-16 ORFS x 11/16"-16 Fem Sw Run, 3/8 fc sl x swl, Inc. 75
76	84989413	1	ELBOW, 90є, 1 7/16"-12 ORFS x 1 7/16"-12 Fem Sw, 90, 1 fc sl x swl, Inc. 77
77	9824050	1	O-RING, -021, 90 Duro, .926" ID x .070" Thk,
78	86514261	1	TEE, 13/16"-16 ORFS x 13/16"-16 Fem Sw Run, 1/2" fc sl x swl, Inc. 50
79	418816A2	1	TUBE ASSY.,
50	9993141	2	O-RING, -012, 90 Duro, .364" ID x .070" Thk,
51	9993141	1	O-RING, -012, 90 Duro, .364" ID x .070" Thk,
69	9993141	1	O-RING, -012, 90 Duro, .364" ID x .070" Thk,
73	9993141	2	O-RING, -012, 90 Duro, .364" ID x .070" Thk,
75	9993141	2	O-RING, -012, 90 Duro, .364" ID x .070" Thk,

08 -56 MEGA FLOW HYDRAULICS - AUXILIARY REMOTE MOUNTING

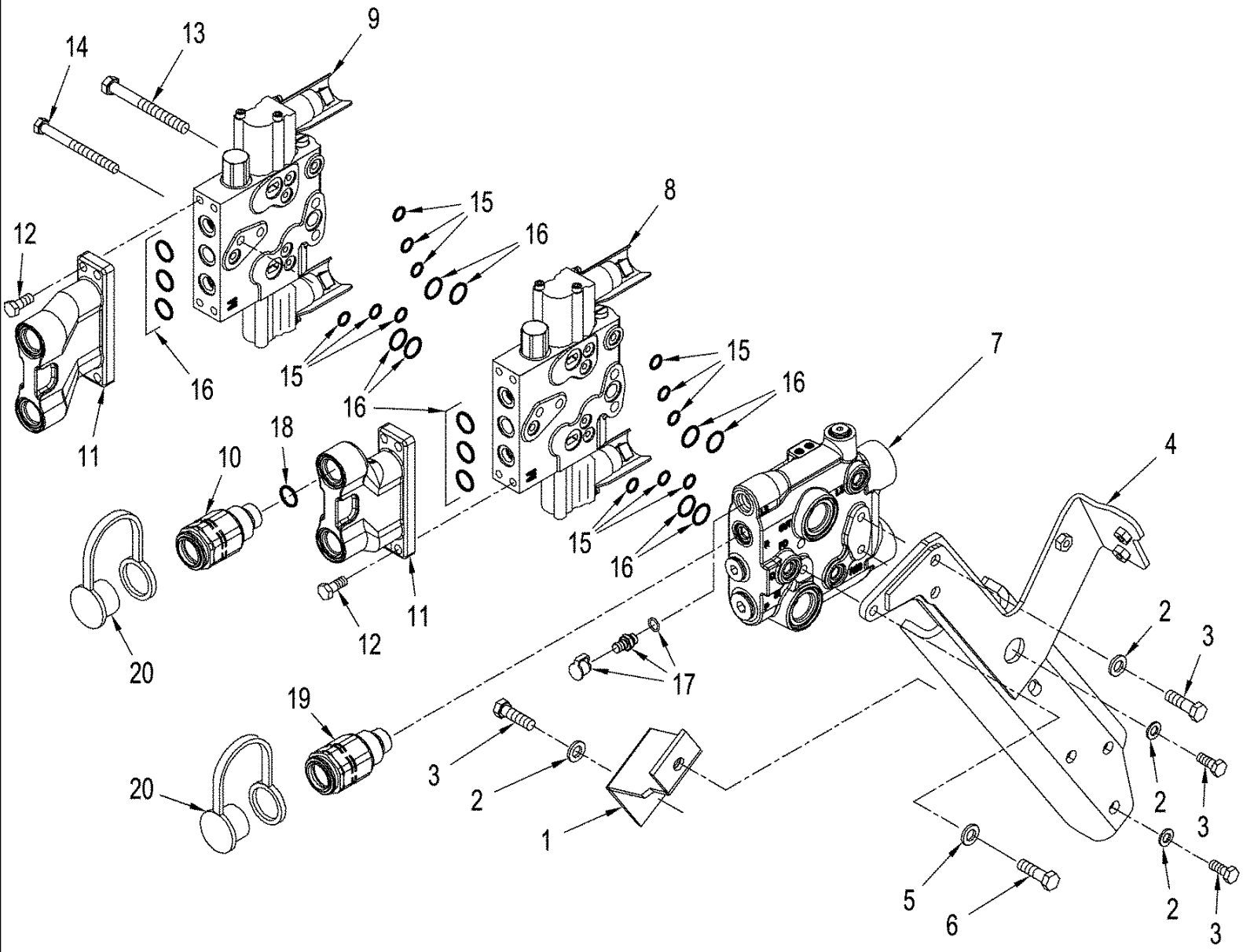

08 -56 MEGA FLOW HYDRAULICS - AUXILIARY REMOTE MOUNTING

ссылка	Номер детали	Кол-во	Описание
1	429731A1	1	GUSSET, Support
2	86625255	5	WASHER, M13.5 x 24.5 x 3, HT,
3	337563	5	BOLT, Hex, M12 x 40, 10.9, Full Thd, Cap, HH, CL 10.9, M12 x 1.75 x 40
4	429730A2	1	BRACKET, Mounting
5	86624176	1	WASHER, M10 x 20 x 2, M10
6	398792	1	BOLT, Hex, M12 x 25, 10.9, Cap, HH, CL 10.9, M12 x 1.75 x 25
	411978A4	1	VALVE, HYDRAULIC, Two Section, Inc. 7 - 16
7	418456A4	1	MANIFOLD, Inlet / Outlet, See Figure (s) : 08-54
8	393973A2	1	VALVE, Auxilary, Right-Hand, See Figure (s) : 08-43
9	292295A3	1	VALVE, Auxilary, Main, See Figure (s) : 08-43
	418704A2	2	COUPLING, Inc. 10, 11
10	440646A1	2	COUPLING, BREAK AWAY,
11	418705A1	1	COUPLING,
12	9846677	8	BOLT, Hex, M10 x 25, 10.9, Full Thd, Cap, HH, CL 10.9, M10 x 1.5 x 25
13	9501756	2	BOLT, Hex, M12 x 110, 10.9,
14	86556139	1	BOLT, Hex, M10 x 110, 10.9, M10 x 110; 10.9
15	272344	12	O-RING, -112, 90 Duro, .487" ID x .103" Thk,
16	277634	12	O-RING, -117, 90 Duro, .799" ID x .103" Thk, 90 Duro, .799" ID x .103" Thk
17	358968A1	1	COUPLING, Diagnostic
18	86598103	1	O-RING, Cl 6, 23.6MM ID x 2.9 Thk, 23,6 ID x 2,9 Thk; 6
19	298291A1	1	BODY, Coupler, Auxiliary, 3/4"
20	334216A1	5	CAP, Dust

08 -58 MEGA FLOW HYDRAULIC MANFOLD ASSY

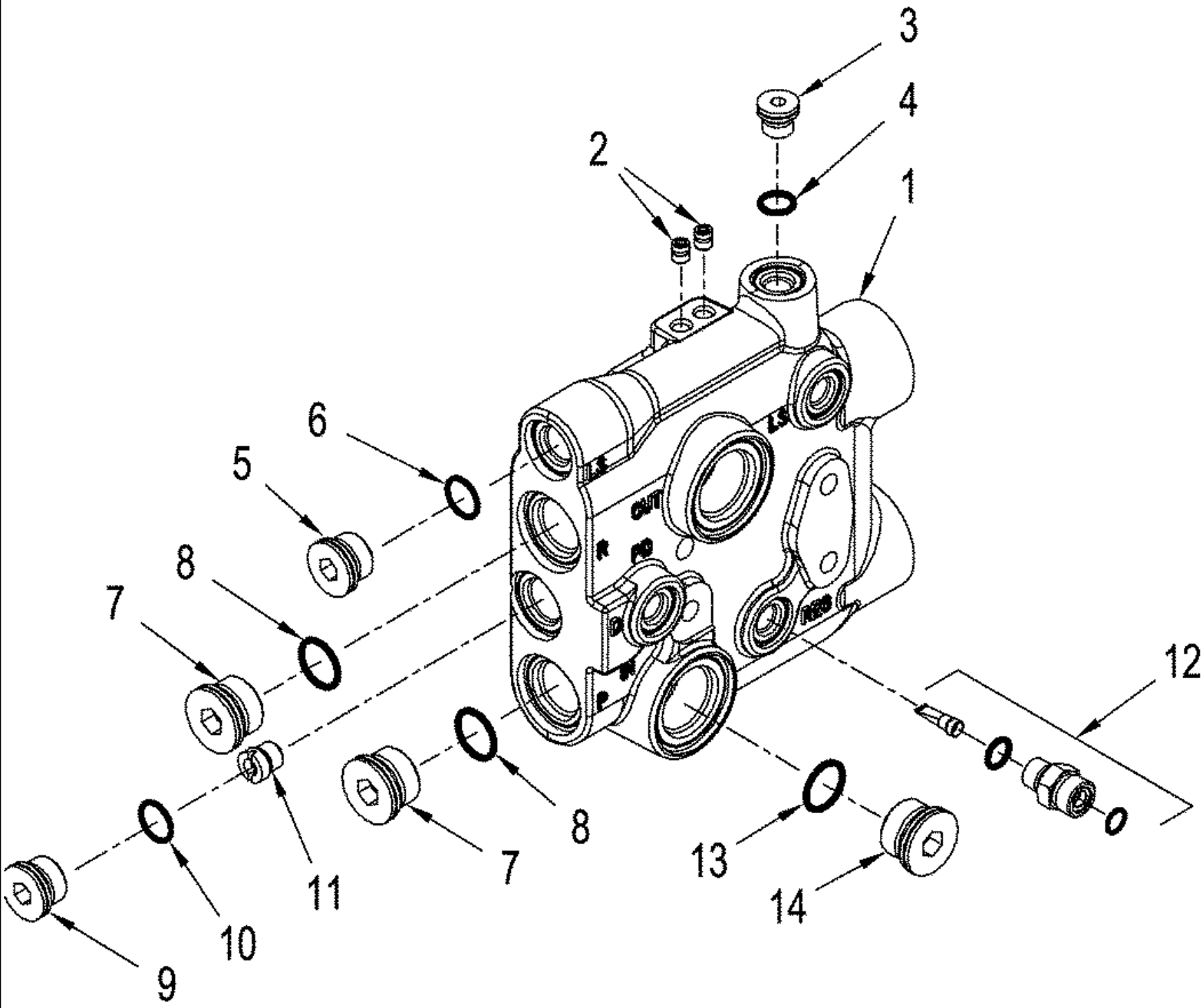

TJ375 TRACTOR - Hydraulic System

08 -58 MEGA FLOW HYDRAULIC MANFOLD ASSY

ссылка	Номер детали	Кол-во	Описание
	418456A4	1	MANIFOLD, Inlet / Outlet, Inc. 1 - 12
1	NSS	1	NOT SERVICED SEPARATELY, Body
2	353828A1	2	PLUG, Expansion
3	221576A1	1	PLUG, Hex Soc, M14 x 1.5, ORB, Includes 4
4	86639042	1	O-RING, Cl 6, 11.3MM ID x 2.2 Thk, 11,3 ID x 2,2
5	221578A1	1	PLUG, Hex Soc, M18 x 1.5, ORB, Includes 6
6	86639043	1	O-RING, 15,3 ID x 2,2
7	221580A1	2	PLUG, Hex Soc, M27 x 2, ORB, Includes 8
8	86639045	1	O-RING, Cl 6, 23.6MM ID x 2.9 Thk, 23,6 ID x 2,9
9	221579A1	1	PLUG, Hex Soc, M22 x 1.5, ORB, Includes 10
10	86639044	1	O-RING, Cl 6, 19.3MM ID x 2.2 Thk, 19,3 ID x 2,2
11	431479A1	1	VALVE, CHECK,
12	334923A1	1	SCREEN,
13	221527A1	2	PLUG, Hex Soc, M33 x 2, ORB, Soc Hd, M33 or x 2, Inc. 14
14	86639046	1	O-RING, Cl 6, 29.6MM ID x 2.9 Thk, 29.6 ID x 2.9 Thk

08 -59 MEGA FLOW HYDRAULIC PUMP ASSY

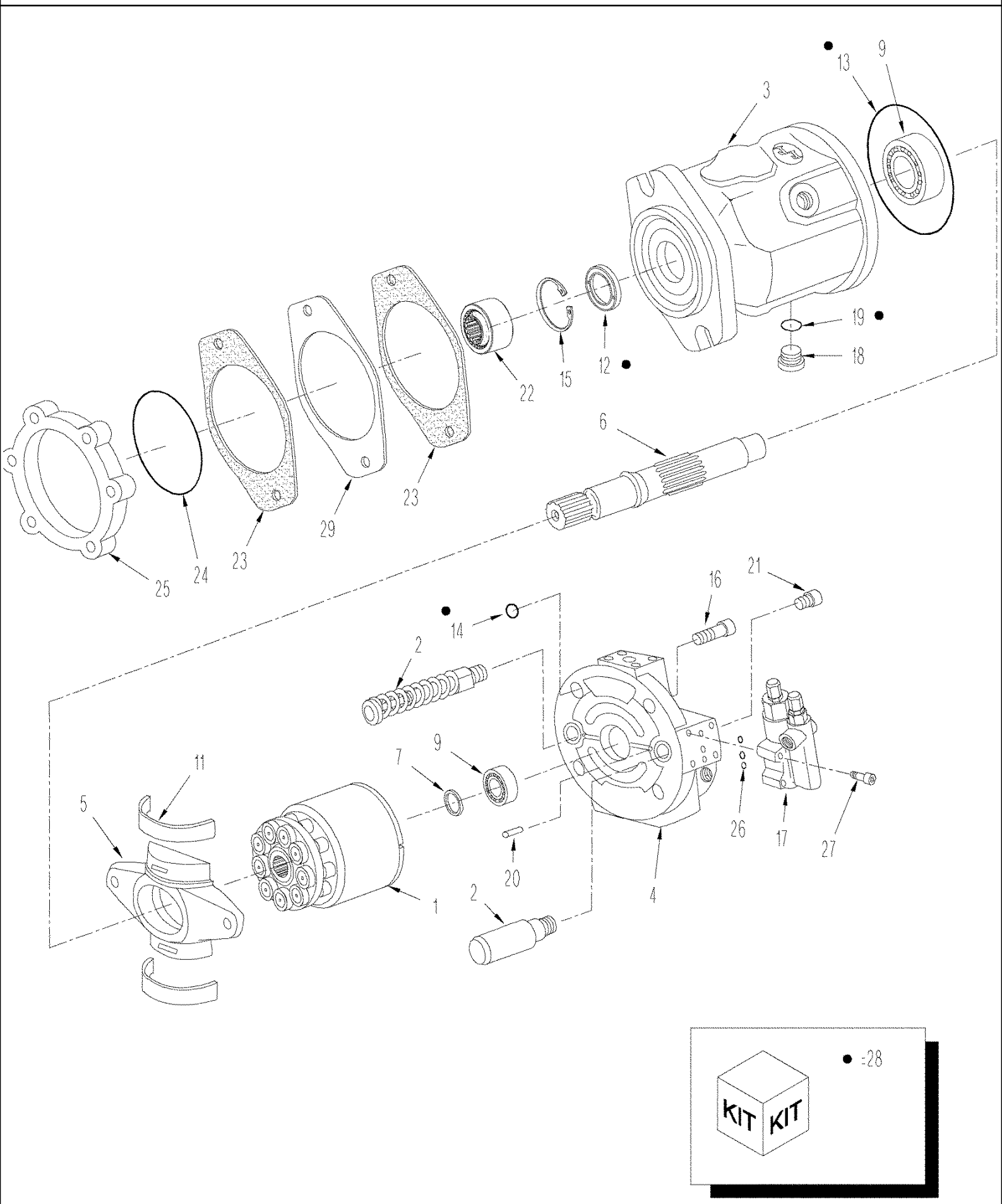

TJ375 TRACTOR - Hydraulic System

08 -59 MEGA FLOW HYDRAULIC PUMP ASSY

ссылка	Номер детали	Кол-во	Описание
	407476A1	1	PUMP, HYDRAULIC, Inc. 1 - 22
1	NSS	1	NOT SERVICED SEPARATELY, Cylinder Assy
2	NSS	1	NOT SERVICED SEPARATELY, Piston Assy, Control
3	NSS	1	NOT SERVICED SEPARATELY, Housing
4	NSS	1	NOT SERVICED SEPARATELY, Block
5	NSS	1	NOT SERVICED SEPARATELY, Plate, Swash
6	NSS	1	NOT SERVICED SEPARATELY, Shaft
7	NSS	1	NOT SERVICED SEPARATELY, Washer
8	NSS	1	NOT SERVICED SEPARATELY, Spacer
9	NSS	1	NOT SERVICED SEPARATELY, Bearing, Roller
10	NSS	1	NOT SERVICED SEPARATELY, Bearing, Roller
11	NSS	2	NOT SERVICED SEPARATELY, Support
12	NSS	1	NOT SERVICED SEPARATELY, Seal
13	NSS	1	NOT SERVICED SEPARATELY, O-Ring
14	NSS	4	NOT SERVICED SEPARATELY, O-Ring
15	NSS	1	NOT SERVICED SEPARATELY, Ring, Snap
16	NSS	4	NOT SERVICED SEPARATELY, Screw
17	352875A2	1	VALVE, CONTROL,
18	NSS	1	NOT SERVICED SEPARATELY, Plug
19	NSS	1	NOT SERVICED SEPARATELY, O-Ring
20	NSS	1	NOT SERVICED SEPARATELY, Pin
21	NSS	2	NOT SERVICED SEPARATELY, Screw
22	430337A1	1	COUPLING, , With Manual Shift Transmission
22	432675A1	1	COUPLING, , With Power Shift Transmission
23	D53692	2	GASKET, , With Power Shift Transmission
24	86012300	1	O-RING, -256, 70 Duro, 5.734" ID x .139" Thk, , With Manual Shift Transmission
25	414192A1	1	FLANGE, Adapter, With Manual Shift Transmission
26	410995A1	3	O-RING, Control Valve
27	412596A1	4	SCREW,
28	388293A1	1	KIT, SEALS,
29	86991869	1	SPACER, , With Power Shift Transmission

08 -60 OIL FILTER - MEGA FLOW HYDRAULICS

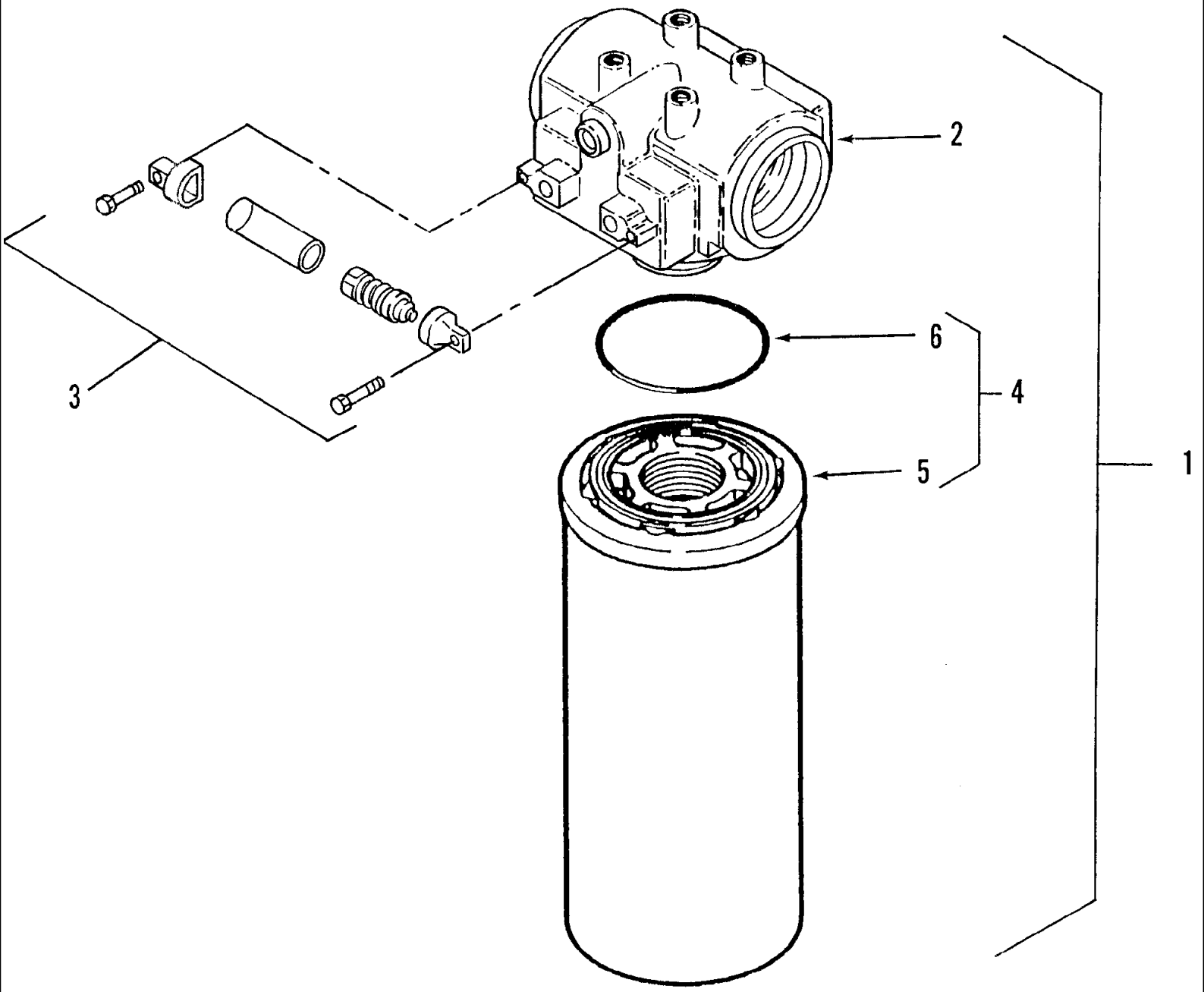

TJ375 TRACTOR - Hydraulic System

08 -60 OIL FILTER - MEGA FLOW HYDRAULICS

ссылка	Номер детали	Кол-во	Описание
1	414219A1	1	FILTER, Inc. 2 - 6
2	NSS	1	NOT SERVICED SEPARATELY, Head
3	440086A1	1	INDICATOR, Restriction
4	86989735	1	FILTER, HYDRAULIC OIL, Inc. 5 - 6
5	NSS	1	NOT SERVICED SEPARATELY, Element
6	NSS	1	NOT SERVICED SEPARATELY, O-Ring

09 -01 THREE POINT HITCH

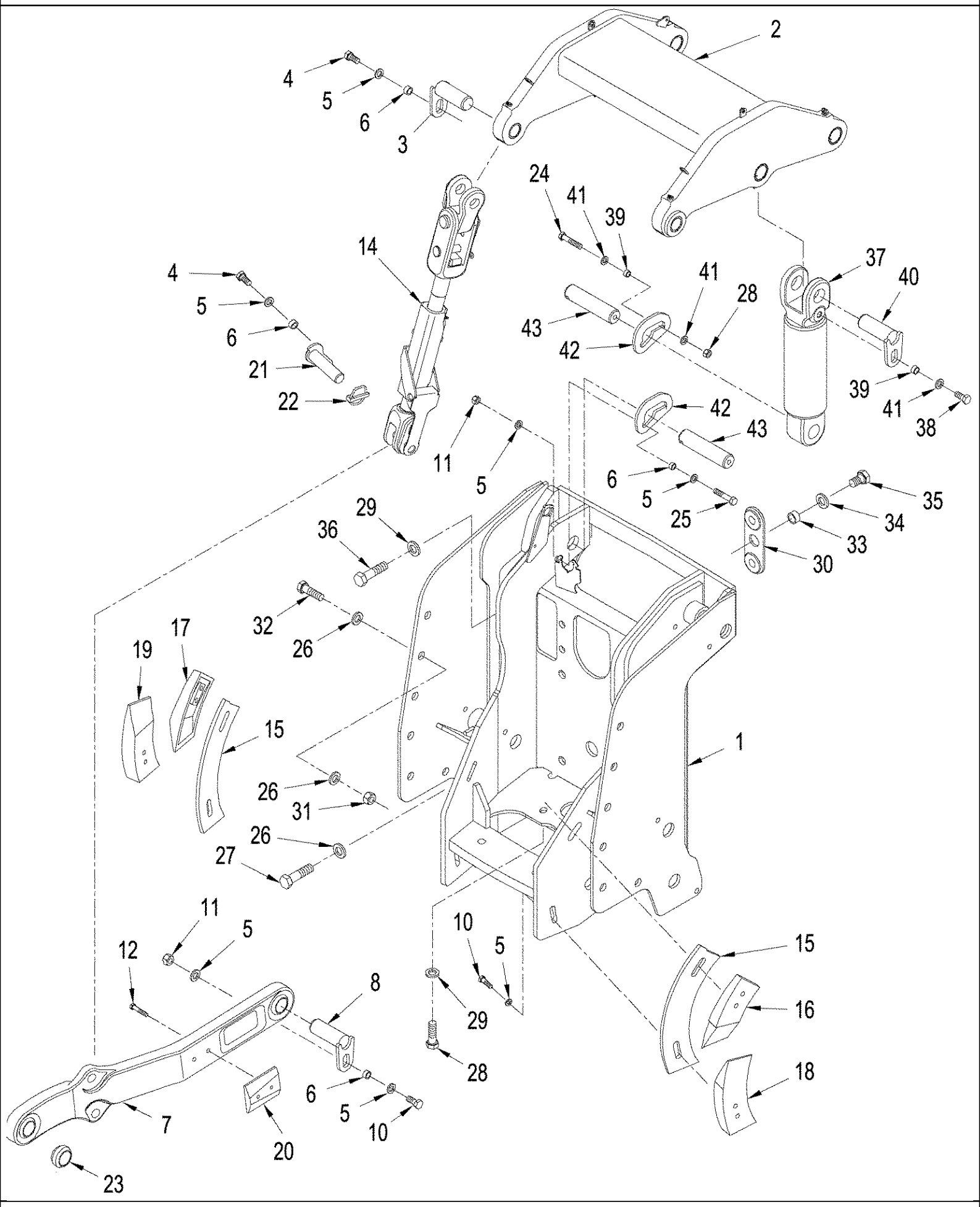

09 -01 THREE POINT HITCH

ссылка	Номер детали	Кол-во	Описание
1	403741A1	1	MOUNTING PARTS,
2	403743A1	1	ROCKSHAFT, See Figure(s) : 09-02
3	435504A1	2	PIN,
4	86529976	4	BOLT, Hex, M16 x 35, 10.9, M6 x 35; 10.9
5	86625266	20	WASHER, M17.5 x 30 x 4, HT,
6	435501A1	8	SPACER,
7	403717A1	2	ARM, Draft
8	347641A1	1	PIN, LH
9	348061A1	1	PIN, RH, Not Illustrated
10	86639033	10	BOLT, Hex, M16 x 60, 10.9, Full Thd, M16 x 60; 10.9
11	392530	4	NUT, M16, Cl 10,
12	86624980	4	BOLT, Hex, M12 x 65, 10.9, M12 x 65; 10.9
13	NSS	1	NOT SERVICED SEPARATELY, Link Assy, Lift, RH, Not Illustrated, Order Component Parts, See Figure (s) : 09-05
14	NSS	1	NOT SERVICED SEPARATELY, Link Assy, Lift, LH, Order Component Parts, See Figure(s) : 09-05
15	403735A1	2	PLATE,
16	403744A1	1	BLOCK ASSY.,
17	403745A1	1	BLOCK ASSY.,
18	403746A1	1	BLOCK ASSY.,
19	403747A1	1	BLOCK ASSY.,
20	403748A1	2	BLOCK ASSY., Wear
21	322096A1	2	PIN,
22	A30338	2	PIN,
23	275912A1	2	BALL,
24	9828248	2	BOLT, Hex, M16 x 60, 10.9,
25	86577946	2	BOLT, Hex, M16 x 80, 10.9, Hex, M16 x 80, 10.9
26	86639319	28	WASHER, 26 x 44 x 5 mm
27	9780064	4	BOLT, Hex, M24 x 110, 10.9, Cap, HH, CL 10.9, M24 x 3 x 110
28	392530	2	NUT, M16, Cl 10,
29	86625260	6	WASHER, M20 x 37.5 x 4, HT, 22 x 37 x 4 mm
30	259389A1	2	PLATE,
31	9848973	12	NUT, M24, Cl 10, CL 10, M24 x 3.0
32	86639036	12	BOLT, Hex, M24 x 60, 10.9, Full Thd, M24 x 60; 10.9
33	9847024	2	NUT, M20, Cl 10,
34	86625266	2	WASHER, M17.5 x 30 x 4, HT,
35	86639032	2	BOLT, Hex, M16 x 25, 10.9, Full Thd, Hex, M16 x 25, 10.9, Full Thd
36	9843590	4	BOLT, Hex, M20 x 50, 10.9,
37	403206A1	2	CYLINDER ASSY., Lift, See Figure(s) : 08-50
38	86529976	2	BOLT, Hex, M16 x 35, 10.9, M6 x 35; 10.9
39	435501A1	4	SPACER,
40	435503A1	2	PIN,
41	86625266	6	WASHER, M17.5 x 30 x 4, HT,
42	403204A1	2	PLATE, Retainer
43	321188A2	2	PIN,

09 -02 ROCKSHAFT

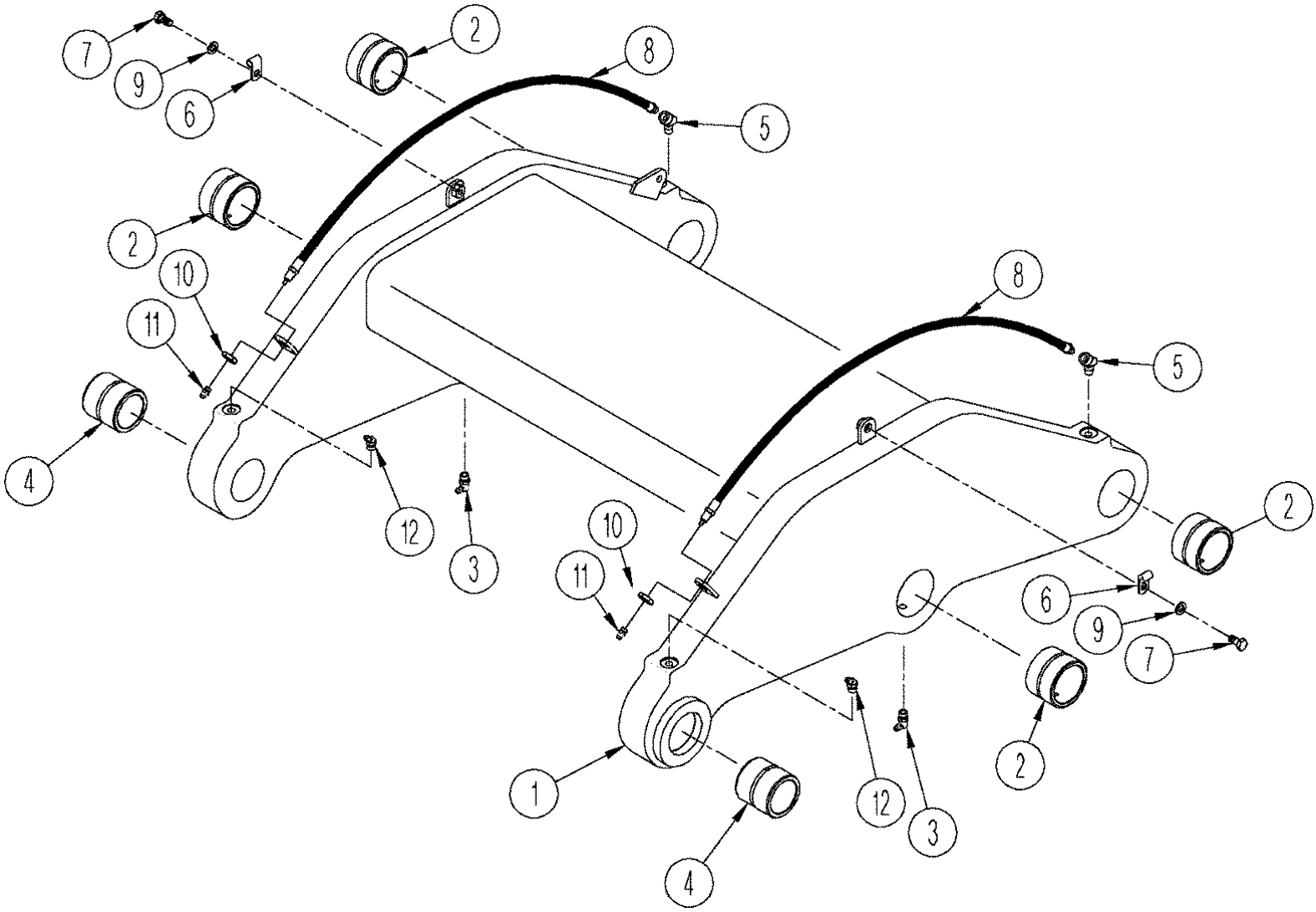

TJ375 TRACTOR - Chassis/Attachments

09 -02 ROCKSHAFT

ссылка	Номер детали	Кол-во	Описание
	403743A1	1	ROCKSHAFT, Inc. 1 - 5, 12
1	NSS	1	NOT SERVICED SEPARATELY, Rockshaft
2	435500A1	4	BUSHING,
3	80719	2	NIPPLE, LUBE, 90є, 1/8" NPT x .84" lg,
4	328586A2	2	BUSHING,
5	612715	2	ELBOW, 45°, 1/8 PT x Fem PT
6	853764	2	CLAMP, 5/16", Insul, 5/16" Bolt,
7	43232	2	SCREW, M8 x 16; 10.9
8	1339231C1	2	HOSE, 737 mm (29 in), Grease
9	86624184	2	WASHER, M8 x 16 x 1.6, 9 x 17 x 1.6 mm
10	F53473	2	NUT, Special, 1/8 PT
11	87414	2	NIPPLE, LUBE, 1/4"-28 x .56" lg, Drive,
12	80717	2	NIPPLE, LUBE, 45є, 1/8" NPT x 7/8" lg, 45 deg, 1/8 PT x 7/8

09 -03(1) THREE POINT HITCH - UPPER LINK, WITH POWER TAKEOFF

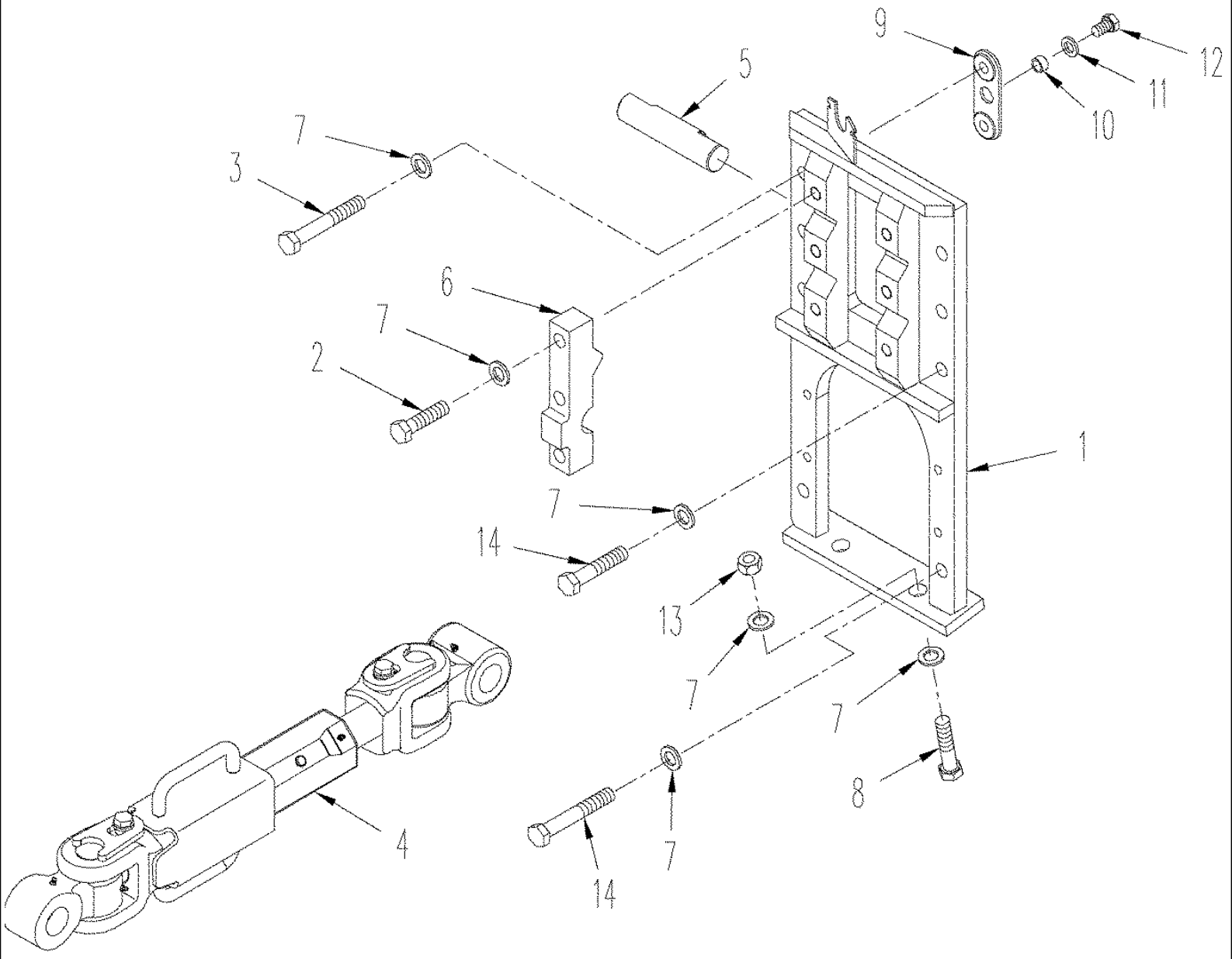

09 -03(1) THREE POINT HITCH - UPPER LINK, WITH POWER TAKEOFF

ссылка	Номер детали	Кол-во	Описание
1	403738A1	1	BRACKET,
2	9846949	6	BOLT, Hex, M20 x 80, 10.9, Cap, HH, CL 10.9, M20 x 2.5 x 80
3	86624994	8	BOLT, Hex, M20 x 230, 10.9, M20 x 230; 10.9
4	NSS	1	NOT SERVICED SEPARATELY, Link, Upper, Order Component Parts, See Figure(s) : 09-04
5	309663A1	1	PIN,
6	403737A1	2	CLAMP,
7	86625260	16	WASHER, M20 x 37.5 x 4, HT, 22 x 37 x 4 mm
8	9846950	2	BOLT, Hex, M20 x 90, 10.9, Cap, HH, CL 10.9, M20 x 2.5 x 90
9	259389A1	2	PLATE,
10	435501A1	4	SPACER,
11	86625266	4	WASHER, M17.5 x 30 x 4, HT,
12	86639032	4	BOLT, Hex, M16 x 25, 10.9, Full Thd, Hex, M16 x 25, 10.9, Full Thd
13	9847024	2	NUT, M20, Cl 10,
14	86639169	4	BOLT, Hex, M20 x 270, 10.9, M20 x 270; 10.9

09 -03(2) THREE POINT HITCH - UPPER LINK, WITHOUT POWER TAKEOFF

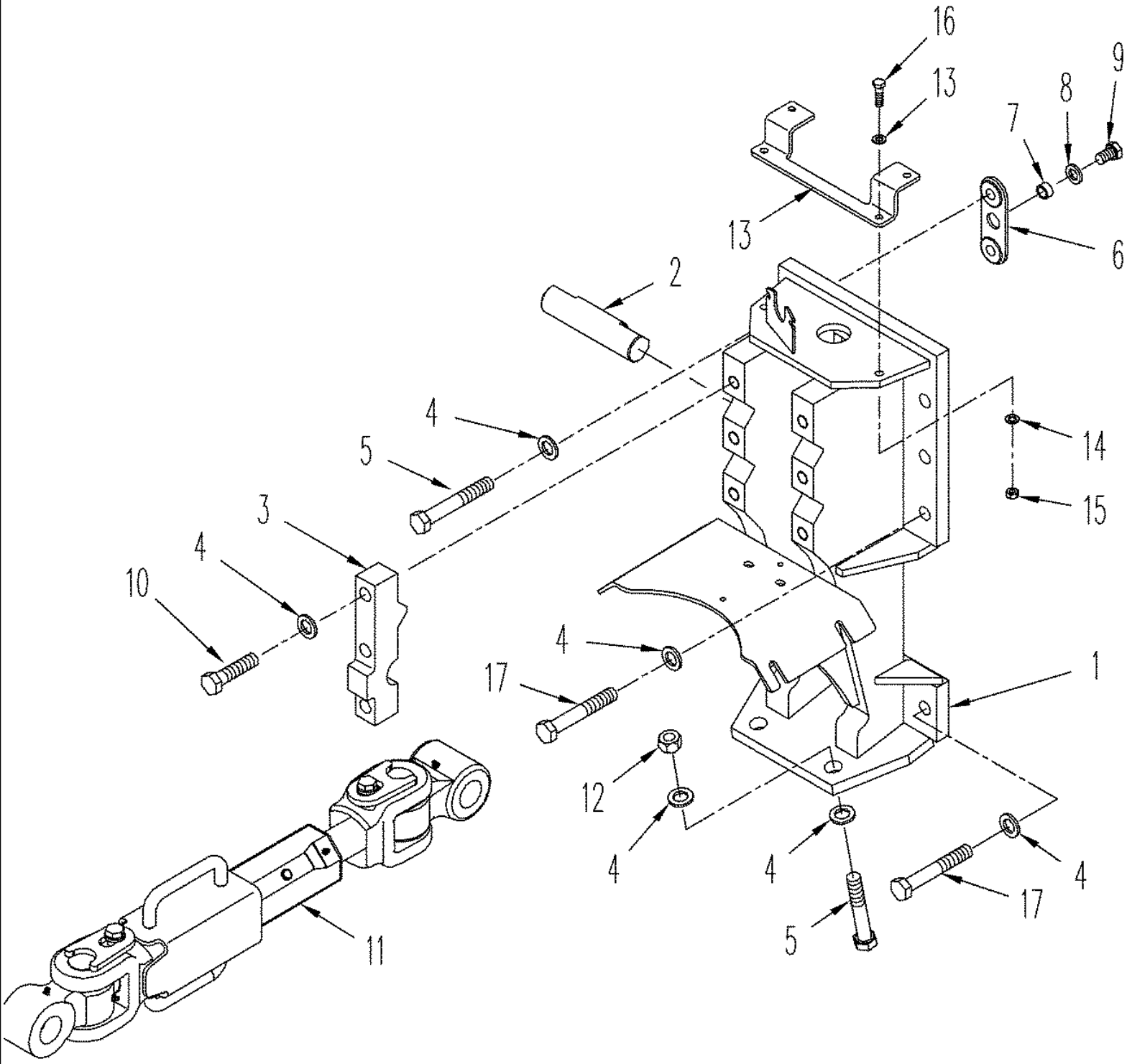

09 -03(2) THREE POINT HITCH - UPPER LINK, WITHOUT POWER TAKEOFF

ссылка	Номер детали	Кол-во	Описание
1	403739A1	1	BRACKET,
2	309663A1	1	PIN,
3	403737A1	2	CLAMP,
4	86625260	12	WASHER, M20 x 37.5 x 4, HT, 22 X 37 X 4 mm
5	9846950	6	BOLT, Hex, M20 x 90, 10.9, Cap, HH, CL 10.9, M20 x 2.5 x 90
6	259389A1	6	PLATE,
7	435501A1	2	SPACER,
8	86625266	2	WASHER, M17.5 x 30 x 4, HT,
9	86639032	2	BOLT, Hex, M16 x 25, 10.9, Full Thd, Hex, M16 x 25, 10.9, Full Thd
10	9846949	6	BOLT, Hex, M20 x 80, 10.9, Cap, HH, CL 10.9, M20 x 2.5 x 80
11	NSS	1	NOT SERVICED SEPARATELY, Link, Upper, Order Component Parts, See Figure(s) : 09-04
12	9847024	2	NUT, M20, Cl 10,
13	403736A1	1	PLATE,
14	86624176	4	WASHER, M10 x 20 x 2, M10
15	86500689	2	NUT, M10, Cl 10, M10; 10.9
16	86624978	2	BOLT, Hex, M10 x 35, 10.9, Full Thd,
17	86639145	4	BOLT, Hex, M20 x 130, 10.9, CL 10.9, M20 x 130

09 -04 LINK ASSY - UPPER

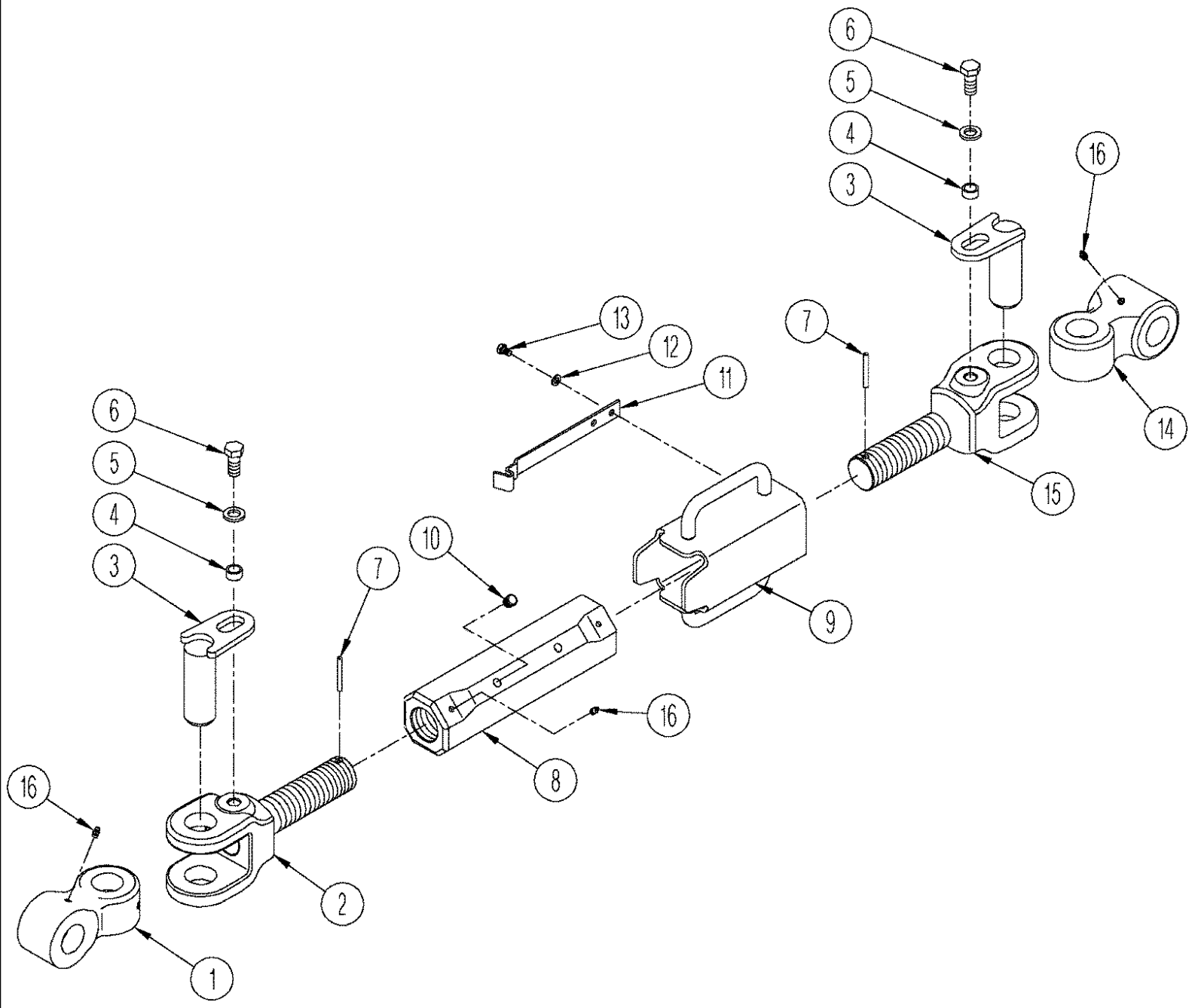

TJ375 TRACTOR - Chassis/Attachments

09 -04 LINK ASSY - UPPER

ссылка	Номер детали	Кол-во	Описание
1	403726A1	1	KNUCKLE ASSY.,
2	403731A1	1	LINK, U-Joint
3	435504A1	2	PIN,
4	435501A1	2	SPACER,
5	86625266	2	WASHER, M17.5 x 30 x 4, HT,
6	86529976	2	BOLT, Hex, M16 x 35, 10.9, M6 x 35; 10.9
7	86639255	2	PIN, ROLL, M6 x 55
8	403729A1	1	TURNBUCKLE,
9	403730A1	1	LOCK,
10	295004A1	4	PLUG,
11	282523A1	1	LOCK, Anti-Rotation
12	86624184	2	WASHER, M8 x 16 x 1.6, 9 x 17 x 1.6 mm
13	43231	2	BOLT, Hex, M8 x 12, 10.9, Full Thd, M8 x 12; 10.9
14	403728A1	1	KNUCKLE ASSY.,
15	403733A1	1	LINK, U-Joint
16	87414	6	NIPPLE, LUBE, 1/4"-28 x .56" lg, Drive,

09 -05 LINK ASSY - LIFT

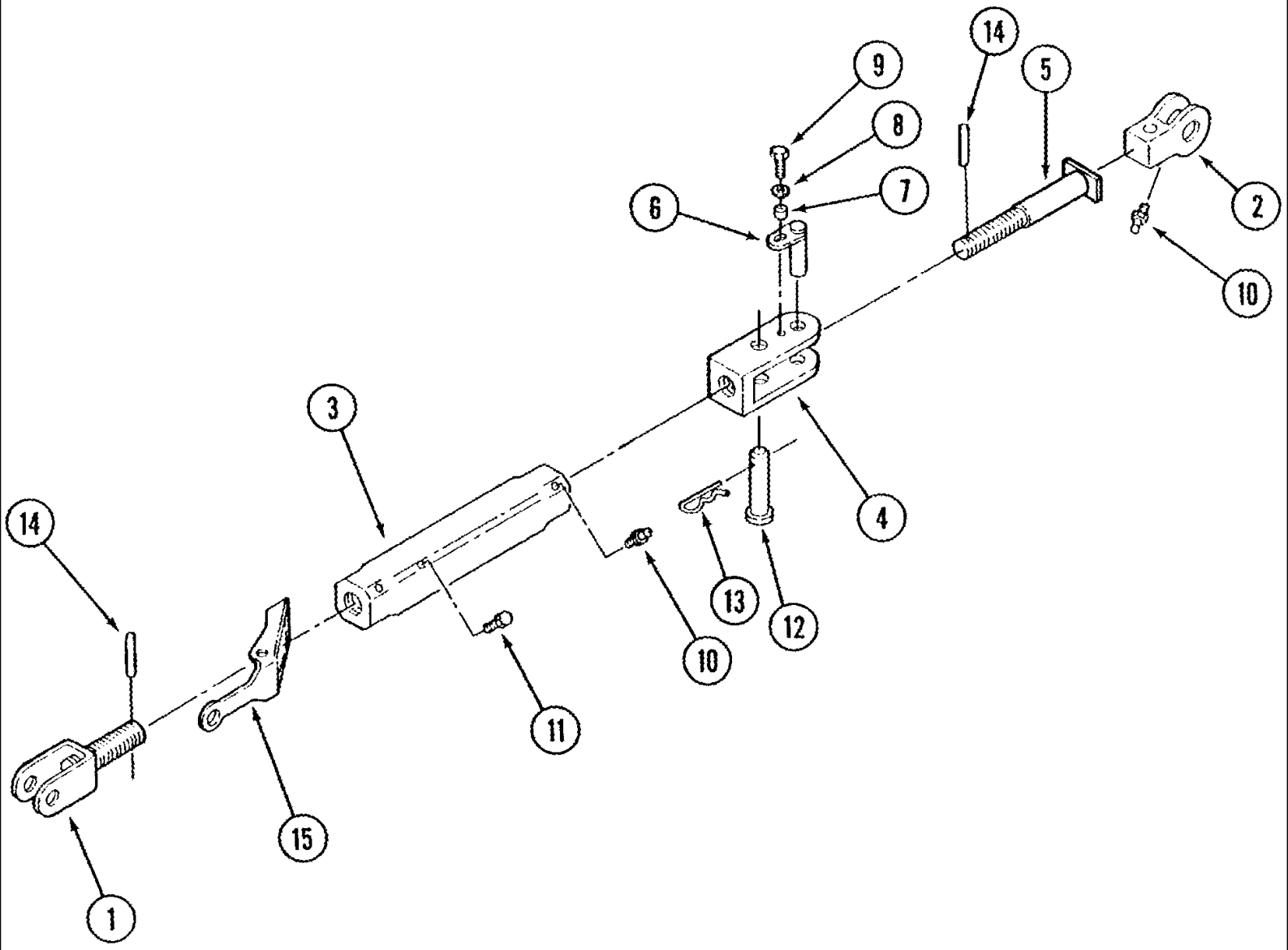

TJ375 TRACTOR - Chassis/Attachments

09 -05 LINK ASSY - LIFT

ссылка	Номер детали	Кол-во	Описание
1	329058A1	1	CLEVIS,
2	403720A1	1	KNUCKLE ASSY.,
3	403729A1	1	TURNBUCKLE,
4	403719A1	1	CLEVIS,
5	322446A1	1	BOLT, Special
6	435504A1	1	PIN,
7	435501A1	1	SPACER,
8	86625266	1	WASHER, M17.5 x 30 x 4, HT,
9	86529976	1	BOLT, Hex, M16 x 35, 10.9, M6 x 35; 10.9
10	87414	3	NIPPLE, LUBE, 1/4"-28 x .56" lg, Drive,
11	295004A1	4	PLUG,
12	388469A1	1	PIN, CLEVIS,
13	86637653	1	PIN, SPLIT (COTTER), Int, 7/16" x .177", 7/16 x 3-13/16
14	86639255	2	PIN, ROLL, M6 x 55, Coiled Spring
15	344696A2	1	LATCH,

09 -06 QUICK HITCH

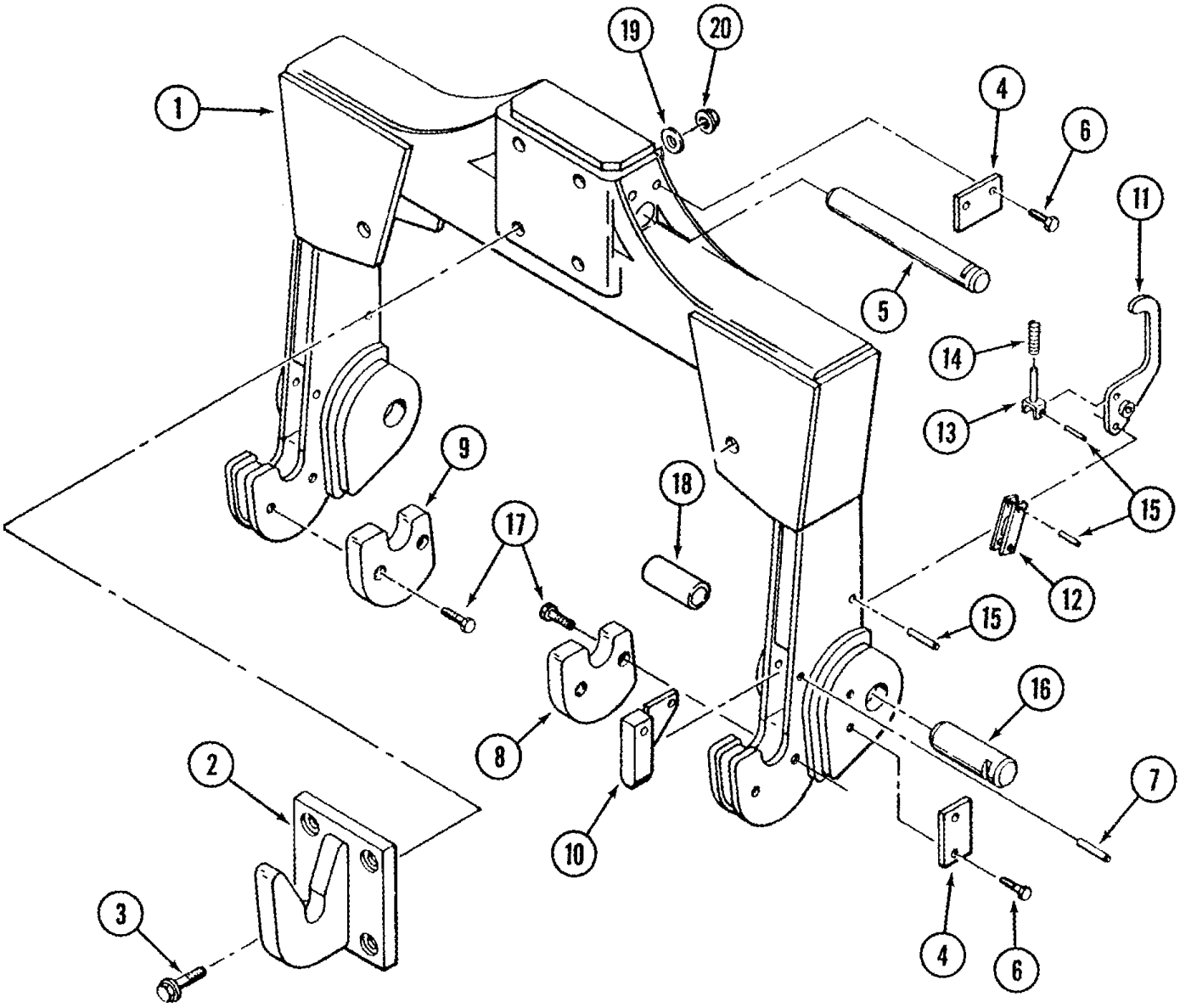

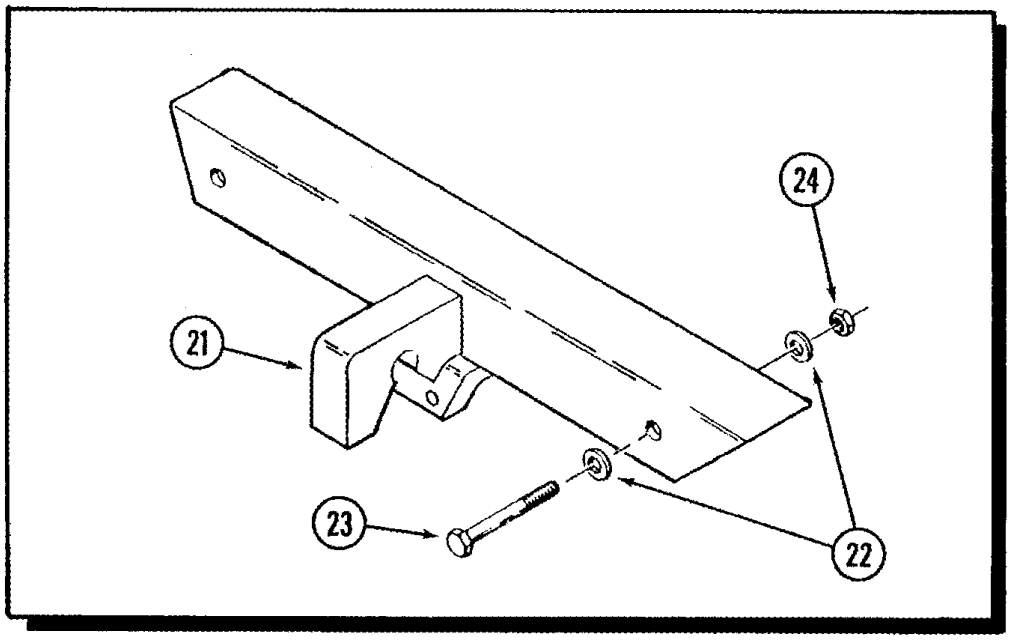

ссылка	Номер детали	Кол-во	Описание
			Category IV-Narrow
1	409653A1	1	COUPLING,
2	409654A1	1	HOOK,
3	86637940	4	BOLT, Hex Flg, 3/4"-10 x 2 1/2", G8, 3/4 NC x 2-1/2; 8
4	409664A1	3	BLOCK, Retainer
5	435497A1	1	PIN,
6	9790143	6	BOLT, Hex, 1/2"-13 x 1", G8, Full Thd,
7	86624095	4	PIN, 1/2" x 2 1/2", Coiled, 1/2" x 2 1/2", Coiled
8	409656A1	1	CAP, Spacer, RH
9	409658A1	1	CAP, Spacer, LH
10	409659A1	2	STOP, Hitch Release
11	409660A1	2	LATCH,
12	409661A1	2	LINK, CONNECTING,
13	409662A1	2	LINK, CONNECTING,
14	435440A1	2	SPRING, COMPRESSION,
15	86637812	6	PIN, 5/16" x 1 1/8", Coiled, 5/16" x 1 1/8", Coiled
16	435496A1	2	PIN,
17	88904	4	BOLT, Hex, 1/2"-13 x 1 1/2", G8, Full Thd, Cap, HH, G8, 1/2"-13 x 1-1/2"
18	383347A1	2	SPACER,
19	87381	4	WASHER, 3/4", SAE,
20	280375	4	NUT, LOCK, 3/4"-10, GC,
			Category III Conversion Kit
21	409655A1	1	HOOK,
22	86637954	4	WASHER, 1 1/16" x 2" x .209", 1-1/16 x 2 x 13/64
23	86637934	2	BOLT, Hex, 1"-8 x 7 1/2", G8, 1 NC x 7-1/2; 8
24	86511609	2	NUT, 1"-8, G8, 1 in; 8

09 -07 DRAWBAR - EXTENDABLE

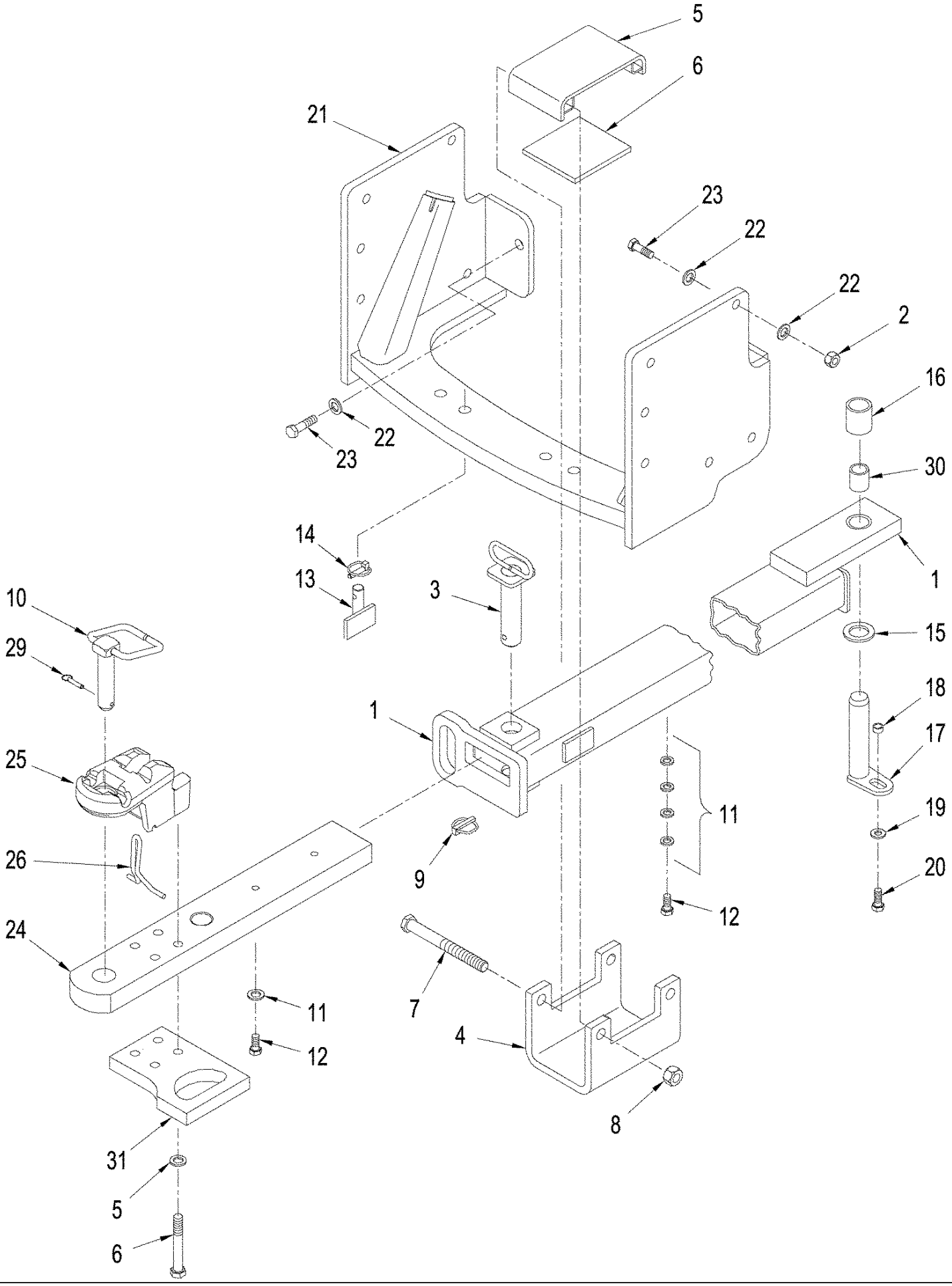

TJ375 TRACTOR - Chassis/Attachments

09 -07 DRAWBAR - EXTENDABLE

ссылка	Номер детали	Кол-во	Описание
1	402661A1	1	DRAWBAR, Receiver
2	9848973	12	NUT, M24, Cl 10, CL 10, M24 x 3.0
3	403199A1	1	PIN, HITCH,
4	403194A1	1	YOKE,
5	403195A1	1	COVER,
6	435498A1	1	PLASTIC,
7	435540A1	2	SCREW, 1 NC x 9-1/4
8	86511609	2	NUT, 1"-8, G8, 1 in; 8
9	86637660	1	PIN,
10	375720A1	1	PIN,
11	86625266	5	WASHER, M17.5 x 30 x 4, HT,
12	86529976	2	BOLT, Hex, M16 x 35, 10.9, M6 x 35; 10.9
13	403196A1	2	PIN,
14	517758R91	2	SPLIT PIN/SAFETY PIN,
15	SFD014088	1	WASHER, 1-3/4"
16	361696A2	1	SPACER,
17	195941A1	1	PIN,
18	435501A1	1	SPACER,
19	86624189	1	WASHER, 21/32" x 1 5/16" x .150", 21/32 x 1-5/16 x 5/32
20	374835	1	BOLT, Hex, M16 x 40, 10.9, Hex, M16 x 40, 10.9
21	87441225	1	HANGER,
22	86639319	26	WASHER, 26 x 44 x 5 mm
23	86505751	14	BOLT, Hex, M24 x 70, 10.9, Full Thd, M24 x 70; 10.9
24	87441131	1	DRAWBAR,
25	375719A1	1	STRAP, Drop Pin
26	375721A1	1	LATCH, Draw Bar
27	86625260	4	WASHER, M20 x 37.5 x 4, HT, 22 x 37 x 4 mm
28	9843612	4	BOLT, Hex, M20 x 100, 10.9, Cap, HH, CL 10.9, M20 x 2.5 x 100
29	393878A1	1	PIN, Quick Release
30	70-4620T2	1	BUSHING, LARGE, Drawbar Receiver

09 -08 DRAWBAR - HEAVY DUTY, WITH THREE POINT HITCH

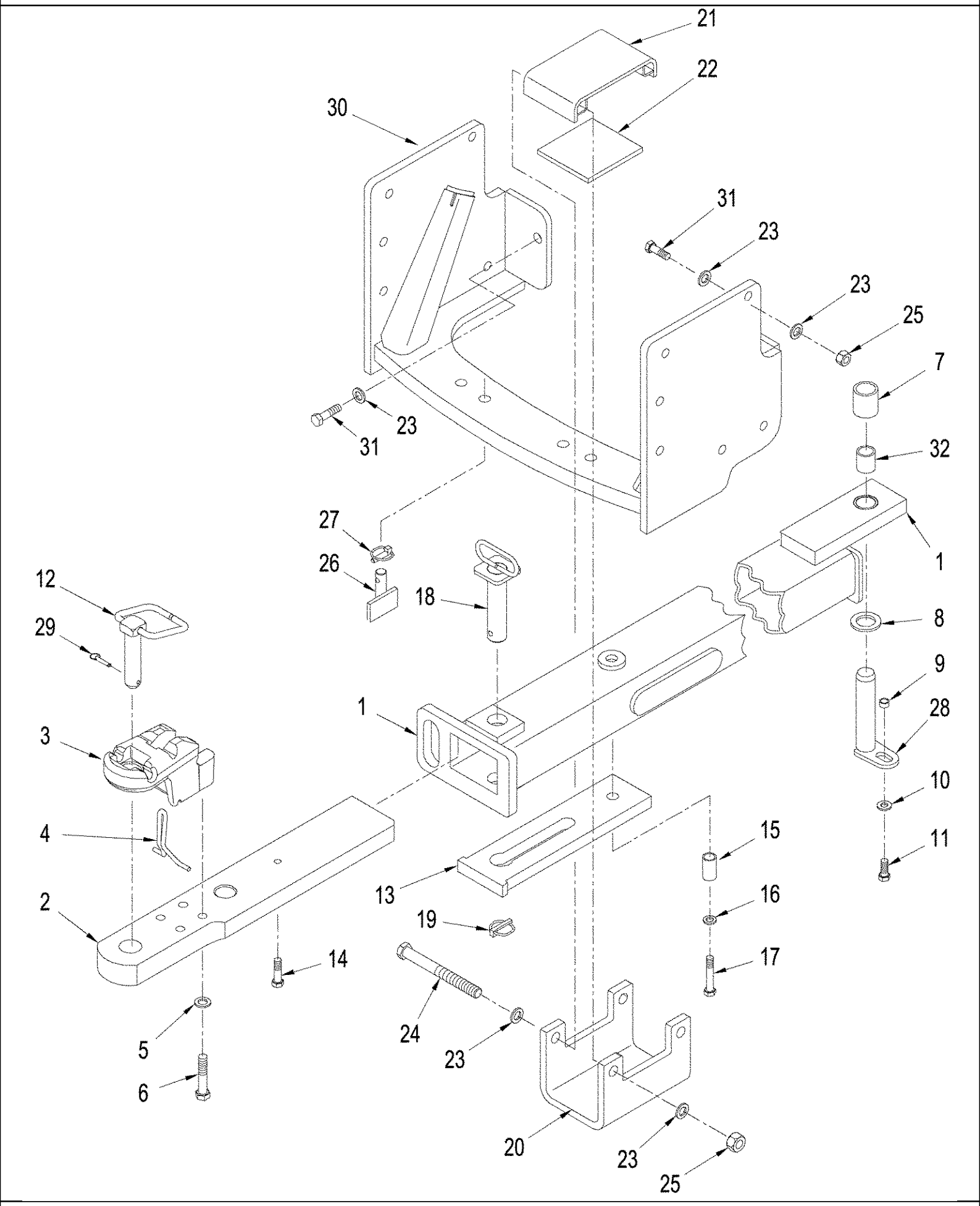

TJ375 TRACTOR - Chassis/Attachments

09 -08 DRAWBAR - HEAVY DUTY, WITH THREE POINT HITCH

ссылка	Номер детали	Кол-во	Описание
1	402654A1	1	DRAWBAR, Receiver
2	87441130	1	DRAWBAR,
3	375719A1	1	STRAP, Drop Pin
4	375721A1	1	LATCH, Draw Bar
5	86625260	4	WASHER, M20 x 37.5 x 4, HT, 22 x 37 x 4
6	9843612	4	BOLT, Hex, M20 x 100, 10.9, Cap, HH, CL 10.9, M20 x 2.5 x 100
7	361696A2	1	SPACER,
8	SFD014088	1	WASHER, 1-3/4"
9	70-5967T1	1	SPACER,
10	86624189	1	WASHER, 21/32" x 1 5/16" x .150", 21/32 x 1-5/16 x 5/32
11	374835	1	BOLT, Hex, M16 x 40, 10.9, Hex, M16 x 40, 10.9
12	375720A1	1	PIN,
13	430620A1	1	PLATE, SPACER,
14	86529976	1	BOLT, Hex, M16 x 35, 10.9, M6 x 35; 10.9
15	363131A2	1	SPACER,
16	80299	1	WASHER, 5/8",
17	9828248	1	BOLT, Hex, M16 x 60, 10.9,
18	403209A1	1	PIN,
19	86637660	1	PIN,
20	403217A1	1	YOKE,
21	403218A1	1	COVER ASSY,
22	363540A1	1	SPACER,
23	86639319	28	WASHER, 26 x 44 x 5 mm
24	86639187	2	BOLT, Hex, M24 x 270, 10.9, M24 x 270; 10.9
25	9848973	14	NUT, M24, Cl 10, CL 10, M24 x 3.0
26	403219A1	2	PIN ASSY.,
27	517758R91	2	SPLIT PIN/SAFETY PIN,
28	195941A1	1	PIN,
29	393878A1	1	PIN, Quick Release
30	87441225	1	HANGER,
31	86505751	14	BOLT, Hex, M24 x 70, 10.9, Full Thd, M24 x 70; 10.9
32	70-4620T2	1	BUSHING, LARGE, Drawbar Receiver

09 -09 DRAWBAR - HEAVY DUTY, WITHOUT THREE POINT HITCH

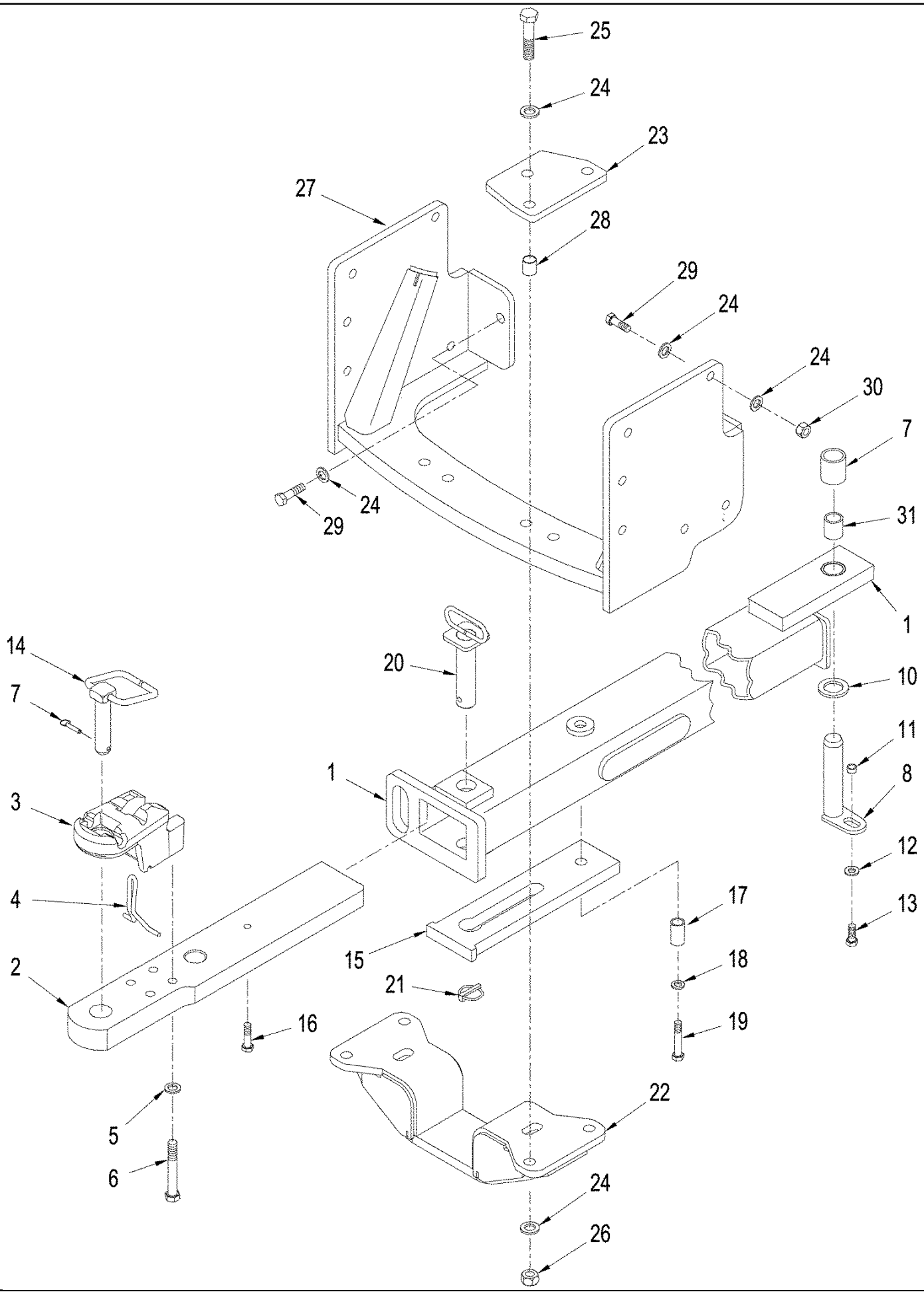

TJ375 TRACTOR - Chassis/Attachments

09 -09 DRAWBAR - HEAVY DUTY, WITHOUT THREE POINT HITCH

ссылка	Номер детали	Кол-во	Описание
1	402654A1	1	DRAWBAR, Receiver
2	87441130	1	DRAWBAR,
3	375719A1	1	STRAP, Drop Pin
4	375721A1	1	LATCH, Drop Bar
5	86625260	4	WASHER, M20 x 37.5 x 4, HT, 22 x 37 x 4
6	9843612	4	BOLT, Hex, M20 x 100, 10.9, Cap, HH, CL 10.9, M20 x 2.5 x 100
7	393878A1	1	PIN, Quick Release
8	195941A1	1	PIN,
9	361696A2	1	SPACER,
10	SFD014088	1	WASHER, 1-3/4"
11	435501A1	1	SPACER,
12	86624189	1	WASHER, 21/32" x 1 5/16" x .150", 21/32 x 1-5/16 x 5/32
13	374835	1	BOLT, Hex, M16 x 40, 10.9, Hex, M16 x 40, 10.9
14	375720A1	1	PIN,
15	430620A1	1	PLATE, SPACER,
16	86529976	1	BOLT, Hex, M16 x 35, 10.9, M6 x 35; 10.9
17	363131A2	1	SPACER,
18	80299	1	WASHER, 5/8",
19	375720A1	1	PIN, Hitch
20	430620A1	1	PLATE, SPACER,
21	86637660	1	PIN,
22	403220A1	1	HANGER,
23	403221A1	2	PLATE, PLATE
24	86639319	38	WASHER, 26 x 44 x 5 mm
25	9780064	6	BOLT, Hex, M24 x 110, 10.9, Cap, HH, CL 10.9, M24 x 3 x 110
26	9848973	12	NUT, M24, Cl 10, CL 10, M24 x 3.0
27	402651A1	1	LINK, Hanger
28	363130A1	4	SPACER,
29	86505751	14	BOLT, Hex, M24 x 70, 10.9, Full Thd, M24 x 70; 10.9
30	9848973	12	NUT, M24, Cl 10, CL 10, M24 x 3.0
31	70-4620T2	1	BUSHING, LARGE, Drawbar Receiver

TJ375 TRACTOR - Chassis/Attachments

09 -10 DRAWBAR - REYNOLDS, BSN RVS001801

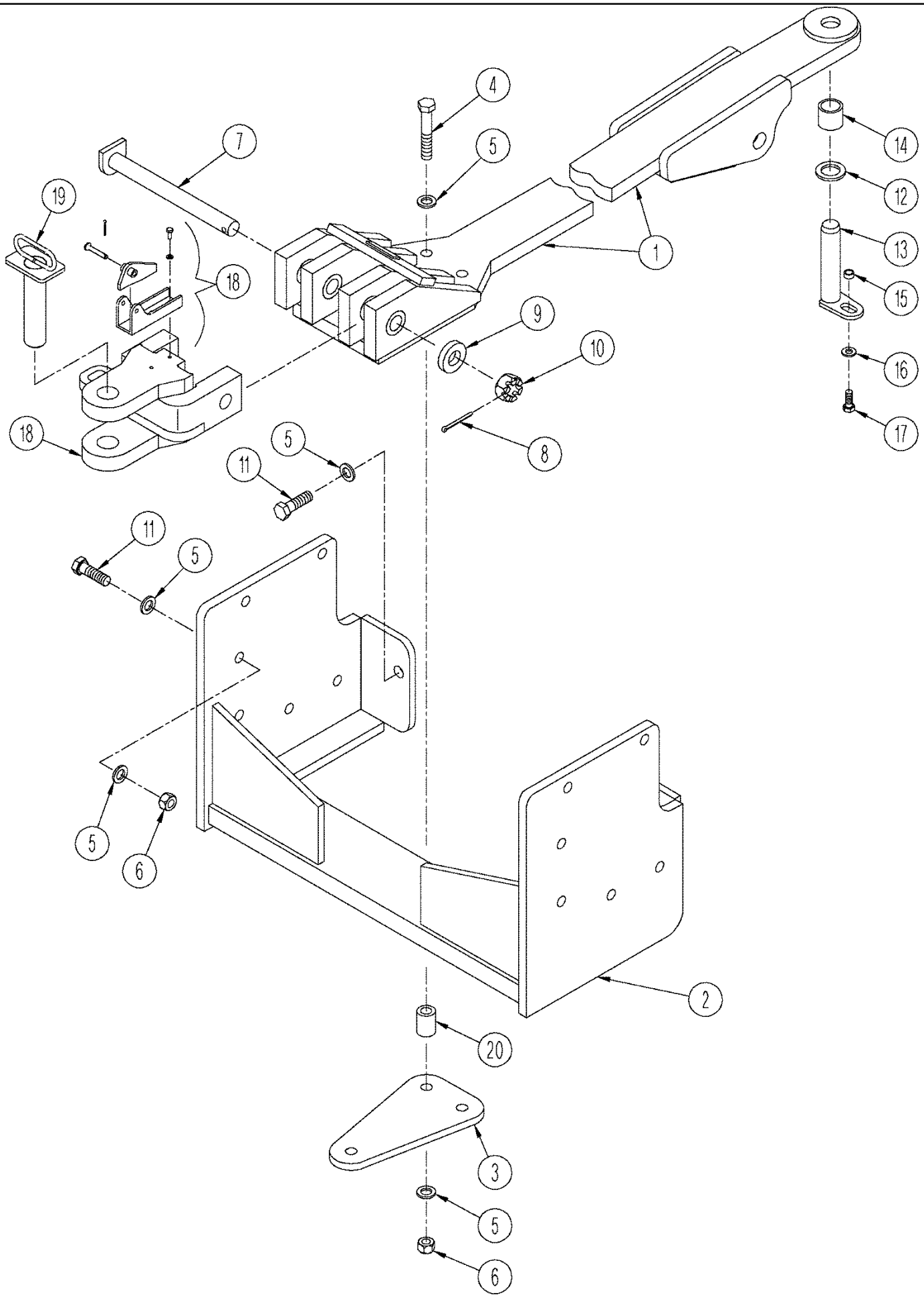

TJ375 TRACTOR - Chassis/Attachments

09 -10 DRAWBAR - REYNOLDS, BSN RVS001801

ссылка	Номер детали	Кол-во	Описание
1	NSS	1	NOT SERVICED SEPARATELY, Drawbar, Purchase Assembly and Component Parts Directly From Reynolds, McAllen, Texas.
2	NSS	1	NOT SERVICED SEPARATELY, Mount, Purchase Assembly and Component Parts Directly From Reynolds, McAllen, Texas.
3	431117A1	1	PLATE,
4	86639186	3	BOLT, Hex, M24 x 140, 10.9, M24 x 140; 10.9
5	86639319	32	WASHER, 26 x 44 x 5 mm
6	9848973	15	NUT, M24, Cl 10, CL 10, M24 x 3.0
	433446A1	1	PIN, HITCH, Inc. 7 - 10
7	NSS	1	NOT SERVICED SEPARATELY, Pin
8	NSS	1	NOT SERVICED SEPARATELY, Pin, Cotter
9	NSS	1	NOT SERVICED SEPARATELY, Washer
10	NSS	1	NOT SERVICED SEPARATELY, Nut, Slotted
11	86639184	14	BOLT, Hex, M24 x 80, 10.9, Full Thd, M24 x 80; 10.9
12	SFD014088	1	WASHER, 1-3/4"
13	195941A1	1	PIN,
14	381065A1	1	SPACER,
15	435501A1	1	SPACER,
16	86624189	1	WASHER, 21/32" x 1 5/16" x .150", 21/32 x 1-5/16 x 5/32
17	374835	1	BOLT, Hex, M16 x 40, 10.9, Hex, M16 x 40, 10.9
	365945A1	1	KIT, Adapter, Reverse, Inc. 18, 19
18	446133A1	1	ASSEMBLY, Reverse Adapter
19	359522A1	1	PIN,
20	434402A1	3	SPACER,

TJ375 TRACTOR - Chassis/Attachments

09 -10(01) DRAWBAR - REYNOLDS, ASN RVS001801

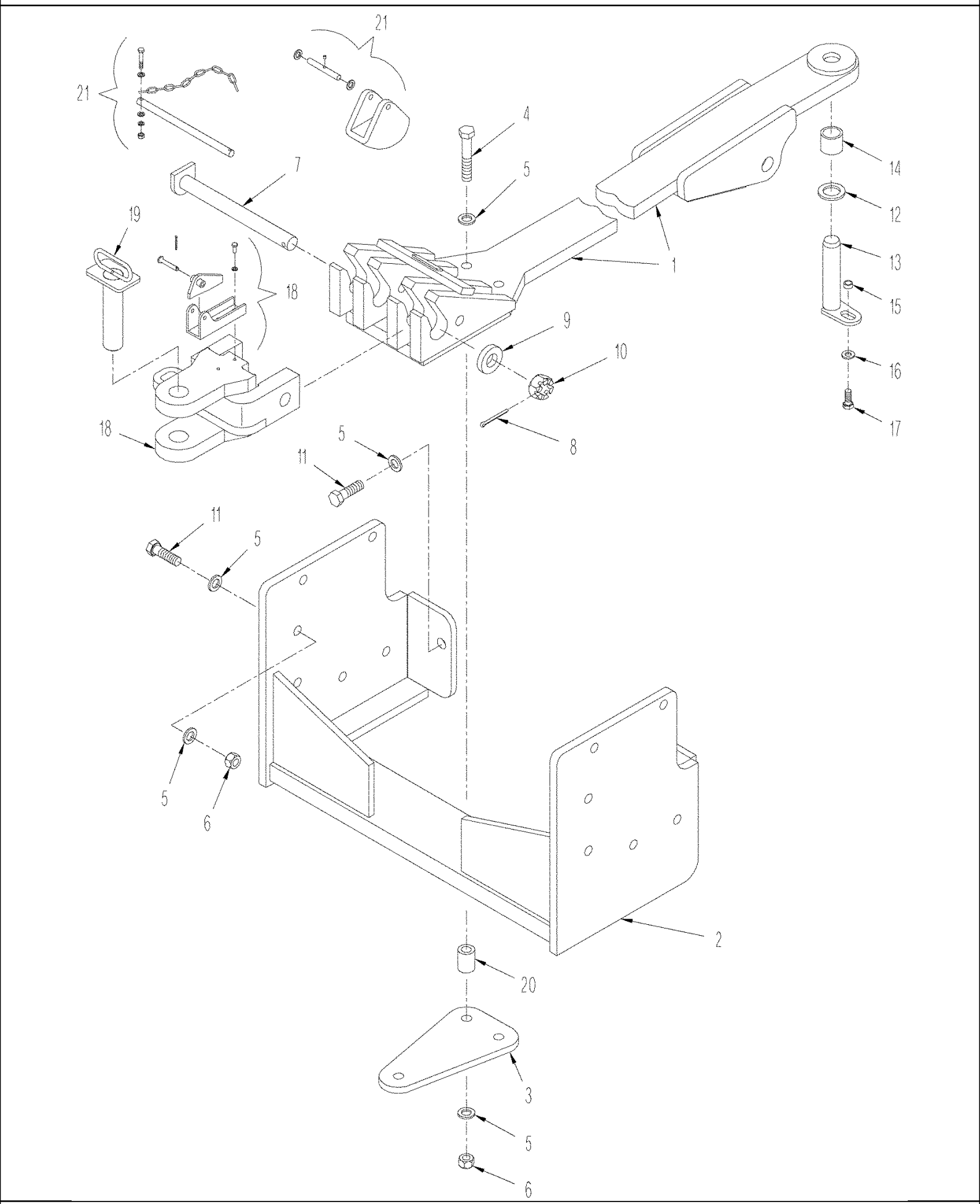

TJ375 TRACTOR - Chassis/Attachments

09 -10(01) DRAWBAR - REYNOLDS, ASN RVS001801

ссылка	Номер детали	Кол-во	Описание
1	NSS	1	NOT SERVICED SEPARATELY, Drawbar, Purchase Assembly and Component Parts Directly From Reynolds, McAllen, Texas.
2	NSS	1	NOT SERVICED SEPARATELY, Mount, Purchase Assembly and Component Parts Directly From Reynolds, McAllen, Texas.
3	87448334	1	PLATE,
4	86639186	3	BOLT, Hex, M24 x 140, 10.9, M24 x 140; 10.9
5	86639319	32	WASHER, 26 x 44 x 5 mm
6	9848973	15	NUT, M24, Cl 10, CL 10, M24 x 3.0
	433446A1	1	PIN, HITCH, Inc. 7 - 10
7	NSS	1	NOT SERVICED SEPARATELY, Pin
8	NSS	1	NOT SERVICED SEPARATELY, Pin, Cotter
9	NSS	1	NOT SERVICED SEPARATELY, Washer
10	NSS	1	NOT SERVICED SEPARATELY, Nut, Slotted
11	86639184	14	BOLT, Hex, M24 x 80, 10.9, Full Thd, M24 x 80; 10.9
12	SFD014088	1	WASHER, 1-3/4"
13	195941A1	1	PIN,
14	381065A1	1	SPACER,
15	435501A1	1	SPACER,
16	86624189	1	WASHER, 21/32" x 1 5/16" x .150", 21/32 x 1-5/16 x 5/32
17	374835	1	BOLT, Hex, M16 x 40, 10.9, Hex, M16 x 40, 10.9
	365945A1	1	KIT, Adapter, Reverse, Inc. 18, 19
18	446133A1	1	ASSEMBLY, Reverse Adapter
19	359522A1	1	PIN,
20	434402A1	3	SPACER,
21	NSS	1	NOT SERVICED SEPARATELY, Hitch, Quick

09 -11 CAB MOUNTING

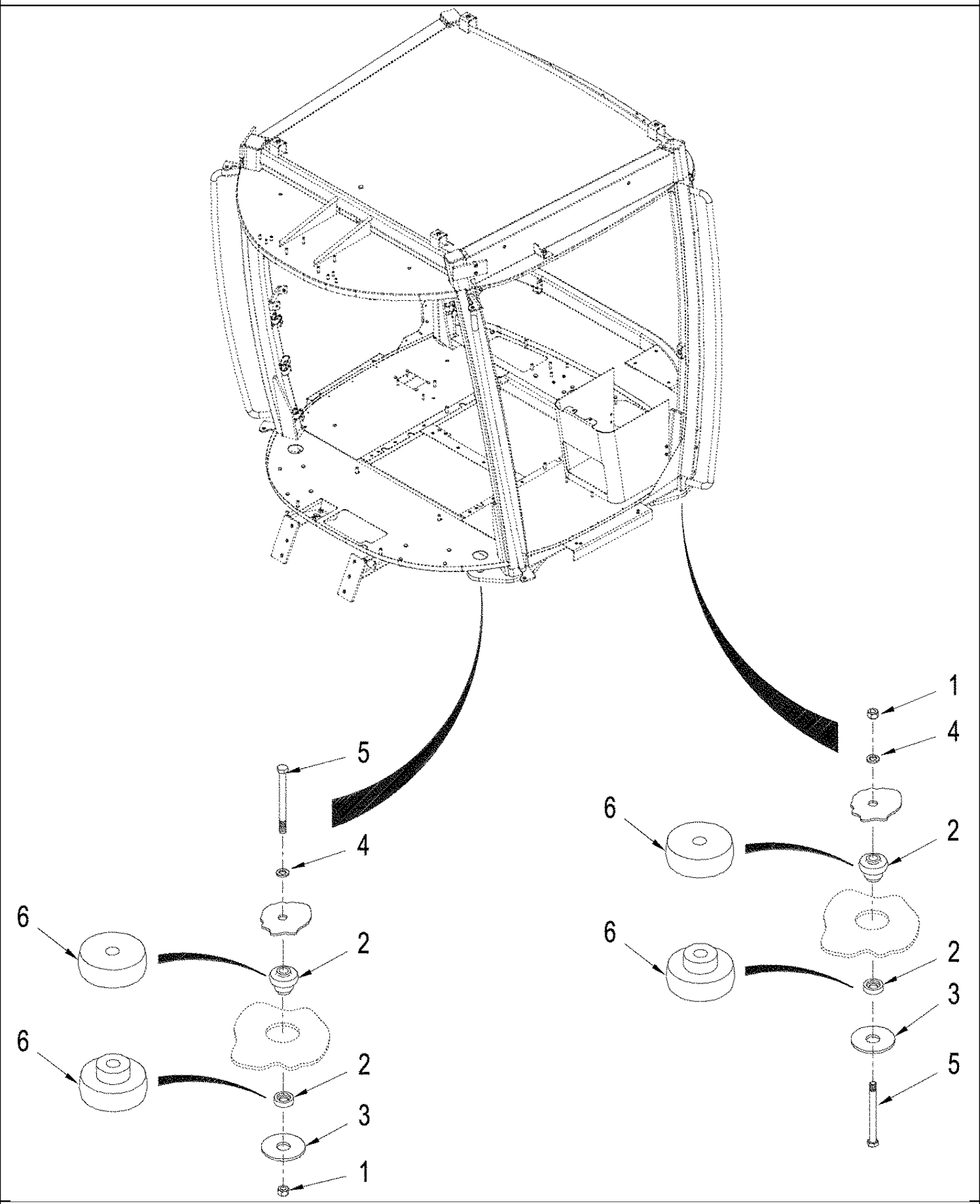

TJ375 TRACTOR - Chassis/Attachments

09 -11 CAB MOUNTING

ссылка	Номер детали	Кол-во	Описание
1	86639243	4	NUT, LOCK, M24 x 3, Cl 8,
2	377678A1	4	MOUNT, RUBBER, Isolator, BSN RVS002701
3	371043A1	4	WASHER, Steel
4	86639319	4	WASHER, 26 x 44 x 5 mm
5	86639185	4	BOLT, Hex, M24 x 120, 10.9, , BSN RVS002701
5	827-24160	4	BOLT, Hex, M24 x 160, 10.9, , Use with Rubber Cab Mounting Isolator 87422287, ASN RVS002701
6	87422287	4	MOUNT, RUBBER, Isolator, ASN RVS002701

09 -12 INTERIOR TRIM - STANDARD AND DELUXE CABS

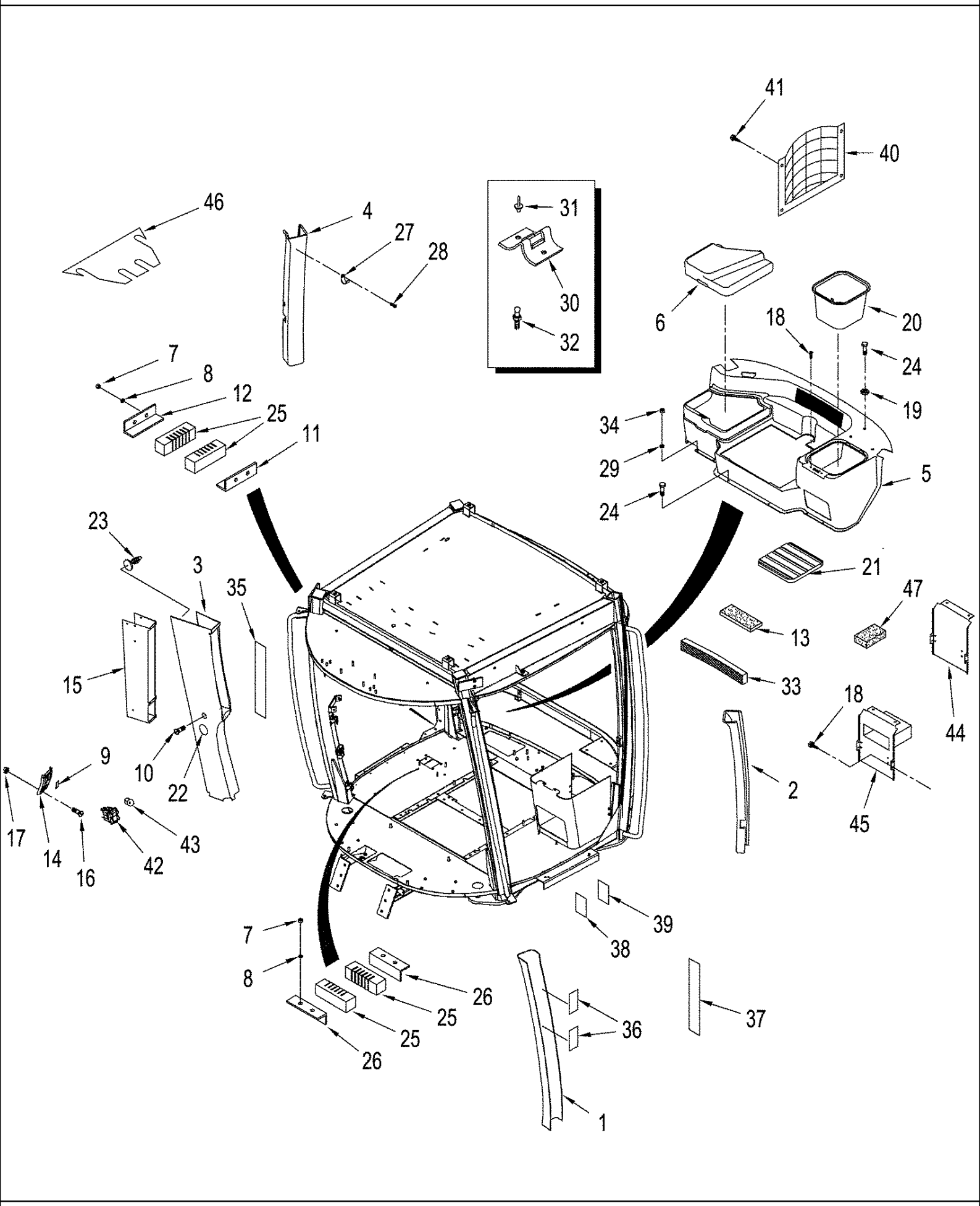

09 -12 INTERIOR TRIM - STANDARD AND DELUXE CABS

ссылка	Номер детали	Кол-во	Описание
1	394335A1	1	COVER, Post, Roll Over Protection
2	393376A1	1	COVER, Post, Roll Over Protection
3	394334A2	1	COVER, Post, Roll Over Protection
4	393374A1	1	COVER, Post, Roll Over Protection
5	412041A1	1	CONSOLE, Rear, Standard Cab
5	394331A1	1	CONSOLE, Rear, Deluxe Cab
6	394333A1	1	CONSOLE, Electronics
7	86500688	8	NUT, M6, Cl 10,
8	86624181	8	WASHER, M6, 6.6 x 12 x 1.6 mm
9	245918C1	2	CAP,
10	43233	4	BOLT, Hex, M8 x 20, 10.9, Cap, HH, CL 10.9, M8 x 1.25 x 20
11	291835A4	1	BRACKET,
12	291836A3	1	BRACKET,
13	259461A1	3	FOAM, Cut From : 283086A1
14	400098A1	1	BEZEL,
15	303158A5	1	SUPPORT,
16	86525168	2	TUBE, No. 10 x 1
17	177269A1	2	NUT, Special
18	86505530	6	BOLT, Hex, M6 x 20, 10.9, M6 x 20; 10.9
19	86624185	3	WASHER, M8 x 17.5 x 2, HT, M9
20	119308A2	1	ASH TRAY, Storage
21	250826A3	1	MAT,
22	401529A1	4	COVER, Hole, BSN RVS003801
22	376597A2	1	COVER, Hole, ASN RVS003801
23	376553A1	3	FASTENER,
24	86639271	3	BOLT, Hex Flg, M8 x 30, 10.9, Full Thd, Flange, M8 x 30; 10.9
25	435490A1	4	FOAM,
26	308579A1	2	BRACKET,
27	114549A1	1	COAT HOOK,
28	86639121	2	SCREW, SELF TAPPING, Oval Hd, M4.2 x 16, M4.2 x 16
29	86624182	4	WASHER, M6 x 18 x 1.6,
30	1961435C1	1	LATCH,
31	86637656	2	RIVET, Pop, 1/8" x .337",
32	1977929C1	1	STUD, Ball
33	87408613	1	FILTER, CAB, Air Recirculation
34	86500688	4	NUT, M6, Cl 10,
35	355371A2	1	TAPE, ADHESIVE,
36	356717A1	2	TAPE, ADHESIVE,
37	349366A1	1	TAPE, ADHESIVE,
38	356789A1	2	FASTENER, Velcro Hook, Cut From : 356788A1
39	357564A1	2	FASTENER, Velcro Loop, Cut From : 357653A1
40	369937A1	1	NET, Cargo, Deluxe Cab
41	369929A1	5	FASTENER, Christmas Tree
42	418506A1	1	SWITCH, Park Brake, Manual Shift Transmission
43	409808A1	1	INDICATOR, Hi / Lo, Manual Shift Transmission

ссылка	Номер детали	Кол-во	Описание
44	308955A2	1	BRACKET, , Standard Cab, Without Compact Disc
45	371685A4	1	BOX, Compact Disc, Deluxe Cab
46	307026A1	1	SHIELD, Cable Access
47	87416388	1	INSULATOR BLOCK,

09 -14 CAB - FLOORMATS AND DOORS

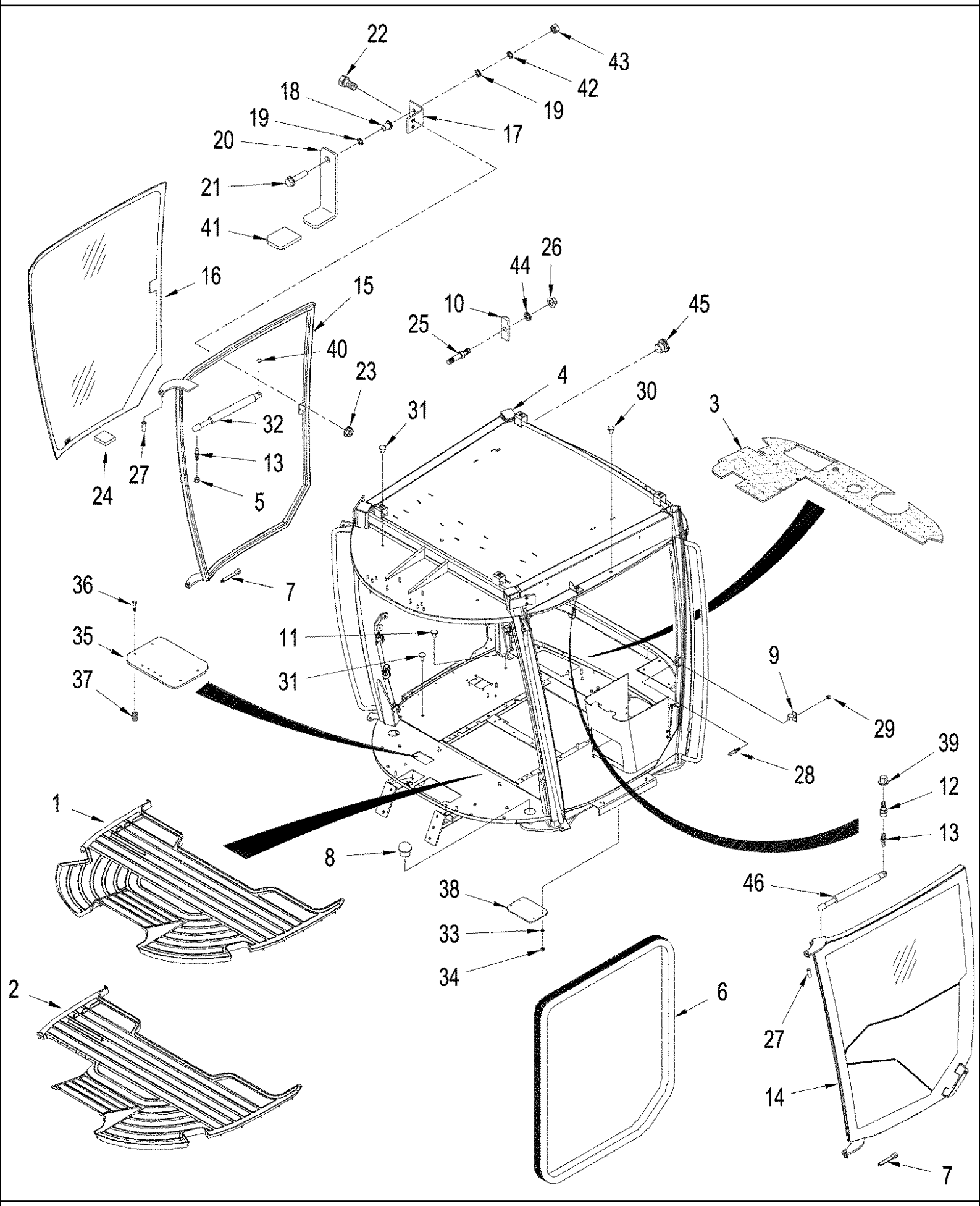

09 -14 CAB - FLOORMATS AND DOORS

ссылка	Номер детали	Кол-во	Описание
1	401556A2	1	MAT, FLOOR, Rubber, Power Shift Transmission
2	426962A1	1	MAT, FLOOR, Rubber, Manual Shift Transmission
3	302840A4	1	INSULATION, FOAM, Floor, Rear, BSN RVS003801
3	87416908	1	INSULATION, FOAM, Floor, Rear, ASN RVS003801
4	398296A3	1	CAB, ROPS
4	87415707	1	CAB, ROPS / FOPS
5	403749A1	1	NUT, M10; 10.9
6	390360A1	2	SEAL, Cut From : 388449A1
7	130003	2	PIN, SPLIT (COTTER), M3.2 x 20,
8	86637800	2	PLUG, 2-1/2 ID
9	369719A1	1	BRACKET, Door, Left-Hand
10	371554A1	1	BRACKET, Door, Right Hand
11	353-404	1	PLUG, Dome, .500" hole, Nylon,
12	390837A1	2	STUD, , BSN RVS001405
12	442085A1	2	MOUNTING PARTS, Stud, ASN RVS001405
13	3234063R1	2	BALL JOINT,
14	413022A2	1	DOOR ASSY., See Figure(s) : 09-15
	389175A3	1	WINDOW ASSY, Inc. 13, 15, 16 - 23, 33 & 42 - 44
15	389176A1	1	FRAME, WINDOW, RH
16	181242A3	1	WINDOW, Glass
17	87420877	1	BRACKET, Latch
18	87422906	1	BUSHING, M6
19	87423414	2	WASHER, Nylon
20	87418389	1	LATCH ASSY., RH Door
21	9804256	2	BOLT, Hex Flg, M6 x 20, 8.8,
22	86639037	2	BOLT, Hex, M6 x 16, 10.9, Cap, HH, M6 x 16, CL10.9
23	9804276	2	NUT, M6 x 1, Flg, Cl 8,
24	97268C1	10	SPACER,
25	87423532	1	PIN, Door Catch
26	86639244	1	NUT, Flange, M8
27	87429877	4	BUSHING,
28	R51754	1	CATCH, Striker
29	86637767	1	NUT, Flange, 7/16
30	241637	1	PLUG, Dome, .625" hole, Nylon, 5/8
31	86639049	13	PLUG, 1/2
32	87423389	1	DAMPER,
33	86624184	4	WASHER, M8 x 16 x 1.6, 9 x 16 x 1.6 mm
34	43362	4	NUT, M8, Cl 10,
35	414699A1	1	PLATE, , Without Manual Transmission
36	120100	2	BOLT, Hex, M6 x 20, 8.8, , Without Manual Transmission
37	404287A1	2	INSERT, , Without Manual Transmission
38	327310A1	1	PLATE, Cover
39	86512498	2	NUT, M16 x 2, Flg, Cl 10,
40	3233348R1	2	CLIP, Retainer, 13mm (1/2 in)
41	87423716	1	CAP, Vinyl

ссылка	Номер детали	Кол-во	Описание
42	9824259	3	WASHER, M6 x 12 x 1.6,
43	86514335	1	NUT, LOCK, M6, CL8
44	86624185	1	WASHER, M8 x 17.5 x 2, HT, 9 x 17 x 2 mm
45	86625130	1	PLUG, Dome, 1.250" hole, Nylon, Dome, 1-1/4", Used without INTELLISTEER Option
46	329720A1	1	CYLINDER, Gas Spring

09 -15 DOOR ASSY

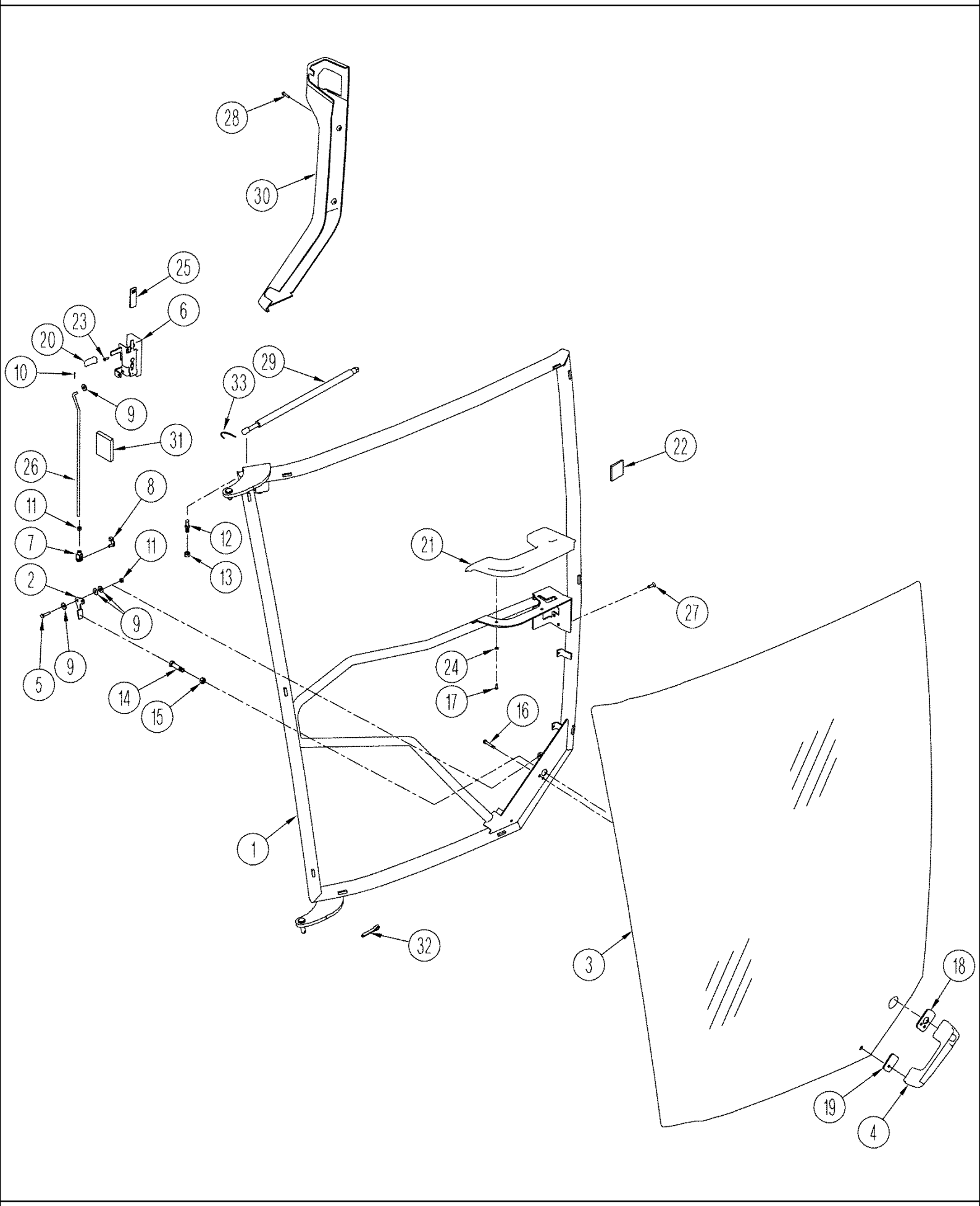

TJ375 TRACTOR - Chassis/Attachments

09 -15 DOOR ASSY

ссылка	Номер детали	Кол-во	Описание
	413022A2	1	DOOR ASSY., Inc. 1 - 27
1	388785A2	1	DOOR,
2	388934A1	1	LEVER, Door Latch
3	181239A4	1	WINDOW ASSY, Glass
4	435491A1	1	HANDLE,
5	300506	1	BOLT, Hex, M6 x 25, 8.8,
6	388874A2	1	LATCH,
7	86639101	1	CLEVIS, M6 x 12
8	906020R1	1	CLIP, M6 x 6
9	86624182	4	WASHER, M6 x 18 x 1.6,
10	86639114	1	PIN, SPLIT (COTTER), M1.6 x 10, 1,6 x 10 mm
11	86500688	2	NUT, M6, Cl 10,
12	3234063R1	1	BALL JOINT,
13	403749A1	1	NUT, M10; 10.9
14	86511933	1	SCREW, Cross Pan Hd, 1/4"-20 x 1 1/4", 1/4 x 1-1/4
15	7770	1	NUT, 1/4"-20, G5,
16	86639143	3	BOLT, Hex, Lock, M6 x 35, Cl 10.9, M6 x 35
17	86639119	3	SCREW, SELF TAPPING, Pan Hd, M4.2 x 16, M4,2 x 6
18	194174A1	1	GASKET, Rubber
19	194175A1	1	GASKET, Rubber
20	388122A1	1	HANDLE,
21	388120A2	1	ARMREST,
22	87543673	10	SPACER,
23	86639117	1	SCREW, SELF TAPPING, Pan Hd, M4.2 x 16, Pan Hd, M2 x 16
24	86639314	2	WASHER, M5 x 10 x 1, 10 x 5,5 x 1,0 mm
25	352842A1	1	KNOB, Lock
26	388936A1	1	ROD,
27	88961	4	SCREW, Hex Soc Flat Hd, 1/4"-20 x 3/4", Socket, 1/4 x 3/4
28	86639119	2	SCREW, SELF TAPPING, Pan Hd, M4.2 x 16, No. 10 x 1
29	329720A1	1	CYLINDER, Gas Spring
30	397159A1	1	COVER,
31	369566A1	1	TAPE, ADHESIVE,
32	130003	2	PIN, SPLIT (COTTER), M3.2 x 20,
33	3233348R1	2	CLIP, Retainer

09 -16 CAB - SKIRTS AND GLASS

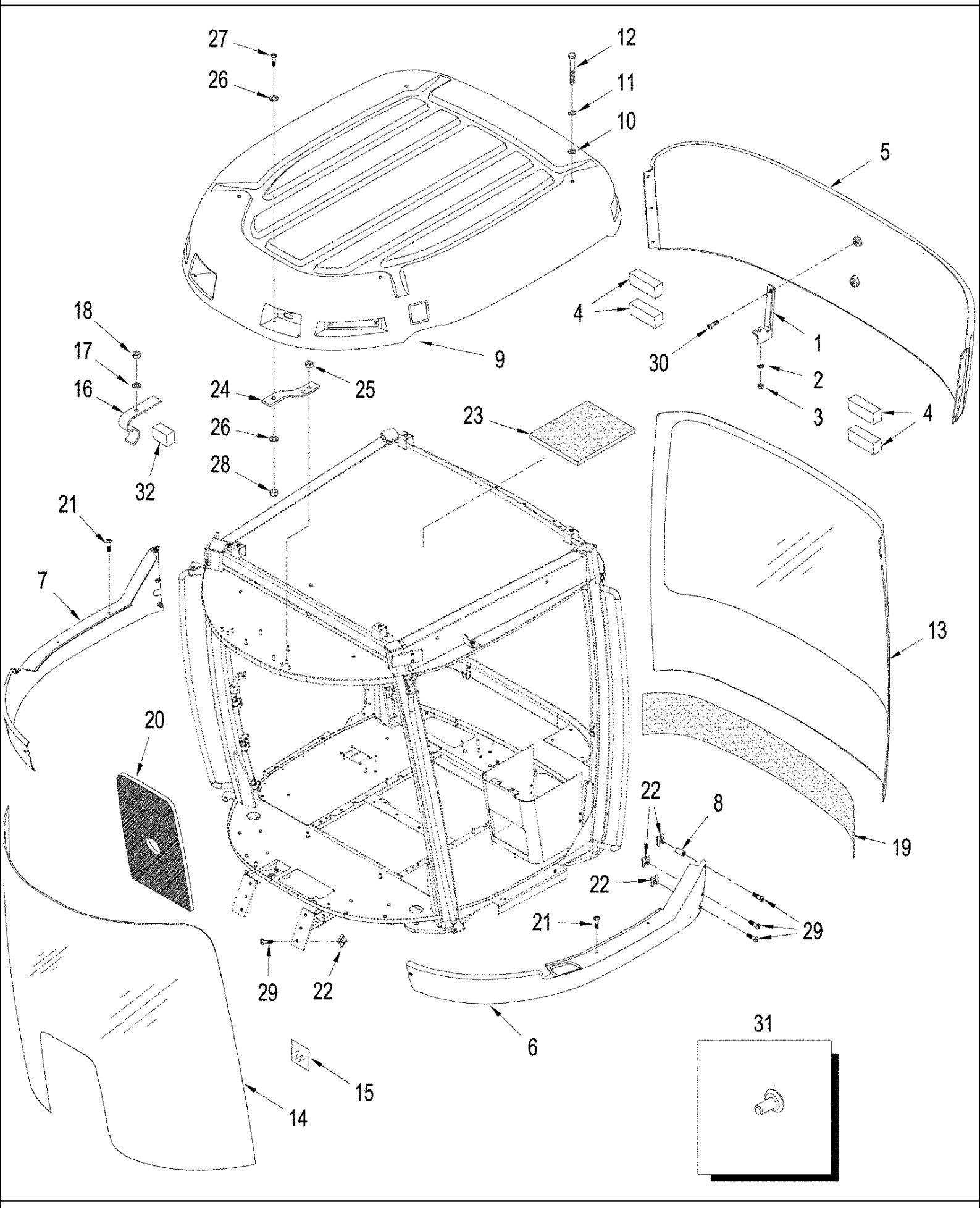

TJ375 TRACTOR - Chassis/Attachments

09 -16 CAB - SKIRTS AND GLASS

ссылка	Номер детали	Кол-во	Описание
1	341574A4	1	BRACKET,
2	86624184	4	WASHER, M8 x 16 x 1.6, 9 x 17 x 1,6 mm
3	43362	4	NUT, M8, Cl 10,
4	403325A2	4	FOAM, Spacer
5	87535372	1	SKIRT, Rear
6	402946A1	1	SKIRT, LH
7	402945A1	1	SKIRT, RH
8	404287A1	4	INSERT, Threaded ,M6 x 1
9	NSS	1	NOT SERVICED SEPARATELY, Roof Assy, See Figure(s) : 09-17
10	361191A1	4	GROMMET,
11	86639326	4	WASHER, M17.5 x 34 x 5, HT, 17,5 x 34 x 5 mm
12	86529976	4	BOLT, Hex, M16 x 35, 10.9, M6 x 35; 10.9
13	181240A2	1	GLASS, Rear
14	181241A3	1	GLASS, Windshield
14	86991553	1	WINDSHIELD, Windshield, Laminated (Europe Only)
15	97268C1	34	SPACER,
16	117707A3	7	CLAMP, Window
17	86624184	6	WASHER, M8 x 16 x 1.6, 9 x 17 x 1,6 mm
18	43362	6	NUT, M8, Cl 10,
19	259462A1	1	INSULATION, FOAM, 1525 mm (60 in)
20	283531A1	1	INSULATION, FOAM,
21	86585703	4	SCREW, Cross Pan Hd, M8 x 20,
22	404882A1	2	FASTENER, Spring, M6
23	355716A3	1	FOAM,
24	364156A1	4	BRACKET, Roof Support
25	43362	8	NUT, M8, Cl 10,
26	86625263	8	WASHER, M8 x 20 x 1.6,
27	43234	4	BOLT, Hex, M8 x 25, 10.9, Cap, HH, CL 10.9, M8 x 1.25 x 25
28	86528579	4	NUT, LOCK, M8 x 1.25, Cl 10,
29	86511831	8	SCREW, Cross Pan Hd, M6 x 25, Pan Hd, CL 4.8, M6 x 1 x 25
30	86511830	2	SCREW, Cross Pan Hd, M6 x 20, , Without Flex Control
31	241637	1	PLUG, Dome, .625" hole, Nylon, Dome, 5/8
32	87543673	10	SPACER,

09 -17 ROOF

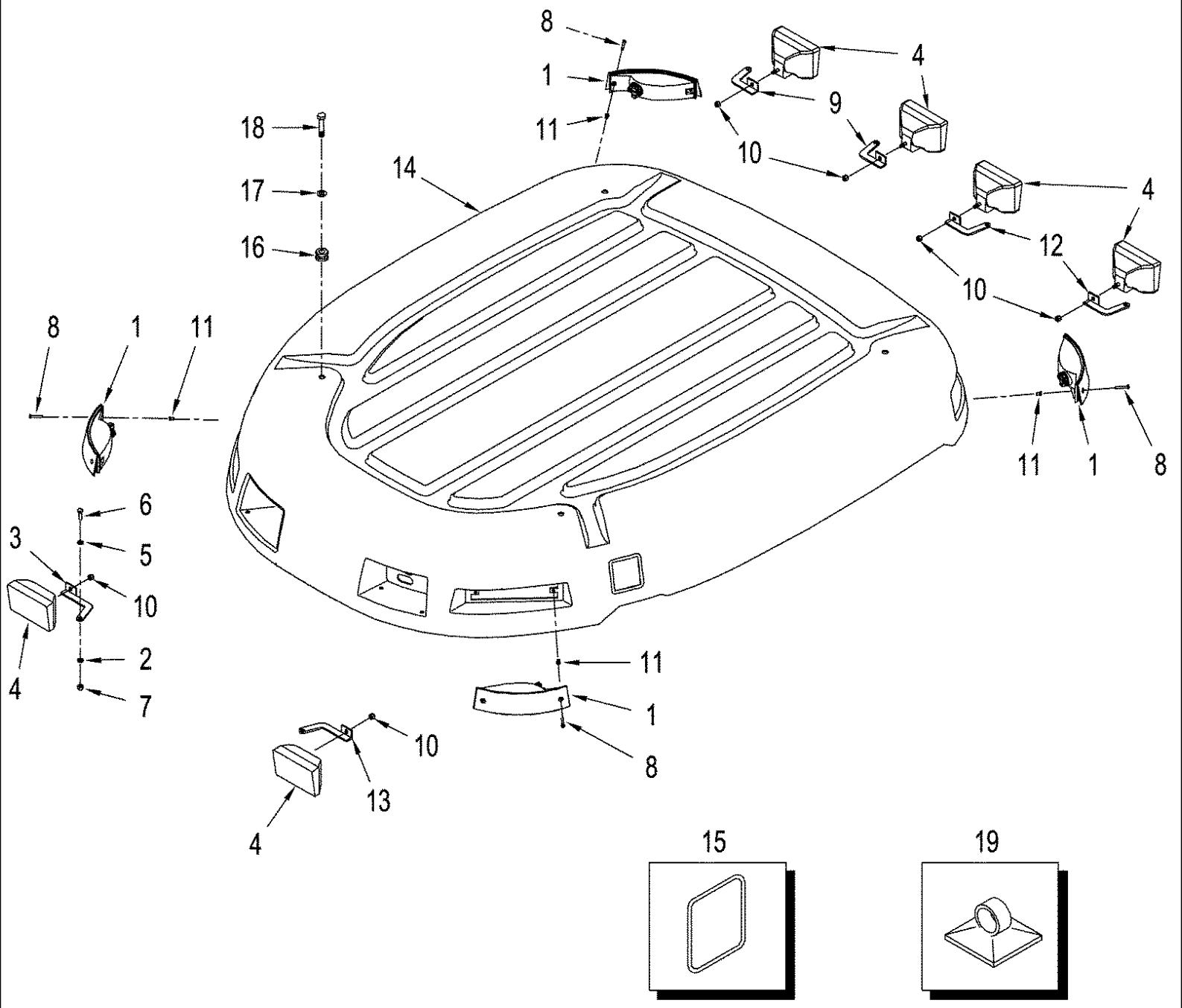

TJ375 TRACTOR - Chassis/Attachments

09 -17 ROOF

ссылка	Номер детали	Кол-во	Описание
1	320246A1	4	LAMP, Warning, Hazard, See Figure (s) : 04-13
2	355532A1	6	WASHER, Nylon
3	353561A1	1	BRACKET, Light, RH, Front
4	92269C1	6	LAMP, WORK, See Figure(s) : 04-13
5	86639309	12	WASHER, M8 x 16 x 1.6, 9 x 16 x 1,6 mm
6	43234	6	BOLT, Hex, M8 x 25, 10.9, Cap, HH, CL 10.9, M8 x 1.25 x 25
7	86528579	6	NUT, LOCK, M8 x 1.25, Cl 10,
8	86546084	8	SCREW, Cross Pan Hd, M5 x 35,
9	353563A1	2	BRACKET, Light, RH, Rear
10	86500689	6	NUT, M10, Cl 10, M10; 10.9
11	451165A1	8	INSERT, THREADED,
12	353562A1	2	BRACKET, Light, LH, Rear
13	353560A1	1	BRACKET, Light, LH, Front
14	87418085	1	ROOF,
15	408658A1	2	DECAL, Cover, Without Mirror
16	361191A1	4	GROMMET,
17	86639311	4	WASHER, M16 x 34 x 3, 17.5 x 34 x 3.0 mm
18	86529976	4	BOLT, Hex, M16 x 35, 10.9, Hex, M16 x 35, 10.9
19	435436A1	7	MOUNT, RUBBER, Cable Tie

09 -18 CAB - HEADLINER AND CONTROL PANEL, STANDARD CAB

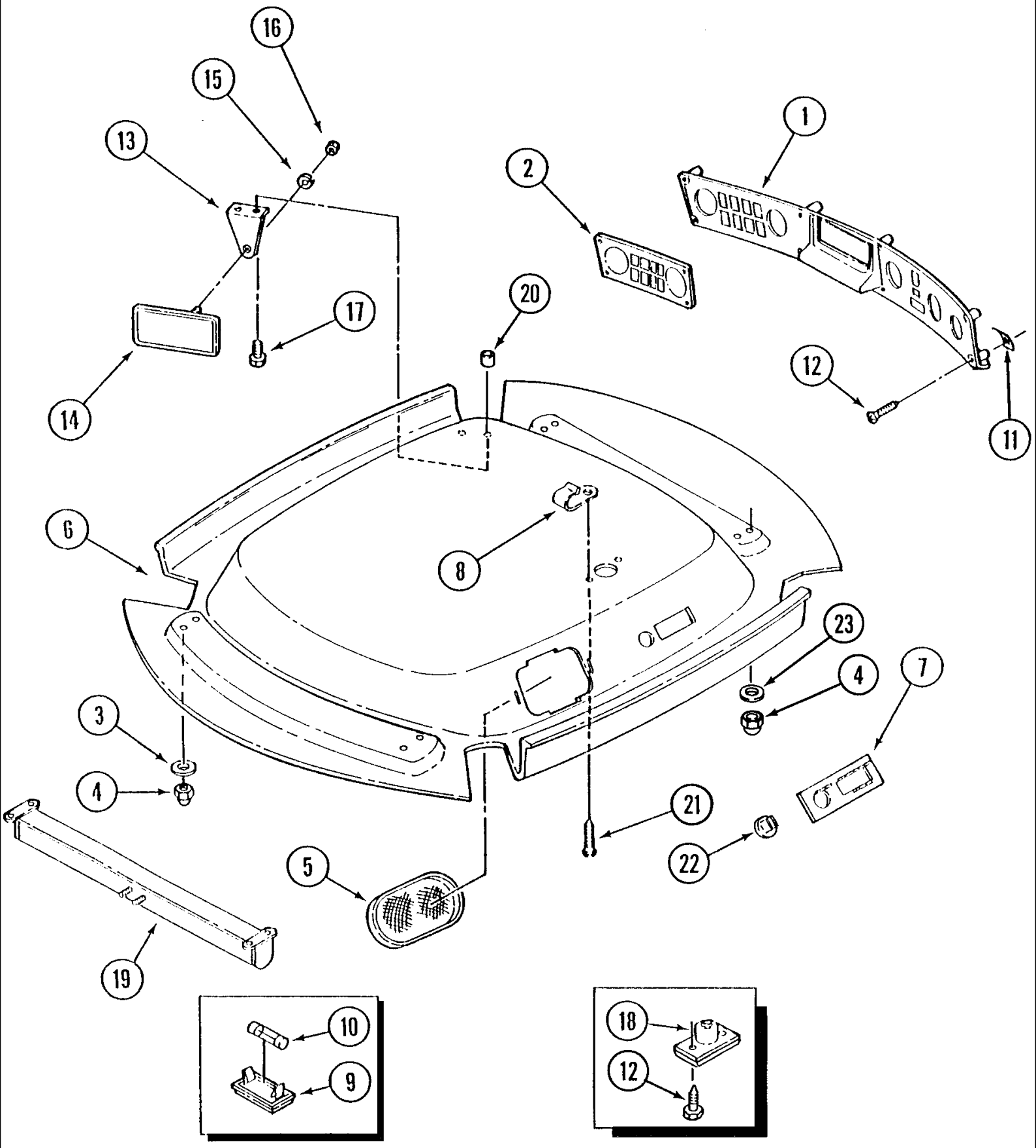

09 -18 CAB - HEADLINER AND CONTROL PANEL, STANDARD CAB

ссылка	Номер детали	Кол-во	Описание
1	431229A1	1	PANEL, Control
2	431230A1	1	DECAL, Light Panel, See Figure(s) : 09-59
3	297865A1	4	WASHER, 6.6 x 12 x 1.6 mm
4	86639246	8	NUT, Crown, M6, Cl8, Special, M6; 8
5	400111A1	2	COVER, Speaker
	402714A1	1	PANEL, Inc. 6 - 8
6	NSS	1	NOT SERVICED SEPARATELY, Headliner
7	393383A1	1	BRACKET, Domelight
8	302862A1	2	NUT, Special
9	1983391C1	1	LAMP, Interior, Inc. 10
10	E35556	1	BULB,
11	177269A1	8	NUT, Special
12	1270741C1	10	SCREW, SELF TAPPING, Cross Pan Hd, #8 x 1", Pointed
13	435493A1	1	BRACKET, Mirror
14	A177462	1	MIRROR, Rear View, Inc. 15, 16
15	85700573	1	WASHER, LOCK, Ext Tooth, M6,
16	86642419	1	PIN, LOCK, 1/4 NF
17	86639023	2	BOLT, Hex Flg, M6 x 30, 10.9, Flange, M6 x 30; 10.9
18	83882C91	1	LAMP, Courtesy
19	87450400	1	VISOR, SUN, Rear
20	435438A1	1	SPACER,
21	1270741C1	2	SCREW, SELF TAPPING, Cross Pan Hd, #8 x 1", Pointed
22	280628A1	1	PLUG, Switch, Without Mirror
23	895-30106	4	WASHER, M6 x 18 x 1.6, 6,6 x 18 x 1,6 mm

09 -19 CAB - HEADLINER AND CONTROL PANEL, DELUXE CAB

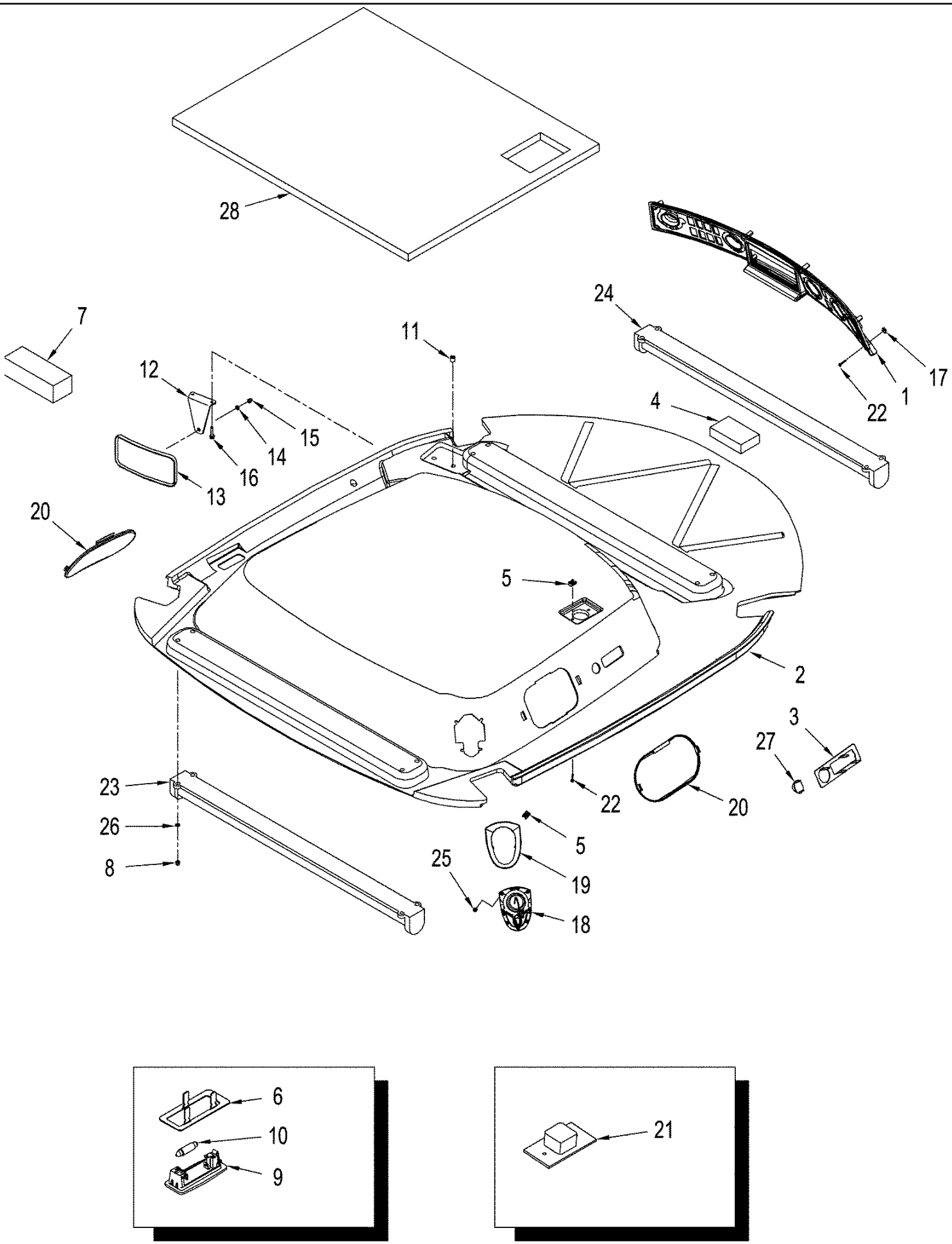

TJ375 TRACTOR - Chassis/Attachments

09 -19 CAB - HEADLINER AND CONTROL PANEL, DELUXE CAB

ссылка	Номер детали	Кол-во	Описание
1	431229A1	1	PANEL, Control, BSN RVS003801
1	87453142	1	PANEL, Control, ASN RVS003801
	393319A1	1	PANEL, Headliner Assy., Inc. 2 - 5
2	NSS	1	NOT SERVICED SEPARATELY, Headliner
3	393383A1	1	BRACKET, Domelight
4	328039A1	3	PAD, No. 6 x 5/8"
5	302862A1	6	NUT, Special
6	393384A1	2	BRACKET, Domelight
7	328037A1	1	PAD, 9 x 20 x 1.6 mm
8	86639246	8	NUT, Crown, M6, Cl8, Special, M6; 8
9	1983391C1	3	LAMP, Interior, Inc. 10
10	E35556	1	BULB,
11	435438A1	2	SPACER,
12	435493A1	1	BRACKET,
13	A177462	1	MIRROR, Rearview, Inc. 14, 15
14	85700573	1	WASHER, LOCK, Ext Tooth, M6,
15	86642419	1	PIN, LOCK, 1/4 NF
16	86639023	2	BOLT, Hex Flg, M6 x 30, 10.9, Flange, M6 x 30; 10.9
17	177269A1	8	NUT, Special
18	372892A1	1	LAMP, Map
19	280569A2	1	BEZEL, , BSN RVS003801
20	400111A1	2	COVER, Speaker, BSN RVS003801
21	83882C91	1	LAMP,
22	1270741C1	10	SCREW, SELF TAPPING, Cross Pan Hd, #8 x 1", Pointed
23	87450400	1	VISOR, SUN, Rear
24	246324A1	1	VISOR, SUN, Front
25	86637783	4	SCREW, SELF TAPPING, Cross Pan Hd, #6 x 5/8", No. 6 x 5/8
26	297865A1	8	WASHER, 9 x 20 x 1.6 mm
27	280628A1	1	PLUG, Switch, Without Mirror
28	384759A1	1	FOAM,

TJ375 TRACTOR - Chassis/Attachments

09 -20 FRONT CONSOLE

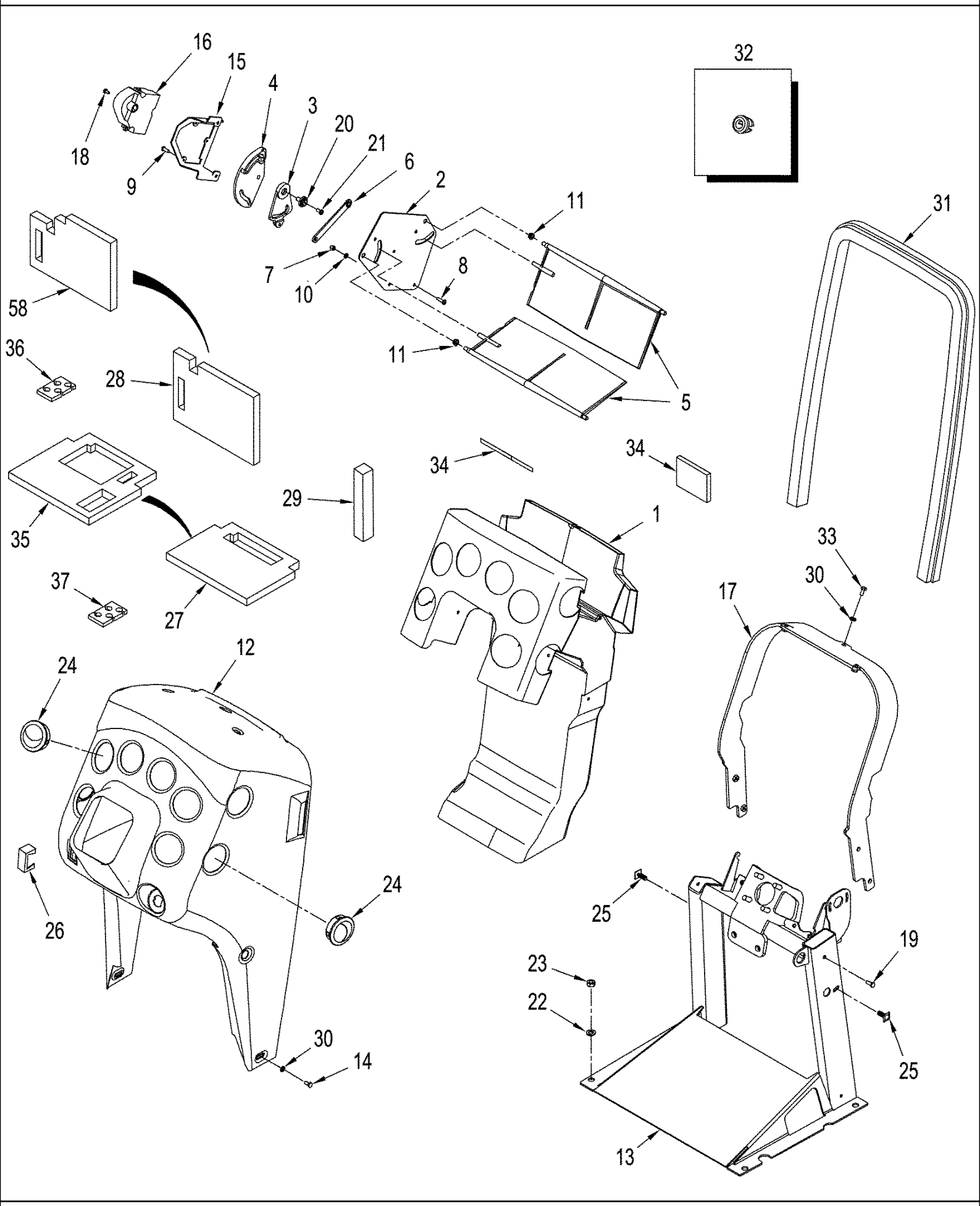

TJ375 TRACTOR - Chassis/Attachments

09 -20 FRONT CONSOLE

ссылка	Номер детали	Кол-во	Описание
1	87438118	1	VENT, Air Conditioning and Heating
2	257059A2	1	PLATE, Support
3	281138A2	1	GUIDE,
4	281139A1	1	GUIDE,
5	246476A1	2	VENT,
6	275601A1	1	LINK,
7	86625075	1	NUT, LOCK, M4 x .7, Cl 8, M4
8	86511042	1	SCREW, Cross Pan Hd, M4 x 16,
9	86511823	3	SCREW, Cross Pan Hd, M4 x 8, Pan Hd, CL 4.8, M4 x .7 x 8
10	86624179	1	WASHER, M4, 4.3 x 9 x 0.8 mm
11	435474A1	3	BEARING, NYLON,
12	414161A2	1	CONSOLE,
13	281425A5	1	SUPPORT, Steering
14	86508616	2	BOLT, Hex, M6 x 12, 10.9, Cap, HH, CL 10.9, M6 x 1 x 12
15	277438A1	1	SUPPORT,
16	275602A1	1	ACTUATOR, Actuator
17	280566A1	1	SUPPORT,
18	86639117	3	SCREW, SELF TAPPING, Pan Hd, M4.2 x 16, M4.2 x 16
19	86639037	4	BOLT, Hex, M6 x 16, 10.9, M6 x 16; 10.9
20	281140A1	1	WASHER, Special
21	86585706	1	SCREW, Cross Pan Hd, M4 x 10,
22	86624176	4	WASHER, M10 x 20 x 2, M10
23	86500689	4	NUT, M10, Cl 10, M10; 10,9
24	414350A1	10	VENT,
25	301098A1	2	CLIP,
26	86000535	1	PLUG, 1.427" x .62", Plastic, Switch, Without Ether Start
27	381027A1	1	INSULATION, FOAM, Acoustical, Deluxe Cab, BSN RVS003801
28	384758A1	1	INSULATION, FOAM, , Deluxe Cab, BSN RVS003801
29	384786A1	2	INSULATION, FOAM, , Deluxe Cab
30	86624181	2	WASHER, M6, 6.6 x 12 x 1.6 mm
31	284150A2	1	STRIP, RUBBER,
32	A67295	1	PLUG,
33	436276A1	3	SCREW, M6
34	446687A1	2	FOAM,
35	87437453	1	FOAM, Accoustical, ASN RVS003801
36	87437455	1	FOAM, Accoustical, ASN RVS003801
37	87437454	1	DECAL, Sealing, ASN RVS003801
38	87442532	1	SEAL, , ASN RVS003801

09 -21 CONSOLE - RIGHT-HAND ARMREST, MANUAL

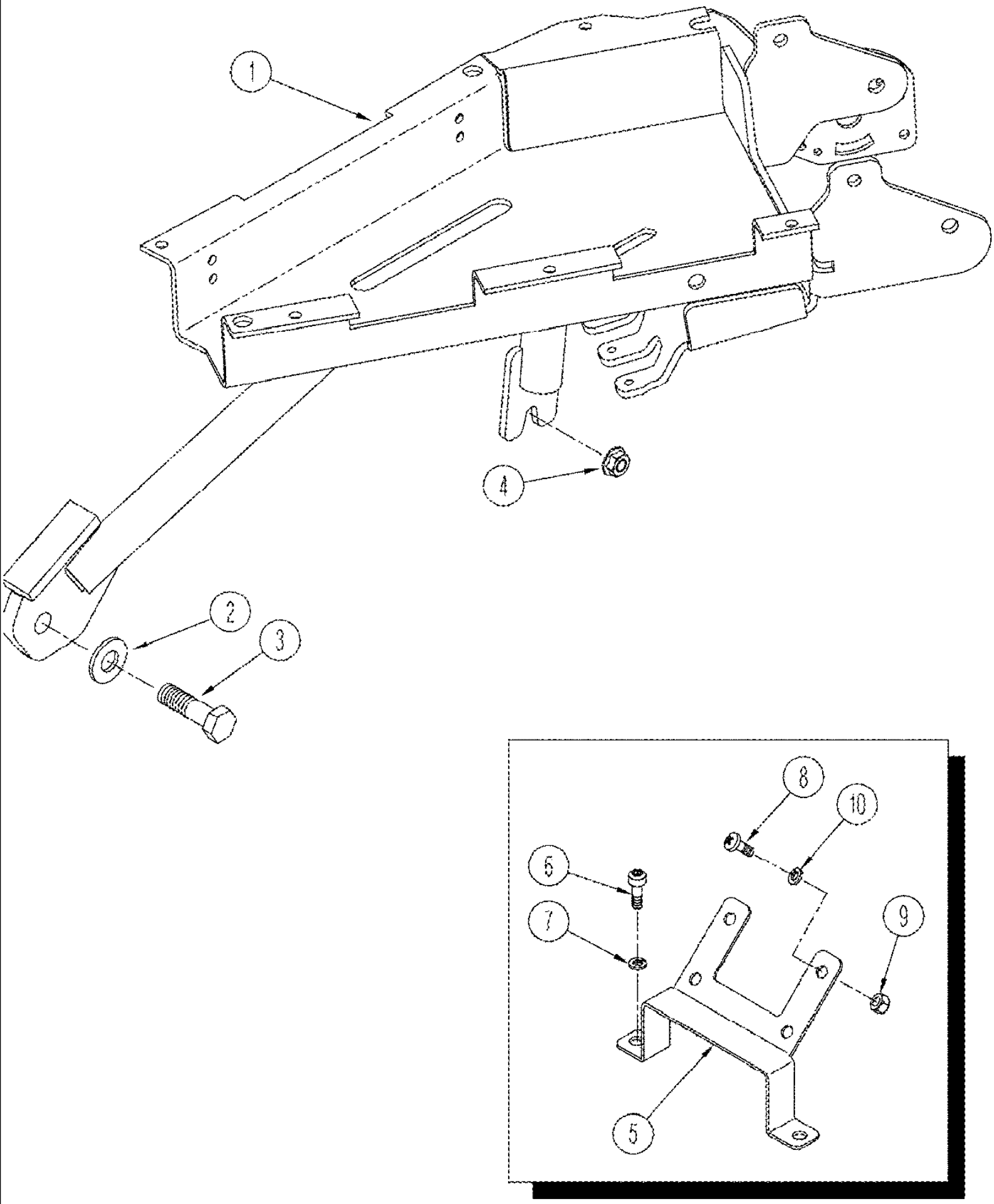

09 -21 CONSOLE - RIGHT-HAND ARMREST, MANUAL

ссылка	Номер детали	Кол-во	Описание
1	319915A4	1	SUPPORT, Manual, Non-Adjustable, Standard Cab
1	319913A4	1	CONSOLE, Electronic, Non-Adjustable, Deluxe Cab
2	86625254	1	WASHER, M12 x 28 x 2.5, 13.5 x 28 x 2.5 mm
3	43260	1	BOLT, Hex, M12 x 30, 10.9, , Standard Cab
3	86639031	1	BOLT, Hex, M12 x 45, 10.9, Full Thd, M12 x 45; 10.9, Deluxe Cab
4	9804277	1	NUT, M8 x 1.25, Flg, Cl 8,
5	349563A1	1	BRACKET, , Without Arm Rest Unit
6	86639293	2	SCREW, Hex Soc Hd, M4 x 12, 8.8, Socket, M4 x 12
7	86624179	2	WASHER, M4, 4.3 x 9 x 0.8 mm
8	86511816	4	SCREW, Cross Pan Hd, M3 x 16,
9	86508812	4	NUT, M3, Cl 8,
10	86639310	4	WASHER, M3,
11	86598598	1	CLAMP, 3/4", Insul, 1/2" Bolt,

09 -22 CONSOLE - RIGHT HAND ARMREST, ELECTRIC

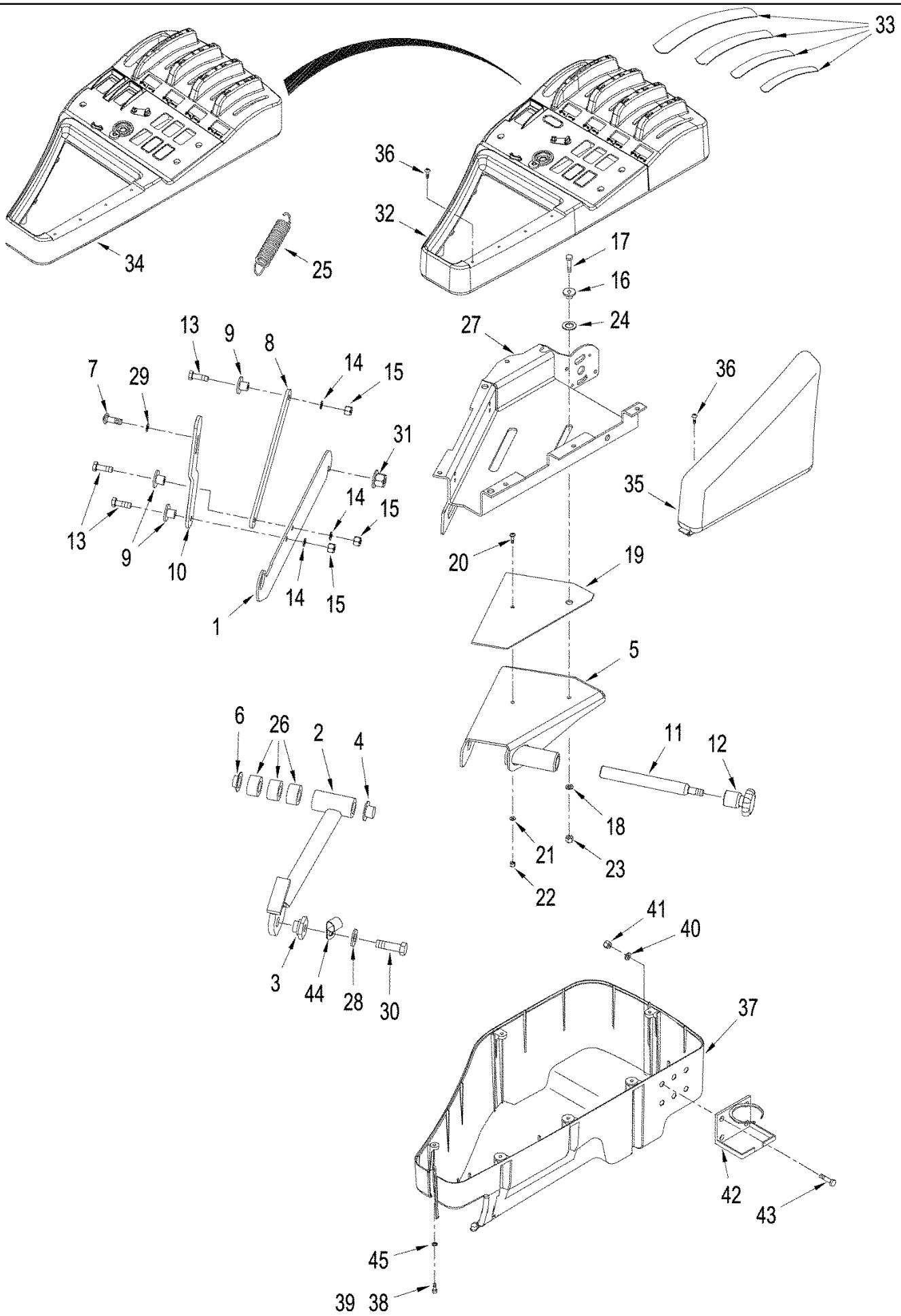

09 -22 CONSOLE - RIGHT HAND ARMREST, ELECTRIC

ссылка	Номер детали	Кол-во	Описание
	87519426	1	SUPPORT, Electronic, Inc. 1 - 27
1	NSS	1	NOT SERVICED SEPARATELY, Plate
2	NSS	1	NOT SERVICED SEPARATELY, Support
3	222292A1	1	NUT, Special
4	72323	1	BUSHING, , BSN RVS003801
4	185062R1	1	BUSHING, , ASN RVS003801
5	NSS	1	NOT SERVICED SEPARATELY, Support, Lower
6	294296A1	1	BUSHING,
7	355343A1	1	BOLT, Special
8	NSS	1	NOT SERVICED SEPARATELY, Link
9	NSS	3	NOT SERVICED SEPARATELY, Washer, Shoulder
10	355342A1	1	BRACKET,
11	355344A1	1	BOLT, Special
12	319870A1	1	KNOB,
13	43234	3	BOLT, Hex, M8 x 25, 10.9, Cap, HH, CL 10.9, M8 x 1.25 x 25
14	86625263	3	WASHER, M8 x 20 x 1.6,
15	86528579	3	NUT, LOCK, M8 x 1.25, Cl 10,
16	277582A1	2	WASHER, Special
17	86639041	2	BOLT, Hex, M6 x 25, 10.9, Full Thd, M6 x 25; 10.9
18	86624181	2	WASHER, M6, 6.6 x 12 x 1.6 mm
19	277576A1	1	SPACER,
20	86639261	1	SCREW, Cross Pan Hd, M4 x 14, M4 x 14
21	86624179	1	WASHER, M4, 4.3 x 9 x 0.8 mm
22	86625075	1	NUT, LOCK, M4 x .7, Cl 8, M4
23	412250	2	NUT, LOCK, M8 x 1.25, Cl 8, M6
24	277570A1	2	WASHER, Special
25	NSS	1	NOT SERVICED SEPARATELY, Spring
26	294295A1	3	BUSHING,
27	NSS	1	NOT SERVICED SEPARATELY, Support, Upper
28	86625254	1	WASHER, M12 x 28 x 2.5, 13.5 x 28 x 2.5 mm
29	355345A1	1	WASHER, Ribbed
30	86639031	1	BOLT, Hex, M12 x 45, 10.9, Full Thd, M12 x 45; 10.9, BSN RVS003801
31	9804277	1	NUT, M8 x 1.25, Flg, Cl 8,
	417916A2	1	COVER ASSY, Upper, Inc. 32 & 33, BSN RVS003801
	87412968	1	COVER ASSY, Armrest, Upper, w/ Decals, Inc. 33 & 34, ASN RVS003801
32	NSS	1	NOT SERVICED SEPARATELY, Housing, Upper, BSN RVS003801
33	410518A1	1	DECAL, Throttle and EH Levers
34	87412968	1	COVER ASSY, Upper, ASN RVS003801
35	277204A2	1	CUSHION,
36	86639117	4	SCREW, SELF TAPPING, Pan Hd, M4.2 x 16, M4,2 x 16
37	405227A1	1	HOUSING, Lower, Without Flex Control
37	435237A1	1	HOUSING, Lower, With Flex Control
38	86639294	6	SCREW, Hex Soc Hd, M4 x 20, 8.8, Socket, M4 x 20, With Flex Control
39	86624126	6	SCREW, Hex Soc Hd, M4 x 16, 8.8, Socket, M4 x 16; 8.8, Without Flex Control
40	86624179	6	WASHER, M4, 4,3 x 9 x 0,8 mm

09 -22 CONSOLE - RIGHT HAND ARMREST, ELECTRIC

ссылка	Номер детали	Кол-во	Описание
41	100012	4	NUT, M4, Cl 8,
42	331649A1	1	HOLDER, Cup
43	44334	4	SCREW, Cross Pan Hd, M4 x 12,
44	86598598	1	CLAMP, 3/4", Insul, 1/2" Bolt,
45	893-11004	6	WASHER, LOCK, Ext Tooth, M4,

09 -23 SEAT - NON-INSTRUCTIONAL

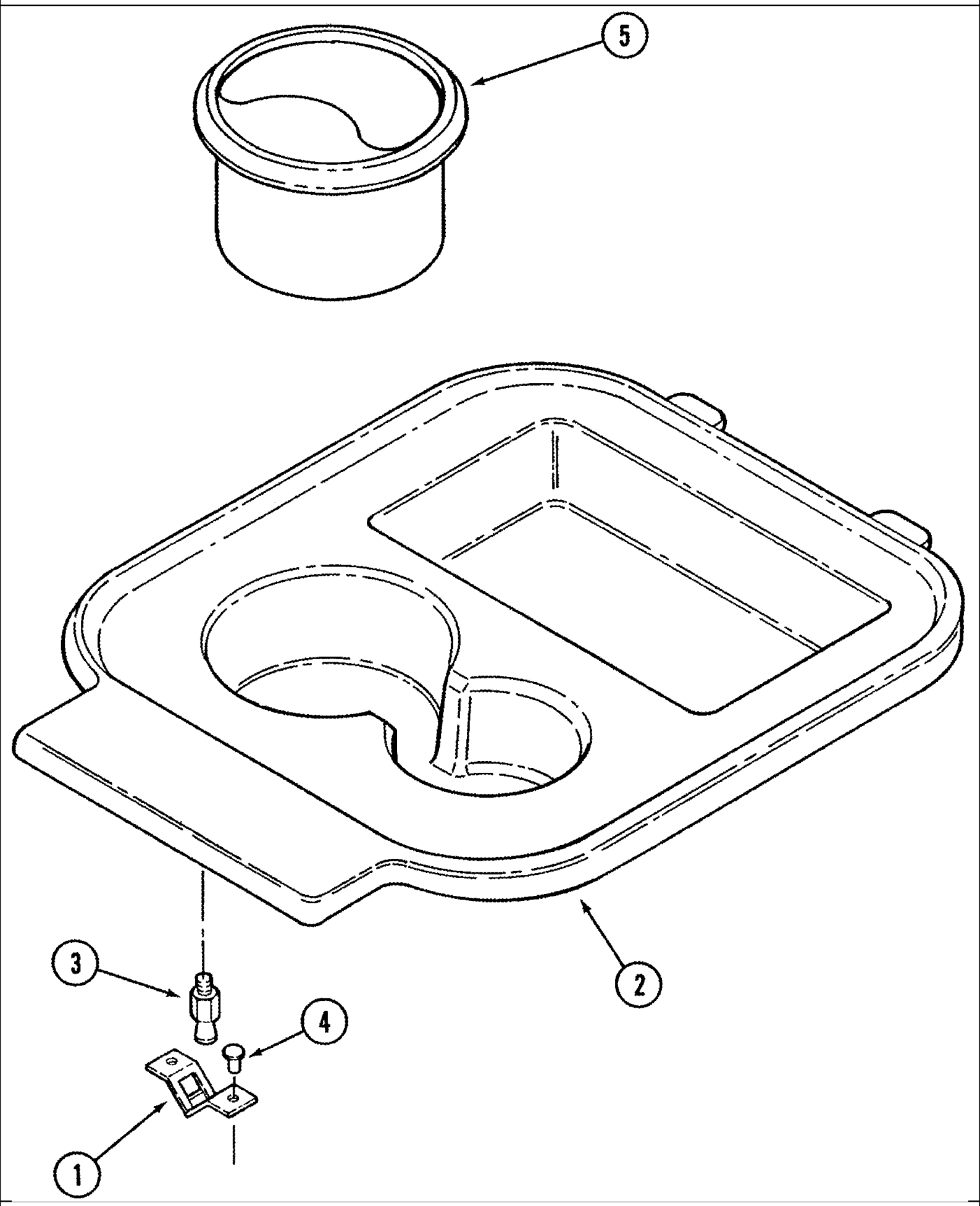

TJ375 TRACTOR - Chassis/Attachments

09 -23 SEAT - NON-INSTRUCTIONAL

ссылка	Номер детали	Кол-во	Описание
1	1961435C1	1	LATCH,
2	402710A1	1	TRAY,
3	1977929C1	1	STUD, Ball
4	86637656	2	RIVET, Pop, 1/8" x .337",
5	302456A1	1	ASH TRAY, If Used

09 -24 SEAT - INSTRUCTIONAL

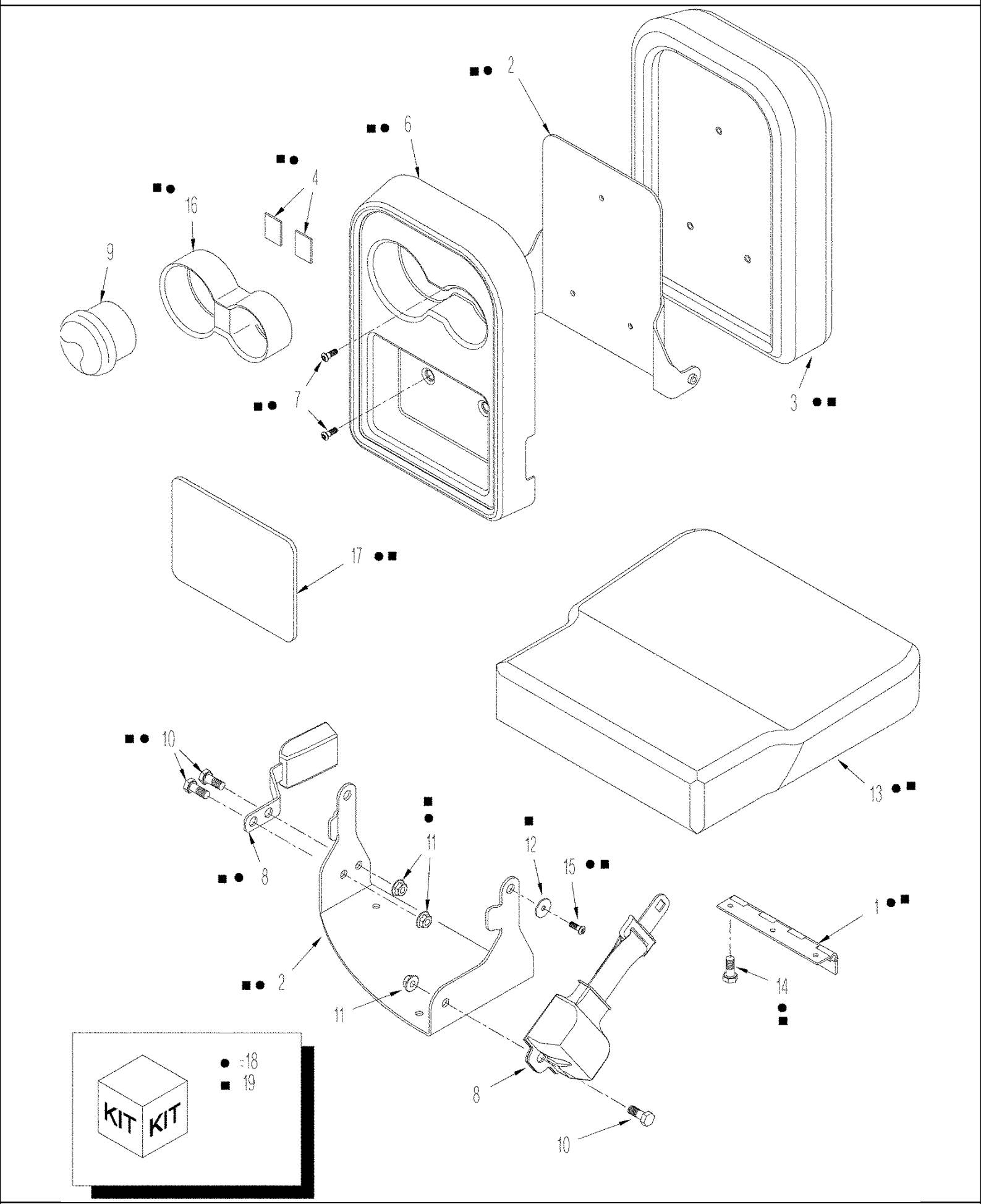

TJ375 TRACTOR - Chassis/Attachments

09 -24 SEAT - INSTRUCTIONAL

ссылка	Номер детали	Кол-во	Описание
1	365674A1	1	HINGE,
2	249707A2	1	BRACKET,
3	394995A1	1	CUSHION, Backrest, Cloth, BSN RVS001801
3	86990052	1	CUSHION, Backrest, Cloth, ASN RVS001801
3	86984296	1	CUSHION, SEAT, Backrest, Leather
4	406682A1	2	FASTENER,
5	252928A2	1	BRACKET,
6	395132A1	1	TRAY,
7	86511931	3	SCREW, Cross Pan Hd, 1/4"-20 x 5/8", 1/4 x 5/8
8	281926A2	1	BELT, Seat
9	302456A1	3	ASH TRAY, If Used
10	9846677	3	BOLT, Hex, M10 x 25, 10.9, Full Thd, Cap, HH, CL 10.9, M10 x 1.5 x 25
11	9804278	3	NUT, M10 x 1.5, Flg, Cl 8,
12	86624183	2	WASHER, M6 x 25 x 1.6,
13	394994A1	1	CUSHION, Seat, Cloth, BSN RVS001801
13	86990053	1	CUSHION, Seat, Cloth, ASN RVS001801
13	86984293	1	CUSHION, SEAT, Leather
14	281032	3	BOLT, Hex, 1/4"-20 x 3/4", G8, Full Thd, 1/4 x 3/4; 8
15	906051R1	2	SCREW, Hex Soc But Hd, M6 x 1 x 10, 12.9, 1/4 x 3/4
16	369635A2	1	HOLDER, Cup Holder
17	394828A1	1	PLATE, Tray
18	719528003	1	KIT, Instructional Seat, Cloth, BSN RVS0018001
19	719528013	1	KIT, Instructional Seat, Cloth, ASN RVS001801

09 -25 SEAT - OPERATORS

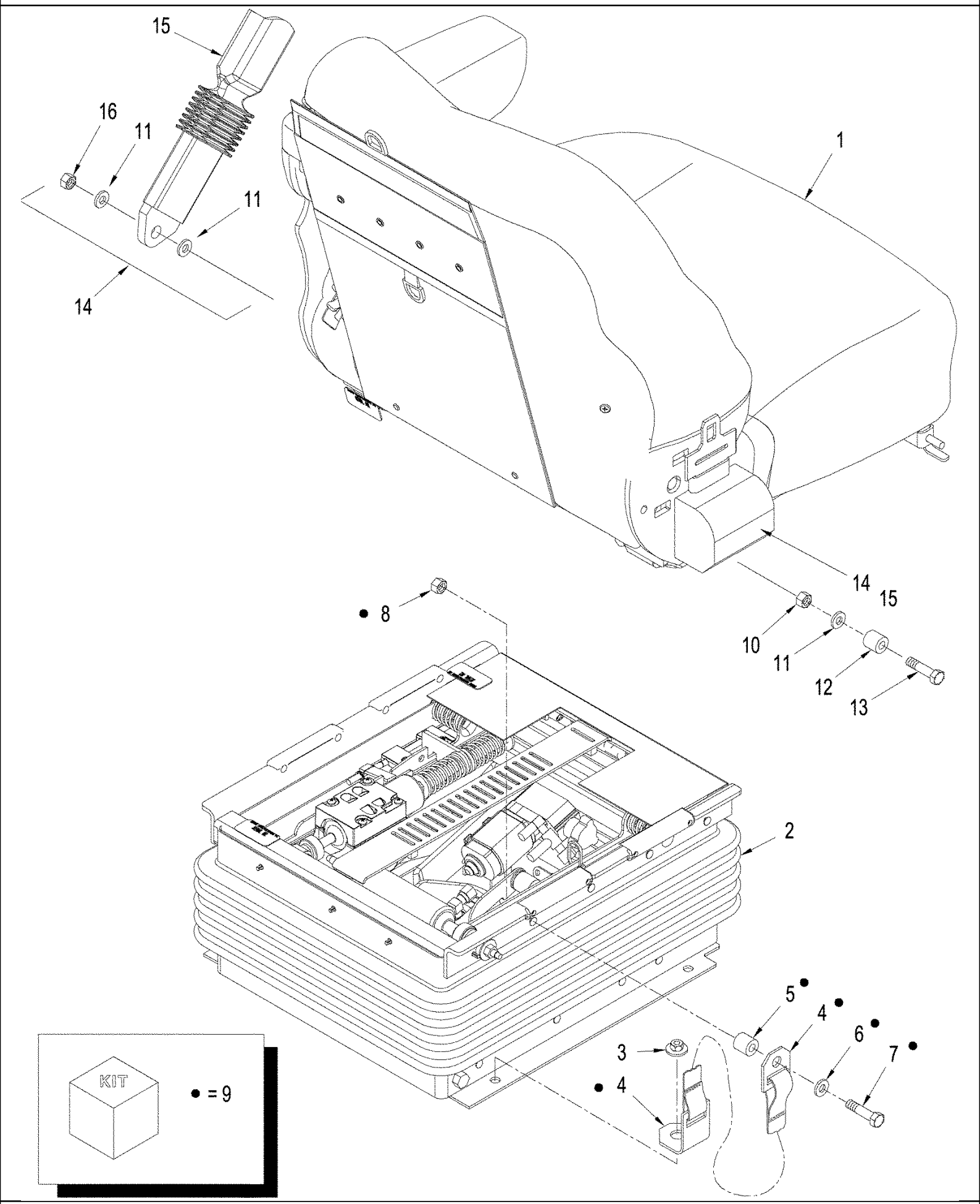

09 -25 SEAT - OPERATORS

ссылка	Номер детали	Кол-во	Описание
	402711A1	1	SEAT, Cloth, without Heat, Inc. 1, 2, 14, BSN RVS003801
	87453072	1	SEAT, DRIVER, Cloth, without Heat, Inc. 1, 3, 10 - 16, ASN RVS003801
	395603A1	1	SEAT, Cloth, Heated, Inc. 1, 2, 14, BSN RVS001801
	87439261	1	SEAT, Cloth, Heated, Inc. 1, 2, 14, BTW RVS001801 & RVS003801
	87453073	1	SEAT, DRIVER, Cloth, Heated, Inc. 1, 3, 10 - 16, ASN RVS003801
	403215A2	1	SEAT, Cloth, Heated, Semi-Active, Inc. 1, 2, 14, BTW RVS001801 & RVS003801
	87453074	1	SEAT, DRIVER, Cloth, Heated, Semi-Active, Inc. 1, 3, 10 - 16, ASN RVS003801
1	400165A1	1	SEAT ASSY., Cloth, without Heat, See Figure: 09-26, BSN RVS001801
1	87439260	1	SEAT, Cloth, without Heat, See Figure: 09-26, BTW RVS001801 & RVS003801
1	87453072	1	SEAT, DRIVER, Cloth, without Heat, See Figure: 09-26 (01), ASN RVS003801
1	400167A1	1	SEAT, Cloth, Heated, See Figure: 09-26, BSN RVS001801
1	87439261	1	SEAT, Cloth, Heated, See Figure: 09-26, BTW RVS001801 & RVS003801
1	87453073	1	SEAT, DRIVER, Cloth, Heated, See Figure: 09-26 (01), ASN RVS003801
1	403215A2	1	SEAT, Cloth, Heated, Semi-Active, See Figure: 09-26, BTW RVS001801 & RVS003801
1	87453074	1	SEAT, DRIVER, Cloth, Heated, See Figure: 09-26 (01), ASN RVS003801
2	374353A2	1	PACKAGE, SERVICE, See Figure: 09-27 (01), BSN RVS003801
2	87347887	1	KIT, SERVICE, Suspension, See Figure: 09-27 (01), ASN RVS003801
2	400184A1	1	KIT, Suspension, Semi-Active Seat, See Figure: 09-27 (02), BTW RVS001801 & RVS003801
2	87347886	1	SUSPENSION, Semi-Active Seat, See Figure: 09-27 (02), ASN RVS003801
3	9804277	4	NUT, M8 x 1.25, Flg, Cl 8,
4	389277A1	2	BELT, Tether, Used on Scrapper Models
5	NSS	2	NOT SERVICED SEPARATELY, Spacer, Used on Scrapper Models
6	87039401	2	WASHER, 13/32" x 13/16" x .134", HDN, 3/8" ID x 7/8" OD
7	86575418	2	BOLT, Hex, 3/8"-16 x 2 1/4", G8,
8	87039402	2	NUT, LOCK, 3/8"-16, GB, 3/8"
9	87431487	1	KIT, FIP, Tether Belt, Used on Scrapper Models
10	337475	1	NUT, M12, Cl 10,
11	86625255	3	WASHER, M13.5 x 24.5 x 3, HT, .500" x 1.25 " x .08" Thk
12	87313413	1	TUBE SPACER, Steel, .875" x .5"
13	87015314	1	BOLT, Hex, Lock, M12 x 40, Cl 10.9, Cap, HH, M12 x 40, CL10.9
14	333657A2	1	BELT, SAFETY, , BSN RVS003801
15	444877A1	1	SEAT BELT, , ASN RVS003801
16	806-12030	1	BOLT, Hex, Lock, M12 x 30, Cl 10.9, Cap, HH, M12 x 30, CL10.9

09 -26 SEAT - CUSHION ASSEMBLY, BSN RVS003801

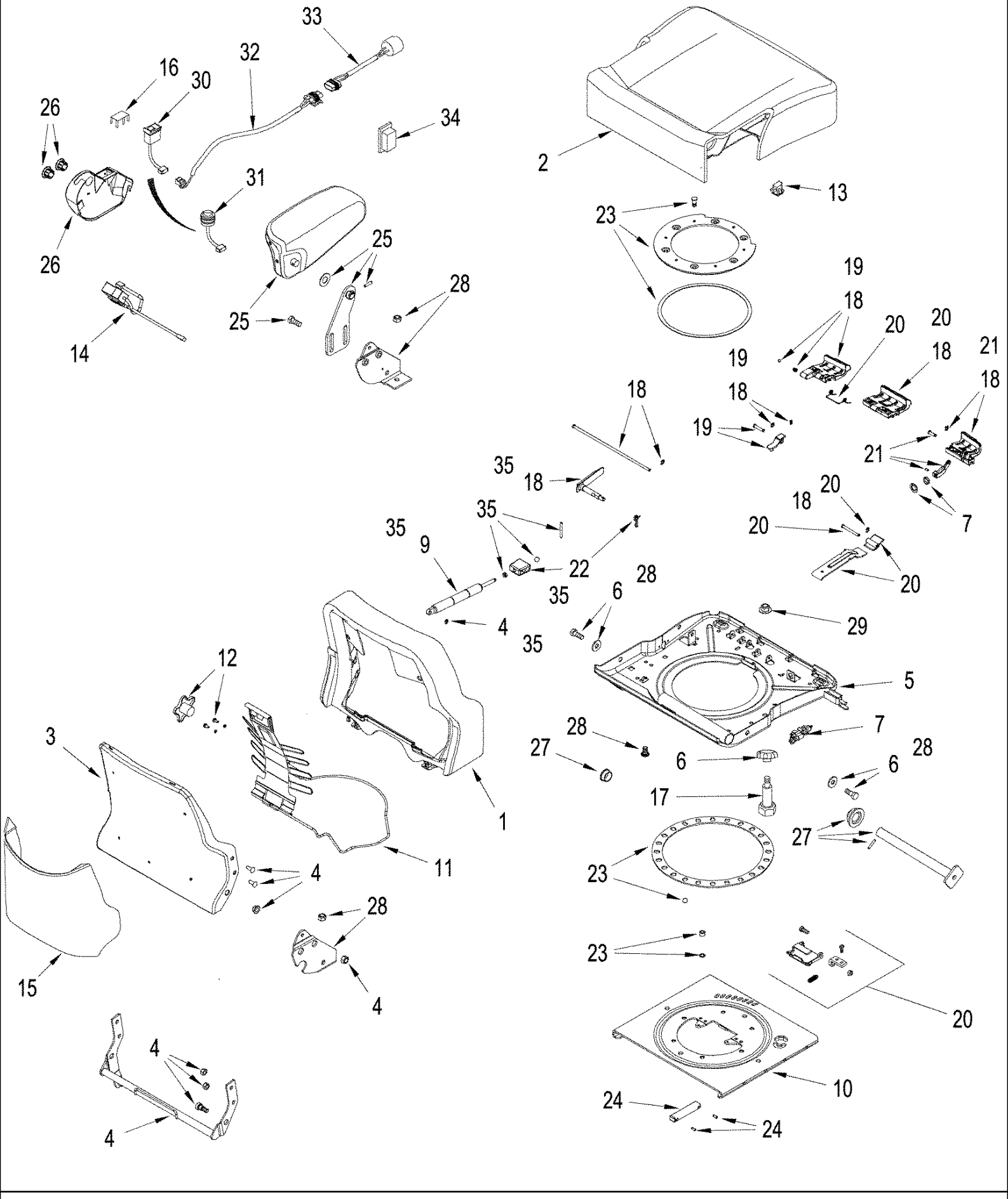

09 -26 SEAT - CUSHION ASSEMBLY, BSN RVS003801

ссылка	Номер детали	Кол-во	Описание
	400165A1	1	SEAT ASSY., Cloth, Without Heat, Inc. 1 - 12 & 15 - 25, Standard Cab, BSN RVS001801
	87439260	1	SEAT, Cloth, Without Heat, Inc. 1 - 12 & 15 - 25, Standard Cab, BTW RVS001801 & RVS003801
	400167A1	1	SEAT, Cloth, Heated, Inc. 1 - 12, 14, 15 & 17 - 35, Deluxe Cab, BSN RVS001801
	87439261	1	SEAT, Cloth, Heated, Inc. 1 - 15 & 17 - 35, Deluxe Cab, BTW RVS001801 & RVS003801
	403215A2	1	SEAT, Cloth, Heated, Semi-Active, Inc. 1 - 15 & 17 - 35, Deluxe Cab, BTW RVS001801 & RVS003801
1	400177A1	1	CUSHION, Backrest, Standard Cab, BSN RVS001801
1	86989481	1	CUSHION, Backrest, Standard Cab, ASN RVS001801
1	400178A1	1	CUSHION, Backrest, Deluxe Cab, BSN RVS001801
1	86989482	1	CUSHION, Backrest, Deluxe Cab, ASN RVS001801
1	86984292	1	CUSHION, SEAT, Backrest, Leather, This Option is not Included in the above Seat Assemblies. Order Separately.
2	400186A1	1	CUSHION, Seat, Cloth, without Heat, Standard Cab, BSN RVS001801
2	86989483	1	CUSHION, Seat, Cloth, without Heat, Standard Cab, ASN RVS001801
2	400187A1	1	CUSHION, Seat, Cloth, Heated, Deluxe Cab, BSN RVS001801
2	86989484	1	CUSHION, Seat, Cloth, Heated, Deluxe Cab, ASN RVS001801
2	86984291	1	CUSHION, SEAT, Leather, Heated, This Option is not Included in the above Seat Assemblies. Order Separately.
3	302005A1	1	PANEL, Backrest
4	359959A1	1	TUBE, Torque Tube
5	375224A2	1	PAN,
6	86512499	1	NUT, M20 x 2.5, Flg, Cl 10,
7	1981852C3	1	SWITCH, Air Control
9	302004A2	1	SHOCK ABSORBER,
10	302001A1	1	PLATE, Swivel Lower
11	333104A2	1	SUPPORT, Lumbar, Inc. 12
12	374387A1	1	PACKAGE, SERVICE, Lumbar
13	333107A1	1	SWITCH, Operators Presence
14	302011A1	1	HARNESS, Temperature, BSN RVS001801
14	87407046	1	HARNESS, Temperature, ASN RVS001801
15	333108A2	1	CASE, Backrest
16	389718A1	1	KIT, Without Heater, BSN RVS001801
16	375200A1	1	PLUG, Without Heater, ASN RVS001801
17	86639024	1	SCREW, Hex Soc, Shoulder, M10 12 X 30mm, Cl12.9, Shoulder, M10 x 30
18	373463A1	1	PACKAGE, SERVICE, Seat Knob
19	373464A1	1	PACKAGE, SERVICE, Swivel Control
20	373465A1	1	PACKAGE, SERVICE, Fore / Aft Slide Control
21	373466A1	1	PACKAGE, SERVICE, Height Control
22	87331275	1	PACKAGE, SERVICE, Recliner Block & Pin
23	391414A1	1	PACKAGE, SERVICE, Swivel
24	302016A1	1	PACKAGE, SERVICE, Slide Pucks
25	361044A1	1	PACKAGE, SERVICE, Armrest, Left-Hand, Cloth
26	374386A1	1	PACKAGE, SERVICE, Heater Switch Cover, BSN RVS003801
26	389718A1	1	KIT, Heater Switch Cover, ASN RVS001801
27	359951A1	1	PACKAGE, SERVICE, Console Mount
28	359950A1	1	PACKAGE, SERVICE, Side Brackets

09 -26 SEAT - CUSHION ASSEMBLY, BSN RVS003801

ссылка	Номер детали	Кол-во	Описание
29	9804278	1	NUT, M10 x 1.5, Flg, Cl 8,
	383593A1	1	HARNESS, Heater Harness, Complete, Inc. 30 - 33
30	381151A1	1	SWITCH, Heater Control, Rectangular Rocker, BSN RVS001801
31	87407048	1	SWITCH, Heater Control, Semi-Active Seat, Round Rocker, ASN RVS001801
32	381152A1	1	HARNESS, Heater, Center Section
33	381201A1	1	HARNESS, Heater, Resistor
34	87347940	1	KIT, SERVICE, Switch, Height Adjustment
35	87331408	1	PACKAGE, SERVICE, Recliner Control

09 -26(01) SEAT - CUSHION ASSEMBLY, ASN RVS003801

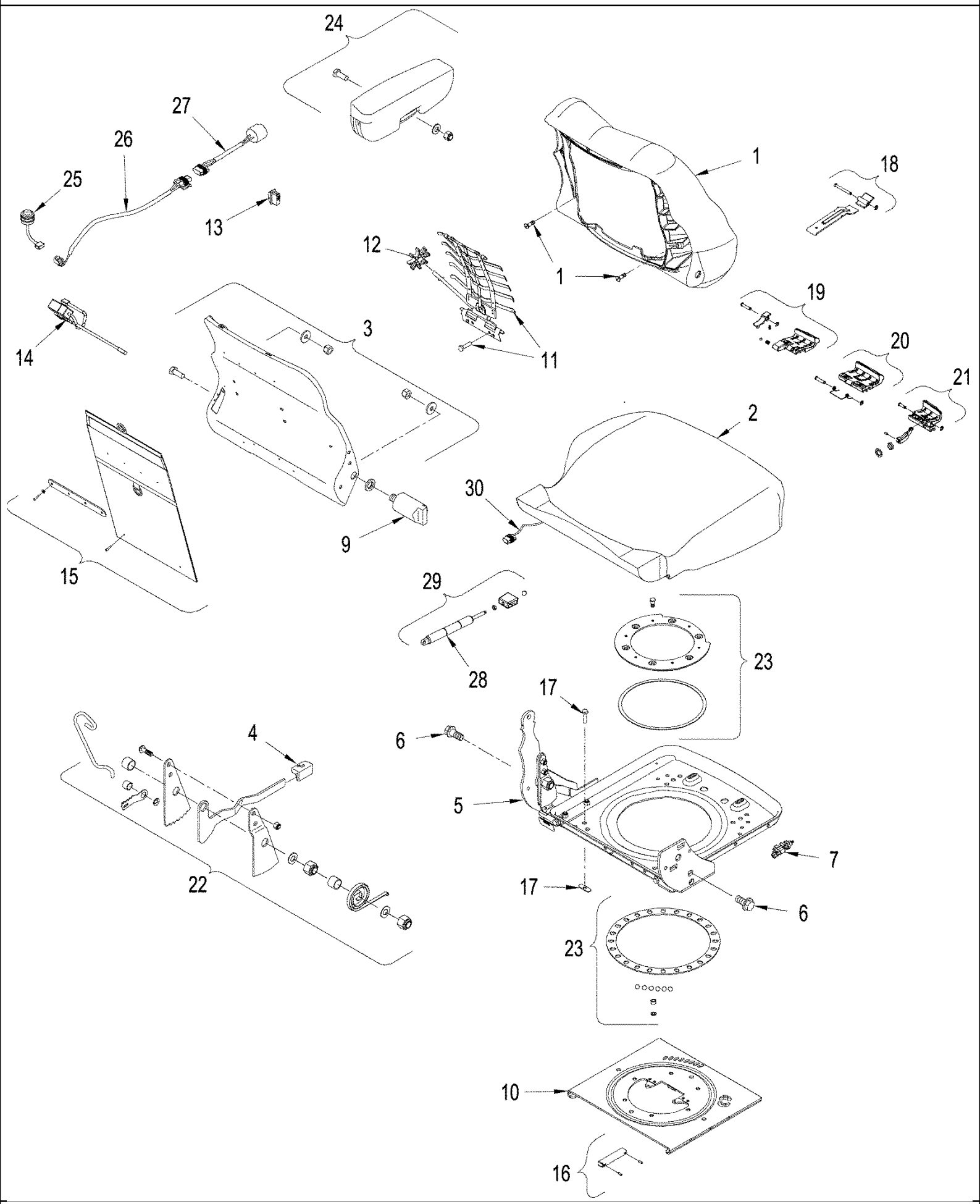

09 -26(01) SEAT - CUSHION ASSEMBLY, ASN RVS003801

ссылка	Номер детали	Кол-во	Описание
	87453072	1	SEAT, DRIVER, Cloth, without Heat, Inc. 1 - 12, 15 - 25, Standard Cab
	87453073	1	SEAT, DRIVER, Cloth, Heated, Inc. 1 - 12, 14, 15, 17 - 29, Deluxe Cab
	87453074	1	SEAT, DRIVER, Cloth, Heated, Semi-Active, Inc. 1 - 29, Deluxe Cab
1	86994150	1	SEAT ASSY., Backrest, Cloth, without Heat, Inc. 30, Standard Cab
1	87347888	1	SEAT, BACK, Cloth, Heated, Inc. 30, Deluxe Cab
1	86984292	1	CUSHION, SEAT, Backrest, Leather, This Option is not Included in the above Seat Assemblies. Order Separately.
2	86994151	1	SEAT ASSY., Seat, Cloth, without Heat, Standard Cab
2	86994249	1	KIT, SERVICE, Seat, Cloth, Heated, Deluxe Cab
2	86984291	1	CUSHION, SEAT, Leather, Heated, This Option is not Included in the above Seat Assemblies. Order Separately.
3	86994155	1	ASSEMBLY, Backrest
5	NSS	1	NOT SERVICED SEPARATELY, Pan, Seat
6	86512499	1	NUT, M20 x 2.5, Flg, Cl 10, Flg, CL 10, M12
7	1981852C3	1	SWITCH, Air Control
9	359951A1	1	PACKAGE, SERVICE, Console Mount
10	87347956	1	KIT, SERVICE, Swivel Lower
11	87308130	1	SEAT BACK ADJUST. DEVICE, Lumbar, Inc. 12
12	87037462	1	SEAT BACK ADJUST. DEVICE, Lumbar
13	87347958	1	KIT, SERVICE, Operators Presence, Semi-Active Seat, Deluxe Cab
14	87407046	1	HARNESS, Temperature
15	87432355	1	POCKET, Backrest
16	302016A1	1	PACKAGE, SERVICE, Slide Pucks
17	86639024	1	SCREW, Hex Soc, Shoulder, M10 12 X 30mm, Cl12.9, Shoulder, M10 x 30
18	87347934	1	LATCH, Seat Slide
19	87347942	1	KIT, SERVICE, Swivel Control
20	87347941	1	KIT, SERVICE, Fore / Aft Slide Control, Deluxe Cab
21	373466A1	1	PACKAGE, SERVICE, Height Control
22	86994165	1	SEAT ACCESSORY, Recliner Control
23	86994166	1	ASSEMBLY, Swivel, Standard Cab
23	87347936	1	KIT, SERVICE, Swivel, Deluxe Cab
24	87347939	1	KIT, SERVICE, Armrest, Left-Hand, Cloth, without Heat, Standard Cab
24	86994250	1	ASSEMBLY, Armrest, Left-Hand, Cloth, Heated
25	87407048	1	SWITCH, Heater Control, Semi-Active Seat, Round Rocker, ASN RVS001801
26	381152A1	1	HARNESS, Heater, Center Section
27	381201A1	1	HARNESS, Heater, Resistor
28	302004A2	1	SHOCK ABSORBER, Gas Cylinder
29	87331275	1	PACKAGE, SERVICE, Recliner Block, Inc. 4
30	NSS	1	NOT SERVICED SEPARATELY, Switch, Operators Pressence

09 -27(01) SEAT - SUSPENSION

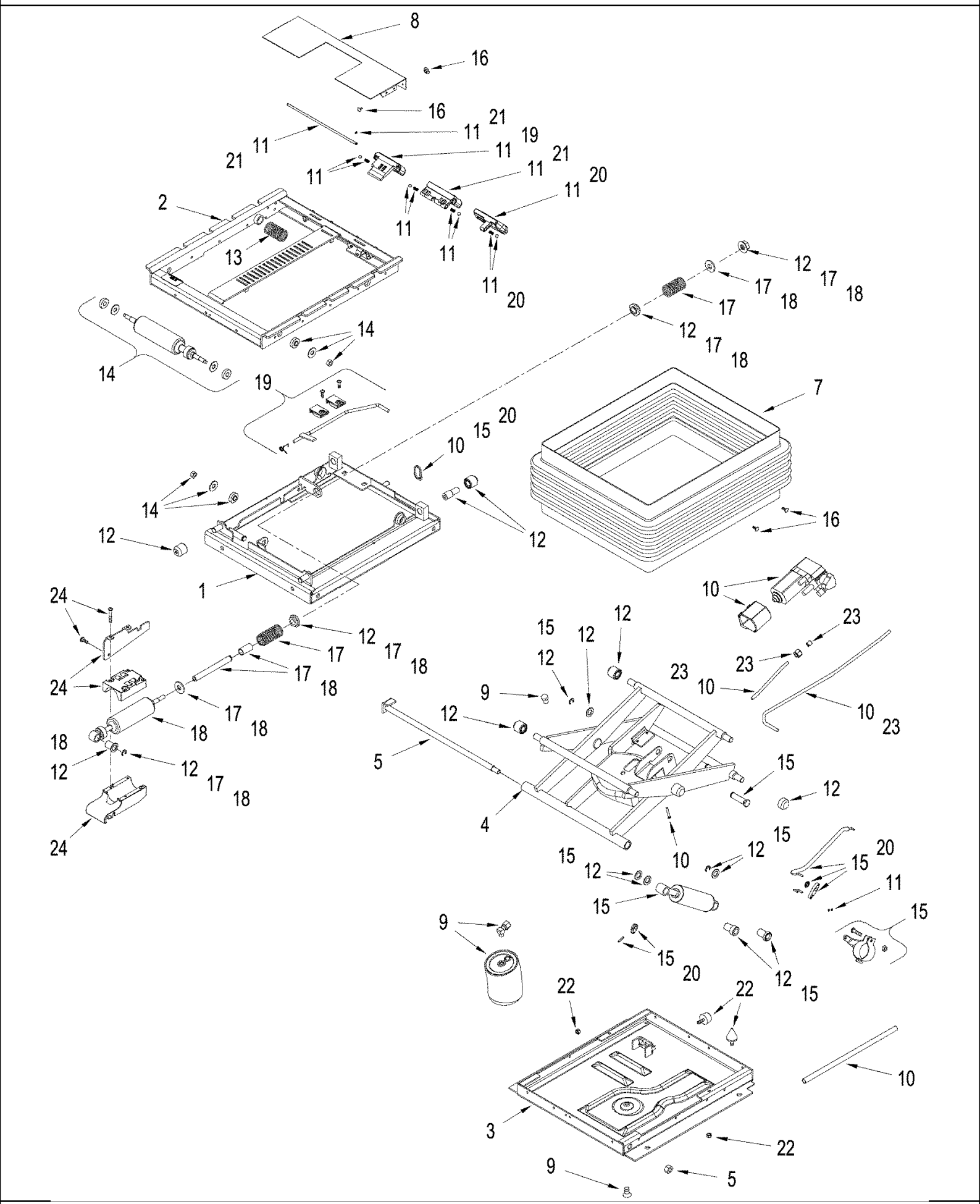

ссылка	Номер детали	Кол-во	Описание
	374353A2	1	PACKAGE, SERVICE, Inc. 1 - 25, BSN RVS003801
	87347887	1	KIT, SERVICE, Suspension, Inc. 1 - 25, Standard Cab, ASN RVS003801
	87347885	1	KIT, SERVICE, Suspension, Inc. 1 - 25, Deluxe Cab, ASN RVS003801
1	333273A1	1	HOUSING, Upper, BSN RVS003801
1	87395393	1	HOUSING, Upper Lateral Isolator, ASN RVS003801
2	333274A2	1	ISOLATOR, Lateral Track, BSN RVS003801
2	87595392	1	Lateral Isolator Track, ASN RVS003801
3	333275A1	1	HOUSING, Lower
4	333276A1	1	ARM,
5	302033A1	1	SHAFT,
6	302027A1	1	HARNESS, Suspension, Not Illustrated, BSN RVS003801
6	87347964	1	KIT, SERVICE, Suspension Harness, Not Illustrated, Standard Cab, ASN RVS003801
6	87347944	1	KIT, SERVICE, Suspension Harness, Not Illustrated, Deluxe Cab, ASN RVS003801
7	333278A1	1	BOOT, , BSN RVS003801
7	87347962	1	KIT, SERVICE, Boot, Standard Cab, ASN RVS003801
7	87347943	1	KIT, SERVICE, Boot, Deluxe Cab, ASN RVS003801
8	302029A2	1	PLATE, Cover
9	333279A1	1	PACKAGE, SERVICE, Air Spring, BSN RVS003801
9	87347971	1	KIT, SERVICE, Air Spring, Standard Cab, ASN RVS003801
9	333279A2	1	KIT, Air Spring, Deluxe Cab, ASN RVS003801
10	333280A2	1	KIT, Air Compressor, BSN RVS003801
10	87347970	1	KIT, SERVICE, Air Compressor, Standard Cab, ASN RVS003801
10	87347951	1	KIT, SERVICE, Air Compressor, Deluxe Cab, ASN RVS003801
11	373469A1	1	PACKAGE, SERVICE, Suspension Knob
12	333283A2	1	PACKAGE, SERVICE, Suspension Bearing And Rollers
13	333284A1	1	PACKAGE, SERVICE, Lateral Isolator Spring
14	333285A1	1	PACKAGE, SERVICE, Lateral Isolator Shock Absorber
15	333286A1	1	PACKAGE, SERVICE, Suspension Shock Absorber
16	333659A1	1	PACKAGE, SERVICE, Boot Pin, BSN RVS003801
16	87347976	1	KIT, SERVICE, Boot Pin, Standard Cab, ASN RVS003801
16	333659A2	1	Boot Pin, Deluxe Cab, ASN RVS003801
17	333287A2	1	PACKAGE, SERVICE, Fore and Aft Isolator Spring
18	333288A2	1	PACKAGE, SERVICE, Fore and Aft Shock Absorber
19	373470A2	1	PACKAGE, SERVICE, Fore and Aft Isolator Control, BSN RVS003801
19	87347974	1	KIT, SERVICE, Fore / Aft Isolation Control, Standard Cab, ASN RVS003801
19	373470A2	1	PACKAGE, SERVICE, Fore / Aft Isolation Control, Deluxe Cab, ASN RVS003801
20	447956A1	1	PACKAGE, SERVICE, Suspension Shock Absorber Control
21	373473A1	1	PACKAGE, SERVICE, Lateral Isolator Control
22	333295A1	1	PACKAGE, SERVICE, Suspension Bumper, BSN RVS003801
22	180593A1	1	KIT, Suspension Bumper, Standard Cab, ASN RVS003801
22	333295A1	1	PACKAGE, SERVICE, Suspension Bumper, Deluxe Cab, ASN RVS003801
23	333660A1	1	PACKAGE, SERVICE, Shock Cable, BSN RVS003801
23	87347955	1	CABLE, Shock, Deluxe Cab, ASN RVS003801
24	333296A1	1	PACKAGE, SERVICE, Fore and Aft Isolator Shock Block

TJ375 TRACTOR - Chassis/Attachments

09 -27(02) SEAT - SEMI ACTIVE SUSPENSION ASSEMBLY, ASN RVS001801

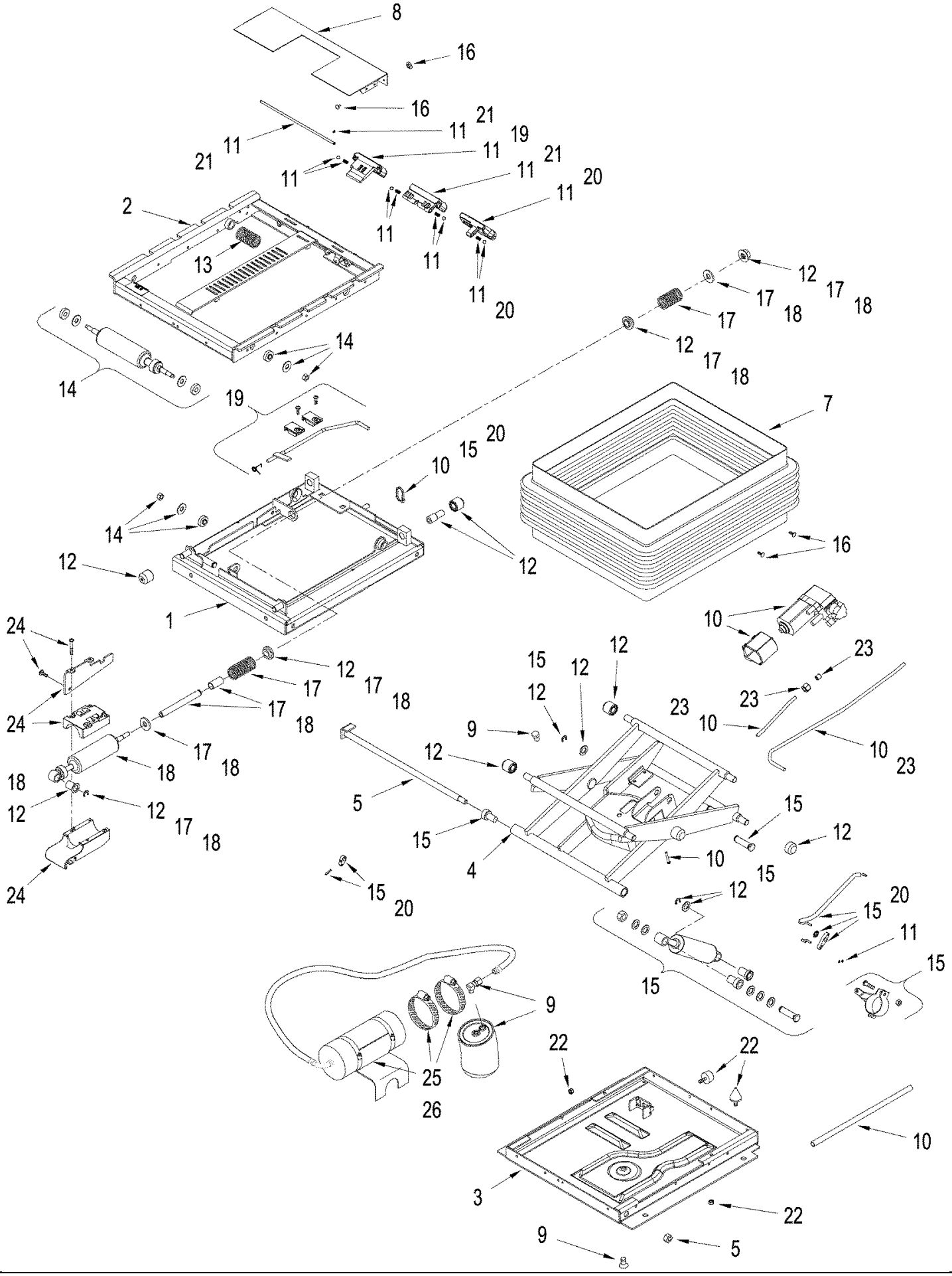

09 -27(02) SEAT - SEMI ACTIVE SUSPENSION ASSEMBLY, ASN RVS001801

ссылка	Номер детали	Кол-во	Описание
	400184A1	1	KIT, Suspension, Inc. 1 - 25, BSN RVS003801
	87347886	1	SUSPENSION, Inc. 1 - 25, ASN RVS003801
1	333273A1	1	HOUSING, Upper
2	333274A2	1	ISOLATOR, Later Track
3	86994256	1	HOUSING, Lower
4	86994258	1	ARM, Suspension
5	302033A1	1	SHAFT, Bearing
6	86994269	1	HARNESS, WIRE, Suspension, Not Illustrated, BSN RVS003801
6	87347944	1	KIT, SERVICE, Suspension Harness, Not Illustrated, ASN RVS003801
7	333278A1	1	BOOT, , BSN RVS003801
7	87347943	1	KIT, SERVICE, Boot, ASN RVS003801
8	302029A2	1	PLATE, Cover
9	86994203	1	KIT, SERVICE, Air Spring, BSN RVS003801
9	333279A2	1	KIT, Air Spring, ASN RVS003801
10	87407038	1	KIT, SERVICE, Air Compressor, BSN RVS003801
10	87347952	1	KIT, SERVICE, Air Compressor, ASN RVS003801
11	87407047	1	KIT, SERVICE, Suspension Knobs
12	333283A2	1	PACKAGE, SERVICE, Suspension Bearing and Rollers
13	333284A1	1	PACKAGE, SERVICE, Lateral Isolator Spring
14	333285A1	1	PACKAGE, SERVICE, Lateral Isolator Shock Absorber
15	86994260	1	KIT, SERVICE, Suspension Shock
16	333659A1	1	PACKAGE, SERVICE, Boot Pin
17	333287A2	1	PACKAGE, SERVICE, Fore and Aft Isolator Spring
18	333288A2	1	PACKAGE, SERVICE, Fore and Aft Shock Absorber
19	373470A2	1	PACKAGE, SERVICE, Fore and Aft Isolator Control
20	87440465	1	KIT, SERVICE, Shock Absorber Control
21	373473A1	1	PACKAGE, SERVICE, Lateral Isolator Control
22	333295A1	1	PACKAGE, SERVICE, Suspension Bumper
23	374359A1	1	PACKAGE, SERVICE, Suspension Shock Cable
24	333296A1	1	PACKAGE, SERVICE, Fore and Aft Isolator Shock Block
25	87435206	1	KIT, Air Tank, BSN RVS003801
25	87347960	1	KIT, SERVICE, Air Tank, ASN RVS003801
26	86994268	1	KIT, SERVICE, Air Tank, ASN RVS003801

TJ375 TRACTOR - Chassis/Attachments

09 -28 MIRRORS

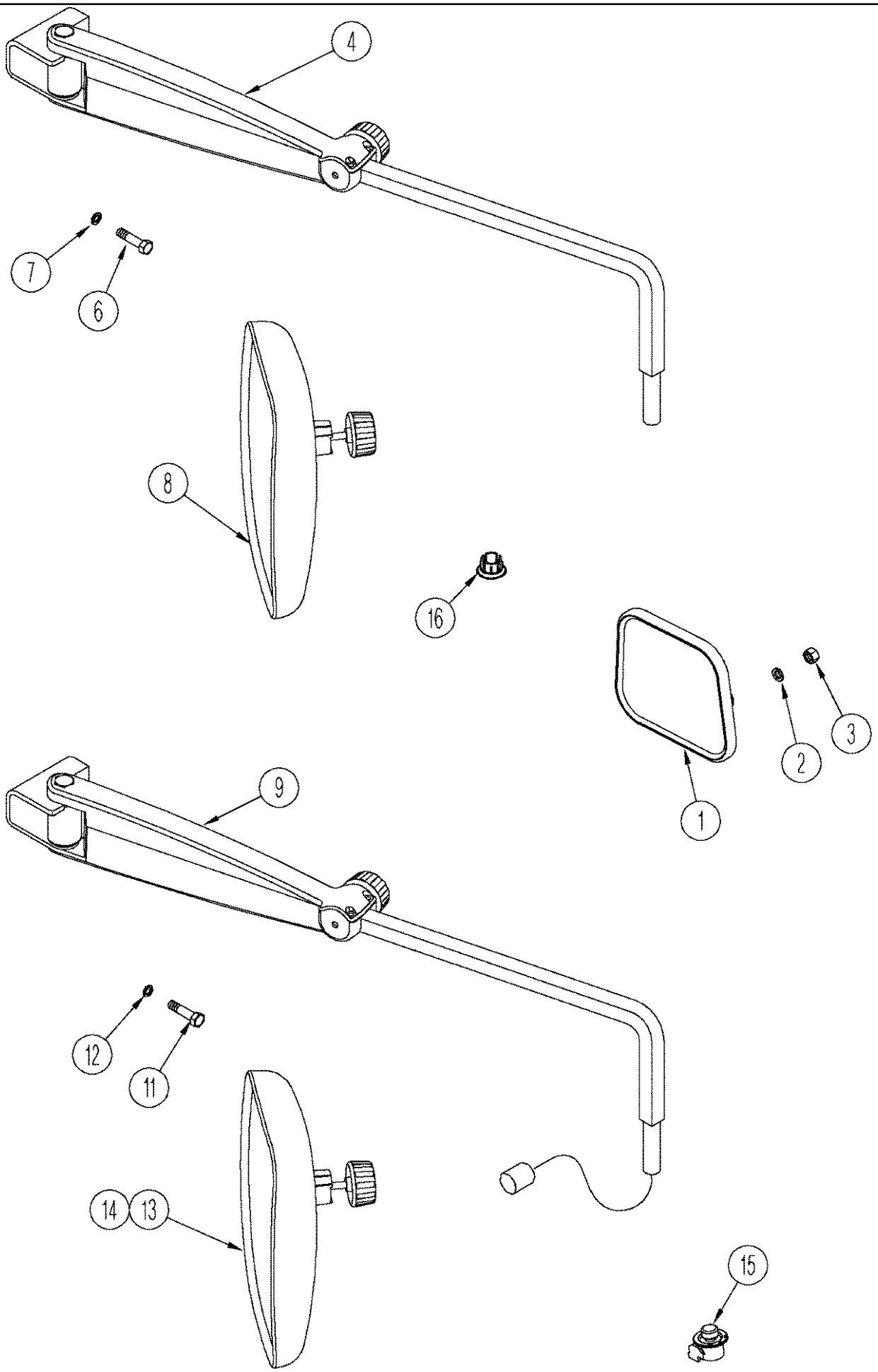

TJ375 TRACTOR - Chassis/Attachments

09 -28 MIRRORS

ссылка	Номер детали	Кол-во	Описание
1	A177462	1	MIRROR, Interior, Inc. 2, 3
2	85700573	1	WASHER, LOCK, Ext Tooth, M6,
3	86642419	1	PIN, LOCK, 1/4 NF
4	313139A1	1	ARM, Manual, RH
5	313140A1	1	ARM, Manual, Not Illustrated
6	514-865	4	BOLT, Hex, M12 x 80, 10.9, M12 x 80; 10.9
7	86639330	4	WASHER, M12 x 24.5 x 3, HT, 13.5 x 24 x 3 mm
8	365414A1	2	MIRROR, Manual
9	313141A1	1	ARM, RH, Electric
10	313142A1	1	ARM, LH, Electric, Not Illustrated
11	412065	4	PIN, M12 x 80; 10.9
12	86639330	4	WASHER, M12 x 24.5 x 3, HT, 13.5 x 24 x 3 mm
13	360580A1	2	MIRROR, Electric, Inc. 14
14	324437A1	1	MIRROR, REPLACEMENT, Glass
15	280627A1	1	SWITCH,
16	280628A1	1	PLUG,

09 -29 MONITOR MOUNTING

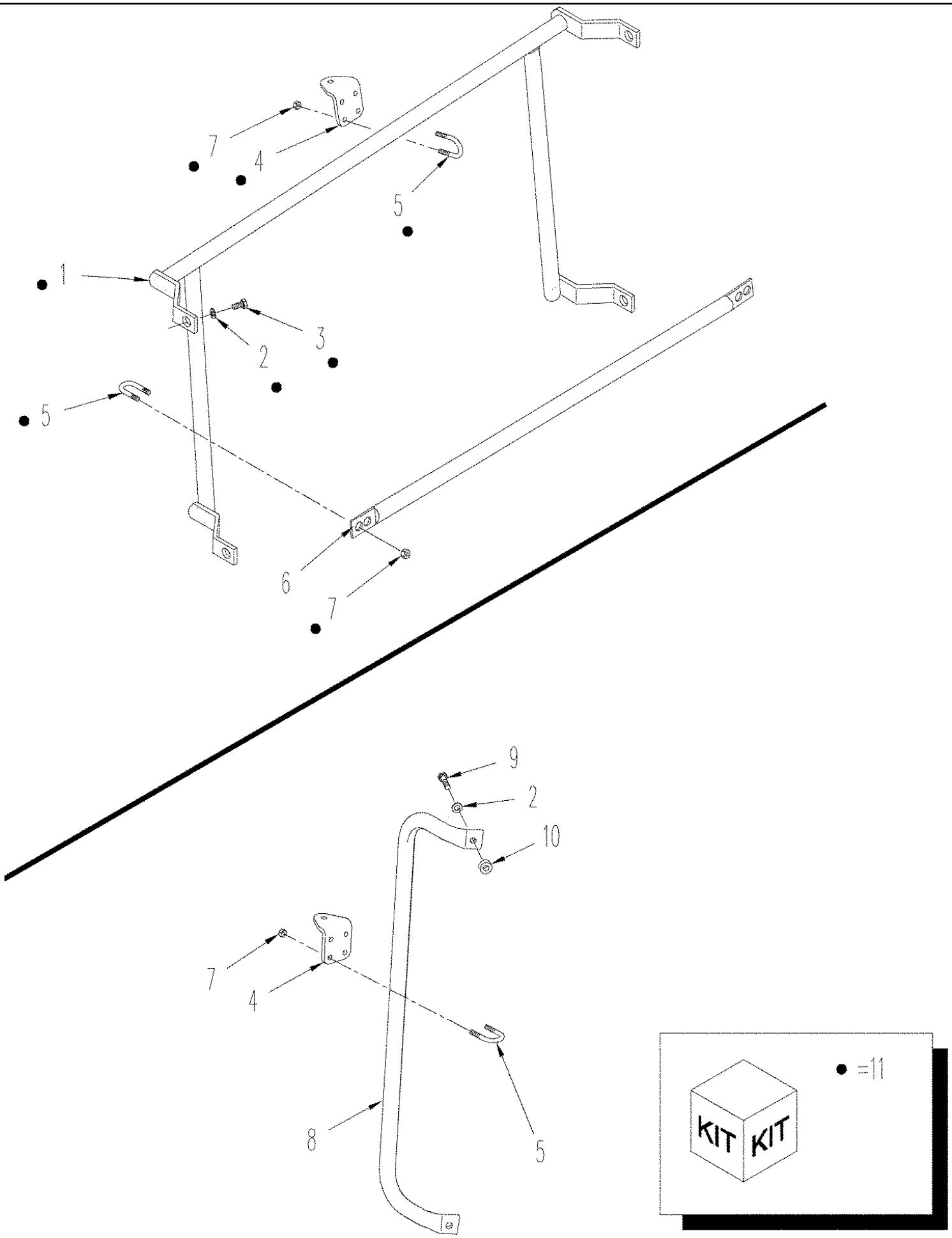

TJ375 TRACTOR - Chassis/Attachments

09 -29 MONITOR MOUNTING

ссылка	Номер детали	Кол-во	Описание
1	409391A2	1	MOUNTING PARTS, Window Monitor, RH
2	86624184	6	WASHER, M8 x 16 x 1.6, 9 x 17 x 1.6 mm
3	43234	4	BOLT, Hex, M8 x 25, 10.9, Cap, HH, CL 10.9, M8 x 1.25 x 25
4	87530660	3	MOUNTING PARTS, Angle, Window
5	87526197	4	U-BOLT, 1/4", Inc. Nut
6	443908A1	1	TUBE, Mounting
7	7770	12	NUT, 1/4"-20, G5, 5
8	369275A1	1	TUBE, A-Post Monitor
9	9780069	2	BOLT, Hex, M8 x 40, 10.9, M8 x 35; 10.9
10	371838A1	2	SPACER,
11	719516003	1	KIT, Window Monitor, RH, Inc. 1 - 5, 7

09 -30 FRONT FRAME

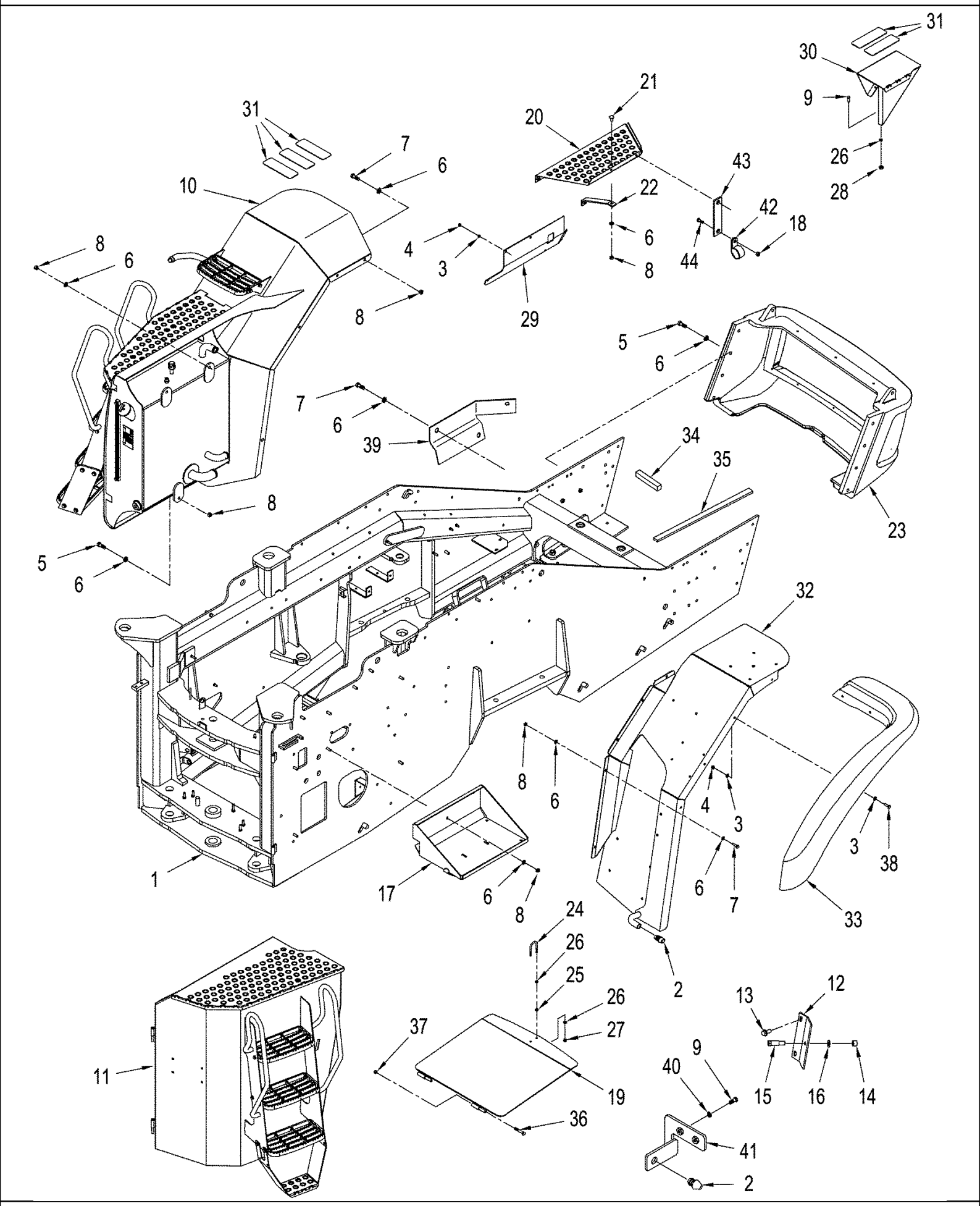

TJ375 TRACTOR - Chassis/Attachments

09 -30 FRONT FRAME

ссылка	Номер детали	Кол-во	Описание
1	400683A3	1	FRAME, , BSN RVS002701
1	87416214	1	FRAME ASSY, , ASN RVS002701
2	363226A1	2	BUMPER,
3	86625253	28	WASHER, M11 x 24 x 2, 11 x 24 x 2 mm
4	86500689	6	NUT, M10, Cl 10, M10; 10.9
5	337563	9	BOLT, Hex, M12 x 40, 10.9, Full Thd, Cap, HH, CL 10.9, M12 x 1.75 x 40
6	86625255	33	WASHER, M13.5 x 24.5 x 3, HT,
7	9824642	15	BOLT, Hex, M12 x 35, 10.9,
8	337475	24	NUT, M12, Cl 10,
9	43234	2	BOLT, Hex, M8 x 25, 10.9, Cap, HH, CL 10.9, M8 x 1.25 x 25
10	NSS	1	NOT SERVICED SEPARATELY, Tank Assy, See Figure(s) : 08-21
11	NSS	1	NOT SERVICED SEPARATELY, Door Assy, RH, See Figure(s) : 09-31 & 09-31 (01)
12	401396A1	1	BRACKET, Striker, RH
13	274251	2	BOLT, Hex Serr Flg, M10 x 25,
14	86637939	1	NUT, 7/16; 8
15	328534A1	1	BOLT,
16	86637952	1	WASHER, 11 x 20 x 2.0 mm
17	419848A1	1	TRAY, Battery, BSN RVS002701
17	87407446	1	TRAY, BATTERY, , ASN RVS002701
18	43362	1	NUT, M8, Cl 10,
19	406316A1	1	COVER, Door, Access
20	427244A1	1	STEP,
21	374895	1	BOLT, CARRIAGE, Short NK, M12 x 25, Cl8.8, Full Thd,
22	426892A1	1	GUSSET,
23	413470A1	1	BUMPER, See Figure(s) : 09-33
24	435422A1	1	U-BOLT,
25	86637931	2	NUT, Jam, 5/16"-18, G5, 5/16
26	86624184	8	WASHER, M8 x 16 x 1.6, 9 x 17 x 1.6 mm
27	86050277	2	NUT, LOCK, 5/16"-18, GB, Lock, GB, 5/16"-18
28	43362	8	NUT, M8, Cl 10,
29	419631A2	1	PANEL, Harness Mounting
30	427357A1	1	STEP, With Fender
31	D55216	5	PAD, 2 x 9 in, Anti-Skid
32	418972A1	1	FENDER, RH, BSN RVS002701
32	87428825	1	FENDER, RH, ASN RVS002701
33	397308A3	1	FENDER, Flare, RH, Front
34	396412A1	2	STRIP, RUBBER,
35	328197A1	2	SEAL, Foam
36	86639151	1	BOLT, Hex, M12 x 120, 10.9, M12 x 120; 10.9
37	412126	1	NUT, LOCK, M12 x 1.75, Cl 8,
38	86624978	6	BOLT, Hex, M10 x 35, 10.9, Full Thd,
39	418979A1	1	PANEL, Harness Mounting
40	87419179	1	BRACKET, Door Stop
41	86624185	1	WASHER, M8 x 17.5 x 2, HT, 9 x 17 x 2 mm
42	86639005	1	CLAMP, 5/8", Insul, 1/2" Bolt,

09 -30 FRONT FRAME

ссылка	Номер детали	Кол-во	Описание
43	87435634	1	BRACKET, HVAC
44	43234	1	BOLT, Hex, M8 x 25, 10.9, Cap, HH, M8 x 25, CL10.9

09 -31 BATTERY DOOR

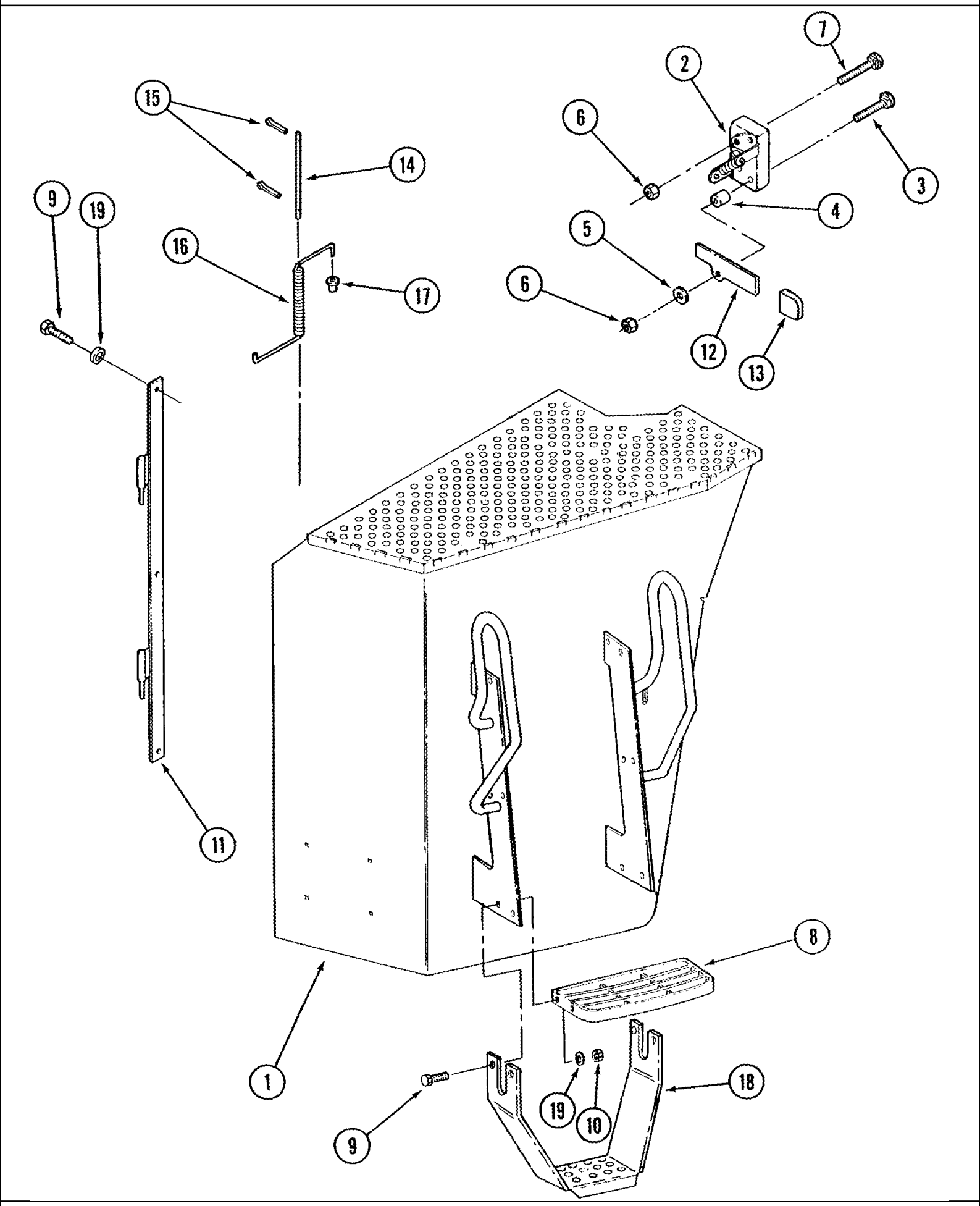

TJ375 TRACTOR - Chassis/Attachments

09 -31 BATTERY DOOR

ссылка	Номер детали	Кол-во	Описание
1	87422572	1	COVER ASSY,
2	318159A1	1	LATCH,
3	86639147	1	BOLT, CARRIAGE, Short NK, M6 x 70, Cl8.8, Carriage, M6 x 70; 8.8
4	431190A1	1	SPACER,
5	86624183	1	WASHER, M6 x 25 x 1.6,
6	353308	4	NUT, LOCK, M6 x 1, Cl 8,
7	86639146	3	BOLT, CARRIAGE, Short NK, M6 x 35, Cl8.8, Full Thd,
8	87301185	3	STEP,
9	86624978	15	BOLT, Hex, M10 x 35, 10.9, Full Thd,
10	86514720	12	NUT, LOCK, M10 x 1.5
11	450547A1	1	HINGE,
12	409467A1	1	HANDLE, Latch
13	435479A1	1	CAP,
14	324191A2	1	ROD, Support
15	130005	2	PIN, SPLIT (COTTER), M3.2 x 32,
16	333976A3	1	SPRING,
17	325371A2	1	BEARING, Cap
18	401176A1	1	STEP, Lower
19	86624176	15	WASHER, M10 x 20 x 2, M10

TJ375 TRACTOR - Chassis/Attachments

09 -33 BUMPER

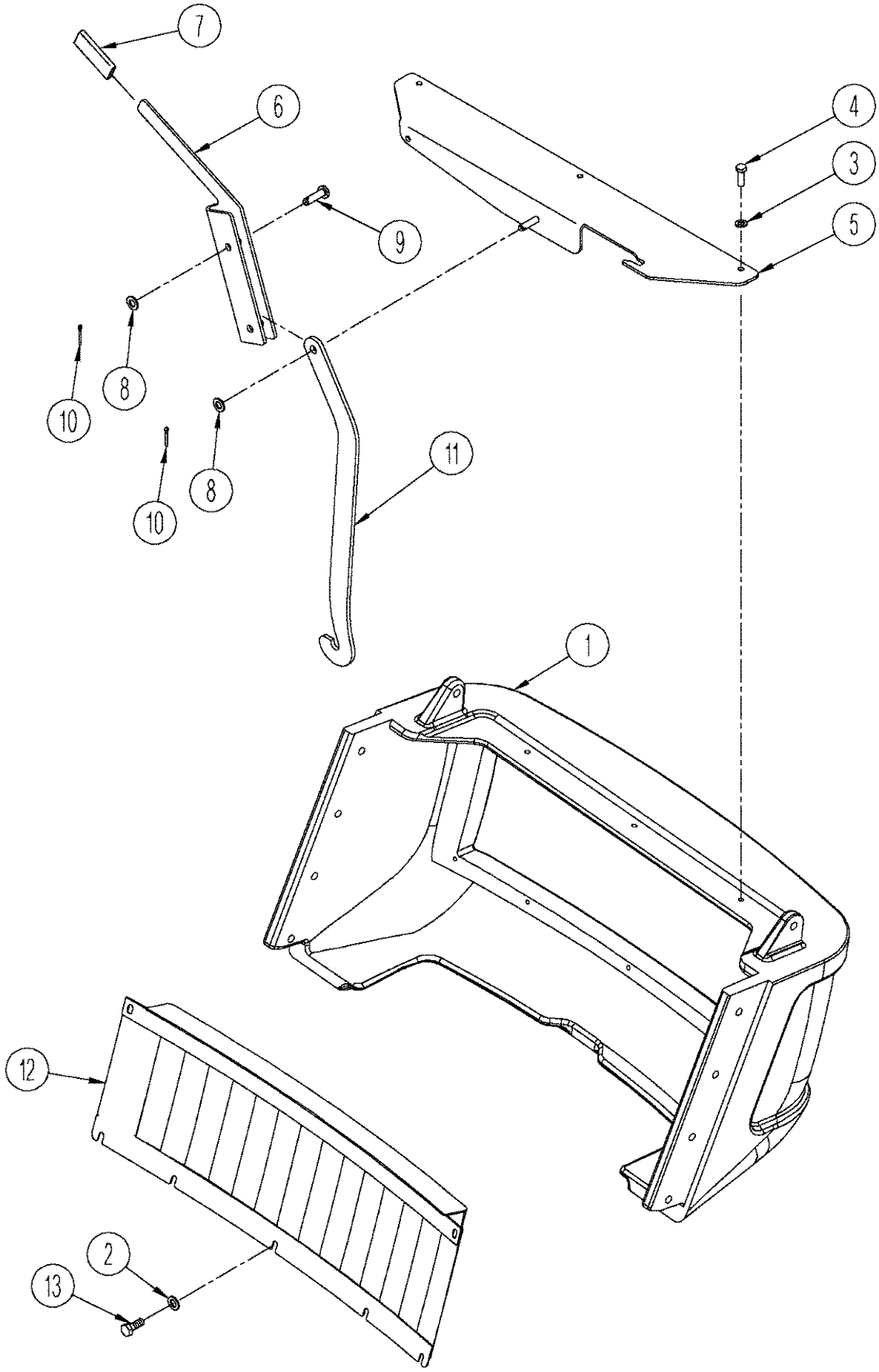

TJ375 TRACTOR - Chassis/Attachments

09 -33 BUMPER

ссылка	Номер детали	Кол-во	Описание
1	413470A1	1	BUMPER,
2	86624183	7	WASHER, M6 x 25 x 1.6,
3	86624184	3	WASHER, M8 x 16 x 1.6, 9 x 17 x 1.6 mm
4	43234	3	BOLT, Hex, M8 x 25, 10.9, Cap, HH, CL 10.9, M8 x 1.25 x 25
5	369666A1	1	PLATE, Latch
6	367925A1	1	HANDLE,
7	435479A1	1	CAP, Molding
8	86625253	4	WASHER, M11 x 24 x 2, 11 x 24 x 2 mm
9	86639110	1	PIN, CLEVIS, M10 x 35, 10 x 35 mm
10	130003	2	PIN, SPLIT (COTTER), M3.2 x 20,
11	367926A2	1	LINK,
12	413475A1	1	SCREEN,
13	86639037	7	BOLT, Hex, M6 x 16, 10.9, M6 x 16; 10.9

09 -37 REAR FRAME

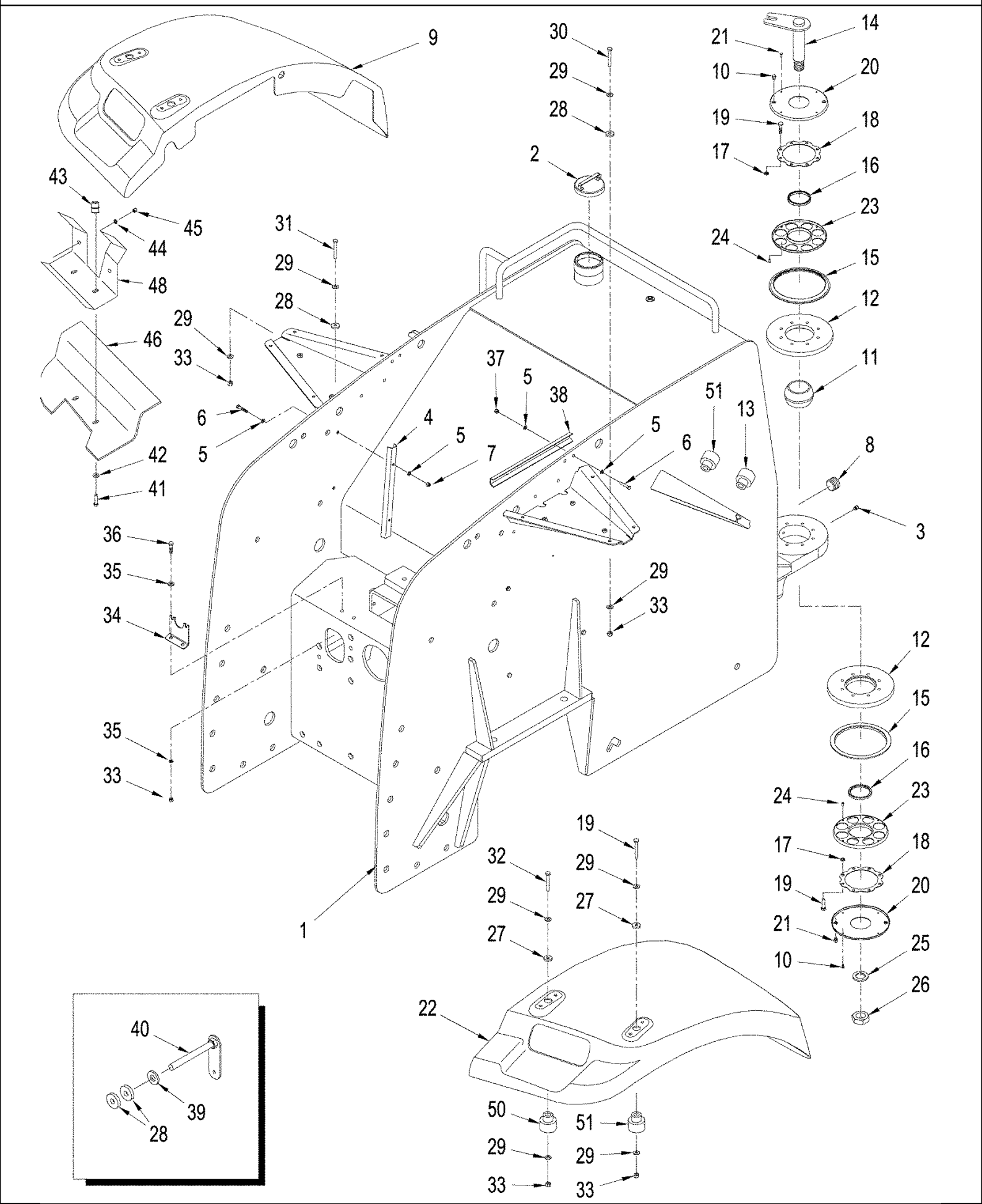

TJ375 TRACTOR - Chassis/Attachments

09 -37 REAR FRAME

ссылка	Номер детали	Кол-во	Описание
1	400676A1	1	FRAME,
2	433479A1	1	CAP, Fuel Fill
3	80717	1	NIPPLE, LUBE, 45є, 1/8" NPT x 7/8" lg, 45 deg, 1/8 PT x 7/8
4	413188A1	2	CHANNEL,
5	86624184	8	WASHER, M8 x 16 x 1.6, 9 x 17 x 1,6 mm
6	86625003	4	BOLT, Hex, M8 x 50, 10.9, M8 x 50; 10.9
7	86528579	4	NUT, LOCK, M8 x 1.25, Cl 10,
8	384163A1	1	PLUG, PLASTIC, LH
9	426937A6	1	FENDER, REAR, LH
10	86643151	4	PLUG, Hex Hd, 1/8"-27 NPTF, 1/8 PT
11	446720A1	1	BEARING, Roller
12	330032A1	2	RING,
13	434069A1	2	SPACER,
14	394364A1	1	PIN, Pivot
15	433478A1	2	GASKET,
16	D95148	2	WIPER, , BSN RVS005113
17	432444A1	16	SPACER,
18	430250A1	2	RETAINER,
19	43248	18	BOLT, Hex, M10 x 40, 10.9, Full Thd,
20	433480A2	2	COVER, , BSN RVS005113
20	87365381	2	COVER, , ASN RVS005113
21	86637658	8	SCREW, Hex Hd, #10-32 x 1/2", G5, No. 10 NC x 1/2
22	426938A6	1	FENDER, REAR, RH
	433481A1	2	HOUSING, Bearing, Inc. 23, 24, BSN RVS005113
	87365383	2	HOUSING, Bearing, Inc. 23, 24, ASN RVS005113
23	NSS	2	NOT SERVICED SEPARATELY, Housing
24	NSS	8	NOT SERVICED SEPARATELY, Spacer
25	SFD014088	1	WASHER, 1-3/4 in.
26	86637665	1	NUT, Jam
27	87030421	4	GROMMET, 3/8" ID x 1 1/4" Groove Dia, Str Cut, 3/4 in.
28	321232A1	10	BUSHING, M10 x 35; 10.9
29	86625253	16	WASHER, M11 x 24 x 2, 11 x 24 x 2,0 mm
30	86624979	2	BOLT, Hex, M10 x 75, 10.9, Cap, HH, CL 8.8, M10 x 1.5 x 75
31	86508619	2	BOLT, Hex, M10 x 60, 10.9,
32	43249	2	BOLT, Hex, M10 x 50, 10.9, Cap, HH, CL10.9, M10 x 1.5 x 50
33	86514720	10	NUT, LOCK, M10 x 1.5
34	402769A2	1	PLATE,
35	86624176	2	WASHER, M10 x 20 x 2, M10
36	86624978	2	BOLT, Hex, M10 x 35, 10.9, Full Thd,
37	86528579	2	NUT, LOCK, M8 x 1.25, Cl 10,
38	413188A1	1	CHANNEL,
39	86625256	1	WASHER, M12 x 28.5 x 4, HT,
40	76083463	1	HANDLE,
41	86977726	4	BOLT, Hex, M6 x 12, 8.8,
42	86517328	4	WASHER, LOCK, M6,

ссылка	Номер детали	Кол-во	Описание
43	404287A1	4	INSERT,
44	86624181	4	WASHER, M6, 6,6 x 12 x 1,6 mm
45	412250	4	NUT, LOCK, M8 x 1.25, Cl 8, M6; 8
46	436218A2	1	SHIELD, LH
47	436162A2	1	SHIELD, RH, Not Illustrated
48	432280A1	1	LAMP, TAIL, Mounting, LH
49	432279A1	1	LAMP, TAIL, Mounting, RH, Not Illustrated
50	434066A1	2	SPACER,
51	434068A1	4	SPACER,
52	353-411	1	PLUG, Dome, 1.000" hole, Nylon, Not Illustrated, Used without Rear Fender Lamps
53	353-403	1	PLUG, Dome, .437" hole, Nylon, 7/16 in, Not Illustrated, Used without Rear Fender Lamps

09 -39 CENTER LINK

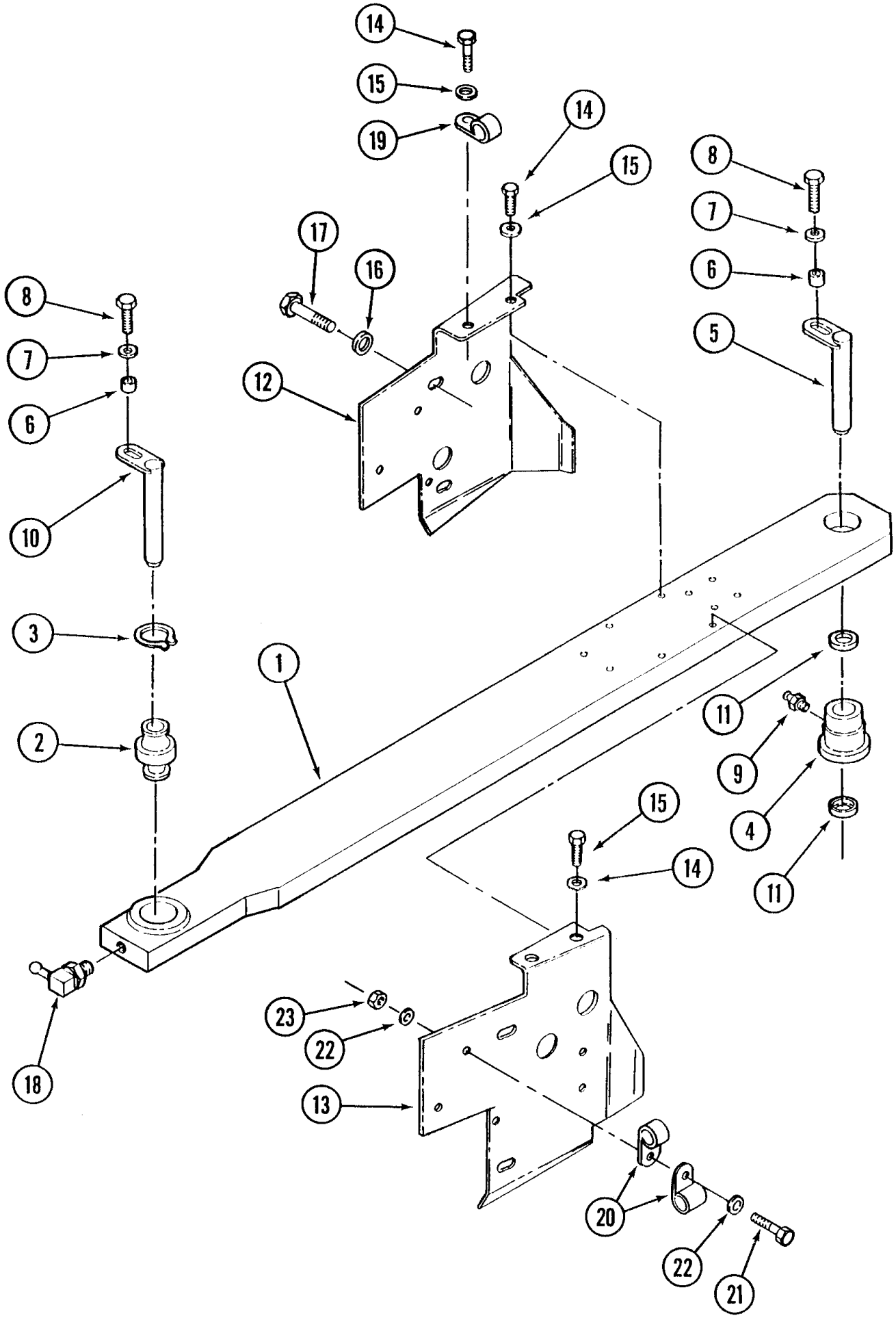

TJ375 TRACTOR - Chassis/Attachments

09 -39 CENTER LINK

ссылка	Номер детали	Кол-во	Описание
	400632A1	1	LINK, CONNECTING, Inc. 1 - 4, TJ450, TJ425
	400630A1	1	LINK, CONNECTING, Inc. 1 - 4, TJ375
1	NSS	1	NOT SERVICED SEPARATELY, Link
2	435499A1	1	BEARING, Pivot
3	86637648	1	RING, SNAP, #354, Int, Retaining, No. 354
4	435529A1	1	BUSHING,
5	195941A1	1	PIN, 1-3/4 x 8
6	435501A1	2	SPACER,
7	86625266	2	WASHER, M17.5 x 30 x 4, HT,
8	374835	2	BOLT, Hex, M16 x 40, 10.9, Hex, M16 x 40, 10.9
9	80710	1	NIPPLE, LUBE, 1/8"-27 x .66 lg,
10	195941A1	1	PIN,
11	D95143	2	SEAL,
12	400628A3	1	COVER, Drive Shaft, LH
13	400627A2	1	COVER, Drive Shaft, RH
14	86624176	4	WASHER, M10 x 20 x 2, M10
15	9861444	4	BOLT, Hex, M10 x 20, 10.9, Full Thd, M10 x 20; 10.9
16	86625255	4	WASHER, M13.5 x 24.5 x 3, HT,
17	43260	4	BOLT, Hex, M12 x 30, 10.9,
18	80717	1	NIPPLE, LUBE, 45є, 1/8" NPT x 7/8" lg, 45 deg, 1/8 PT x 7/8
19	86639003	1	CLAMP, 3/8", Insul, 7/16" Bolt,
20	257492	2	CLAMP, 9/16", Insul, 3/8" Bolt,
21	120104	1	BOLT, Hex, M8 x 20, 8.8,
22	86624184	2	WASHER, M8 x 16 x 1.6, 9 x 16 x 1,6 mm
23	43362	1	NUT, M8, Cl 10,

09 -40 HOOD AND SUPPORT

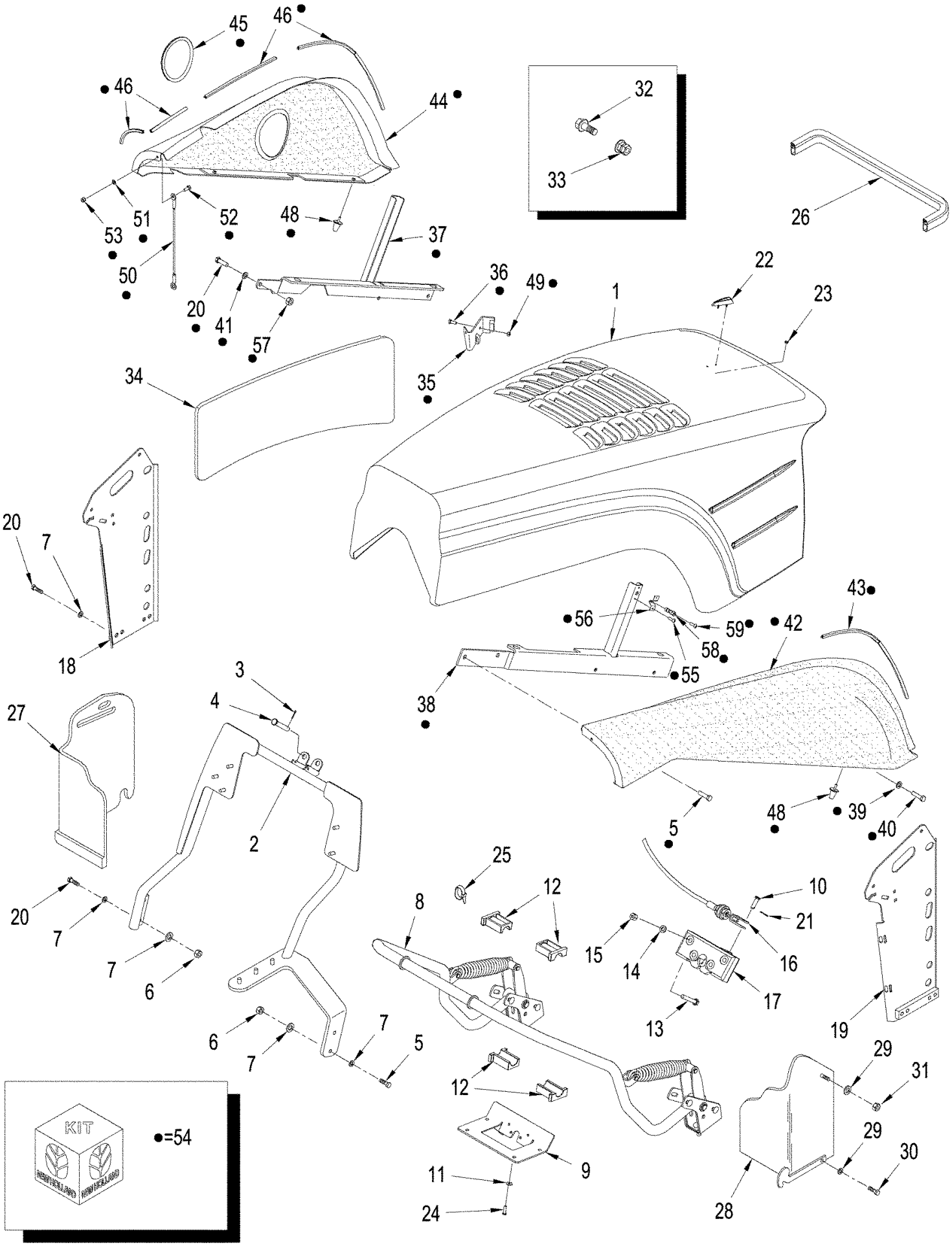

TJ375 TRACTOR - Chassis/Attachments

09 -40 HOOD AND SUPPORT

ссылка	Номер детали	Кол-во	Описание
1	410587A2	1	HOOD, Engine
2	401330A1	1	SUPPORT,
3	412685	1	PIN, SPLIT (COTTER), M4 x 32,
4	86639104	1	PIN, CLEVIS, M16 x 100, 11/16 x 100
5	86639031	3	BOLT, Hex, M12 x 45, 10.9, Full Thd, M12 x 45; 10.9
6	337475	2	NUT, M12, Cl 10,
7	86625255	12	WASHER, M13.5 x 24.5 x 3, HT,
8	339543A2	1	ARM, Lift, See Figure(s) : 09-42
9	352811A2	1	PLATE, Hood Latch, BSN RVS001406
9	445932A1	1	PLATE, Hood Latch, ASN RVS001406
10	86639105	1	PIN, CLEVIS, M6 x 20, Clevis, 6 x 20 mm
11	86624182	4	WASHER, M6 x 18 x 1.6,
12	314842A3	4	BEARING,
13	86639188	4	BOLT, Hex, M6 x 40, 10.9, Hex, M6 x 40, 10.9
14	86624181	4	WASHER, M6, 6,6 x 12 x 1,6 mm
15	86514335	4	NUT, LOCK, CL 10, M6 x 1
16	443297A1	1	CABLE PULLING GRIP, , Also Order 445932A1 Hood Latch Mounting Plate For BSN RVS001406
17	318159A1	1	LATCH,
18	339534A4	1	SUPPORT, Radiator, LH
19	339537A4	1	SUPPORT, Radiator, RH
20	337563	10	BOLT, Hex, M12 x 40, 10.9, Full Thd, Cap, HH, CL 10.9, M12 x 1.75 x 40
21	86639114	1	PIN, SPLIT (COTTER), M1.6 x 10, 1,6 x 10 mm
22	87353799	1	GUIDE, Hood Sight
23	86625060	2	NUT, LOCK, Self, Threading, 1/4",
24	86639038	4	BOLT, Hex, M6 x 25, 10.9, M6 x 25; 10.9
25	435437A1	2	STRAP, CABLE, 7 in
26	440891A1	1	SEAL, Foam
27	392428A2	1	COVER, Fan, LH, BSN RVS002789
28	392434A3	1	COVER, Fan, RH, BSN RVS002789
29	399576A1	6	WASHER, SPECIAL,
30	9515003	4	BOLT, Hex, M10 x 30, 10.9, Full Thd,
31	86500689	2	NUT, M10, Cl 10, M10; 10
	86983416	1	KIT, FIP, Threaded Insert, 6mm, Inc. 32, 33
32	NSS	1	NOT SERVICED SEPARATELY, Screw
33	NSS	1	NOT SERVICED SEPARATELY, Insert, Expandable
34	334209A3	1	INSULATION, FOAM, Hood
35	87422373	1	BRACKET, Dipstick
36	43233	1	BOLT, Hex, M8 x 20, 10.9, Cap, HH, M8 x 20, CL10.9
37	87446203	1	BRACKET, Support, LH
38	87446202	1	BRACKET, Support, RH
39	86624176	2	WASHER, M10 x 20 x 2, 11 x 20 x 2.0 mm
40	9515003	2	BOLT, Hex, M10 x 30, 10.9, Full Thd,
41	86625255	2	WASHER, M13.5 x 24.5 x 3, HT,
	87422377	1	SCREEN, Assy., RH, Inc. 42, 47, 48
42	NSS	1	NOT SERVICED SEPARATELY, Engine, RH

09 -40 HOOD AND SUPPORT

ссылка	Номер детали	Кол-во	Описание
43	87425604	1	MOLDING, RH
	87422376	1	SCREEN, Assy., LH, Inc. 44 - 48
44	NSS	1	NOT SERVICED SEPARATELY, Engine, LH
45	87422383	1	SEAL, RUBBER, Dipstick Hole, 476mm (18 - 3/4 in), Cut from: 87371080
46	87425602	1	MOLDING, LH, 1923mm (75 - 45/64 in), Cut from: 87371080
47	448713A1	1	STUD, Rear Latch
48	87422372	2	MOUNT, RUBBER, SPACER
49	43362	1	NUT, M8, Cl 10,
50	87422371	2	CABLE,
51	86511315	4	WASHER, M8 x 16 x 1.6,
52	120104	2	BOLT, Hex, M8 x 20, 8.8,
53	86528579	2	NUT, LOCK, M8 x 1.25, Cl 10,
54	719973003	1	KIT, Engine Screen, Inc. 5, 20, 35 - 53, 55 & 56
55	86632692	4	SCREW, SELF TAPPING, Cross Pan Hd, #8 x 1/2", 1/2"
56	1968039C3	2	FASTENER, FASTENER, Stud, Screen Latch
57	337475	2	NUT, M12, Cl 10,
58	448713A1	1	STUD, Latching
59	463-6108	1	SCREW,

09 -41 GRILLE

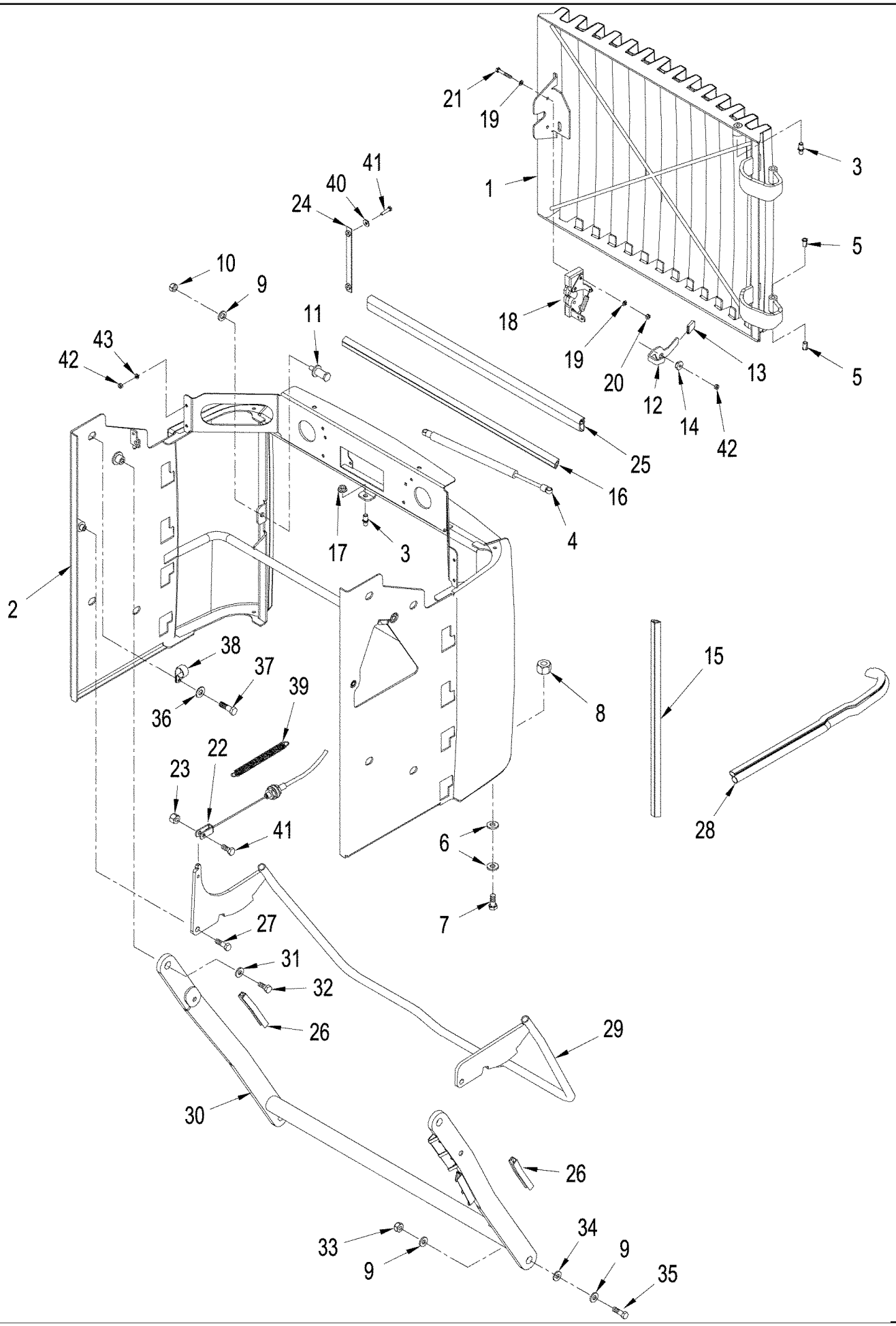
21
19
1
3
41
40
24
5
10
9
18
11
43
42
19
20
13
5
12
14
42
25
16
4
17
3
2
38
37
39
36
8
15
22
23
41
28
6
7
27
31
32
26
29
30
26
33
9
34
9
35

TJ375 TRACTOR - Chassis/Attachments

09 -41 GRILLE

ссылка	Номер детали	Кол-во	Описание
1	412553A1	1	SCREEN,
2	411597A3	1	GRILLE ASSY,
3	87427657	2	STUD,
4	L129243	1	CYLINDER ASSY., Gas Spring
5	529761R1	4	BUSHING,
6	86624184	6	WASHER, M8 x 16 x 1.6, 9 x 17 x 1,6 mm
7	86625005	2	BOLT, Hex, M8 x 60, 10.9,
8	86528579	2	NUT, LOCK, M8 x 1.25, Cl 10,
9	86625255	5	WASHER, M13.5 x 24.5 x 3, HT,
10	86637939	1	NUT, 7/16; 8
11	328534A1	1	BOLT, Striker
12	308453A3	1	CABLE,
13	371802A1	1	SLEEVE,
14	349427A1	1	SPACER,
15	395578A1	2	SEAL, 558 mm (22 in), Cut From : 353729A1
16	352768A1	1	SEAL,
17	43435	1	NUT, M10, Flg Ser,
18	318159A1	1	LATCH,
19	86624181	1	WASHER, M6, 6,6 x 12 x 1,6 mm
20	393392	1	NUT, LOCK, M6 x 1, Cl 8, CL 10, M6 x 1.0
21	86639188	2	BOLT, Hex, M6 x 40, 10.9, Hex, M6 x 40, 10.9
22	443297A1	1	CABLE PULLING GRIP, , Also Order 445932A1 Hood Latch Mounting Plate For BSN RVS001406
23	393392	1	NUT, LOCK, M6 x 1, Cl 8, CL 10, M6 x 1.0
24	356813A2	4	BRACKET, SUPPORTING, Nut Strip
25	436610A1	1	SEAL, Cut From : 436609A1
26	388554A1	2	GROMMET, 127 mm (5 in), Cut From : 443080A1
27	357893A1	2	SCREW,
28	412557A1	2	SEAL, RUBBER, 581 mm (23 in)
29	325525A3	1	ARM, Safety
30	414503A1	1	LINK, Hood
31	86625253	8	WASHER, M11 x 24 x 2, 11 x 24 x 2 mm
32	9861444	2	BOLT, Hex, M10 x 20, 10.9, Full Thd, M10 x 20; 10.9
33	337475	4	NUT, M12, Cl 10,
34	316937A1	2	SPACER,
35	43263	2	BOLT, Hex, M12 x 60, 10.9, CL 10.9, M12 x 1.75 x 60
36	86639325	8	WASHER, M10 x 24.5 x 3, HT,
37	9846677	8	BOLT, Hex, M10 x 25, 10.9, Full Thd, Cap, HH, CL 10.9, M10 x 1.5 x 25
38	86639008	1	CLAMP, 1/4", Insul, 1/2" Bolt, 1/4 ID
39	L106237	1	SPRING,
40	86624182	12	WASHER, M6 x 18 x 1.6,
41	86639038	12	BOLT, Hex, M6 x 25, 10.9, M6 x 25; 10.9
42	86500688	13	NUT, M6, Cl 10,
43	86517328	4	WASHER, LOCK, M6,

09 -42 HOOD - LIFT ARM

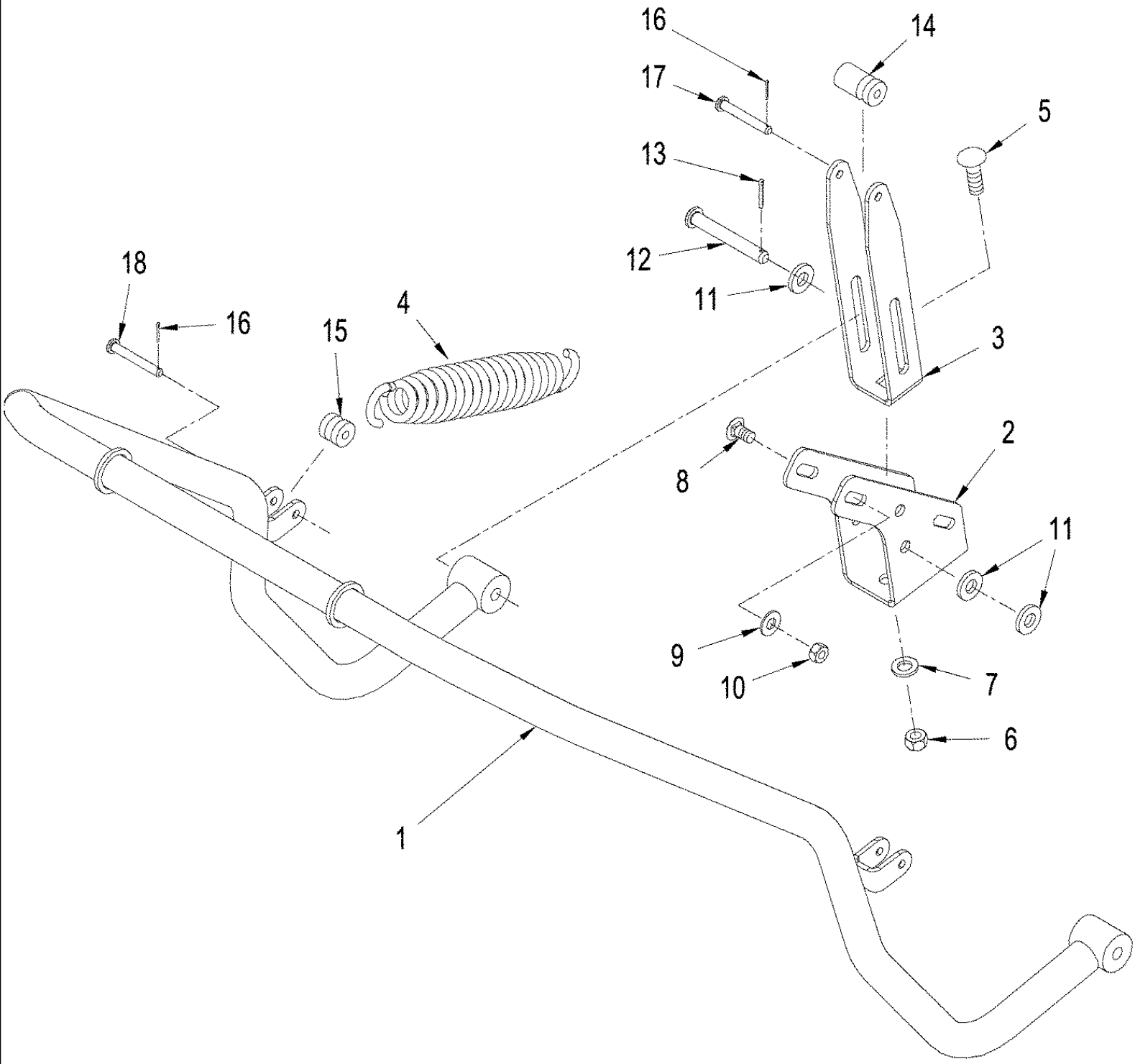

TJ375 TRACTOR - Chassis/Attachments

09 -42 HOOD - LIFT ARM

ссылка	Номер детали	Кол-во	Описание
1	339543A2	1	ARM, Lift, Rear
2	339551A1	2	BRACKET,
3	339547A1	2	CLEVIS, ADJUSTABLE,
4	339549A1	2	SPRING, COIL,
5	328754	2	BOLT, CARRIAGE, Short NK, M12 x 40, Cl8.8, Full Thd,
6	337475	2	NUT, M12, Cl 10,
7	86625255	2	WASHER, M13.5 x 24.5 x 3, HT,
8	V43471	4	BOLT, Carriage, Short Neck, CL 8.8, M10 x 1.5 x 20
9	86625253	4	WASHER, M11 x 24 x 2, 11 x 24 x 2 mm
10	86500689	4	NUT, M10, Cl 10, M10; 10.9
11	86625256	6	WASHER, M12 x 28.5 x 4, HT,
12	86639103	2	PIN, CLEVIS, M12 x 90, M2 X 90
13	130003	2	PIN, SPLIT (COTTER), M3.2 x 20,
14	313992A1	2	SPOOL,
15	320429A1	2	SPOOL,
16	86639115	4	PIN, SPLIT (COTTER), M2 x 12, Cotter, M2 x 12
17	86639107	2	PIN, CLEVIS, M8 x 60, Clevis, M8 x 60
18	86639106	2	PIN, CLEVIS, M8 x 40, Clevis, M8 x 40

09 -43 HEATER - HOSES

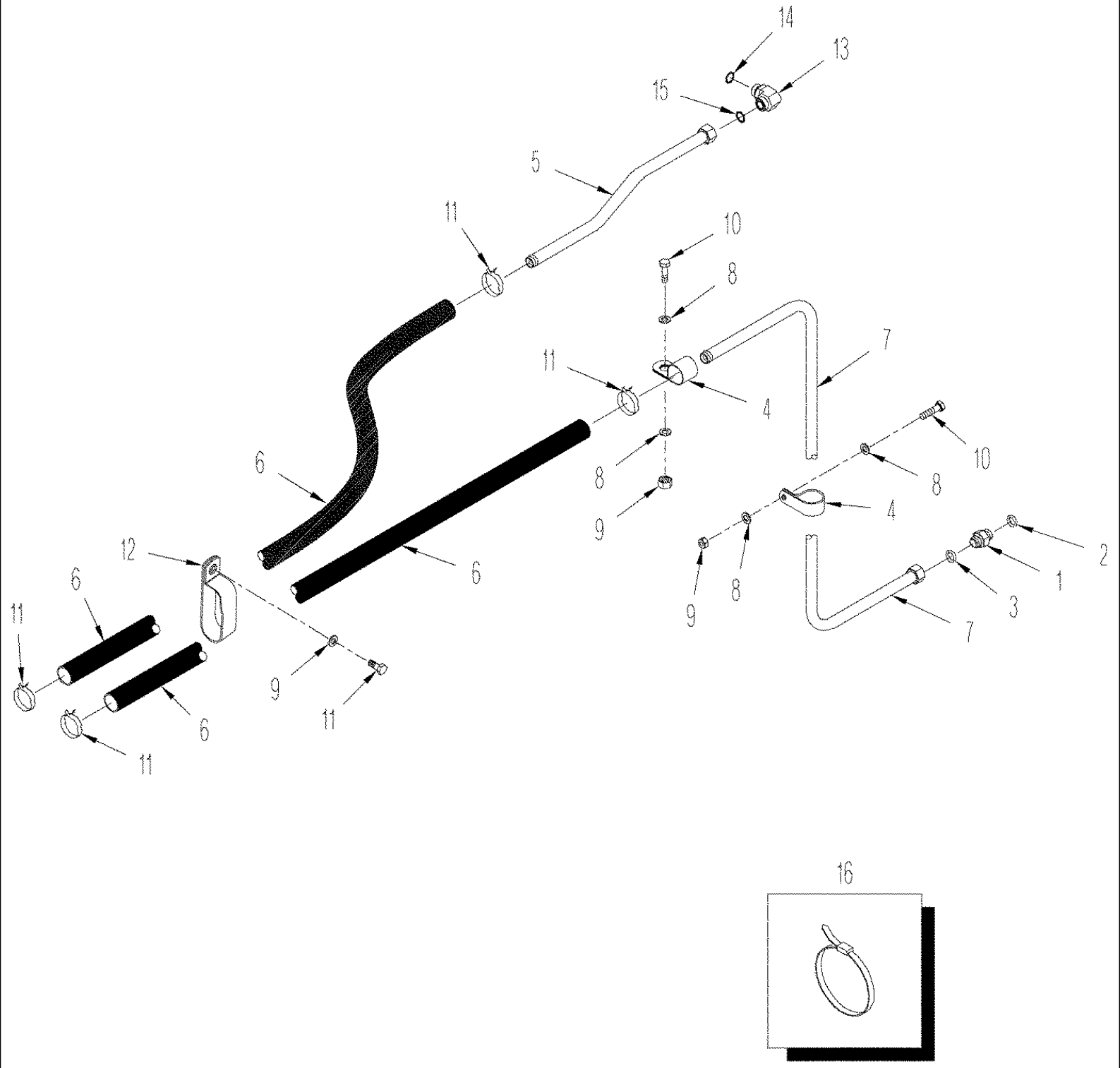

TJ375 TRACTOR - Chassis/Attachments

09 -43 HEATER - HOSES

ссылка	Номер детали	Кол-во	Описание
1	86579682	1	CONNECTOR, HYD., 1 3/16"-12 ORFS x M27 x 2 ORB, Includes 2, 3
2	86639045	1	O-RING, Cl 6, 23.6MM ID x 2.9 Thk, 23.6 ID x 2.9
3	9991976	1	O-RING, -018, 90 Duro, .739" ID x .070" Thk,
4	86594406	2	CLAMP, 5/8", Insul, 3/8" Bolt, 5/8 ID
5	392223A2	1	TUBE,
6	435448A1	2	HOSE, 5/8 ID x 57 in, Return / Supply
7	391492A2	1	TUBE,
8	86624184	4	WASHER, M8 x 16 x 1.6, 9 x 17 x 1.6 mm
9	43362	2	NUT, M8, Cl 10,
10	43233	2	BOLT, Hex, M8 x 20, 10.9, Cap, HH, CL 10.9, M8 x 1.25 x 20
11	82012722	4	CLAMP, HOSE, 1/2 - 29/32 dia
12	R54363	1	CLAMP,
13	86579697	1	ELBOW, 90є, 1 3/16"-12 ORFS x M27 x 2 ORB, 90, M27 orb x 20 fc sl, Includes 14, 15
14	86639045	1	O-RING, Cl 6, 23.6MM ID x 2.9 Thk, 23,6 ID x 2,9
15	9991976	1	O-RING, -018, 90 Duro, .739" ID x .070" Thk,
16	435437A1	2	STRAP, CABLE, Tie

09 -44 AIR CONDITIONING SYSTEM

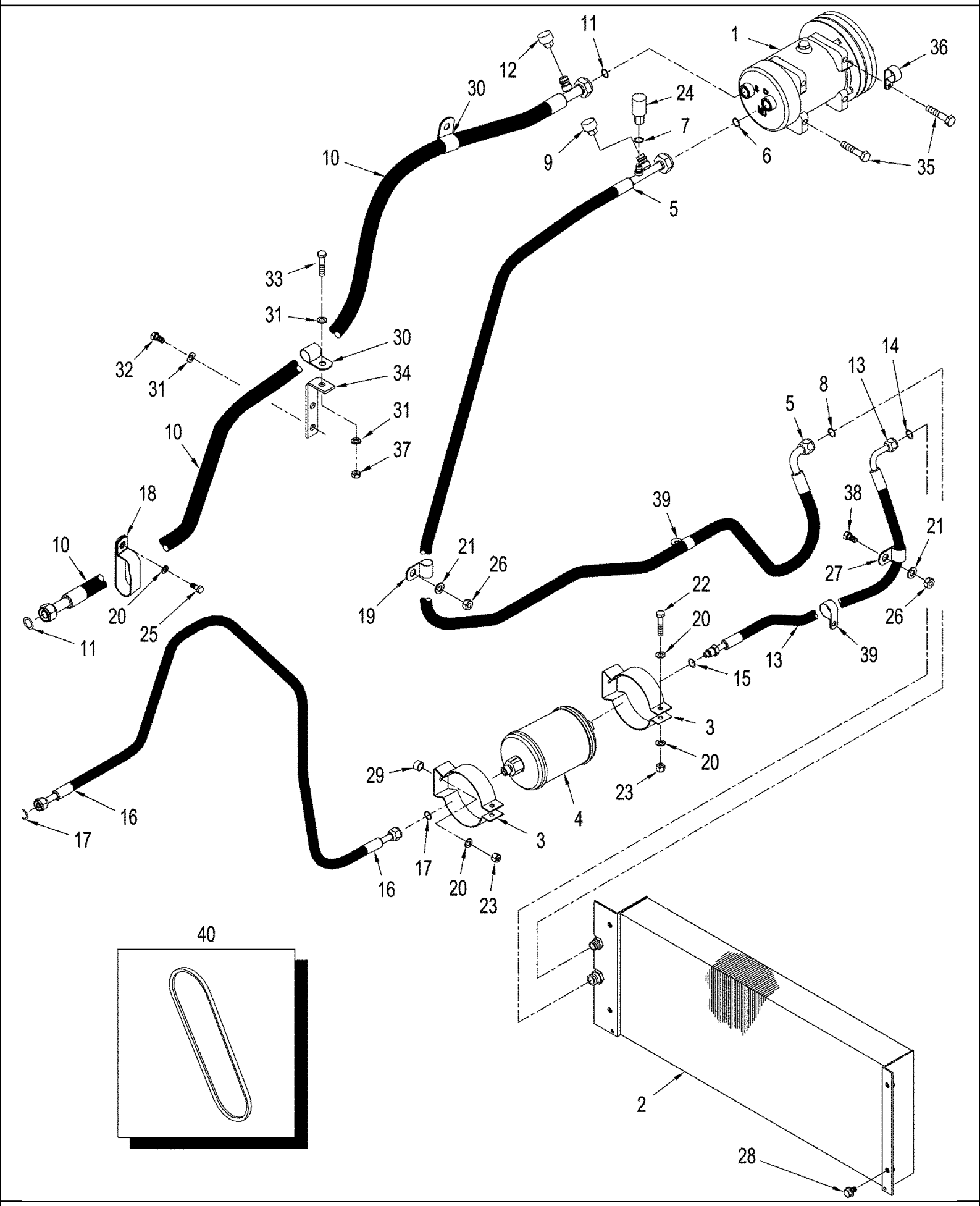

TJ375 TRACTOR - Chassis/Attachments

09 -44 AIR CONDITIONING SYSTEM

ссылка	Номер детали	Кол-во	Описание
1	86993463	1	COMPRESSOR, AIRCOND.,
2	87315600	1	CONDENSER,
3	433723A1	2	NO DESCRIPTION, Clamp
4	295006A1	1	RECEIVER-DRYER, 134a
5	434240A1	1	HOSE, 2200 mm (87 in), Inc. 6 - 9
6	128485A1	1	O-RING, 9/16 ID x 1/16
7	128483A1	1	O-RING, 5/16 ID x 1/16
8	128484A1	1	O-RING, 7/16 ID x 1/16
9	122554A1	1	CAP,
10	390960A1	1	HOSE, 2950 mm (116 in), Inc. 11, 12
11	128485A1	2	O-RING, 9/16 ID x 1/16
12	122553A1	1	CAP,
13	434241A1	1	HOSE ASSY., 2100 mm (83 in), Inc. 14, 15
14	128484A1	1	O-RING, 7/16 ID x 1/16
15	128483A1	1	O-RING, 5/16 ID x 1/16
16	308750A3	1	HOSE ASSY., 2200 mm (87 in), Inc. 17
17	128483A1	2	O-RING, 5/16 ID x 1/16
18	R54363	2	CLAMP,
19	86598598	1	CLAMP, 3/4", Insul, 1/2" Bolt, 3/4 ID
20	86624184	13	WASHER, M8 x 16 x 1.6, 9 x 17 x 1,6 mm
21	86624176	6	WASHER, M10 x 20 x 2, M10
22	9780069	2	BOLT, Hex, M8 x 40, 10.9, Cap, HH, CL 10.9, M8 x 1.25 x 40
23	43362	5	NUT, M8, Cl 10,
24	284273A2	1	SWITCH,
25	43234	2	BOLT, Hex, M8 x 25, 10.9, Cap, HH, CL 10.9, M8 x 1.25 x 25
26	86500689	5	NUT, M10, Cl 10, M10; 10.9
27	86639005	3	CLAMP, 5/8", Insul, 1/2" Bolt,
28	9804258	4	BOLT, Hex Flg, M8 x 20, 8.8,
29	432444A1	2	SPACER,
30	86625038	2	CLAMP, 1", Insul, 1/2" Bolt, 1 ID
31	86624177	4	WASHER, M12 x 24 x 2.5, 13,5 x 24 x 2,5 mm
32	43258	2	BOLT, Hex, M12 x 20, 10.9, Full Thd, Cap, HH, CL 10.9, M12 x 1.75 x 20
33	43260	1	BOLT, Hex, M12 x 30, 10.9,
34	391460A1	1	BRACKET,
35	86512165	4	BOLT, Hex, M8 x 100, 10.9, M8 x 100; 10.9
36	86572009	1	CLAMP, 3/8", Insul, 3/8" Bolt, 3/8 ID
37	337475	1	NUT, M12, Cl 10,
38	9846677	1	BOLT, Hex, M10 x 25, 10.9, Full Thd, Cap, HH, CL 10.9, M10 x 1.5 x 25
39	86639011	2	CLAMP, J, 3/4", Insul, 3/8" Bolt,
40	87437226	1	BELT, Accessory Drive, Alternator & A/C

09 -45 AIR CONDITIONING - DUCTS

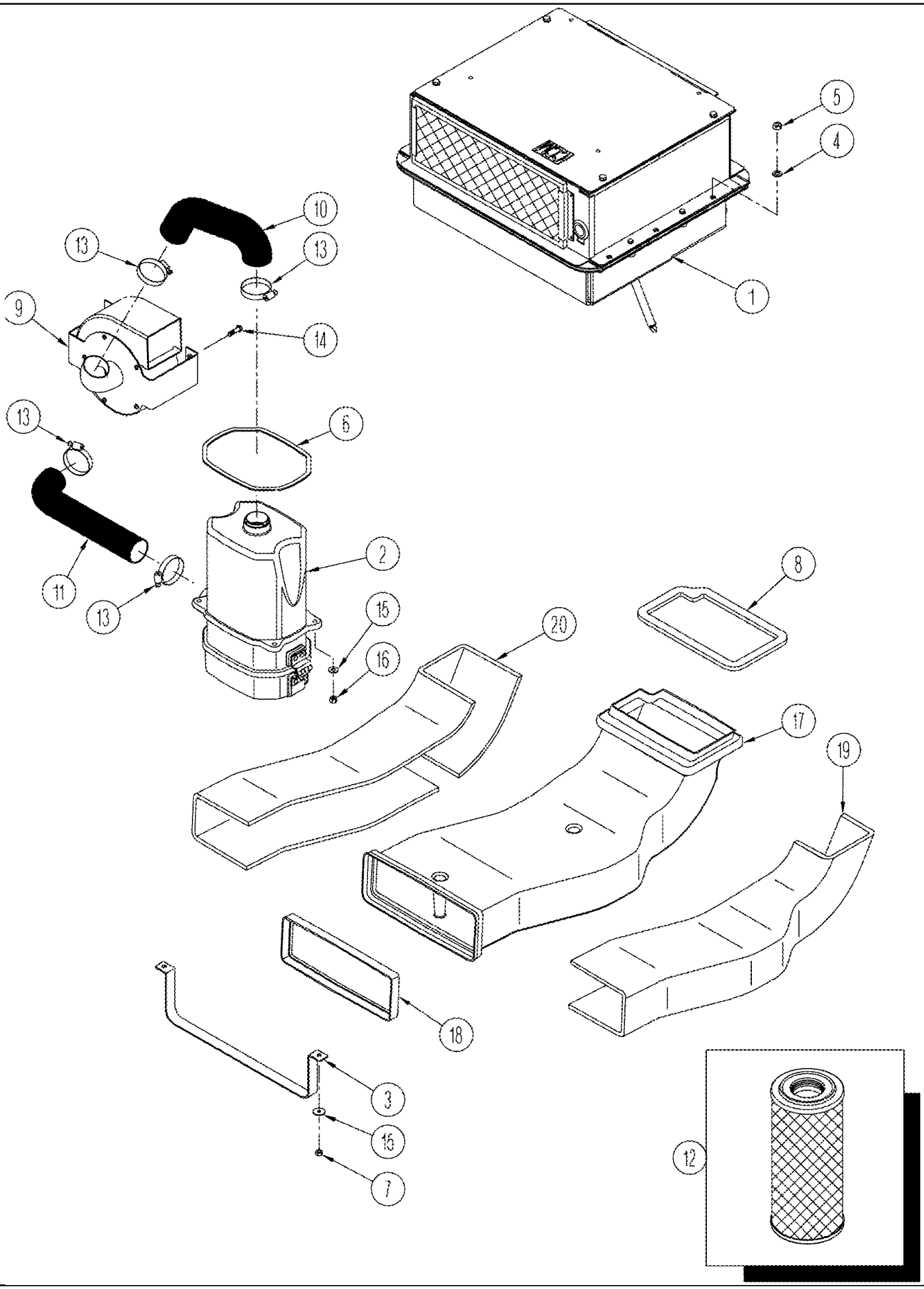

TJ375 TRACTOR - Chassis/Attachments

09 -45 AIR CONDITIONING - DUCTS

ссылка	Номер детали	Кол-во	Описание
1	87438586	1	AIR CONDITIONER, See Figure(s) : 09-46, With Automatic Temperature Control, Deluxe Cab, BSN RVS003801
1	87441018	1	AIR CONDITIONER, See Figure (s) : 09-46 (01), Deluxe Cab, With Automatic Temperature Control, ASN RVS003801
1	87438585	1	AIR CONDITIONER, See Figure(s) : 09-47, Standard Cab, Without Automatic Temperature Control, BSN RVS003801
1	87441017	1	AIR CONDITIONER, See Figure (s) : 09-47 (01), Without Automatic Temperature Control, Standard Cab, ASN RVS003801
2	319970A3	1	HOUSING,
3	384950A2	1	BRACKET,
4	86624176	6	WASHER, M10 x 20 x 2, M10
5	86500689	6	NUT, M10, Cl 10, M10; 10.9
6	359586A1	1	SEAL, Filter
7	43362	2	NUT, M8, Cl 10,
8	278967A3	1	GASKET, Mounting, Floor Plate
9	NSS	1	NOT SERVICED SEPARATELY, Blower Assy, Suction / Pressurizer, See Figure(s) : 09-49
10	307024A4	1	HOSE, Output
11	87380071	1	HOSE, Air Intake
12	86994156	1	FILTER, AIR, Recirculation
13	86050202	4	CLAMP, HOSE, #32, 1.56/2.50 Type F Worm,
14	86508616	4	BOLT, Hex, M6 x 12, 10.9, Cap, HH, M6 x 1 x 12, CL10.9
15	86625263	6	WASHER, M8 x 20 x 1.6,
16	86528579	4	NUT, LOCK, M8 x 1.25, Cl 10,
17	327851A1	1	DUCT,
18	359670A2	1	SEAL,
19	328051A2	1	INSULATION, FOAM, RH
20	328052A2	1	INSULATION, FOAM, LH

09 -46 AIR CONDITIONING - CLIMATE CONTROL UNIT WITH AUTO TEMP CONTROL, BSN RVS003801

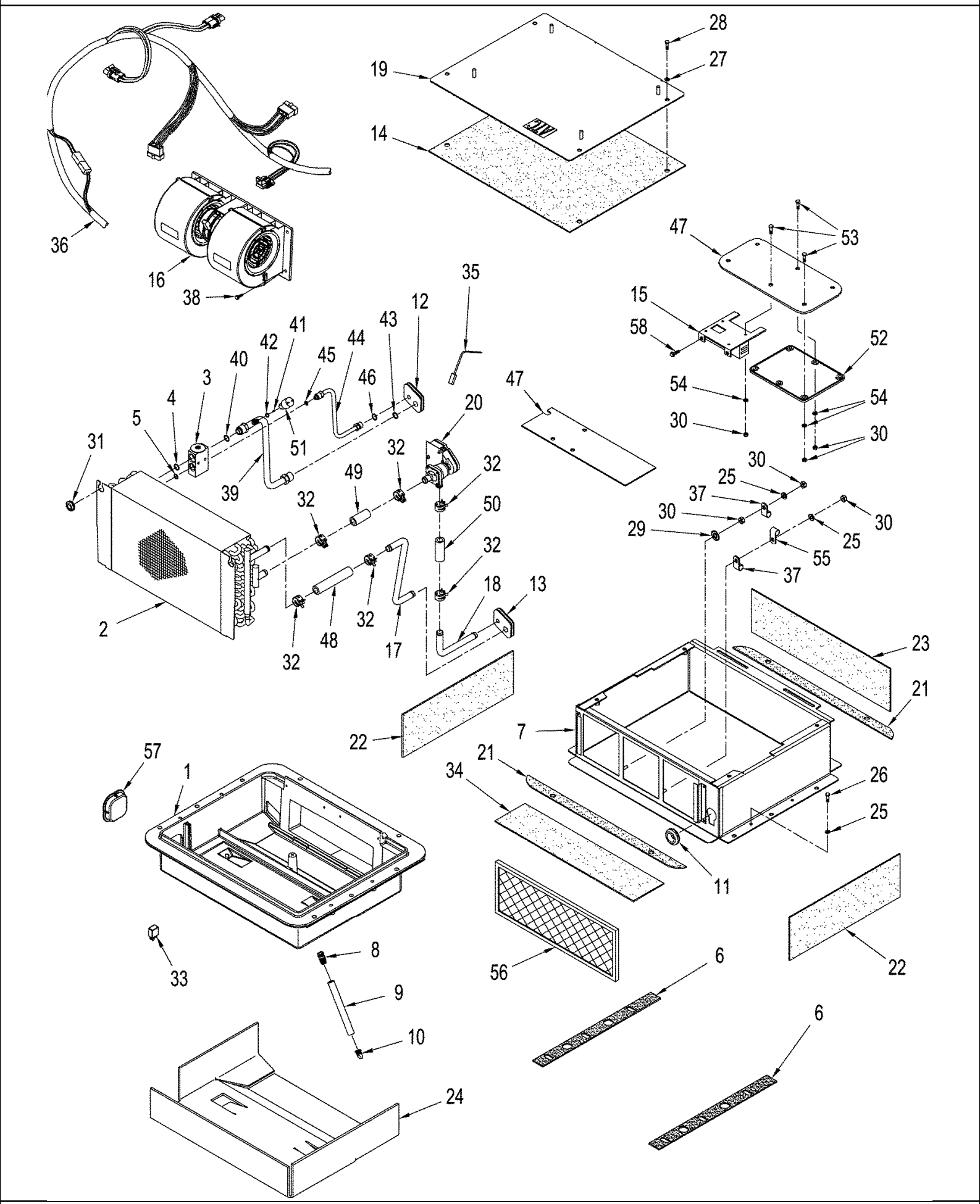

09 -46 AIR CONDITIONING - CLIMATE CONTROL UNIT WITH AUTO TEMP CONTROL, BSN RVS003801

ссылка	Номер детали	Кол-во	Описание
	87438586	1	AIR CONDITIONER, Inc. 1 - 57
1	322996A1	1	BOX,
2	86990262	1	CORE, Core, Evaporator and Heater, Inc. 3 - 5
3	386535A1	1	VALVE, Expansion
4	128485A1	1	O-RING, 9/16 ID x 1/16
5	128484A1	1	O-RING, 7/16 ID x 1/16
6	322994A1	4	GASKET, Mounting
7	322831A2	1	CASE,
8	1250522C3	2	ELBOW,
9	1977334C1	2	HOSE, 610 mm (24-1/8 in), Cut From : 198091CX
10	109239C2	2	VALVE, Check
11	86637781	1	GROMMET, 1" ID x 1 3/8" Groove Dia,
12	322989A1	1	GROMMET,
13	322990A1	1	GROMMET,
14	322992A1	1	GASKET, Cover
15	323018A1	1	MODULE, Blower Motor, 12V
16	323610A1	1	BLOWER,
17	322985A1	1	PIPE, Outlet
18	322987A1	1	PIPE, Inlet
19	323625A1	1	COVER, TOP,
20	427356A1	1	VALVE, CONTROL, Regulator
21	322995A1	4	GASKET, Mounting
22	322993A1	2	GASKET, Housing
23	322991A1	1	GASKET, Housing
24	324484A1	1	INSULATOR,
25	86517328	6	WASHER, LOCK, M6,
26	43133	4	BOLT, Hex, M8 x 80, 8.8,
27	80681	4	WASHER, LOCK, 5/16",
28	43234	4	BOLT, Hex, M8 x 25, 10.9, Cap, HH, CL 10.9, M8 x 1.25 x 25
29	88538	1	WASHER, LOCK, Ext-Int Tooth, 1/4", 1/4"
30	86500688	6	NUT, M6, Cl 10,
31	86637777	2	GROMMET, 1/2" ID x 13/16" Groove Dia, Diag Cut, 13/16 dia
32	1954736C1	6	CLAMP, HOSE, No. 24
33	87414866	1	RELAY, 20 AMP
34	327306A1	1	GASKET, Mounting
35	323016A1	2	SENSOR,
36	397704A1	1	HARNESS, WIRE,
37	86050346	2	CLAMP, 3/8", Insul, 1/4" Bolt,
38	86637791	4	SCREW, SELF TAPPING, Hex Wash Hd, #10 x 3/4", No. 10 x 3/4
39	322839A1	1	PIPE, Inc. 40 - 43
40	128485A1	1	O-RING, 9/16 ID x 1/16
41	1250594C2	1	CORE,
42	128483A1	1	O-RING, 5/16 ID x 1/16
43	128485A1	1	O-RING, 5/8 ID x 1/16
44	322840A1	1	PIPE, Inc. 45, 46

09 -46 AIR CONDITIONING - CLIMATE CONTROL UNIT WITH AUTO TEMP CONTROL, BSN RVS003801

ссылка	Номер детали	Кол-во	Описание
45	128483A1	1	O-RING, 5/16 ID x 1/16
46	128484A1	1	O-RING, 7/16 ID x 1/16 Thk
47	397702A1	1	BRACKET, Mounting
48	1321290C2	1	HOSE, 127 mm (5 in), Cut From : 97252C1
49	324022A1	1	HOSE, 54 mm (2-1/8 in), Cut From : 97252CX
50	324023A1	1	HOSE, 64 mm (2-1/2 in), Cut From : 97252CX
51	284272A3	1	SWITCH, PRESSURE, Low Pressure
52	87429902	1	CONTROL, Temperature Module
53	120100	3	BOLT, Hex, M6 x 20, 8.8,
54	86624181	3	WASHER, M6, 6,6 x 12 x 1,6 mm
55	86642442	1	CLAMP, 1/8", Insul, 1/4" Bolt,
56	87408707	1	FILTER, Recirculated Air
57	368313A1	1	PLUG, PLASTIC,
58	86637790	2	SCREW, SELF TAPPING, Hex Wash Hd, #8 x 1/2",

09 -46(01) AIR CONDITIONING - CLIMATE CONTROL UNIT WITH AUTO TEMP CONTROL, ASN RVS003801

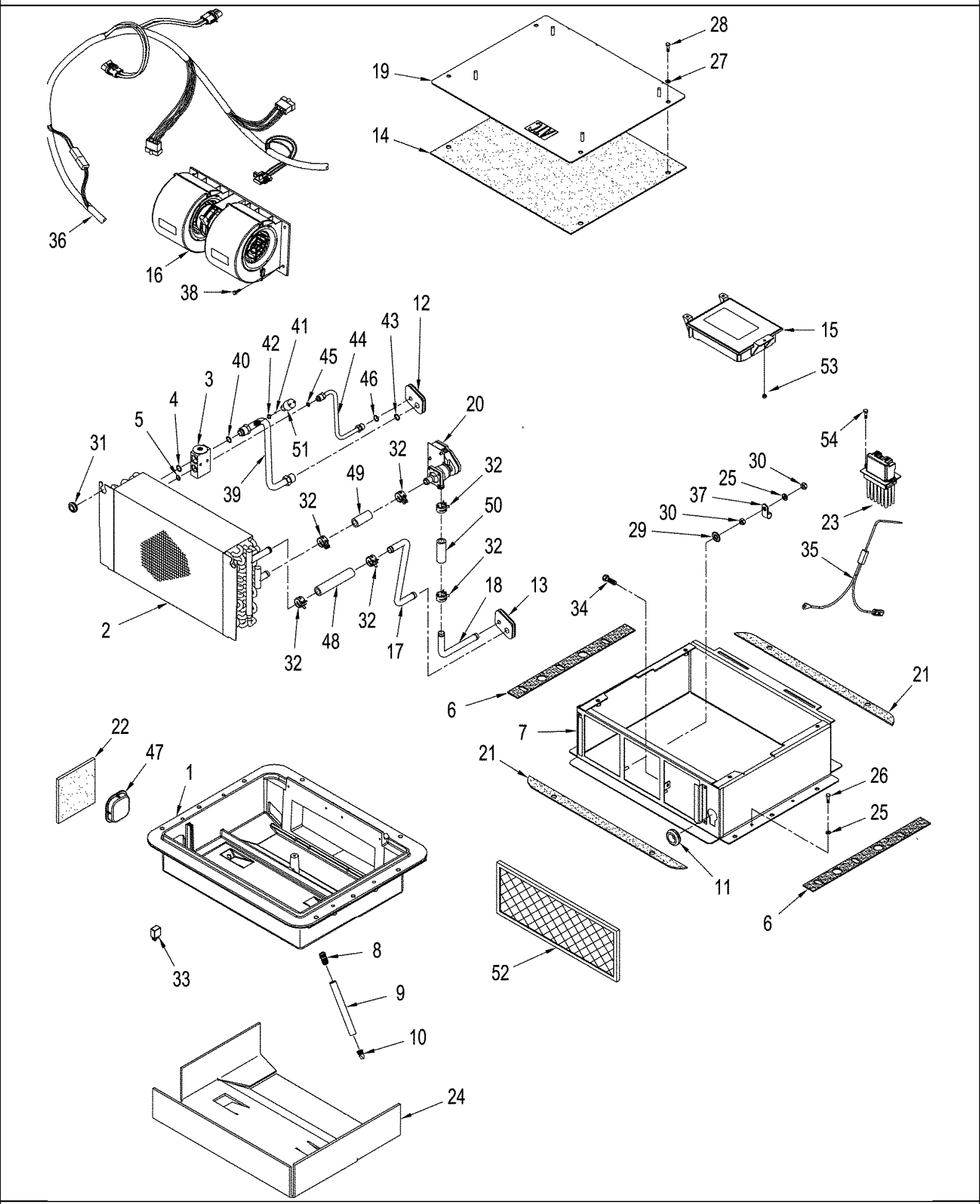

ASN RVS003801

TJ375 TRACTOR - Chassis/Attachments

09 -46(01) AIR CONDITIONING - CLIMATE CONTROL UNIT WITH AUTO TEMP CONTROL, ASN RVS003801

ссылка	Номер детали	Кол-во	Описание
	87441018	1	AIR CONDITIONER, Inc. 1 - 53
1	322996A1	1	BOX,
2	86990262	1	CORE, Core, Evaporator and Heater, Inc. 3 - 5
3	386535A1	1	VALVE, Expansion
4	128485A1	1	O-RING, 9/16 ID x 1/16
5	128484A1	1	O-RING, 7/16 ID x 1/16
6	322994A1	4	GASKET, Mounting
7	87306776	1	CASE ASSY.,
8	1250522C3	2	ELBOW,
9	1977334C1	2	HOSE, 610 mm (24-1/8 in), Cut From : 198091CX
10	109239C2	2	VALVE, Check
11	86637781	1	GROMMET, 1" ID x 1 3/8" Groove Dia,
12	322989A1	1	GROMMET,
13	322990A1	1	GROMMET,
14	322992A1	1	GASKET, Cover
15	87447392	1	CONTROL, Blower Motor, 12V
16	323610A1	1	BLOWER,
17	322985A1	1	PIPE, Outlet
18	322987A1	1	PIPE, Inlet
19	87306495	1	COVER,
20	427356A1	1	VALVE, CONTROL, Regulator
21	322995A1	4	GASKET, Mounting
22	87306773	1	INSULATION, FOAM,
23	87306706	1	TERMINAL CONNECTOR, Linear Blower
24	324484A1	1	INSULATOR,
25	86517328	5	WASHER, LOCK, M6,
26	86508568	4	BOLT, Hex, M6 x 16, 8.8,
27	80681	4	WASHER, LOCK, 5/16",
28	43234	4	BOLT, Hex, M8 x 25, 10.9, Cap, HH, CL 10.9, M8 x 1.25 x 25
29	88538	1	WASHER, LOCK, Ext-Int Tooth, 1/4", 1/4"
30	86500688	3	NUT, M6, Cl 10,
31	86637777	2	GROMMET, 1/2" ID x 13/16" Groove Dia, Diag Cut, 13/16 dia
32	1954736C1	6	CLAMP, HOSE, No. 24
33	87414866	1	RELAY, 20 AMP
34	87454442	1	SENSOR, Thermometer
35	323016A1	1	SENSOR,
36	87454441	1	HARNESS, WIRE,
37	86625035	1	CLAMP, 1/2", Insul, 1/4" Bolt,
38	86637791	4	SCREW, SELF TAPPING, Hex Wash Hd, #10 x 3/4", No. 10 x 3/4
39	322839A1	1	PIPE, Suction, Inc. 40 - 43
40	128485A1	1	O-RING, 9/16 ID x 1/16
41	1250594C2	1	CORE,
42	128483A1	1	O-RING, 5/16 ID x 1/16
43	128485A1	1	O-RING, 5/8 ID x 1/16
44	322840A1	1	PIPE, Inc. 45, 46

ASN RVS003801

09 -46(01) AIR CONDITIONING - CLIMATE CONTROL UNIT WITH AUTO TEMP CONTROL, ASN RVS003801

ссылка	Номер детали	Кол-во	Описание
45	128484A1	1	O-RING, 7/16 ID x 1/16 Thk
46	NSS	1	NOT SERVICED SEPARATELY, 5/16 ID x 1/16
47	368313A1	1	PLUG, PLASTIC,
48	1321290C2	1	HOSE, 127 mm (5 in), Cut From : 97252C1
49	324022A1	1	HOSE, 54 mm (2-1/8 in), Cut From : 97252CX
50	324023A1	1	HOSE, 64 mm (2-1/2 in), Cut From : 97252CX
51	284272A3	1	SWITCH, PRESSURE, Low Pressure
52	87408707	1	FILTER, Recirculated Air
53	385681	1	NUT, LOCK, M4 x .7, Cl 8, M4, CL8
54	86637790	2	SCREW, SELF TAPPING, Hex Wash Hd, #8 x 1/2",

09 -47 AIR CONDITIONING - CLIMATE CONTROL UNIT WITHOUT AUTO TEMP CONTROL, BSN RVS003801

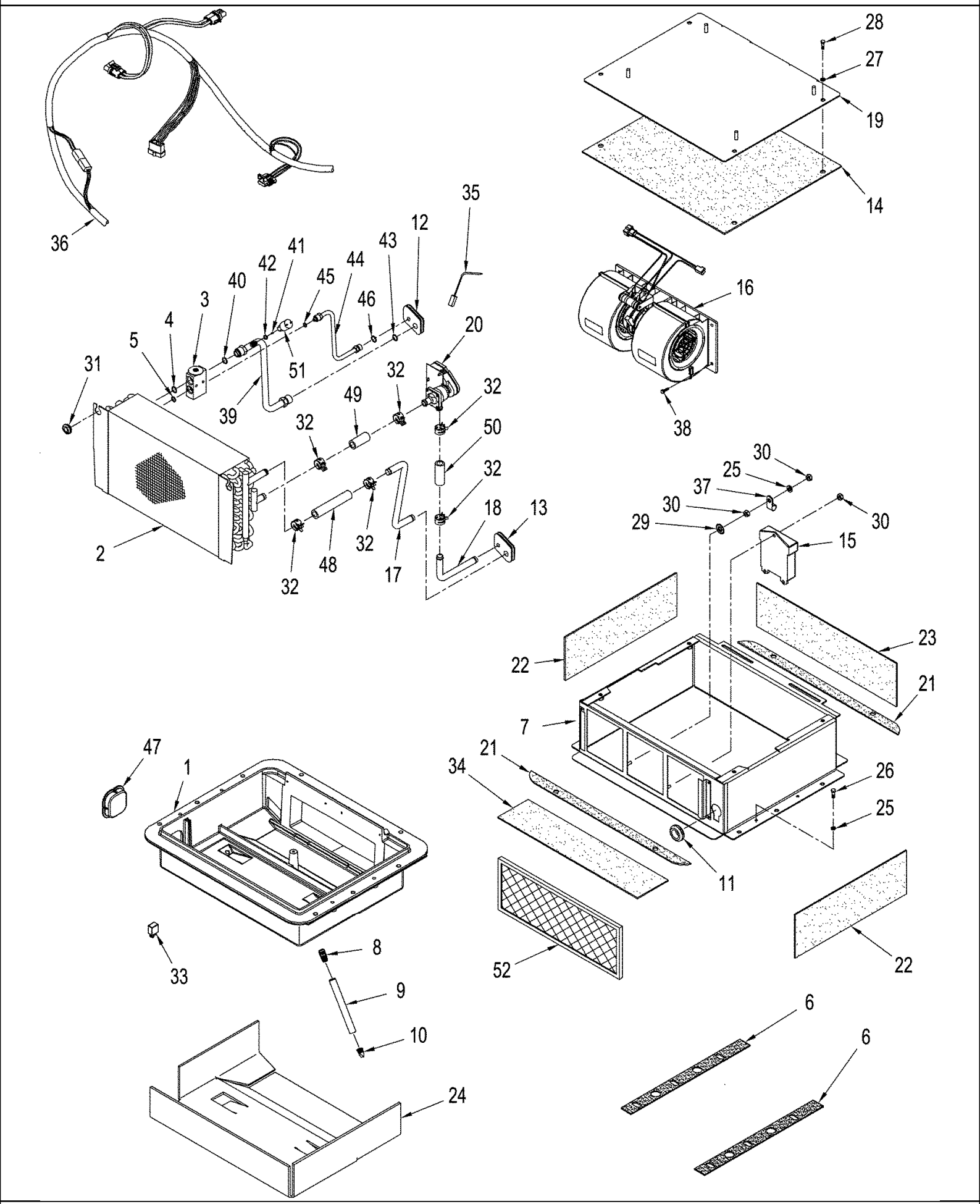

TJ375 TRACTOR - Chassis/Attachments

09 -47 AIR CONDITIONING - CLIMATE CONTROL UNIT WITHOUT AUTO TEMP CONTROL, BSN RVS003801

ссылка	Номер детали	Кол-во	Описание
	87438585	1	AIR CONDITIONER, Inc. 1 - 52
1	322996A1	1	BOX,
2	86990262	1	CORE, Evaporator and Heater, Inc. 4 & 5
3	386535A1	1	VALVE, Expansion
4	128484A1	1	O-RING, 7/16 ID x 1/16
5	128485A1	1	O-RING, 9/16 ID x 1/16
6	322994A1	4	GASKET, Mounting
7	322831A2	1	CASE,
8	1250522C3	2	ELBOW,
9	1977334C1	2	HOSE, 610 mm (24-1/8 in), Cut From : 198091C1
10	109239C2	2	VALVE, Check
11	86637781	1	GROMMET, 1" ID x 1 3/8" Groove Dia,
12	322989A1	1	GROMMET,
13	322990A1	1	GROMMET,
14	322992A1	1	GASKET, Cover
15	87429903	1	CONTROL,
16	323611A1	1	BLOWER,
17	322985A1	1	PIPE, Outlet
18	322987A1	1	PIPE, Inlet
19	323625A1	1	COVER, TOP,
20	427356A1	1	VALVE, CONTROL, Regulator
21	322995A1	4	GASKET, Mounting
22	322993A1	2	GASKET, Housing
23	322991A1	1	GASKET, Housing
24	324484A1	1	INSULATOR,
25	86517328	5	WASHER, LOCK, M6,
26	43133	4	BOLT, Hex, M8 x 80, 8.8,
27	80681	4	WASHER, LOCK, 5/16",
28	43234	4	BOLT, Hex, M8 x 25, 10.9, Cap, HH, CL 10.9, M8 x 1.25 x 25
29	88538	1	WASHER, LOCK, Ext-Int Tooth, 1/4", 1/4"
30	86500688	4	NUT, M6, Cl 10,
31	86637777	2	GROMMET, 1/2" ID x 13/16" Groove Dia, Diag Cut, 13/16 dia
32	1954736C1	6	CLAMP, HOSE, No. 24
33	87414866	1	RELAY, 20 AMP
34	327306A1	1	GASKET, Mounting
35	323016A1	1	SENSOR,
36	327308A1	1	HARNESS,
37	86625035	1	CLAMP, 1/2", Insul, 1/4" Bolt, 1/2 ID
38	86637791	4	SCREW, SELF TAPPING, Hex Wash Hd, #10 x 3/4", No. 10 x 3/4
39	322839A1	1	PIPE, Inc. 40 - 43
40	128485A1	1	O-RING, 9/16 ID x 1/16
41	1250594C2	1	CORE,
42	128483A1	1	O-RING, 5/16 ID x 1/16
43	452007C1	1	O-RING, 5/8 ID x 1/16
44	322840A1	1	PIPE, Inc. 45, 46

09 -47 AIR CONDITIONING - CLIMATE CONTROL UNIT WITHOUT AUTO TEMP CONTROL, BSN RVS003801

ссылка	Номер детали	Кол-во	Описание
45	128484A1	1	O-RING, 5/16 ID x 1/16
46	452005C1	1	O-RING, 5/8 ID x 1/16
47	368313A1	1	PLUG, PLASTIC,
48	1321290C2	1	HOSE, 127 mm (5 in), Cut From : 97252CX
49	324022A1	1	HOSE, 54 mm (2-1/8 in), Cut From : 97252CX
50	324023A1	1	HOSE, 64 mm (2-1/2 in), Cut From : 97252CX
51	284272A3	1	SWITCH, PRESSURE, Low Pressure
52	87408707	1	FILTER, Recirculated

09 -47(01) AIR CONDITIONING - CLIMATE CONTROL UNIT WITHOUT AUTO TEMP CONTROL, ASN RVS003801

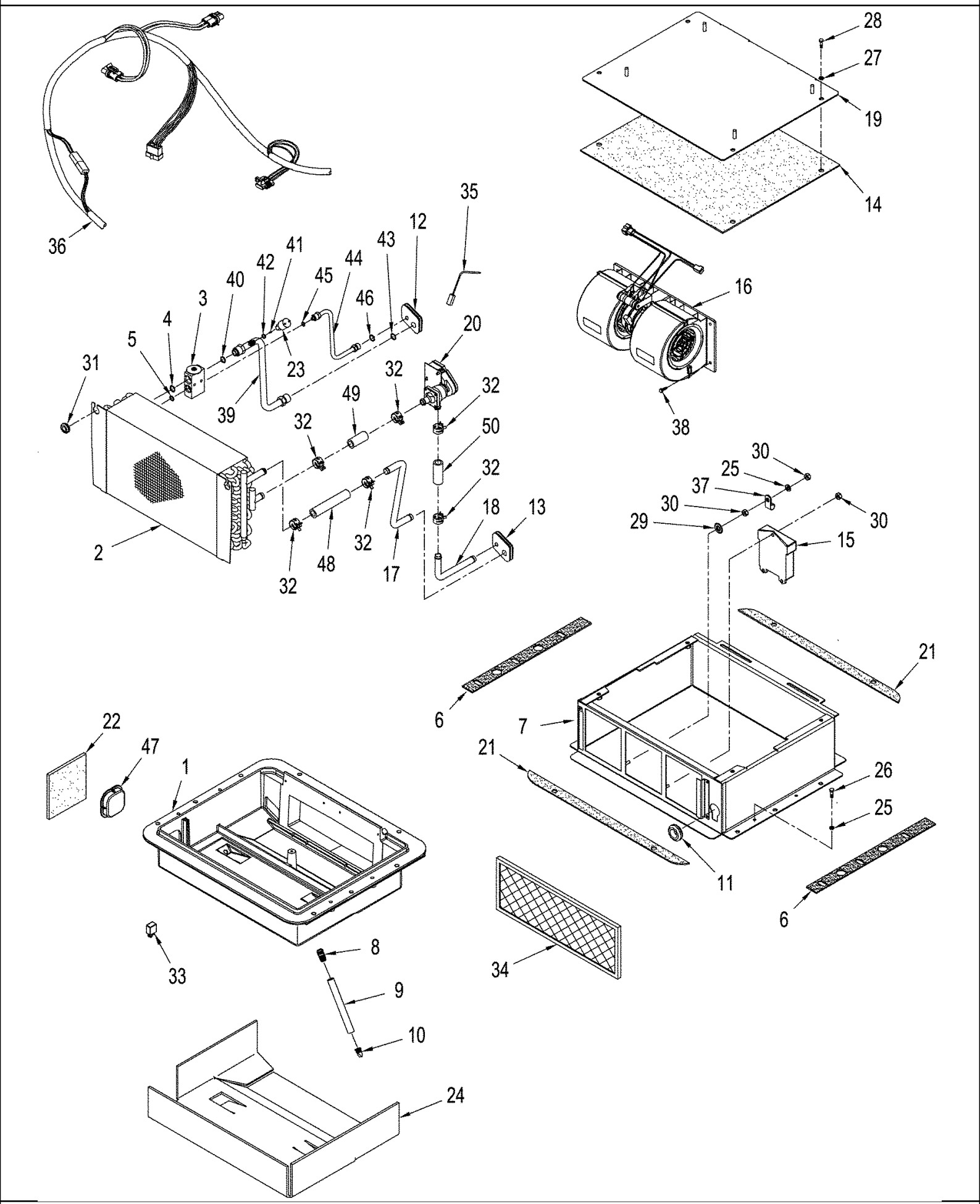

TJ375 TRACTOR - Chassis/Attachments

09 -47(01) AIR CONDITIONING - CLIMATE CONTROL UNIT WITHOUT AUTO TEMP CONTROL, ASN RVS003801

ссылка	Номер детали	Кол-во	Описание
	87441017	1	AIR CONDITIONER, Inc. 1 - 50
1	322996A1	1	BOX, Lower
2	86990262	1	CORE, Evaporator and Heater, Inc. 4 & 5
3	386535A1	1	VALVE, Expansion
4	128484A1	1	O-RING, 7/16 ID x 1/16
5	128485A1	1	O-RING, 9/16 ID x 1/16
6	322994A1	4	GASKET, Mounting
7	87306776	1	CASE ASSY.,
8	1250522C3	2	ELBOW,
9	1977334C1	2	HOSE, 610 mm (24-1/8 in), Cut From : 198091C1
10	109239C2	2	VALVE, Check
11	86637781	1	GROMMET, 1" ID x 1 3/8" Groove Dia,
12	322989A1	1	GROMMET,
13	322990A1	1	GROMMET,
14	87324951	1	GASKET, Cover
15	87429903	1	CONTROL,
16	323611A1	1	BLOWER,
17	322985A1	1	PIPE, Outlet
18	322987A1	1	PIPE, Inlet
19	87306495	1	COVER,
20	427356A1	1	VALVE, CONTROL, Regulator
21	322995A1	4	GASKET, Mounting
22	87306773	1	INSULATION, FOAM,
23	284272A3	1	SWITCH, PRESSURE, Low Pressure
24	324484A1	1	INSULATOR,
25	86517328	5	WASHER, LOCK, M6,
26	43133	4	BOLT, Hex, M8 x 80, 8.8,
27	80681	4	WASHER, LOCK, 5/16",
28	43234	4	BOLT, Hex, M8 x 25, 10.9, Cap, HH, CL 10.9, M8 x 1.25 x 25
29	88538	1	WASHER, LOCK, Ext-Int Tooth, 1/4", 1/4"
30	86500688	4	NUT, M6, Cl 10,
31	86637777	2	GROMMET, 1/2" ID x 13/16" Groove Dia, Diag Cut, 13/16 dia
32	1954736C1	6	CLAMP, HOSE, No. 24
33	87414866	1	RELAY, 20 AMP
34	87408707	1	FILTER, Recirculated
36	327308A1	1	HARNESS,
37	86625035	1	CLAMP, 1/2", Insul, 1/4" Bolt, 1/2 ID
38	86637791	4	SCREW, SELF TAPPING, Hex Wash Hd, #10 x 3/4", No. 10 x 3/4
39	322839A1	1	PIPE, Inc. 40 - 43
40	128485A1	1	O-RING, 9/16 ID x 1/16
41	1250594C2	1	CORE,
42	128483A1	1	O-RING, 5/16 ID x 1/16
43	452007C1	1	O-RING, 5/8 ID x 1/16
44	322840A1	1	PIPE, Inc. 45, 46
45	128484A1	1	O-RING, 5/16 ID x 1/16

09 -47(01) AIR CONDITIONING - CLIMATE CONTROL UNIT WITHOUT AUTO TEMP CONTROL, ASN RVS003801

ссылка	Номер детали	Кол-во	Описание
46	452005C1	1	O-RING, 5/8 ID x 1/16
47	368313A1	1	PLUG, PLASTIC,
48	1321290C2	1	HOSE, 127 mm (5 in), Cut From : 97252CX
49	324022A1	1	HOSE, 54 mm (2-1/8 in), Cut From : 97252CX
50	324023A1	1	HOSE, 64 mm (2-1/2 in), Cut From : 97252CX

09 -48 AIR CONDITIONING - AIR FILTER HOUSING ASSEMBLY

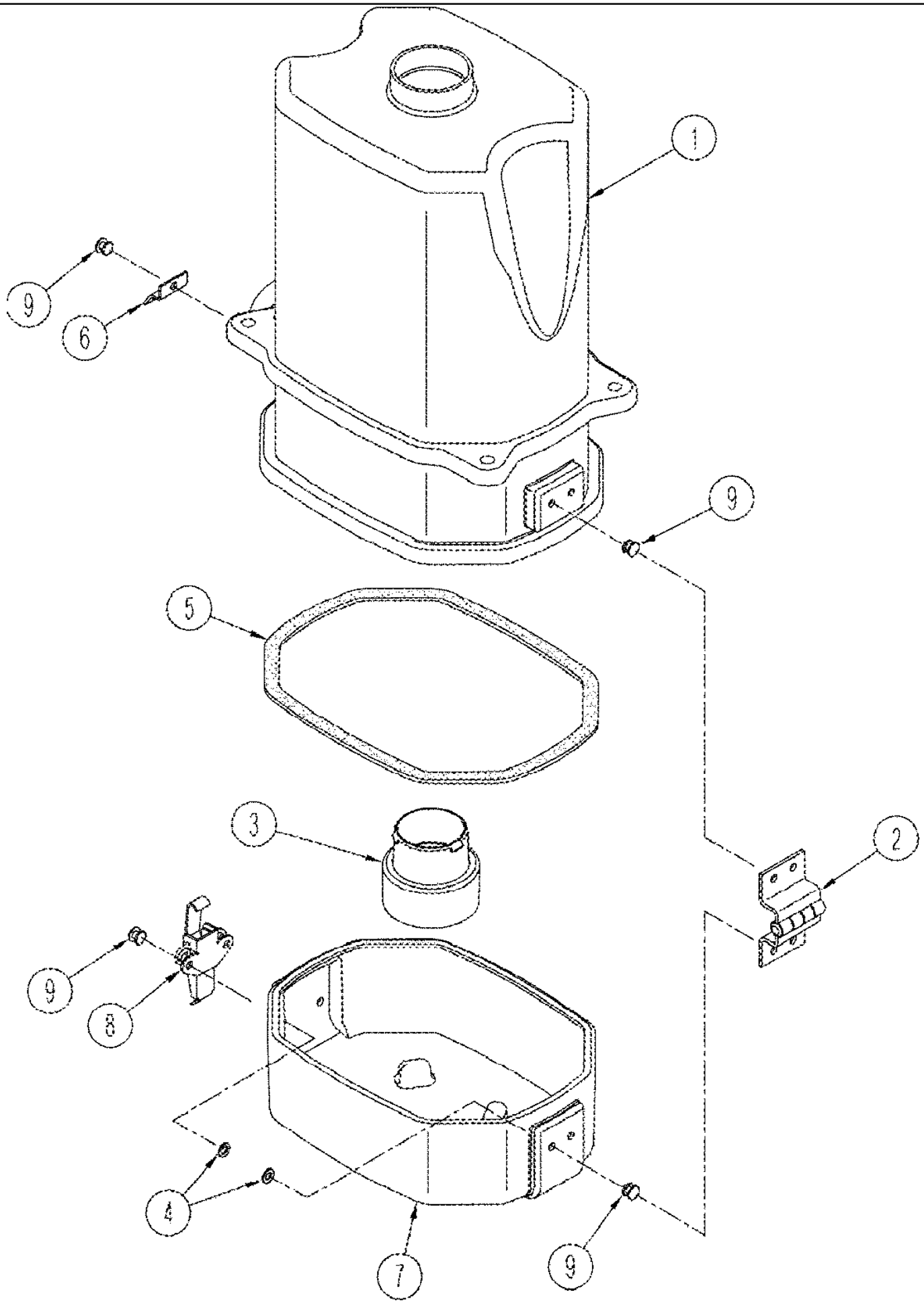

TJ375 TRACTOR - Chassis/Attachments

09 -48 AIR CONDITIONING - AIR FILTER HOUSING ASSEMBLY

ссылка	Номер детали	Кол-во	Описание
	319970A3	1	HOUSING, Air Filter, Inc. 1 - 9
1	NSS	1	NOT SERVICED SEPARATELY, HOUSING, Filter, Upper
2	319969A1	1	HINGE,
3	307016A1	1	COUPLING,
4	86625261	7	WASHER, M5 x 10 x 1, 5,5 x 10 x 1 mm
5	359585A2	1	SEAL, Cut From : 87432208
6	307021A2	1	CLIP,
7	NSS	1	NOT SERVICED SEPARATELY, HOUSING, Filter, Lower
8	400193A1	1	LATCH,
9	86637655	7	RIVET, Pop, 3/16" x .450", 5/32 x 43/64

09 -49 AIR CONDITIONING - BLOWER ASSEMBLY

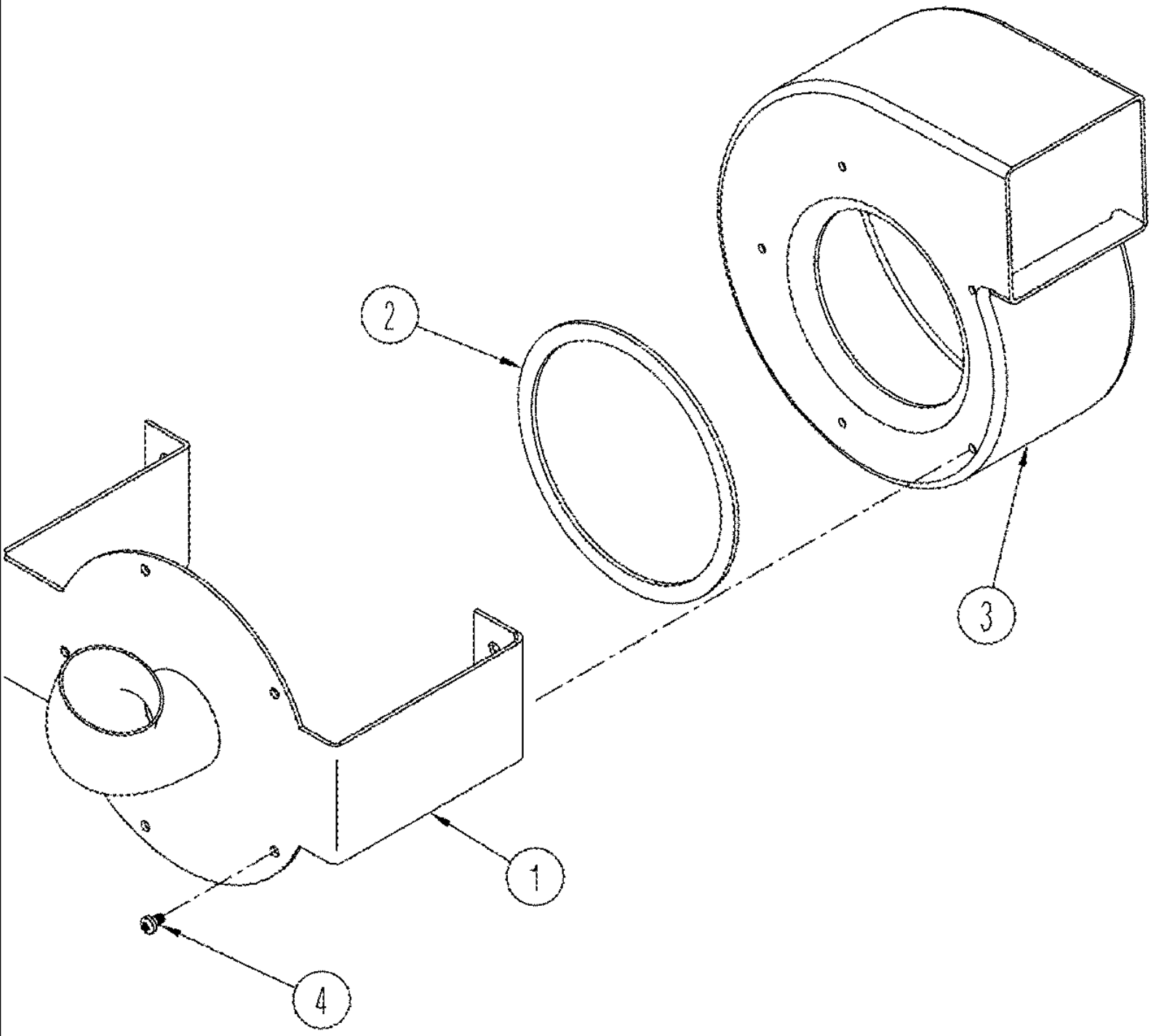

TJ375 TRACTOR - Chassis/Attachments

09 -49 AIR CONDITIONING - BLOWER ASSEMBLY

ссылка	Номер детали	Кол-во	Описание
1	307104A3	1	SUPPORT,
2	313282A1	1	SEAL, Cut From : 187874C1
3	175435A3	1	BLOWER, Suction / Pressurizer
4	86639262	5	SCREW, Cross Pan Hd, M5 x 8, M5 x 8

TJ375 TRACTOR - Chassis/Attachments

09 -50 WEIGHTS - FRONT FRAME, BSN RVS003917

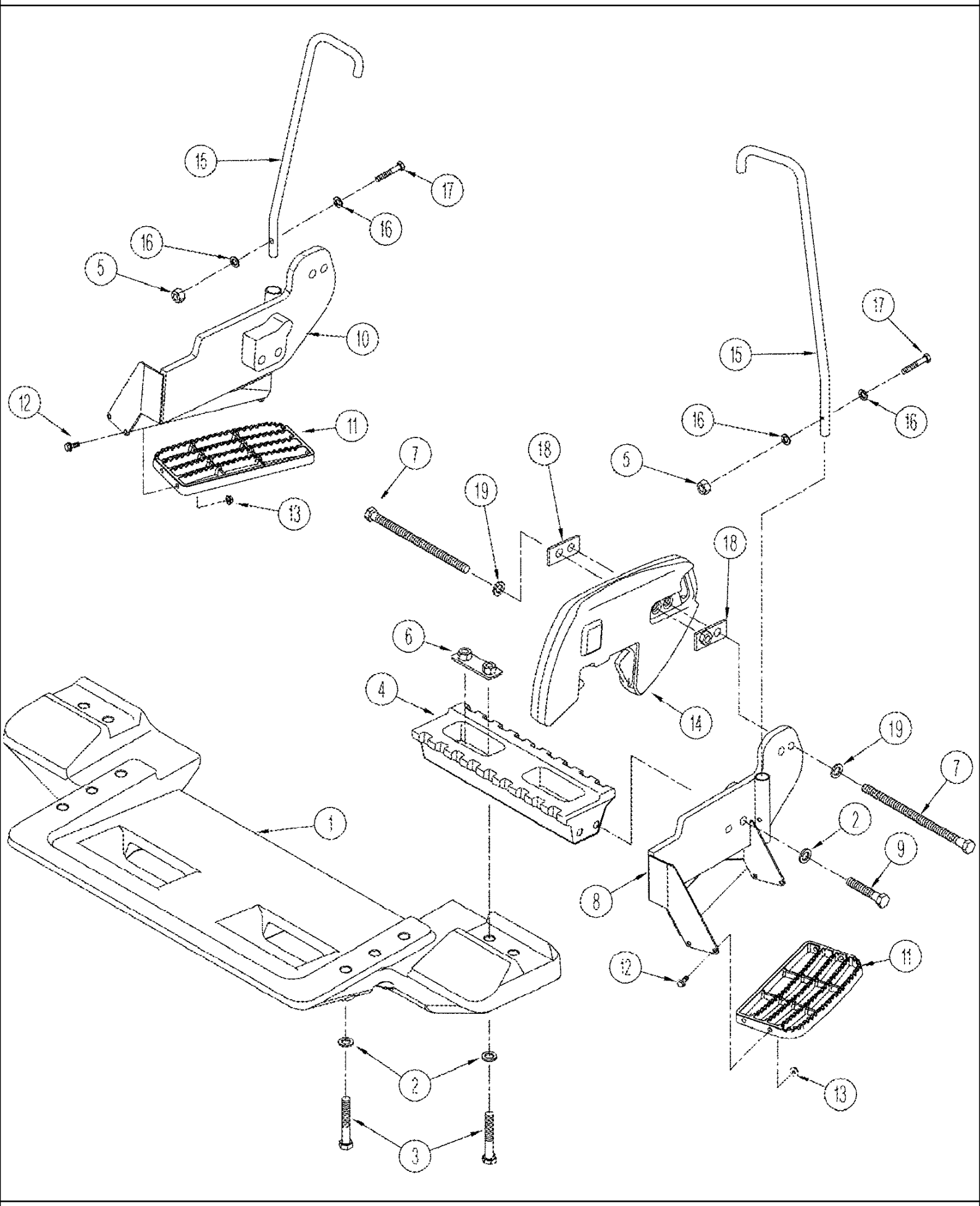

TJ375 TRACTOR - Chassis/Attachments

09 -50 WEIGHTS - FRONT FRAME, BSN RVS003917

ссылка	Номер детали	Кол-во	Описание
1	413310A1	1	HANGER,
2	86625260	14	WASHER, M20 x 37.5 x 4, HT, 22 x 37 x 4 mm
3	86639145	10	BOLT, Hex, M20 x 130, 10.9, CL 10.9, M20 x 130
4	413312A1	2	INSERT, Nine Weight
5	86500689	2	NUT, M10, Cl 10, M10; 10.9
6	413313A1	2	BRACKET,
7	86639034	4	BOLT, Hex, M16 x 320, 10.9, Full Thd, M16 x 320; 10.9
8	413314A1	1	PLATE, Weight, RH
9	86639035	4	BOLT, Hex, M20 x 110, 10.9, Full Thd, M20 x 110; 10.9
10	413315A1	1	PLATE, Weight, Left-Hand
11	257375A1	2	STEP,
12	274251	8	BOLT, Hex Serr Flg, M10 x 25,
13	43435	8	NUT, M10, Flg Ser,
14	403140A1	AR	WEIGHT, 45Kg (100 lb)
15	413316A1	2	GRAB RAIL,
16	86625252	4	WASHER, M10 x 21.5 x 2.5, HT, 11 x 21 x 2,5 mm
17	86508619	2	BOLT, Hex, M10 x 60, 10.9,
18	229483A1	4	RETAINER,
19	86639326	4	WASHER, M17.5 x 34 x 5, HT, 17,5 x 34 x 5 mm

09 -50(01) WEIGHTS - FRONT FRAME, ASN RVS003917

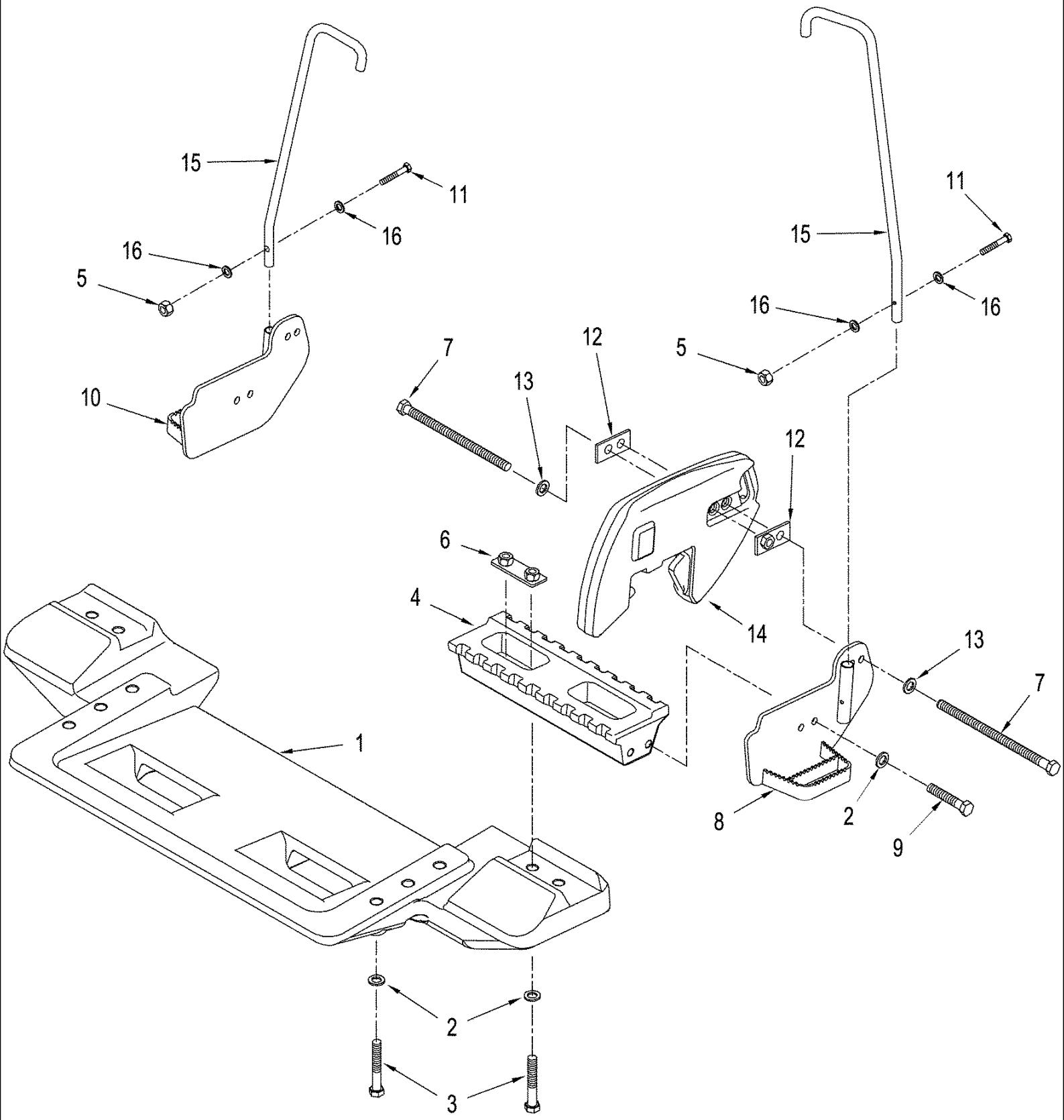

TJ375 TRACTOR - Chassis/Attachments

09 -50(01) WEIGHTS - FRONT FRAME, ASN RVS003917

ссылка	Номер детали	Кол-во	Описание
1	413310A1	1	HANGER,
2	86625260	14	WASHER, M20 x 37.5 x 4, HT, 22 x 37 x 4 mm
3	86639145	10	BOLT, Hex, M20 x 130, 10.9, CL 10.9, M20 x 130
4	413312A1	2	INSERT, Nine Weight
5	86500689	2	NUT, M10, Cl 10, M10; 10.9
6	413313A1	2	BRACKET,
7	86639034	4	BOLT, Hex, M16 x 320, 10.9, Full Thd, M16 x 320; 10.9
8	87309541	1	PLATE, Weight, RH
9	9843495	4	BOLT, Hex, M20 x 60, 10.9,
10	87309542	1	PLATE, Weight, LH
11	86508619	2	BOLT, Hex, M10 x 60, 10.9,
12	229483A1	4	RETAINER,
13	86639326	4	WASHER, M17.5 x 34 x 5, HT, 17,5 x 34 x 5 mm
14	403140A1	AR	WEIGHT, 45Kg (100 lb)
15	413316A1	2	GRAB RAIL,
16	86625252	4	WASHER, M10 x 21.5 x 2.5, HT, 11 x 21 x 2,5 mm

09 -51 WEIGHTS - REAR FRAME

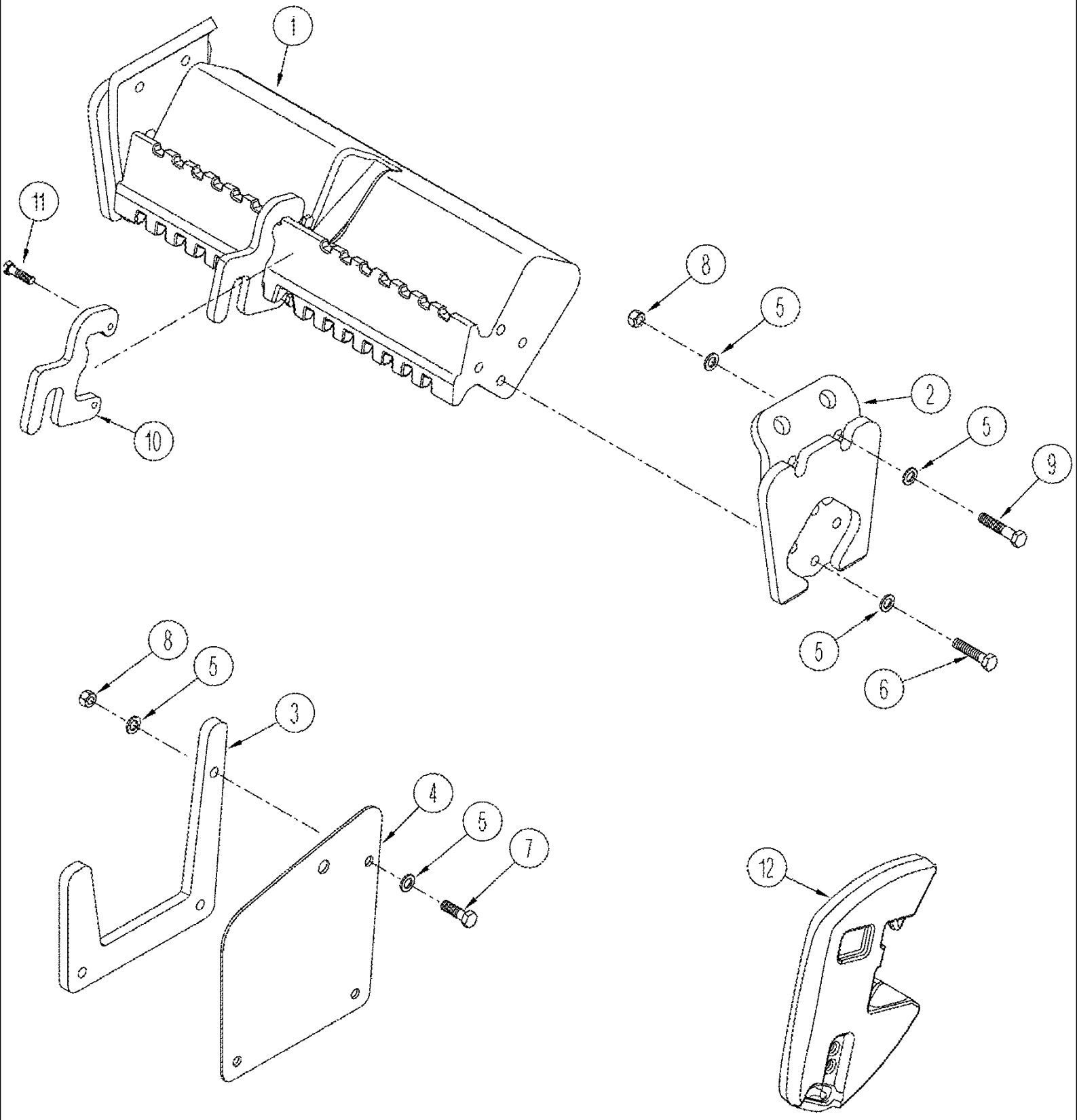

TJ375 TRACTOR - Chassis/Attachments

09 -51 WEIGHTS - REAR FRAME

ссылка	Номер детали	Кол-во	Описание
1	413389A1	1	WEIGHT, , Order From Machinery Price List
2	413390A1	2	BRACKET,
3	413391A2	2	BRACKET,
4	413392A2	2	PLATE,
5	86625260	24	WASHER, M20 x 37.5 x 4, HT, 22 x 37 x 4 mm
6	9846950	8	BOLT, Hex, M20 x 90, 10.9, Cap, HH, M20 x 2.5 x 90, CL10.9
7	412641	6	BOLT, Hex, M20 x 70, 10.9,
8	9847024	8	NUT, M20, Cl 10,
9	9843612	2	BOLT, Hex, M20 x 100, 10.9, Cap, HH, M20 x 2.5 x 100, CL10.9
10	413393A1	2	PLATE,
11	374835	4	BOLT, Hex, M16 x 40, 10.9, Hex, M16 x 40, 10.9
12	403140A1	AR	WEIGHT, 45Kg (100 lb)

09 -52 WEIGHTS - WHEEL

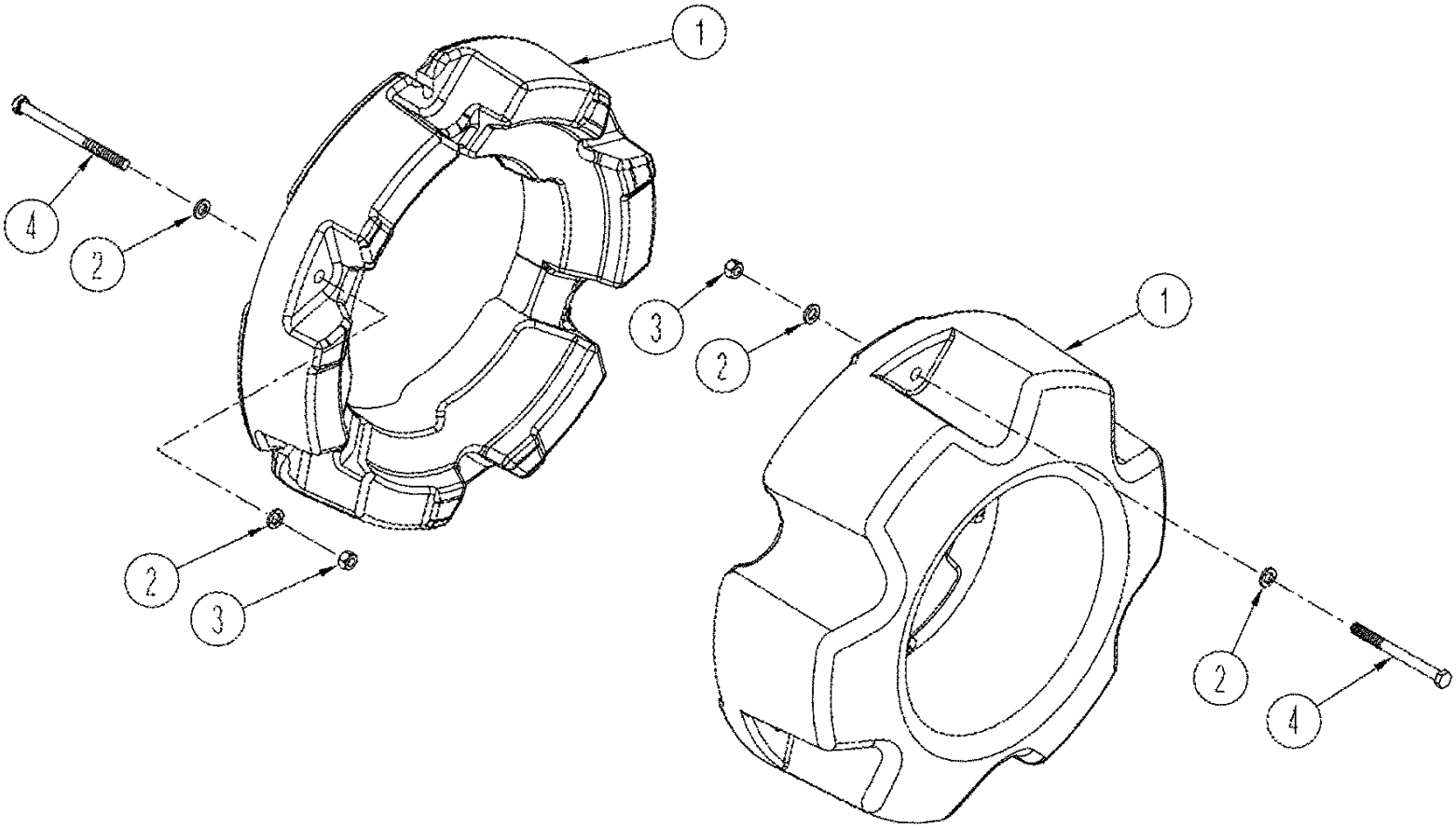

TJ375 TRACTOR - Chassis/Attachments

09 -52 WEIGHTS - WHEEL

ссылка	Номер детали	Кол-во	Описание
1	405829A1	2	WEIGHT, 500 lb, Order From Machinery Price List
1	405830A1	2	WEIGHT, 1000 lb, Order From Machinery Price List
2	86625266	12	WASHER, M17.5 x 30 x 4, HT,
3	412066	6	NUT, LOCK, M16 x 2, Cl 8, M16 x 2
4	86639152	6	BOLT, Hex, M16 x 200, 10.9, M16 x 200; 10.9, Use With 500 lbs. Weight
4	43281	6	BOLT, Hex, M16 x 120, 10.9, Cap, HH, CL 10.9, M16 x 2 x 120, Use With 1000 lbs. Weight

09 -53 STORAGE BOX

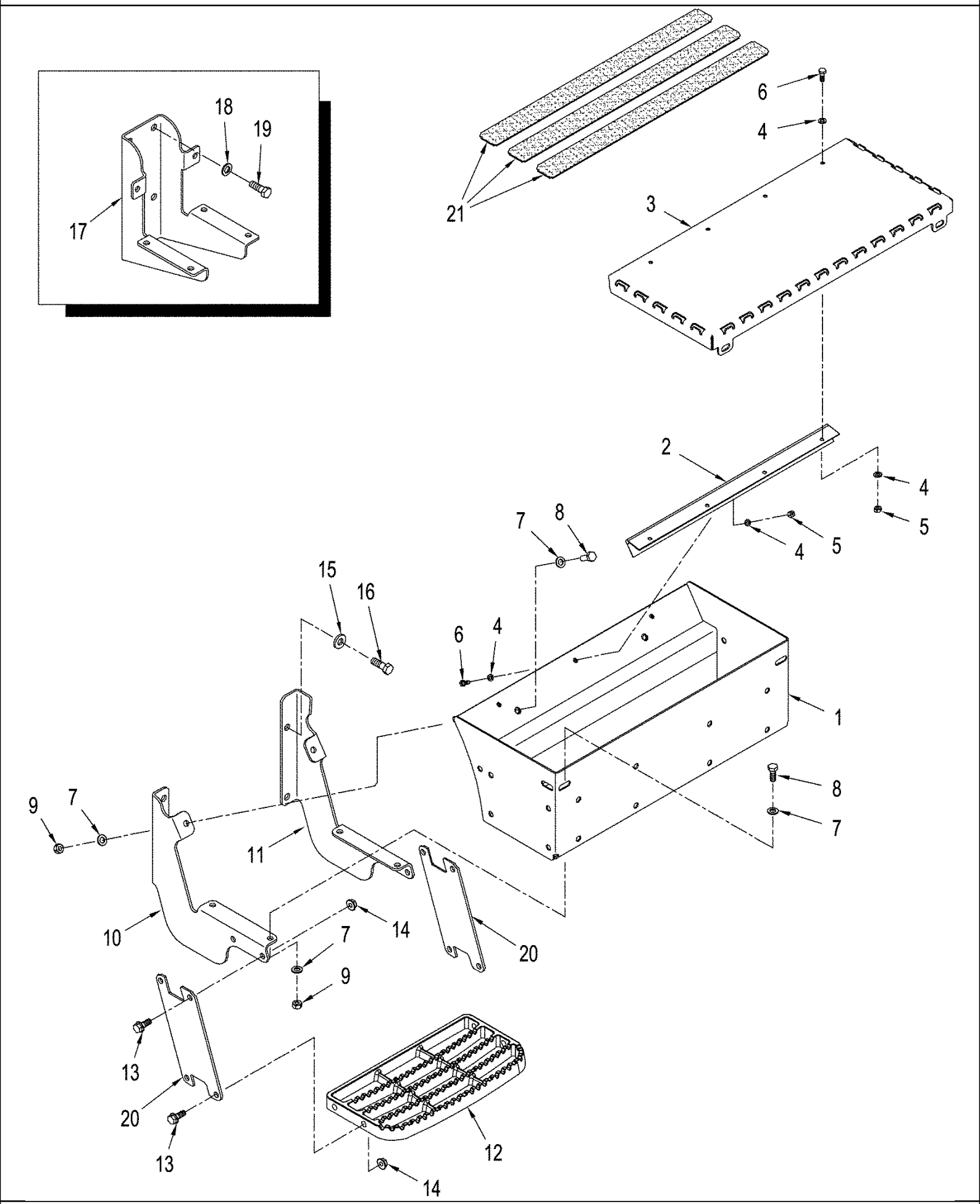

TJ375 TRACTOR - Chassis/Attachments

09 -53 STORAGE BOX

ссылка	Номер детали	Кол-во	Описание
1	87325332	1	BOX,
2	435534A1	1	HINGE,
3	87307236	1	STEP,
4	86624181	14	WASHER, M6, 6,6 x 12 x 1,6 mm
5	393392	7	NUT, LOCK, M6 x 1, Cl 8, M6 x 1.0, CL10
6	86639037	7	BOLT, Hex, M6 x 16, 10.9, M6 x 16; 10.9
7	86624176	12	WASHER, M10 x 20 x 2, M10
8	9846677	6	BOLT, Hex, M10 x 25, 10.9, Full Thd, Cap, HH, M10 x 1.5 x 25, CL10.9
9	86500689	6	NUT, M10, Cl 10, M10, CL10.9
10	410814A1	1	BRACKET, , Without Weights
11	410815A2	1	BRACKET, , Without Weights
12	87301185	1	STEP, Lower
13	274251	8	BOLT, Hex Serr Flg, M10 x 25,
14	43435	8	NUT, M10, Flg Ser,
15	86625256	3	WASHER, M12 x 28.5 x 4, HT,
16	9824642	3	BOLT, Hex, M12 x 35, 10.9,
17	410817A1	1	BRACKET, , With Weights
18	86624177	3	WASHER, M12 x 24 x 2.5, 13,5 x 24 x 2,5 mm
19	9824642	3	BOLT, Hex, M12 x 35, 10.9,
20	410816A1	2	BRACKET,
21	87307237	3	STRIP, ANTI-SKID,

09 -54 TOW CABLE

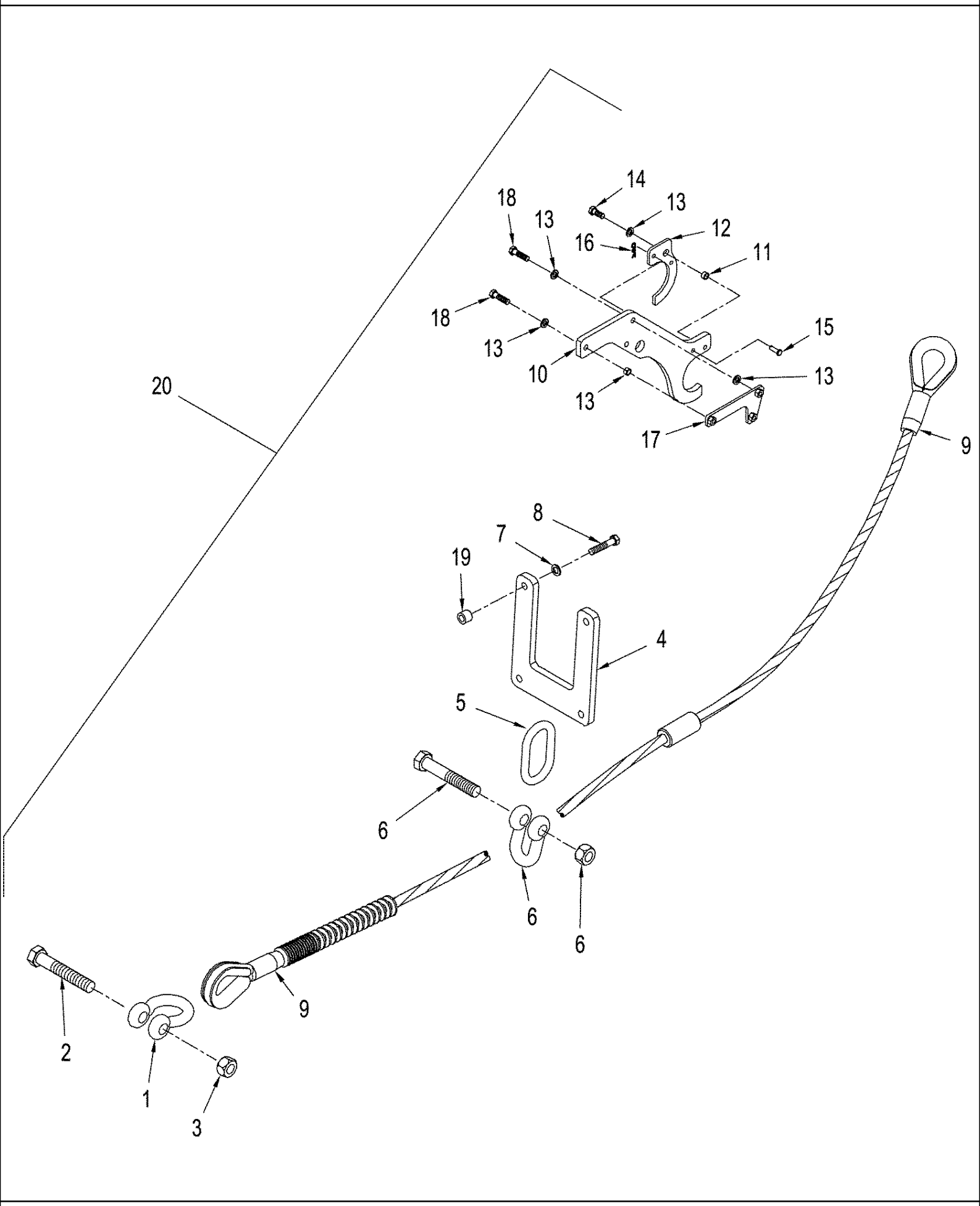

TJ375 TRACTOR - Chassis/Attachments

09 -54 TOW CABLE

ссылка	Номер детали	Кол-во	Описание
1	369837A1	1	SHACKLE,
2	86637794	1	BOLT, Hex, 1 1/2"-6 x 10", G8, 1-1/2 x 10; 8
3	86637798	1	NUT, 1 1/2"-6, G8,
4	408793A1	1	PLATE,
5	409753A1	1	LINK,
6	369838A1	1	SHACKLE,
7	86625260	4	WASHER, M20 x 37.5 x 4, HT, 22 x 37 x 4 mm
8	9843612	4	BOLT, Hex, M20 x 100, 10.9, Cap, HH, M20 x 2.5 x 100, CL10.9
9	379523A1	1	CABLE ASSY.,
10	408795A1	1	HOOK, Side
11	435501A1	1	SPACER,
12	408796A1	1	LATCH, Side Hook
13	86639326	7	WASHER, M17.5 x 34 x 5, HT, 17,5 x 34 x 5 mm
14	374835	1	BOLT, Hex, M16 x 40, 10.9, Hex, M16 x 40, 10.9
15	86639102	1	SPLIT PIN/SAFETY PIN, Clevis, 12 x 40 mm
16	435425A1	1	PIN, 1/8
17	385380A1	1	PLATE ASSY.,
18	9847468	3	BOLT, Hex, M16 x 70, 10.9, Hex, M16 x 70, 10.9
19	409751A1	4	SPACER, M20 x 40, TJ375, TJ425 Manual Shift Transmission
20	719546003	1	KIT, Tow Cable, Inc. 1 - 19

09 -56 MOUNTING - FLEX CONTROL, BSN RVS002823

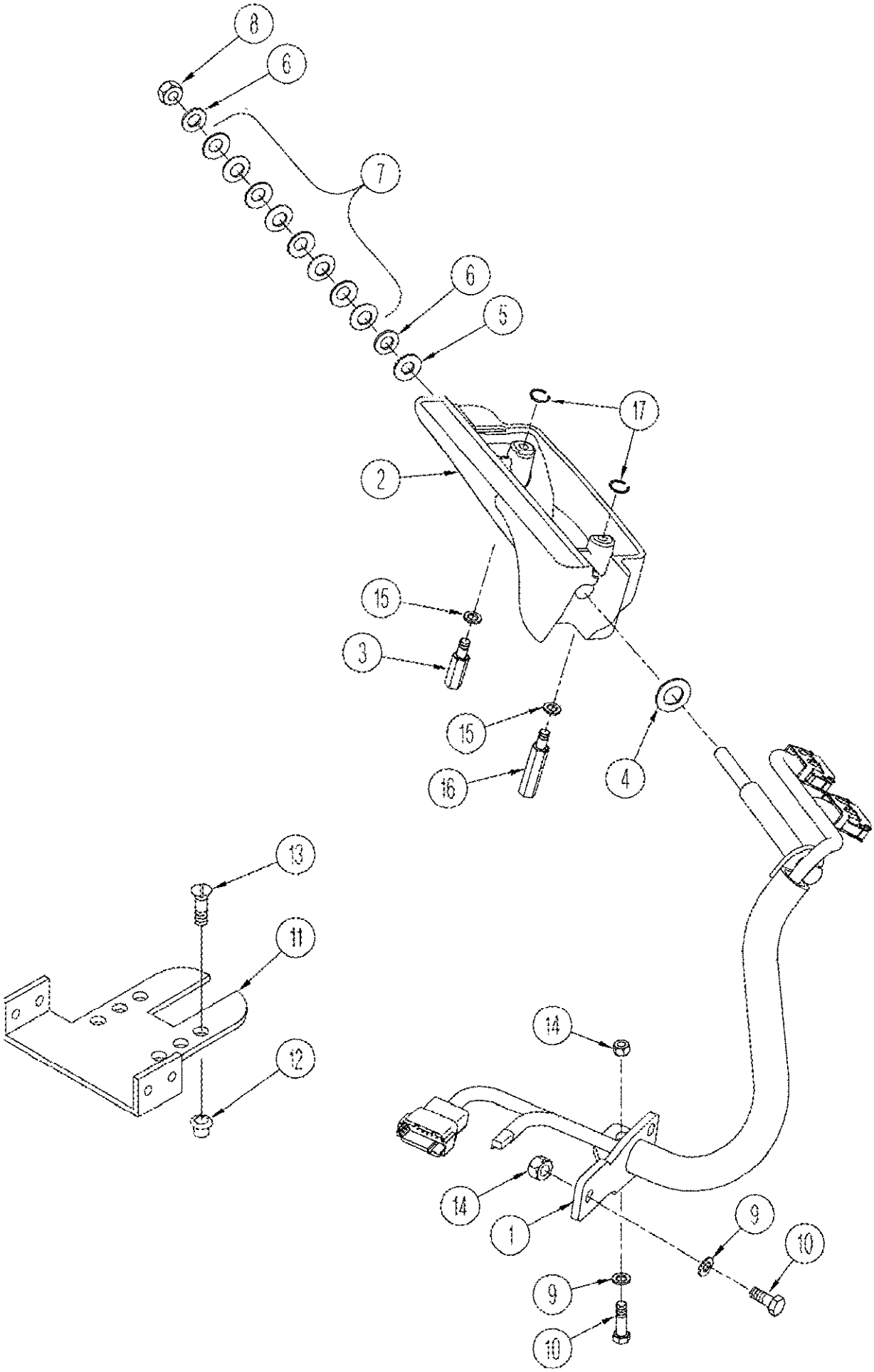

TJ375 TRACTOR - Chassis/Attachments

09 -56 MOUNTING - FLEX CONTROL, BSN RVS002823

ссылка	Номер детали	Кол-во	Описание
1	440495A1	1	TUBE,
2	366774A2	1	SUPPORT,
3	406719A2	1	SCREW, Short
4	375696A1	1	WASHER,
5	375695A1	1	WASHER,
6	86624176	2	WASHER, M10 x 20 x 2, M10
7	375697A1	8	WASHER, Belleville
8	86512554	1	NUT, LOCK, M10 x 1.5, Cl 10, CL10, M10 x 1.5
9	86624184	3	WASHER, M8 x 16 x 1.6, 9 x 17 x 1,6 mm
10	43233	3	BOLT, Hex, M8 x 20, 10.9, Cap, HH, CL 10.9, M8 x 1.25 x 20
11	279293A2	1	SUPPORT, Beacon
12	D135342	4	ISOLATOR, Isolator
13	86511978	4	SCREW, Cross Flat Hd, 5/16"-18 x 1", Flat Hd, CSK, 5/16"-18 x 1"
14	43362	3	NUT, M8, Cl 10,
15	86624181	2	WASHER, M6, 6,6 x 12 x 1,6 mm
16	406720A2	1	SCREW, Long
17	86632599	2	CIRCLIP, M5, E

09 -56(01) MOUNTING - FLEX CONTROL, BTW RVS002823 & RVS003801

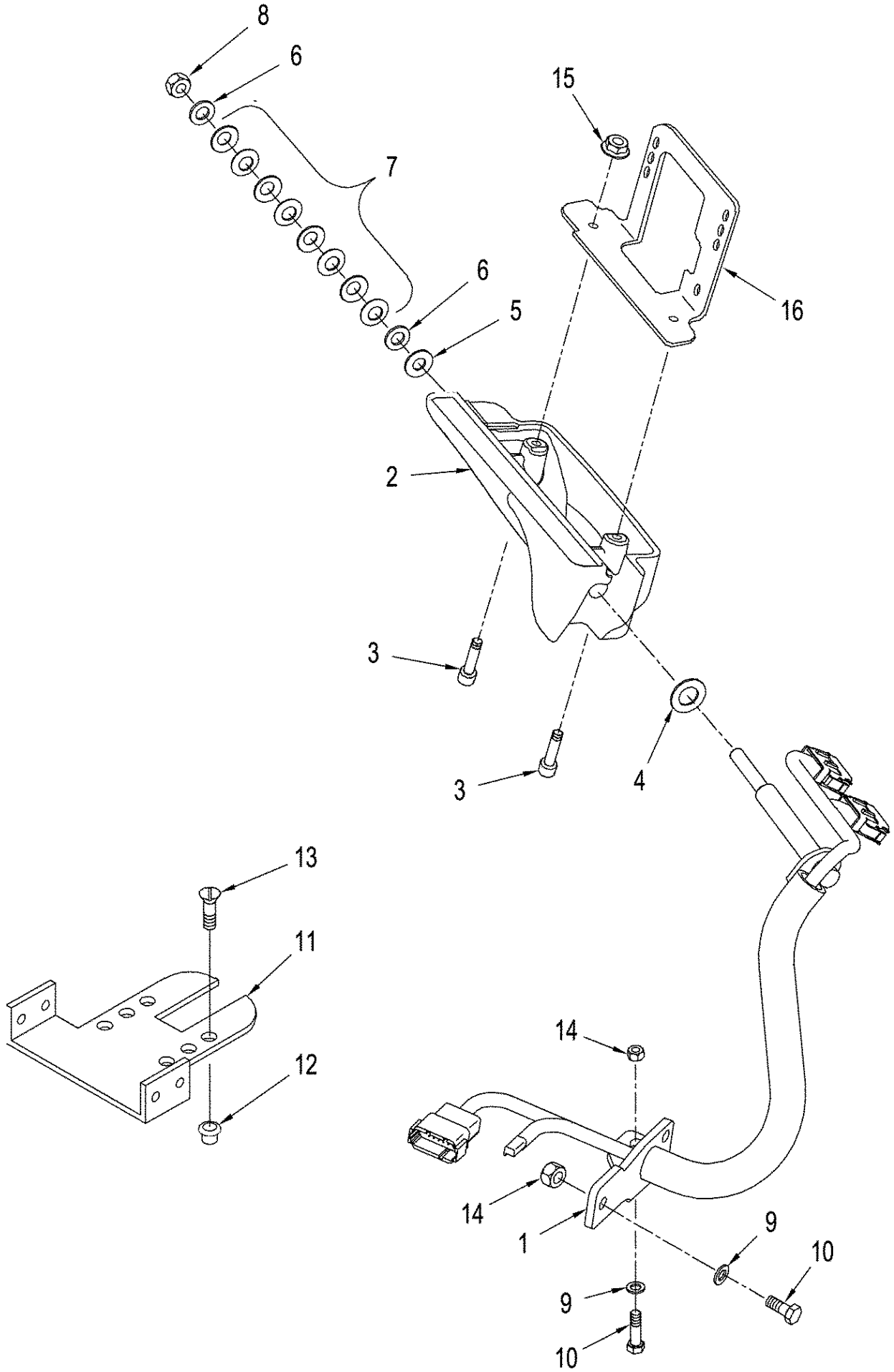

TJ375 TRACTOR - Chassis/Attachments

09 -56(01) MOUNTING - FLEX CONTROL, BTW RVS002823 & RVS003801

ссылка	Номер детали	Кол-во	Описание
1	440495A1	1	TUBE,
2	366774A2	1	SUPPORT,
4	375696A1	1	WASHER,
5	375695A1	1	WASHER,
6	86624176	2	WASHER, M10 x 20 x 2, M10
7	375697A1	8	WASHER, Belleville
8	86512554	1	NUT, LOCK, M10 x 1.5, Cl 10, CL10, M10 x 1.5
9	86624184	3	WASHER, M8 x 16 x 1.6, 9 x 17 x 1,6 mm
10	43233	3	BOLT, Hex, M8 x 20, 10.9, Cap, HH, CL 10.9, M8 x 1.25 x 20
11	279293A2	1	SUPPORT, Beacon
12	D135342	4	ISOLATOR, Isolator
13	86511978	4	SCREW, Cross Flat Hd, 5/16"-18 x 1", Flat Hd, CSK, 5/16"-18 x 1"
14	43362	3	NUT, M8, Cl 10,
15	86511444	2	NUT, M6, Flg Ser,
16	436617A1	1	BRACKET,
3	14305221	2	SCREW, Hex Soc Hd, M6 x 16, 8.8,

09 -56(02) MOUNTING - FLEX CONTROL, ASN RVS003801

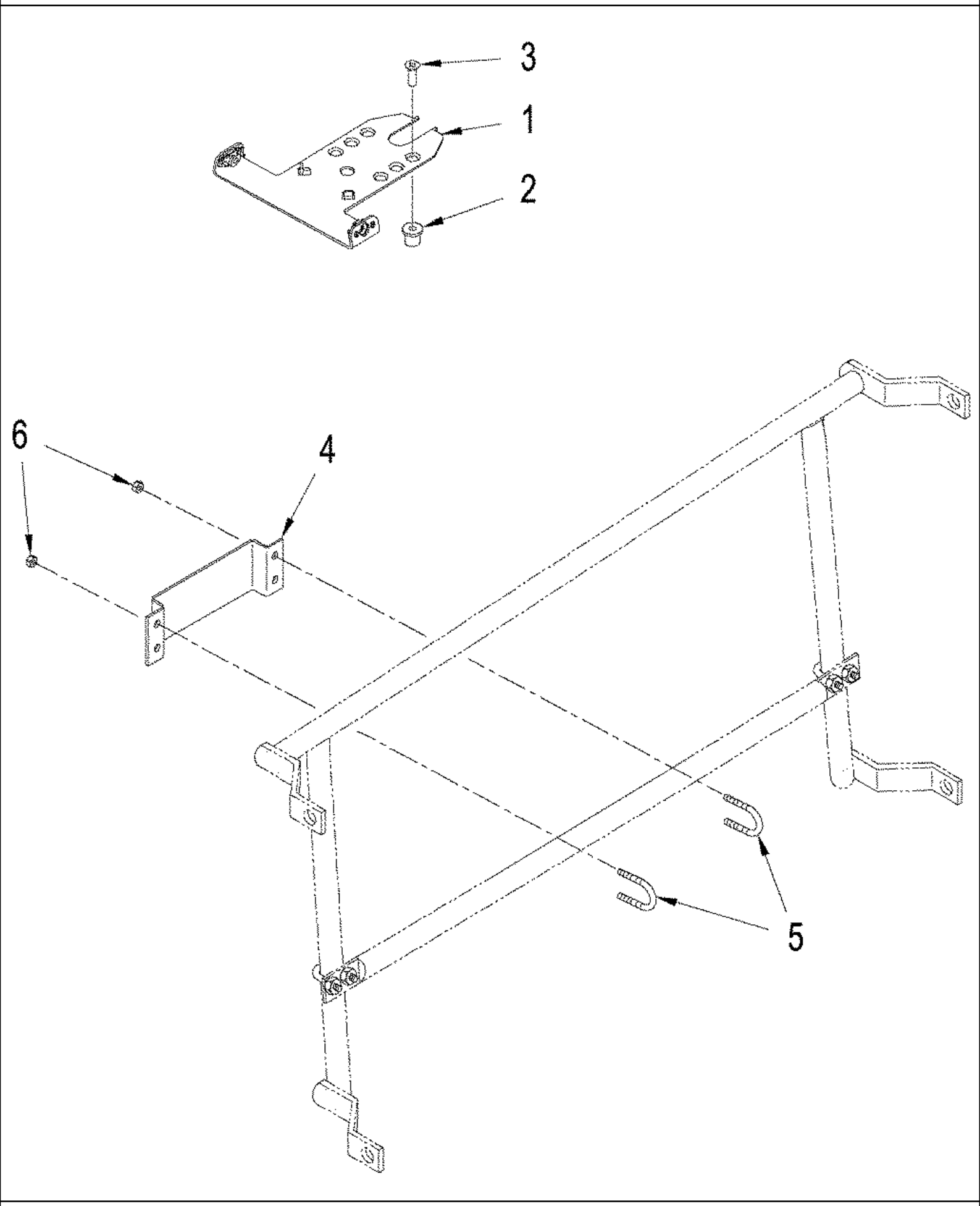

TJ375 TRACTOR - Chassis/Attachments

09 -56(02) MOUNTING - FLEX CONTROL, ASN RVS003801

ссылка	Номер детали	Кол-во	Описание
1	279293A2	1	SUPPORT, Beacon
2	D135342	4	ISOLATOR,
4	87414515	1	MOUNTING PARTS, AFS Display
5	19-6258	2	U-BOLT,
6	425-104	4	NUT, 1/4"-20, G5,
3	14305221	4	SCREW, Hex Soc Hd, M6 x 16, 8.8,

09 -57 DECALS - HOOD, BSN RVS001801

TJ375 TRACTOR - Chassis/Attachments

09 -57 DECALS - HOOD, BSN RVS001801

ссылка	Номер детали	Кол-во	Описание
1	435779A1	1	DECAL, Hood, LH, TJ375
2	435780A1	1	DECAL, Hood, RH, TJ375
3	443755A1	1	DECAL, Hood, LH, TJ425
4	443756A1	1	DECAL, Hood, RH, TJ425
5	443556A1	1	DECAL, Hood, LH, TJ450
6	443557A1	1	DECAL, Hood, RH, TJ450
7	441882A1	2	DECAL, Heavy Duty, TJ375 Heavy Duty

09 -57(01) DECALS - HOOD, ASN RVS001801

TJ375 TRACTOR - Chassis/Attachments

09 -57(01) DECALS - HOOD, ASN RVS001801

ссылка	Номер детали	Кол-во	Описание
1	86990803	1	DECAL, Hood, LH, TJ375
2	86990804	1	DECAL, Hood, RH, TJ375
3	86990805	1	DECAL, Hood, LH, TJ425
4	86990806	1	DECAL, Hood, RH, TJ425
5	86990807	1	DECAL, Hood, LH, TJ450
6	86990808	1	DECAL, Hood, RH, TJ450
7	441882A1	2	DECAL, Heavy Duty, TJ375 Heavy Duty
8	87417415	1	DECAL, Hood, LH, TJ500, ASN RVS002701
9	87417416	1	DECAL, Hood, RH, TJ500, ASN RVS002701

09 -58 DECALS

1

WARNING

AVOID INJURY OR DEATH

BEFORE STARTING ENGINE:

1. Read the operator's manual for safety information and operating instructions.
2. Read all tractor safety signs.
3. Be sure other people are clear of tractor and equipment.
4. Start engine only from seat.
5. Shields are for your protection. Keep them in place.

OPERATION:

1. Always buckle and adjust seat belt.
2. No riders on tractor or equipment.
3. Training seat for training operators only, do not allow children to ride or operate tractor.
4. Keep hands, feet and clothing away from power driven parts.
5. For road travel, use flashing warning lamps and keep the SMV emblem visible.
6. Do not pull with elastic tow ropes. Elastic stores energy and sudden release will cause an uncontrolled rope recoil.
7. Stay clear of hinge area when engine is running. Never turn steering wheel unless everyone is clear of equipment

TRACTORS CAN BE UPSET:

1. Reduce speed on turns and rough ground. Avoid steep slopes.
2. Avoid rear upset. Pull only from drawbar, never higher.

WHEN TRACTOR HAS STOPPED:

1. Engage park brake.
2. Lower implement to ground.
3. Disengage PTO, stop engine and wait for all movement to stop before servicing or cleaning equipment.

329926A1

2

WARNING

NO CLEARANCE FOR PERSON WHEN TRACTOR TURNS

TO PREVENT PERSONAL INJURY:

Stay clear of hinge area when engine is running.
Shut off engine before servicing hinge area.
Install articulation cylinder locking blocks before lifting tractor, transporting tractor on another vehicle, performing maintenance in hinge area or operating stationary PTO equipment.
Be sure to remove locking blocks before driving tractor.
Keep driveline shields in place.

3

4

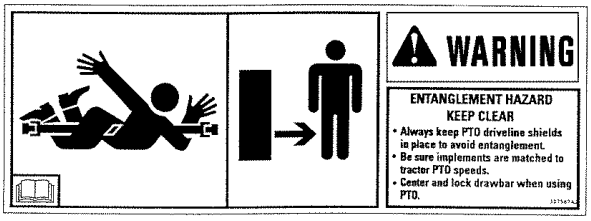

5

9

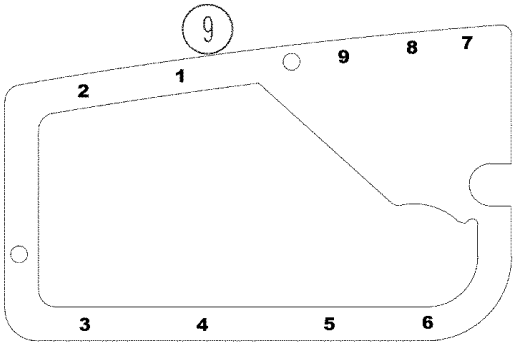

6

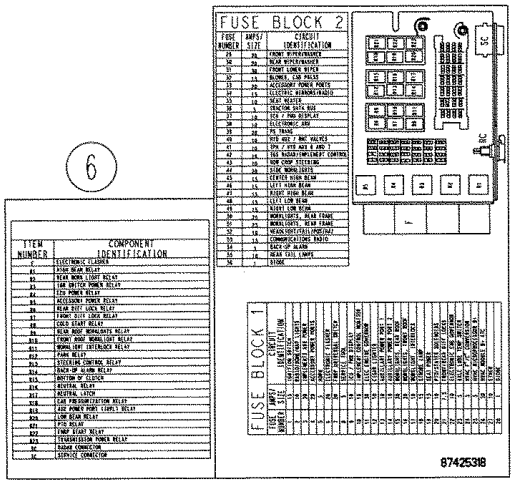

ITEM NUMBER	COMPONENT IDENTIFICATION
1	ELECTRONIC FLASHER
R1	HIGH BEAM RELAY
R2	REAR WORK LIGHT RELAY
R3	IGN SWITCH POWER RELAY
R4	ECU POWER RELAY
R5	ACCESSORY POWER RELAY
R6	REAR DIFF LOCK RELAY
R7	FRONT DIFF LOCK RELAY
R8	LOW BEAM RELAY
R9	REAR ROOF WORKLIGHTS RELAY
R10	FRONT ROOF WORKLIGHT RELAY
R11	WORKLIGHT INTERLOCK RELAY
R12	CAB PRESSURIZATION RELAY
R13	TDC START RELAY
R14	PTO RELAY
R15	COLD START RELAY
R16	MANUAL TRANS LOW RELAY
R17	MANUAL TRANS HIGH RELAY
R18	SPARE
R19	SPARE
R20	SPARE
R21	OPEN
R22	OPEN
R23	AIR POWER PORT (OPEN) RELAY
DC	RADAR CONNECTOR
SC	SERVICE CONNECTOR

7

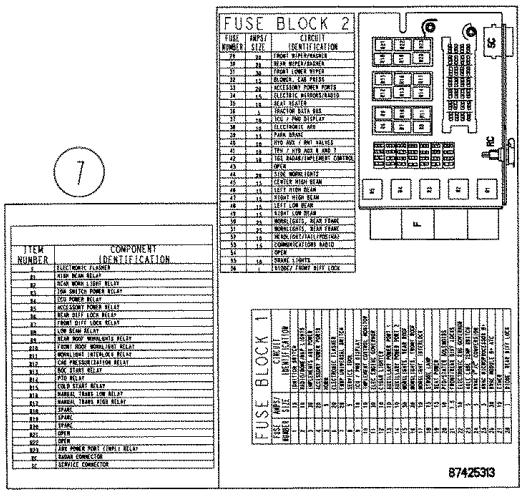

ITEM NUMBER	COMPONENT IDENTIFICATION
1	ELECTRONIC FLASHER
R1	HIGH BEAM RELAY
R2	REAR WORK LIGHT RELAY
R3	IGN SWITCH POWER RELAY
R4	ECU POWER RELAY
R5	ACCESSORY POWER RELAY
R6	REAR DIFF LOCK RELAY
R7	FRONT DIFF LOCK RELAY
R8	LOW BEAM RELAY
R9	REAR ROOF WORKLIGHTS RELAY
R10	FRONT ROOF WORKLIGHT RELAY
R11	WORKLIGHT INTERLOCK RELAY
R12	CAB PRESSURIZATION RELAY
R13	TDC START RELAY
R14	PTO RELAY
R15	COLD START RELAY
R16	MANUAL TRANS LOW RELAY
R17	MANUAL TRANS HIGH RELAY
R18	SPARE
R19	SPARE
R20	SPARE
R21	OPEN
R22	OPEN
R23	AIR POWER PORT (OPEN) RELAY
DC	RADAR CONNECTOR
SC	SERVICE CONNECTOR

8

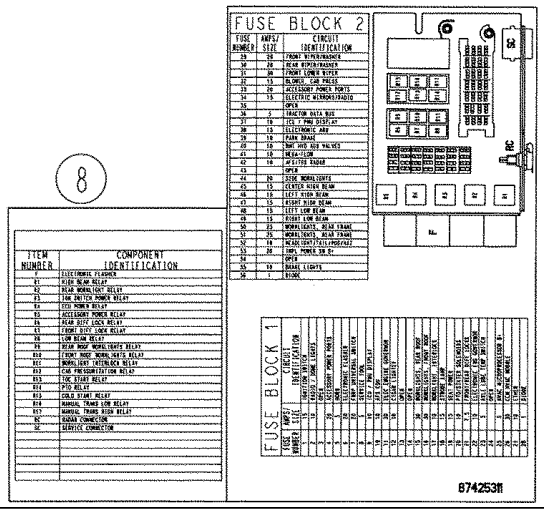

ITEM NUMBER	COMPONENT IDENTIFICATION
1	ELECTRONIC FLASHER
R1	HIGH BEAM RELAY
R2	REAR WORKLIGHT RELAY
R3	IGN SWITCH POWER RELAY
R4	ECU POWER RELAY
R5	ACCESSORY POWER RELAY
R6	REAR DIFF LOCK RELAY
R7	FRONT DIFF LOCK RELAY
R8	LOW BEAM RELAY
R9	REAR ROOF WORKLIGHTS RELAY
R10	FRONT ROOF WORKLIGHTS RELAY
R11	WORKLIGHT INTERLOCK RELAY
R12	CAB PRESSURIZATION RELAY
R13	TDC START RELAY
R14	PTO RELAY
R15	COLD START RELAY
R16	MANUAL TRANS LOW RELAY
R17	MANUAL TRANS HIGH RELAY
DC	RADAR CONNECTOR
SC	SERVICE CONNECTOR

10

11

TJ375 TRACTOR - Chassis/Attachments

09 -58 DECALS

ссылка	Номер детали	Кол-во	Описание
1	325926A2	1	DECAL, Safety Warning
2	341953A2	2	DECAL, Articulation Warning
3	435668A1	1	DECAL, Fuel
4	327567A3	1	DECAL, Power Takeoff, Warning
5	D55216	4	PAD, Protection, 228 mm (9 in), Anti-Skid
6	87425318	1	DECAL, Fuse, Power Shift Transmission, Deluxe Cab
7	87425313	1	DECAL, Fuse, Deluxe Cab, Manual Shift Transmission
8	87425311	1	DECAL, Fuse, Manual Shift Transmission, Standard Cab
9	387030A1	1	DECAL, Main Electronics
10	404992A1	1	DECAL, New Holland
11	9847773	2	NUT, Flg, M5 x .8

09 -59 DECALS

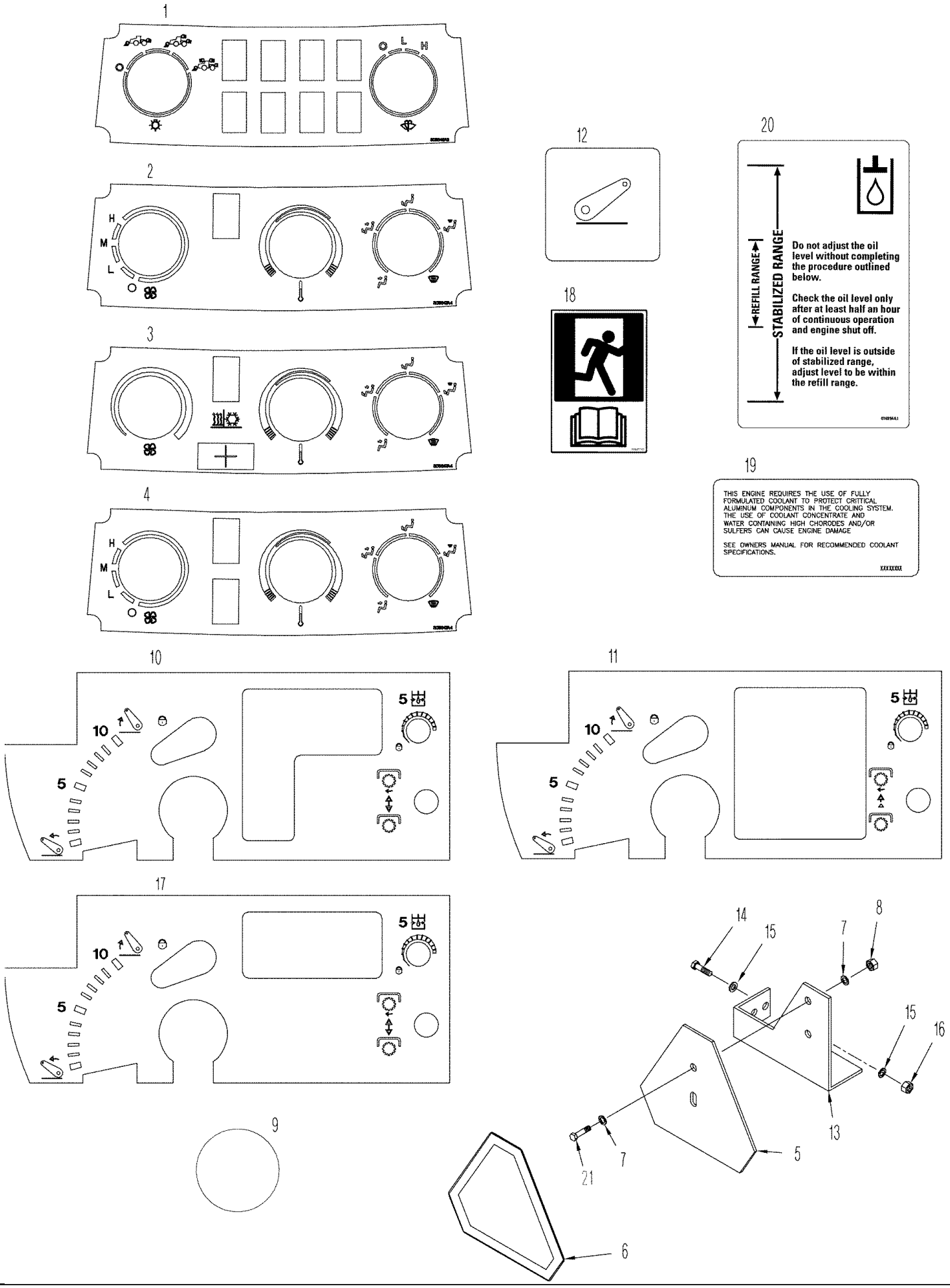
1
L
H
2
H
M
L
3
4
H
M
L
12
18
20
REFILL RANGE
STABILIZED RANGE
Do not adjust the oil level without completing the procedure outlined below.
Check the oil level only after at least half an hour of continuous operation and engine shut off.
If the oil level is outside of stabilized range, adjust level to be within the refill range.
19
THIS ENGINE REQUIRES THE USE OF FULLY FORMULATED COOLANT TO PROTECT CRITICAL ALUMINUM COMPONENTS IN THE COOLING SYSTEM. THE USE OF COOLANT CONCENTRATE AND WATER CONTAINING HIGH CHORODES AND/OR SULFERS CAN CAUSE ENGINE DAMAGE
SEE OWNERS MANUAL FOR RECOMMENDED COOLANT SPECIFICATIONS.
XXXXXXX
10
5
10
5
11
5
10
5
17
5
10
5
9
14
15
7
8
15
16
13
5
21
7
6

TJ375 TRACTOR - Chassis/Attachments

09 -59 DECALS

ссылка	Номер детали	Кол-во	Описание
1	431230A1	1	DECAL, Light Panel
2	308646A4	1	DECAL, Climate Control, Standard Cab, Without Automatic Temperature Control, BSN RVS003801
2	87450973	1	DECAL, Climate Control, Without Automatic Temperature Control, Standard Cab, ASN RVS003801
3	308647A4	1	DECAL, Climate Control, With Automatic Temperature Control, Deluxe Cab, BSN RVS003801
4	87450974	1	DECAL, Climate Control, Deluxe Cab, With Automatic Temperature Control, ASN RVS003801
	311860A1	1	EMBLEM, Slow Moving Vehicle, Inc. 4, 5
5	NSS	1	NOT SERVICED SEPARATELY, Plate
6	311858A1	1	DECAL,
7	87361	2	WASHER, 1/4", SAE,
8	7770	2	NUT, 1/4"-20, G5,
9	446561A1	1	DECAL, Insert, Without Power Takeoff, BSN RVS001801
9	87403322	1	DECAL, Insert, Without Power Takeoff, ASN RVS001801
10	394992A1	1	DECAL, Arm Rest, RH, With Three Point Hitch, BSN RVS001801
10	87403326	1	DECAL, Arm Rest, RH, With Three Point Hitch, BTW RVS001801 & RVS003801
11	87413052	1	DECAL, Right-Hand Armrest, ASN RVS003801
12	393821A1	1	DECAL, Three Point Hitch
13	431187A1	1	BRACKET,
14	43248	2	BOLT, Hex, M10 x 40, 10.9, Full Thd,
15	86624176	4	WASHER, M10 x 20 x 2, M10
16	86514720	2	NUT, LOCK, M10 x 1.5
17	394993A1	1	DECAL, Arm Rest, RH, Without Three Point Hitch, BSN RVS001801
17	87403327	1	DECAL, Arm Rest, RH, Without Three Point Hitch, BTW RVS001801 & RVS003801
18	329051A1	1	DECAL, Emergency Exit
19	399083A1	1	DECAL, Coolant
20	434856A1	1	DECAL, Hydraulic Oil Level
21	281032	2	BOLT, Hex, 1/4"-20 x 3/4", G8, Full Thd, 1/4 x 3/4; 8

1

MPH LOW	MPH HIGH	GEAR	RANGE
2.5	2.6	1	A
3.3	3.6	2	A
4.1	4.4	1	B
4.6	4.9	3	A
5.6	6.0	2	B
6.5	7.0	1	C
7.6	8.2	3	B
8.8	9.5	2	C
10.3	11.0	1	D
12.1	13.0	3	C
13.9	14.9	2	D
19.0	20.4	3	D
3.5	3.8	R	A
5.9	6.3	R	B
9.3	10.0	R	C

2

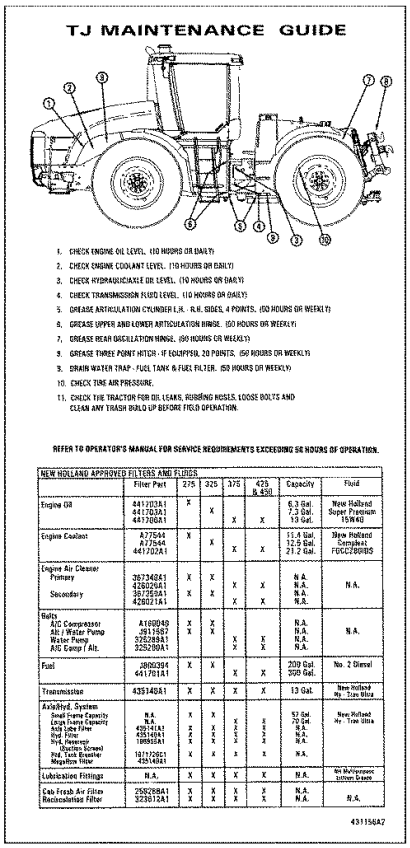
TJ MAINTENANCE GUIDE
1. CHECK ENGINE OIL LEVEL. (10 HOURS OR DAILY)
2. CHECK ENGINE COOLANT LEVEL. (10 HOURS OR DAILY)
3. CHECK HYDRAULIC/AXLE OIL LEVEL. (10 HOURS OR DAILY)
4. CHECK TRANSMISSION FLUID LEVEL. (10 HOURS OR DAILY)
5. GREASE ARTICULATION CYLINDER L.H. - R.H. SIDES, 4 POINTS. (50 HOURS OR WEEKLY)
6. GREASE UPPER AND LOWER ARTICULATION HINGE. (50 HOURS OR WEEKLY)
7. GREASE REAR OSCILLATION HINGE. (50 HOURS OR WEEKLY)
8. GREASE THREE POINT HITCH - IF EQUIPPED, 20 POINTS. (50 HOURS OR WEEKLY)
9. DRAIN WATER TRAP - FUEL TANK & FUEL FILTER. (50 HOURS OR WEEKLY)
10. CHECK TIRE AIR PRESSURE.
11. CHECK THE TRACTOR FOR OIL LEAKS, RUBBING HOSES, LOOSE BOLTS AND CLEAN ANY TRASH BUILD UP BEFORE FIELD OPERATION.
REFER TO OPERATOR'S MANUAL FOR SERVICE REQUIREMENTS EXCEEDING 50 HOURS OF OPERATION.
NEW HOLLAND APPROVED FILTERS AND FLUIDS
Filter Part | 275 | 325 | 375 | 425 & 520 | Capacity | Fluid
Engine Oil | 84120A1 84170A1 84170BA1 | X | X | X | X | 6.3 Gal. 7.3 Gal. 10 Gal. | New Holland Super Premium 15W40
Engine Coolant | A77544 A77544 84170ZA1 | X | X | X | X | 11.4 Gal. 12.9 Gal. 21.2 Gal. | New Holland Compleat FDCC7B0BDS
Engine Air Cleaner Primary Secondary | 36734BA1 42802BA1 36735BA1 42802BA1 | X X | X X | X X | X X | N.A. N.A. N.A. N.A. | N.A.
Belts A/C Compressor Alt / Water Pump Water Pump A/C Comp / Alt. | A160040 J911587 325288A1 325289A1 | X X | X X | X X | X X | N.A. N.A. N.A. N.A. | N.A.
Fuel | J800394 84175TA1 | X | X | X | X | 200 Gal. 300 Gal. | No. 2 Diesel
Transmission | 43514BA1 | X | X | X | X | 13 Gal. | New Holland Hy - Tran Ultra
Axle/Hyd. System Small Frame Capacity Large Frame Capacity Axle Lube Filter Hyd. Filter Hyd. Reservoir (Suction Screen) Rear Tank Breather Magnifine Filter | N.A. N.A. 43514BA1 43514BA1 A 1 A 1 A 1 A 1 10117C001 43514BA1 | X X X

TJ375 TRACTOR - Chassis/Attachments

09 -60 DECALS

ссылка	Номер детали	Кол-во	Описание
1	411564A1	1	DECAL, Range / Gear Shift, 24 Speed
2	431156A2	1	DECAL, Maintenance
3	410704A1	1	DECAL, Instruction Seat
4	87427097	1	DECAL, DANGER, Battery, ASN RVS002701
5	87423866	1	DECAL, Remote Hitch Safety
6	82029421	1	DECAL, WARNING, Radiator Pressure
7	87427096	1	DECAL, Pos. (+) Post, ASN RVS002701
8	87427317	1	DECAL, Neg. (-) Post, ASN RVS002701
9	389794A1	1	DECAL, Hydraulic Coupler, Black
9	432771A1	1	DECAL, Hydraulic Coupler, Green
9	432772A1	1	DECAL, Hydraulic Coupler, Blue
9	432773A1	1	DECAL, Hydraulic Coupler, Ginger
9	440438A1	1	DECAL, Hydraulic Coupler, Grey
10	418215A1	1	DECAL, Ignition Switch
11	A187743	1	DECAL, WARNING, Ground Speed Radar

09 -61 FIRE EXTINGUISHER

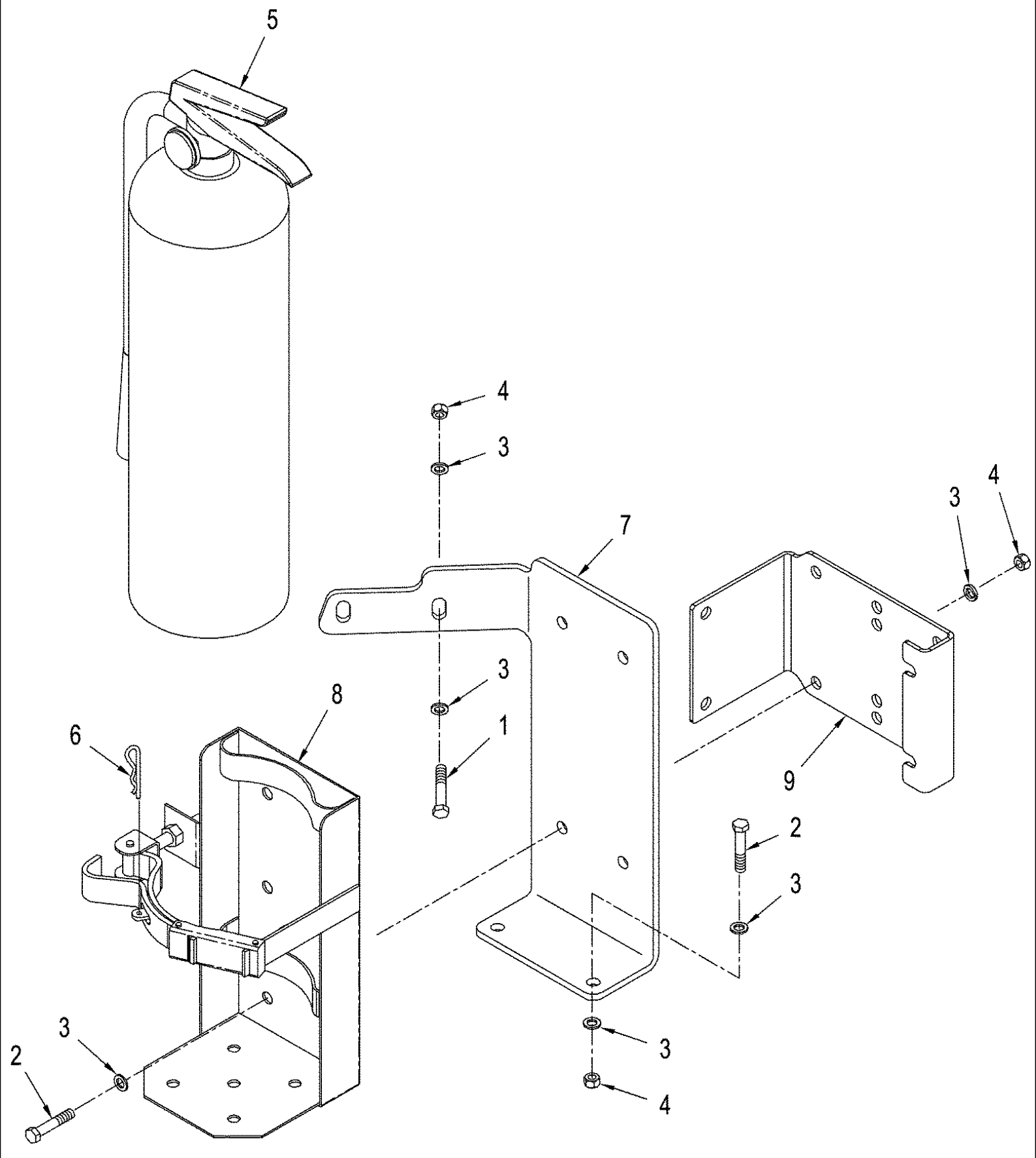

09 -61 FIRE EXTINGUISHER

ссылка	Номер детали	Кол-во	Описание
	719972003	1	DIA KIT, TRACTOR, Fire Extinguisher, Inc. 1 - 9
1	43248	2	BOLT, Hex, M10 x 40, 10.9, Full Thd,
2	9515003	6	BOLT, Hex, M10 x 30, 10.9, Full Thd,
3	86625253	14	WASHER, M11 x 24 x 2, 11 x 24 x 2mm
4	412141	8	NUT, LOCK, M10 x 1.5, Cl 8,
5	NSS	1	NOT SERVICED SEPARATELY, Extinguisher, Fire, 10 lb., ABC
6	1980543C1	1	SPLIT PIN/SAFETY PIN,
7	87417139	1	BRACKET, SUPPORTING, Left-Hand Stair Mount, If Used
8	87427312	1	BRACKET, SUPPORTING, Fender Mount, If Used
9	87420884	1	BRACKET, SUPPORTING, Toolbox Mount, If Used