MAIN SECTIONS	**SECTIONS PRINCIPALES**	**SECCIONES PRINCIPALES**	**HOVEDAFSNIT**
SEZIONI PRINCIPALI	**HAUPTABSCHNITTE**	**SECÇÕES PRINCIPAIS**	**HOOFDSECTIES**

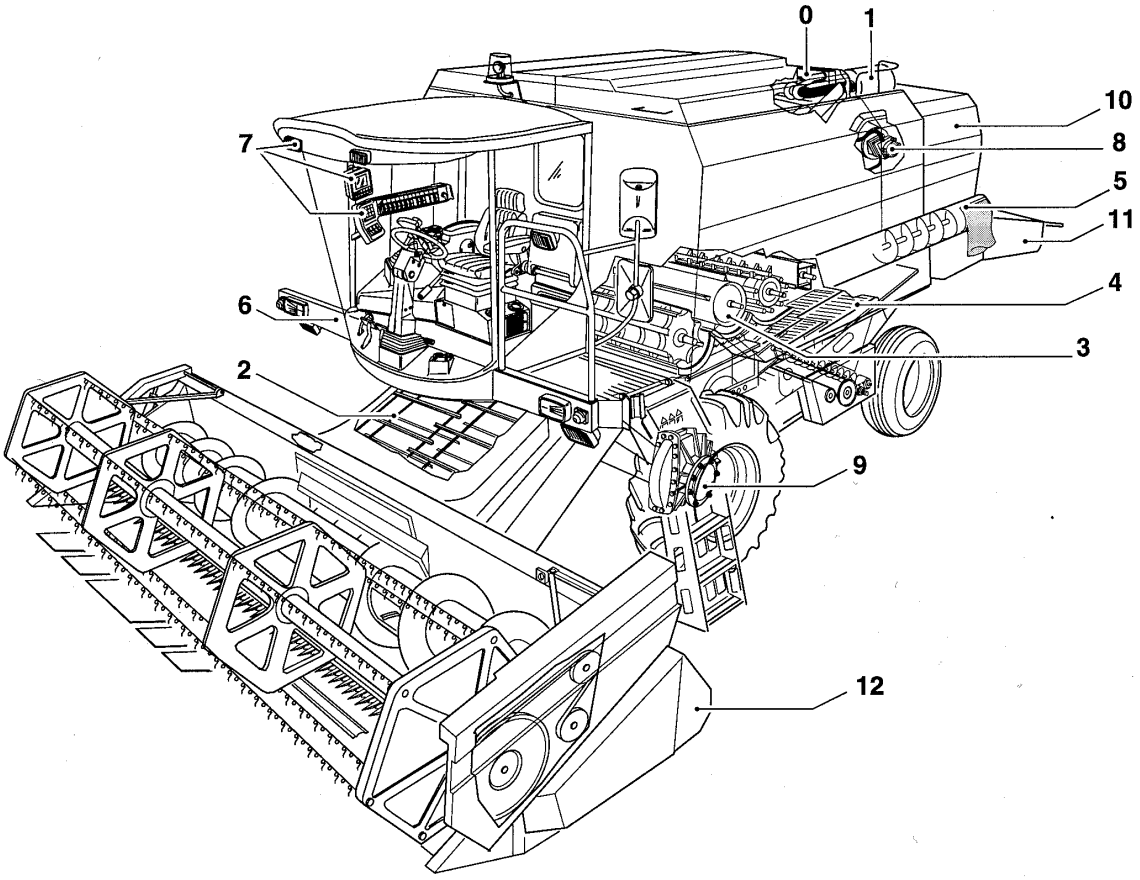

TX68 COMBINE - BASE UNIT

0.0016(01) MAIN SECTIONS

ссылка	Номер детали	Кол-во	Описание

SECTIONS	**SECTIONS**	**SECCIONES**	**AFSNIT**
SEZIONI	**ABSCHNITTE**	**SECÇÕES**	**SECTIES**

SEC. 1

TX 68

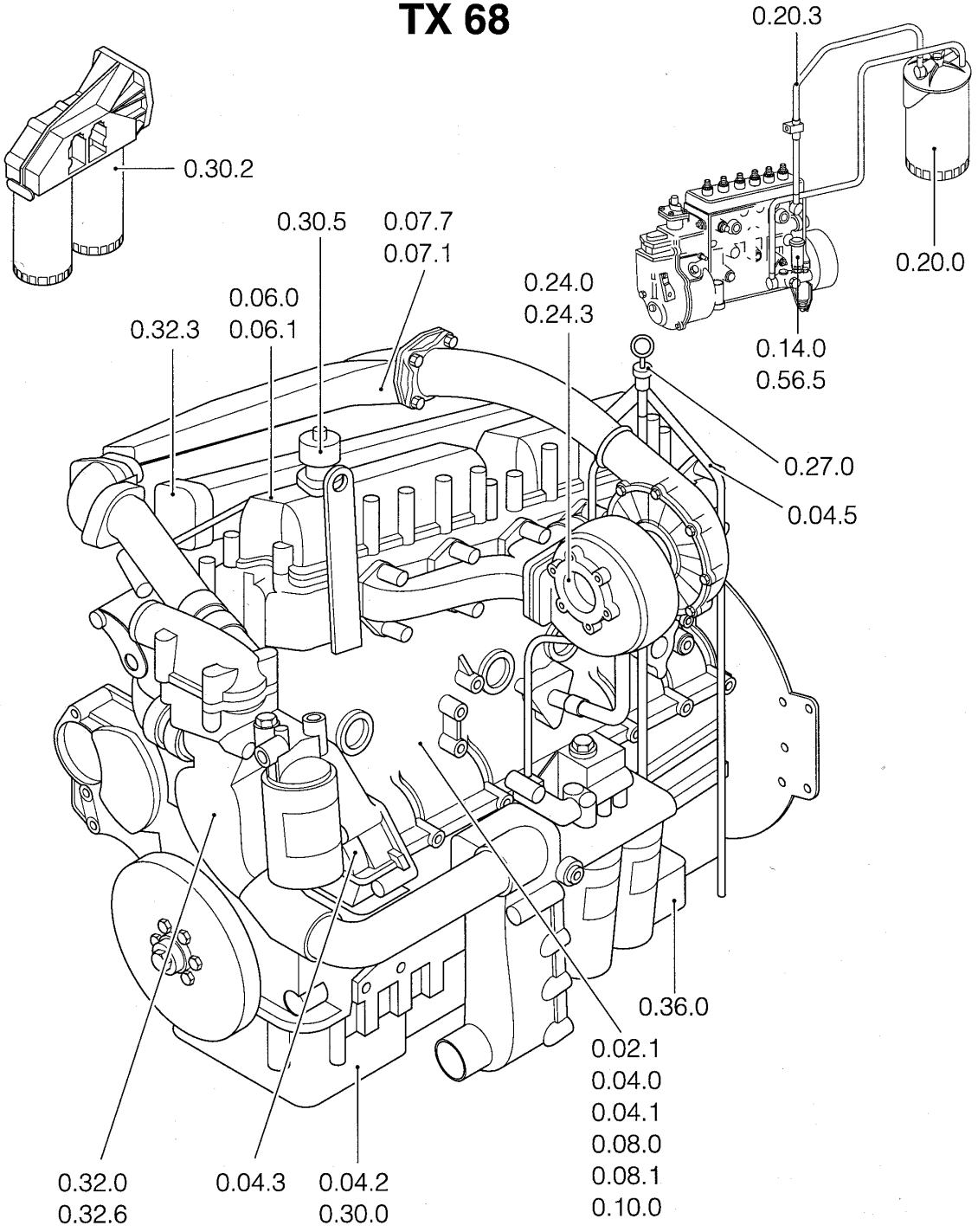

TX68 COMBINE - BASE UNIT

0.0017(01) SECTION LIST 1 - TX68

ссылка	Номер детали	Кол-во	Описание

SECTIONS	**SECTIONS**	**SECCIONES**	**AFSNIT**
SEZIONI	**ABSCHNITTE**	**SECÇÕES**	**SECTIES**

SEC. 1

TX 68

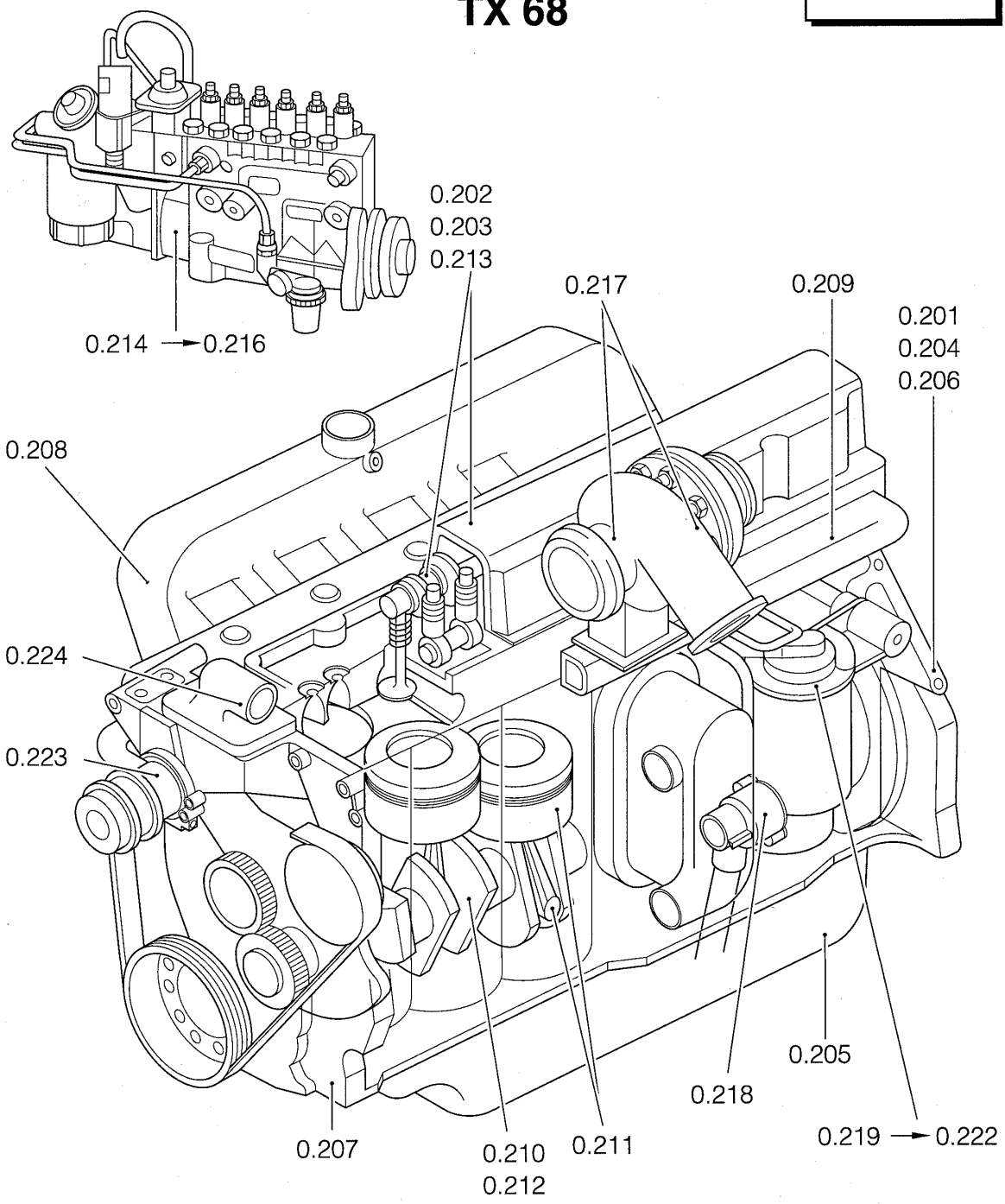

ссылка	Номер детали	Кол-во	Описание

SECTIONS	**SECTIONS**	**SECCIONES**	**AFSNIT**
SEZIONI	**ABSCHNITTE**	**SECÇÕES**	**SECTIES**

SEC. 1

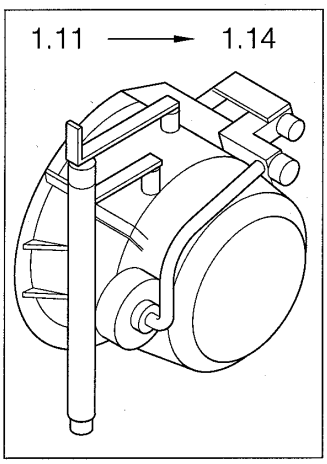

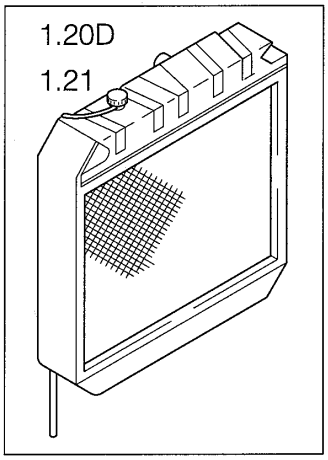

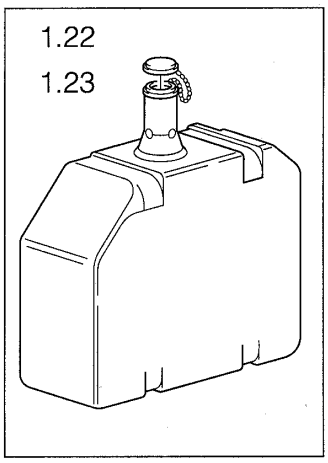

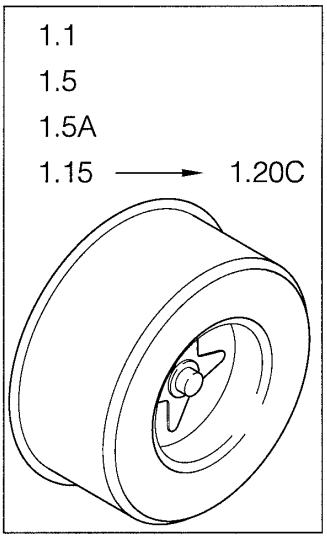

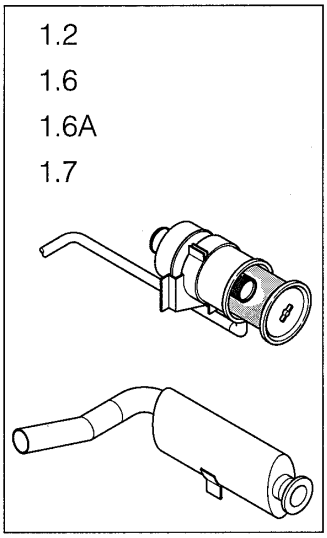

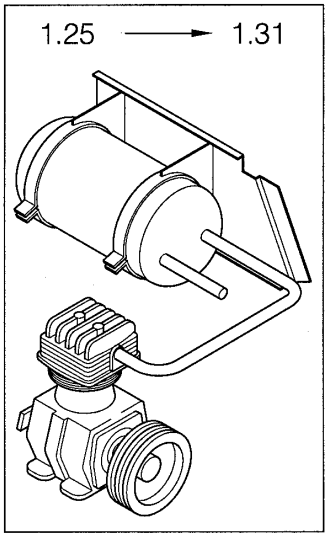

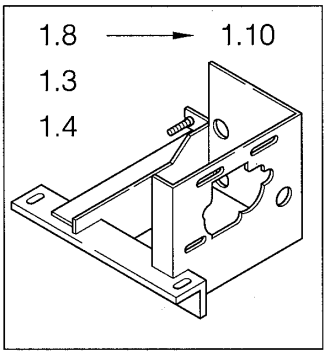

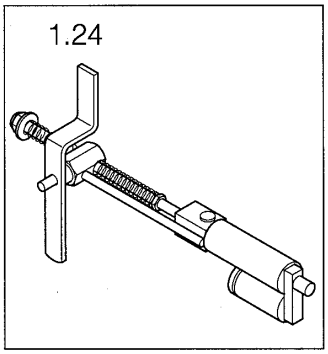

TX68 COMBINE - BASE UNIT

0.0017C(01) SECTION LIST 1

ссылка	Номер детали	Кол-во	Описание

SECTIONS	**SECTIONS**	**SECCIONES**	**AFSNIT**
SEZIONI	**ABSCHNITTE**	**SECÇÕES**	**SECTIES**

SEC. 2

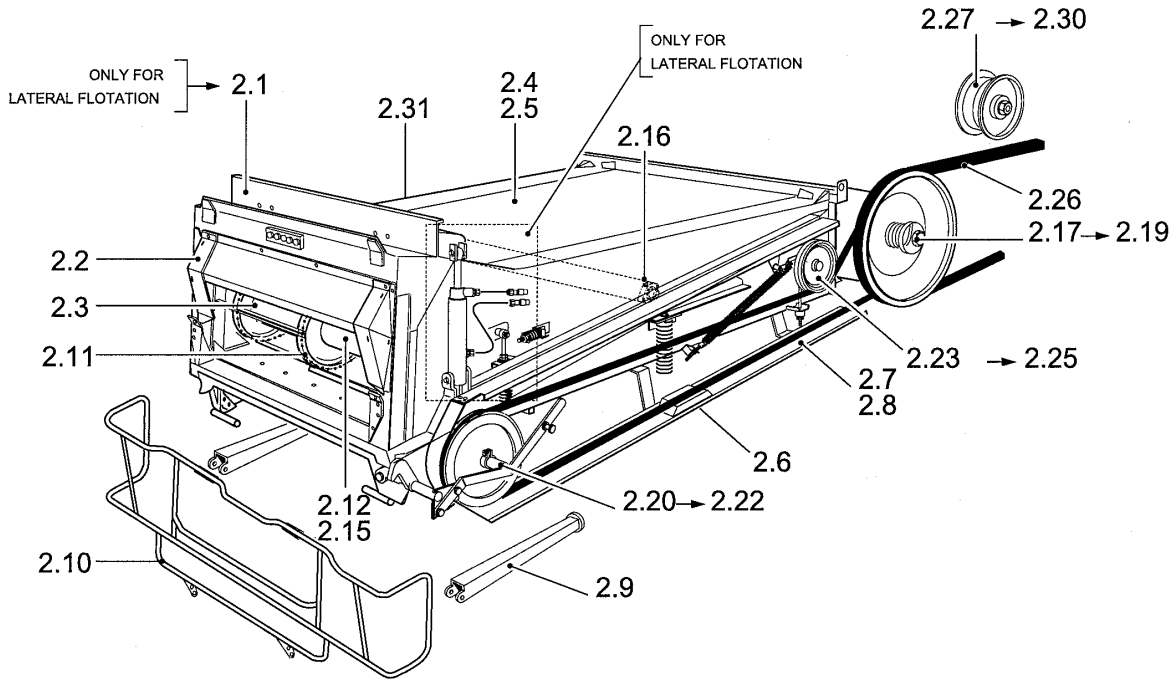

TX68 COMBINE - BASE UNIT

0.0018(01) SECTION LIST 2

ссылка	Номер детали	Кол-во	Описание

SECTIONS	**SECTIONS**	**SECCIONES**	**AFSNIT**
SEZIONI	**ABSCHNITTE**	**SECÇÕES**	**SECTIES**

SEC. 3

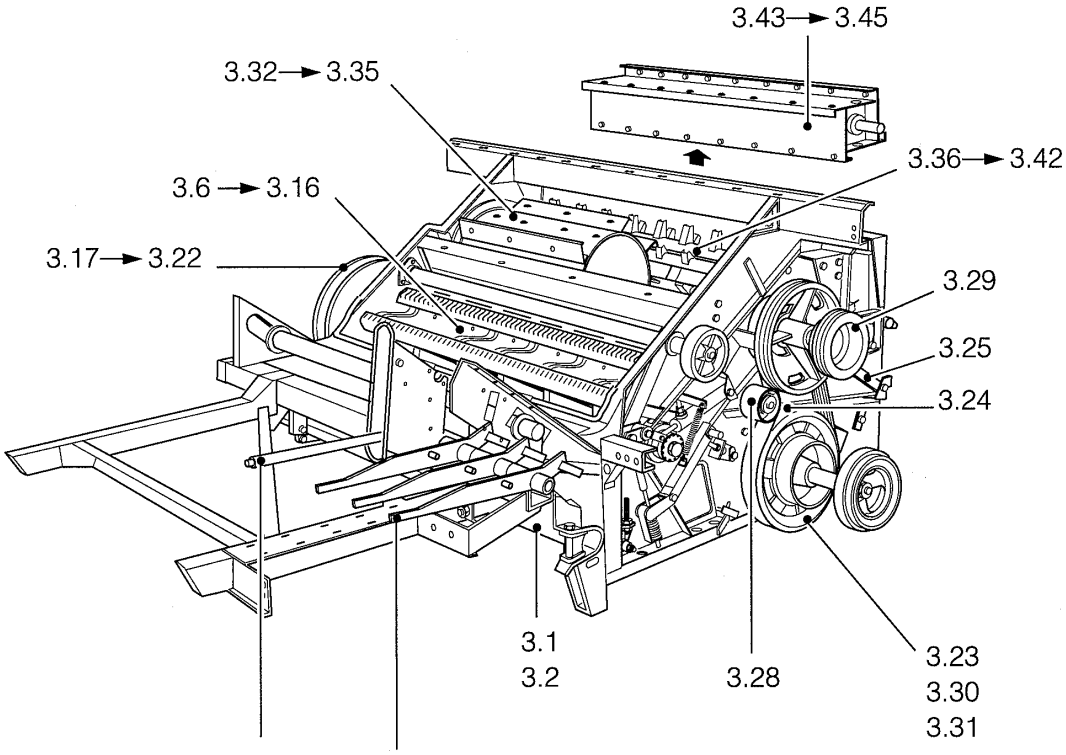

(TX62-63) 3.3
(TX64-65-66-67-68) 3.4
(TX64-65-66-67-68) 3.5

3.25 (TX64-65-66-67-68)
3.26 (TX62-63)
3.27

TX68 COMBINE - BASE UNIT

0.0019(01) SECTION LIST 3

ссылка	Номер детали	Кол-во	Описание

SECTIONS	**SECTIONS**	**SECCIONES**	**AFSNIT**
SEZIONI	**ABSCHNITTE**	**SECÇÕES**	**SECTIES**

SEC. 4

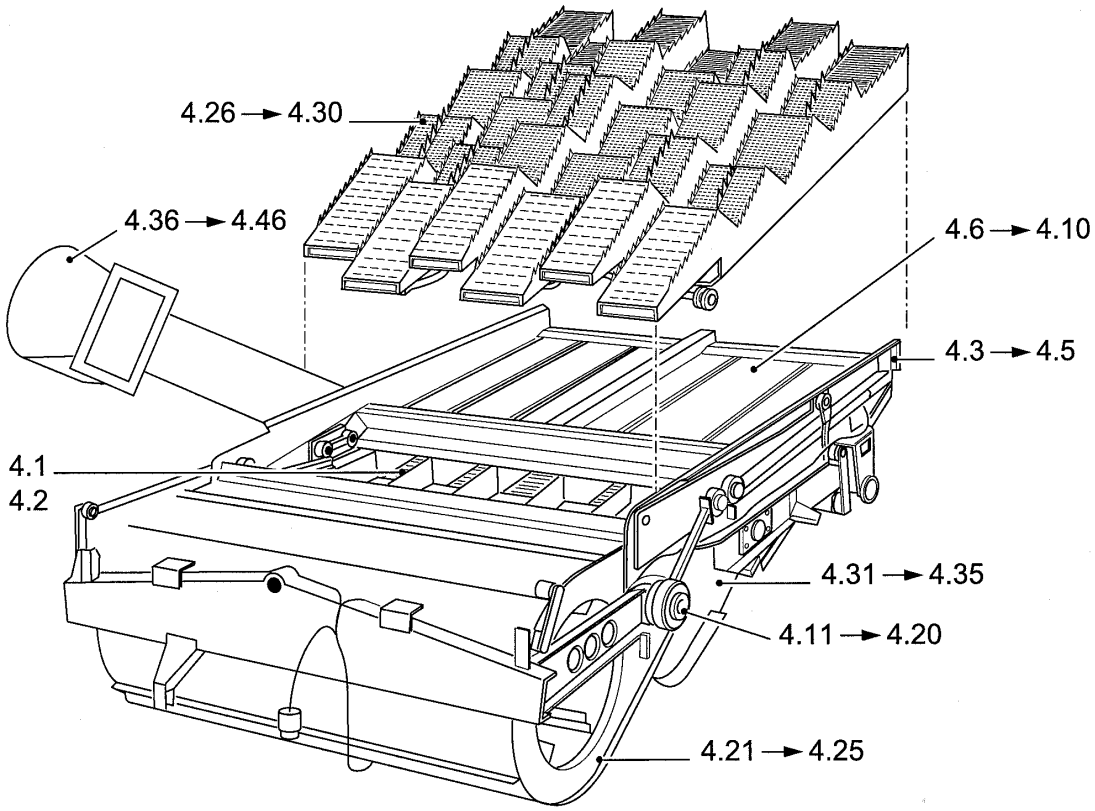

ссылка	Номер детали	Кол-во	Описание

SECTIONS	**SECTIONS**	**SECCIONES**	**AFSNIT**
SEZIONI	**ABSCHNITTE**	**SECÇÕES**	**SECTIES**

SEC. 5

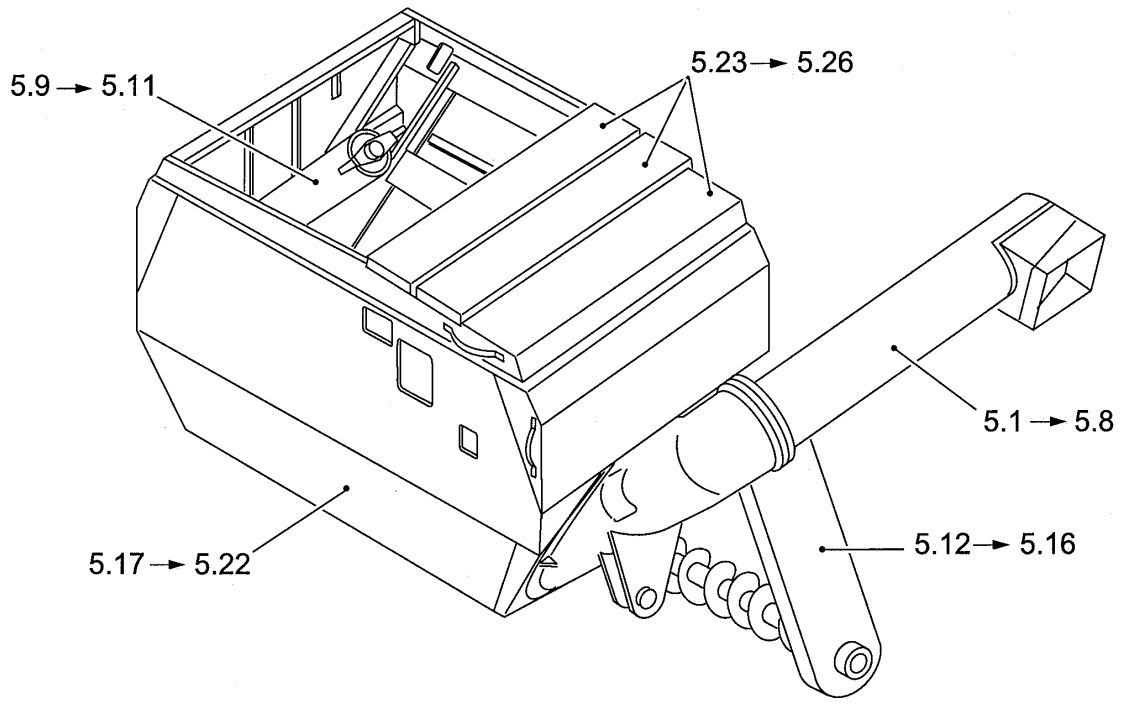

ссылка	Номер детали	Кол-во	Описание

SECTIONS	**SECTIONS**	**SECCIONES**	**AFSNIT**
SEZIONI	**ABSCHNITTE**	**SECÇÕES**	**SECTIES**

SEC. 6

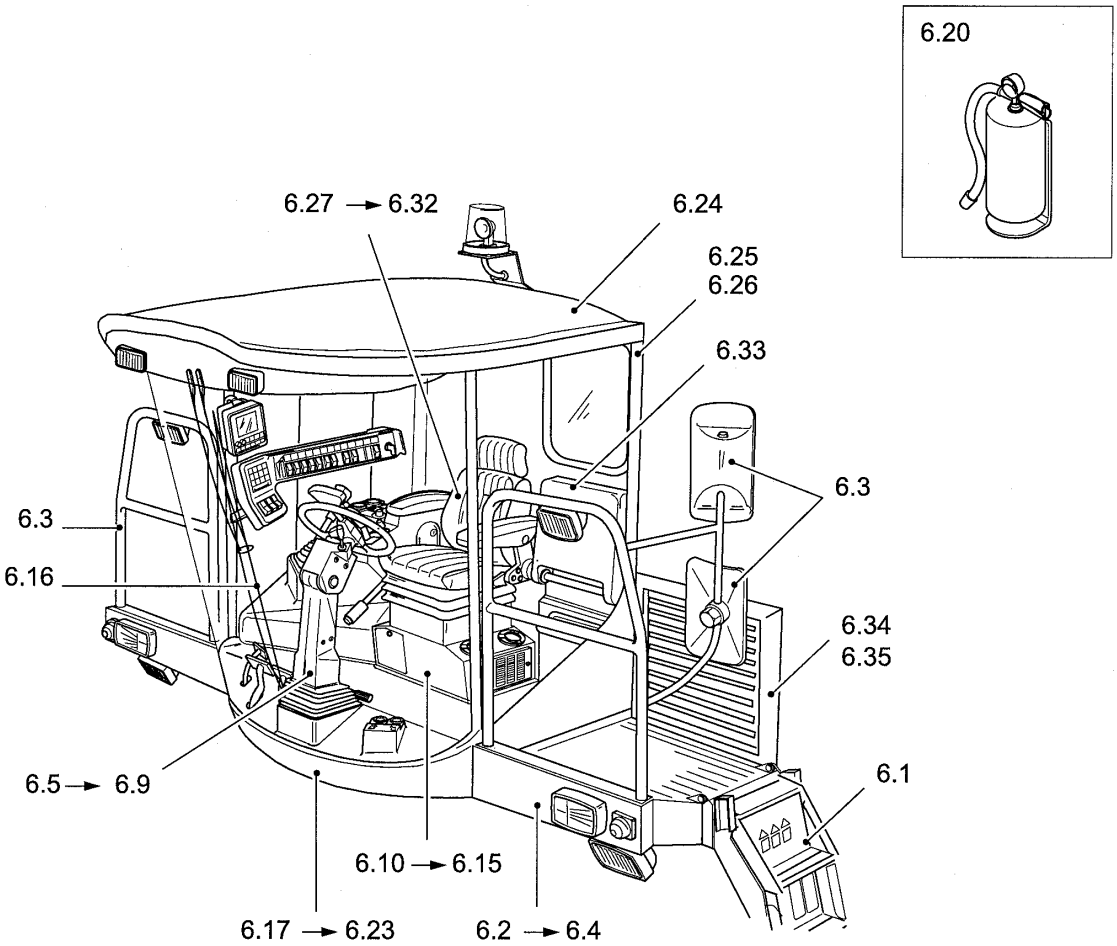

ссылка	Номер детали	Кол-во	Описание

SECTIONS	**SECTIONS**	**SECCIONES**	**AFSNIT**
SEZIONI	**ABSCHNITTE**	**SECÇÕES**	**SECTIES**

SEC. 7

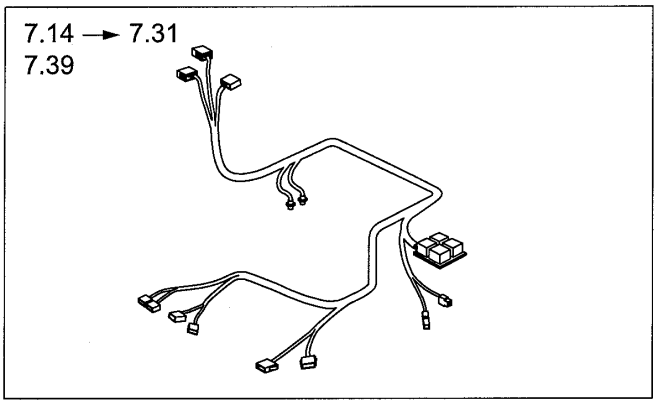

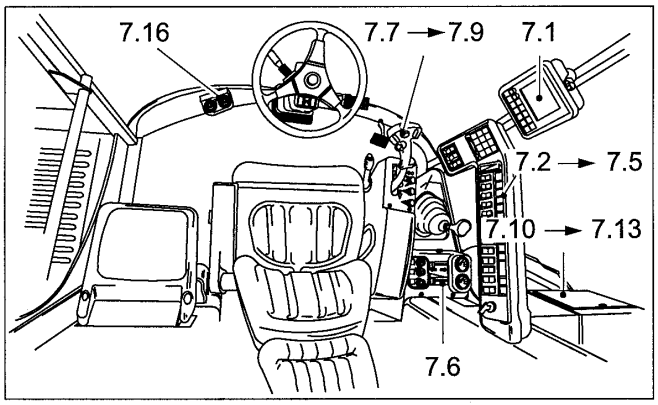

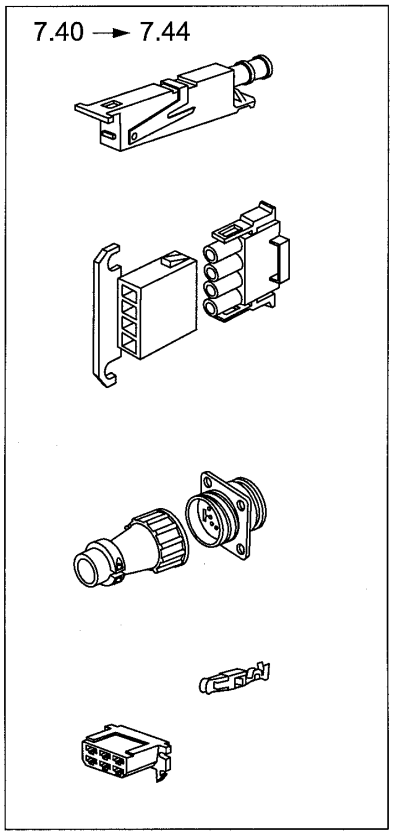

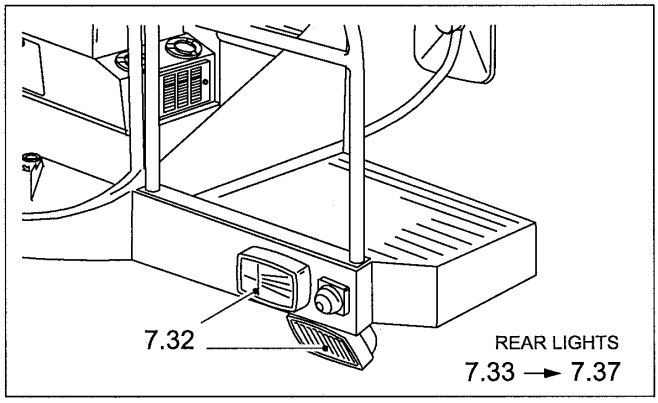

ссылка	Номер детали	Кол-во	Описание

SECTIONS	**SECTIONS**	**SECCIONES**	**AFSNIT**
SEZIONI	**ABSCHNITTE**	**SECÇÕES**	**SECTIES**

SEC. 8

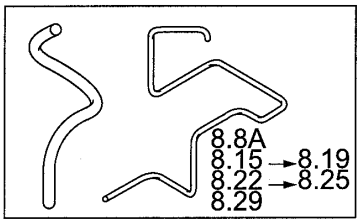

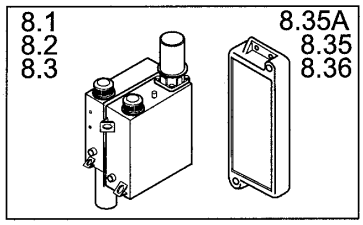

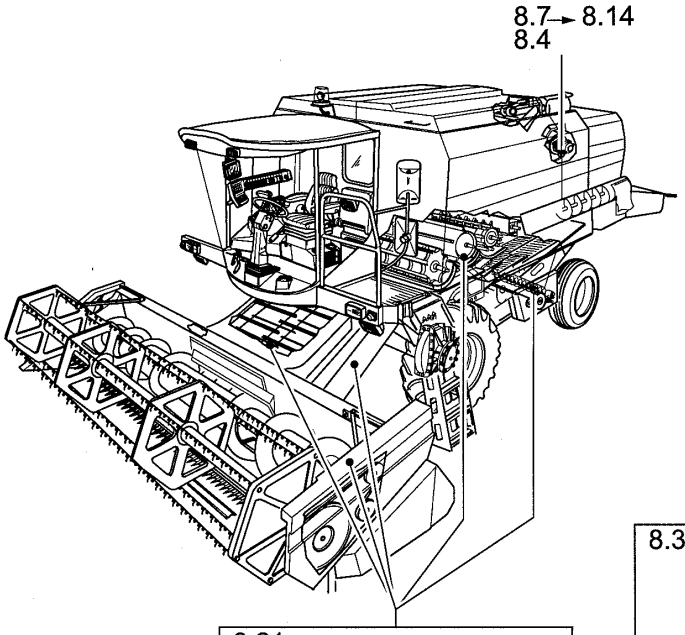

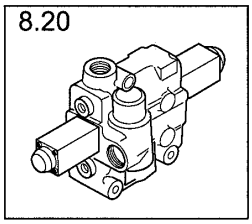

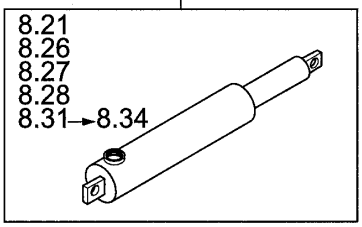

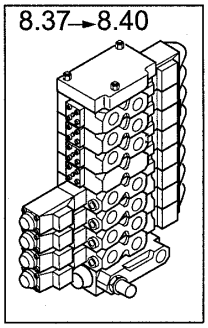

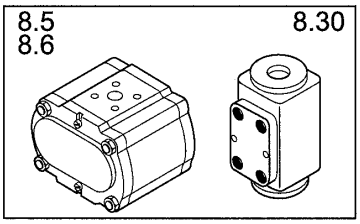

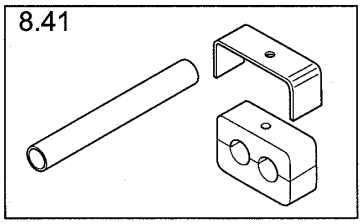

ссылка	Номер детали	Кол-во	Описание

SECTIONS	**SECTIONS**	**SECCIONES**	**AFSNIT**
SEZIONI	**ABSCHNITTE**	**SECÇÕES**	**SECTIES**

SEC. 9

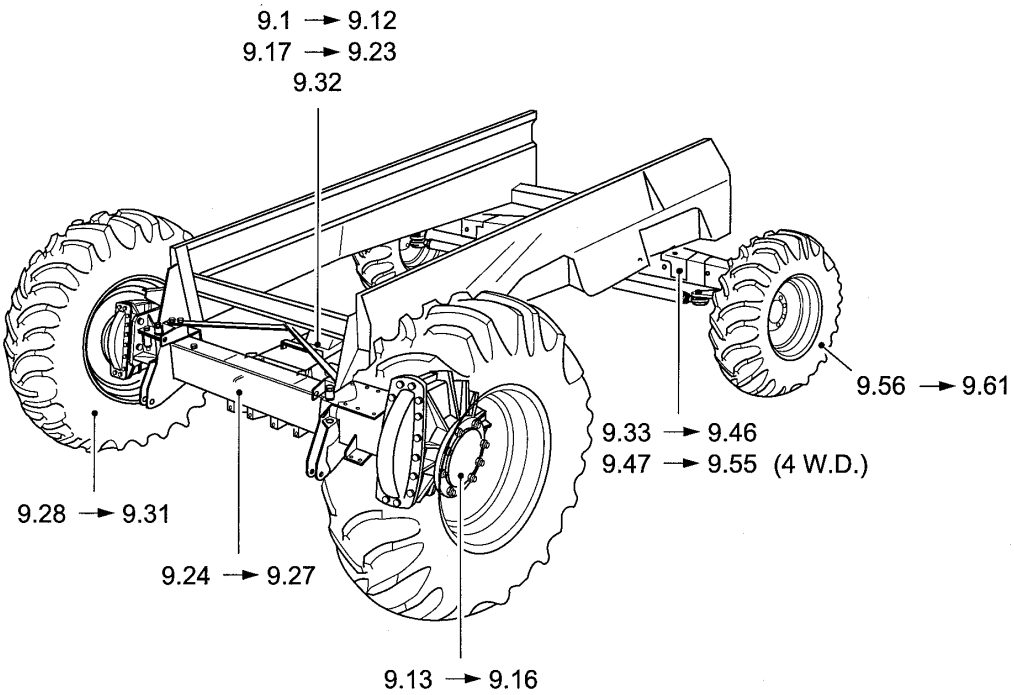

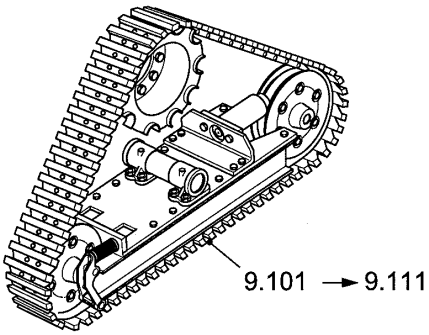

TX68 COMBINE - BASE UNIT

0.0025(01) SECTION LIST 9

ссылка	Номер детали	Кол-во	Описание

SECTIONS	**SECTIONS**	**SECCIONES**	**AFSNIT**
SEZIONI	**ABSCHNITTE**	**SECÇÕES**	**SECTIES**

SEC. 10

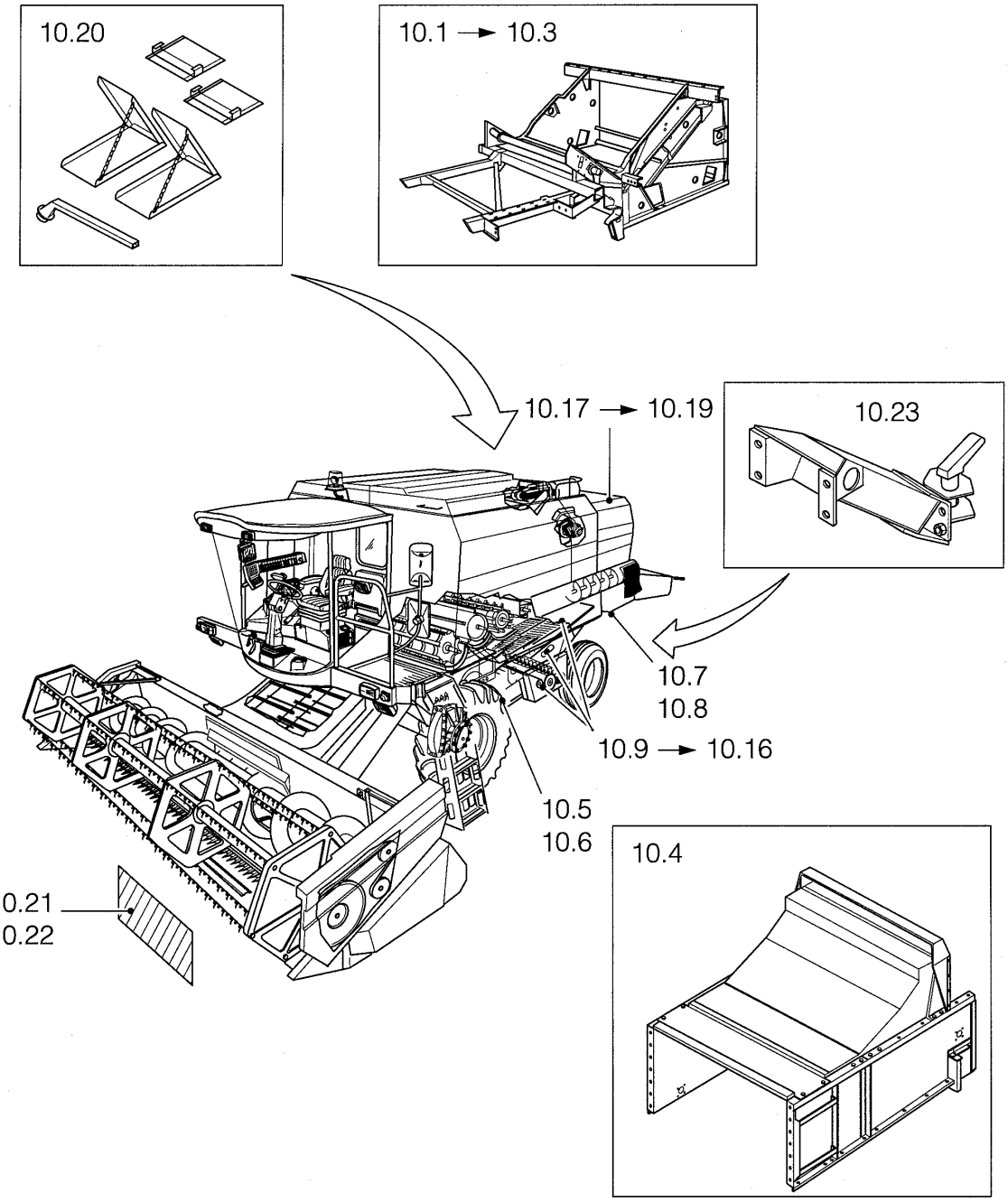

ссылка	Номер детали	Кол-во	Описание

SECTIONS	**SECTIONS**	**SECCIONES**	**AFSNIT**
SEZIONI	**ABSCHNITTE**	**SECÇÕES**	**SECTIES**

SEC. 11

11.1 → 11.6
Drive and shields

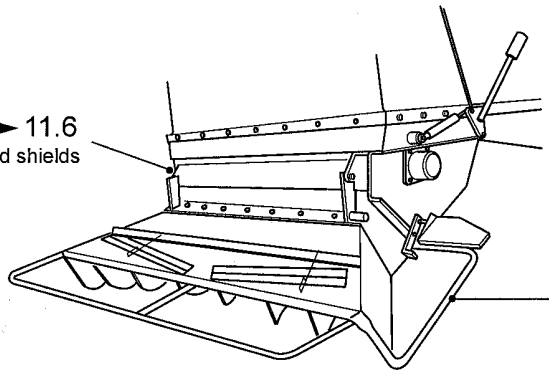

11.21 → 11.29

TX68 Until Serial No. 5109999
TX66 Until Serial No. 5009999

11.41 → 11.55

TX68 From Serial No. 5110001 Until 5125999
TX68 From Serial No. 511035001
TX67 From Serial No. 441035001
TX66 From Serial No. 5010001 Until 5015999
TX66 From Serial No. 501035001
TX65 From Serial No. 6601001
TX64 From Serial No. 4901001
TX63 From Serial No. 461033001
TX62 From Serial No. 4801001

11.61 → 11.69

TX68 From Serial No. 5126001 Until 511034999
TX67 From Serial No. 4404001 Until 441034999
TX66 From Serial No. 5016001 Until 501034999

11.201 → 11.218

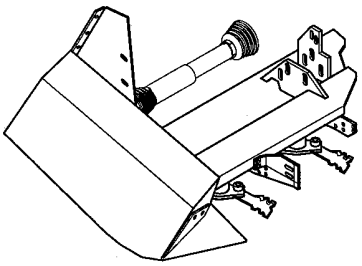

11.101 → 11.108
Until Serial No. _ _ 1032999

11.111 → 11.114
From Serial No. _ _ 1033001

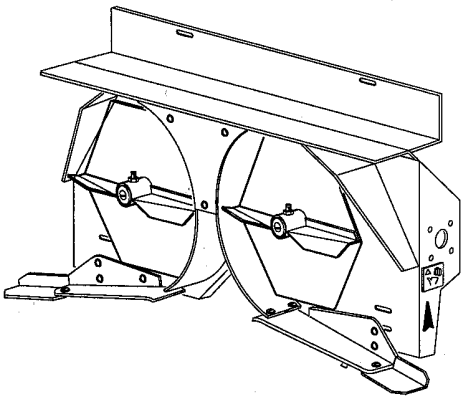

ссылка	Номер детали	Кол-во	Описание

SECTIONS	**SECTIONS**	**SECCIONES**	**AFSNIT**
SEZIONI	**ABSCHNITTE**	**SECÇÕES**	**SECTIES**

SEC. 12

ZAFHEAD
SEE CATALOGUE 603.27.012.00

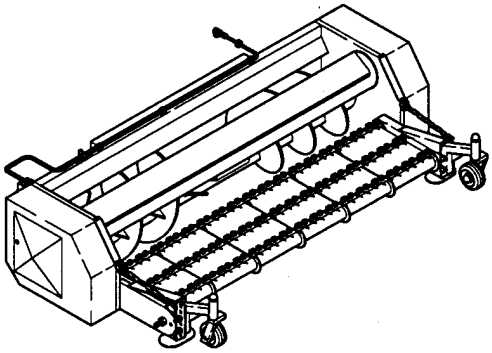

CORNH
SEE CATALOGUE 603.27.009.00

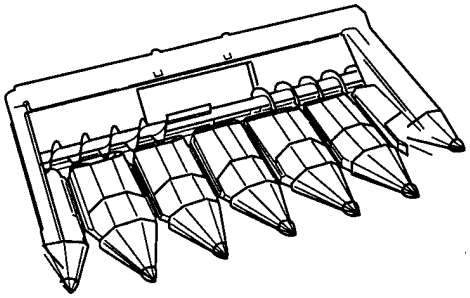

FALIHD
SEE CATALOGUE 603.27.008.00

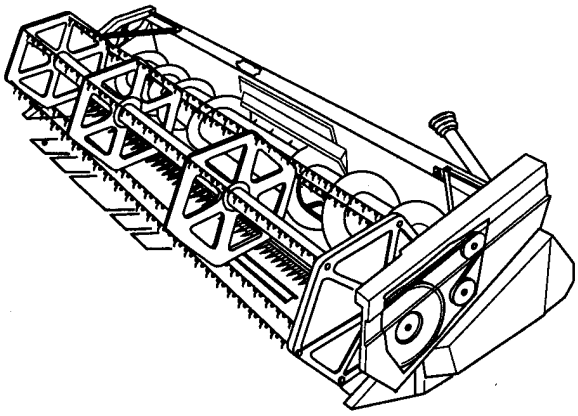

CORNHEADER
SEE CATALOGUE 603.27.007.00

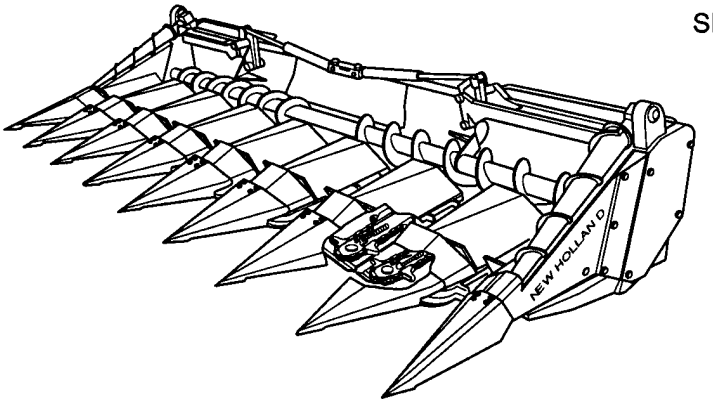

HIGH CAPACITY GRAIN HEADER
SEE CATALOGUE 603.27.017.00

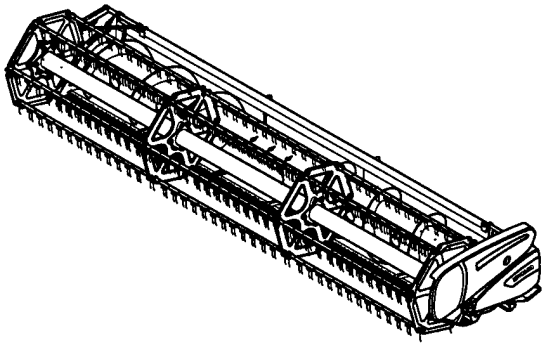

ссылка	Номер детали	Кол-во	Описание

VERSION LIST
ELENCO VERSIONI
LISTE DE VERSION
VERZEICHNIS DER VERSIONEN

LISTA DE VERSIONES
LISTA DAS VERSÕES
TYPELISTE
LIJST VAN VERSIES

Vehicle Modello Modele Modells	Modelo Modelo Model Model	Chassi Telaio Chassis Fahrgestell	Chasis Armação Stativ Raam	Engine Motore Moteur Motor	Motor Motor Motor Motor
TX62		48.04.001		FORD 675TA	
		48.1033.001		FORD 675TA/VR	
TX63		46.1033.001		FORD 675TA/VJ	
		46.1246.001		FORD 675 TA/CB	
TX64		49.04.001		FORD 675TA/1	
		49.1033.001		FORD 675TA/VK	
TX65		66.04.001		FORD 675TA/2	
		66.1033.001		FORD 675TA/VP	
		66.1246.001		FORD 675 TA/CA	
TX66		50.01.001		FORD 675TA/3	
		50.1033.001		FORD 675TA/VN	
		50.1091.001		FORD 675TA/VU	
		50.1246.001		FORD 675 TA/CA	
TX67		44.04.001		FORD 675TA/VN	
		44.1091.001		FORD 675TA/VU	
TX68		51.01.001		IVECO aifo 8460 SRi 10.00A007	
TX68 OR TX68PLUS		51.1033.001		OR IVECO aifo 8465 SRi 20.00A001	
				OR IVECO aifo 8460 SRi 21.00A003	
				OR FORD 675TA/VY	
				OR IVECO 8465.41.9870	
		51.1246.001		FORD 675 TA/AB	

TX68 COMBINE - BASE UNIT

0.0037(01) VERSION LIST

ссылка	Номер детали	Кол-во	Описание

IDENTIFICATION PLATES
TARGHETTE DI IDENTIFICAZIONE
PLAQUES D'IDENTIFICATION
TYPENSCHILDER

PLACAS DE IDENTIFICACIÓN
CHAPAS DE IDENTIFICAÇÃO
IDENTIFIKATIONSPLADER
IDENTIFICATIEPLATEN

VEHICLE IDENTIFICATION
IDENTIFICAZIONE MODELLO
IDENTIFICATION MODELE
KENNZEICHEN MODELLS
IDENTIFICACION MODELO
IDENTIFICAÇÃO DO MODELO
MODELKENDINGSPLADE
MODELIDENTIFICATIE

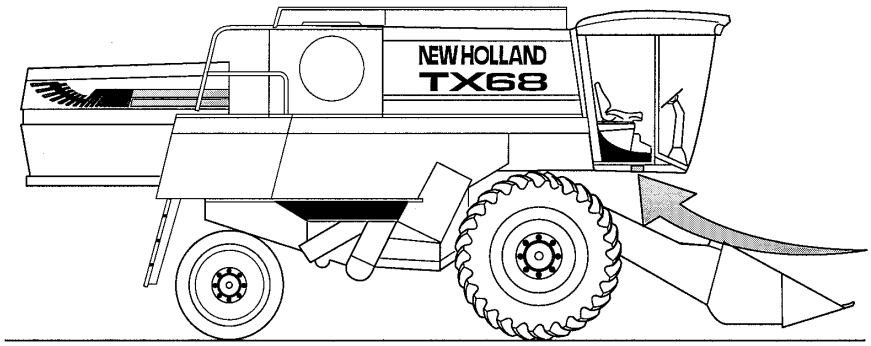

ENGINE IDENTIFICATION
IDENTIFICAZIONE MOTORE
IDENTIFICATION MOTEUR
KENNZEICHEN MOTOR
IDENTIFICACION MOTOR
IDENTIFICAÇÃO DO MOTOR
MOTORKENDINGSPLADE
MOTORIDENTIFICATIE

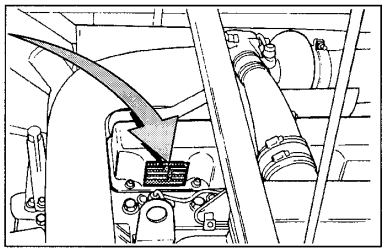

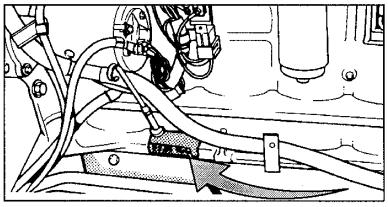

TX68 COMBINE - BASE UNIT

0.0038(01) IDENTIFICATION PLATES

ссылка	Номер детали	Кол-во	Описание

MAINTENANCE PARTS
PARTICOLARI PER LA MANUTENZIONE
PIECES DE MAINTENANCE
TEILE FÜR DIE INSTANDHALTUNG

PIEZAS DE MANTENIMIENTO
PEÇAS DE MANUTENÇÃO
VEDLIGEHOLDELSESDELE
ONDERDELEN VOOR ONDERHOUD

RH

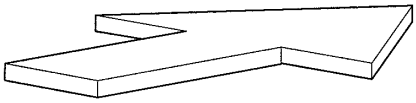

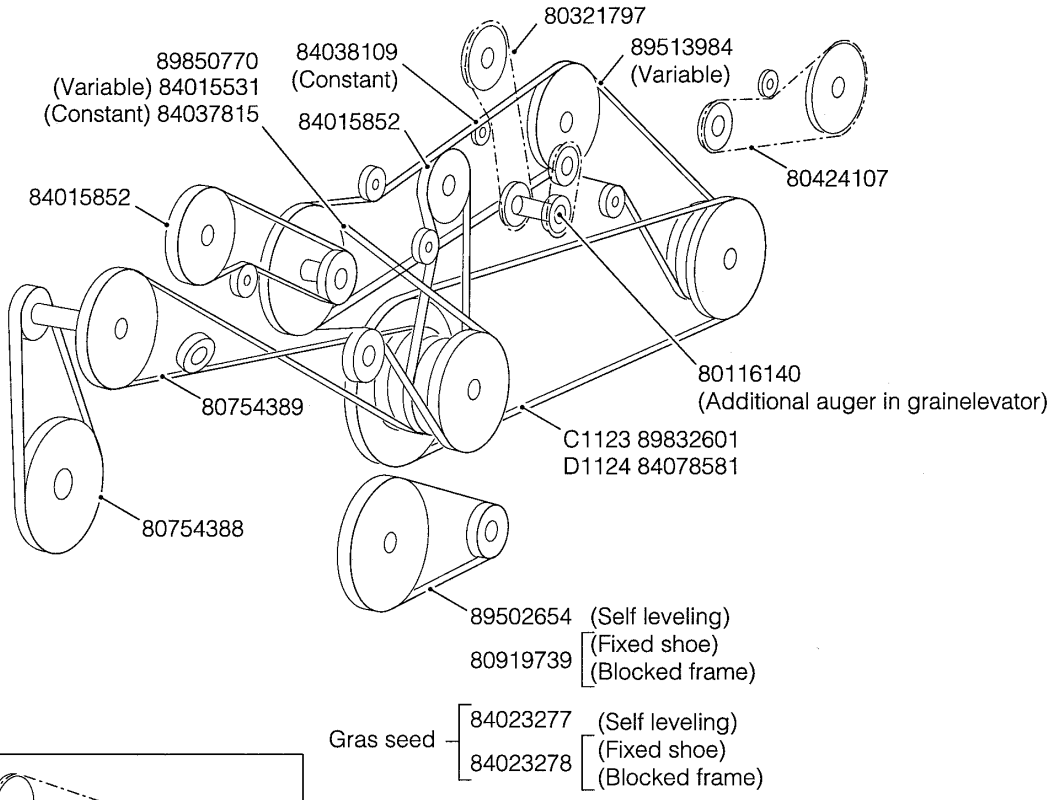

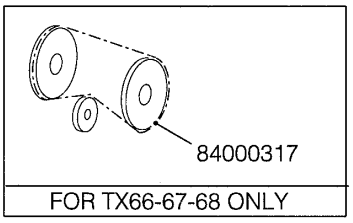

TX68 COMBINE - BASE UNIT

0.0039(01) MAINTENANCE PARTS

ссылка	Номер детали	Кол-во	Описание

MAINTENANCE PARTS
PARTICOLARI PER LA MANUTENZIONE
PIECES DE MAINTENANCE
TEILE FÜR DIE INSTANDHALTUNG

PIEZAS DE MANTENIMIENTO
PEÇAS DE MANUTENÇÃO
VEDLIGEHOLDELSESDELE
ONDERDELEN VOOR ONDERHOUD

LH

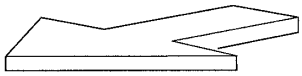

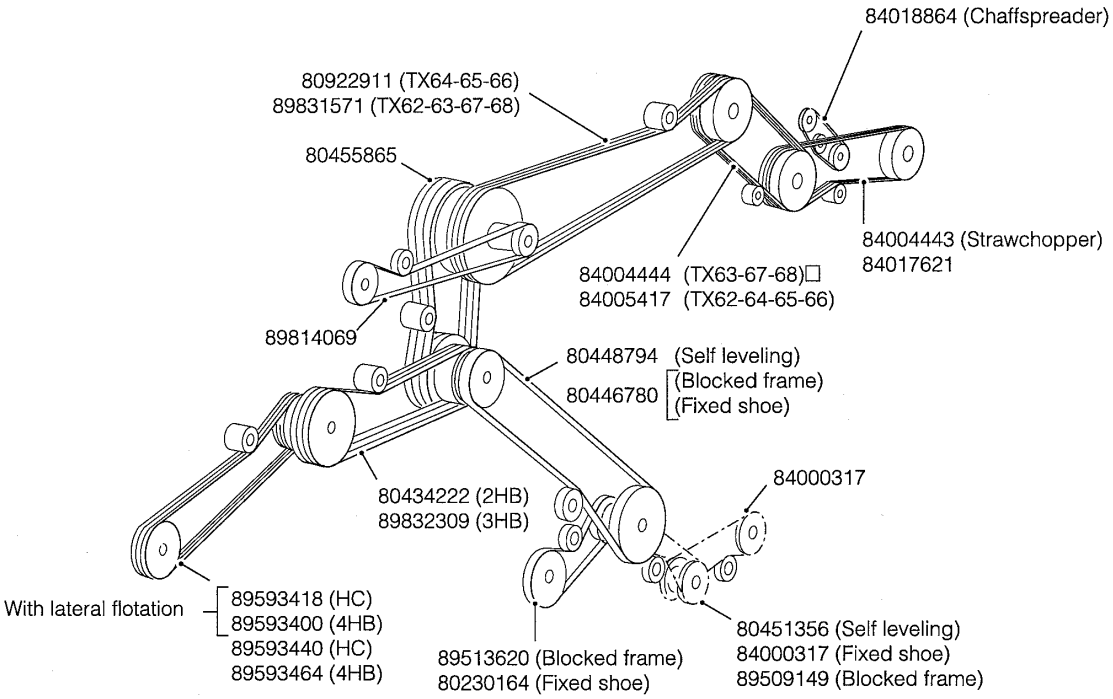

TX68 COMBINE - BASE UNIT

0.0039A(01) MAINTENANCE PARTS

ссылка	Номер детали	Кол-во	Описание

MAINTENANCE PARTS
PARTICOLARI PER LA MANUTENZIONE
PIECES DE MAINTENANCE
TEILE FÜR DIE INSTANDHALTUNG

PIEZAS DE MANTENIMIENTO
PEÇAS DE MANUTENÇÃO
VEDLIGEHOLDELSESDELE
ONDERDELEN VOOR ONDERHOUD

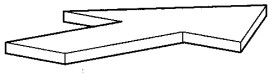

FORD (ENGINE)

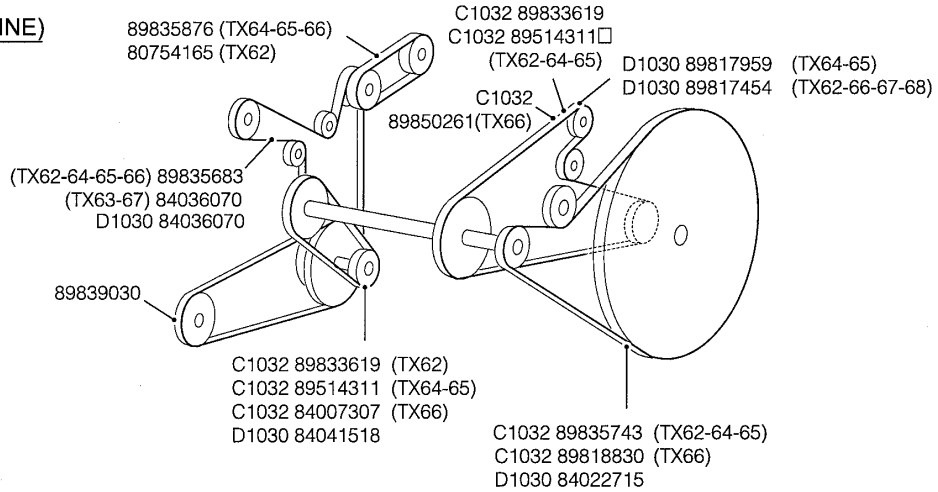

IVECO (ENGINE)

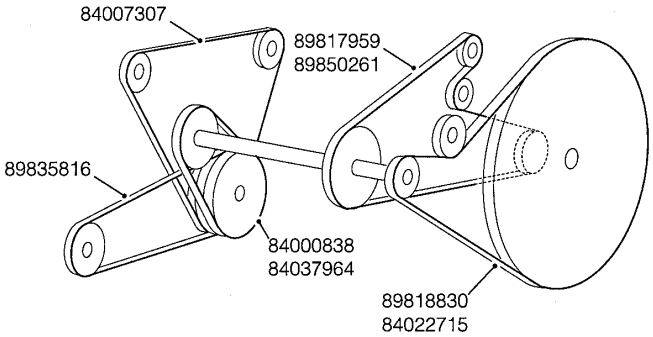

TX68 COMBINE - BASE UNIT

0.0039B(01) MAINTENANCE PARTS

ссылка	Номер детали	Кол-во	Описание

MAINTENANCE PARTS
PARTICOLARI PER LA MANUTENZIONE
PIECES DE MAINTENANCE
TEILE FÜR DIE INSTANDHALTUNG

PIEZAS DE MANTENIMIENTO
PEÇAS DE MANUTENÇÃO
VEDLIGEHOLDELSESDELE
ONDERDELEN VOOR ONDERHOUD

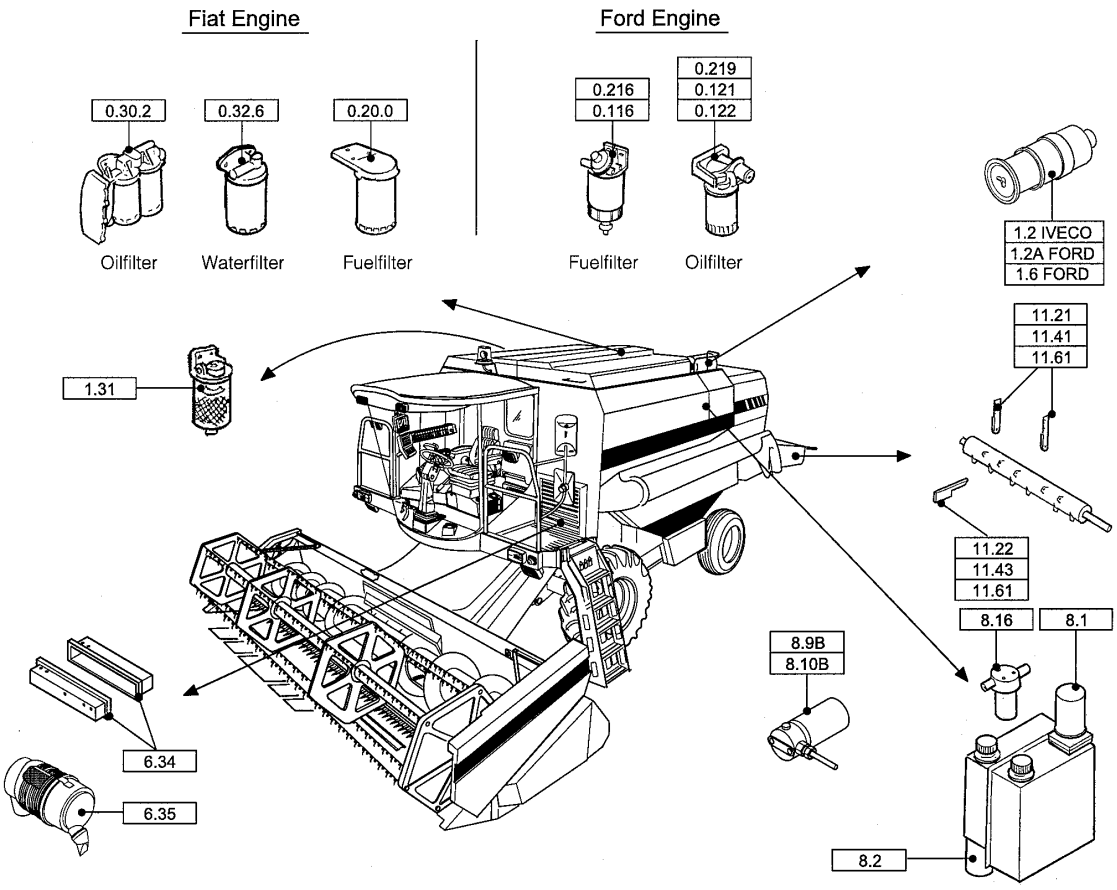

TX68 COMBINE - BASE UNIT

0.0039C(01) MAINTENANCE PARTS

ссылка	Номер детали	Кол-во	Описание

MAINTENANCE PARTS
PARTICOLARI PER LA MANUTENZIONE
PIECES DE MAINTENANCE
TEILE FÜR DIE INSTANDHALTUNG

PIEZAS DE MANTENIMIENTO
PEÇAS DE MANUTENÇÃO
VEDLIGEHOLDELSESDELE
ONDERDELEN VOOR ONDERHOUD

COMPLETE ENGINE GASKET KIT 1940128

PART NUMBER	QUANTITY	PART NUMBER	QUANTITY
4772331	1	61319045	1
4858607	13	61319046	1
4858608	8	61319047	1
4858609	12	61319050	4
4858610	1	61319056	1
4862313	1	61319058	1
4863955	2	61319059	1
4864034	1	61319061	1
8009901	1	61319083	1
10265060	1	61319085	2
10265160	1	61319208	6
10265460	1	61319394	2
10296260	1	61320345	1
10303460	1	61321089	2
10508360	1	61582822	12
14452881	1	98412509	1
14453581	6	98429280	5
14457881	1	98429281	2
14459081	2	98467211	1
14460181	1	98474303	13
14461680	1	98474306	2
14463581	4	98474308	16
14463881	1		
14464281	1		
14464681	1		
14464781	1		
14464881	2		
14465381	2		
14466581	4		
16508360	1		
16508460	1		
17286281	1		
17291281	1		
17296080	2		
40101471	1		
61316094	1		
61316095	1		
61317062	1		
61317701	1		
61317796	1		
61318303	1		
61318654	1		
61318820	1		
61318822	1		
61318823	1		
61318847	1		
61318850	2		
61318888	2		
61319044	1		

TOP ENGINE GASKET KIT 194129

PART NUMBER	QUANTITY
4772331	1
4858607	2
8009901	1
14453581	6
14460181	1
14464281	1
14464681	1
14464881	2
14465381	1
17291281	1
17296080	2
61317796	1
61318303	1
61318820	1
61318822	1
61319050	4
61319085	2
61319208	6
61319394	2
61320345	1
61321089	2
61582822	12
98412509	1
98474303	13
98474306	2

TX68 COMBINE - BASE UNIT

0.0039D(01) MAINTENANCE PARTS

ссылка	Номер детали	Кол-во	Описание

DECALS
DECALCOMANIE
DÉCALCOMANIE
ABZIEHBILDER

CALCOMANÍAS
DECALCOMANIAS
MÆRKATER
PLAKPLAATJES

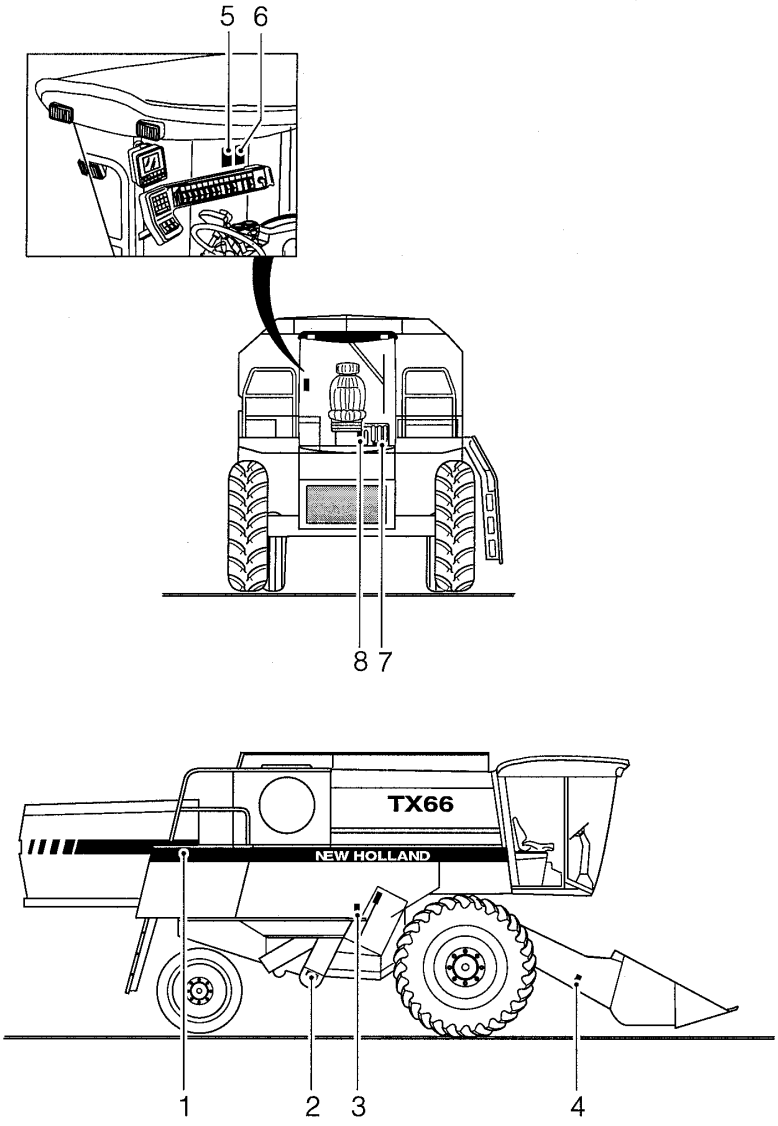

TX68 COMBINE - BASE UNIT

0.0039E(01) DECALS

ссылка	Номер детали	Кол-во	Описание

DECALS
DECALCOMANIE
DÉCALCOMANIE
ABZIEHBILDER

CALCOMANÍAS
DECALCOMANIAS
MÆRKATER
PLAKPLAATJES

1:80449973

2:84011345

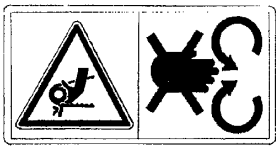

3:84004734

4:84004735

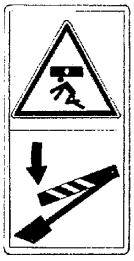

5:84012893
Background transparent

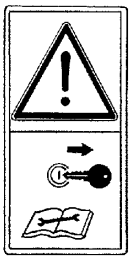

6:84012892

7:89812832

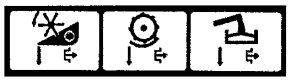

8:89812831(TX62)

9:84001845

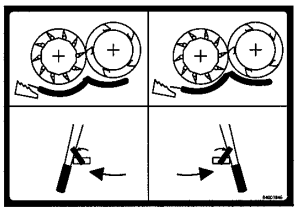

10:89839552

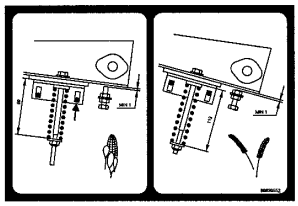

TX68 COMBINE - BASE UNIT

0.0039F(01) DECALS

ссылка	Номер детали	Кол-во	Описание

DECALS
DECALCOMANIE
DÉCALCOMANIE
ABZIEHBILDER

CALCOMANÍAS
DECALCOMANIAS
MÆRKATER
PLAKPLAATJES

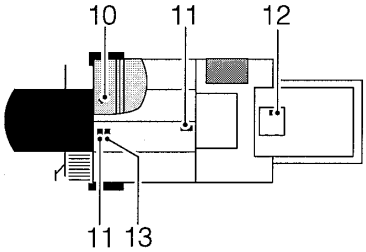

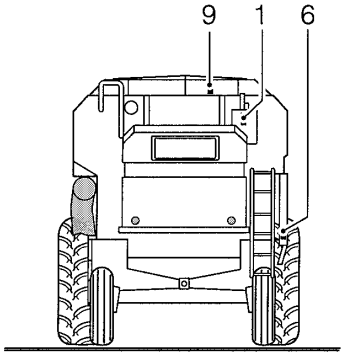

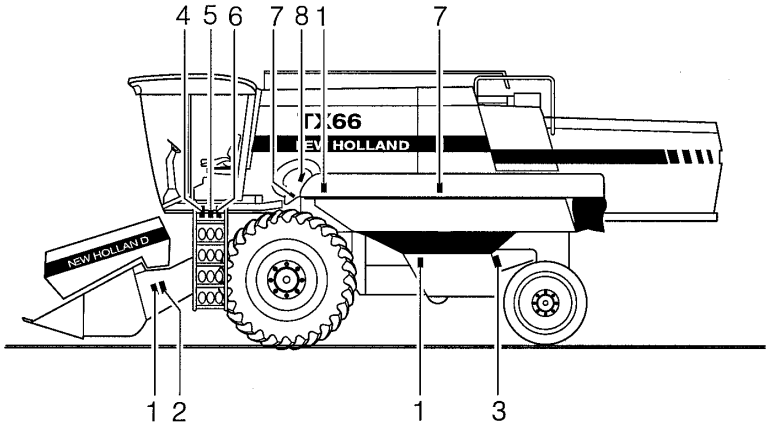

TX68 COMBINE - BASE UNIT

0.0039G(01) DECALS

ссылка	Номер детали	Кол-во	Описание

DECALS
DECALCOMANIE
DÉCALCOMANIE
ABZIEHBILDER

CALCOMANÍAS
DECALCOMANIAS
MÆRKATER
PLAKPLAATJES

1:84004734

2:84004735

3:84015656

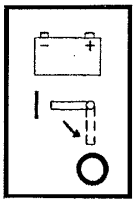

4:84004731

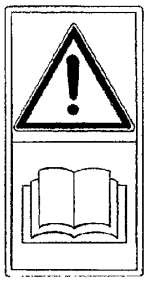

5:84004733

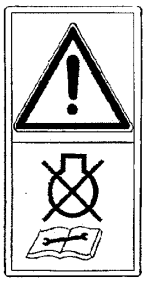

6:84004732

7:84011346

8:84004736

9:84004742

10: 80449973

11:84004740

12:84004743

13:84004744
Background yellow

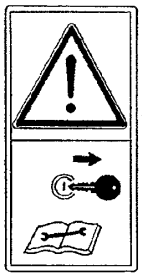

14: 84014117

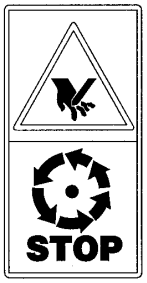

TX68 COMBINE - BASE UNIT

0.0039H(01) DECALS

ссылка	Номер детали	Кол-во	Описание

DECALS
DECALCOMANIE
DÉCALCOMANIE
ABZIEHBILDER

CALCOMANÍAS
DECALCOMANIAS
MÆRKATER
PLAKPLAATJES

80266578

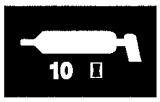

80266579

80266580

80449927

80425961

"Achtung! Fahrzeug schert aus".

80450396

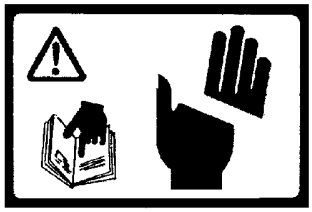

80922220

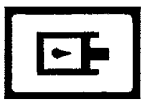

80922219

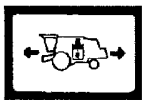

80743372

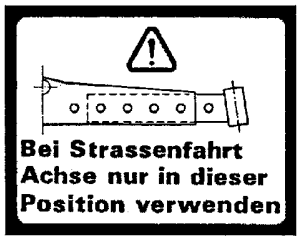

80913602

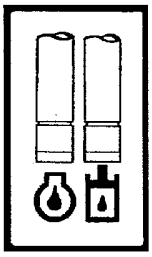

84053450

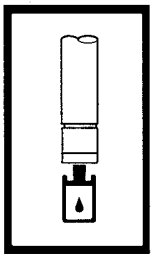

89507248

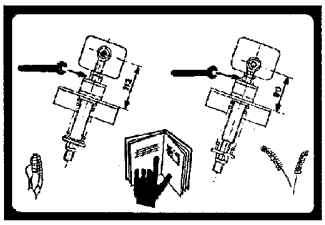

84433130

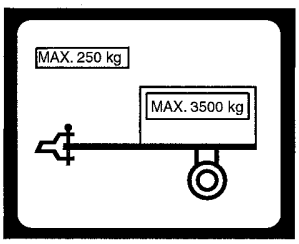

TX68 COMBINE - BASE UNIT

0.0039I(01) DECALS

ссылка	Номер детали	Кол-во	Описание

DECALS
DECALCOMANIE
DÉCALCOMANIE
ABZIEHBILDER

CALCOMANÍAS
DECALCOMANIAS
MÆRKATER
PLAKPLAATJES

89513272

84072701

89812242

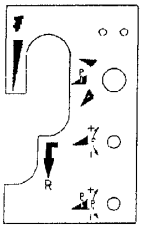

84018052
(TX62-63-64)

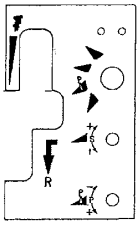

84018352
(TX62 - Less compensation)

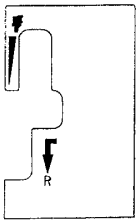

89815065

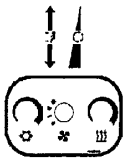

84000396

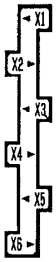

84001528

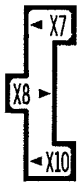

84004738

84004739

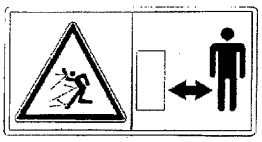

84000397

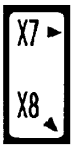

84000398

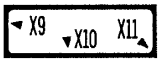

84000399

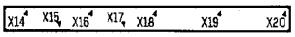

84001530

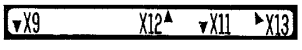

84001293

TX68 COMBINE - BASE UNIT

0.0039J(01) DECALS

ссылка	Номер детали	Кол-во	Описание

DECALS
DECALCOMANIE
DÉCALCOMANIE
ABZIEHBILDER

CALCOMANÍAS
DECALCOMANIAS
MÆRKATER
PLAKPLAATJES

84005453

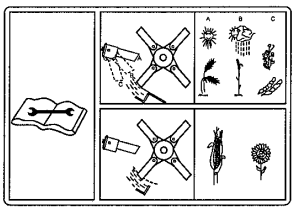

84011653

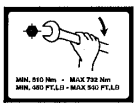

84011654

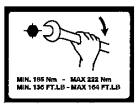

84011655

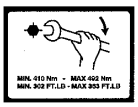

84011656

84001398

84002667

89506099 - 89506100

On door windowglass

84035508

84035316

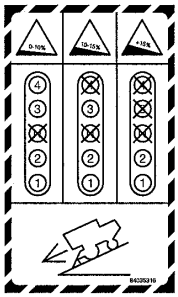

322323050

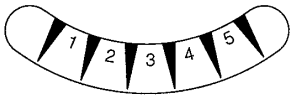

TX68 COMBINE - BASE UNIT

0.0039K(01) DECALS

ссылка	Номер детали	Кол-во	Описание

DECALS
DECALCOMANIE
DÉCALCOMANIE
ABZIEHBILDER

CALCOMANÍAS
DECALCOMANIAS
MÆRKATER
PLAKPLAATJES

FOR RUSSIA ONLY

84078384

84062737

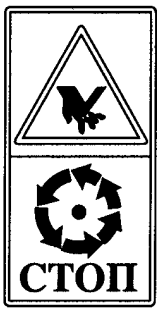

84058951

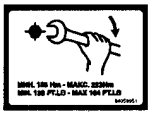

84058950

84429339

84972041

84058949

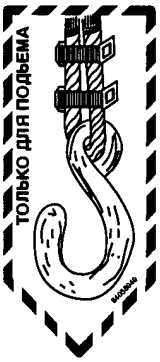

84429052

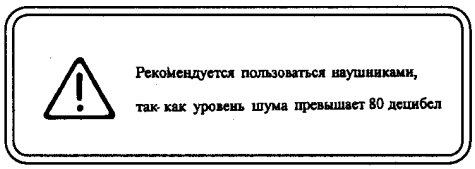

84072135

TX68 COMBINE - BASE UNIT

0.0039L(01) DECALS

ссылка	Номер детали	Кол-во	Описание

DECALS
DECALCOMANIE
DÉCALCOMANIE
ABZIEHBILDER

CALCOMANÍAS
DECALCOMANIAS
MÆRKATER
PLAKPLAATJES

1: 84001405 (TX62)
84001404 (TX64)
84014945 (TX65)
89593745 (TX66)
84001170 (TX68)
2: 89593760
3: 89593549
4: 89593759
5: 89593756
6: 89593761
7: 84005243
8: 84005225
9: 89506099

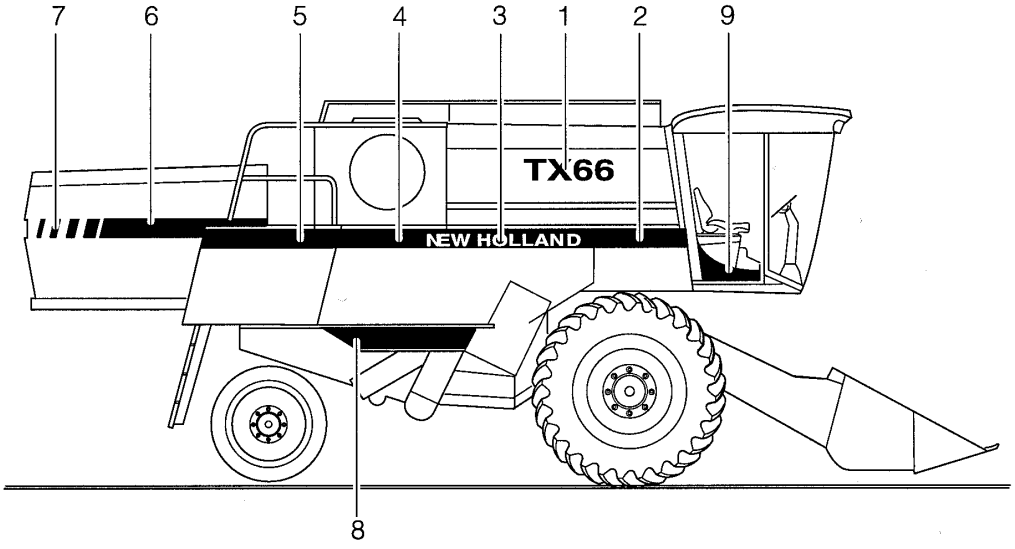

TX68 COMBINE - BASE UNIT

0.0039M(01) DECALS

ссылка	Номер детали	Кол-во	Описание

DECALS
DECALCOMANIE
DÉCALCOMANIE
ABZIEHBILDER

CALCOMANÍAS
DECALCOMANIAS
MÆRKATER
PLAKPLAATJES

1: 84001405 (TX62)
84001404 (TX64)
84014945 (TX65)
89593745 (TX66)
84001170 (TX68)
2: 89593755
3: 89593549
4: 89593758
5: 84005245
6: 89593761
7: 84005244
8: 89593753
9: 84005226
10: 89506100

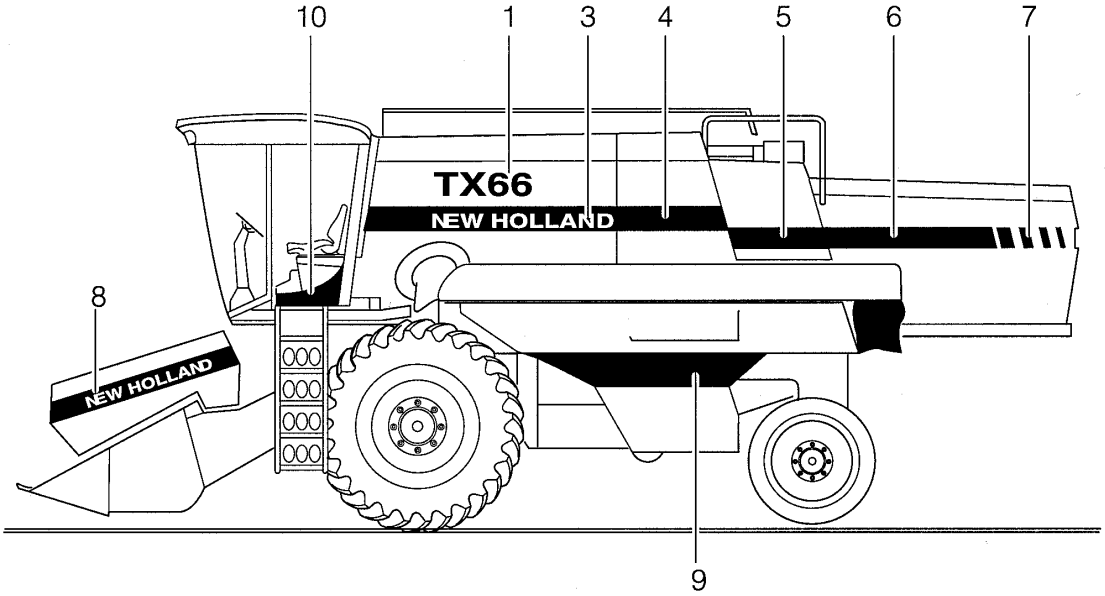

TX68 COMBINE - BASE UNIT

0.0039N(01) DECALS

ссылка	Номер детали	Кол-во	Описание

DECALS
DECALCOMANIE
DÉCALCOMANIE
ABZIEHBILDER

CALCOMANÍAS
DECALCOMANIAS
MÆRKATER
PLAKPLAATJES

1: 84002614

NEW HOLLAND

2: 84002582

3: 84002616 TX68

84002617 TX66

84002619 TX64

84002620 TX62

84035085 TX67

84002618 TX65

84035813 TX63

4: 84002613

5: 84005225

5: 89506099 C1169
84429737 D1170

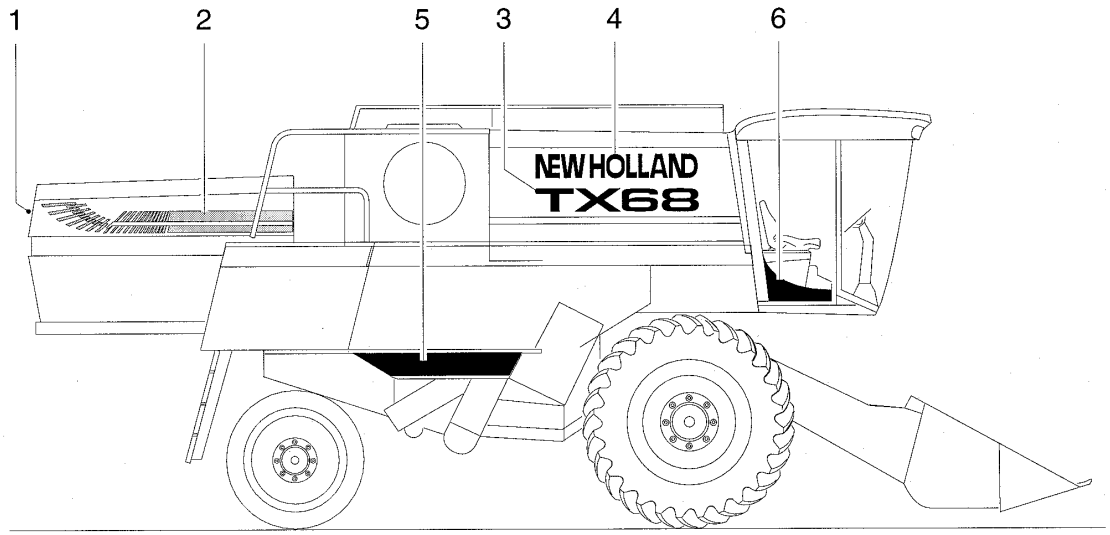

TX68 COMBINE - BASE UNIT

0.0039P(01) DECALS

ссылка	Номер детали	Кол-во	Описание

DECALS
DECALCOMANIE
DÉCALCOMANIE
ABZIEHBILDER

CALCOMANÍAS
DECALCOMANIAS
MÆRKATER
PLAKPLAATJES

1: 84002583

2: 84002613

3: 84002616 **TX68**

84002617 **TX66**

84002619 **TX64**

84002620 **TX62**

84035085 **TX67**

84002618 **TX65**

84035813 **TX63**

4: 84002825

5: 84002581

6: 84002543

7: 84035826

8: 89506100 C1169
84429738 D1170

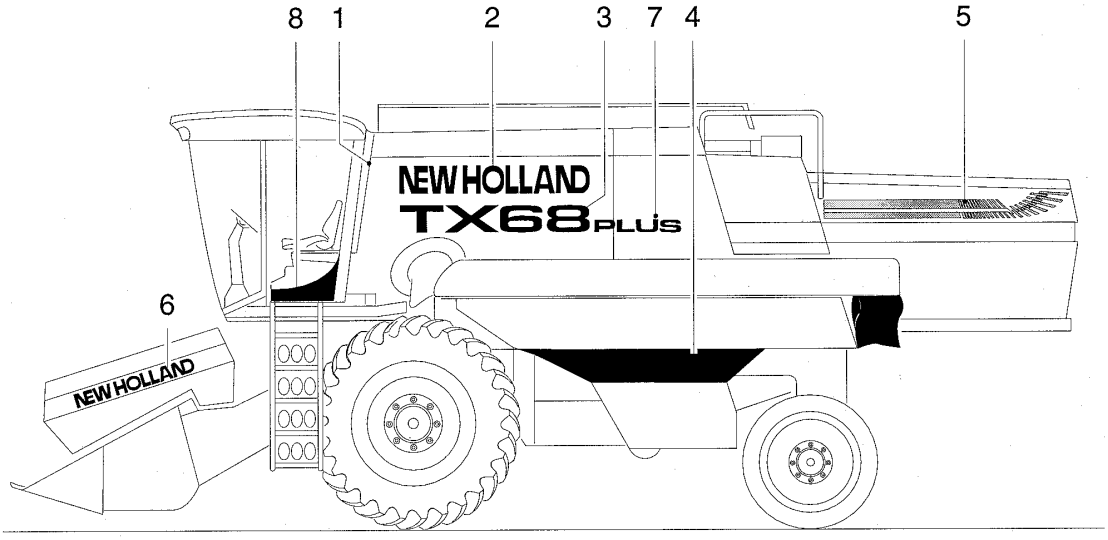

TX68 COMBINE - BASE UNIT

0.0039Q(01) DECALS

ссылка	Номер детали	Кол-во	Описание

1: 84443871

2: 84449940

3: 84449939

4: 84449944

84449943

84449942

84449941

TX68 **TX66** **TX65** **TX63**

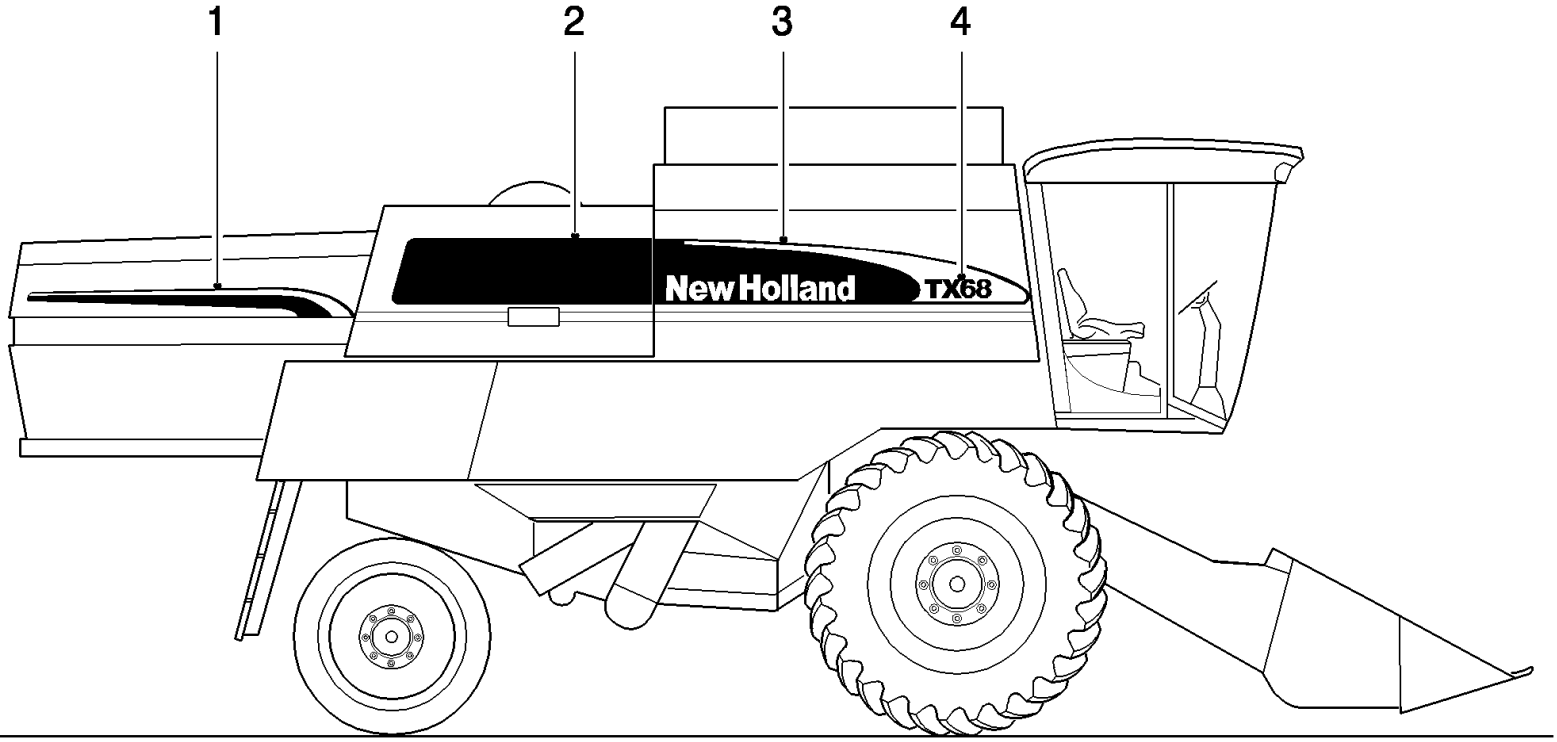

TX68 COMBINE - BASE UNIT

0.0039R(01) DECALS

ссылка	Номер детали	Кол-во	Описание

DECALS
DECALCOMANIE
DÉCALCOMANIE
ABZIEHBILDER

CALCOMANÍAS
DECALCOMANIAS
MÆRKATER
PLAKPLAATJES

1: 84002583

2: 84449944 **TX68**

84449943 **TX66**

84449942 **TX65**

84449941 **TX63**

3: 84449938
4: 84452698
5: 84443870

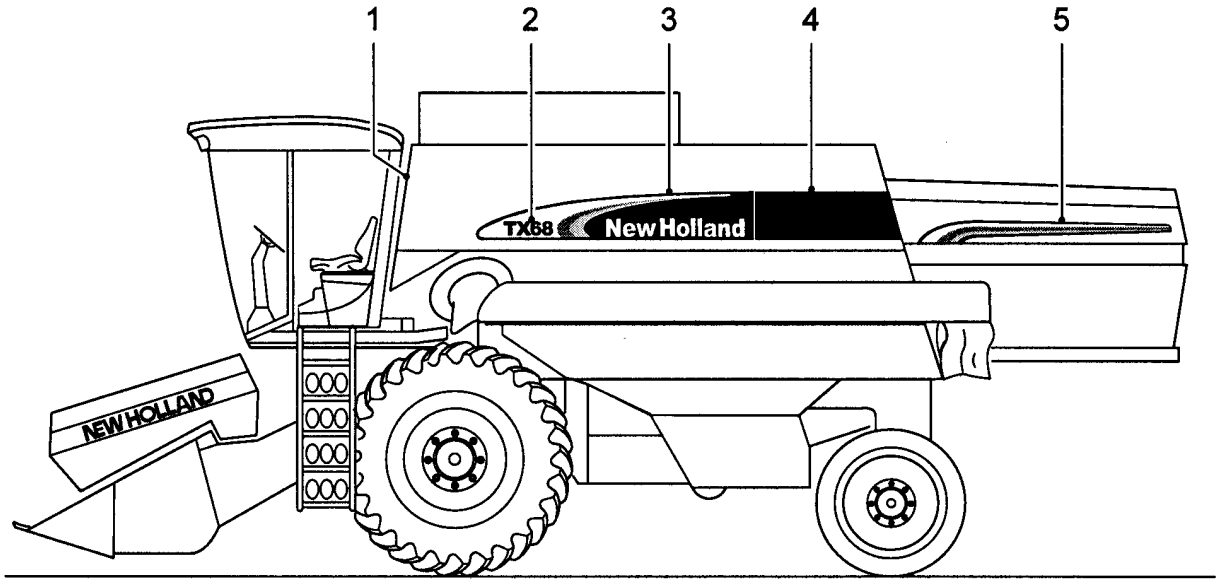

TX68 COMBINE - BASE UNIT

0.0039S(01) DECALS

ссылка	Номер детали	Кол-во	Описание

DECALS
DECALCOMANIE
DÉCALCOMANIE
ABZIEHBILDER

CALCOMANÍAS
DECALCOMANIAS
MÆRKATER
PLAKPLAATJES

1: 84457976
2: 84457979
3: 84457978
4: 84457980

84457982	84457984
TX63	**TX65**	**TX66**

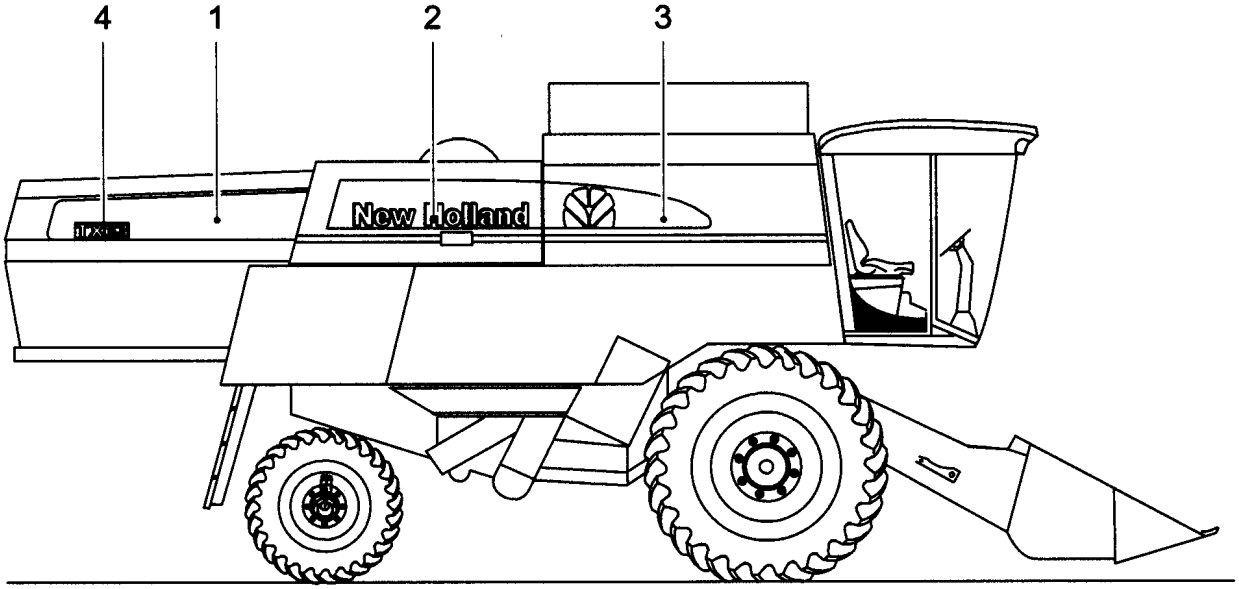

TX68 COMBINE - BASE UNIT

0.0039T(01) DECALS

ссылка	Номер детали	Кол-во	Описание

DECALS
DECALCOMANIE
DÉCALCOMANIE
ABZIEHBILDER

CALCOMANÍAS
DECALCOMANIAS
MÆRKATER
PLAKPLAATJES

1: 84457977
2: 84457975
3: 84457980

84457980	84457982	84457984
TX63	**TX65**	**TX66**

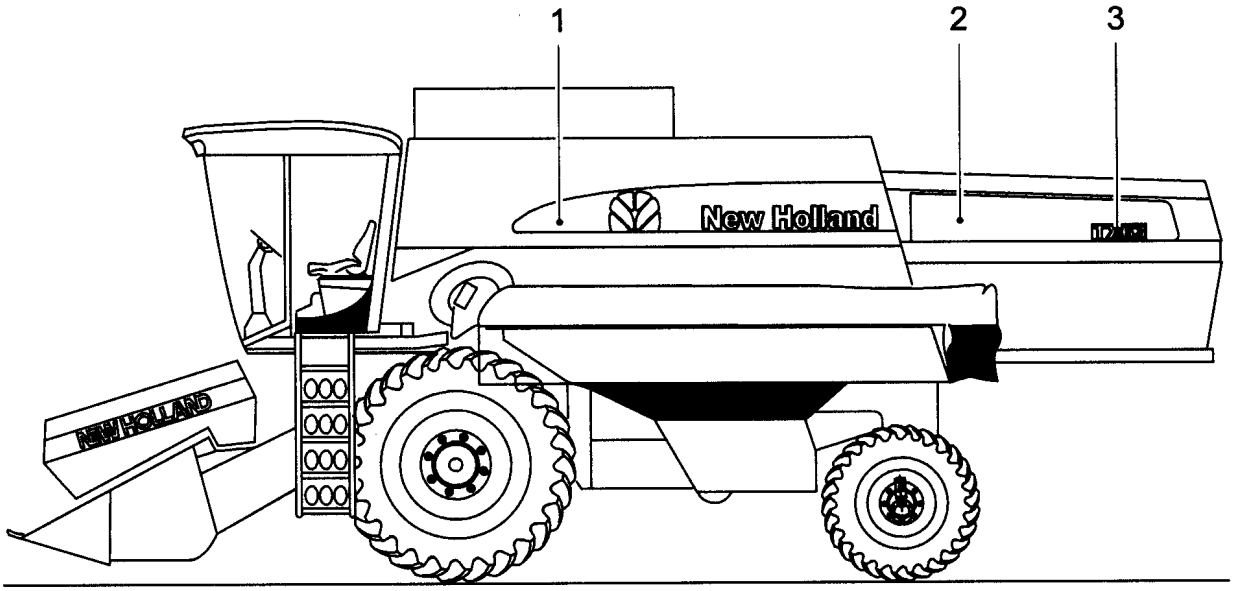

TX68 COMBINE - BASE UNIT

0.0039U(01) DECALS

ссылка	Номер детали	Кол-во	Описание

TX68 COMBINE - BASE UNIT

0.0039V(01) SERVICE MAINTENANCE KIT

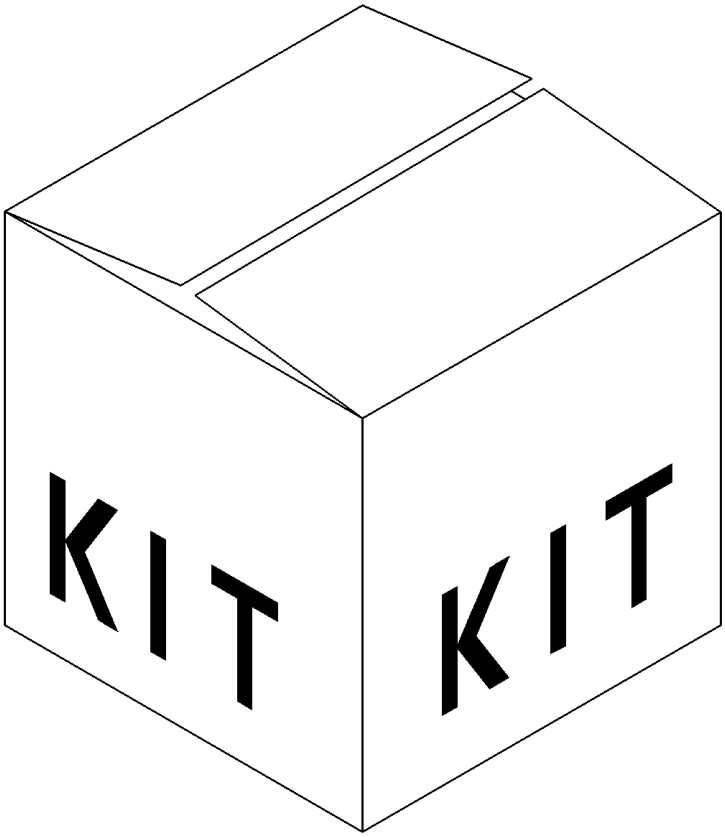

TX68 COMBINE - BASE UNIT

0.0039V(01) SERVICE MAINTENANCE KIT

ссылка	Номер детали	Кол-во	Описание
1	73317988	1	, 600 hrs, FOR TX63, TX65, TX66 ONLY
1	73317989	1	, 600 hrs, FOR TX68 ONLY

CODE TABLE
TABELLA CODICI
TABLE DES CODES
KODETABELLE

TABLA DE CÓDIGOS
TABELA DE CÓDIGOS
KODESKEMA
CODETABEL

CODE	TX66 -- =50	TX67 -- =44	TX68 -- =51 or 25	
C0001	--11001 to --15999			
C0002				
C0003	--12001 to --15999		--12001 to --15999	
C0004	--11001 to --11999		--11001 to --11999	
C0005	--10001 to --20999		--10001 to --20999	
C0006	--11001 to --19999		--11001 to --19999	
C0007	--16001 to --21999		--16001 to --21999	
C0008	--10001 to --15999		--11001 to --15999	
C0009	--10001 to --19999		--10001 to --19999	
C0010	--16001 to --19999		--16001 to --19999	
C0011	--10001 to --11999		--10001 to --11999	
C0012	--12001 to --15999		--12001 to --15999	
C0013	--10001 to --19999		--10001 to --15999	
C0014	--03001 to --20999		--03001 to --20999	
C0015	--22001 to --23999		--22001 to --23999	
C0016	--21001 to --25999		--21001 to --25999	
C0017	--20001 to --23999		--20001 to --23999	
C0018	--10001 to --23999		--10001 to --23999	
C0019				
C0020	--16001 to --24999		--16001 to --24999	
C0021	--05001 to --25999		--05001 to --25999	
C0022	--10001 to --25999		--10001 to --25999	
C0023	--18001 to --25999		--18001 to --25999	
C0024	--11001 to --25999		--18001 to --25999	
C0025	--10001 to --27999	--01001 to --04999	--18001 to --27999	
C0026	--10001 to --25999		--10001 to --25999	
C0027	--11001 to --25999		--11001 to --25999	
C0028	--16001 to --23999		--16001 to --23999	
C0029	--11001 to --23999		--11001 to --23999	
C0030	--24001 to --25999		--24001 to --25999	
C0031	--16001 to --23999		--16001 to --23999	
C0032	--24001 to --1032999	--01001 to --1032999	--24001 to --1032999	
C0033	--24001 to --27999	--01001 to --04999	--24001 to --27999	
C0034	--21001 to --1032999	--01001 to --1032999	--21001 to --1032999	
C0035	--26001 to --1032999	--01001 to --1032999	--26001 to --1032999	
C0036	--16001 to --1032999	--01001 to --1032999	--16001 to --1032999	
C0037	--04001 to --1032999	--01001 to --1032999	--04001 to --1032999	
C0038	--16001 to --25999		--16001 to --25999	
C0039	--11001 to --25999		--11001 to --25999	
C0040	--10001 to --10999		--10001 to --10999	
C0041	--26001 to --1093999	--01001 to --1093999	--26001 to --1093999	
C0042	--1074001 to --1075999	--1074001 to --1075999	--1074001 to --1075999	
C0043	--26001 to --1076999	--01001 to --1076999	--26001 to --1076999	
C0044	--1033001 to --1090999	--1033001 to --1090999	--1033001 to --1090999	
C0045	--05001 to --1076999	--01001 to --1076999	--05001 to --1076999	
C0046	--1033001 to --1076999	--1033001 to --1076999	--1033001 to --1076999	
C0047	--13001 to --1032999		--13001 to --1032999	
C0048	--1048001 to --1127999	--1048001 to --1127999	--1048001 to --1127999	
C0049	--1033001 to --1109999	--1033001 to --1109999	--1033001 to --1109999	
C0050	--26001 to --1163999	--01001 to --1163999	--26001 to --1163999	
C0051	--1033001 to --1169999	--1033001 to --1169999	--1033001 to --1169999	

TX68 COMBINE - BASE UNIT

0.0041A(01) CODE TABLE FROM C0001 UNTIL C0046

ссылка	Номер детали	Кол-во	Описание

CODE TABLE
TABELLA CODICI
TABLE DES CODES
KODETABELLE

TABLA DE CÓDIGOS
TABELA DE CÓDIGOS
KODESKEMA
CODETABEL

CODE	TX66 -- =50	TX67 -- =44	TX68 -- =51 or 25	
C0052	--20001 to --1169999	--01001 to --1169999	--20001 to --1169999	
C0053	--10001 to --1169999	--01001 to --1169999	--10001 to --1169999	
C0054	--20001 to --1169999	--01001 to --1169999	--20001 to --1169999	
C0055	--10001 to --1169999	--01001 to --1169999	--10001 to --1169999	
C0056	--1077001 to --1169999	--1077001 to --1169999	--1077001 to --1169999	
C0057	--1033001 to --1169999	--01001 to --1169999	--1033001 to --1169999	
C0058	--26001 to --1169999	--01001 to --1169999	--26001 to --1169999	
C0059	--10001 to --1189999	--01001 to --1189999	--10001 to --1189999	
C0060	--24001 to --1163999	--01001 to --1163999	--24001 to --1163999	
C0061	--22001 to --1163999	--01001 to --1163999	--22001 to --1163999	
C0062	--1064001 to --1193999	--1064001 to --1193999	--1064001 to --1193999	
C0063	--1128001 to --1193999	--1128001 to --1193999	--1128001 to --1193999	
C0064	--20001 to --1193999	--01001 to --1193999	--20001 to --1193999	
C0065	--17001 to --1189999	--11001 to --1189999	--17001 to --1189999	
C0066	--11001 to --1137999	--11001 to --1137999	--17001 to --1137999	
C0067	--1170001 to --1253999	--1170001 to --1253999	--1170001 to --1253999	
C0068	--1194001 to --1245999	--1194001 to --1245999	--1194001 to --1245999	
C0069	--1070001 to --1245999	--1070001 to --1245999	--1070001 to --1245999	
C0070	--24001 to --1253999	--01001 to --1253999	--24001 to --1253999	
C0071	--1066001 to --1245999	--1066001 to --1245999	--1066001 to --1245999	
C0072	--11001 to --1241999	--01001 to --1241999	--11001 to --1241999	
C0073	--1088001 to --1271999	--1088001 to --1271999	--1088001 to --1271999	
C0074	--1124001 to --1253999	--1124001 to --1253999	--1124001 to --1253999	
C0075	--1170001 to --1347999	--1170001 to --1347999	--1170001 to --1347999	
C0076	--1077001 to --1379999	--1077001 to --1379999	--1077001 to --1379999	
C1032	--01001 to --1032999	--01001 to --1032999	--01001 to --1032999	
C1043	--01001 to --1043999	--01001 to --1043999	--01001 to --1043999	
C1047	--01001 to --1047999	--01001 to --1047999	--01001 to --1047999	
C1052	--01001 to --1052999	--01001 to --1052999	--01001 to --1052999	
C1056	--01001 to --1056999	--01001 to --1056999	--01001 to --1056999	
C1065	--01001 to --1065999	--01001 to --1065999	--01001 to --1065999	
C1069	--01001 to --1069999	--01001 to --1069999	--01001 to --1069999	
C1076	--01001 to --1076999	--01001 to --1076999	--01001 to --1076999	
C1080	--01001 to --1080999	--01001 to --1080999	--01001 to --1080999	
C1087	--01001 to --1087999	--01001 to --1087999	--01001 to --1087999	
C1090	--01001 to --1090999	--01001 to --1090999	--01001 to --1090999	
C1109	--01001 to --1109999	--01001 to --1109999	--01001 to --1109999	
C1113	--01001 to --1113999	--01001 to --1113999	--01001 to --1113999	
C1123	--01001 to --1123999	--01001 to --1123999	--01001 to --1123999	
C1127	--01001 to --1127999	--01001 to --1127999	--01001 to --1127999	
C1135	--01001 to --1135999	--01001 to --1135999	--01001 to --1135999	
C1149	--01001 to --1149999	--01001 to --1149999	--01001 to --1149999	
C1161	--01001 to --1161999	--01001 to --1161999	--01001 to --1161999	
C1163	--01001 to --1163999	--01001 to --1163999	--01001 to --1163999	
C1165	--01001 to --1165999	--01001 to --1165999	--01001 to --1165999	
C1169	--01001 to --1169999	--01001 to --1169999	--01001 to --1169999	
C1179	--01001 to --1179999	--01001 to --1179999	--01001 to --1179999	
C1189	--01001 to --1189999	--01001 to --1189999	--01001 to --1189999	
C1193	--01001 to --1193999	--01001 to --1193999	--01001 to --1193999	
C1205	--01001 to --1205999	--01001 to --1205999	--01001 to --1205999	
C1215	--01001 to --1215999	--01001 to --1215999	--01001 to --1215999	

TX68 COMBINE - BASE UNIT

0.0041C(01) CODE TABLE FROM C0047 UNTIL C1161

ссылка	Номер детали	Кол-во	Описание

CODE TABLE
TABELLA CODICI
TABLE DES CODES
KODETABELLE

TABLA DE CÓDIGOS
TABELA DE CÓDIGOS
KODESKEMA
CODETABEL

CODE	TX66 -- =50	TX67 -- =44	TX68 -- =51 or 25	
C1237	--01001 to --1237999	--01001 to --1237999	--01001 to --1237999	
C1241	--01001 to --1241999	--01001 to --1241999	--01001 to --1241999	
C1245	--01001 to --1245999	--01001 to --1245999	--01001 to --1245999	
C1253	--01001 to --1253999	--01001 to --1253999	--01001 to --1253999	
C1277	--01001 to --1277999	--01001 to --1277999	--01001 to --1277999	
C1301	--01001 to --1301999	--01001 to --1301999	--01001 to --1301999	
C1327	--01001 to --1327999	--01001 to --1327999	--01001 to --1327999	
C4420	--01001 to --03999		--01001 to --03999	
C4425	--01001 to --03999		--01001 to --03999	
C4450	--01001 to --04999		--01001 to --04999	
C4510	--01001 to --07999		--01001 to --07999	
C4540	--01001 to --09999		--01001 to --09999	
C4550	--01001 to --10999		--01001 to --10999	
C4620	--01001 to --09999		--01001 to --09999	
C4640	--01001 to --02999		--01001 to --02999	
C5410	--01001 to --12999		--01001 to --12999	
C5500	--01001 to --15999		--01001 to --15999	
C5510	--01001 to --15999		--01001 to --15999	
C5530	--01001 to --16999		--01001 to --16999	
C5550	--01001 to --17999		--01001 to --17999	
C5620	--01001 to --10999		--01001 to --10999	
C5640	--01001 to --11999		--01001 to --11999	
C5660	--01001 to --11999		--01001 to --11999	
C6400	--01001 to --19999		--01001 to --19999	
C6405	--01001 to --23999		--01001 to --23999	
C6410	--01001 to --23999		--01001 to --23999	
C6430	--01001 to --24999		--01001 to --24999	
C6500	--01001 to --21999		--01001 to --21999	
C6560	--01001 to --18999		--01001 to --18999	
C6620	--01001 to --19999		--01001 to --19999	
C6630	--01001 to --19999		--01001 to --19999	
C6670	--01001 to --20999		--01001 to --20999	
C6680	--01001 to --20999		--01001 to --20999	
C7510	--01001 to --25999		--01001 to --25999	
C7520	--01001 to --25999		--01001 to --25999	
C7580	--01001 to --27999	--01001 to --04999	--01001 to --27999	
C7590	--01001 to --27999	--01001 to --04999	--01001 to --27999	
D1030	--1033001	--01001	--1033001	
D1033	--1033001	--1033001	--1033001	
D1044	--1044001	--1044001	--1044001	
D1048	--1048001	--1048001	--1048001	
D1053	--1053001	--1053001	--1053001	
D1057	--1057001	--1057001	--1057001	
D1066	--1066001	--1066001	--1066001	
D1070	--1070001	--1070001	--1070001	
D1077	--1077001	--1077001	--1077001	
D1081	--1081001	--1081001	--1081001	
D1088	--1088001	--1088001	--1088001	
D1091	--1091001	--1091001	--1091001	
D1094	--1094001	--1094001	--1094001	
D1110	--1110001	--1110001	--1110001	

TX68 COMBINE - BASE UNIT

0.0041E(01) CODE TABLE FROM C1163 UNTIL D1053

ссылка	Номер детали	Кол-во	Описание

CODE TABLE
TABELLA CODICI
TABLE DES CODES
KODETABELLE

TABLA DE CÓDIGOS
TABELA DE CÓDIGOS
KODESKEMA
CODETABEL

CODE	TX66 -- =50	TX67 -- =44	TX68 -- =51 or 25	
D1114	--1114001	--1114001	--1114001	
D1124	--1124001	--1124001	--1124001	
D1128	--1128001	--1128001	--1128001	
D1136	--1136001	--1136001	--1136001	
D1138	--1138001	--1138001	--1138001	
D1150	--1150001	--1150001	--1150001	
D1162	--1162001	--1162001	--1162001	
D1164	--1164001	--1164001	--1164001	
D1166	--1166001	--1166001	--1166001	
D1170	--1170001	--1170001	--1170001	
D1180	--1180001	--1180001	--1180001	
D1190	--1190001	--1190001	--1190001	
D1194	--1194001	--1194001	--1194001	
D1206	--1206001	--1206001	--1206001	
D1216	--1216001	--1216001	--1216001	
D1238	--1238001	--1238001	--1238001	
D1242	--1242001	--1242001	--1242001	
D1246	--1246001	--1246001	--1246001	
D1254	--1254001	--1254001	--1254001	
D1278	--1278001	--1278001	--1278001	
D1302	--1302001	--1302001	--1302001	
D1328	--1328001	--1328001	--1328001	
D4420	--04001	--01001	--04001	
D4425	--04001	--01001	--04001	
D4450	--05001	--01001	--05001	
D4510	--08001	--01001	--08001	
D4540	--10001	--01001	--10001	
D4550	--11001	--01001	--11001	
D4620	--10001	--01001	--10001	
D4640	--03001	--01001	--03001	
D5410	--13001	--01001	--13001	
D5420	--13001	--01001	--13001	
D5500	--16001	--01001	--16001	
D5510	--16001	--01001	--16001	
D5530	--17001	--01001	--17001	
D5550	--18001	--01001	--18001	
D5620	--11001	--01001	--11001	
D5640	--12001	--01001	--12001	
D5660	--12001	--01001	--12001	
D6400	--20001	--01001	--20001	
D6405	--24001	--01001	--24001	
D6410	--24001	--01001	--24001	
D6430	--25001	--01001	--25001	
D6500	--22001	--01001	--22001	
D6560	--19001	--01001	--19001	
D6620	--20001	--01001	--20001	
D6630	--20001	--01001	--20001	
D6670	--21001	--01001	--21001	
D6680	--21001	--01001	--21001	
D7510	--26001	--01001	--26001	
D7520	--26001	--01001	--26001	

TX68 COMBINE - BASE UNIT

0.0041G(01) CODE TABLE FROM D1057 UNTIL D6405

ссылка	Номер детали	Кол-во	Описание

CODE TABLE
TABELLA CODICI
TABLE DES CODES
KODETABELLE

TABLA DE CÓDIGOS
TABELA DE CÓDIGOS
KODESKEMA
CODETABEL

CODE	TX66 -- =50	TX67 -- =44	TX68 -- =51 or 25	
D7550	--28001	--05001	--28001	
D7580	--28001	--05001	--28001	

TX68 COMBINE - BASE UNIT

0.0041I(01) CODE TABLE FROM D6410 UNTIL D7580

ссылка	Номер детали	Кол-во	Описание

ABBREVIATIONS ABBREVIAZIONI ABREVIATIONS ABÜRZUNGEN			ABREVIACIONES ABREVIATURAS FORKORTELSER AFKORTINGEN	
	Description **Denominacion**	**Descrizione** **Denominação**	**Description** **Beskrivelse**	**Bezeichnung** **Beschrijving**
ASSY	ASSEMBLY MONTAJE	COMPLESSIVO GRUPO	ENSEMBLE AGGREGAT	KOMPL. EINHEIT MONTAGEGROEP
AR	AS REQUIRED SEGÚN NECESIDAD	A RICHIESTA SEGUNDO NECESSIDADE	SELON BESOIN EFTER BEHOV	NACH BEDARF NAAR BEHOEFTE
NS	NOT SERVICED NO DISPONIBLE	NON DISPONIBILE NÃO DISPONIVEL	PAS DISPONIBLE IKKE DISPONIBEL	NICHT LIEFERBAR NIET BESCHIKBAAR
NSS	NOT SERVICED SEPARATELY NO DISPON.PAR SEPARADO	NON DISPONIBILE SEPARATAM. NÃO DISPON.EM SEPARADO	PAS DISPON. SEPAR. IKKE DISPON.SEPARAT	NICHT SEPARAT LIEFERBAR NIET AFZOND. BESCHIKB.
INCL.	INCLUDES INCLUYE	COMPRENDE INCLUI	COMPREND INDKLUDERER	ENTHÄLT BEVAT
(2,3)	INCLUDES INCLUYE	COMPRENDE INCLUI	COMPREND INDKLUDERER	ENTHÄLT BEVAT
LH	LEFT HAND MANO IZQUIERDA	LATO SINISTRO MÃO ESQUERDA	COTE GAUCHE VENSTRE	LINKS LINKS
RH	RIGHT HAND MANO DERECHA	LATO DESTRO MÃO DIREITA	COTE DROIT HØJRE	RECHTS RECHTS
SEE FIGURE	SEE FIGURE VÈRSE FIGURA	VEDERE FIGURA VEJA FIGURA	VOIR FIGURE SE FIGUR	SIEHE ABBILDUNG ZIE AFBEELDING
THK.	THICKNESS ESPESAR	SPESSORE ESPESSURA	EPAISSEUR TYKKELSE	STÄRKE DIKTE
Ø or DIA.	DIAMETER DIAMETRO	DIAMETRO DIÁMETRO	DIAMETRE DIAMETER	DURCHMESSER DIAMETER
I.D.	INSIDE DIAMETER DIAMETRO INTERIOR	DIAMETRO INTERNO DIÁMETRO INTERNO	DIAMETRE INTER. INDVENDIG DIAMETER	INNENDURCHMESSER BINNENDIAMETER
O.D.	OUTSIDE DIAMETER DIAMETRO EXTERIOR	DIAMETRO ESTERNO DIÁMETRO EXTRIOR	DIAMETRE EXTERIEUR UDVENDIG DIAMETER	AUSSENDURCHMESSER BUITENDIAMETER
ACC	ACCESSORY ACCESORIO	ACCESSORIO ACESSORIO	ACCESSOIRE TILBEHØR	ZUBEHÖR TOEBEHOREN
OPT	OPTION OPCIONES	ALTERNATIVA OPÇIONAL	FACULTATIF ALTERNATIV	WAHLWEISE OPTIE
P.T.O.	POWER TAKE-OFF TOMA DE FUERZA	PRESA DI FORZA TOMADA DE FORÇA	PRISE DE FORCE KRAFTUDTAG	ZAPFWELLE AFTAKAS
T or Z=	TEETH DIENTES	DENTI DENTES	DENTS TÆNDER	ZAHMEN TANDEN
L	LENGTH LARGO	LUNGHEZZA COMPRIMENTO	LONG LÆNGDE	LANG LENGTE
FRONT	FRONT DELANTERO	ANTERIORE DIANTEIRO	AVANT FORAN	VORN VOORAAN
REAR	REAR TRASERO	POSTERIORE TRASEIRO	ARRIERE BAG	HINTERE ACHTERAAN
LOWER	LOWER BAJAR	INFERIORE INFERIOR	INFERIEUR NEDRE	SENKEN ONDER
UPPER	UPPER DE ARRIBA	SUPERIORE SUPERIOR	SUPERIEUR ØVRE	OBER BOVEN
H.F.	HARD FACE TEMPRA	TEMPRA TO TEMPERADO	TEMPRE HÆRDED	GEHÄRT VERHARD
WITH or W/	WITH CON	CON COM	AVEC MED	MIT MET
WITHOUT or L/	WITHOUT SIN	SENZA SEM	SANS UDEN	OHNE ZONDER
NA	NORTH AMERICA NORTE AMÉRICA	NORD AMERICA AMÉRICA DO NORTE	ETATS-UNIS DU NORD NORDAMERIKA	NORD-AMERICA NOORD-AMERIKA
NLS	NO LONGER SERVICED YA NO SE SUMINISTRA	NON PIU' DISPONIBILE A RICAMBIO NÃO MAIS DISPONÍVEL EM SERVIÇO	PLUS DISPO.EN SERVICE SERVICERES IKKE MERE	NICHT MEHR ERHÄLTLICH NIET LANGER GELEVERD
PL	PROCURE LOCALLY ADQUIRIR EN PLAZA	DA PROCURARE IN LOCO PROCURA LOCAL	PROCURER LOCALEMENT FREMSKAFFES LOKALT	ÖRTLICH ZU BESCHAFFEN LOKAAL AANKOPEN
OW	ORDER THROUGH WHOLEGOODS PEDIR COMO MERCANCÍA GENERAL	ORDINARE TRAMITE MAGAZZINO ENCOMENDA POR MERCADORIAS	COMMANDER EN FOURNITURE BESTIL GENNEM MASKINSALG	BEIZUBEHÖR-LOG. ZU BESTELLEN BESTELLEN ALS STUKGOED
OC	ORDER COMPONENTS PEDIR COMPONENTES	ORDINARE COMPONENTI ENCOMENDA DE COMPONENTES	COMMANDER COMPOSANTS BESTIL KOMPONENTER	BESTELLPOSTEN COMPONENTEN BESTELLEN

TX68 COMBINE - BASE UNIT

0.0042(01) ABBREVIATIONS

ссылка	Номер детали	Кол-во	Описание

CONVERSION CHART (INC-MM)
TABELLA DI CONVERSIONE (POLLICI-MM)
TABLE DE CONVERSION (INCH-MM)
UMRECHNUNGSTABELLE (INCH-MM)

TABLA DE CONVERSIÓN (PULG-MM)
TABELA DE CONVERSÃO (POL.-MM)
KONVERTERINGSKORT (INC-MM)
CONVERSIETABEL (INCH-MM)

Inch Fractions and Decimals to Millimeter Equivalents
Le frazioni e i decimali del pollice equvalgono al millimetri
Les tractions et les décimales du pouce équivalent aux millimètres
Die Zollbruchteile und Zolldezimalen den Millimetern entsprechen

Las fracciónes y los decimalesde la pulgadaequivalen a los milímetros
As fracções e os decimais de polegada equivalem a milímetros
Brøkerne og decimalerne for tommer svarer til millimeter
Het equivalent tussen de breuken en de decimalen van een duim naar millimeters

INCHES		MM	INCHES		MM	INCHES		MM	INCHES		MM
Fraction	Decimal		Fraction	Decimal		Fraction	Decimal		Fraction	Decimal	
-	.0004	.10	-	.3	7.620	-	.7874	20	-	1.969	50
-	.001	.025	5/16	.3125	7.938	51/64	.7969	20.241	2	2.000	50.8
-	.0039	.10	-	.3150	8	13/64	.8125	20.638	2-1/8	2.125	54
-	.005	.127	21/64	.3281	8.334	-	.8268	21	-	2.165	56
-	.0079	.2	-	.3346	8.5	53/64	.8281	21.034	2-1/4	2.250	57.2
-	.0098	.25	11/32	.3438	8.731	27/32	.8438	21.431	-	2.362	60
-	.01	.254	-	.3543	9	55/64	.8594	21.828	2-3/8	2.375	60.3
-	.0118	3	23/64	.3594	9.128	-	.8662	22	2-1/2	2.500	63.5
1/64	.0156	.397	-	.3740	9.5	7/8	.8750	22.225	-	2.559	66
-	.0157	.4	3/8	.375	9.526	57/64	.8906	22.622	2-5/8	2.625	66.7
-	.0197	.5	25/64	.3908	9.922	-	.9	22.860	2-3/4	2.750	69.9
-	.0236	.6	-	.3937	10	-	.9055	23	-	2.756	70
-	.025	.635	-	.4	10.160	29/32	.9063	23.019	2-7/8	2.850	73
-	.0276	.7	13/32	.4062	10.319	59/64	.9219	23.416	-	2.953	75
-	.0295	.75	-	.4134	10.5	15/16	.9375	23.813	3	3.000	76.2
1/32	.0313	.794	27/64	.4219	10.716	-	.9449	14	-	3.150	80
-	.0315	.8	-	.4331	11	61/64	.9531	24.209	3-1/4	3.250	82.6
-	.0354	.9	7/16	.4375	11.113	31/32	.9688	24.608	-	3.346	85
-	.0394	1	29/64	.4531	11.509	-	.9843	25	3-1/2	3.500	88.9
3/64	.0469	1.191	15/32	.4688	11.906	1	1.000	25.400	-	3.543	90
-	.0472	1.2	-	.4724	12	-	1.024	26	-	3.740	95
-	.05	1.270	31/64	.4844	12.303	1-1/16	1.062	26.988	3-3/4	3.750	95.3
-	.0551	1.4	-	.4921	12.5	-	1.063	27	-	3.937	100
-	.0591	1.5	1/2	.5	12.700	-	1.102	28	4	4.000	101.6
1/16	.0625	1.588	-	.5118	13	1-1/8	1.125	28.575	-	4.331	110
-	.0669	1.7	33/64	.5156	13.097	-	1.142	29	4-1/2	4.500	114.3
-	.075	1.905	17/32	.5326	13.494	-	1.181	30	-	4.724	120
5/64	.0781	1.984	-	.5315	13.5	1-3/16	1.188	30.16	5	5.000	127
-	.0787	2	35/64	.5469	13.891	-	1.221	31	-	5.118	130
-	.0906	2.3	-	.5512	14	1-1/4	1.250	31.75	5-1/2	5.500	139.7
3/32	.0938	2.381	9/16	.5625	14.288	-	1.260	32	-	5.512	140
-	.0984	2.5	-	.571	14.5	-	1.299	33	-	5.906	150
-	.1	2.540	37/64	.5781	14.684	1-5/16	1.312	33.34	6	6.000	152.4
-	.1024	2.6	-	.5906	15	-	1.339	34	-	6.299	160
7/64	.1093	2.776	19/32	.5938	15.081	1-3/8	1.375	34.93	6-1/2	6.500	165.1
-	.1181	3	-	.6	15.240	-	1.378	35	7	7.000	177.8
1/8	.125	3.175	39/64	.6094	15.478	-	1.417	36	-	7.087	180
-	.1378	3.5	-	.6103	15.5	1-7/16	1.438	36.51	7-1/2	7.500	190.5
9/64	.1406	3.572	5/8	.6250	15.875	-	1.457	37	-	7.874	200
5/32	.1563	3.969	-	.6299	16	-	1.496	38	8	8.000	203.2
-	.1575	4	41/64	.6406	16.272	1-1/2	1.500	38.10	8-1/2	8.500	215.8
11/64	.1719	4.366	-	.6496	16.5	-	1.535	39	-	8.661	220
-	.1772	4.5	21/32	.6563	16.669	1-9/16	1.562	39.69	9	9.000	228.6
3/16	.1875	4.763	-	.6693	17	-	1.575	40	-	9.449	240
-	.1969	5	43/64	.6719	17.066	-	1.614	41	9-1/2	9.500	241.3
-	.2	5.080	11/16	.6875	17.463	1-5/8	1.625	41.28	-	9.843	250
13/64	.2031	5.169	-	.6890	17.5	-	1.6544	42	10	10.000	254
-	.2165	5.5	-	.7	17.780	1-11/16	1.688	42.86	-	10.236	260
7/32	.2188	5.558	45/64	.7031	17.859	-	1.693	43	11	11.000	279.4
15/64	.2344	5.953	-	.7087	18	-	1.732	44	-	11.024	280
-	.2362	6	23/32	.7188	18.256	1-3/4	1.750	44.45	-	11.811	300
1/4	.25	6.360	-	.7283	18.5	-	1.772	45	12	12.000	304.8
-	.2559	6.5	47/64	.7344	18.653	-	1.811	46	13	13.000	330.2
17/64	.2656	6.747	-	.7480	19	1-13/46	1.813	46.04	-	13.780	350
-	.2756	7	3/4	.75	19.050	-	1.850	47	14	14.000	355.6
9/32	.2813	7.144	49/64	.7656	19.447	1-7/8	1.875	47.63	15	15.000	381
-	.2953	7.5	-	.7677	19.5	-	1.890	48	-	15.748	400
19/64	.2969	7.541	25/32	.7813	19.844	-	1.929	49	16	16.000	408.4

TX68 COMBINE - BASE UNIT

0.0043(01) CONVERSION CHART (INC-MM)

ссылка	Номер детали	Кол-во	Описание

SECTIONS	**SECTIONS**	**SECCIONES**	**AFSNIT**
SEZIONI	**ABSCHNITTE**	**SECÇÕES**	**SECTIES**

SEC. 1

TX 68

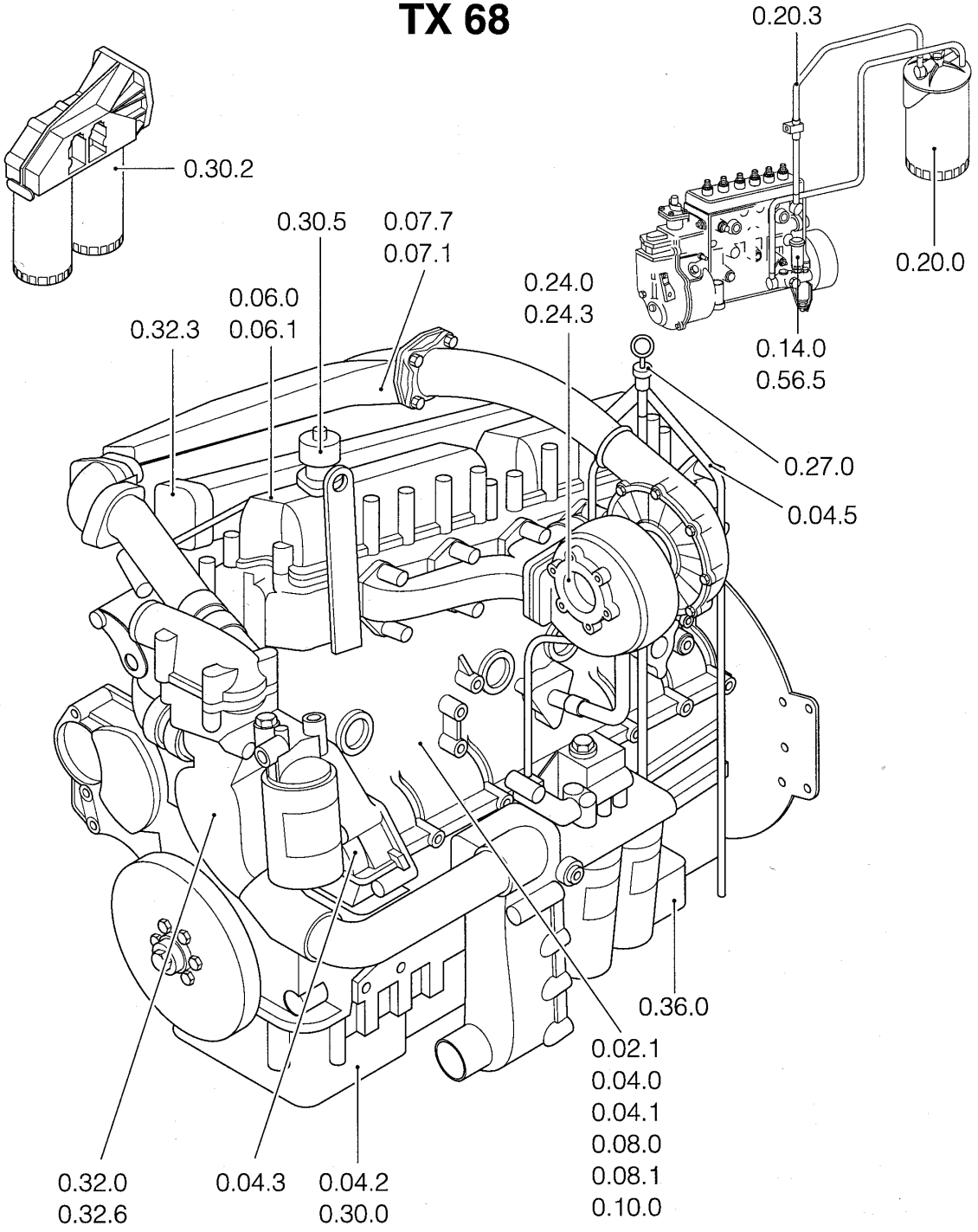

TX68 COMBINE - BASE UNIT

0.01.0(01) SECTION LIST 1 - TX68

ссылка	Номер детали	Кол-во	Описание

0.02.1(01) COMPLETE ENGINE

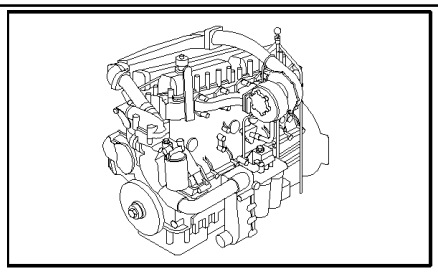

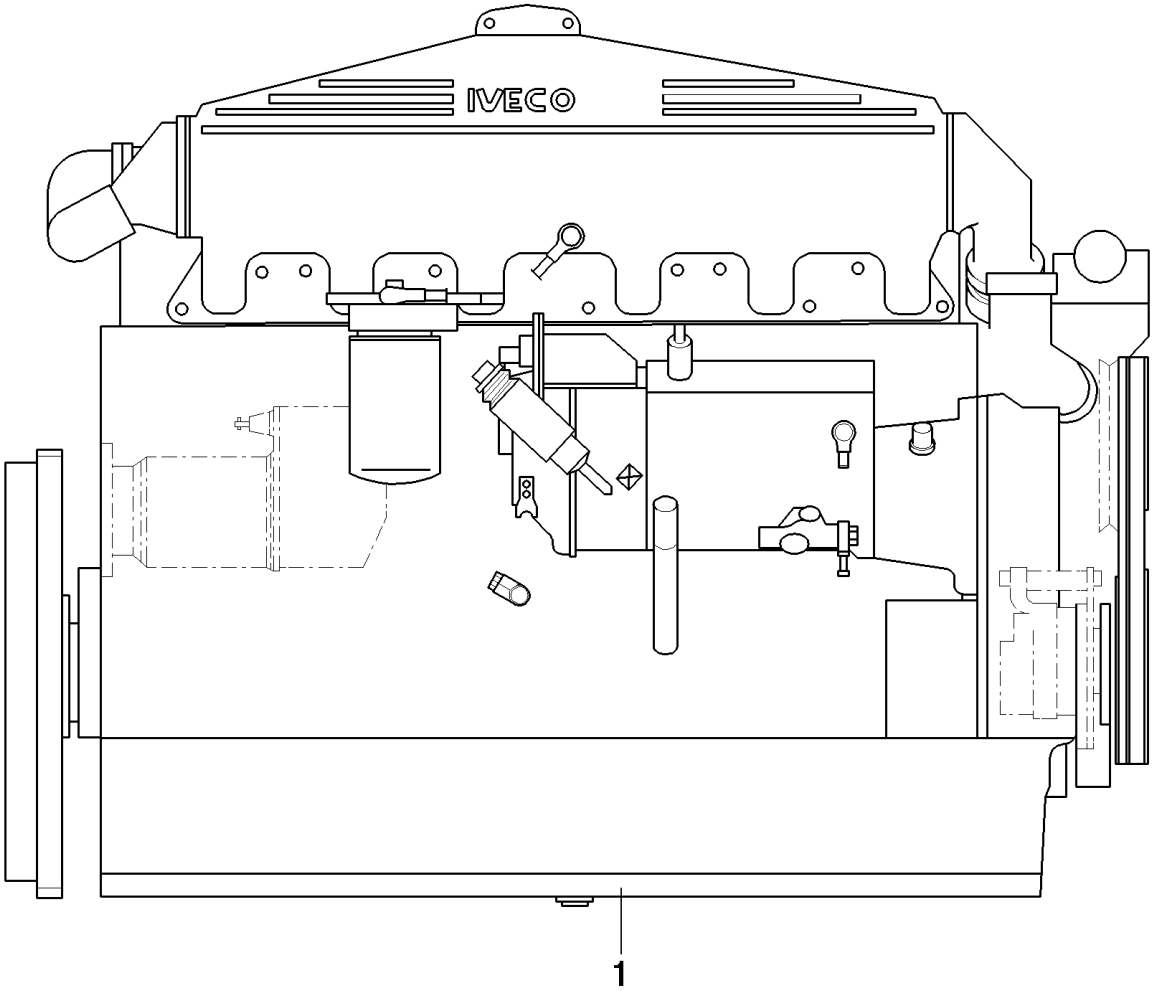

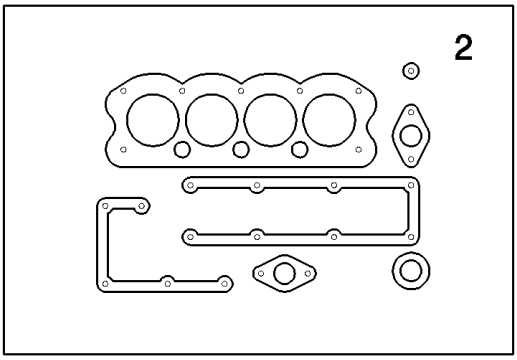

TX68 COMBINE - BASE UNIT

0.02.1(01) COMPLETE ENGINE

ссылка	Номер детали	Кол-во	Описание
1	9832676	1	ENGINE, , NOT FOR TX68PLUS, -C1076
1	87801664	1	ENGINE, , NOT FOR TX68PLUS, NH675 ENGINE, SEE FIGS 00.201 TO 00.224, -C0069
1	87802657	1	ENGINE, , SEE ENGINE MODEL 675 TA/AB AFTER FIGURE 00.301, NOT FOR TX68PLUS, D1246-
1	84036415	1	ENGINE, , FOR TX68PLUS ONLY
2	1940128	1	KIT, ENGINE GASKET, , NOT FOR TX68PLUS, IVECO
2	1940214	1	KIT, ENGINE GASKET, , IVECO, FOR TX68PLUS ONLY
2	1940129	1	KIT, ENGINE TOP GASKETS, , NOT FOR TX68PLUS, IVECO
2	1940213	1	KIT, ENGINE TOP GASKETS, , IVECO, FOR TX68PLUS ONLY

0.04.0(01) CRANKCASE

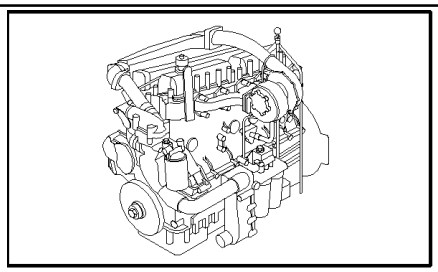

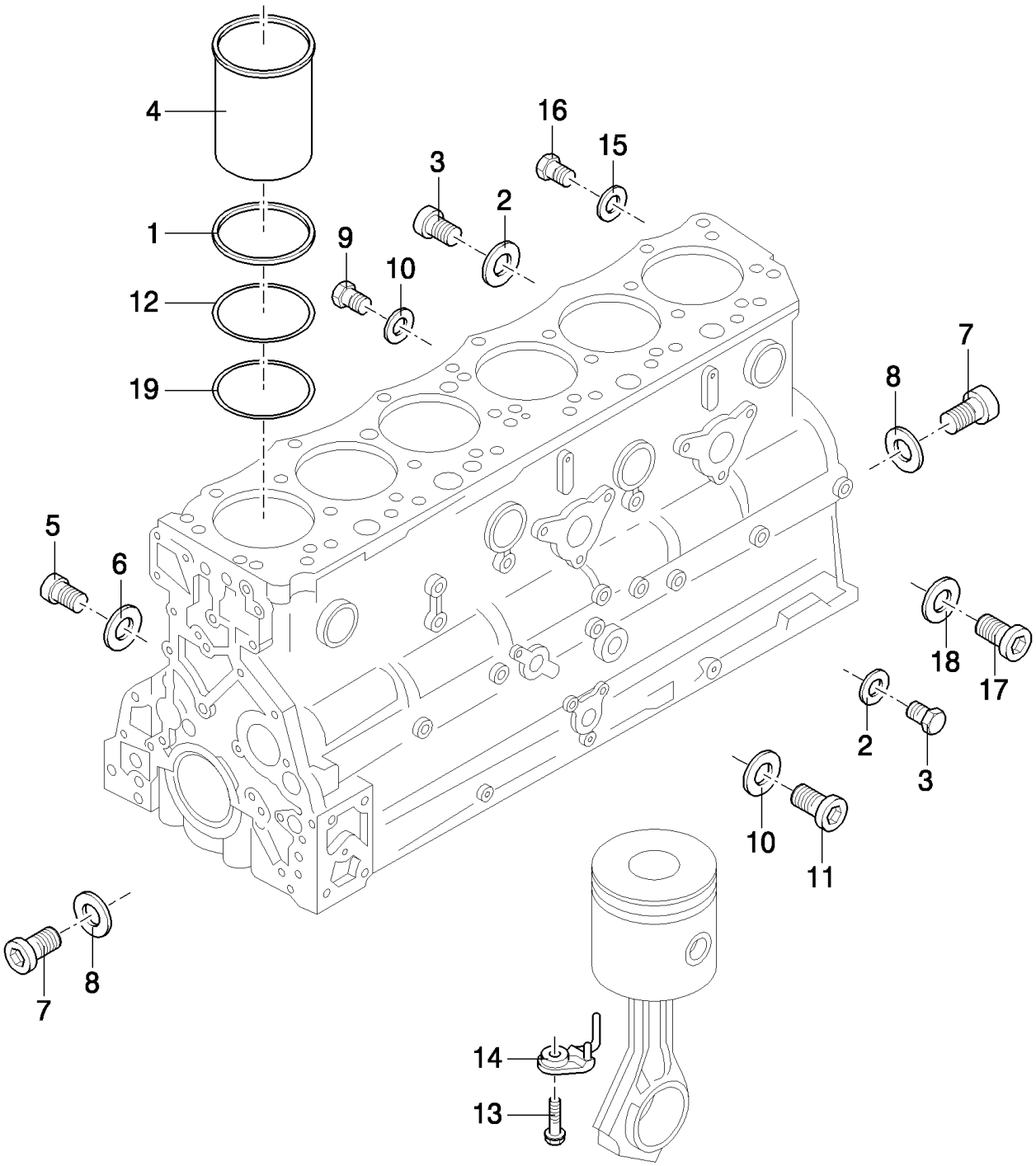

ONLY VALID UNTIL --1076999 (NOT FOR TX68PLUS)

TX68 COMBINE - BASE UNIT

0.04.0(01) CRANKCASE

ссылка	Номер детали	Кол-во	Описание
1	61316747	6	GASKET, THK.:0.008MM
1	61316748	6	GASKET, THK.:0.10MM
1	61316749	6	GASKET, THK.:0.12MM
1	61316793	6	GASKET, THK.:0.14MM
2	98429280	1	GASKET, 20x26x1.5
3	10304911	1	SCREW, M20x1.5
4	61316752	6	LINER, ENGINE CYLINDER, , NOT FOR TX68PLUS
4	2991788	6	LINER, ENGINE CYLINDER, , FOR TX68PLUS ONLY
5	10273111	1	PLUG, M18 x 1.5 x 13, M18x1.5, NOT FOR TX68PLUS
5	500366247	1	PLUG, , FOR TX68PLUS ONLY
6	16508360	1	GASKET, 18x22x1.5
7	10275011	2	PLUG, M22 x 1.5 x 13, , NOT FOR TX68PLUS
7	500366248	2	PLUG, , FOR TX68PLUS ONLY
8	61318888	2	GASKET, 22x29x1.5
9	10300611	1	PLUG, M14 x 1.5 x 14, Cl5.8,
10	2852356	4	SEAL WASHER, 14x18
11	61315014	3	PLUG, M14x1.5, NOT FOR TX68PLUS
11	500366246	3	PLUG, , FOR TX68PLUS ONLY
12	61315083	6	GASKET,
13	61315021	6	BOLT, BANJO,
14	61315952	6	CONNECTOR, HYD.,
15	10265460	1	GASKET, 49x42x1.5
16	4665029	1	PLUG, M42x1.5
17	10278301	1	PLUG, M28 x 1.5 x 11, Brass,
18	10296260	1	WASHER, SEALING, M28.4 x 36 x 1.5,
19	61315083	6	GASKET, , FOR ENGINE TYPE 8460 SRI 10 00 A 007
19	61321115	6	GASKET, , FOR ENGINE TYPE 8465 SRI 10 00 A 001, FOR TX68PLUS ONLY

ONLY VALID UNTIL --1076999 (NOT FOR TX68PLUS)

0.04.0(02) CRANKCASE

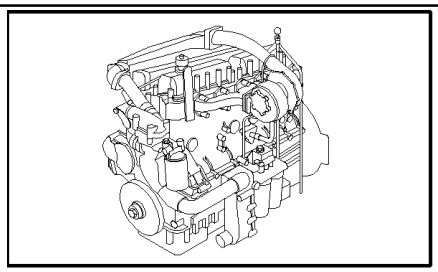

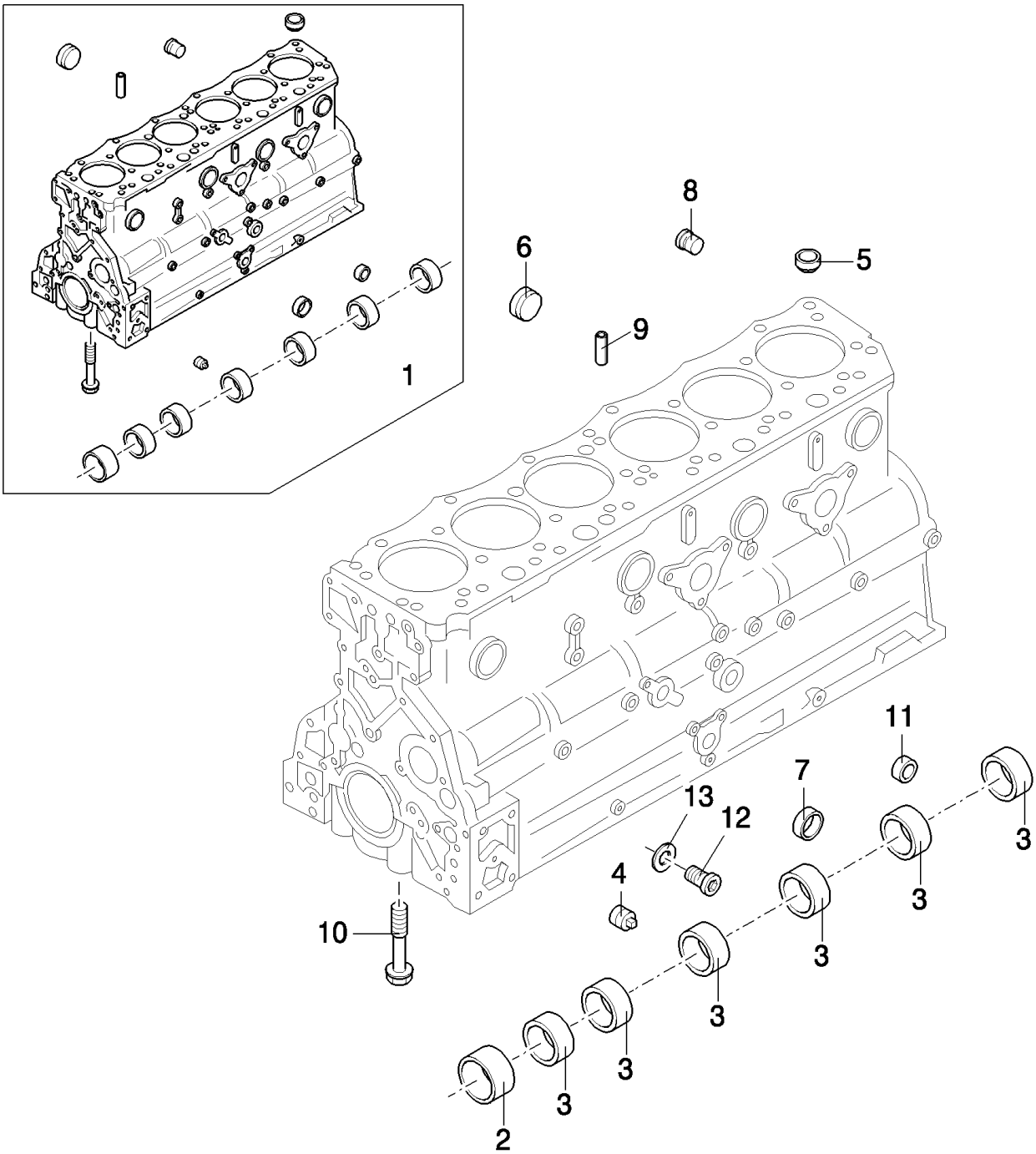

ONLY VALID UNTIL --1076999 (NOT FOR TX68PLUS)

TX68 COMBINE - BASE UNIT

0.04.0(02) CRANKCASE

ссылка	Номер детали	Кол-во	Описание
1	61320884	1	CYLINDER BLOCK, , FOR ENGINE TYPE 8460 SRI 10 00 A 007
1	61321549	1	CYLINDER BLOCK, , FOR ENGINE TYPE 8465 SRI 10 00 A 001, FOR TX68PLUS ONLY
2	61317181	1	BUSHING,
3	61317180	6	BUSHING,
4	16997411	1	PLUG, , NOT FOR TX68PLUS
4	99434268	1	PLUG, M16x1.5, FOR TX68PLUS ONLY
5	16991170	4	PLUG, DIA.:36
6	14282870	1	PLUG, M40, Tapered, Stainless, DIA.:40
7	14282970	1	PLUG, M45, Tapered, Stainless,
8	61319492	7	PLUG,
9	14612670	4	PIN, ROLL,
10	61315570	2	SCREW, L:167MM
10	61315554	12	SCREW, L:149MM
11	16991470	3	PLUG,
12	10300811	1	PLUG, M18 x 1.5 x 14, Cl5.8,
13	4858610	1	GASKET, 18x24x1.5

ONLY VALID UNTIL --1076999 (NOT FOR TX68PLUS)

0.04.2(01) OIL SUMP

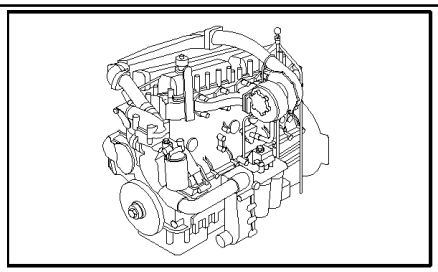

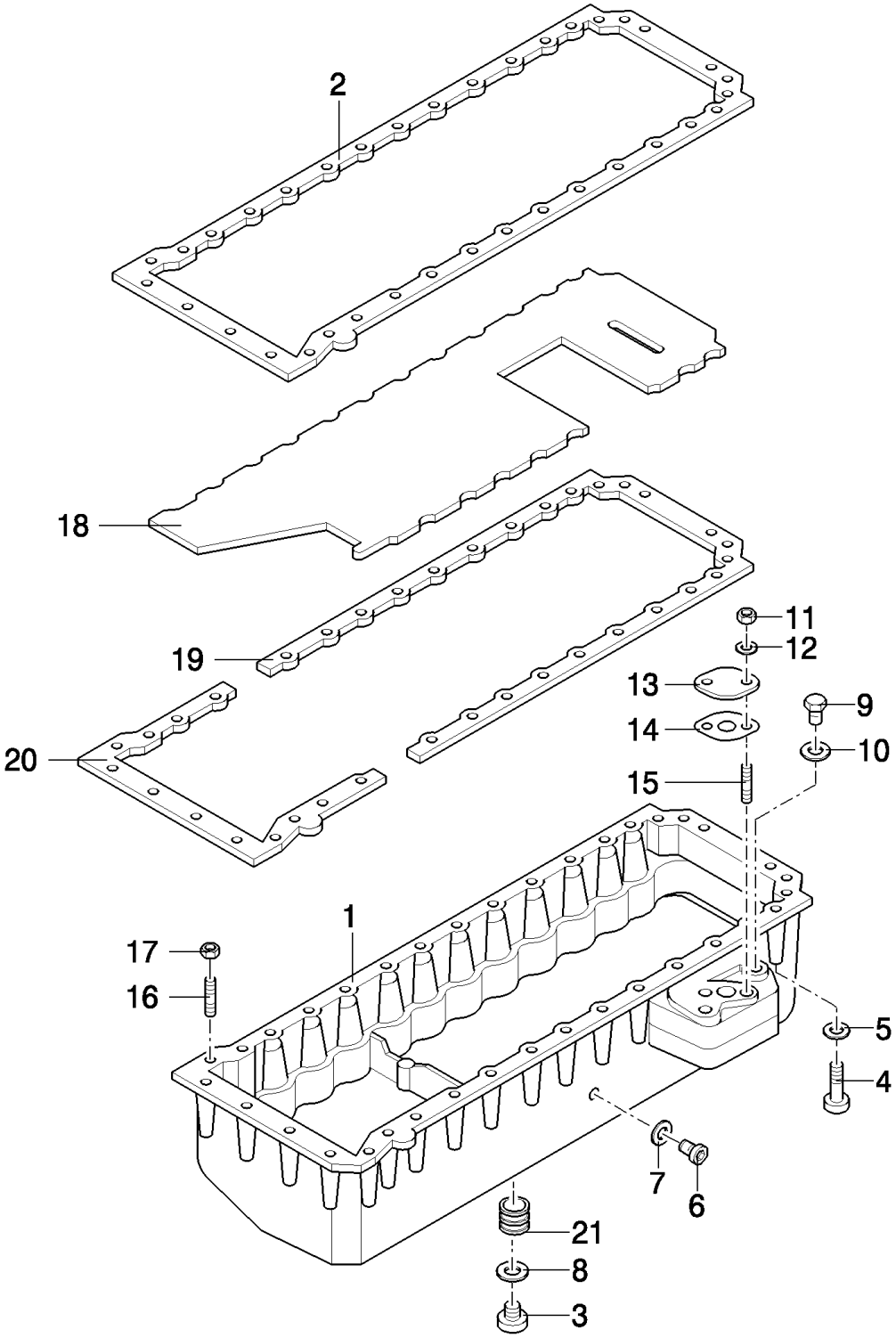

ONLY VALID UNTIL --1076999 (NOT FOR TX68PLUS)

TX68 COMBINE - BASE UNIT

0.04.2(01) OIL SUMP

ссылка	Номер детали	Кол-во	Описание
1	61317732	1	PAN, ENGINE OIL,
2	61319083	1	GASKET,
3	10275311	1	PLUG, M22 x 1.5 x 19,
4	11307024	18	BOLT, Hex, M10 x 1.25 x 40, 8.8, Full Thd,
4	15971521	16	BOLT, Hex, M10 x 1.25 x 85, 8.8,
4	15972931	2	BOLT, Hex, M10 x 1.25 x 160, 10.9,
5	12601471	36	WASHER, M10
6	10300714	1	PLUG, M16 x 1.5 x 14,
7	4858609	1	O-RING, 16x22x1.5
8	16508460	2	GASKET, 22x27x1.5
9	10273111	1	PLUG, M18 x 1.5 x 13, M18x1.5, NOT FOR TX68PLUS
9	500366247	1	PLUG, , FOR TX68PLUS ONLY
10	10508360	1	GASKET, , FOR TX68PLUS ONLY, FOR ENGINE TYPE 8460 SRI 10 00 A 007
10	16508360	1	GASKET, , FOR ENGINE TYPE 8465 SRI 10 00 A 001
11	16100811	2	NUT, M8, Cl 8, , FOR ENGINE TYPE 8460 SRI 10 00 A 007
11	16100821	2	NUT, M8, Cl 10, , FOR ENGINE TYPE 8465 SRI 10 00 A 001, FOR TX68PLUS ONLY
12	11190474	2	WASHER, LOCK, , FOR ENGINE TYPE 8460 SRI 10 00 A 007
12	11194079	2	WASHER, SPRING, Belleville, M8.4, , FOR ENGINE TYPE 8465 SRI 10 00 A 001, FOR TX68PLUS ONLY
13	4798805	1	COVER,
14	4864034	1	GASKET,
15	13543321	2	STUD,
16	13540921	15	STUD,
17	14048121	15	NUT, LOCK, M6 x 1, Cl 8,
18	61319531	1	DEFLECTOR, , FOR TX68PLUS ONLY, FOR ENGINE TYPE 8465 SRI 10 00 A 001
19	61316094	1	GASKET, , FOR ENGINE TYPE 8465 SRI 10 00 A 001, FOR TX68PLUS ONLY
20	61316095	1	GASKET, , FOR TX68PLUS ONLY, FOR ENGINE TYPE 8465 SRI 10 00 A 001
21	61318267	2	BUSHING, , FOR TX68PLUS ONLY

ONLY VALID UNTIL --1076999 (NOT FOR TX68PLUS)

0.04.3(01) ENGINE COVERS & GASKETS

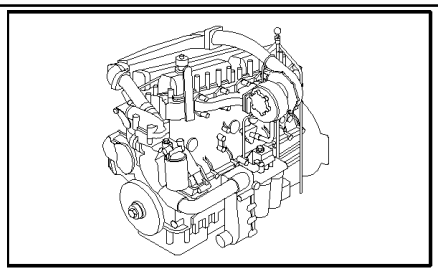

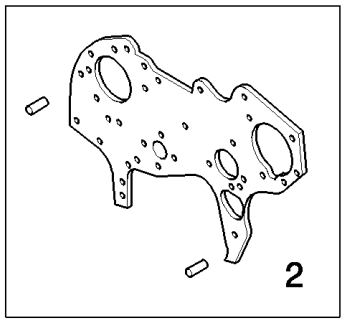

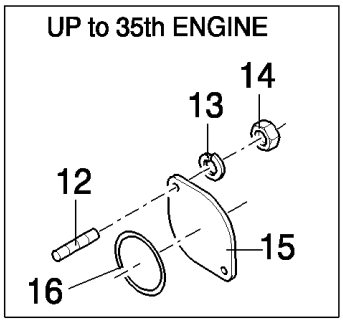

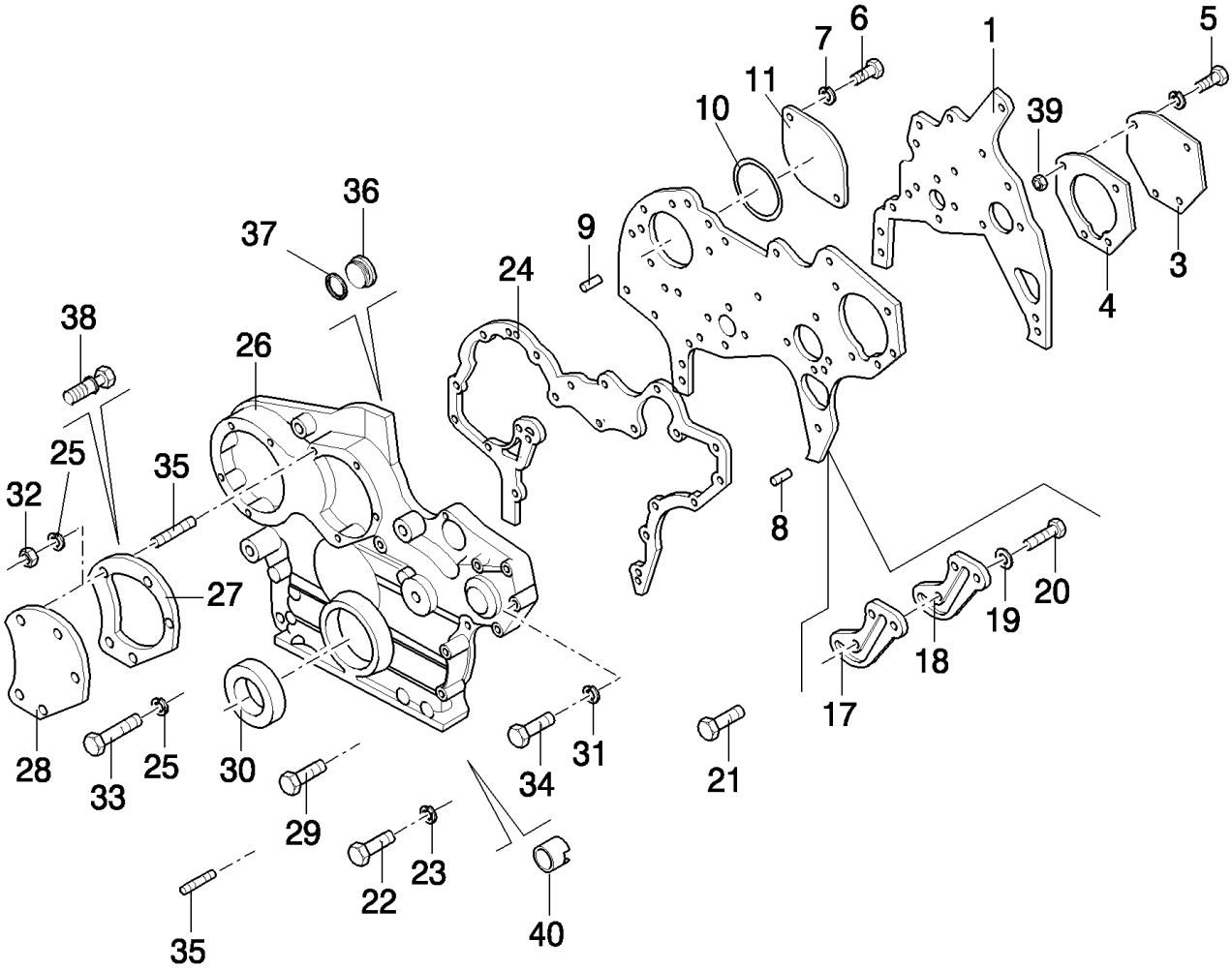

TX68 COMBINE - BASE UNIT

0.04.3(01) ENGINE COVERS & GASKETS

ссылка	Номер детали	Кол-во	Описание
1	61319059	1	GASKET,
2	61318546	1	PLATE,
3	61583713	1	PLATE,
4	61319045	1	GASKET,
5	15888724	1	BOLT, Hex, M10 x 1.25 x 55, 8.8,
5	16605524	1	SCREW, M10x65
5	15972021	3	BOLT, Hex, M10 x 1.25 x 110, 8.8, M10x100
6	16043824	1	BOLT, Hex, M8 x 30, 8.8, Full Thd,
7	11193874	1	WASHER, SPRING, Belleville, M8.4,
8	61316841	1	DOWEL,
9	61316840	1	DOWEL,
10	61318654	1	ELEMENT, SEALING, , FOR TX68PLUS ONLY, FOR ENGINE TYPE 8460 SRI 10 00 A 007
11	8016615	1	COVER, , FOR ENGINE TYPE 8460 SRI 10 00 A 007
11	61321552	1	COVER, , FOR TX68PLUS ONLY
12	13449521	2	STUD,
13	11190574	2	WASHER, SPRING, Belleville, M10.5,
14	12164721	2	NUT, M10 x 1.25, Cl 10,
15	8011444	1	COVER,
16	4862313	1	ELEMENT, SEALING,
17	61315071	1	FLANGE,
18	61319044	1	GASKET,
19	61316021	2	WASHER, LOCK,
20	61584442	2	SCREW,
21	61584440	1	SCREW,
22	16043424	2	SCREW, Hex, M8 x 20, 8.8, Full Thd,
22	16043624	1	BOLT, Hex, M8 x 25, 8.8, Full Thd,
23	11193874	2	WASHER, SPRING, Belleville, M8.4, , NOT FOR TX68PLUS
23	11194079	2	WASHER, SPRING, Belleville, M8.4, , FOR TX68PLUS ONLY
24	61319058	1	GASKET,
25	17089574	10	WASHER, SEALING, , NOT FOR TX68PLUS
25	11194079	4	WASHER, SPRING, Belleville, M8.4, , FOR TX68PLUS ONLY
26	61319092	1	COVER, , NOT FOR TX68PLUS
26	61319090	1	COVER, , FOR TX68PLUS ONLY
27	61319061	1	GASKET,
28	61317134	1	COVER,
29	16605524	1	SCREW, M10x65, NOT FOR TX68PLUS
29	16043624	1	BOLT, Hex, M8 x 25, 8.8, Full Thd, , FOR TX68PLUS ONLY
30	98467211	1	GASKET,
31	17090274	2	WASHER, LOCK, , NOT FOR TX68PLUS
31	11198374	2	WASHER, SPRING, Belleville, M10.5, , FOR TX68PLUS ONLY
32	17042531	5	NUT,
33	16045024	8	BOLT, Hex, M8 x 90, 8.8,
34	16044721	2	BOLT, Hex, M8 x 75, 8.8,
35	13543321	5	STUD, M8x16x20

ONLY VALID UNTIL --1076999 (NOT FOR TX68PLUS)

TX68 COMBINE - BASE UNIT

0.04.3(01) ENGINE COVERS & GASKETS

ссылка	Номер детали	Кол-во	Описание
35	13547024	1	STUD, M10x20x55
35	13546521	1	STUD, M10x20x30
36	500366246	1	PLUG, M14x1.5, FOR TX68PLUS ONLY
37	2852356	1	SEAL WASHER, , FOR TX68PLUS ONLY
38	61315661	1	SCREW, , FOR TX68PLUS ONLY
39	12164721	3	NUT, M10 x 1.25, Cl 10, , FOR TX68PLUS ONLY
40	13582371	8	INSERT, THREADED, , FOR TX68PLUS ONLY
40	13526170	4	INSERT, THREADED, , FOR TX68PLUS ONLY
40	13525870	5	SCREW, , FOR TX68PLUS ONLY

ONLY VALID UNTIL --1076999 (NOT FOR TX68PLUS)

0.04.3(02) ENGINE COVERS & GASKETS

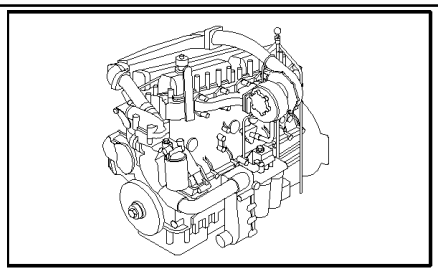

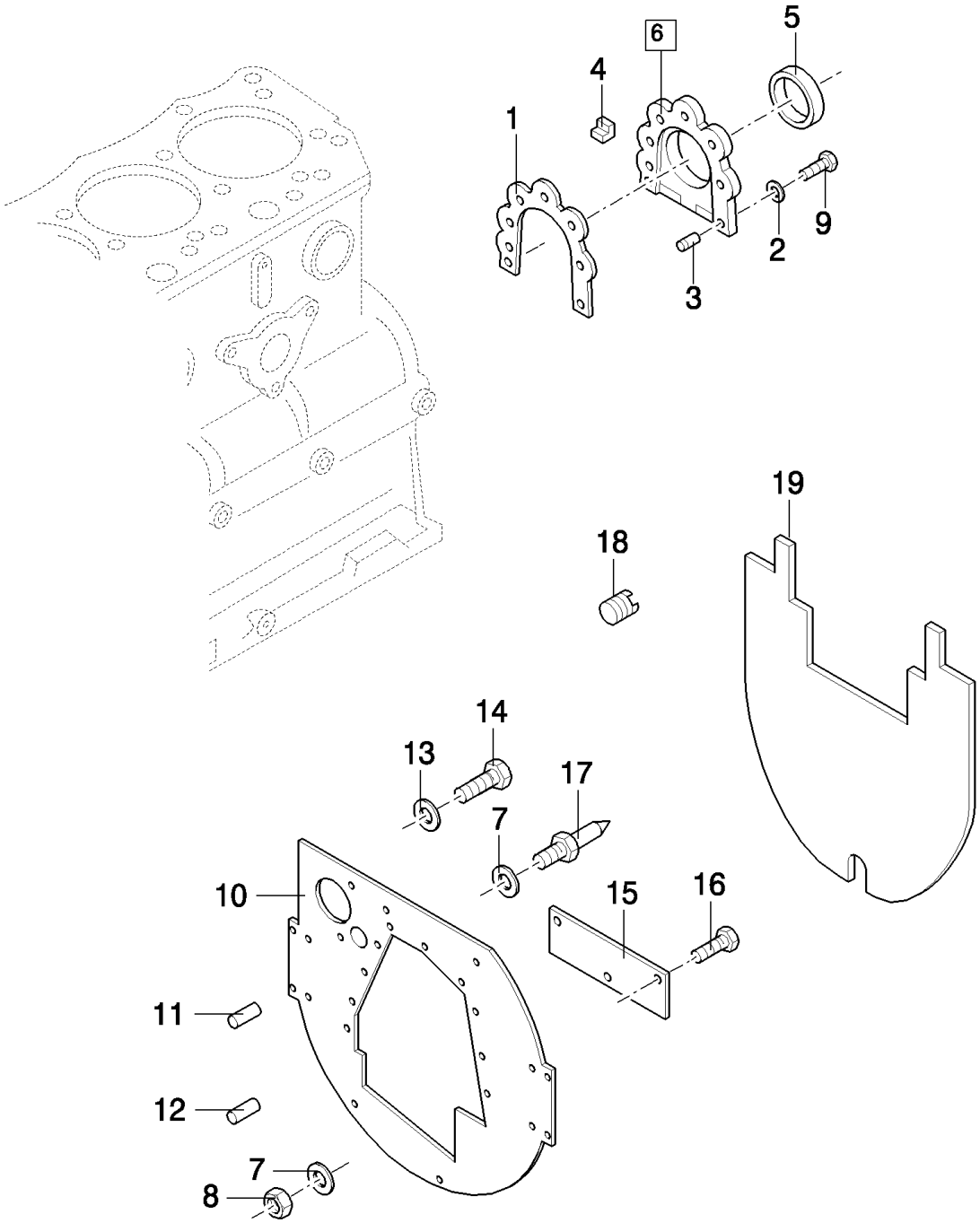

ONLY VALID UNTIL --1076999 (NOT FOR TX68PLUS)

TX68 COMBINE - BASE UNIT

0.04.3(02) ENGINE COVERS & GASKETS

ссылка	Номер детали	Кол-во	Описание
1	61319046	1	GASKET,
2	11194079	7	WASHER, SPRING, Belleville, M8.4,
3	61577156	1	DOWEL,
4	61581074	1	DOWEL,
5	40101471	1	GASKET, , FOR ENGINE TYPE 8460 SRI 10 00 A 007
5	98499171	1	GASKET, , FOR ENGINE TYPE 8465 SRI 10 00 A 001
5	99471245	1	GASKET, , FOR TX68PLUS ONLY
6	61672682	1	COVER, (3,4)
7	11197774	4	WASHER, SPRING, Belleville, M6.4,
8	15896221	3	NUT, M6, Cl 10,
9	16043624	7	BOLT, Hex, M8 x 25, 8.8, Full Thd,
10	8017234	1	PLATE, , FOR ENGINE TYPE 8460 SRI 10 00 A 007
10	61321551	1	PLATE, , FOR TX68PLUS ONLY
11	61316846	1	DOWEL,
12	61316847	1	DOWEL,
13	61229230	12	WASHER,
14	11408331	12	BOLT, Hex, M14 x 1.5 x 35, 10.9, Full Thd,
15	8018103	1	COVER, , FOR ENGINE TYPE 8460 SRI 10 00 A 007
16	10902424	3	BOLT, Hex, M6 x 20, 8.8, Full Thd, , FOR ENGINE TYPE 8460 SRI 10 00 A 007
17	4827218	1	OPERATOR TIMING REF/INDE,
18	13582371	1	INSERT, THREADED, , FOR TX68PLUS ONLY
19	61321553	1	PLATE, , FOR TX68PLUS ONLY

ONLY VALID UNTIL --1076999 (NOT FOR TX68PLUS)

0.04.5(01) ENGINE BREATHERS

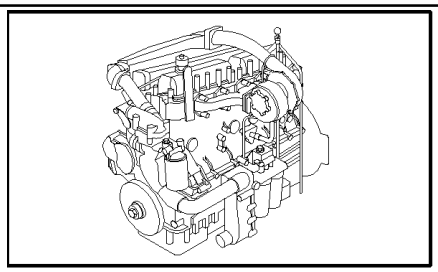

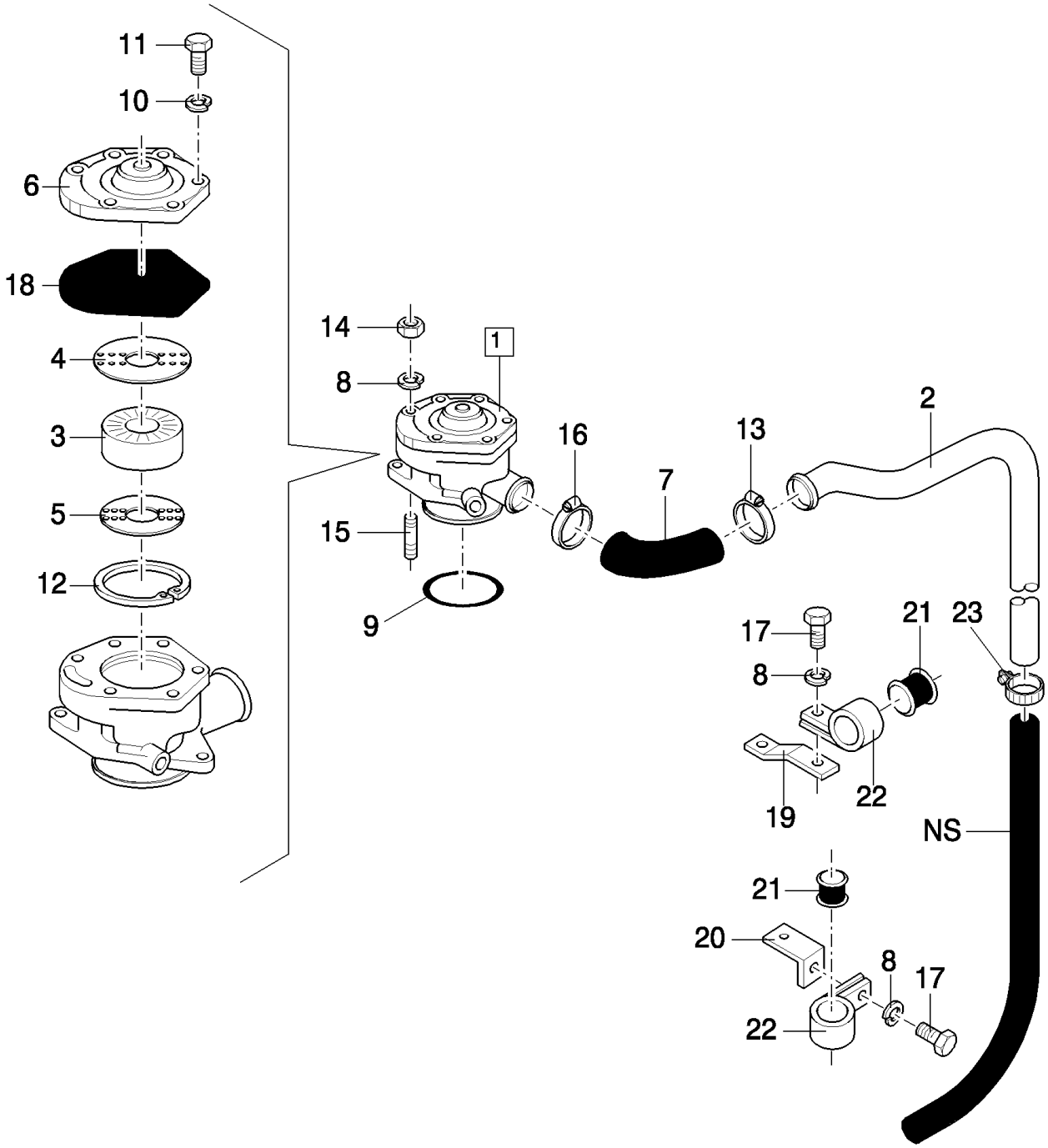

ONLY VALID UNTIL --1076999 (NOT FOR TX68PLUS)

TX68 COMBINE - BASE UNIT

0.04.5(01) ENGINE BREATHERS

ссылка	Номер детали	Кол-во	Описание
1	61320347	1	BREATHER, (3 to 6,9 to 12,18)
2	8015896	1	TUBE, RIGID, , NOT FOR TX68PLUS
2	61321556	1	TUBE, RIGID, , FOR TX68PLUS ONLY
3	4771079	1	FILTER, ELEMENT,
4	4771080	1	PLATE, BASE,
5	4771081	1	PLATE, BASE,
6	4771075	1	COVER, , NOT FOR TX68PLUS
7	61319112	1	HOSE, , FOR ENGINE TYPE 8460 SRI 10 00 A 007
7	61321189	1	HOSE, , FOR ENGINE TYPE 8465 SRI 10 00 A 001, FOR TX68PLUS ONLY
8	11193874	4	WASHER, SPRING, Belleville, M8.4,
9	14464281	1	O-RING, -224, Cl 7, 1.734" ID x .139" Thk,
10	14496404	6	WASHER, LOCK, , NOT FOR TX68PLUS
10	17094714	6	WASHER, LOCK, , FOR TX68PLUS ONLY
11	10902824	6	BOLT, Hex, M6 x 30, 8.8,
12	11062176	1	RING, SNAP, M85, Int,
13	13000490	1	CLAMP, HOSE, , FOR ENGINE TYPE 8460 SRI 10 00 A 007
13	98463348	1	CLIP, HOSE, , FOR ENGINE TYPE 8465 SRI 10 00 A 001, FOR TX68PLUS ONLY
14	16100811	2	NUT, M8, Cl 8, , NOT FOR TX68PLUS
15	13543321	2	STUD, , NOT FOR TX68PLUS
16	13000490	1	CLAMP, HOSE, , FOR ENGINE TYPE 8460 SRI 10 00 A 007
16	98463349	1	CLIP, HOSE, , FOR ENGINE TYPE 8465 SRI 10 00 A 001
18	61320345	1	GASKET,
19	8107203	1	BRACKET, , NOT FOR TX68PLUS
19	61321557	1	PLATE, COVER, , FOR TX68PLUS ONLY
20	8110294	1	BRACKET, , NOT FOR TX68PLUS
20	61321558	1	PLATE, COVER, , FOR TX68PLUS ONLY
21	4747140	2	PAD,
22	4810595	2	COLLAR, RETAINER,
23	326082	1	CLAMP, , NOT FOR TX68PLUS
17	16043224	2	BOLT, Hex, M8 x 16, 8.8, Full Thd,

ONLY VALID UNTIL --1076999 (NOT FOR TX68PLUS)

0.06.0(01) CYLINDER HEAD - COVERS

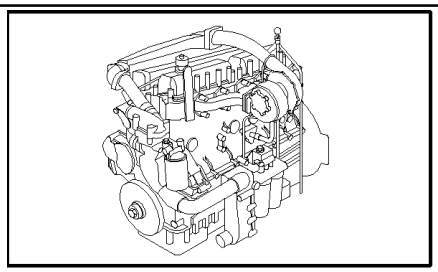

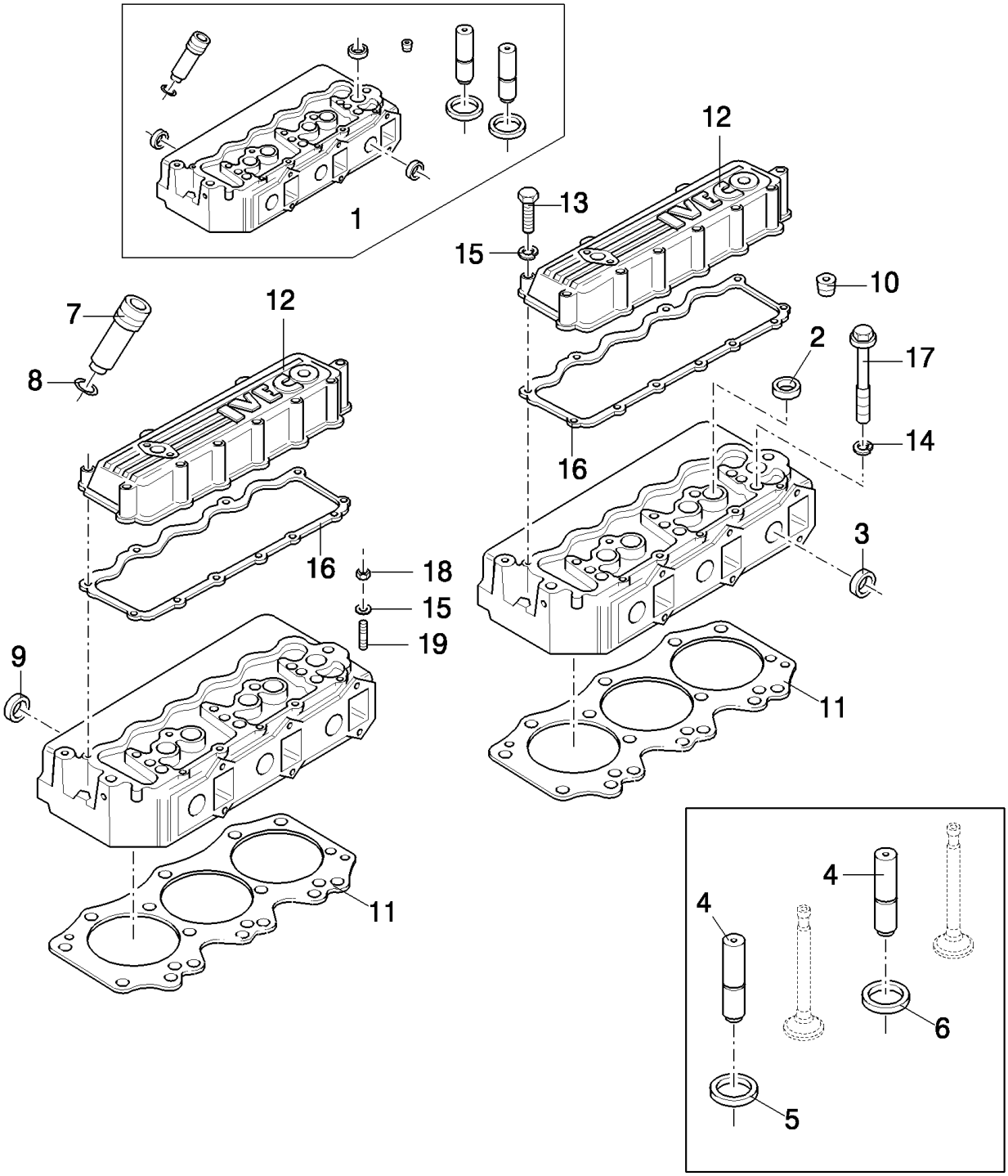

ONLY VALID UNTIL --1076999 (NOT FOR TX68PLUS)

TX68 COMBINE - BASE UNIT

0.06.0(01) CYLINDER HEAD - COVERS

ссылка	Номер детали	Кол-во	Описание
1	61320064	2	CYLINDER HEAD, , NOT FOR TX68PLUS
1	500336912	2	CYLINDER HEAD, , FOR TX68PLUS ONLY
2	14282470	18	PLUG, M28, Tapered, Stainless,
3	14282670	6	PLUG, M32, Tapered, Stainless,
4	61585072	12	GUIDE, VALVE, EXHAUST, DIA.:8.9
4	61577137	12	GUIDE, VALVE, DIA.:8.5
4	61689487	12	VALVE, INLET, OVERSIZE, DIA.:16.2
5	61315085	6	VALVE SEAT, , NOT FOR TX68PLUS
5	500310811	6	VALVE SEAT, , FOR TX68PLUS ONLY
6	61315368	6	VALVE SEAT, , NOT FOR TX68PLUS
6	500310810	6	VALVE SEAT, , FOR TX68PLUS ONLY
7	61315088	6	SLEEVE,
8	61582822	6	O-RING,
9	61584412	2	PLUG, , NOT FOR TX68PLUS
9	500367988	2	PLUG, , FOR TX68PLUS ONLY
10	14326101	2	PLUG, , NOT FOR TX68PLUS
10	500376561	2	PLUG, , FOR TX68PLUS ONLY
11	61319085	2	GASKET, CYLINDER HEAD,
12	61316819	2	COVER,
13	16045024	10	BOLT, Hex, M8 x 90, 8.8,
14	61315656	28	WASHER,
15	11193874	22	WASHER, SPRING, Belleville, M8.4,
16	61319394	2	GASKET,
17	4815557	28	SCREW,
18	16100821	4	NUT, M8, Cl 10, , FOR TX68PLUS ONLY
19	13543321	4	STUD, , FOR TX68PLUS ONLY
13	16044321	12	BOLT, Hex, M8 x 55, 8.8,

ONLY VALID UNTIL --1076999 (NOT FOR TX68PLUS)

0.06.1(01) CYLINDER HEAD - COVERS

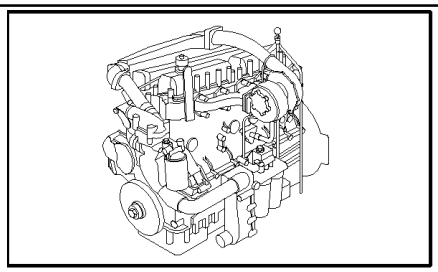

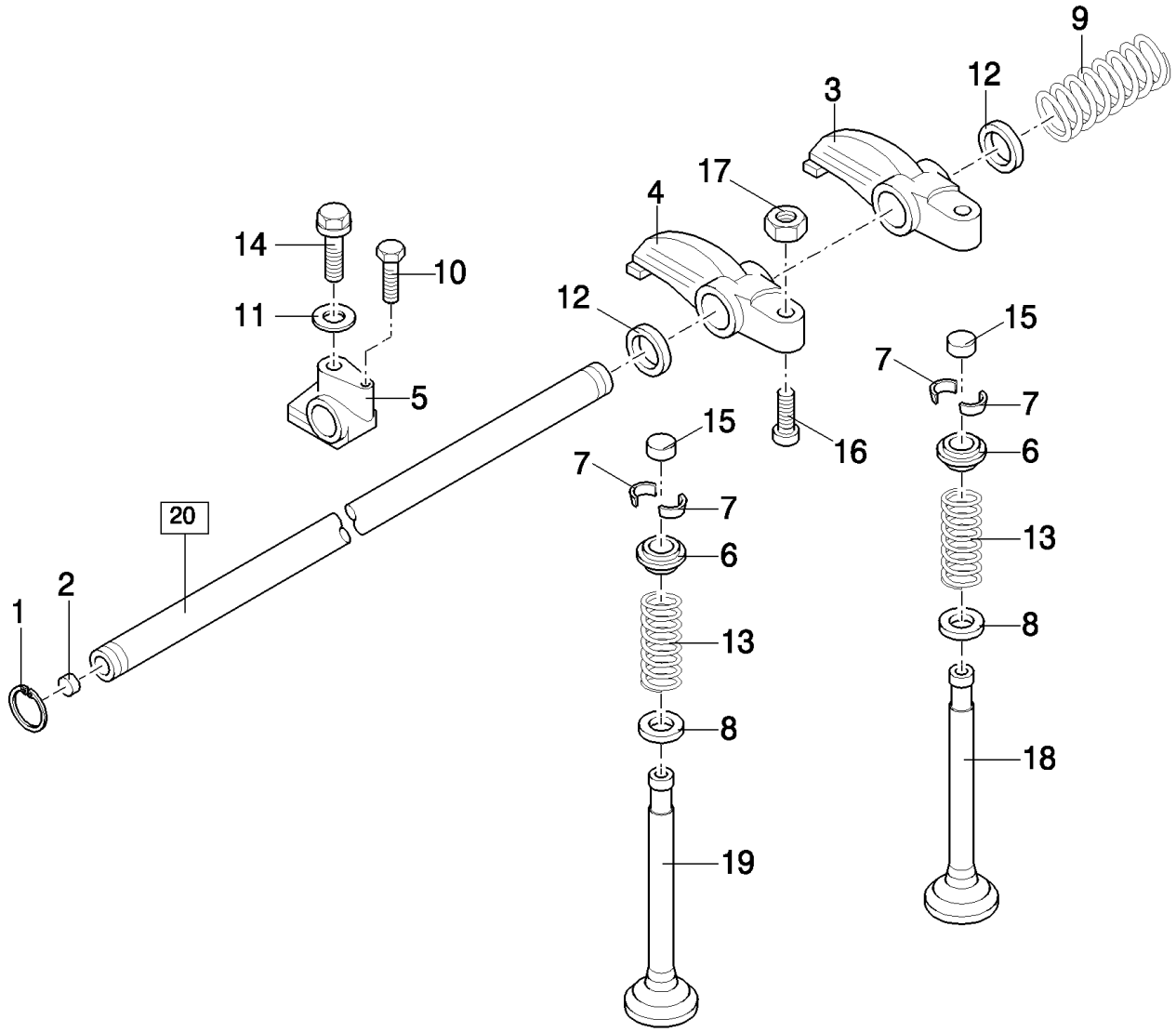

ONLY VALID UNTIL --1076999 (NOT FOR TX68PLUS)

TX68 COMBINE - BASE UNIT

0.06.1(01) CYLINDER HEAD - COVERS

ссылка	Номер детали	Кол-во	Описание
1	11067276	2	RING, SNAP, M24, Ext,
2	14328501	2	PLUG, M16, Tapered,
3	61315099	6	ROCKER ARM,
4	61315100	6	ROCKER ARM,
5	61315977	6	SUPPORT,
6	61316198	12	CUP,
7	61577211	24	COTTER, ROCKER ARM,
8	61577212	12	SPACER,
9	61577214	4	SPRING,
10	61577283	4	SCREW,
11	61317063	12	WASHER,
12	61581230	12	WASHER,
13	61316197	12	SPRING,
14	61316738	12	SCREW,
15	61316052	12	CAP, FLANGE COVER,
16	4786841	12	SCREW,
17	61584377	12	NUT,
18	61320865	6	VALVE, ENGINE, INLET, STD,
19	61315973	6	VALVE, ENG EXHAUST, STD,
20	61320081	2	SHAFT, (2)

ONLY VALID UNTIL --1076999 (NOT FOR TX68PLUS)

0.07.1(01) INTAKE MANIFOLD (NOT FOR TX68PLUS)

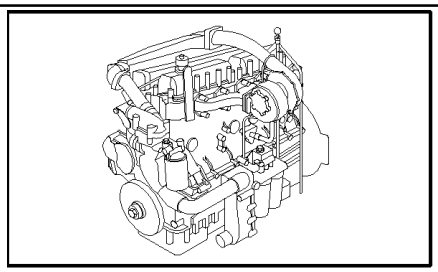

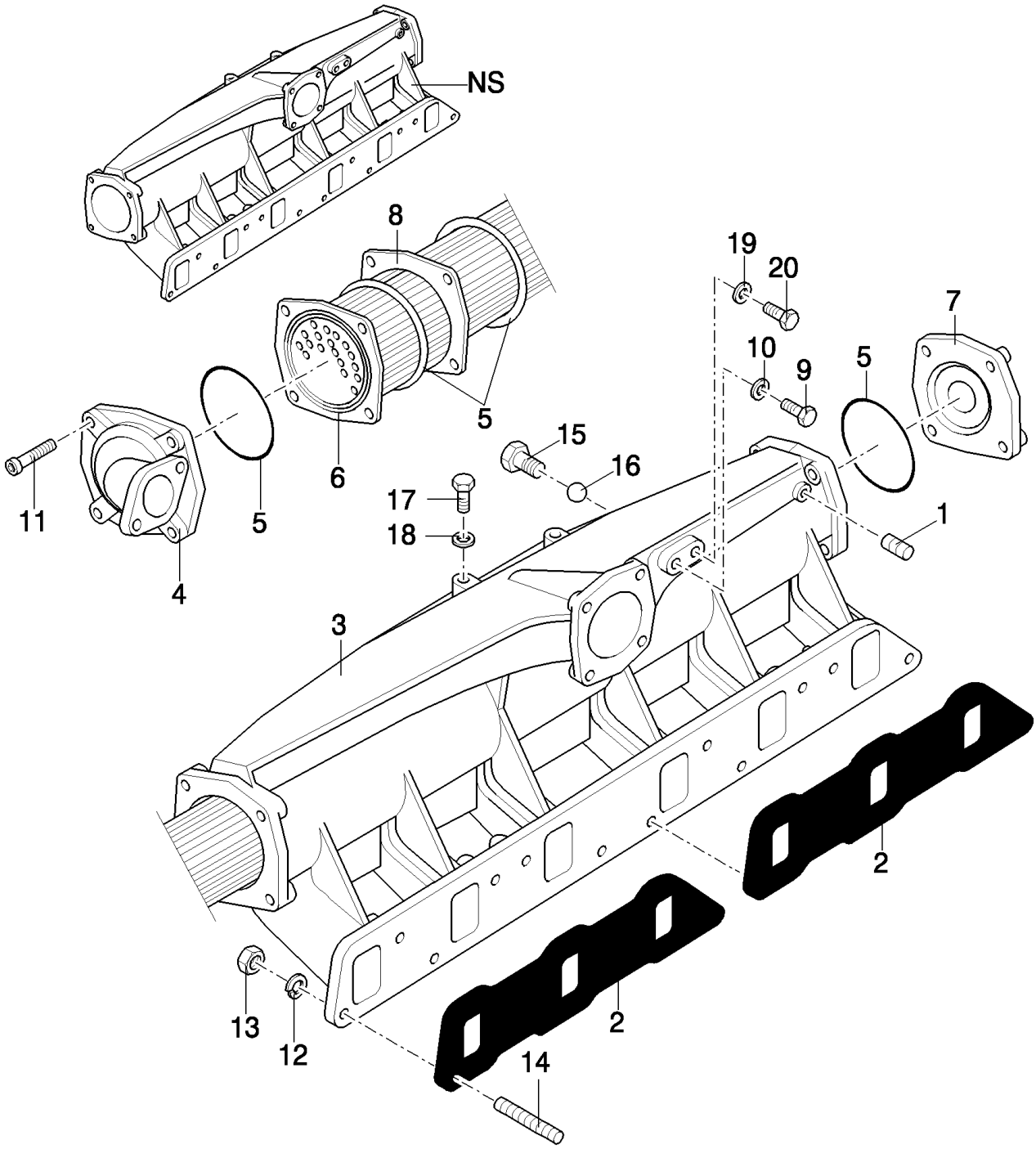

ONLY VALID UNTIL --1076999

TX68 COMBINE - BASE UNIT

0.07.1(01) INTAKE MANIFOLD (NOT FOR TX68PLUS)

ссылка	Номер детали	Кол-во	Описание
1	16996011	1	PLUG,
2	61317233	2	GASKET,
3	8012453	1	MANIFOLD, INLET,
4	8016829	1	COVER,
5	14466581	4	O-RING, -247, Cl 7, 4.609" ID x .139" Thk,
6	8016622	1	HEAT EXCHANGER,
7	8016618	1	COVER,
8	8012457	1	SPACER,
9	10300811	1	PLUG, M18 x 1.5 x 14, Cl5.8,
10	4858610	1	GASKET,
11	16690724	8	SCREW,
12	11198374	12	WASHER, SPRING, Belleville, M10.5,
13	12164721	13	NUT, M10 x 1.25, Cl 10,
14	13449724	2	STUD, M10x30
14	13953821	4	STUD, M10x120
15	8017599	4	PLUG,
16	8017600	4	BALL,
17	4595833	2	PLUG,
18	98429280	2	GASKET,
19	2854292	1	SEAL WASHER,
20	16992211	1	PLUG,

ONLY VALID UNTIL --1076999

0.07.1/1(01) INTAKE MANIFOLD - TX68PLUS

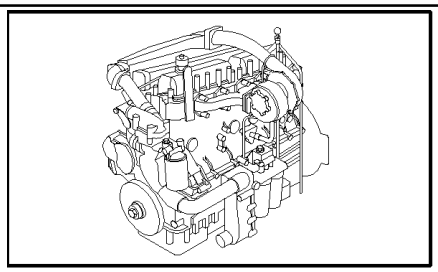

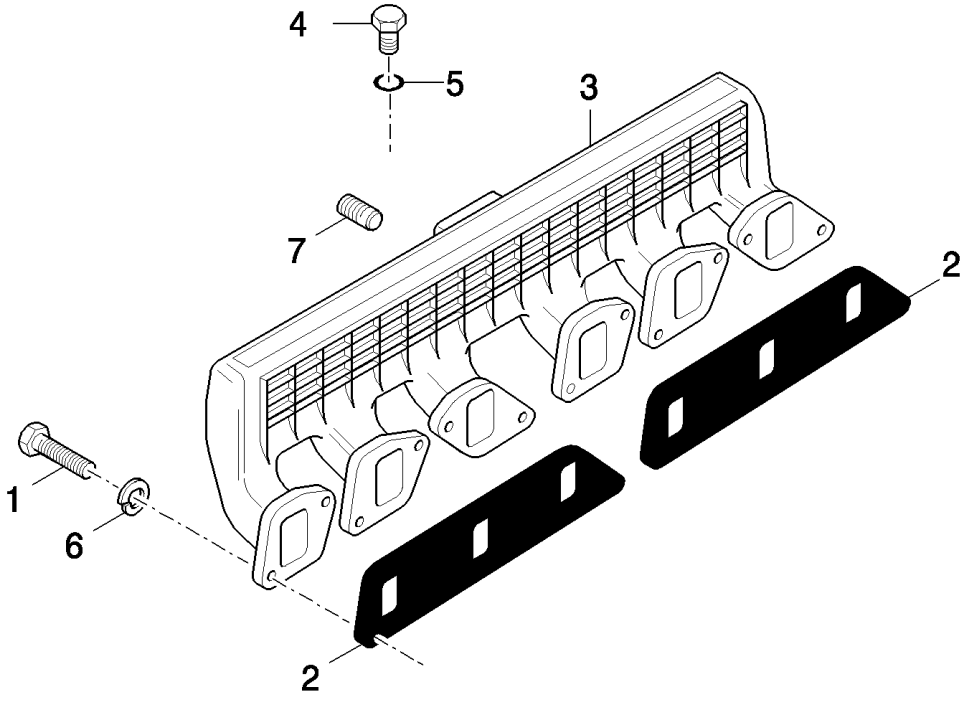

TX68 COMBINE - BASE UNIT

0.07.1/1(01) INTAKE MANIFOLD - TX68PLUS

ссылка	Номер детали	Кол-во	Описание
1	15972424	4	BOLT, Hex, M10 x 1.25 x 130, 8.8,
1	15973221	2	SCREW, M10x120
2	61321089	2	GASKET,
3	61321093	1	MANIFOLD, INLET,
4	4595833	1	PLUG,
5	98429280	1	GASKET,
6	11198374	12	WASHER, SPRING, Belleville, M10.5,
7	17849870	1	INSERT,
1	11234724	6	SCREW, Hex, M10 x 1.25 x 45, 8.8,

0.07.7(01) EXHAUST MANIFOLD (NOT FOR TX68PLUS)

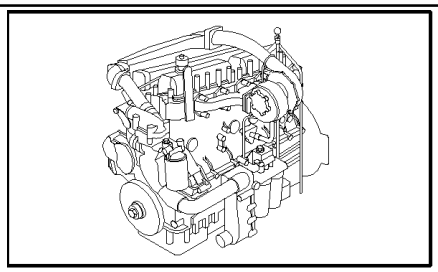

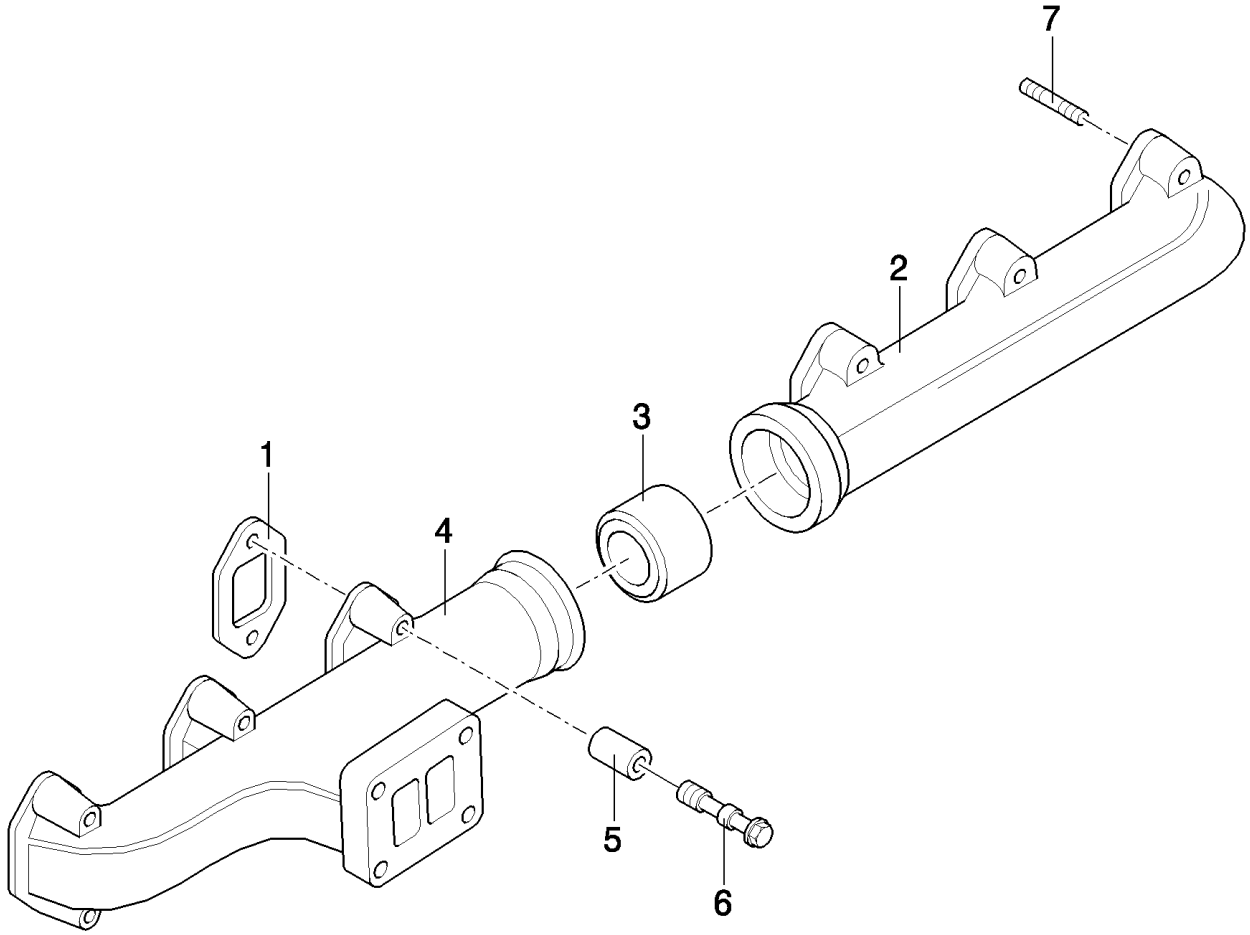

ONLY VALID UNTIL --1076999

TX68 COMBINE - BASE UNIT

0.07.7(01) EXHAUST MANIFOLD (NOT FOR TX68PLUS)

ссылка	Номер детали	Кол-во	Описание
1	61319208	6	GASKET,
2	61319398	1	MANIFOLD, EXHAUST,
3	61319399	1	RING,
4	61318477	1	MANIFOLD, EXHAUST,
5	61586118	12	SPACER,
6	98490937	12	SCREW,
7	61321158	1	STUD, M10x15x22

ONLY VALID UNTIL --1076999

0.07.7/1(01) EXHAUST MANIFOLD - TX68PLUS

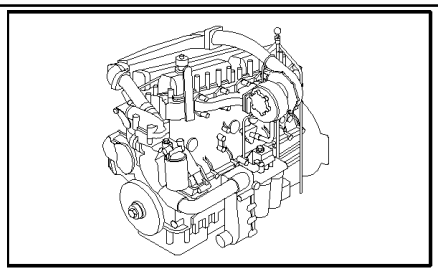

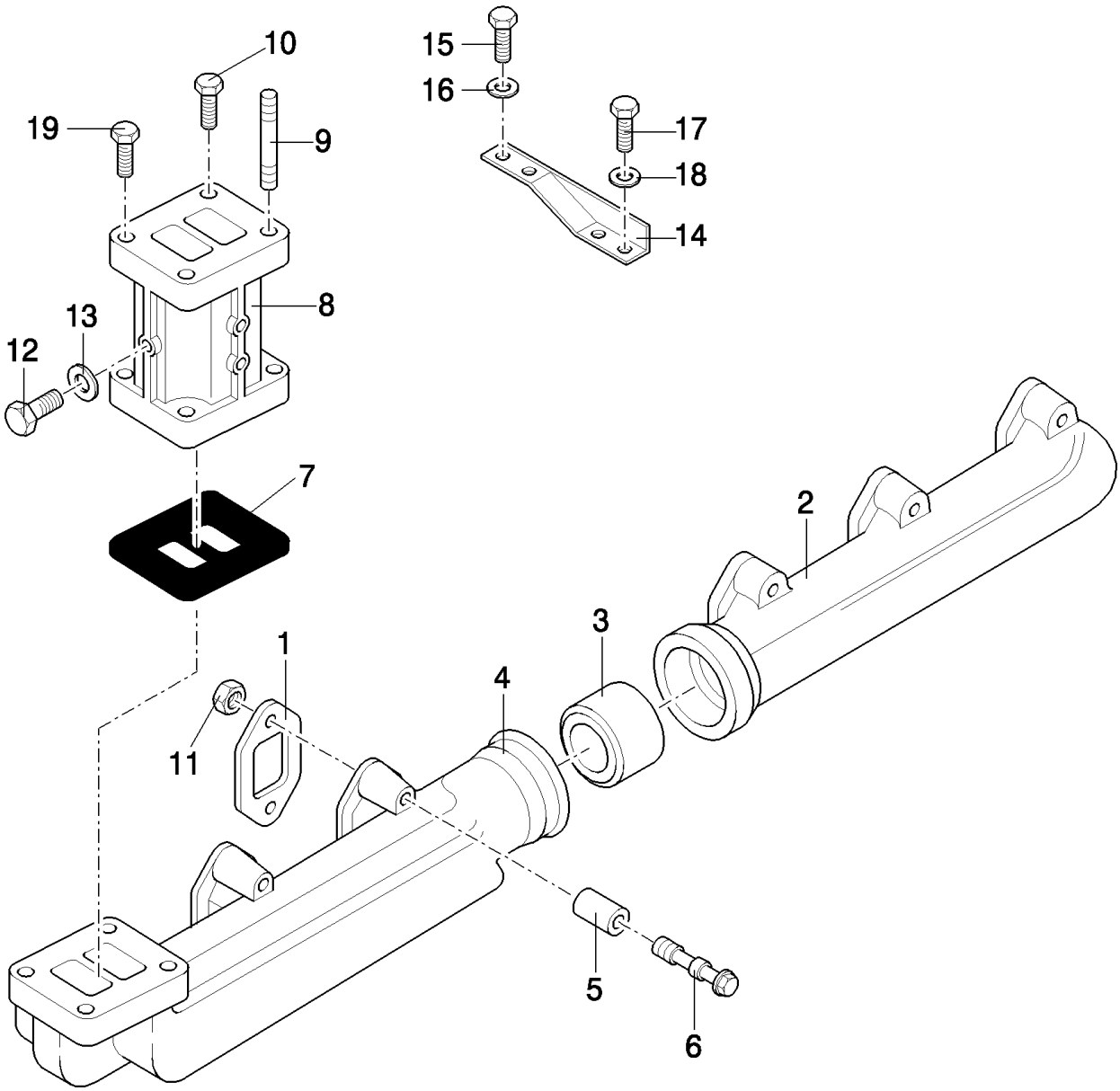

TX68 COMBINE - BASE UNIT

0.07.7/1(01) EXHAUST MANIFOLD - TX68PLUS

ссылка	Номер детали	Кол-во	Описание
1	61319208	6	GASKET,
2	61320854	1	MANIFOLD, EXHAUST,
3	61320873	1	RING,
4	61320855	1	MANIFOLD, EXHAUST,
5	61586118	12	SPACER,
6	98492238	12	SCREW,
7	61317796	1	GASKET,
8	8016171	1	SPACER,
9	61321158	2	STUD,
10	500382135	1	SCREW,
11	13680121	4	NUT,
12	16992211	2	PLUG,
13	2854292	2	SEAL WASHER,
14	8016172	1	BRACKET,
15	15540321	2	BOLT, Hex, M12 x 1.25 x 25, 8.8, Full Thd,
16	11190774	2	WASHER, SPRING, Belleville, M13,
17	15970724	2	SCREW, Hex, M10 x 1.25 x 25, 8.8, Full Thd,
18	11190574	2	WASHER, SPRING, Belleville, M10.5,
19	98492163	1	SCREW,

0.08.0(01) MAIN BEARING SET - THRUST RING SET - ROD BEARING SET

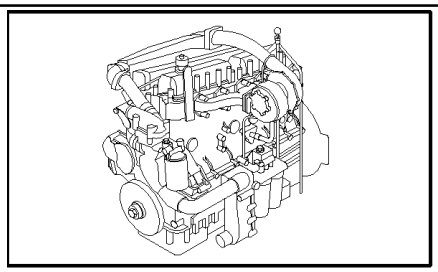

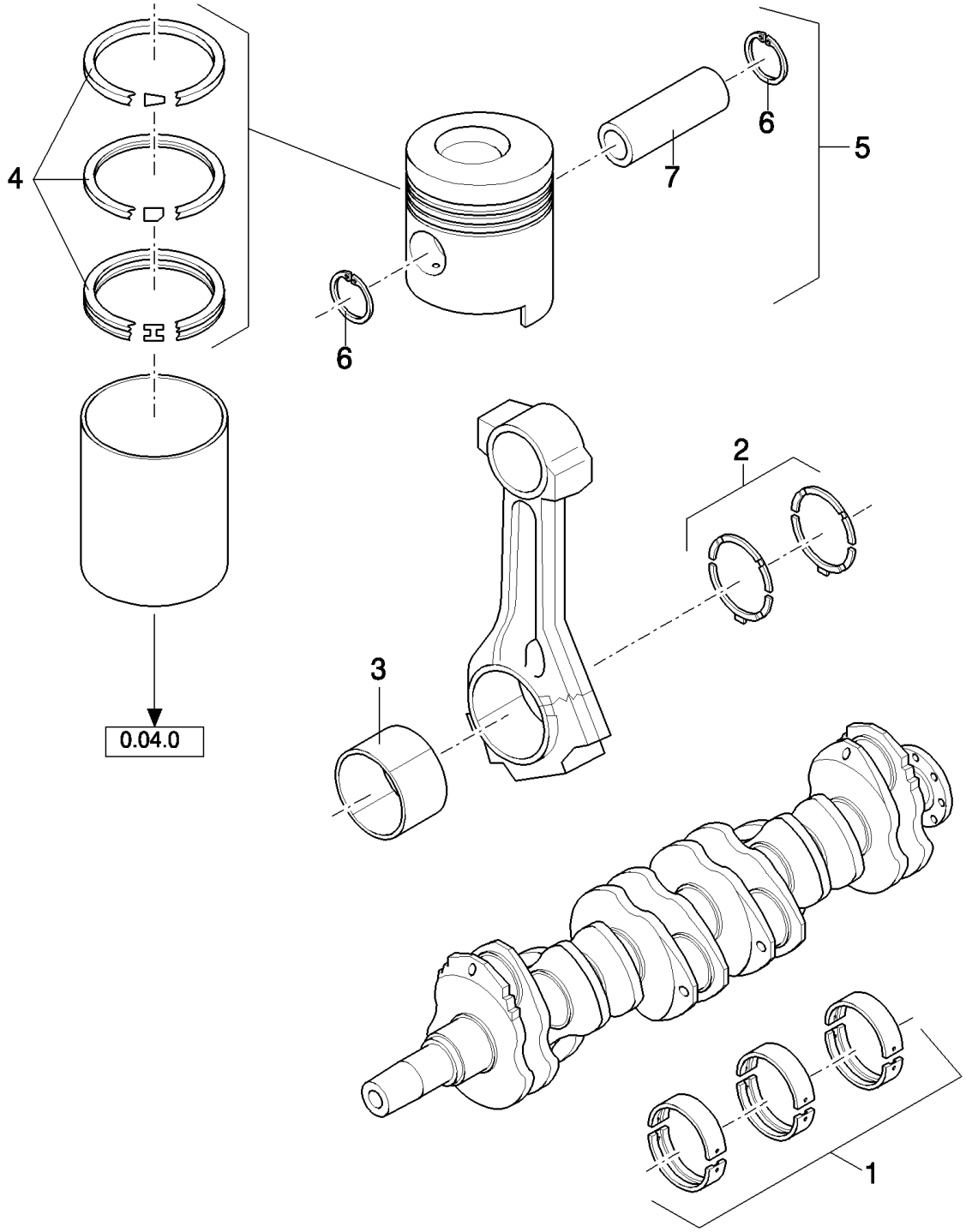

ONLY VALID UNTIL --1076999 (NOT FOR TX68PLUS)

TX68 COMBINE - BASE UNIT

0.08.0(01) MAIN BEARING SET - THRUST RING SET - ROD BEARING SET

ссылка	Номер детали	Кол-во	Описание
1	1908947	1	SET OF MAIN BRGS.STD,
1	2991739	1	SET, CONN ROD BRGS (STD), -0.127
1	1908948	1	SET OF MAIN BRGS -0.254,
1	1908949	1	SET OF MAIN BRGS -0.508mm,
2	1902562	1	SET, THRUST WASHERS (STD),
2	1902563	1	SET, THRUST WASHERS+0.102,
2	1902564	1	SET, THRUST WASHERS +0.25,
2	1902565	1	SET,THRUST WASHERS +0.508,
3	1908950	6	SET OF MAIN BRGS.STD,
3	2991740	6	SET OF MAIN BRGS.STD, -0.127
3	1908951	6	SET OF MAIN BRGS -0.254,
3	1908952	6	SET OF MAIN BRGS -0.508mm,
4	61318623	6	SET OF RINGS, , NOT FOR TX68PLUS
4	2991564	6	SET OF RINGS, , FOR TX68PLUS ONLY
5	61318794	6	PISTON ASSY., (4,6,7), NOT FOR TX68PLUS
5	2991571	6	PISTON ASSY., (4,6,7), FOR TX68PLUS ONLY
6	61315197	12	RING, LOCKING,
7	61317978	6	PIN, PISTON, , FOR ENGINE TYPE 8460 SRI 10 00 A 007
7	61315196	6	PIN, PISTON, , FOR ENGINE TYPE 8465 SRI 10 00 A 001, FOR TX68PLUS ONLY

ONLY VALID UNTIL --1076999 (NOT FOR TX68PLUS)

0.08.1(01) FLYWHEEL - VIBRATION DAMPER - CRANKSHAFT - CONNECTING RODS

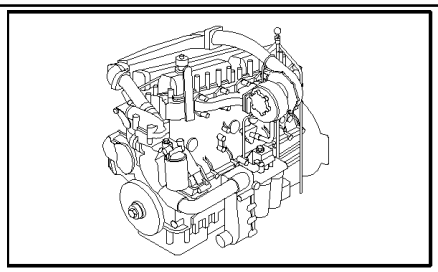

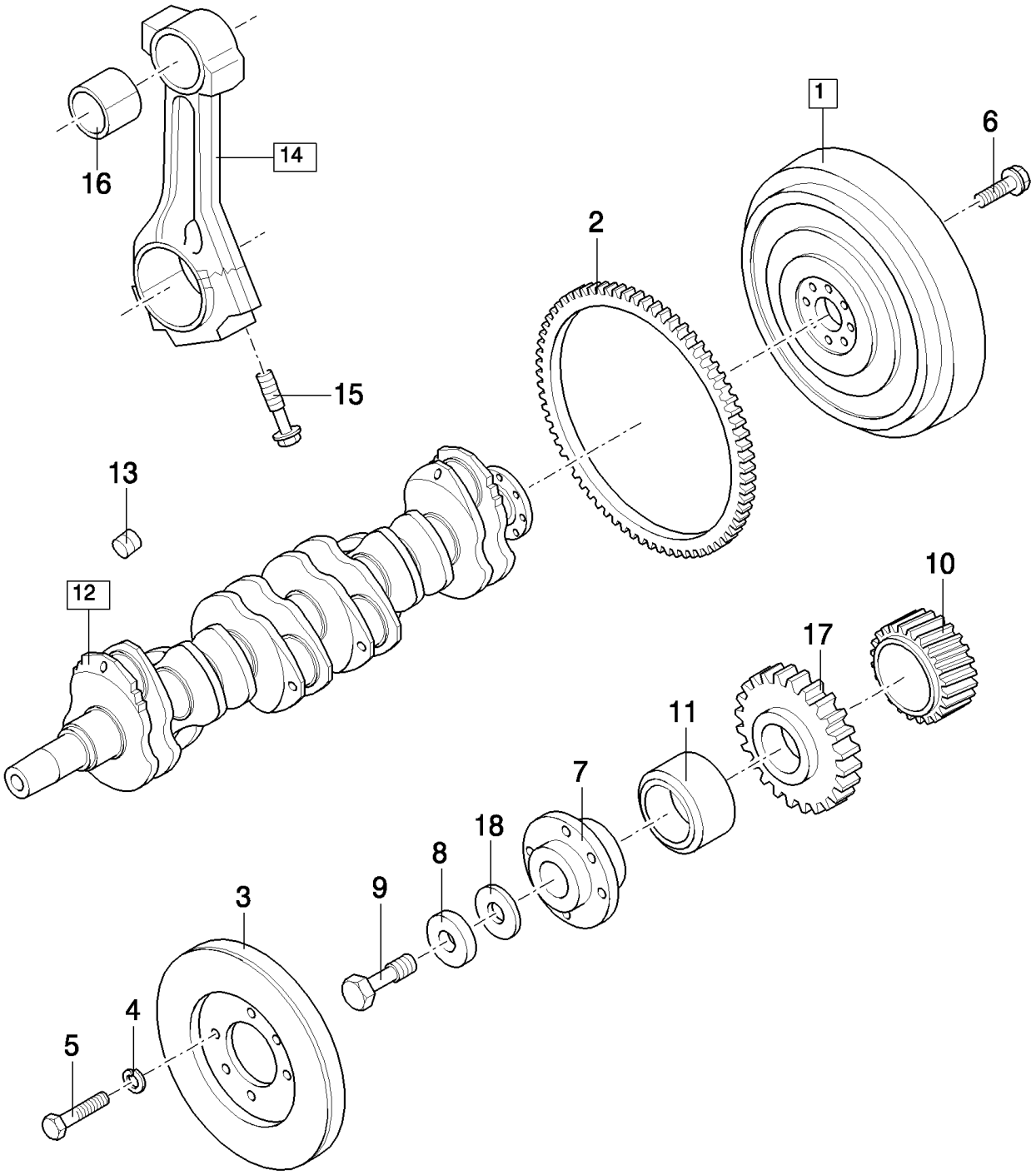

ONLY VALID UNTIL --1076999 (NOT FOR TX68PLUS)

TX68 COMBINE - BASE UNIT

0.08.1(01) FLYWHEEL - VIBRATION DAMPER - CRANKSHAFT - CONNECTING RODS

ссылка	Номер детали	Кол-во	Описание
1	8015907	1	FLYWHEEL, BALER, (2), FOR ENGINE TYPE 8460 SRI 10 00 A 007
1	61321562	1	FLYWHEEL, ENGINE, (2), FOR ENGINE TYPE 8465 SRI 10 00 A 001
1	500338111	1	FLYWHEEL, ENGINE, (2), FOR TX68PLUS ONLY
2	61578844	1	GEAR, RING, , FOR ENGINE TYPE 8460 SRI 10 00 A 007
2	4672334	1	GEAR, RING, , FOR ENGINE TYPE 8465 SRI 10 00 A 001, FOR TX68PLUS ONLY
3	61316389	1	DAMPER,
4	11198673	6	WASHER, LOCK, M12
5	15540424	6	BOLT, Hex, M12 x 1.25 x 30, 8.8, Full Thd, , FOR TX68PLUS ONLY, FOR ENGINE TYPE 8460 SRI 10 00 A 007
6	4765554	8	SCREW,
7	61317126	1	HUB,
8	61577278	1	WASHER,
9	61317125	1	SCREW,
10	61316216	1	GEAR, DRIVING,
11	61316775	1	BUSHING,
12	61318243	1	CRANKSHAFT, (10,11,13,17)
13	61577322	6	PLUG, , NOT FOR TX68PLUS
14	61319082	6	ROD, CONNECTING, (15,16)
15	61315181	12	SCREW,
16	61317845	6	BUSHING,
17	61318596	1	GEAR,
18	61316071	1	WASHER,
5	15540624	6	BOLT, Hex, M12 x 1.25 x 40, 8.8, Full Thd, , FOR ENGINE TYPE 8465 SRI 10 00 A 001

ONLY VALID UNTIL --1076999 (NOT FOR TX68PLUS)

0.10.0(01) TIMING PARTS - GEAR DRIVE

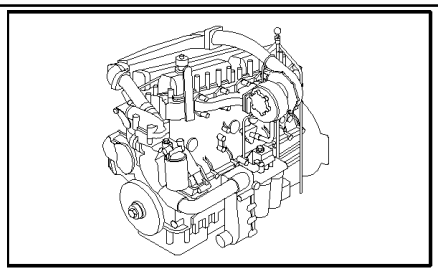

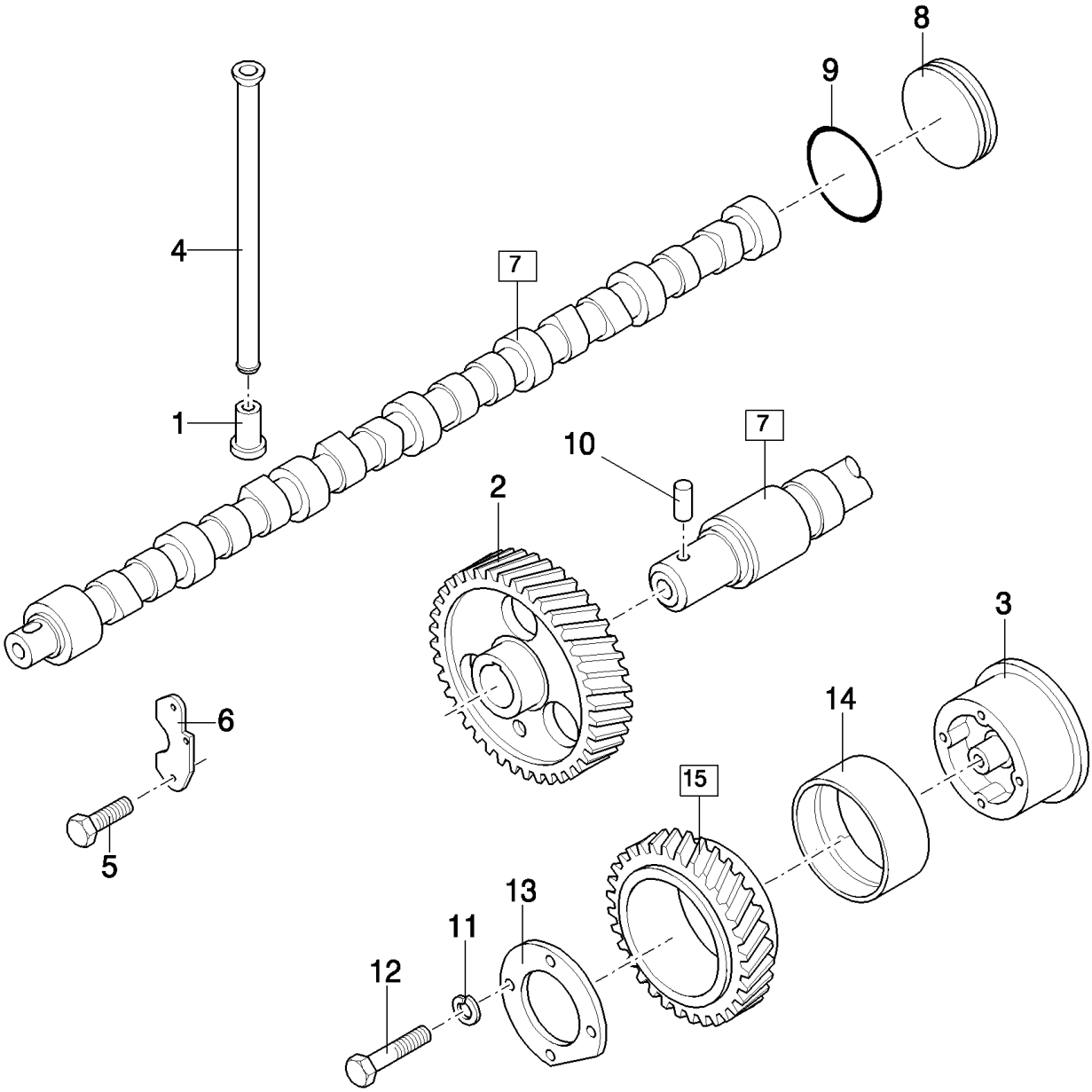

ONLY VALID UNTIL --1076999 (NOT FOR TX68PLUS)

TX68 COMBINE - BASE UNIT

0.10.0(01) TIMING PARTS - GEAR DRIVE

ссылка	Номер детали	Кол-во	Описание
1	61320276	12	TAPPET, , FOR ENGINE TYPE 8460 SRI 10 00 A 007
1	61320983	12	TAPPET, , FOR ENGINE TYPE 8465 SRI 10 00 A 001, FOR TX68PLUS ONLY
1	61320277	12	TAPPET, , FOR ENGINE TYPE 8460 SRI 10 00 A 007
1	61320985	12	TAPPET, , FOR ENGINE TYPE 8465 SRI 10 00 A 001, FOR TX68PLUS ONLY
1	61320278	12	TAPPET, , FOR ENGINE TYPE 8460 SRI 10 00 A 007
1	61320986	12	TAPPET, , FOR ENGINE TYPE 8465 SRI 10 00 A 001, FOR TX68PLUS ONLY
2	61316208	1	GEAR, DRIVEN,
3	61316848	1	HUB,
4	61320259	12	ROD, , FOR ENGINE TYPE 8460 SRI 10 00 A 007
4	61320984	12	ROD, , FOR ENGINE TYPE 8465 SRI 10 00 A 001, FOR TX68PLUS ONLY
5	61315669	2	SCREW,
6	61315668	1	FLANGE,
7	61317263	1	CAMSHAFT, (2,10), FOR ENGINE TYPE 8460 SRI 10 00 A 007
7	61318763	1	CAMSHAFT, (2,10), FOR ENGINE TYPE 8465 SRI 10 00 A 001, FOR TX68PLUS ONLY
8	61319161	1	COVER,
9	14460581	1	O-RING, -147, Cl 7, 2.675" ID x .103" Thk,
10	10839610	1	DOWEL,
11	11194074	4	WASHER, SPRING, Belleville, M8.4,
12	16044734	4	BOLT, Hex, M8 x 75, 10.9,
13	61315842	1	WASHER, THRUST,
14	61315844	1	BUSHING,
15	61316289	1	GEAR, DRIVEN, (14)

ONLY VALID UNTIL --1076999 (NOT FOR TX68PLUS)

0.14.0(01) INJECTION PUMP ASSY

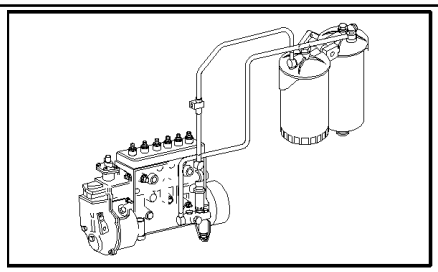

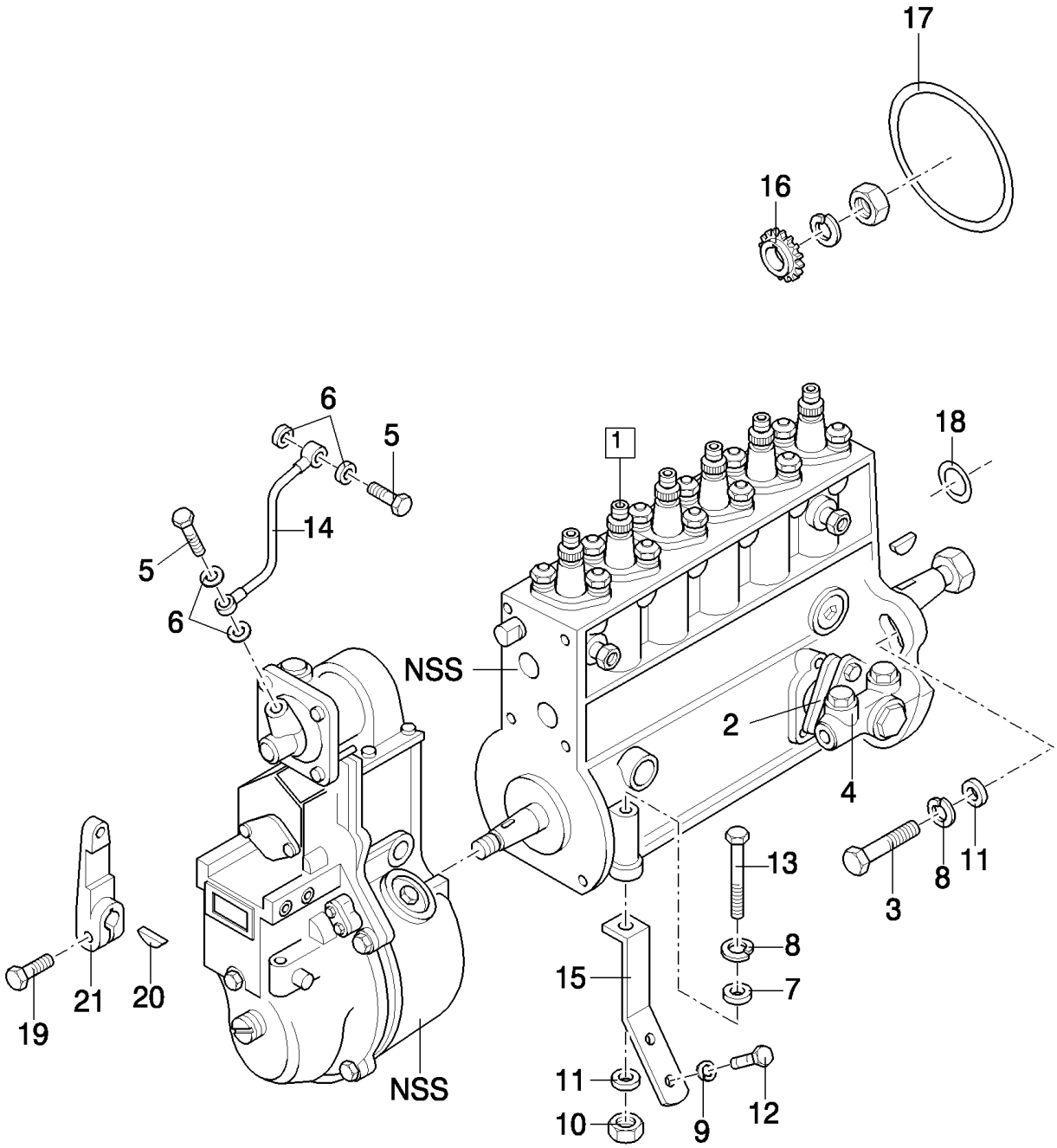

ONLY VALID UNTIL --1076999 (NOT FOR TX68PLUS)

TX68 COMBINE - BASE UNIT

0.14.0(01) INJECTION PUMP ASSY

ссылка	Номер детали	Кол-во	Описание
1	8017054	1	PUMP, FUEL INJECTION, , FOR ENGINE TYPE 8460 SRI 10 00 A 007
1	99462353	1	PUMP, FUEL INJECTION, , FOR ENGINE TYPE 8465 SRI 10 00 A 001
1	500337021	1	PUMP, FUEL INJECTION, , FOR TX68PLUS ONLY
2	76026116	1	GASKET, , NOT FOR TX68PLUS, SEE FIGURE 0.14.0 07
3	16204524	1	BOLT, Hex, M10 x 35,
4	9966736	1	PUMP, FUEL, , SEE FIGURE 0.14.0 07, NOT FOR TX68PLUS
5	2854291	2	BOLT, BANJO,
6	2854292	4	SEAL WASHER, , NOT FOR TX68PLUS
6	98474306	1	WASHER, SEALING, , FOR TX68PLUS ONLY
7	12642521	1	WASHER, M10 x 22 x 2,
8	11194079	2	WASHER, SPRING, Belleville, M8.4,
8	11198374	2	WASHER, SPRING, Belleville, M10.5, , FOR TX68PLUS ONLY
9	11193874	1	WASHER, SPRING, Belleville, M8.4,
10	12164721	3	NUT, M10 x 1.25, Cl 10, , NOT FOR TX68PLUS
11	12626021	1	WASHER, M10 x 22 x 3, , FOR ENGINE TYPE 8460 SRI 10 00 A 007
11	61320297	1	WASHER, , FOR ENGINE TYPE 8465 SRI 10 00 A 001, FOR TX68PLUS ONLY
13	15971721	1	BOLT, Hex, M10 x 1.25 x 95, 8.8, M10x95, NOT FOR TX68PLUS
13	15971734	1	BOLT, Hex, M10 x 1.25 x 95, 10.9,
14	8009123	1	TUBE, RIGID, , FOR ENGINE TYPE 8460 SRI 10 00 A 007
14	61321630	1	TUBE, RIGID, , FOR ENGINE TYPE 8465 SRI 10 00 A 001
14	61319078	1	TUBE, RIGID, , FOR TX68PLUS ONLY
15	61319215	1	SUPPORT,
16	61319214	1	BUSHING, SPLINED,
17	61317062	1	GASKET,
18	61317701	1	GASKET,
19	16602124	1	SCREW, , NOT FOR TX68PLUS
20	98417458	1	KEY, , NOT FOR TX68PLUS
21	98417455	1	LEVER, , NOT FOR TX68PLUS, FOR ENGINE TYPE 8460 SRI 10 00 A 007
21	8108826	1	LEVER, , FOR ENGINE TYPE 8465 SRI 10 00 A 001, NOT FOR TX68PLUS
12	16043324	2	BOLT, Hex, M8 x 18, 8.8, Full Thd,

ONLY VALID UNTIL --1076999 (NOT FOR TX68PLUS)

0.14.0(02) INJECTION PUMP DRIVE

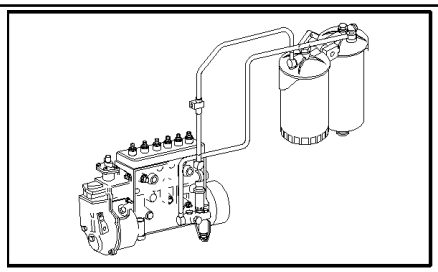

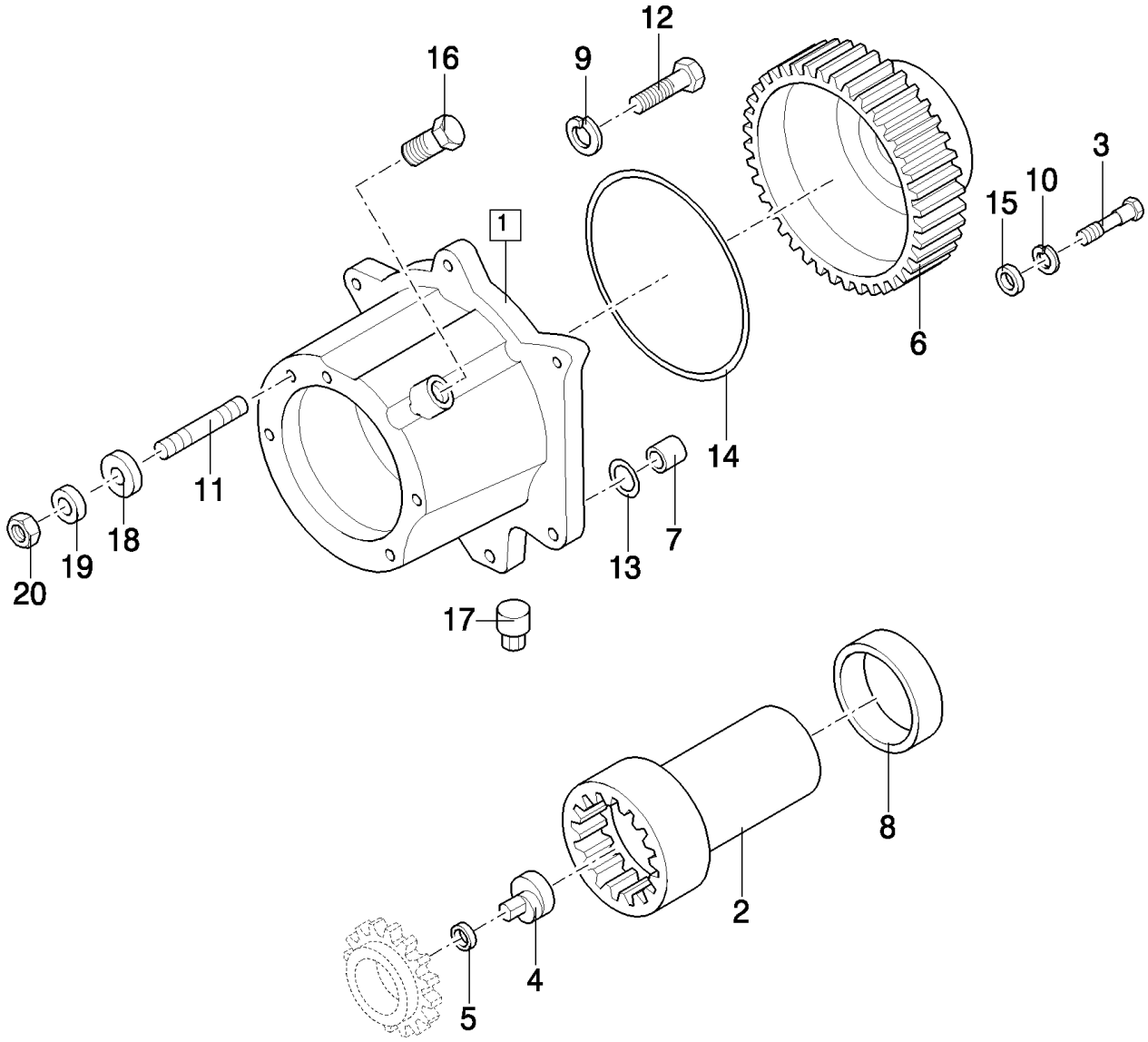

ONLY VALID UNTIL --1076999 (NOT FOR TX68PLUS)

TX68 COMBINE - BASE UNIT

0.14.0(02) INJECTION PUMP DRIVE

ссылка	Номер детали	Кол-во	Описание
1	61319183	1	SUPPORT, (7,8,11,13,17), FOR ENGINE TYPE 8460 SRI 10 00 A 007
1	61318108	1	SUPPORT, (7,8,11,13,17), FOR ENGINE TYPE 8465 SRI 10 00 A 001, FOR TX68PLUS ONLY
2	61319188	1	SHAFT,
3	15540934	3	BOLT, Hex, M12 x 1.25 x 55, 10.9,
4	61317603	1	CAM,
5	61316640	1	WASHER,
6	61317602	1	GEAR,
7	61584413	1	BUSHING,
8	61585959	2	BUSHING,
9	11194079	3	WASHER, SPRING, Belleville, M8.4,
10	11198673	3	WASHER, LOCK, M12
11	13449824	3	STUD, M10x15x35
12	16690624	3	SCREW, M8x25
13	9672548	1	O-RING, -011, 70 Duro, .301" ID x .070" Thk,
14	17286281	1	ELEMENT, SEALING, 2.62x125.7
15	4837398	3	WASHER,
16	8007695	1	PLUG, , NOT FOR TX68PLUS
16	500367988	1	PLUG, , FOR TX68PLUS ONLY
17	14326101	1	PLUG, 8x1.25, NOT FOR TX68PLUS
18	12626321	3	WASHER, 10x25x4, NOT FOR TX68PLUS
18	61320297	3	WASHER, , FOR TX68PLUS ONLY
19	11198374	3	WASHER, SPRING, Belleville, M10.5, , NOT FOR TX68PLUS
19	11190574	3	WASHER, SPRING, Belleville, M10.5, , FOR TX68PLUS ONLY
20	12164721	3	NUT, M10 x 1.25, Cl 10, , FOR TX68PLUS ONLY
20	12164714	3	NUT, M10 x 1.25, Cl 8, , NOT FOR TX68PLUS

ONLY VALID UNTIL --1076999 (NOT FOR TX68PLUS)

0.14.0(03) INJECTION PUMP - NOZZLES

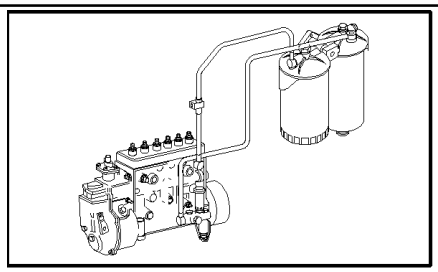

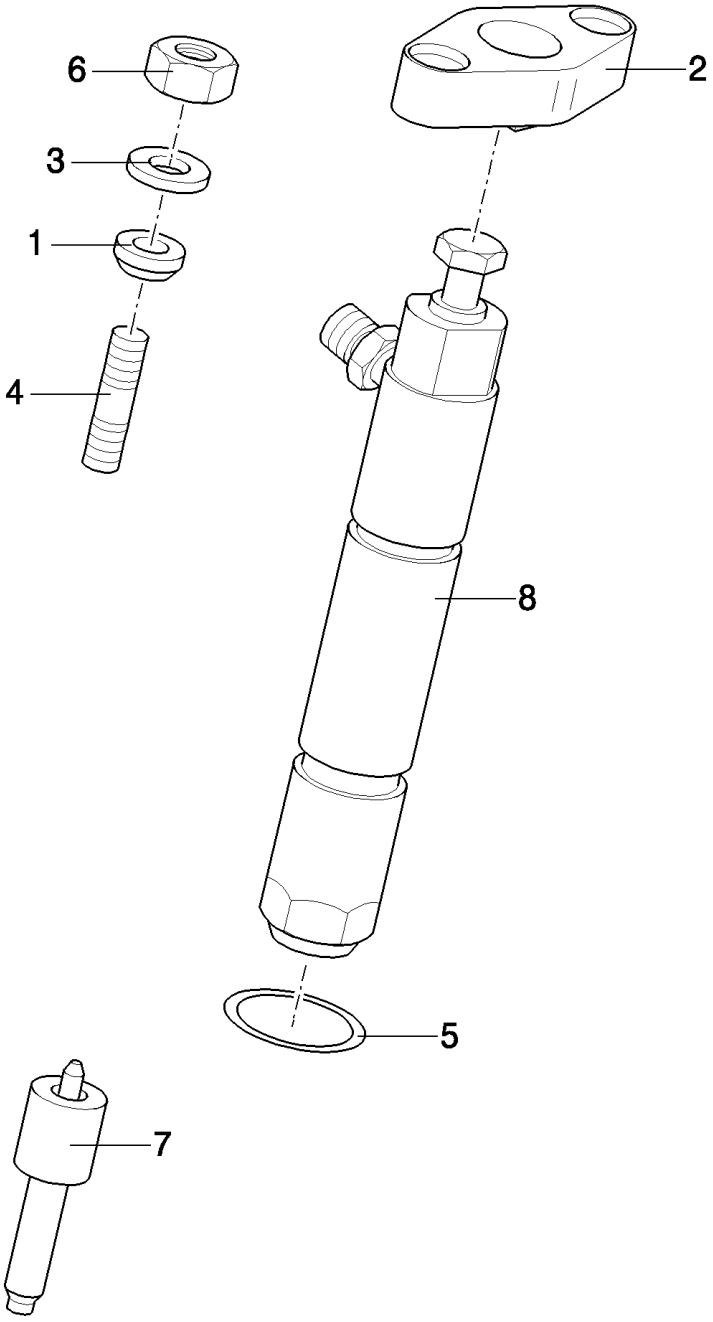

ONLY VALID UNTIL --1076999 (NOT FOR TX68PLUS)

TX68 COMBINE - BASE UNIT

0.14.0(03) INJECTION PUMP - NOZZLES

ссылка	Номер детали	Кол-во	Описание
1	4700162	12	WASHER,
2	98406199	6	BRACKET,
3	11190574	12	WASHER, SPRING, Belleville, M10.5,
4	13450634	12	STUD, , NOT FOR TX68PLUS
4	13450334	12	STUD, , FOR TX68PLUS ONLY
5	14453581	6	O-RING, 18.77MM ID x 1.78 Thk,
6	12164721	12	NUT, M10 x 1.25, Cl 10,
7	98480703	6	NOZZLE, , NOT FOR TX68PLUS
7	500338048	6	NOZZLE, , FOR TX68PLUS ONLY
8	98480702	6	HOLDER, INJECTOR NOZZLE, , FOR ENGINE TYPE 8460 SRI 10 00 A 007
8	98480701	6	INJECTOR, FUEL SYSTEM, , FOR ENGINE TYPE 8465 SRI 10 00 A 001
8	500334269	6	INJECTOR, FUEL SYSTEM, , FOR TX68PLUS ONLY

ONLY VALID UNTIL --1076999 (NOT FOR TX68PLUS)

0.14.0(04) INJECTOR

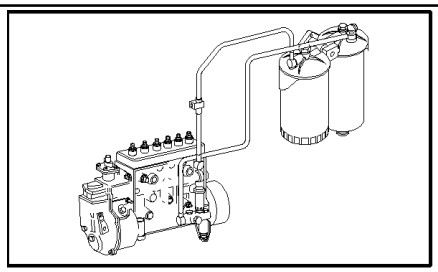

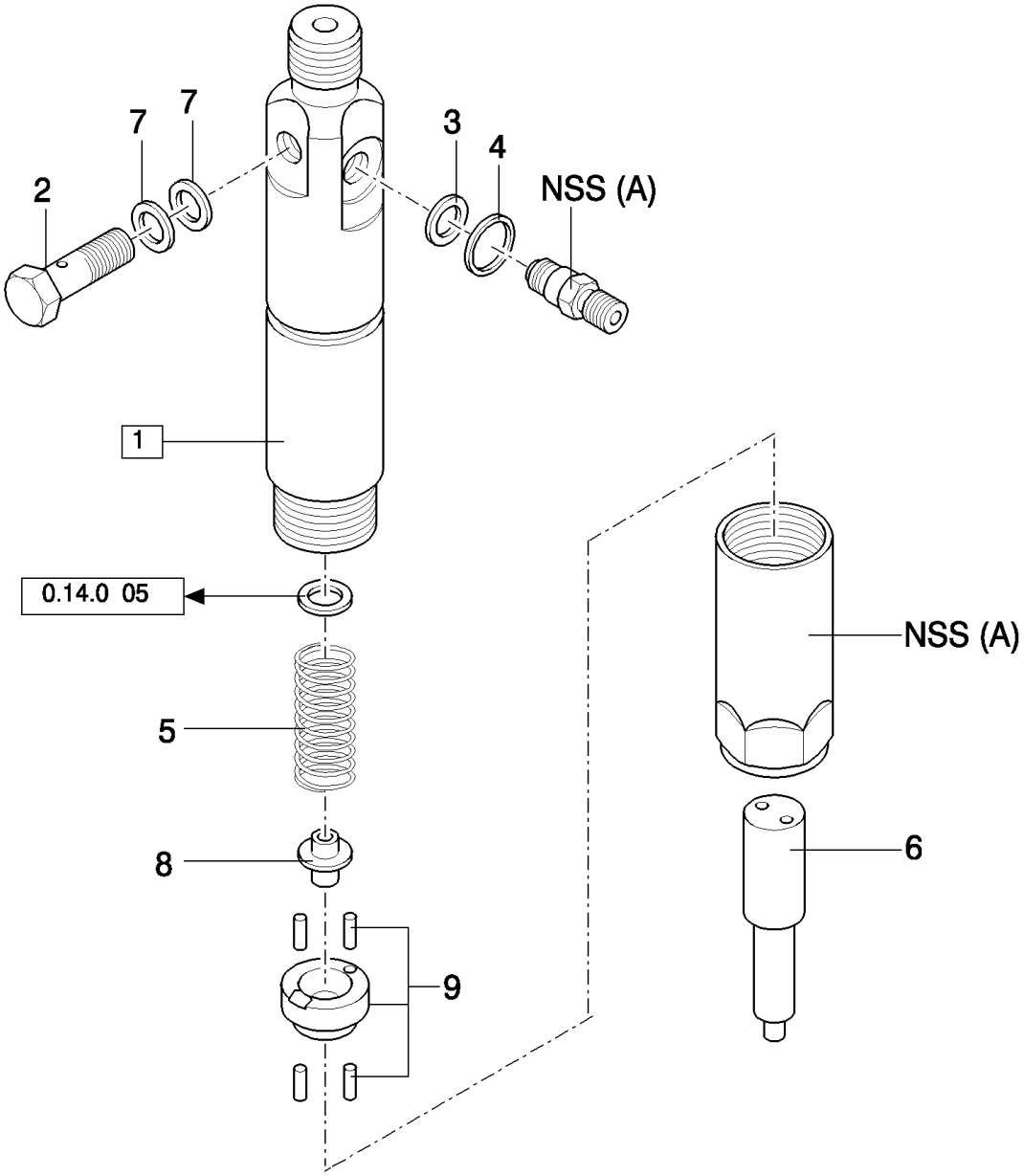

ONLY VALID UNTIL --1076999 (NOT FOR TX68PLUS)

TX68 COMBINE - BASE UNIT

0.14.0(04) INJECTOR

ссылка	Номер детали	Кол-во	Описание
1	98480701	1	INJECTOR, FUEL SYSTEM, (2 to 6,A), NOT FOR TX68PLUS
1	500334269	1	INJECTOR, FUEL SYSTEM, , FOR TX68PLUS ONLY
2	9009403	1	BOLT, BANJO, , NOT FOR TX68PLUS
2	9982964	1	BOLT, BANJO, , FOR TX68PLUS ONLY
3	75204898	1	GASKET, , NOT FOR TX68PLUS
4	75204900	1	GASKET, , NOT FOR TX68PLUS
5	8190848	1	SPRING, , NOT FOR TX68PLUS
5	9972015	1	SPRING, , FOR TX68PLUS ONLY
6	98480703	1	NOZZLE, , NOT FOR TX68PLUS
6	500338048	1	NOZZLE, , FOR TX68PLUS ONLY
7	NSS	2	NOT SERVICED SEPARATELY, Gasket, NOT FOR TX68PLUS
7	9929742	2	GASKET, , FOR TX68PLUS ONLY
8	NSS	1	NOT SERVICED SEPARATELY, Valve, NOT FOR TX68PLUS
8	9972016	1	VALVE, HYDRAULIC, , FOR TX68PLUS ONLY
9	NSS	1	NOT SERVICED SEPARATELY, , NOT FOR TX68PLUS
9	9972017	1	RING, , FOR TX68PLUS ONLY

ONLY VALID UNTIL --1076999 (NOT FOR TX68PLUS)

0.14.0(05) INJECTOR (NOT FOR TX68PLUS)

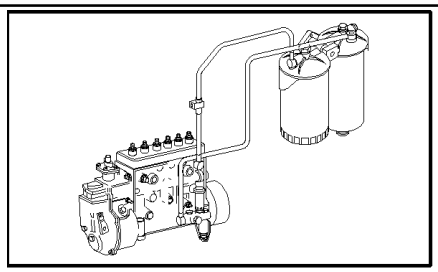

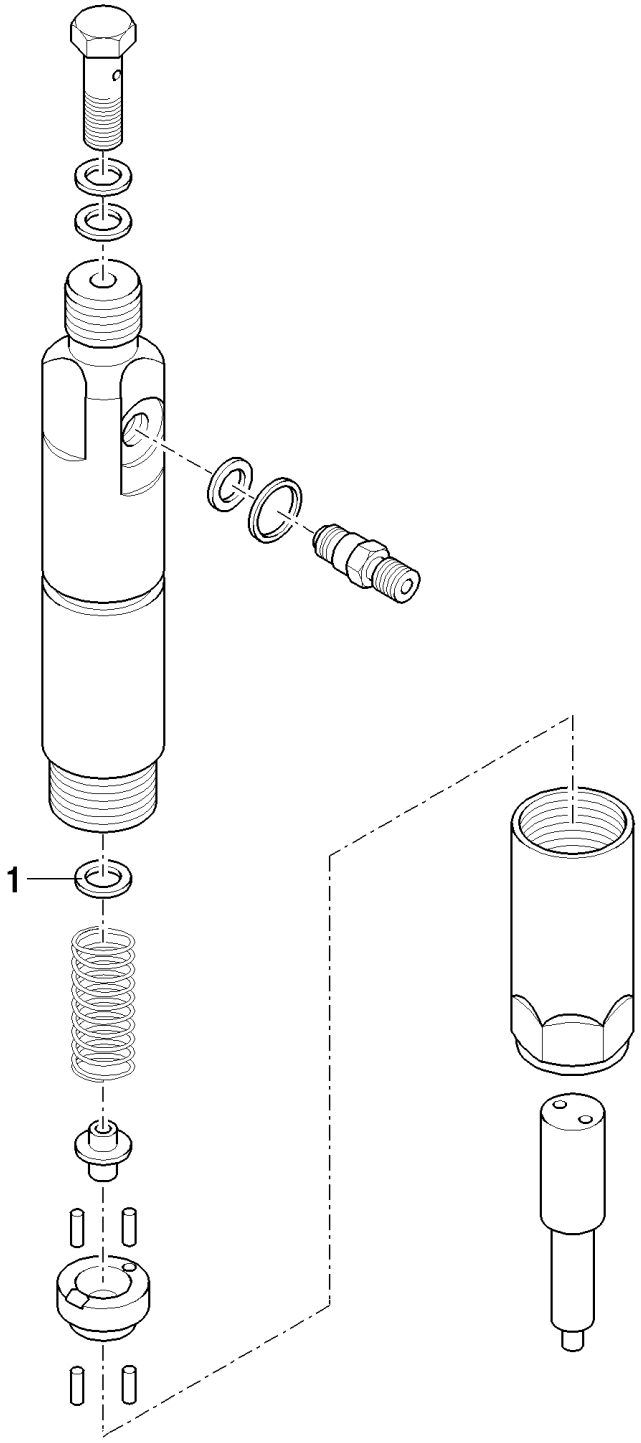

ONLY VALID UNTIL --1076999

TX68 COMBINE - BASE UNIT

0.14.0(05) INJECTOR (NOT FOR TX68PLUS)

ссылка	Номер детали	Кол-во	Описание
1	9967435	1	SHIM, 0.80mm Thk,
1	9967436	1	SHIM, 0.82mm Thk,
1	9967437	1	SHIM, 0.84mm Thk,
1	9967438	1	SHIM, 0.86mm Thk,
1	9967439	1	SHIM, 0.88mm Thk,
1	9967440	1	SHIM, 0.90mm Thk,
1	9967441	1	SHIM, 0.92mm Thk,
1	9967442	1	SHIM, 0.94mm Thk,
1	9967443	1	SHIM, 0.96mm Thk,
1	9967444	1	SHIM, 0.98mm Thk,
1	9967445	1	SHIM, 1.00mm Thk,
1	9967446	1	SHIM, 1.02mm Thk,
1	9967447	1	SHIM, 1.04mm Thk,
1	9967448	1	SHIM, 1.06mm Thk,
1	9967449	1	SHIM, 1.08mm Thk,
1	9967450	1	SHIM, 1.10mm Thk,
1	9967451	1	SHIM, 1.12mm Thk,
1	9967452	1	SHIM, 1.14mm Thk,
1	9967453	1	SHIM, 1.16mm Thk,
1	9967454	1	SHIM, 1.18mm Thk,
1	9967455	1	SHIM, 1.20mm Thk,
1	9967456	1	SHIM, 1.22mm Thk,
1	9967457	1	SHIM, 1.24mm Thk,
1	9967458	1	SHIM, 1.26mm Thk,
1	9967459	1	SHIM, 1.28mm Thk,
1	9967460	1	SHIM, 1.30mm Thk,
1	9967461	1	SHIM, 1.32mm Thk,
1	9967462	1	SHIM, 1.34mm Thk,
1	9967463	1	SHIM, 1.36mm Thk,
1	9967464	1	SHIM, 1.38mm Thk,
1	9967465	1	SHIM, 1.40mm Thk,
1	9967466	1	SHIM, 1.42mm Thk,
1	9967467	1	SHIM, 1.44mm Thk,
1	9967468	1	SHIM, 1.46mm Thk,
1	9967469	1	SHIM, 1.48mm Thk,
1	9967470	1	SHIM, 1.50mm Thk,
1	9967471	1	SHIM, 1.52mm Thk,
1	9967472	1	SHIM, 1.54mm Thk,
1	9967473	1	SHIM, 1.56mm Thk,
1	9967474	1	SHIM, 1.58mm Thk,

ONLY VALID UNTIL --1076999

0.14.0(05A) INJECTOR - TX68PLUS

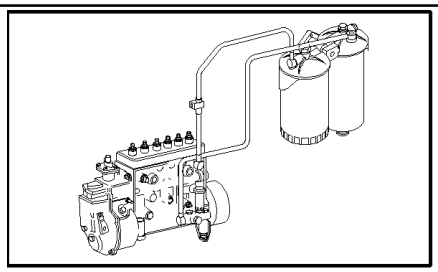

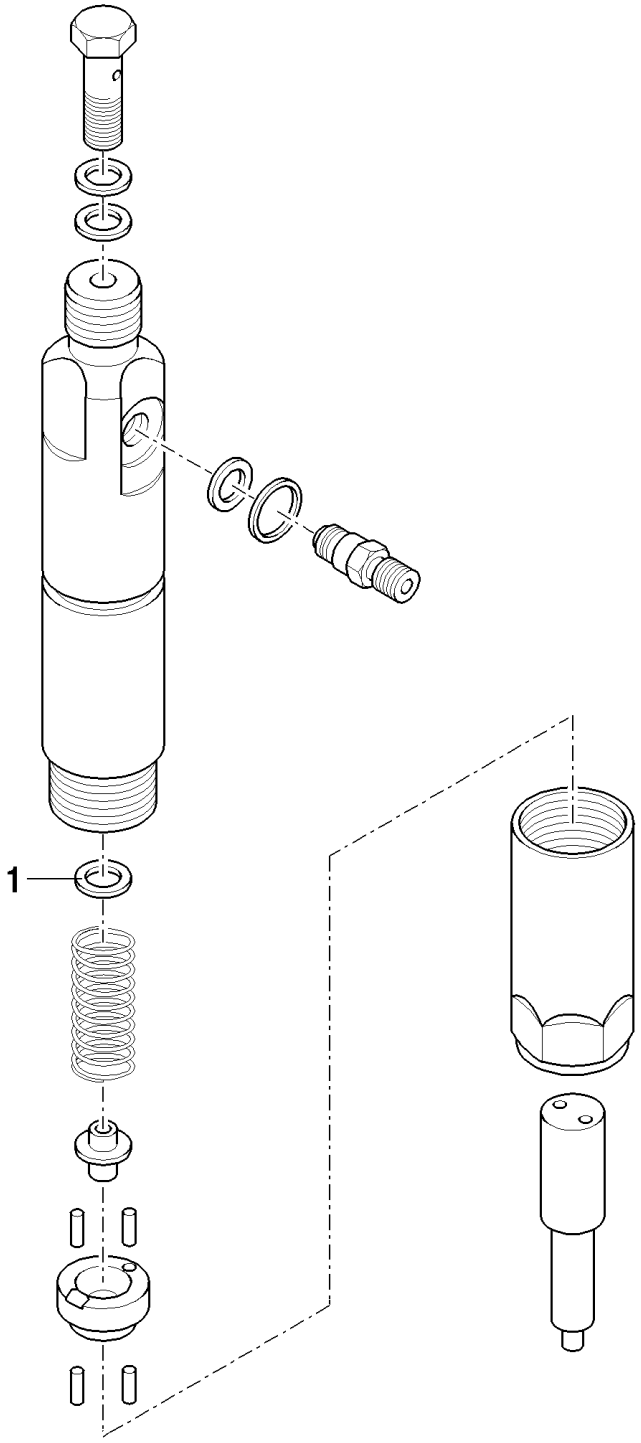

TX68 COMBINE - BASE UNIT

0.14.0(05A) INJECTOR - TX68PLUS

ссылка	Номер детали	Кол-во	Описание
1	9971915	AR	SHIM, 1.00mm Thk,
1	9971916	AR	SHIM, 1.01mm Thk,
1	9971917	AR	SHIM, 1.02mm Thk,
1	9971918	AR	SHIM, 1.03mm Thk,
1	9971919	AR	SHIM, 1.04mm Thk,
1	9971920	AR	SHIM, 1.05mm Thk,
1	9971921	AR	SHIM, 1.06mm Thk,
1	9971922	AR	SHIM, 1.07mm Thk,
1	9971923	AR	SHIM, 1.08mm Thk,
1	9971924	AR	SHIM, 1.09mm Thk,
1	9971925	AR	SHIM, 1.10mm Thk,
1	9971926	AR	SHIM, 1.11mm Thk,
1	9971927	AR	SHIM, 1.12mm Thk,
1	9971928	AR	SHIM, 1.13mm Thk,
1	9971929	AR	SHIM, 1.14mm Thk,
1	9971930	AR	SHIM, 1.15mm Thk,
1	9971931	AR	SHIM, 1.16mm Thk,
1	9971932	AR	SHIM, 1.17mm Thk,
1	9971933	AR	SHIM, 1.18mm Thk,
1	9971934	AR	SHIM, 1.19mm Thk,
1	9971935	AR	SHIM, 1.20mm Thk,
1	9971936	AR	SHIM, 1.21mm Thk,
1	9971937	AR	SHIM, 1.22mm Thk,
1	9971938	AR	SHIM, 1.23mm Thk,
1	9971939	AR	SHIM, 1.24mm Thk,
1	9971940	AR	SHIM, 1.25mm Thk,
1	9971941	AR	SHIM, 1.26mm Thk,
1	9971942	AR	SHIM, 1.27mm Thk,
1	9971943	AR	SHIM, 1.28mm Thk,
1	9971944	AR	SHIM, 1.29mm Thk,
1	9971945	AR	SHIM, 1.30mm Thk,
1	9971946	AR	SHIM, 1.31mm Thk,
1	9971947	AR	SHIM, 1.32mm Thk,
1	9971948	AR	SHIM, 1.33mm Thk,
1	9971949	AR	SHIM, 1.34mm Thk,
1	9971950	AR	SHIM, 1.35mm Thk,
1	9971951	AR	SHIM, 1.36mm Thk,
1	9971952	AR	SHIM, 1.37mm Thk,
1	9971953	AR	SHIM, 1.38mm Thk,
1	9971954	AR	SHIM, 1.39mm Thk,
1	9971955	AR	SHIM, 1.40mm Thk,
1	9971956	AR	SHIM, 1.41mm Thk,
1	9971957	AR	SHIM, 1.42mm Thk,
1	9971958	AR	SHIM, 1.43mm Thk,

TX68 COMBINE - BASE UNIT

0.14.0(05A) INJECTOR - TX68PLUS

ссылка	Номер детали	Кол-во	Описание
1	9971959	AR	SHIM, 1.44mm Thk,
1	9971960	AR	SHIM, 1.45mm Thk,
1	9971961	AR	SHIM, 1.46mm Thk,
1	9971962	AR	SHIM, 1.47mm Thk,
1	9971963	AR	SHIM, 1.48mm Thk,
1	9971964	AR	SHIM, 1.49mm Thk,
1	9971965	AR	SHIM, 1.50mm Thk,
1	9971966	AR	SHIM, 1.51mm Thk,
1	9971967	AR	SHIM, 1.52mm Thk,
1	9971968	AR	SHIM, 1.53mm Thk,
1	9971969	AR	SHIM, 1.54mm Thk,
1	9971970	AR	SHIM, 1.55mm Thk,
1	9971971	AR	SHIM, 1.56mm Thk,
1	9971972	AR	SHIM, 1.57mm Thk,
1	9971973	AR	SHIM, 1.58mm Thk,
1	9971974	AR	SHIM, 1.59mm Thk,
1	9971975	AR	SHIM, 1.60mm Thk,
1	9971976	AR	SHIM, 1.61mm Thk,
1	9971977	AR	SHIM, 1.62mm Thk,
1	9971978	AR	SHIM, 1.63mm Thk,
1	9971979	AR	SHIM, 1.64mm Thk,
1	9971980	AR	SHIM, 1.65mm Thk,
1	9971981	AR	SHIM, 1.66mm Thk,
1	9971982	AR	SHIM, 1.67mm Thk,
1	9971983	AR	SHIM, 1.68mm Thk,
1	9971984	AR	SHIM, 1.69mm Thk,
1	9971985	AR	SHIM, 1.70mm Thk,
1	9971986	AR	SHIM, 1.71mm Thk,
1	9971987	AR	SHIM, 1.72mm Thk,
1	9971988	AR	SHIM, 1.73mm Thk,
1	9971989	AR	SHIM, 1.74mm Thk,
1	9971990	AR	SHIM, 1.75mm Thk,
1	9971991	AR	SHIM, 1.76mm Thk,
1	9971992	AR	SHIM, 1.77mm Thk,
1	9971993	AR	SHIM, 1.78mm Thk,
1	9971994	AR	SHIM, 1.79mm Thk,
1	9971995	AR	SHIM, 1.80mm Thk,
1	9971996	AR	SHIM, 1.81mm Thk,
1	9971997	AR	SHIM, 1.82mm Thk,
1	9971998	AR	SHIM, 1.83mm Thk,
1	9971999	AR	SHIM, 1.84mm Thk,
1	9972000	AR	SHIM, 1.85mm Thk,
1	9972001	AR	SHIM, 1.86mm Thk,
1	9972002	AR	SHIM, 1.87mm Thk,

TX68 COMBINE - BASE UNIT

0.14.0(05A) INJECTOR - TX68PLUS

ссылка	Номер детали	Кол-во	Описание
1	9972003	AR	SHIM, 1.88mm Thk,
1	9972004	AR	SHIM, 1.89mm Thk,
1	9972005	AR	SHIM, 1.90mm Thk,
1	9972006	AR	SHIM, 1.91mm Thk,
1	9972007	AR	SHIM, 1.92mm Thk,
1	9972008	AR	SHIM, 1.93mm Thk,
1	9972009	AR	SHIM, 1.94mm Thk,
1	9972010	AR	SHIM, 1.95mm Thk,
1	9972011	AR	SHIM, 1.96mm Thk,
1	9972012	AR	SHIM, 1.97mm Thk,
1	9972013	AR	SHIM, 1.98mm Thk,
1	9972014	AR	SHIM, 1.99mm Thk,

0.14.0(06) INJECTION PIPES

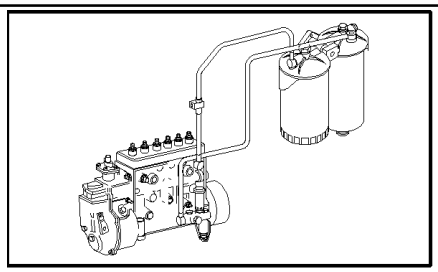

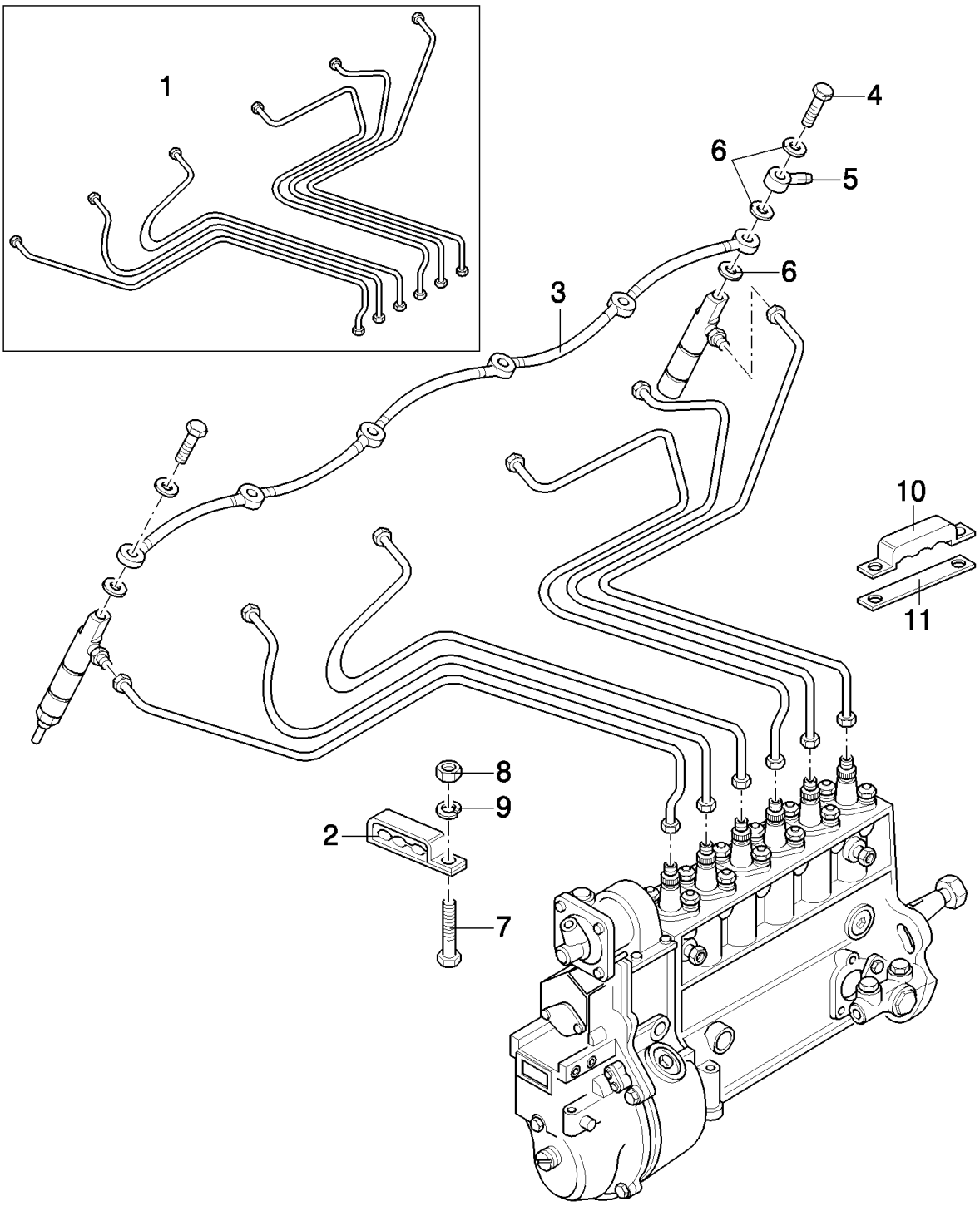

ONLY VALID UNTIL --1076999 (NOT FOR TX68PLUS)

TX68 COMBINE - BASE UNIT

0.14.0(06) INJECTION PIPES

ссылка	Номер детали	Кол-во	Описание
1	8009618	1	HOSE KIT, , FOR ENGINE TYPE 8460 SRI 10 00 A 007
1	99466471	1	HOSE KIT, , FOR ENGINE TYPE 8465 SRI 10 00 A 001
1	99448108	1	HOSE KIT, , FOR TX68PLUS ONLY
2	8010368	2	COLLAR, RETAINER, , FOR ENGINE TYPE 8460 SRI 10 00 A 007
2	98404551	3	BRACKET, , FOR TX68PLUS ONLY
2	61321568	2	BRACKET, , FOR ENGINE TYPE 8465 SRI 10 00 A 001
2	4788621	1	BRACKET, , FOR TX68PLUS ONLY
3	61320072	1	TUBE, RIGID, , NOT FOR TX68PLUS
3	500368485	1	TUBE, RIGID, , FOR TX68PLUS ONLY
4	61316009	1	BOLT, BANJO, , NOT FOR TX68PLUS
5	4647661	1	CONNECTOR, HYD., , NOT FOR TX68PLUS, FOR ENGINE TYPE 8460 SRI 10 00 A 007
6	98474303	13	WASHER, SEALING,
7	16043121	1	BOLT, Hex, M8 x 14, 8.8, Full Thd,
8	16100811	1	NUT, M8, Cl 8,
9	11194079	1	WASHER, SPRING, Belleville, M8.4,
10	61321698	1	PLATE, COVER, , FOR ENGINE TYPE 8465 SRI 10 00 A 001
11	61321699	1	PLATE, COVER, , FOR ENGINE TYPE 8465 SRI 10 00 A 001

ONLY VALID UNTIL --1076999 (NOT FOR TX68PLUS)

0.14.0(07) FUEL PUMP (COMPONENTS)

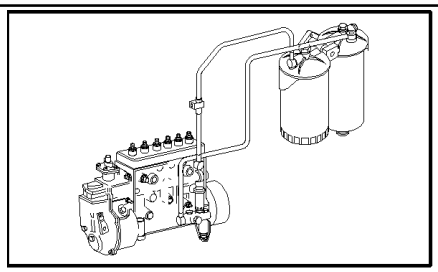

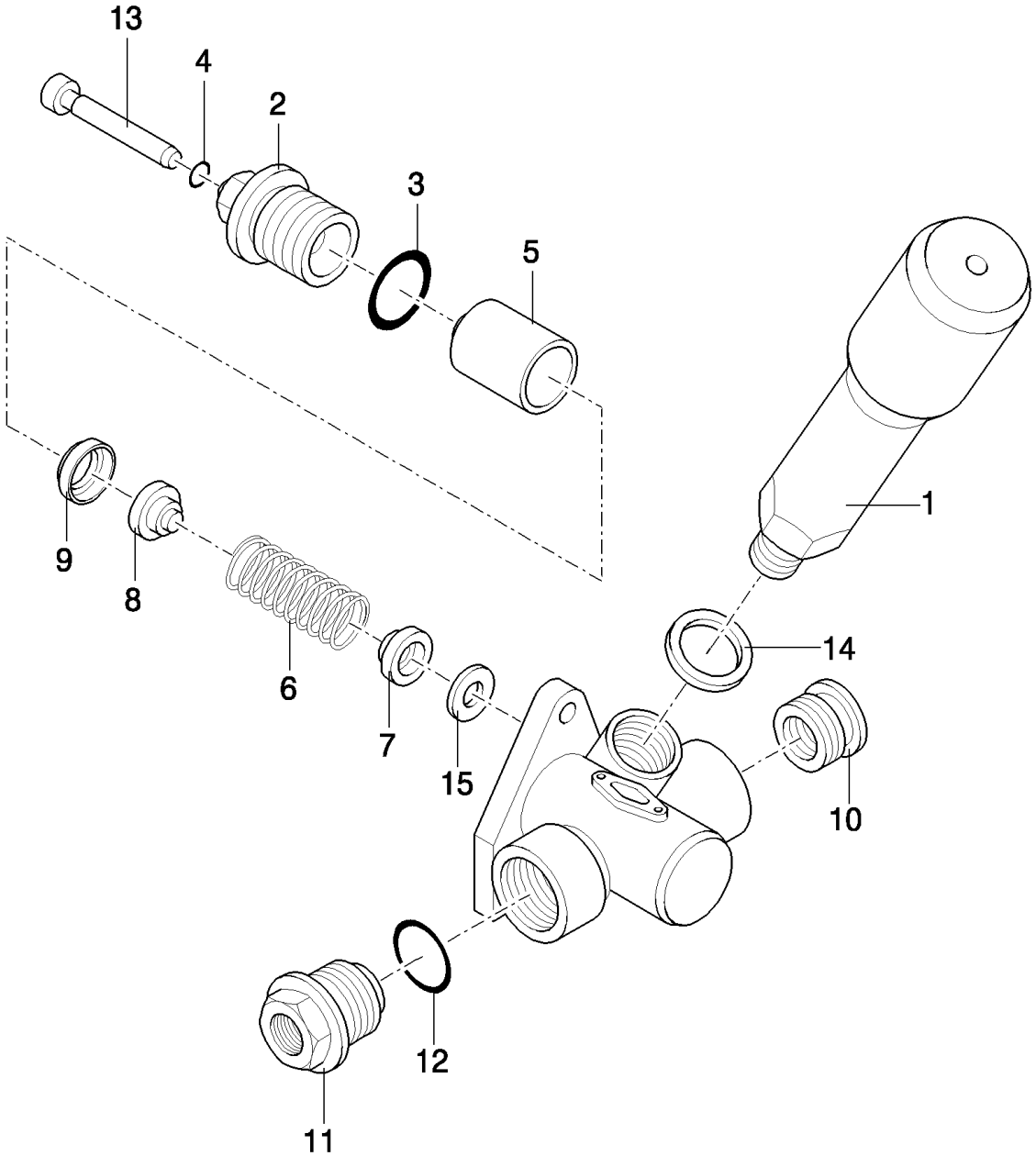

ONLY VALID UNTIL --1076999 (NOT FOR TX68PLUS)

TX68 COMBINE - BASE UNIT

0.14.0(07) FUEL PUMP (COMPONENTS)

ссылка	Номер детали	Кол-во	Описание
	9966736	1	PUMP, FUEL, (1 to 15), NOT FOR TX68PLUS
	9971791	1	PUMP, FUEL, (2 to 13), FOR TX68PLUS ONLY
1	9968879	1	CARTRIDGE, , NOT FOR TX68PLUS
2	71445070	1	CONNECTOR, HYD.,
3	79102554	1	GASKET, , NOT FOR TX68PLUS
3	9968700	1	GASKET, , FOR TX68PLUS ONLY
4	79070369	1	GASKET, , NOT FOR TX68PLUS
4	9969168	1	GASKET, , FOR TX68PLUS ONLY
5	79102553	1	PISTON,
6	9966645	1	SPRING,
7	79102544	2	CAP, WASHER,
8	79102551	1	VALVE, HYDRAULIC,
9	79102552	1	SPACER,
10	71445071	1	BUSHING, , NOT FOR TX68PLUS
10	9966646	1	BUSHING, THREADED, , FOR TX68PLUS ONLY
11	71445072	1	CONNECTOR, HYD., , UP TO PUMP TYPE FD366
11	9967629	1	CONNECTOR, HYD., , FOR TX68PLUS ONLY, FROM PUMP TYPE FD367
12	76026139	1	GASKET, , UP TO PUMP TYPE FD366
12	9967628	1	ELEMENT, SEALING, , FROM PUMP TYPE FD367, FOR TX68PLUS ONLY
13	9967955	1	ROD,
14	9922406	1	WASHER, , NOT FOR TX68PLUS
15	76026116	1	GASKET, , NOT FOR TX68PLUS

ONLY VALID UNTIL --1076999 (NOT FOR TX68PLUS)

0.14.0(08) INJECTION PUMP

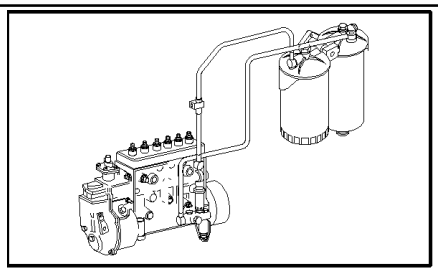

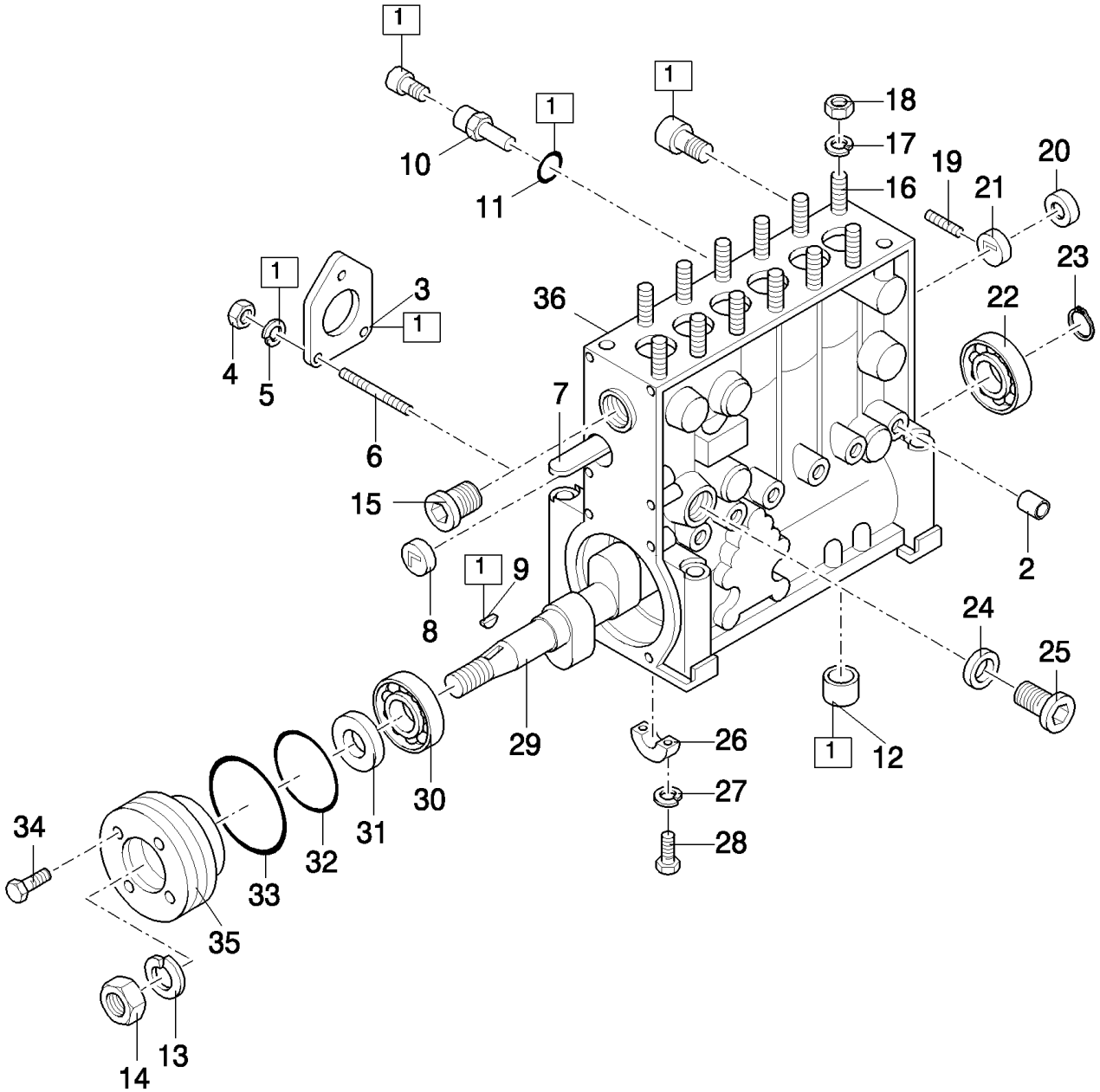
1
1
1

TX68 COMBINE - BASE UNIT

0.14.0(08) INJECTION PUMP

ссылка	Номер детали	Кол-во	Описание
1	9967563	1	KIT, SEALS, (3,5,9)
2	9967854	6	BUSHING,
3	76026116	1	GASKET,
3	79102504	1	GASKET, Rubber
4	15896221	3	NUT, M6, Cl 10,
5	10571574	3	WASHER, LOCK, , NOT FOR TX68PLUS
6	11500211	3	STUD,
7	79038389	1	ROD, , NOT FOR TX68PLUS
7	9970196	1	ROD, ADJUSTMENT, , FOR TX68PLUS ONLY
8	79038718	1	BUSHING, , NOT FOR TX68PLUS
8	772354	1	BUSHING, , FOR TX68PLUS ONLY
9	9929164	1	KEY,
10	9967554	1	VALVE, HYDRAULIC,
11	74061045	1	GASKET,
12	9967636	6	BUSHING,
13	10572371	1	WASHER, LOCK, M20,
14	16980931	1	NUT,
15	79024188	1	PLUG, , NOT FOR TX68PLUS
15	75204112	1	PLUG, , FOR TX68PLUS ONLY
16	76031625	12	STUD,
17	9967555	12	WASHER, LOCK,
18	9967853	12	NUT, , NOT FOR TX68PLUS
18	9967632	12	NUT, , FOR TX68PLUS ONLY
19	772353	1	PIN, ROLL,
20	772354	2	BUSHING,
21	772244	1	SHIM,
22	9967410	1	BEARING ASSY, , NOT FOR TX68PLUS
22	9971905	1	BEARING ASSY, , FOR TX68PLUS ONLY
23	9967556	1	RING, LOCKING,
24	9957969	1	SPACER,
25	9929727	1	PLUG,
26	9967411	1	BEARING, CRANKSHAFT,
27	9967413	2	WASHER, LOCK,
28	9967412	2	SCREW,
29	9967935	1	CAMSHAFT,
30	9967414	1	BEARING ASSY,
31	9966633	1	GASKET,
32	9967415	1	GASKET,
33	9967936	1	GASKET, , NOT FOR TX68PLUS
34	9967557	4	SCREW,
35	NSS	1	NOT SERVICED SEPARATELY, Support, NOT FOR TX68PLUS
35	9969326	1	SUPPORT, , FOR TX68PLUS ONLY
36	9971899	1	BODY, , FOR TX68PLUS ONLY

ONLY VALID UNTIL --1076999 (NOT FOR TX68PLUS)

0.14.0(09) INJECTION PUMP

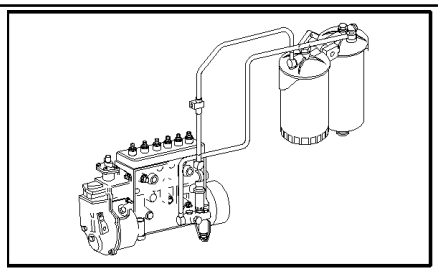

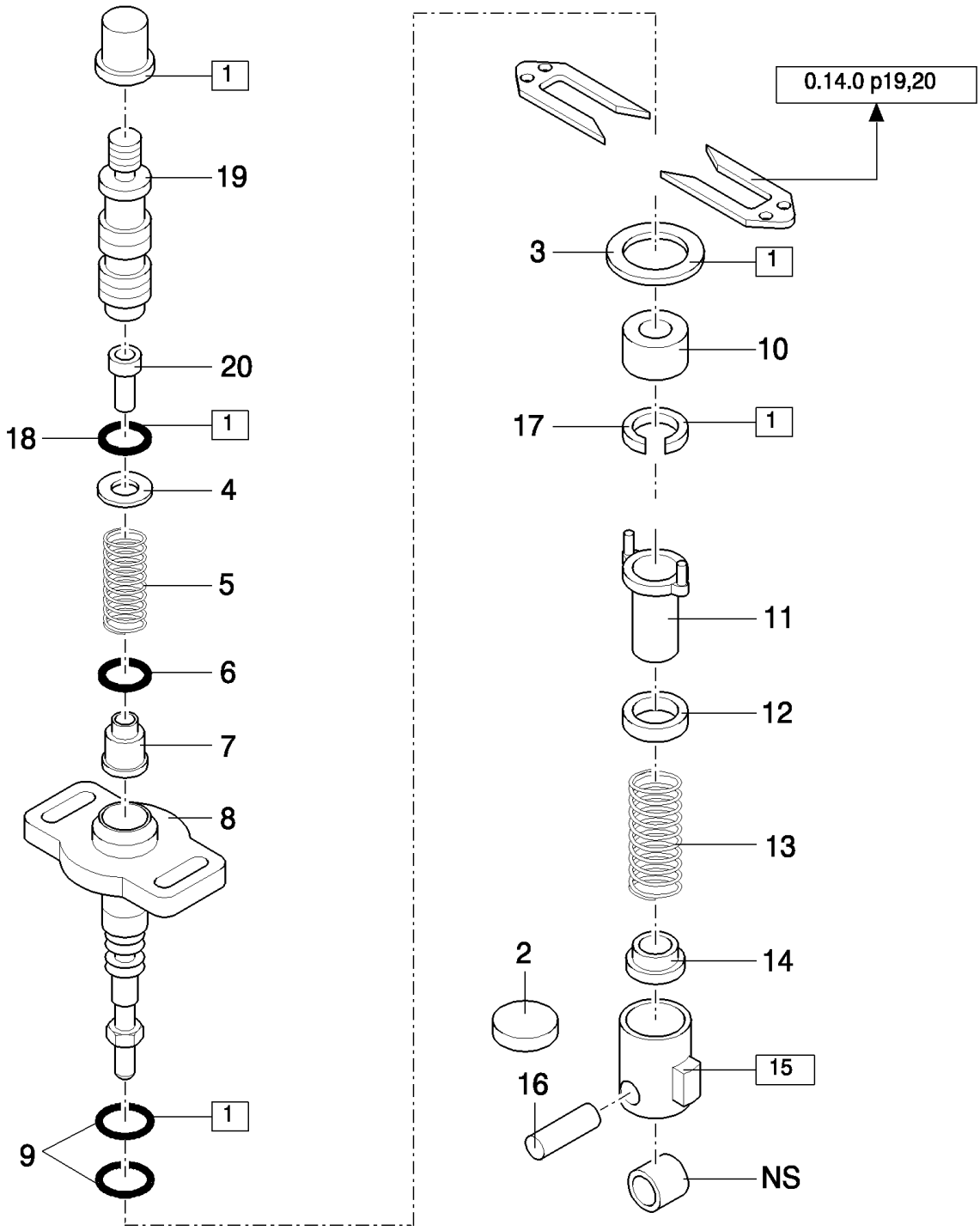

TX68 COMBINE - BASE UNIT

0.14.0(09) INJECTION PUMP

ссылка	Номер детали	Кол-во	Описание
1	9967563	1	KIT, SEALS, (3,9,17,18)
2	9967409	6	PLATE, , NOT FOR TX68PLUS
3	9967504	6	WASHER, , NOT FOR TX68PLUS
3	9967551	6	RING, , FOR TX68PLUS ONLY
4	79026508	AR	WASHER, , NOT FOR TX68PLUS
5	9967401	6	, NOT FOR TX68PLUS
5	9971902	6	SPRING, , FOR TX68PLUS ONLY
6	9967402	6	, NOT FOR TX68PLUS
6	9971903	6	GASKET, , FOR TX68PLUS ONLY
7	9967403	6	, NOT FOR TX68PLUS
7	9971904	6	VALVE, HYDRAULIC, , FOR TX68PLUS ONLY
8	9967400	6	PLUNGER, , NOT FOR TX68PLUS
8	9971900	6	PLUNGER, , FOR TX68PLUS ONLY
9	79038451	12	O-RING,
10	9967852	6	BUSHING,
11	9967406	6	BUSHING,
12	79038390	6	CAP, WASHER,
13	9967407	6	SPRING,
14	9967552	6	PLUG,
15	9967408	6	TAPPET, (16,17)
16	79050759	1	PIN,
17	76026104	6	RING, LOCKING,
18	9967404	6	GASKET,
19	NSS	6	NOT SERVICED SEPARATELY, Valve seat, NOT FOR TX68PLUS
19	9971901	6	VALVE SEAT, , FOR TX68PLUS ONLY
20	NSS	6	NOT SERVICED SEPARATELY, Cap,Washer, NOT FOR TX68PLUS
20	9969325	6	CAP, WASHER, , FOR TX68PLUS ONLY

ONLY VALID UNTIL --1076999 (NOT FOR TX68PLUS)

0.14.0(10) INJECTION PUMP

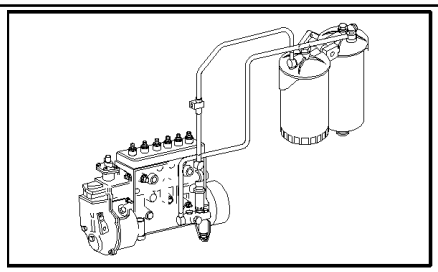

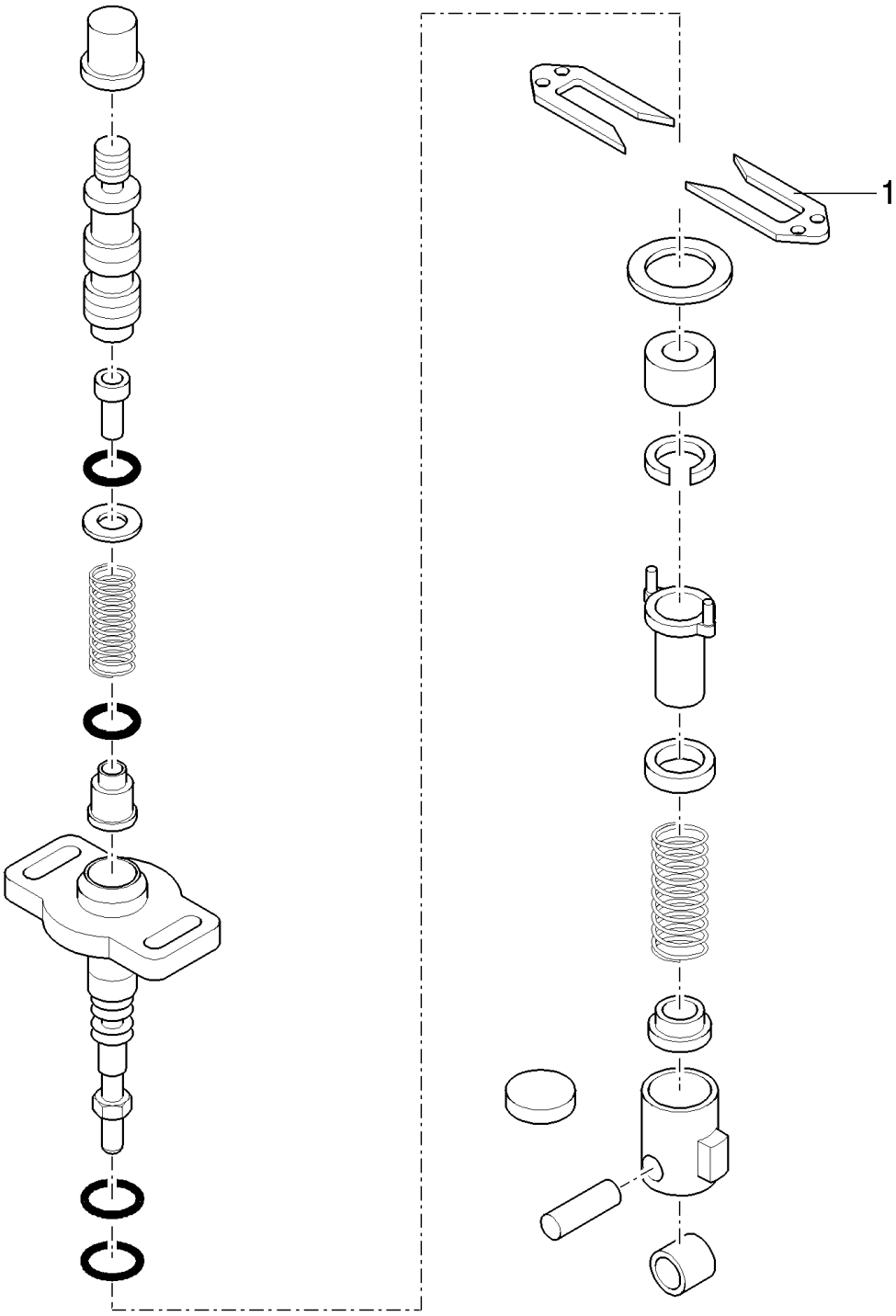

ONLY VALID UNTIL --1076999 (NOT FOR TX68PLUS)

ссылка	Номер детали	Кол-во	Описание
1	772227	AR	SHIM, THK.:0.40MM
1	772228	AR	SHIM, THK.:0.45MM
1	772229	AR	SHIM, THK.:0.50MM
1	772230	AR	SHIM, THK.:0.55MM
1	772231	AR	SHIM, THK.:0.60MM
1	772232	AR	SHIM, THK.:0.65MM
1	772233	AR	SHIM, THK.:0.70MM
1	772234	AR	SHIM, THK.:0.75MM
1	772235	AR	SHIM, THK.:0.80MM
1	772236	AR	SHIM, THK.:0.85MM
1	772237	AR	SHIM, THK.:0.90MM
1	772238	AR	SHIM, THK.:0.95MM
1	772239	AR	SHIM, THK.:1MM
1	772240	AR	SHIM, THK.:1.05MM
1	772241	AR	SHIM, THK.:1.10MM
1	772242	AR	SHIM, THK.:1.15MM
1	772243	AR	SHIM, THK.:1.20MM
1	772244	AR	SHIM, THK.:1.25MM
1	772245	AR	SHIM, THK.:1.30MM
1	772246	AR	SHIM, THK.:1.35MM
1	772247	AR	SHIM, THK.:1.40MM
1	772248	AR	SHIM, THK.:1.45MM
1	772249	AR	SHIM, THK.:1.50MM
1	772250	AR	HOUSING, THK.:1.55MM
1	772251	AR	SHIM, THK.:1.60MM
1	79026539	AR	WASHER, THK.:1.65MM
1	79026540	AR	WASHER, THK.:1.70MM

0.14.0(11) INJECTION PUMP

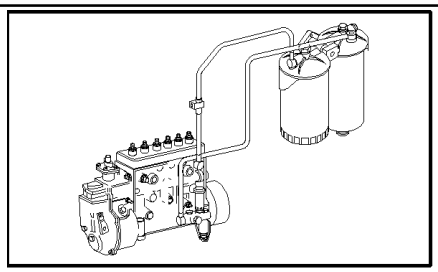

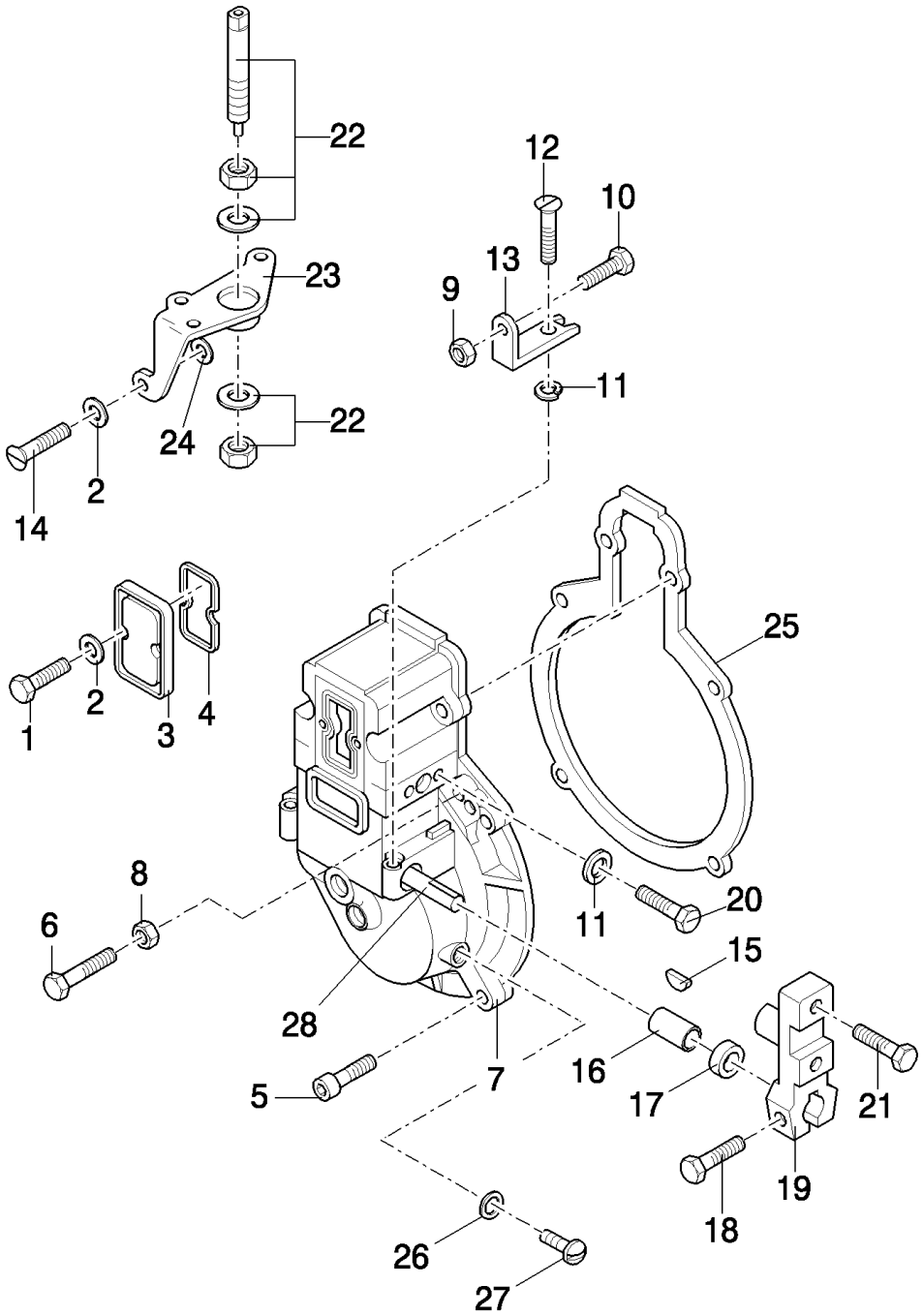

ONLY VALID UNTIL --1076999 (NOT FOR TX68PLUS)

TX68 COMBINE - BASE UNIT

0.14.0(11) INJECTION PUMP

ссылка	Номер детали	Кол-во	Описание
1	772666	2	SCREW, , NOT FOR TX68PLUS
1	9969339	2	SCREW, , FOR TX68PLUS ONLY
2	10571574	3	WASHER, LOCK, , NOT FOR TX68PLUS
2	10516474	8	WASHER, LOCK, , FOR TX68PLUS ONLY
3	9966713	1	COVER,
4	9966714	1	GASKET,
5	76034148	1	SCREW, , NOT FOR TX68PLUS
5	9967875	1	SCREW, , FOR TX68PLUS ONLY
6	79094076	1	SCREW,
7	9967941	1	COVER, , NOT FOR TX68PLUS
7	9971911	1	COVER, , FOR TX68PLUS ONLY
8	774339	1	NUT, , NOT FOR TX68PLUS
8	9967874	1	NUT, , FOR TX68PLUS ONLY
9	76026132	1	NUT, , NOT FOR TX68PLUS
9	15896221	1	NUT, M6, Cl 10, , FOR TX68PLUS ONLY
10	76034852	1	SCREW, , NOT FOR TX68PLUS
10	9966671	1	SCREW, , FOR TX68PLUS ONLY
11	9929742	2	GASKET, , NOT FOR TX68PLUS
11	14496404	2	WASHER, LOCK, , FOR TX68PLUS ONLY
12	9966678	1	SCREW,
13	9966677	1	BRACKET,
14	9967594	1	SCREW,
15	10205710	1	KEY, WOODRUFF, M3 x 5 12.65,
16	9966668	2	BUSHING,
17	9967418	2	GASKET,
18	79111846	2	SCREW,
19	76034143	1	LEVER,
20	10376821	1	SCREW,
21	9967945	1	PLUG,
22	9966723	1	KIT,
23	9967951	1	BRACKET, SUPPORTING, , NOT FOR TX68PLUS
23	9966724	1	COLLAR, RETAINER, , FOR TX68PLUS ONLY
24	9966722	1	SPACER,
25	9966685	1	PLATE, , FOR TX68PLUS ONLY
26	9969337	2	GASKET, , FOR TX68PLUS ONLY
27	9969338	2	SCREW, , FOR TX68PLUS ONLY
28	NSS	1	NOT SERVICED SEPARATELY, Shaft, NOT FOR TX68PLUS
28	79039761	1	SHAFT, , FOR TX68PLUS ONLY

ONLY VALID UNTIL --1076999 (NOT FOR TX68PLUS)

0.14.0(12) INJECTION PUMP

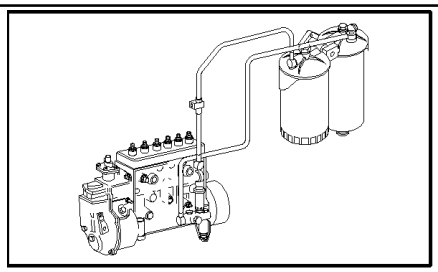

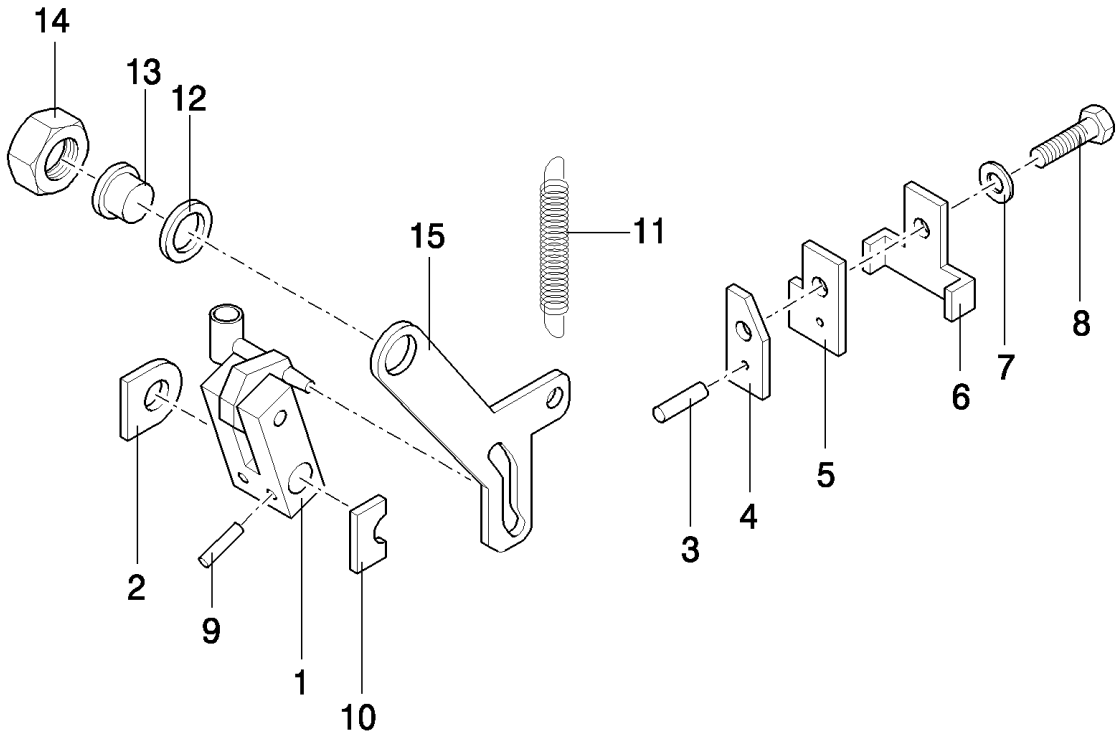

ONLY VALID UNTIL --1076999 (NOT FOR TX68PLUS)

TX68 COMBINE - BASE UNIT

0.14.0(12) INJECTION PUMP

ссылка	Номер детали	Кол-во	Описание
1	9966670	1	LEVER, , NOT FOR TX68PLUS
1	9971912	1	LEVER, , FOR TX68PLUS ONLY
2	9967279	2	PLATE, COVER,
3	9017850	2	PIN, ROLL,
4	9966680	AR	PLATE, COVER,
5	9966672	1	PLATE, ADJUSTING, THK.:0.20MM
5	9966673	1	PLATE, ADJUSTING, THK.:0.30MM
5	9966674	1	PLATE, ADJUSTING, THK.:0.80MM
5	9966675	1	PLATE, ADJUSTING, THK.:0.50MM
6	9966684	1	U-BRACKET,
7	10516474	1	WASHER, LOCK,
8	10902431	1	BOLT, Hex, M6 x 20, 10.9,
9	79111848	1	PIN, ROLL,
10	79046270	1	PLATE, COVER, , NOT FOR TX68PLUS
10	9968730	1	PLATE, , FOR TX68PLUS ONLY
11	9966679	1	
12	9929743	1	WASHER, SEALING, , NOT FOR TX68PLUS
12	767537	1	WASHER, THK.:0.20MM, FOR TX68PLUS ONLY
12	9967944	1	SHIM, 0.30mm Thk, , FOR TX68PLUS ONLY
13	9966681	1	INSTALLER JIG,
14	9967946	1	
15	9966669	1	PLATE, COVER,

ONLY VALID UNTIL --1076999 (NOT FOR TX68PLUS)

0.14.0(13) INJECTION PUMP

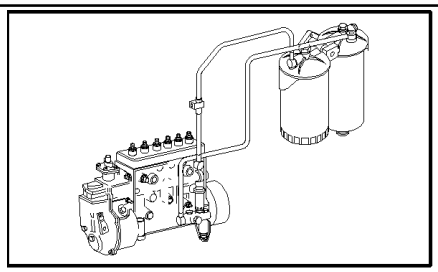

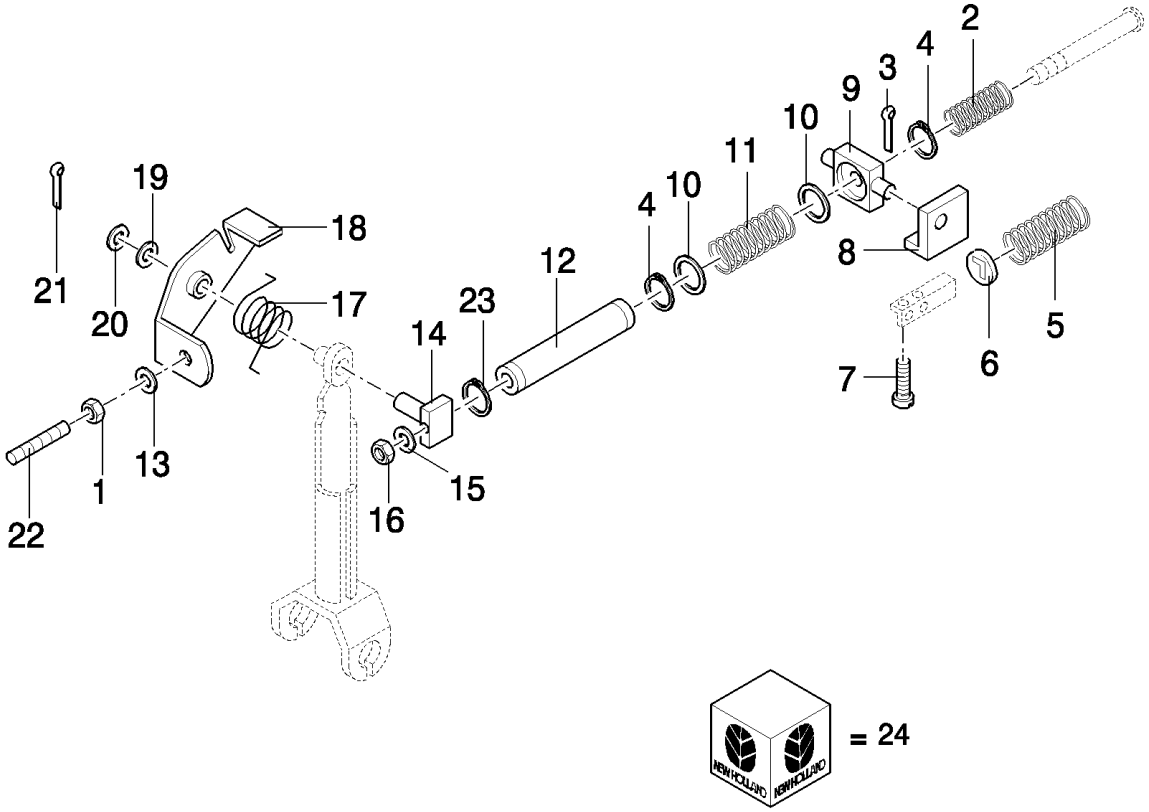

ONLY VALID UNTIL --1076999 (NOT FOR TX68PLUS)

TX68 COMBINE - BASE UNIT

0.14.0(13) INJECTION PUMP

ссылка	Номер детали	Кол-во	Описание
1	79112016	1	NUT, , NOT FOR TX68PLUS
1	9930423	1	NUT, , FOR TX68PLUS ONLY
2	9966659	1	SPRING,
3	76026122	1	PIN, SPLIT (COTTER),
4	9966660	1	RING, LOCKING,
5	774245	1	SPRING,
6	9966694	1	CAP, WASHER,
7	9966666	2	SCREW,
8	9966665	1	SUPPORT,
9	9966656	1	PAD, SLIDING, , NOT FOR TX68PLUS
9	9971909	1	PAD, SLIDING, , FOR TX68PLUS ONLY
10	9966661	1	WASHER,
11	9966658	1	SPRING,
12	9966732	1	PIN,
13	10516474	1	WASHER, LOCK,
14	9966657	1	PIN, , NOT FOR TX68PLUS
14	9971910	1	PIN, , FOR TX68PLUS ONLY
15	10516474	1	WASHER, LOCK,
16	79112016	1	NUT, , NOT FOR TX68PLUS
16	15896221	1	NUT, M6, Cl 10, , FOR TX68PLUS ONLY
17	9966662	1	SPRING,
18	9966654	1	LEVER, , NOT FOR TX68PLUS
18	9971907	1	LEVER, , FOR TX68PLUS ONLY
19	79046290	1	WASHER, THK.:0.5MM
20	767581	AR	WASHER, THK.:0.1MM
20	9966663	AR	WASHER, THK.:0.2MM
20	9966664	AR	WASHER, THK.:0.25MM
21	76026122	1	PIN, SPLIT (COTTER),
22	9966655	1	STUD, , NOT FOR TX68PLUS
22	9971908	1	STUD, , FOR TX68PLUS ONLY
23	9970185	1	WASHER,
24	9971906	1	YOKE, , FOR TX68PLUS ONLY

ONLY VALID UNTIL --1076999 (NOT FOR TX68PLUS)

0.14.0(14) INJECTION PUMP

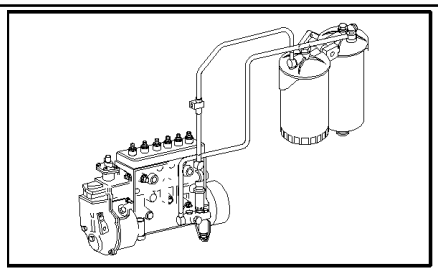

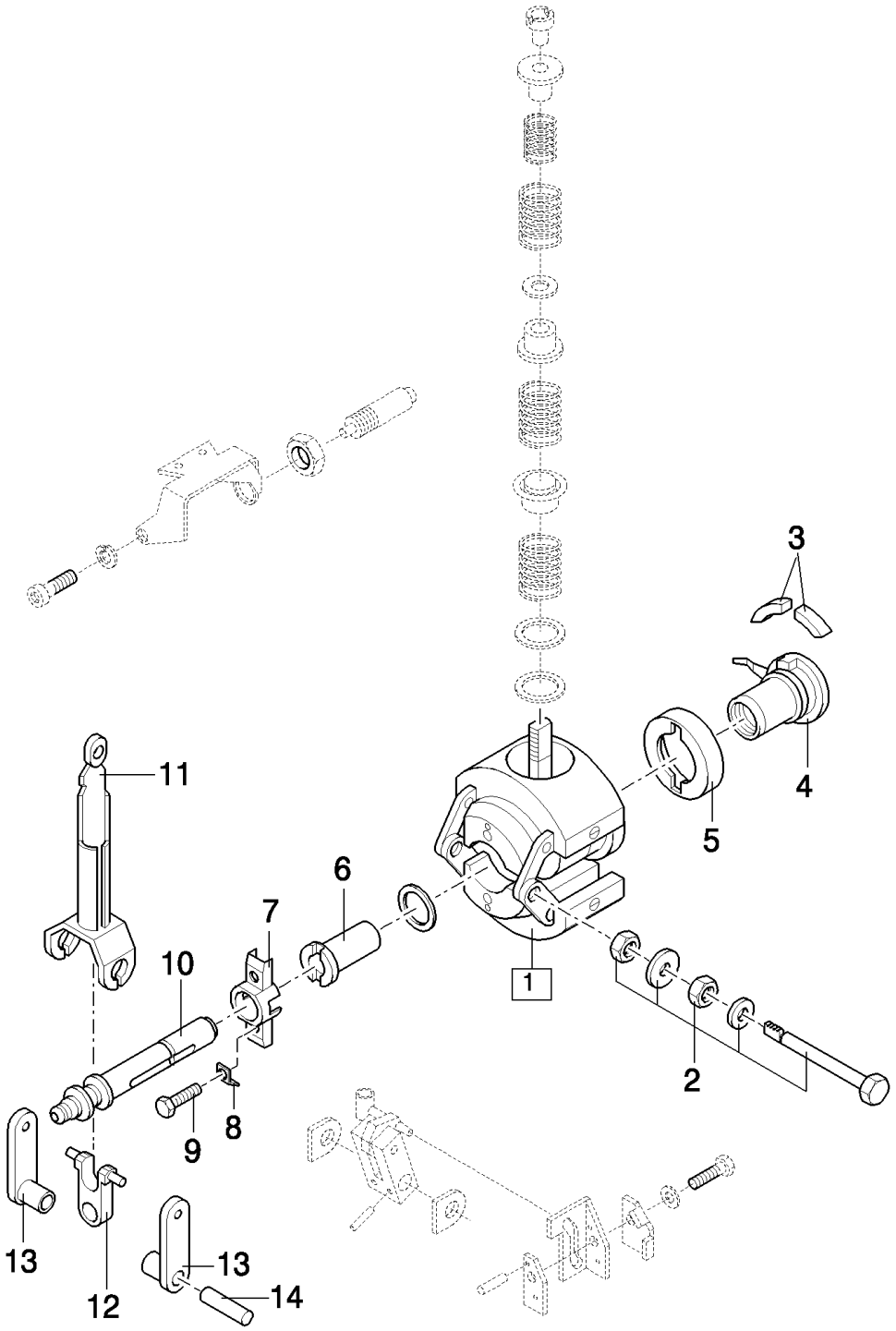

ONLY VALID UNTIL --1076999 (NOT FOR TX68PLUS)

TX68 COMBINE - BASE UNIT

0.14.0(14) INJECTION PUMP

ссылка	Номер детали	Кол-во	Описание
1	9967952	1	KIT,
2	9967954	1	KIT,
3	76026136	4	DAMPER,
4	9967602	1	COUPLING,
5	9967953	1	RING, COUPLING, , NOT FOR TX68PLUS
5	76026138	1	CUP, COVER, , FOR TX68PLUS ONLY
6	76026137	1	COUPLING,
7	79100753	1	DOOR,
8	79023646	2	WASHER,
9	10902224	2	BOLT, Hex, M6 x 16, 8.8, Full Thd, , NOT FOR TX68PLUS
9	71445120	2	SCREW, , FOR TX68PLUS ONLY
10	9966689	1	PIN,
11	9967940	1	YOKE,
12	9966690	1	JOINT, UNIVERSAL,
13	9966691	2	LEVER,
14	9966667	1	PIN, ROLL,

ONLY VALID UNTIL --1076999 (NOT FOR TX68PLUS)

0.14.0(15) INJECTION PUMP

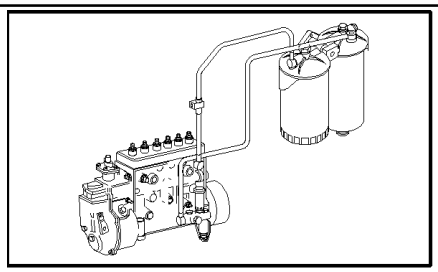

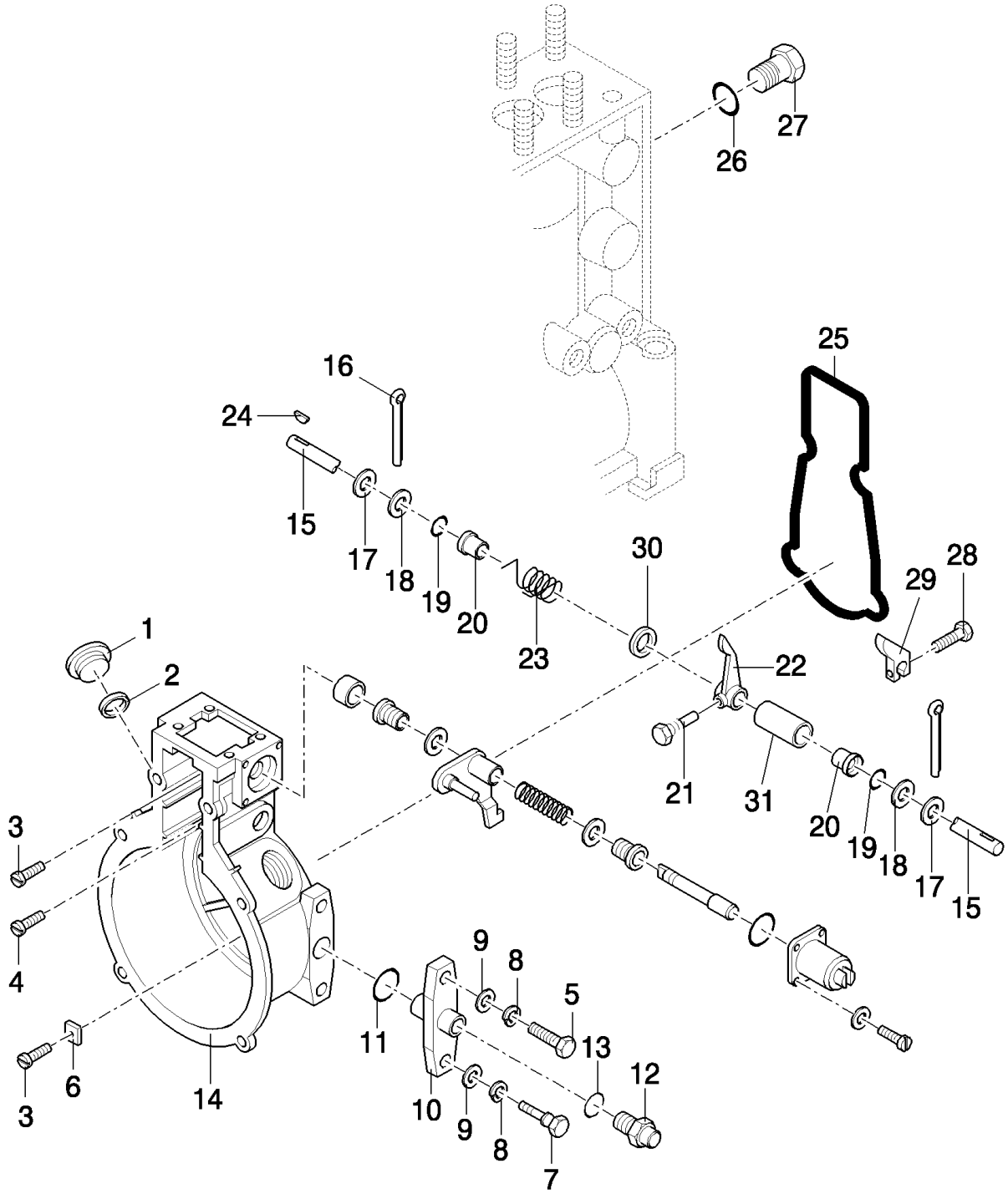

ONLY VALID UNTIL --1076999 (NOT FOR TX68PLUS)

TX68 COMBINE - BASE UNIT

0.14.0(15) INJECTION PUMP

ссылка	Номер детали	Кол-во	Описание
1	1288626	2	PLUG, , NOT FOR TX68PLUS
1	9967280	2	PLUG, , FOR TX68PLUS ONLY
2	9966716	2	GASKET,
3	76030839	2	SCREW,
4	9967582	2	SCREW,
5	9966728	1	SCREW,
6	9967583	4	WASHER, LOCK,
7	9966720	1	SCREW,
8	10516674	2	WASHER, LOCK, 5/16",
9	9967595	2	WASHER,
10	9966718	1	FLANGE, , NOT FOR TX68PLUS
10	75207996	1	FLANGE, , FOR TX68PLUS ONLY
11	9966721	1	GASKET,
12	9966686	1	PLUG,
13	722441	1	GASKET,
14	9967939	1	CASING, , NOT FOR TX68PLUS
14	9969328	1	BOX, , FOR TX68PLUS ONLY
15	9966648	1	SPINDLE, , NOT FOR TX68PLUS
15	9969330	1	SPINDLE, , FOR TX68PLUS ONLY
16	79111848	2	PIN, ROLL, , NOT FOR TX68PLUS
16	79111849	2	PIN, SPLIT (COTTER), , FOR TX68PLUS ONLY
17	1288461	AR	SHIM, , NOT FOR TX68PLUS
18	9966724	2	COLLAR, RETAINER, , NOT FOR TX68PLUS
18	9968709	2	WASHER, 2.15MM, FOR TX68PLUS ONLY
18	9968711	2	WASHER, 2.30MM, FOR TX68PLUS ONLY
18	9968713	2	WASHER, 2.45MM, FOR TX68PLUS ONLY
18	9968712	2	WASHER, 2.60MM, FOR TX68PLUS ONLY
18	9968714	2	WASHER, 2.75MM, FOR TX68PLUS ONLY
18	9968715	2	WASHER, 2.90MM, FOR TX68PLUS ONLY
19	9966709	2	GASKET,
20	9966647	2	BUSHING, , NOT FOR TX68PLUS
20	9969329	2	BUSHING, , FOR TX68PLUS ONLY
21	79039754	1	SCREW,
22	9966649	1	LEVER,
23	9966650	1	SPRING, , NOT FOR TX68PLUS
23	9969331	1	SPRING, , FOR TX68PLUS ONLY
24	1136607	1	KEY,
25	9967591	1	GASKET, , NOT FOR TX68PLUS
25	9969400	1	GASKET, , FOR TX68PLUS ONLY
26	9957969	1	SPACER,
27	9929651	1	PLUG, , NOT FOR TX68PLUS
27	772716	1	PLUG, , FOR TX68PLUS ONLY
28	10902224	1	BOLT, Hex, M6 x 16, 8.8, Full Thd, , NOT FOR TX68PLUS
28	9927750	1	SCREW, , FOR TX68PLUS ONLY

ONLY VALID UNTIL --1076999 (NOT FOR TX68PLUS)

TX68 COMBINE - BASE UNIT

0.14.0(15) INJECTION PUMP

ссылка	Номер детали	Кол-во	Описание
29	9966651	1	LEVER,
30	9968720	2	WASHER, , FOR TX68PLUS ONLY
31	9968721	1	SPACER, , FOR TX68PLUS ONLY

ONLY VALID UNTIL --1076999 (NOT FOR TX68PLUS)

0.14.0(16) INJECTION PUMP

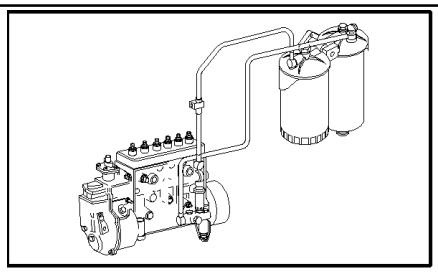

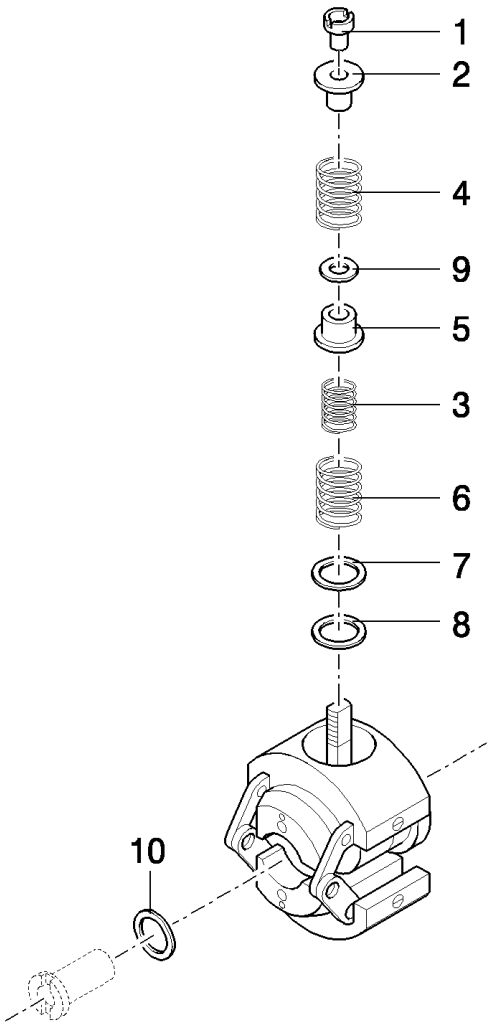

ONLY VALID UNTIL --1076999 (NOT FOR TX68PLUS)

TX68 COMBINE - BASE UNIT

0.14.0(16) INJECTION PUMP

ссылка	Номер детали	Кол-во	Описание
1	79035483	2	NUT,
2	79035484	2	CAP, WASHER,
3	9967416	2	SPRING, , NOT FOR TX68PLUS
3	774420	2	SPRING, , FOR TX68PLUS ONLY
4	9967252	2	SPRING, , NOT FOR TX68PLUS
4	764051	2	SPRING, , FOR TX68PLUS ONLY
5	76026120	2	PLATE, , NOT FOR TX68PLUS
5	774421	2	CAP, WASHER, , FOR TX68PLUS ONLY
6	9967417	2	, NOT FOR TX68PLUS
6	76034136	2	SPRING, , FOR TX68PLUS ONLY
7	9966653	4	WASHER, THK.:0.30MM, NOT FOR TX68PLUS
7	4935634	4	WASHER, , FOR TX68PLUS ONLY
8	76026121	AR	WASHER, THK.:0.50MM
9	79023644	2	WASHER, LOCK,
10	772532	1	WASHER, THK.:1.60MM
10	79062771	1	WASHER, THK.:1.63MM
10	79062772	1	WASHER, THK.:1.66MM
10	79062773	1	WASHER, THK.:1.69MM
10	79062774	1	WASHER, THK.:1.72MM
10	79062775	1	WASHER, THK.:1.75MM
10	79062776	1	WASHER, THK.:1.78MM
10	79062777	1	WASHER, THK.:1.81MM
10	79062778	1	WASHER, THK.:1.84MM
10	79062779	1	WASHER, THK.:1.87MM
10	79062780	1	WASHER, THK.:1.90MM
10	79062781	1	WASHER, THK.:1.93MM
10	79062782	1	WASHER, THK.:1.96MM
10	79062783	1	WASHER, THK.:1.99MM
10	79062784	1	WASHER, THK.:2.02MM
10	79062785	1	WASHER, THK.:2.05MM
10	79062786	1	WASHER, THK.:2.08MM
10	79023699	1	WASHER, THK.:2.11MM
10	79062788	1	WASHER, THK.:2.14MM

ONLY VALID UNTIL --1076999 (NOT FOR TX68PLUS)

0.14.0(17) INJECTION PUMP

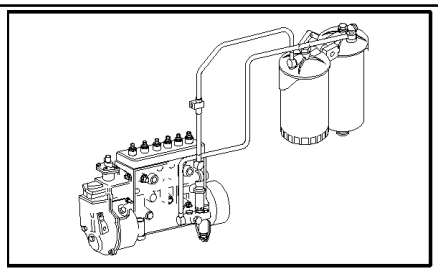

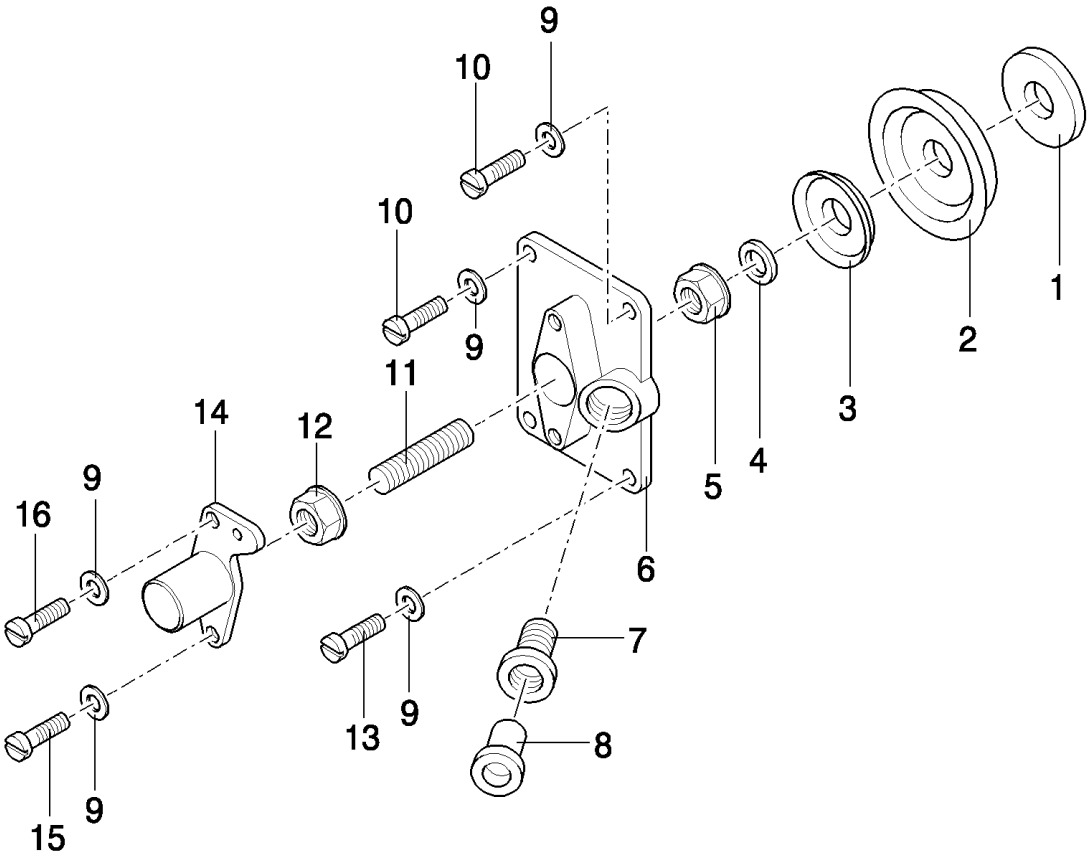

ONLY VALID UNTIL --1076999 (NOT FOR TX68PLUS)

TX68 COMBINE - BASE UNIT

0.14.0(17) INJECTION PUMP

ссылка	Номер детали	Кол-во	Описание
1	71445103	1	WASHER,
2	9966699	1	MEMBRANE,
3	71445103	1	WASHER,
4	71445106	1	WASHER, , NOT FOR TX68PLUS
4	9963377	1	WASHER, LOCK, , FOR TX68PLUS ONLY
5	9966700	1	NUT,
6	9966701	1	COVER,
7	9966702	1	BUSHING, THREADED,
8	79033453	1	PLUG,
9	10571574	4	WASHER, LOCK, , NOT FOR TX68PLUS
9	10516474	4	WASHER, LOCK, , FOR TX68PLUS ONLY
10	10376724	3	SCREW, Slotted, Pan Hd, M6 x 16, , NOT FOR TX68PLUS
10	10376711	4	SCREW, , FOR TX68PLUS ONLY
11	79048248	1	STUD,
12	42488393	1	NUT,
13	79033447	1	SCREW, , NOT FOR TX68PLUS
14	9966703	1	COVER,
15	9956542	1	SCREW,
16	9966710	1	SCREW, , NOT FOR TX68PLUS
16	71452950	1	SCREW, , FOR TX68PLUS ONLY

ONLY VALID UNTIL --1076999 (NOT FOR TX68PLUS)

0.14.0(18) INJECTION PUMP

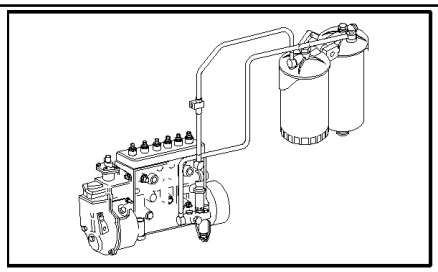

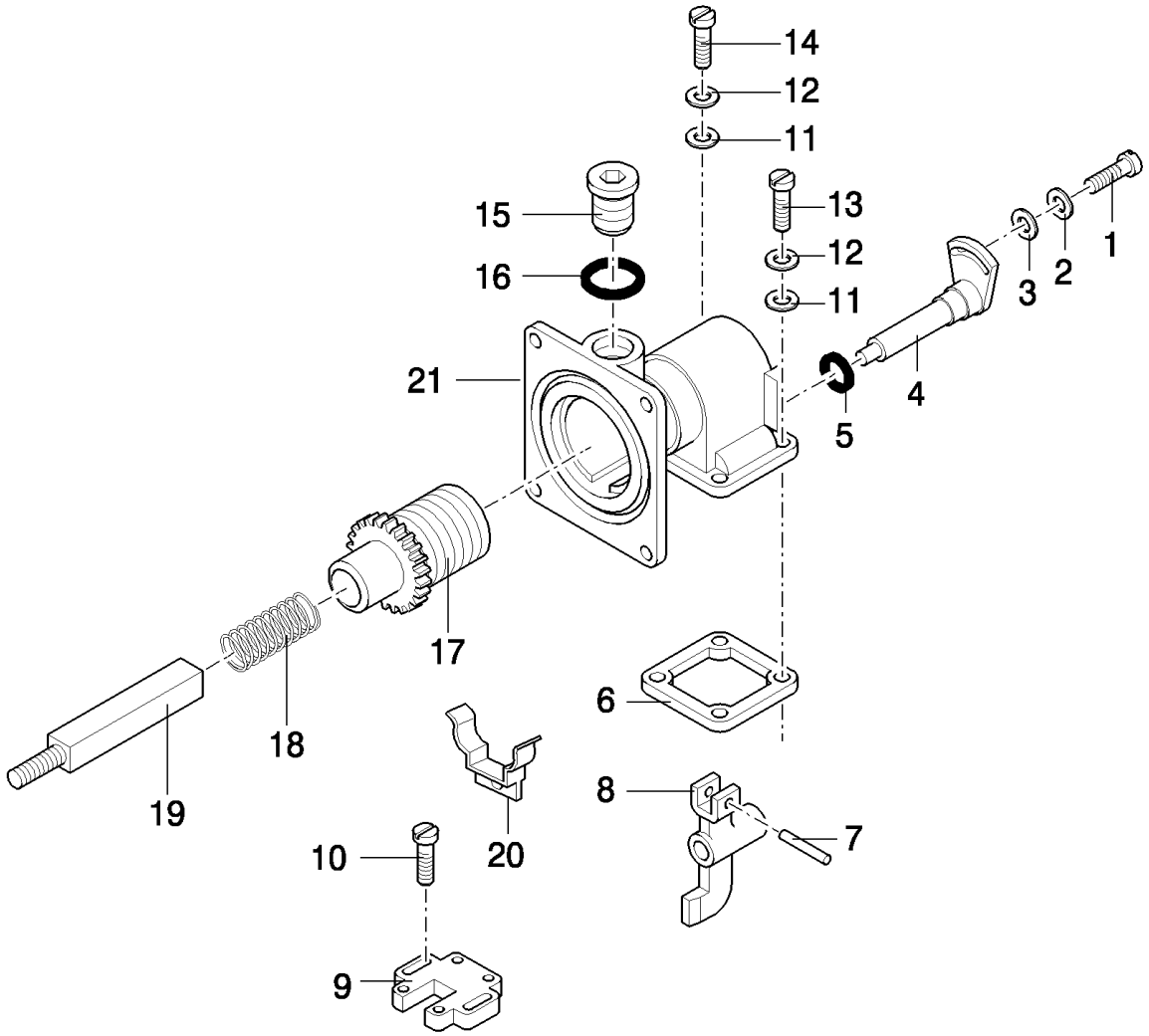

ONLY VALID UNTIL --1076999 (NOT FOR TX68PLUS)

TX68 COMBINE - BASE UNIT

0.14.0(18) INJECTION PUMP

ссылка	Номер детали	Кол-во	Описание
1	9966708	1	SCREW, , NOT FOR TX68PLUS
1	10902024	1	BOLT, Hex, M6 x 12, 8.8, Full Thd, , FOR TX68PLUS ONLY
2	10571574	7	WASHER, LOCK, , NOT FOR TX68PLUS
2	10516474	7	WASHER, LOCK, , FOR TX68PLUS ONLY
3	14496404	1	WASHER, LOCK,
4	9966707	1	CAMSHAFT,
5	9966709	1	GASKET,
6	9966712	1	GASKET, , NOT FOR TX68PLUS
6	9966711	1	GASKET, , FOR TX68PLUS ONLY
7	9966706	1	PIN, ROLL,
8	9967950	1	LEVER,
9	9967948	1	STOP, , NOT FOR TX68PLUS
9	9971914	1	, FOR TX68PLUS ONLY
10	10376511	1	SCREW, , NOT FOR TX68PLUS
10	9971913	1	SCREW, , FOR TX68PLUS ONLY
11	14496404	4	WASHER, LOCK,
12	10516474	4	WASHER, LOCK,
13	9966693	2	SCREW, , NOT FOR TX68PLUS
13	9969342	2	SCREW, , FOR TX68PLUS ONLY
14	10376811	2	SCREW, Slotted, Pan Hd, M6 x 18, 5.8,
15	9966704	1	PLUG,
16	76030848	1	GASKET,
17	79097280	1	BUSHING,
18	9967949	1	SPRING,
19	9966698	1	ROD,
20	9033457	1	SPRING, , FOR TX68PLUS ONLY
21	9969341	1	CASING, , FOR TX68PLUS ONLY

ONLY VALID UNTIL --1076999 (NOT FOR TX68PLUS)

0.20.0(01) FUEL FILTER (NOT FOR TX68PLUS)

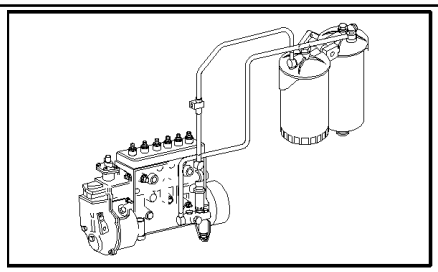

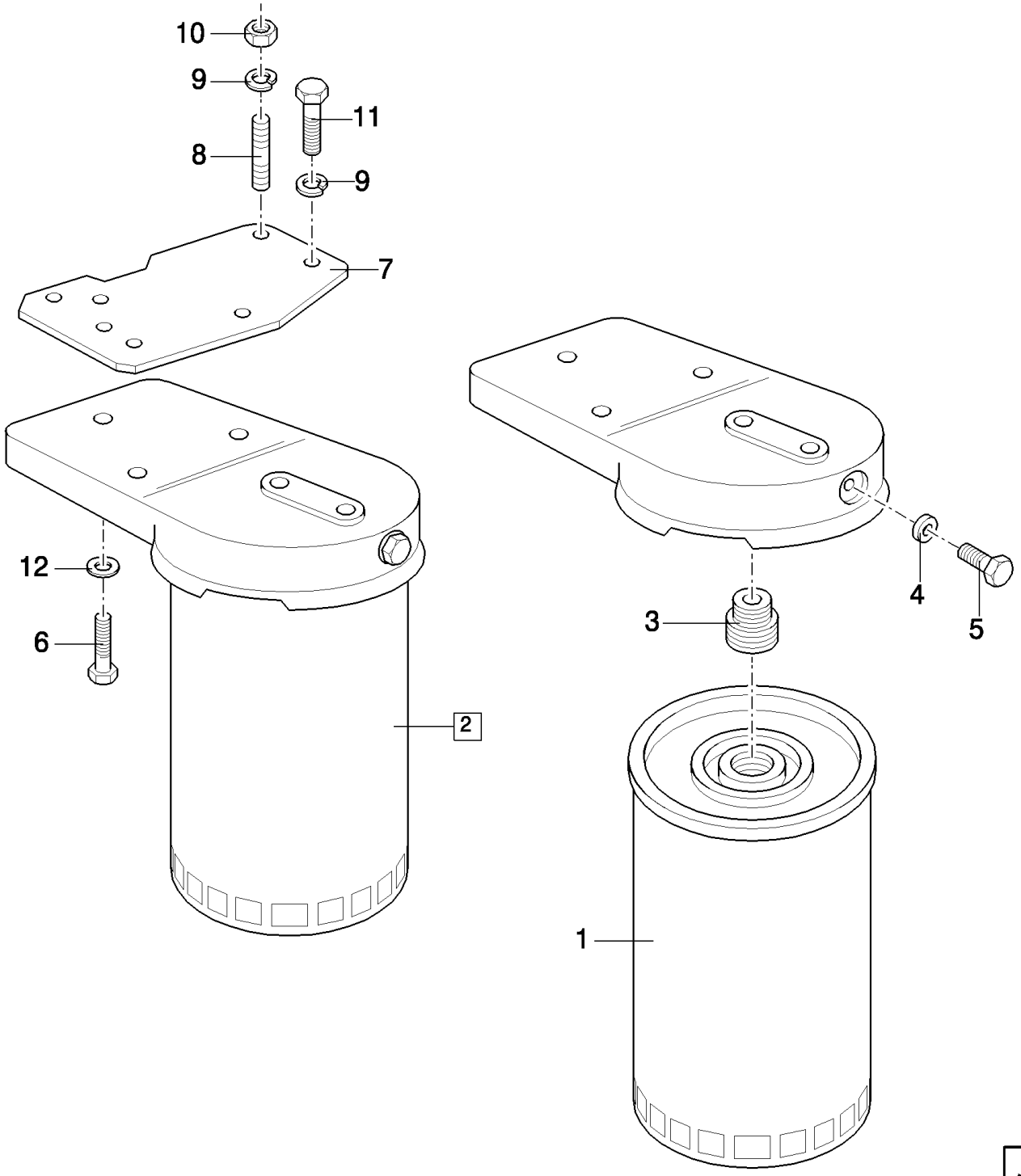

ONLY VALID UNTIL --1076999

TX68 COMBINE - BASE UNIT

0.20.0(01) FUEL FILTER (NOT FOR TX68PLUS)

ссылка	Номер детали	Кол-во	Описание
1	1909103	1	FILTER, FUEL,
2	4802377	1	FILTER, FUEL, (1,3 to 5)
3	4626466	1	CONNECTOR, HYD.,
4	10297760	1	WASHER, COPPER, M6.2 x 12 x 1, Copper,
5	4807219	1	SCREW,
6	15970921	3	BOLT, Hex, M10 x 1.25 x 35, 8.8, Full Thd,
7	8014783	1	BRACKET, , FOR ENGINE TYPE 8460 SRI 10 00 A 007
7	61321565	1	SUPPORT, , FOR ENGINE TYPE 8465 SRI 10 00 A 001
8	13516624	3	STUD, M8x16
9	11193874	4	WASHER, SPRING, Belleville, M8.4,
10	16100821	3	NUT, M8, Cl 10,
11	16043424	1	SCREW, Hex, M8 x 20, 8.8, Full Thd,
11	16204524	1	BOLT, Hex, M10 x 35,
12	11190574	3	WASHER, SPRING, Belleville, M10.5,

ONLY VALID UNTIL --1076999

0.20.0/1(01) FUEL FILTER - TX68PLUS

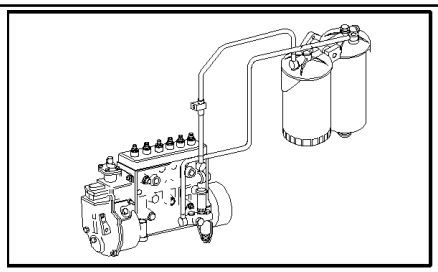

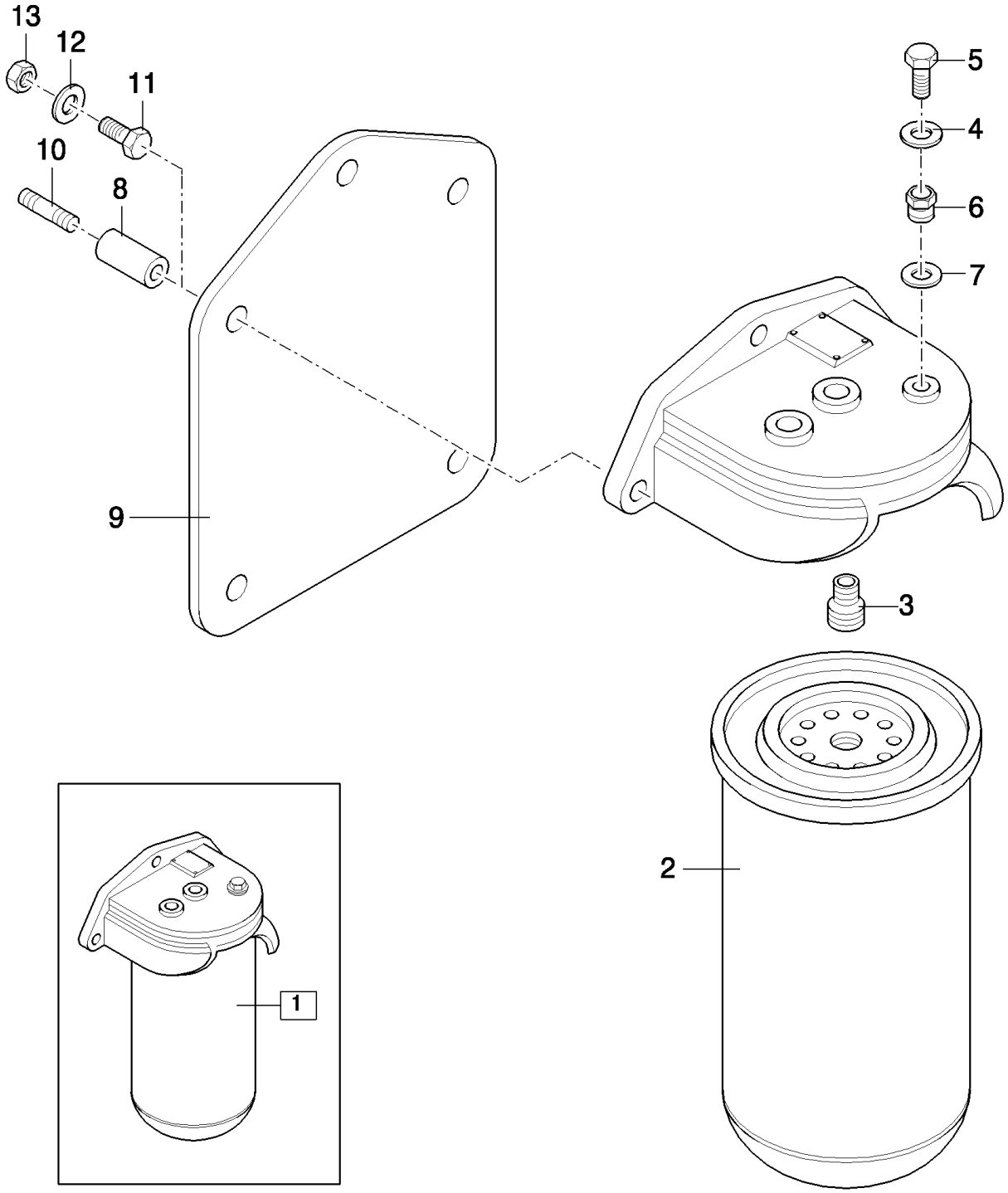

TX68 COMBINE - BASE UNIT

0.20.0/1(01) FUEL FILTER - TX68PLUS

ссылка	Номер детали	Кол-во	Описание
1	4618309	1	FILTER, FUEL, (2 to 7)
2	1909103	1	FILTER, FUEL,
3	4626466	1	CONNECTOR, HYD.,
4	10297760	1	WASHER, COPPER, M6.2 x 12 x 1, Copper,
5	4807219	1	SCREW,
6	4790610	1	CONNECTOR, HYD.,
7	2854292	1	SEAL WASHER,
8	8019966	2	SPACER,
9	8019965	1	SUPPORT,
10	16748824	1	STUD,
11	11307024	2	BOLT, Hex, M10 x 1.25 x 40, 8.8, Full Thd,
12	11190574	3	WASHER, SPRING, Belleville, M10.5,
13	15500121	3	NUT, M10

0.20.3(01) FUEL LINES

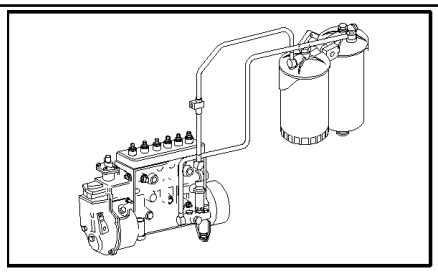

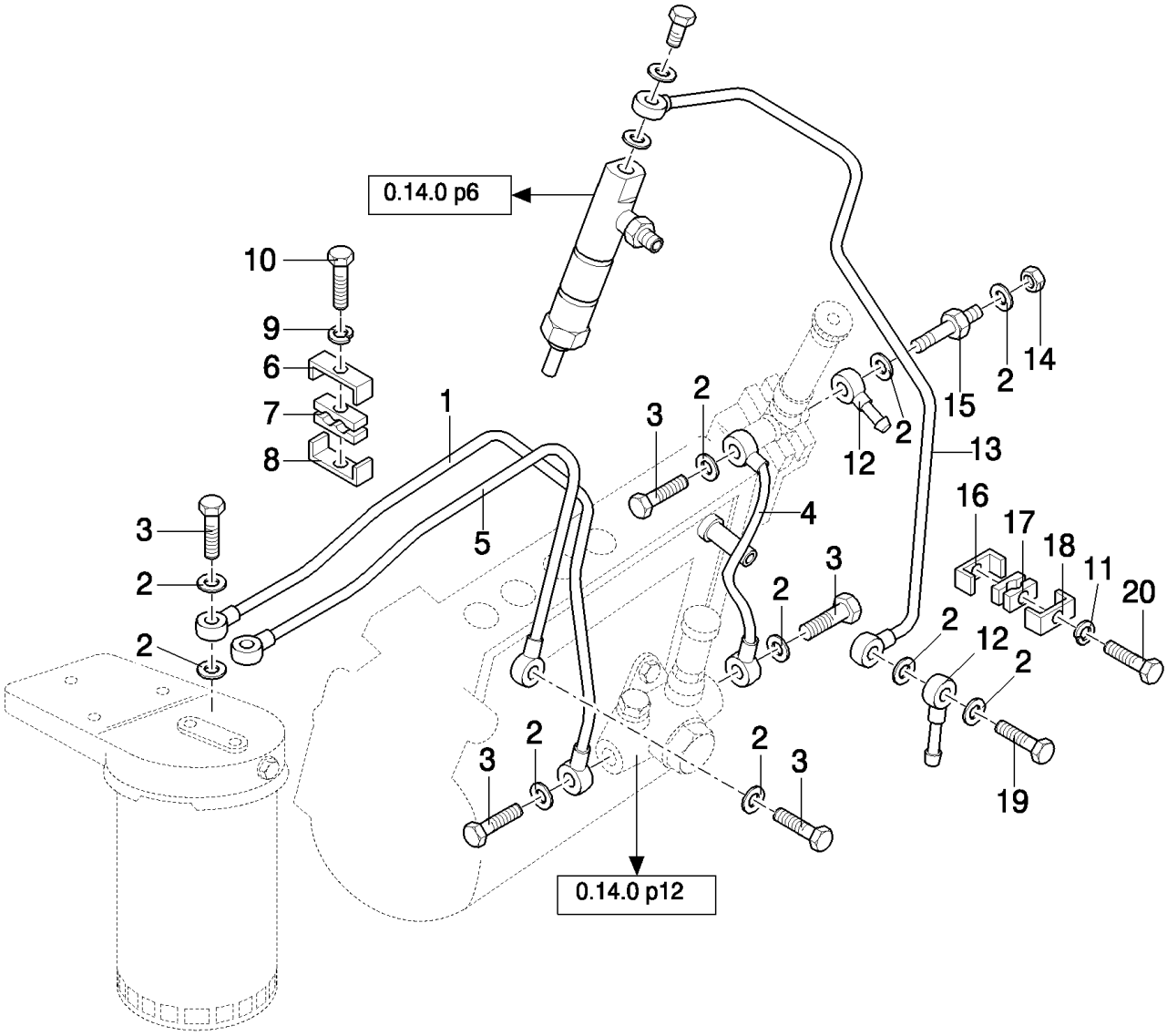

TX68 COMBINE - BASE UNIT

0.20.3(01) FUEL LINES

ссылка	Номер детали	Кол-во	Описание
1	8013920	1	TUBE, RIGID, , FOR ENGINE TYPE 8460 SRI 10 00 A 007
1	61321570	1	TUBE, RIGID, , FOR ENGINE TYPE 8465 SRI 10 00 A 001
1	8016537	1	TUBE, RIGID, , FOR TX68PLUS ONLY
2	98474308	16	WASHER, SEALING,
3	4864083	12	BOLT, BANJO,
4	8014983	1	TUBE, RIGID,
5	8013921	1	TUBE, RIGID, , FOR ENGINE TYPE 8460 SRI 10 00 A 007
5	61321571	1	TUBE, RIGID, , FOR ENGINE TYPE 8465 SRI 10 00 A 001
5	8016538	1	TUBE, RIGID, , FOR TX68PLUS ONLY
6	4644288	2	COLLAR, RETAINER,
7	4871771	1	CLIP, HOSE,
8	4644289	1	COLLAR, RETAINER,
9	11197774	1	WASHER, SPRING, Belleville, M6.4,
11	14496301	1	WASHER,
12	98417703	2	CONNECTION, SWIVEL,
13	8016138	1	TUBE, RIGID, , NOT FOR TX68PLUS
14	10182817	1	BOLT, BANJO, Banjo, M14 x 1.5, 2-Way, , FOR ENGINE TYPE 8460 SRI 10 00 A 007
15	10181211	1	BOLT, BANJO,
16	4641874	1	CLAMP,
17	4592280	1	CLIP, HOSE,
18	4703602	1	CLAMP,
19	61320123	1	BOLT, BANJO,
20	16602124	1	SCREW,
10	10902624	1	BOLT, Hex, M6 x 25, 8.8, Full Thd,

ONLY VALID UNTIL --1076999 (NOT FOR TX68PLUS)

0.20.3(02) FUEL PUMP

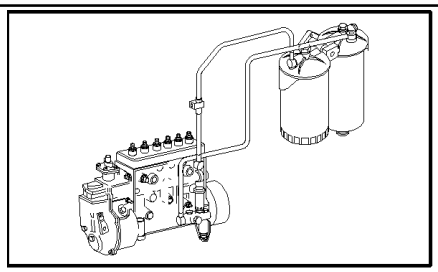

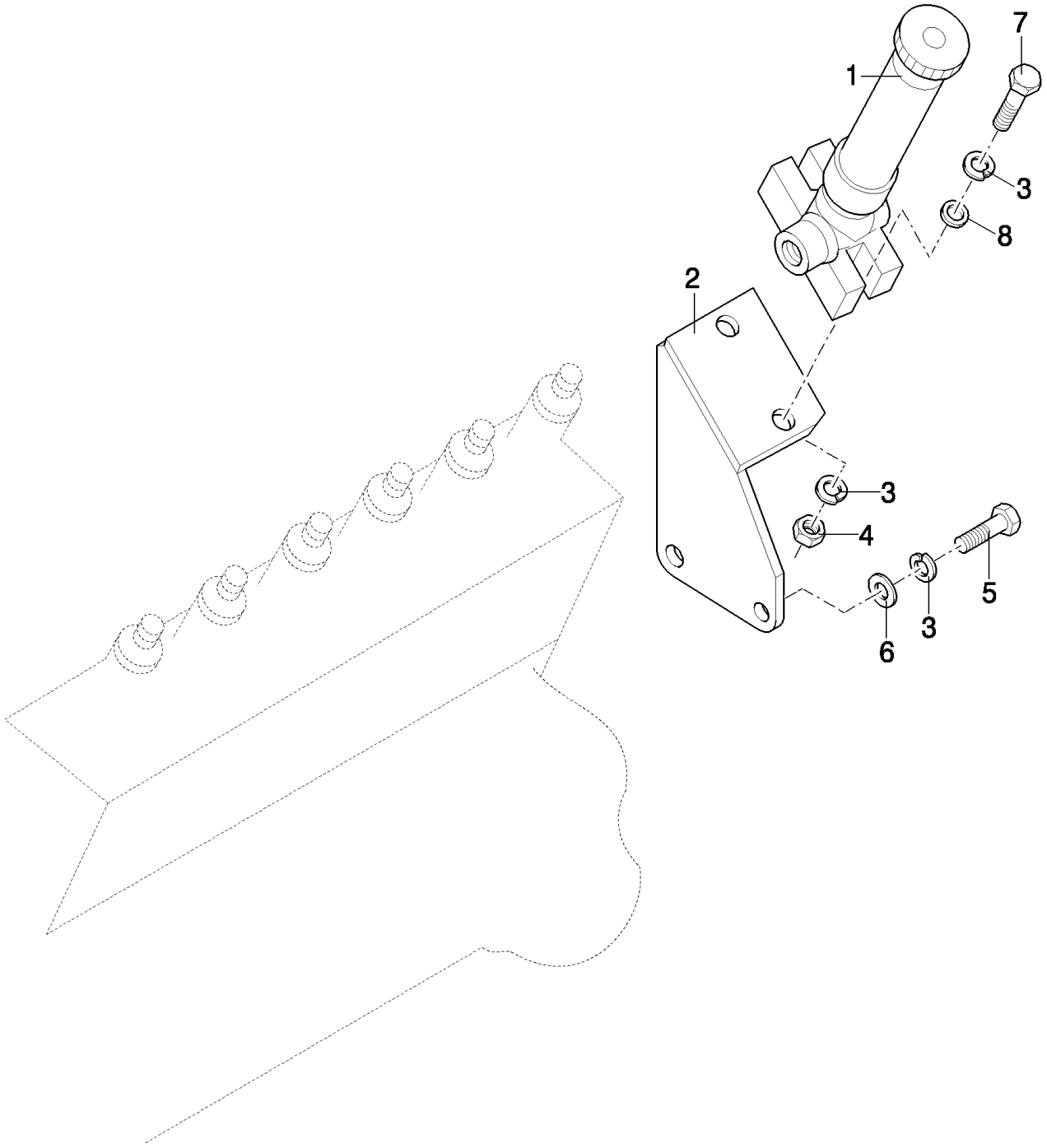

ONLY VALID UNTIL --1076999 (NOT FOR TX68PLUS)

TX68 COMBINE - BASE UNIT

0.20.3(02) FUEL PUMP

ссылка	Номер детали	Кол-во	Описание
1	4797319	1	PUMP, FUEL,
2	8010449	1	SUPPORT,
3	11197774	6	WASHER, SPRING, Belleville, M6.4,
4	15896221	2	NUT, M6, Cl 10,
5	10902024	2	BOLT, Hex, M6 x 12, 8.8, Full Thd,
6	14496404	2	WASHER, LOCK,
7	10902824	2	BOLT, Hex, M6 x 30, 8.8,
8	12643724	2	WASHER,

ONLY VALID UNTIL --1076999 (NOT FOR TX68PLUS)

0.24.0(01) TURBOCHARGER (NOT FOR TX68PLUS)

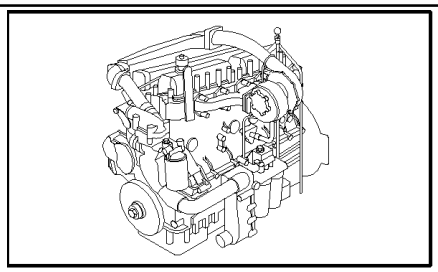

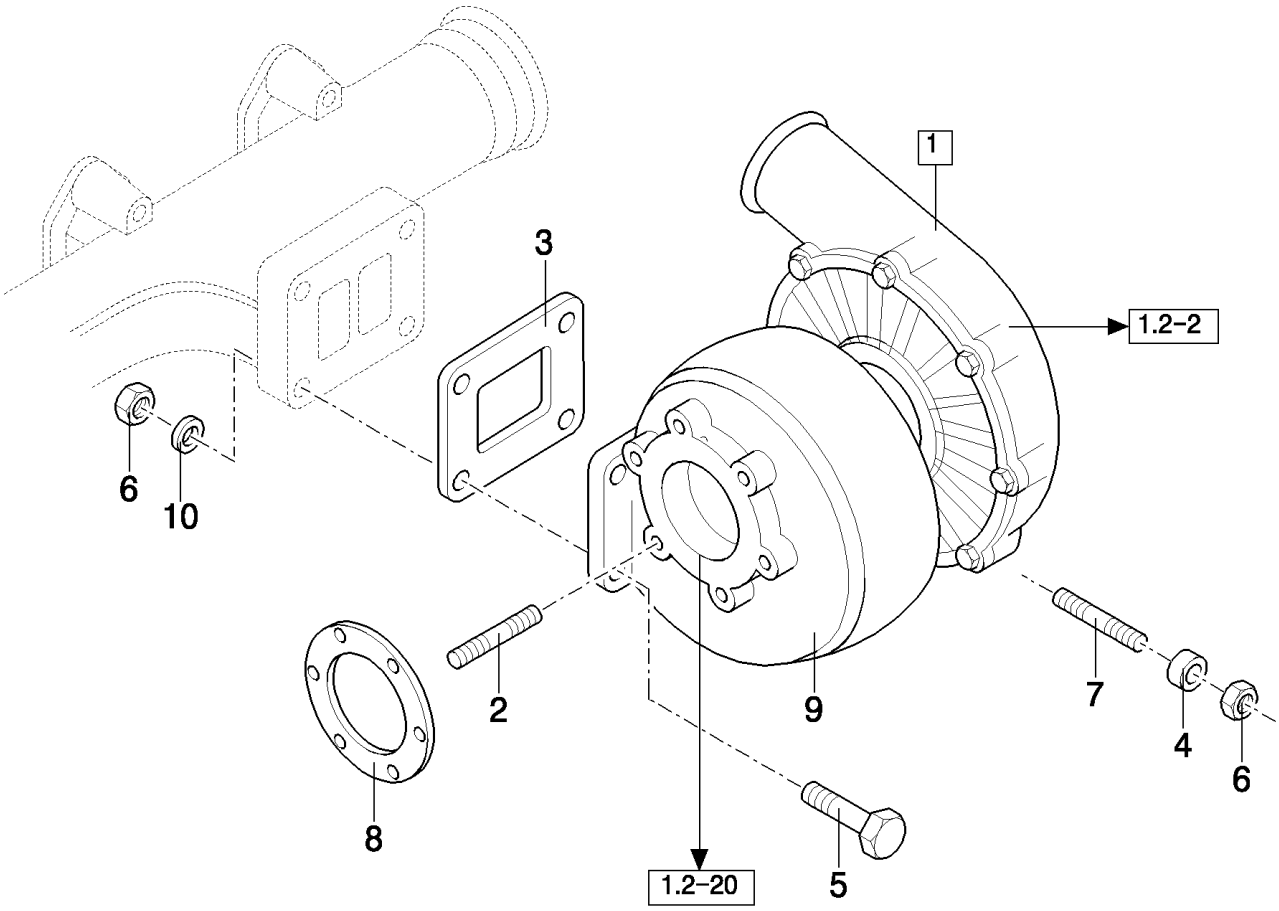

TX68 COMBINE - BASE UNIT

0.24.0(01) TURBOCHARGER (NOT FOR TX68PLUS)

ссылка	Номер детали	Кол-во	Описание
1	8012510	1	TURBOCHARGER, (9), FOR ENGINE TYPE 8460 SRI 10 00 A 007
1	61321573	1	TURBOCHARGER, (9), FOR ENGINE TYPE 8465 SRI 10 00 A 001
2	13517224	6	STUD,
3	61317796	1	GASKET, , FOR ENGINE TYPE 8460 SRI 10 00 A 007
4	61315495	1	SPACER,
5	61318963	3	SCREW, M10x43
6	13678321	4	NUT,
7	61321158	1	STUD,
8	4772331	1	GASKET,
9	9967421	1	KIT, REPAIR, , FOR ENGINE TYPE 8460 SRI 10 00 A 007
9	61317798	1	KIT, REPAIR, , FOR ENGINE TYPE 8465 SRI 10 00 A 001
10	14499521	3	WASHER, M10x18

ONLY VALID UNTIL --1076999

0.24.0(01A) TURBOCHARGER - TX68PLUS

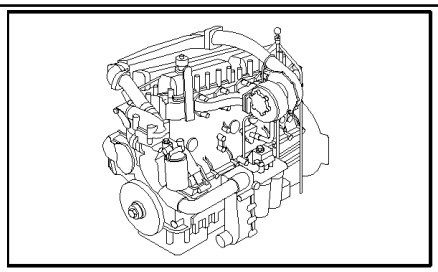

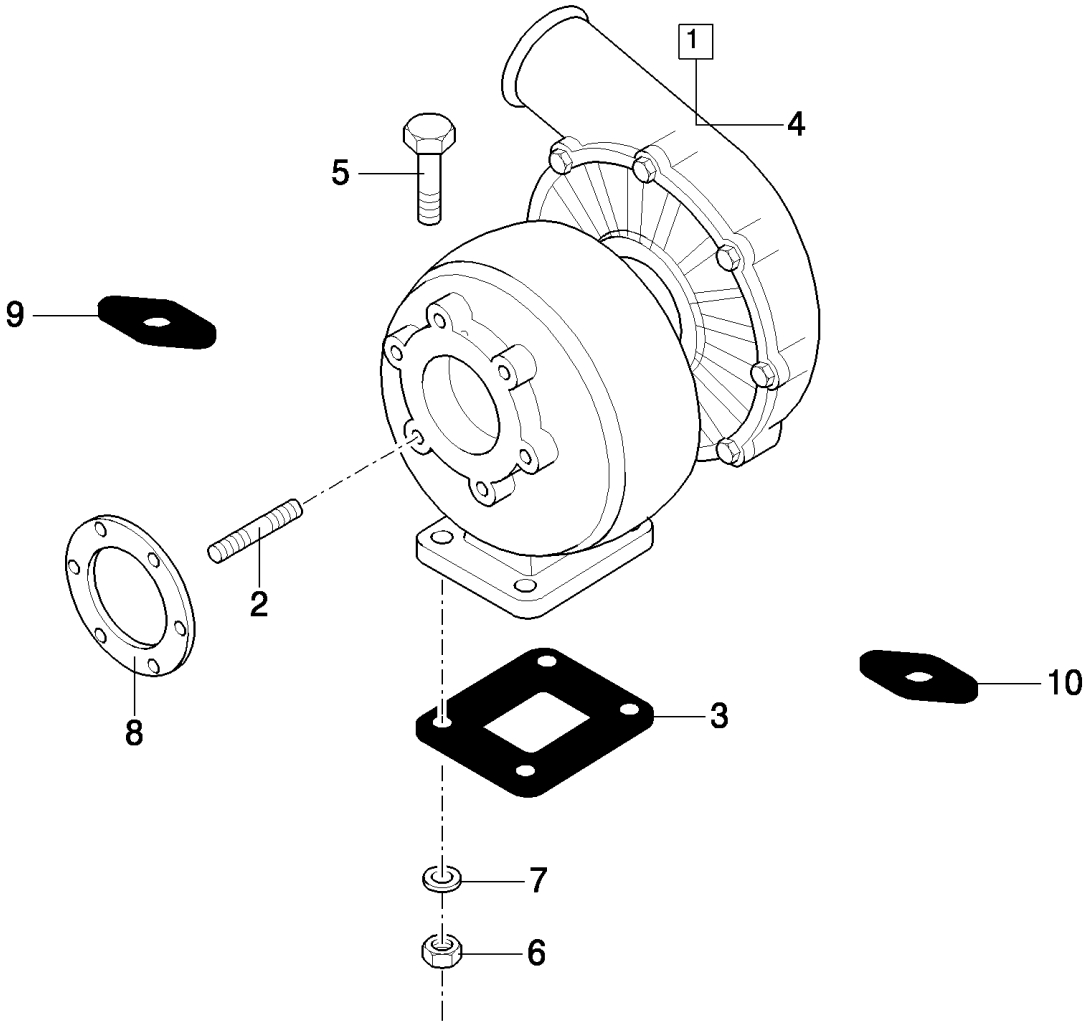

TX68 COMBINE - BASE UNIT

0.24.0(01A) TURBOCHARGER - TX68PLUS

ссылка	Номер детали	Кол-во	Описание
1	8020804	1	TURBOCHARGER,
2	13517224	6	STUD,
3	61317796	1	GASKET,
4	61317798	1	KIT, REPAIR, (3,9,10)
5	500382135	4	SCREW,
6	13680121	4	NUT,
7	14499521	1	WASHER,
8	4772331	1	GASKET,
9	61318303	1	GASKET,
10	98412509	1	GASKET,

0.24.0(02) LUBE OIL LINES (NOT FOR TX68PLUS)

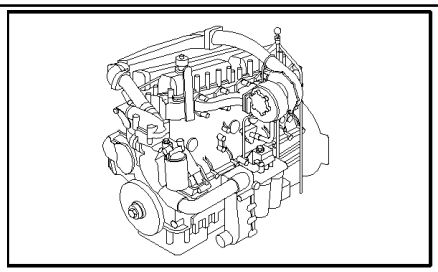

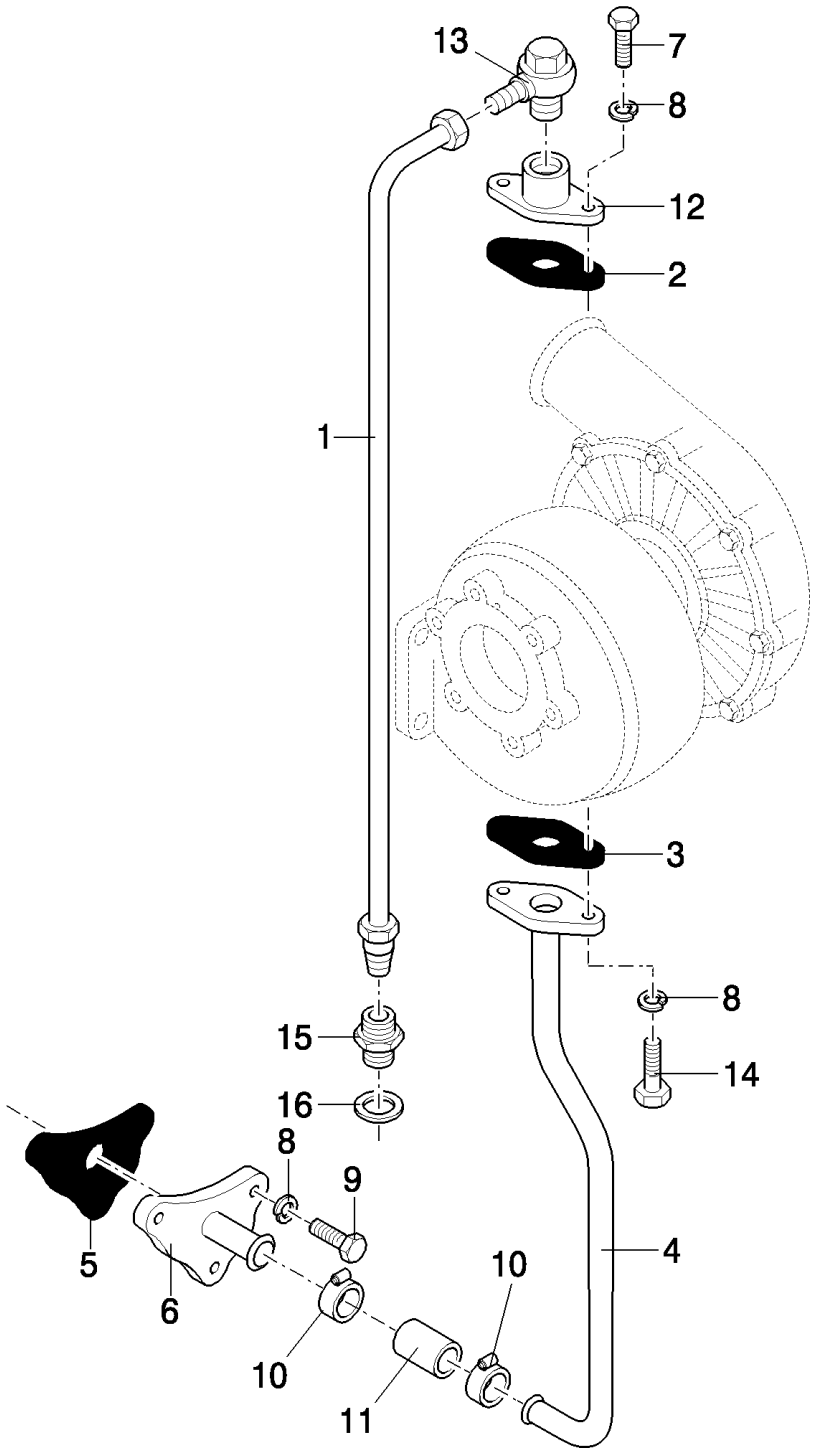

TX68 COMBINE - BASE UNIT

0.24.0(02) LUBE OIL LINES (NOT FOR TX68PLUS)

ссылка	Номер детали	Кол-во	Описание
1	8013919	1	TUBE, RIGID, , FOR ENGINE TYPE 8460 SRI 10 00 A 007
1	61321588	1	TUBE, RIGID, , FOR ENGINE TYPE 8465 SRI 10 00 A 001
2	61318303	1	GASKET,
3	61317794	1	GASKET,
4	8013918	1	TUBE, RIGID, , FOR ENGINE TYPE 8460 SRI 10 00 A 007
4	61321589	1	TUBE, RIGID, , FOR ENGINE TYPE 8465 SRI 10 00 A 001
5	61319047	1	GASKET,
6	61319139	1	PLATE,
7	14306324	2	SCREW, Hex Soc Hd, M8 x 20, 8.8,
8	11193874	7	WASHER, SPRING, Belleville, M8.4,
9	16043424	3	SCREW, Hex, M8 x 20, 8.8, Full Thd, , FOR ENGINE TYPE 8460 SRI 10 00 A 007
10	13000490	2	CLAMP, HOSE, , FOR ENGINE TYPE 8460 SRI 10 00 A 007
11	98425459	1	HOSE, , FOR ENGINE TYPE 8460 SRI 10 00 A 007
12	61318299	1	FLANGE,
13	61608071	1	CONNECTOR, HYD.,
14	16043524	2	BOLT, Hex, M8 x 22, 8.8, Full Thd,
15	16500311	1	BOLT, BANJO, , FOR ENGINE TYPE 8460 SRI 10 00 A 007
15	16500311	2	BOLT, BANJO, , FOR ENGINE TYPE 8465 SRI 10 00 A 001
16	4858609	1	O-RING, , FOR ENGINE TYPE 8460 SRI 10 00 A 007
16	4858609	2	O-RING, , FOR ENGINE TYPE 8465 SRI 10 00 A 001

ONLY VALID UNTIL --1076999

0.24.0(02A) LUBE OIL LINES - TX68PLUS

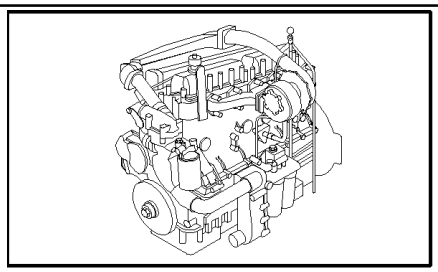

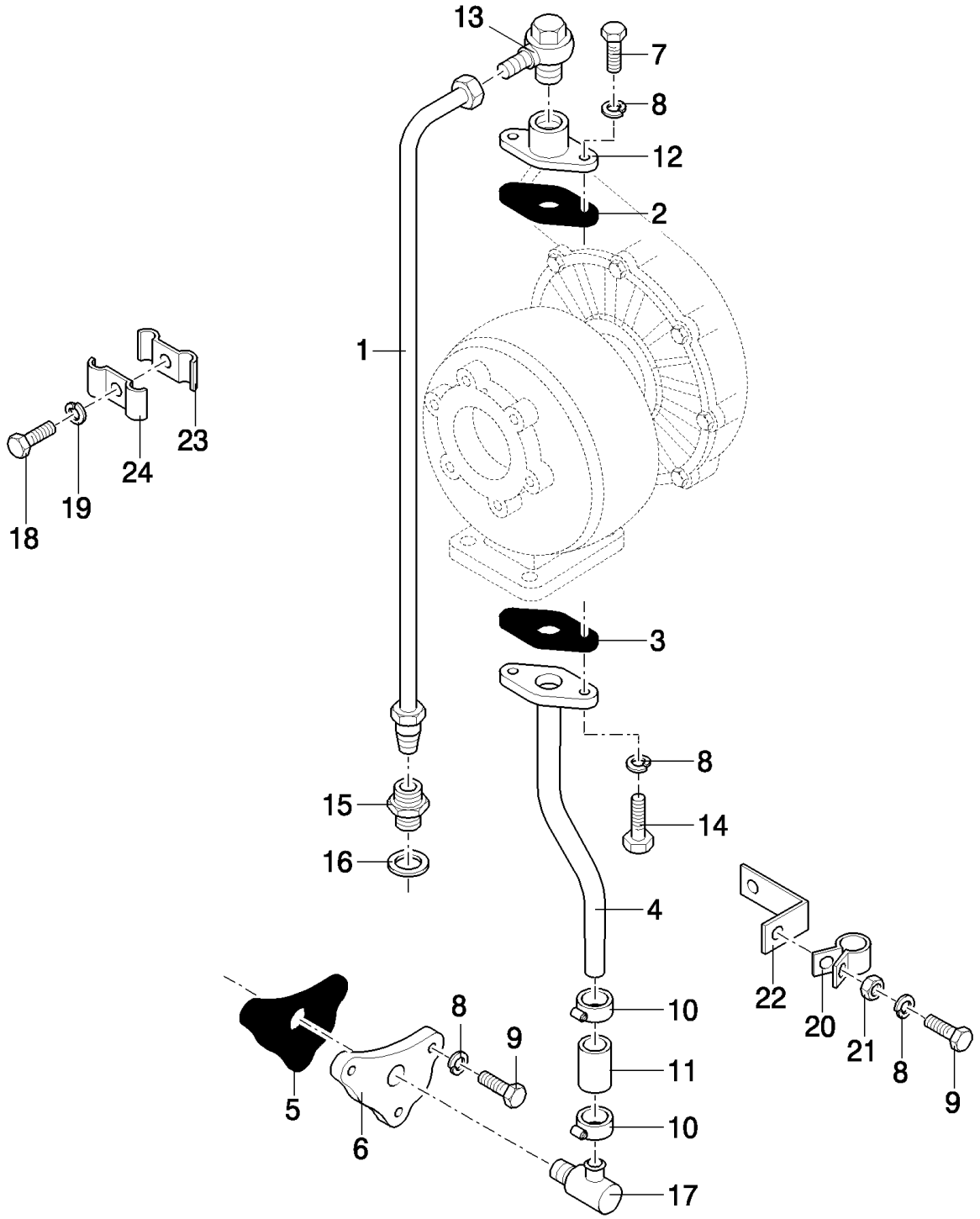

TX68 COMBINE - BASE UNIT

0.24.0(02A) LUBE OIL LINES - TX68PLUS

ссылка	Номер детали	Кол-во	Описание
1	8019986	1	TUBE, RIGID,
2	61318303	1	GASKET,
3	98412509	1	GASKET,
4	8019987	1	TUBE, RIGID,
5	61319047	1	GASKET,
6	8019988	1	FLANGE,
7	14306321	2	SCREW, Hex Soc Hd, M8 x 20, 8.8,
8	11193874	9	WASHER, SPRING, Belleville, M8.4,
9	16043424	5	SCREW, Hex, M8 x 20, 8.8, Full Thd,
10	13000490	2	CLAMP, HOSE,
11	98425459	1	HOSE,
12	61317762	1	FLANGE,
13	61608071	1	CONNECTOR, HYD.,
14	16043524	2	BOLT, Hex, M8 x 22, 8.8, Full Thd,
15	16500311	1	BOLT, BANJO,
16	4858609	1	O-RING,
17	61317203	1	CONNECTOR, HYD.,
19	11197774	1	WASHER, SPRING, Belleville, M6.4,
20	4763804	1	RETAINER,
21	16100821	2	NUT, M8, Cl 10,
22	8112082	1	BRACKET,
23	4755436	1	COLLAR, RETAINER,
24	4755435	1	COLLAR, RETAINER,
18	10902624	1	BOLT, Hex, M6 x 25, 8.8, Full Thd,

0.24.3(01) SUPERCHARGING LINES (NOT FOR TX68PLUS)

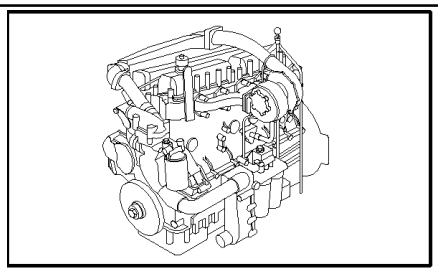

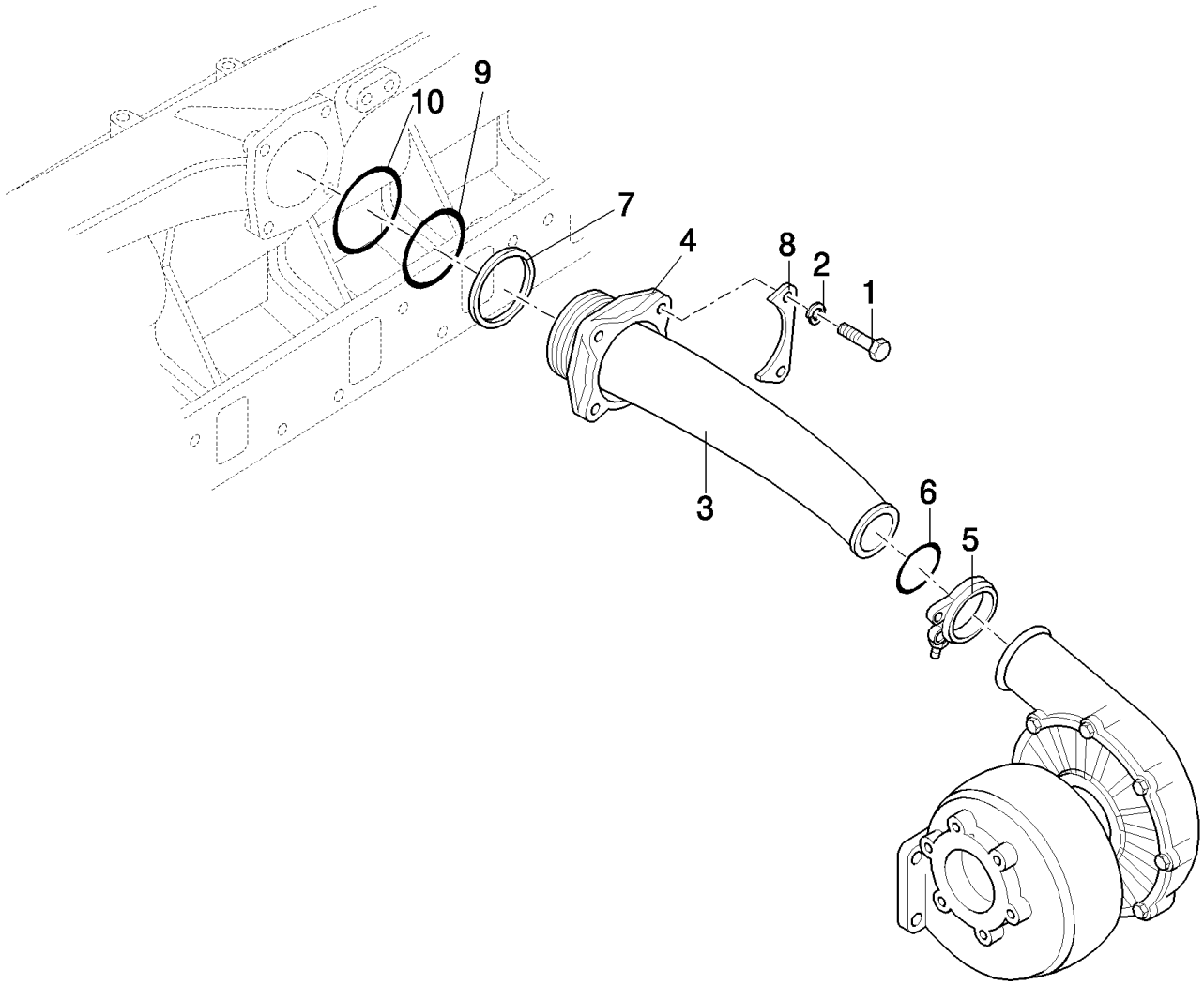

ONLY VALID UNTIL --1076999

TX68 COMBINE - BASE UNIT

0.24.3(01) SUPERCHARGING LINES (NOT FOR TX68PLUS)

ссылка	Номер детали	Кол-во	Описание
1	16044031	4	BOLT, Hex, M8 x 40, 10.9,
2	11193874	4	WASHER, SPRING, Belleville, M8.4,
3	8015775	1	TUBE, RIGID, , FOR ENGINE TYPE 8460 SRI 10 00 A 007
3	61321576	1	TUBE, RIGID, , FOR ENGINE TYPE 8465 SRI 10 00 A 001
4	8105950	1	FLANGE, , FOR ENGINE TYPE 8460 SRI 10 00 A 007
4	61321577	1	FLANGE, , FOR ENGINE TYPE 8465 SRI 10 00 A 001
5	4800661	1	CLAMP, HOSE,
6	17284681	1	GASKET,
7	8105951	1	O-RING, , FOR ENGINE TYPE 8460 SRI 10 00 A 007
7	61321578	1	RING, , FOR ENGINE TYPE 8465 SRI 10 00 A 001
8	8105952	2	PLATE, , FOR ENGINE TYPE 8460 SRI 10 00 A 007
8	61321579	2	PLATE, , FOR ENGINE TYPE 8465 SRI 10 00 A 001
9	17291281	1	GASKET,
10	14465381	1	O-RING, -235, Cl 7, 3.109" ID x .139" Thk,

ONLY VALID UNTIL --1076999

0.24.3/1(01) SUPERCHARGING LINES - TX68PLUS

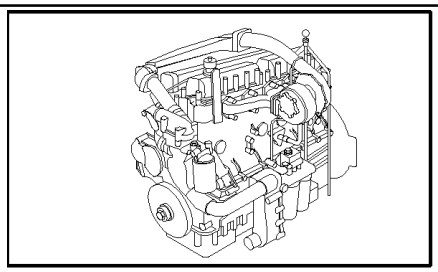

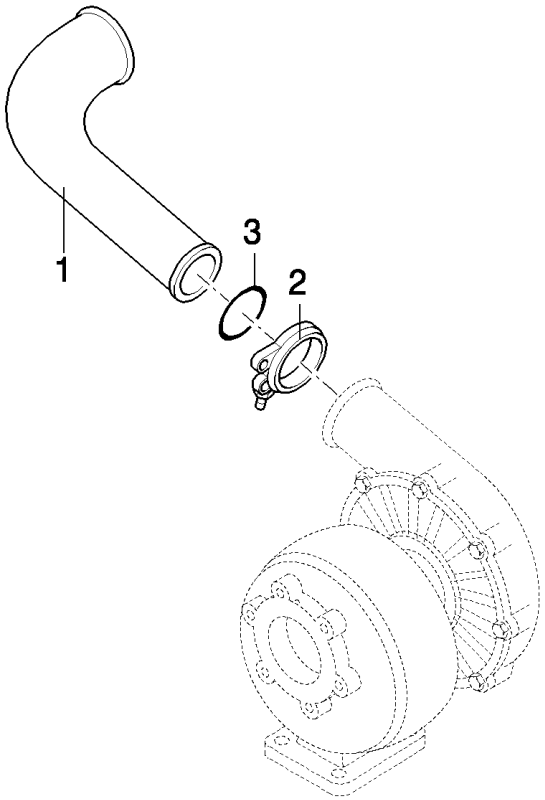

TX68 COMBINE - BASE UNIT

0.24.3/1(01) SUPERCHARGING LINES - TX68PLUS

ссылка	Номер детали	Кол-во	Описание
1	61318365	1	ELBOW,
2	4800661	1	CLAMP, HOSE,
3	14460181	1	O-RING, -143, Cl 7, 2.425" ID x .103" Thk,

0.27.0(01) OIL DIPSTICK

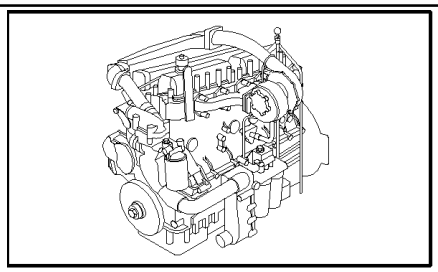

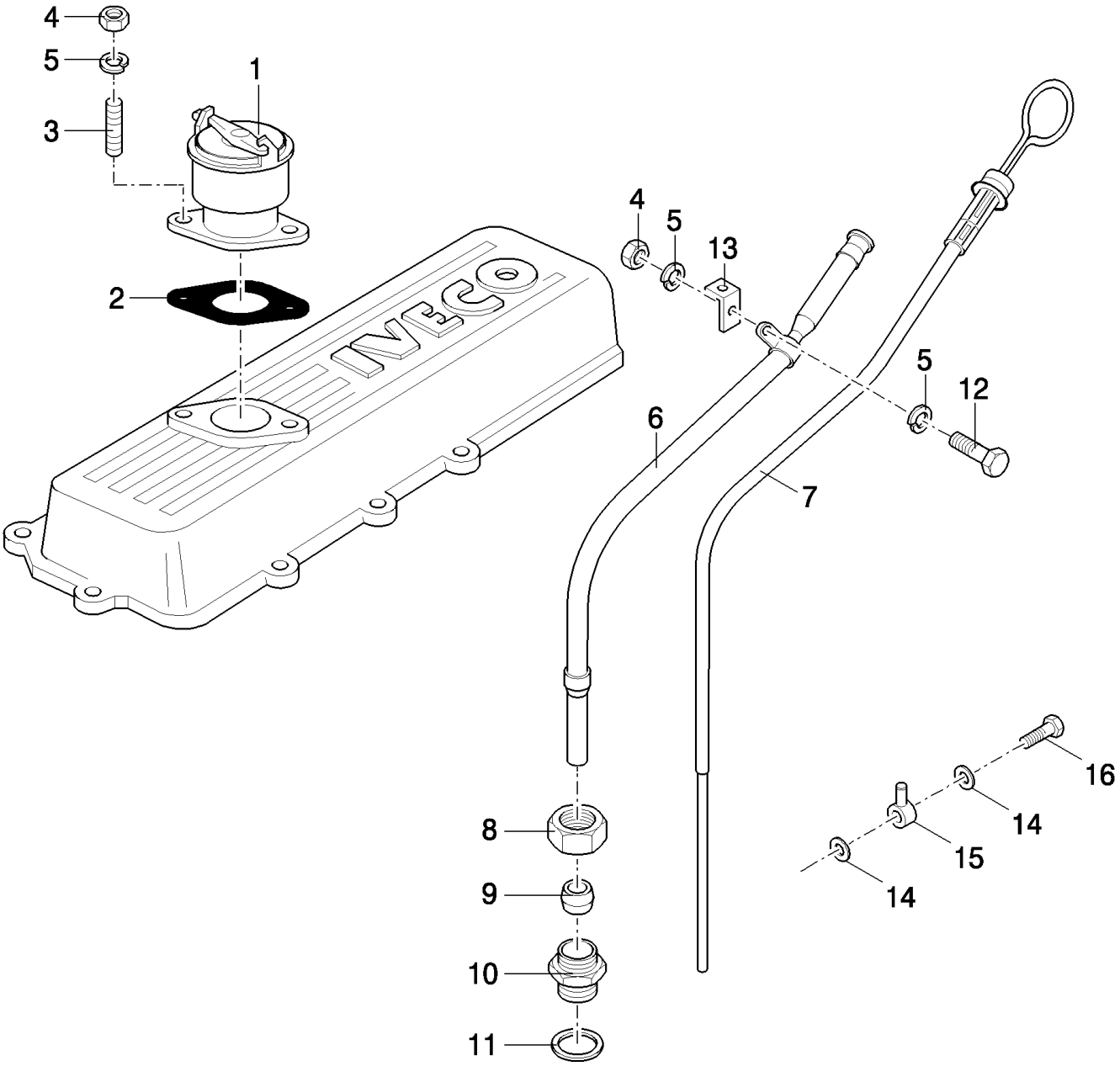

ONLY VALID UNTIL --1076999 (NOT FOR TX68PLUS)

TX68 COMBINE - BASE UNIT

0.27.0(01) OIL DIPSTICK

ссылка	Номер детали	Кол-во	Описание
1	8020561	1	CAP, INTRODUCTION, , FOR ENGINE TYPE 8460 SRI 10 00 A 007
1	61321584	1	CAP, INTRODUCTION, , FOR ENGINE TYPE 8465 SRI 10 00 A 001
1	61322029	1	CAP, INTRODUCTION, , FOR TX68PLUS ONLY
2	14464281	1	O-RING, -224, Cl 7, 1.734" ID x .139" Thk, , FOR TX68PLUS ONLY, FOR ENGINE TYPE 8465 SRI 10 00 A 001
3	13543321	2	STUD,
4	16100821	3	NUT, M8, Cl 10,
5	11193874	4	WASHER, SPRING, Belleville, M8.4,
2	14464681	1	O-RING, -228, Cl 7, 2.234" ID x .139" Thk, , FOR ENGINE TYPE 8460 SRI 10 00 A 007, FOR ENGINE TYPE 8460 SRI 10 00 A 007
6	8008820	1	TUBE, RIGID,
6	61321582	1	TUBE, RIGID, , FOR ENGINE TYPE 8465 SRI 10 00 A 001, FOR TX68PLUS ONLY
7	8021385	1	DIPSTICK, , FOR ENGINE TYPE 8460 SRI 10 00 A 007
7	61321581	1	DIPSTICK, , FOR ENGINE TYPE 8465 SRI 10 00 A 001, FOR TX68PLUS ONLY
8	4641220	1	NUT,
9	4641221	1	FERRULE, CONE TYPE,
10	61315370	1	CONNECTOR, HYD.,
11	16508360	1	GASKET, , NOT FOR TX68PLUS
11	4858610	1	GASKET, , FOR TX68PLUS ONLY
12	16043824	1	BOLT, Hex, M8 x 30, 8.8, Full Thd,
13	8011585	1	COLLAR, RETAINER, , FOR ENGINE TYPE 8460 SRI 10 00 A 007
13	61321583	1	COLLAR, RETAINER, , FOR ENGINE TYPE 8465 SRI 10 00 A 001
13	8019979	1	BRACKET, , FOR TX68PLUS ONLY
14	2852356	4	SEAL WASHER, , FOR TX68PLUS ONLY
15	61319226	1	CONNECTOR, HYD., , FOR TX68PLUS ONLY
16	61319225	1	CONNECTOR, HYD., , FOR TX68PLUS ONLY
16	10300611	2	PLUG, M14 x 1.5 x 14, Cl5.8, , FOR TX68PLUS ONLY

ONLY VALID UNTIL --1076999 (NOT FOR TX68PLUS)

0.30.0(01) OIL PUMP - ENGINE 8460 SRI 10 00 A 007 (NOT FOR TX68PLUS)

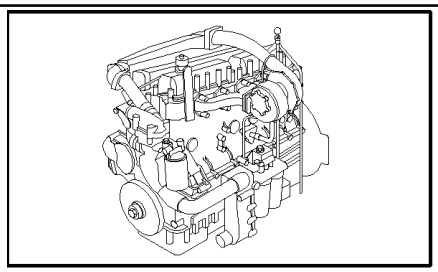

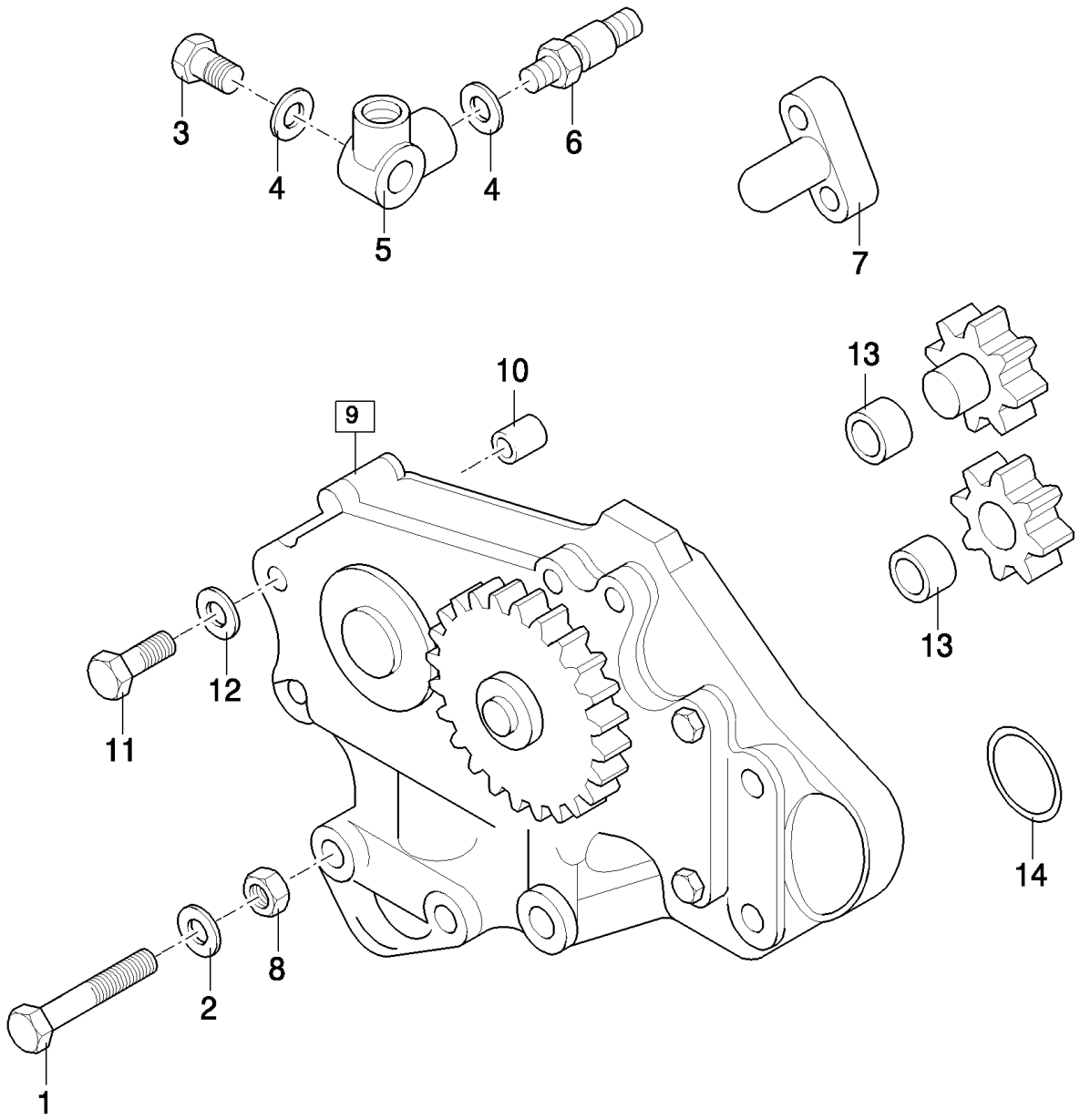

TX68 COMBINE - BASE UNIT

0.30.0(01) OIL PUMP - ENGINE 8460 SRI 10 00 A 007 (NOT FOR TX68PLUS)

ссылка	Номер детали	Кол-во	Описание
1	11307024	1	BOLT, Hex, M10 x 1.25 x 40, 8.8, Full Thd,
1	11288024	2	BOLT, Hex, M10 x 1.25 x 60, 8.8,
2	11198374	3	WASHER, SPRING, Belleville, M10.5,
3	10300611	2	PLUG, M14 x 1.5 x 14, Cl5.8,
4	2852356	4	SEAL WASHER,
5	61319226	1	CONNECTOR, HYD.,
6	61319225	1	CONNECTOR, HYD.,
7	61586093	1	NOZZLE, LUB. OIL JET,
8	16100821	3	NUT, M8, Cl 10,
9	61319221	1	PUMP, ENGINE OIL, (10 to 13)
10	61585585	2	DOWEL,
10	61577156	1	DOWEL,
11	16044124	2	BOLT, Hex, M8 x 45, 8.8,
11	16043924	1	BOLT, Hex, M8 x 35, 8.8, Full Thd,
11	16043724	3	BOLT, Hex, M8 x 27, 8.8, Full Thd,
12	11193874	6	WASHER, SPRING, Belleville, M8.4,
13	4800891	2	BUSHING,
14	14457881	1	O-RING, -120, Cl 7, .987" ID x .103" Thk,

ONLY VALID UNTIL --1076999

0.30.0(02) OIL PUMP - ENGINE 8465 SRI 10 00 A 001

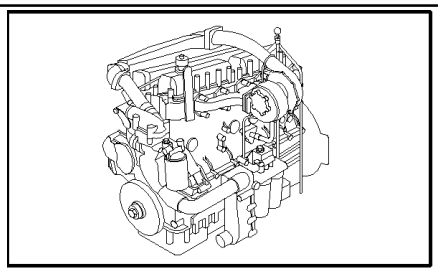

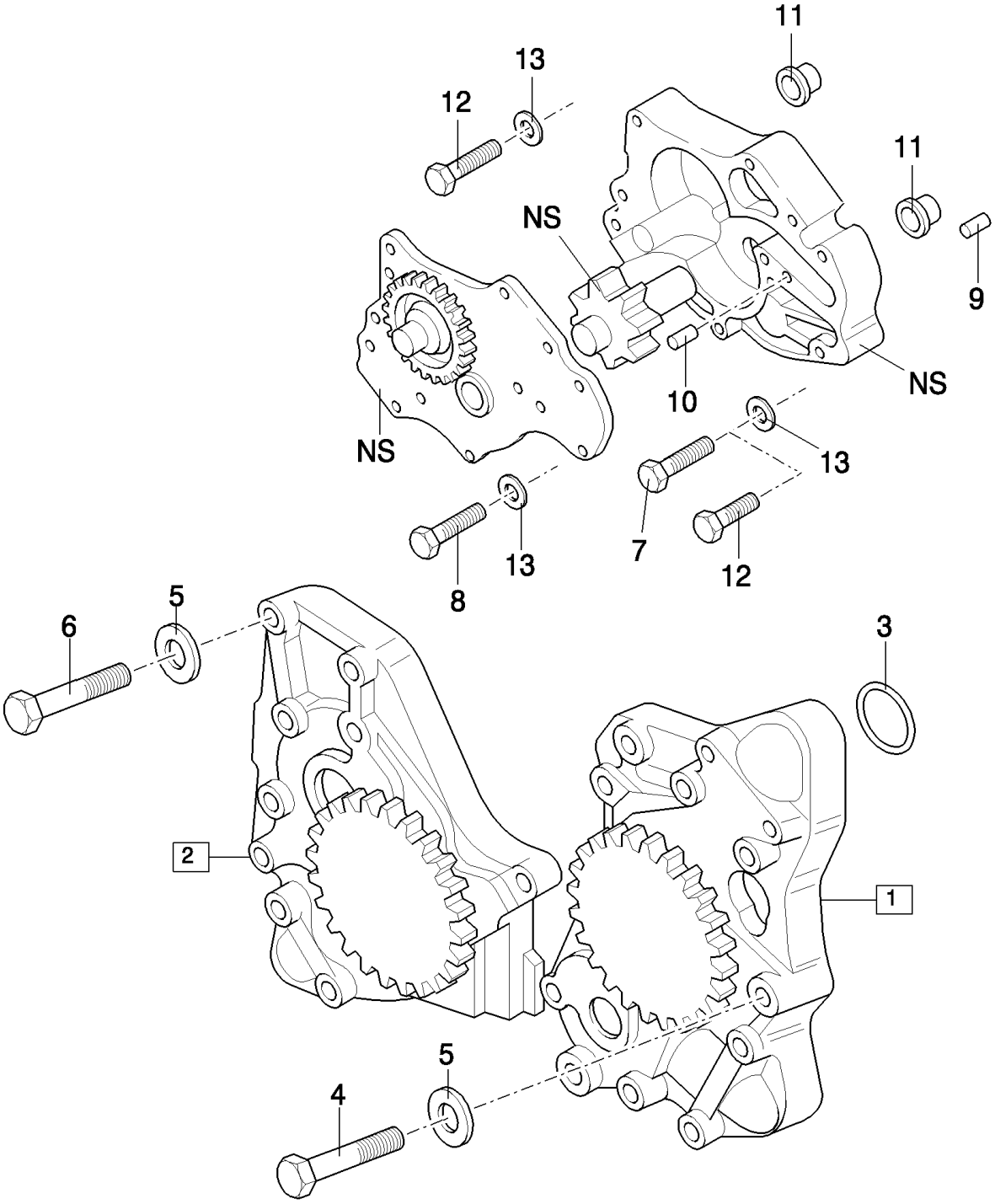

ONLY VALID UNTIL --1076999 (NOT FOR TX68PLUS)

TX68 COMBINE - BASE UNIT

0.30.0(02) OIL PUMP - ENGINE 8465 SRI 10 00 A 001

ссылка	Номер детали	Кол-во	Описание
1	61319221	1	PUMP, ENGINE OIL, (7 to 13)
2	61318396	1	PUMP, ENGINE OIL, (8 to 12)
3	17282381	1	ELEMENT, SEALING,
4	11288024	8	BOLT, Hex, M10 x 1.25 x 60, 8.8,
5	11198374	8	WASHER, SPRING, Belleville, M10.5,
6	11307024	2	BOLT, Hex, M10 x 1.25 x 40, 8.8, Full Thd,
7	16043924	1	BOLT, Hex, M8 x 35, 8.8, Full Thd,
8	16044124	2	BOLT, Hex, M8 x 45, 8.8,
9	61577156	2	DOWEL,
10	61585585	2	DOWEL,
11	4800891	2	BUSHING,
12	16043724	3	BOLT, Hex, M8 x 27, 8.8, Full Thd,
13	11193874	6	WASHER, SPRING, Belleville, M8.4,

ONLY VALID UNTIL --1076999 (NOT FOR TX68PLUS)

0.30.2(01) OIL-WATER HEAT EXCHANGER

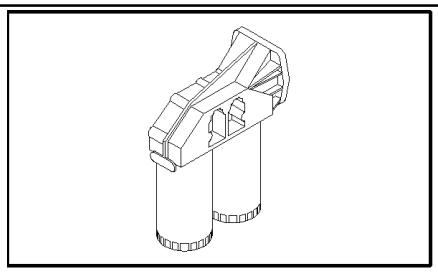

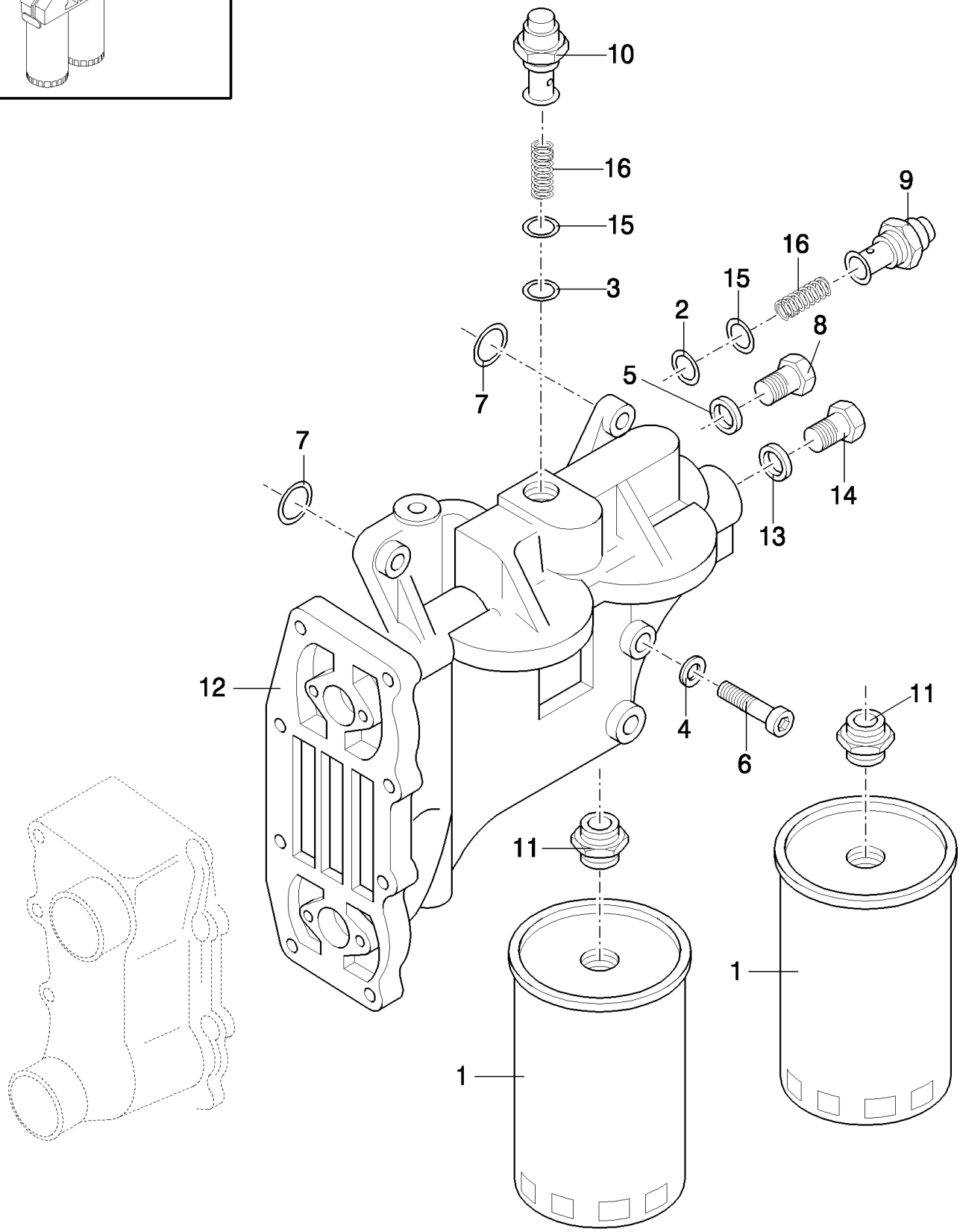

ONLY VALID UNTIL --1076999 (NOT FOR TX68PLUS)

TX68 COMBINE - BASE UNIT

0.30.2(01) OIL-WATER HEAT EXCHANGER

ссылка	Номер детали	Кол-во	Описание
1	1931048	2	FILTER, ENGINE OIL,
2	10265060	1	WASHER, COPPER, M32.4 x 38 x 1.5,
3	10265160	1	WASHER, COPPER, M35.4 x 41 x 1.5, Copper,
4	11190574	4	WASHER, SPRING, Belleville, M10.5,
5	10261960	2	WASHER, COPPER, M24.4 x 30 x 1.5, Copper,
6	11288024	2	BOLT, Hex, M10 x 1.25 x 60, 8.8,
6	15971824	1	BOLT, Hex, M10 x 1.25 x 100, 8.8,
7	14463881	4	O-RING, -220, Cl 7, 1.359" ID x .139" Thk,
8	10304611	2	PLUG, M24x1.5
9	61318009	1	VALVE, HYDRAULIC,
10	61318010	1	VALVE, HYDRAULIC,
11	61315507	2	CONNECTOR, HYD.,
12	61319218	1	SUPPORT,
13	10303460	1	GASKET,
14	61319466	1	PLUG, M30x1.5
15	11057375	2	RING, LOCKING,
16	61320924	2	SPRING,
6	11306924	1	SCREW, Hex, M10 x 1.25 x 30, 8.8, Full Thd,

ONLY VALID UNTIL --1076999 (NOT FOR TX68PLUS)

0.30.5(01) LUBE OIL PUMP - ENGINE 8460 SRI 10 00 A 007 (NOT FOR TX68PLUS)

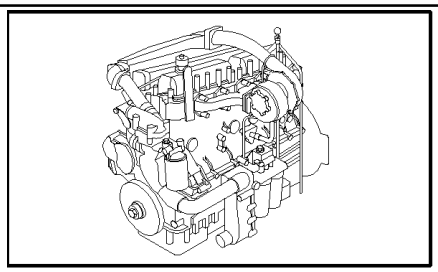

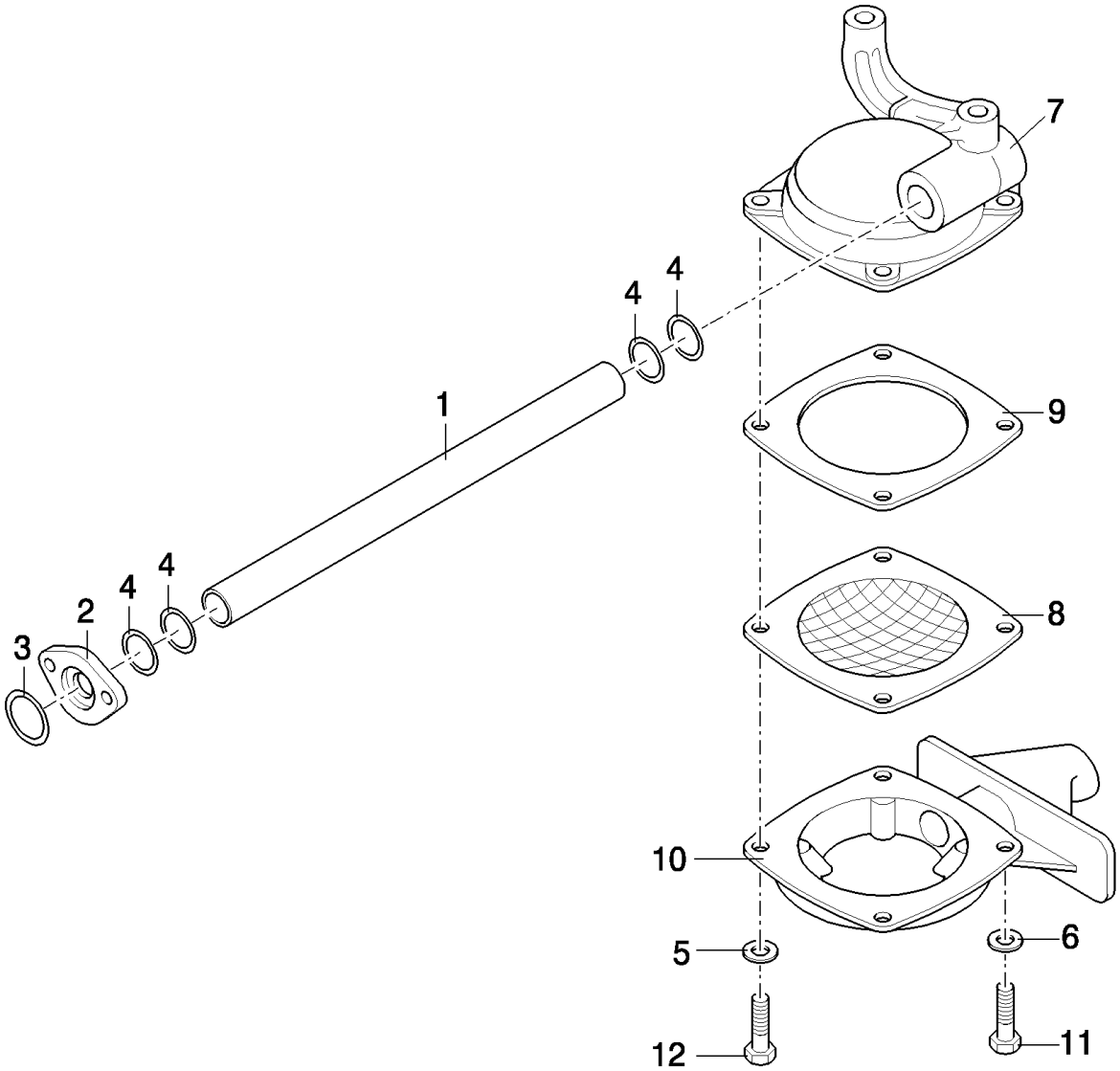

TX68 COMBINE - BASE UNIT

0.30.5(01) LUBE OIL PUMP - ENGINE 8460 SRI 10 00 A 007 (NOT FOR TX68PLUS)

ссылка	Номер детали	Кол-во	Описание
1	61320868	1	TUBE, RIGID,
2	61317784	1	FLANGE,
3	14465381	1	O-RING, -235, Cl 7, 3.109" ID x .139" Thk,
4	14463581	4	O-RING, -217, Cl 7, 1.171" ID x .139" Thk,
5	11194874	1	WASHER, SPRING, Belleville, M6.4, 6MM
6	11194079	5	WASHER, SPRING, Belleville, M8.4,
7	61316168	1	SCOOP, GRAIN,
8	4759454	1	FILTER,
9	61319056	1	GASKET,
10	61319037	1	SCOOP, GRAIN,
11	16043624	3	BOLT, Hex, M8 x 25, 8.8, Full Thd,
12	10902624	1	BOLT, Hex, M6 x 25, 8.8, Full Thd,

ONLY VALID UNTIL --1076999

0.30.5(02) LUBE OIL PUMP - ENGINE 8465 SRI 10 00 A 001

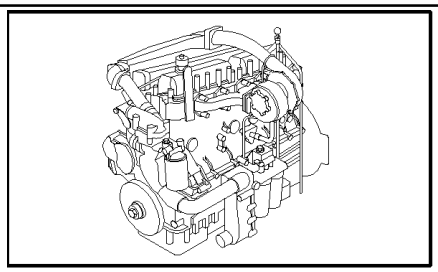

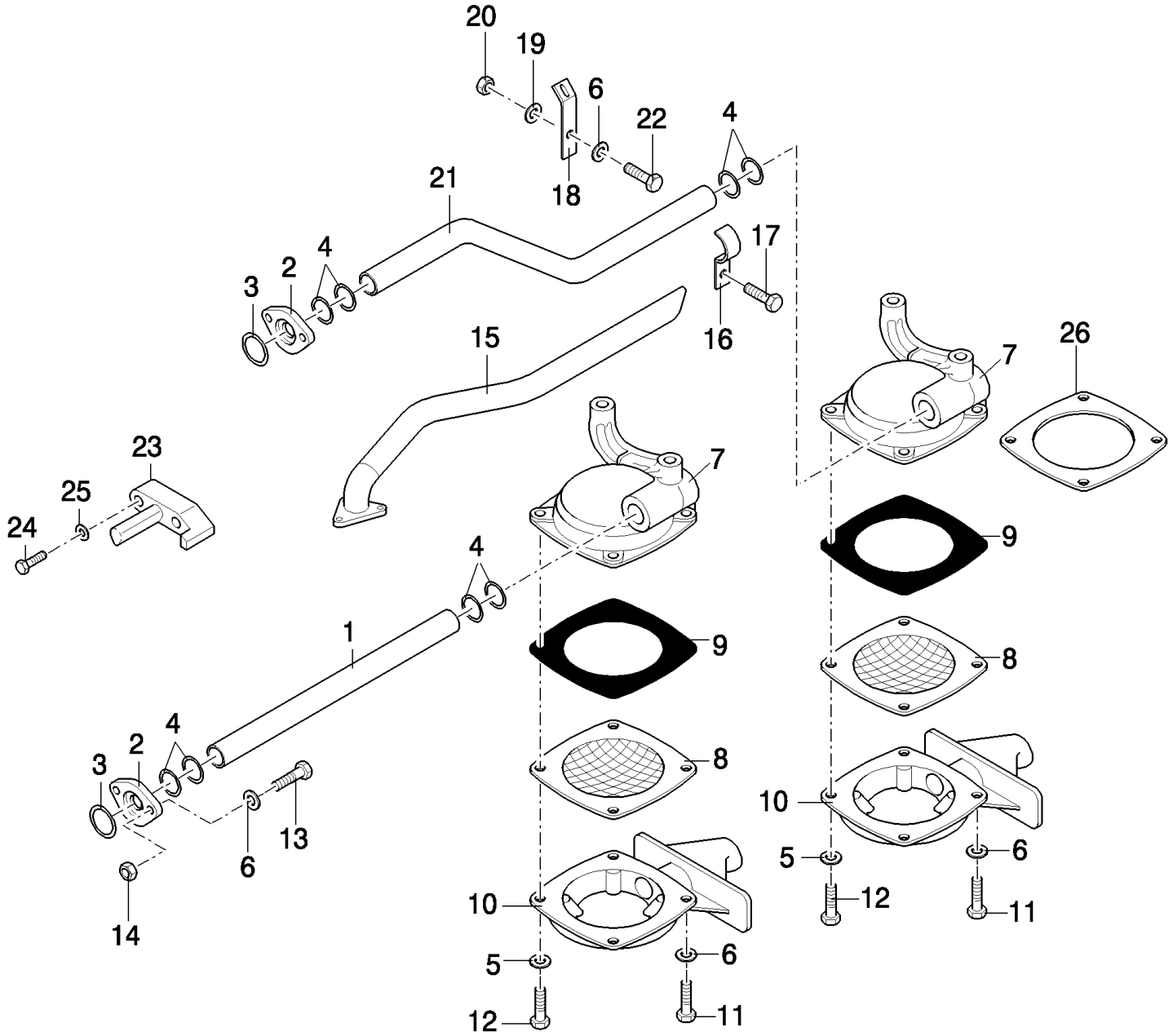

ONLY VALID UNTIL --1076999 (NOT FOR TX68PLUS)

TX68 COMBINE - BASE UNIT

0.30.5(02) LUBE OIL PUMP - ENGINE 8465 SRI 10 00 A 001

ссылка	Номер детали	Кол-во	Описание
1	61321608	1	TUBE, RIGID,
2	61317784	2	FLANGE,
3	14465381	6	O-RING, -235, Cl 7, 3.109" ID x .139" Thk,
4	14463581	8	O-RING, -217, Cl 7, 1.171" ID x .139" Thk,
5	11194874	2	WASHER, SPRING, Belleville, M6.4, 6MM
6	11194079	7	WASHER, SPRING, Belleville, M8.4,
7	61316168	2	SCOOP, GRAIN,
8	4759454	2	FILTER,
9	61319056	4	GASKET,
10	61316169	2	BODY,
11	16043624	6	BOLT, Hex, M8 x 25, 8.8, Full Thd,
13	16044524	4	BOLT, Hex, M8 x 65, 8.8,
14	16100821	4	NUT, M8, Cl 10,
15	61316163	1	TUBE, RIGID, , NOT FOR TX68PLUS
16	61316171	1	CLIP, HOSE,
17	16043524	1	BOLT, Hex, M8 x 22, 8.8, Full Thd,
18	61316170	1	PLATE, COVER,
19	17094914	1	WASHER,
20	13680011	1	NUT,
21	61321607	1	TUBE, RIGID,
23	61586093	1	NOZZLE, LUB. OIL JET, , FOR TX68PLUS ONLY
24	10902424	2	BOLT, Hex, M6 x 20, 8.8, Full Thd, , FOR TX68PLUS ONLY
25	17799374	2	WASHER, LOCK, , FOR TX68PLUS ONLY
26	4673582	2	WASHER, , FOR TX68PLUS ONLY
12	10902624	4	BOLT, Hex, M6 x 25, 8.8, Full Thd,
22	16043324	1	BOLT, Hex, M8 x 18, 8.8, Full Thd,

ONLY VALID UNTIL --1076999 (NOT FOR TX68PLUS)

0.32.0(01) WATER PUMP (NOT FOR TX68PLUS)

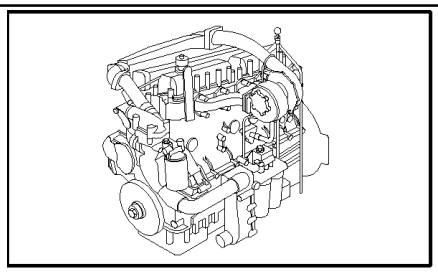

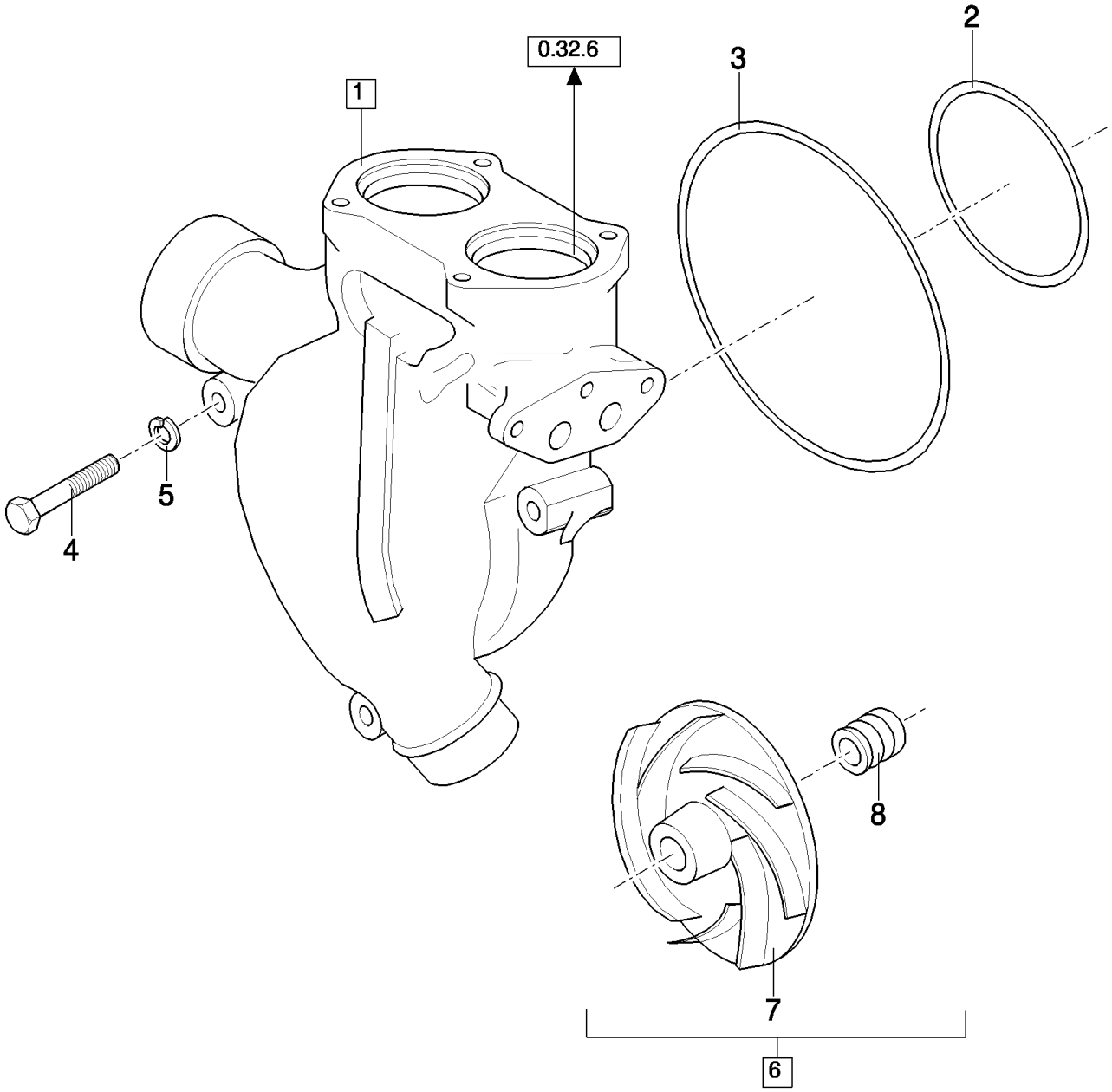

ONLY VALID UNTIL --1076999

TX68 COMBINE - BASE UNIT

0.32.0(01) WATER PUMP (NOT FOR TX68PLUS)

ссылка	Номер детали	Кол-во	Описание
1	61321400	1	PUMP, WATER, (6 to 8)
2	14460781	1	O-RING, -149, Cl 7, 2.8" ID x .103" Thk,
3	14461680	1	O-RING, -158, 70 Duro, 4.737" ID x .103" Thk,
4	16204524	2	BOLT, Hex, M10 x 35, , FOR ENGINE TYPE 8460 SRI 10 00 A 007
4	11343821	2	BOLT, Hex, M10 x 1.25 x 50, 8.8, , FOR ENGINE TYPE 8465 SRI 10 00 A 001
4	15971424	1	BOLT, Hex, M10 x 1.25 x 80, 8.8, , FOR ENGINE TYPE 8460 SRI 10 00 A 007
4	15971321	1	BOLT, Hex, M10 x 75, 8.8, , FOR ENGINE TYPE 8465 SRI 10 00 A 001
4	15972221	1	BOLT, Hex, M10 x 1.25 x 120, 8.8,
5	11198374	3	WASHER, SPRING, Belleville, M10.5,
6	61319596	1	KIT, REPAIR, (7,8)
7	61319588	1	FAN,
8	98463962	1	GASKET,

ONLY VALID UNTIL --1076999

0.32.0(01A) WATER PUMP - TX68PLUS

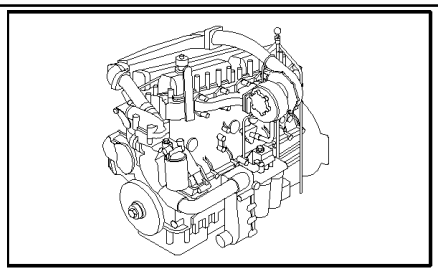

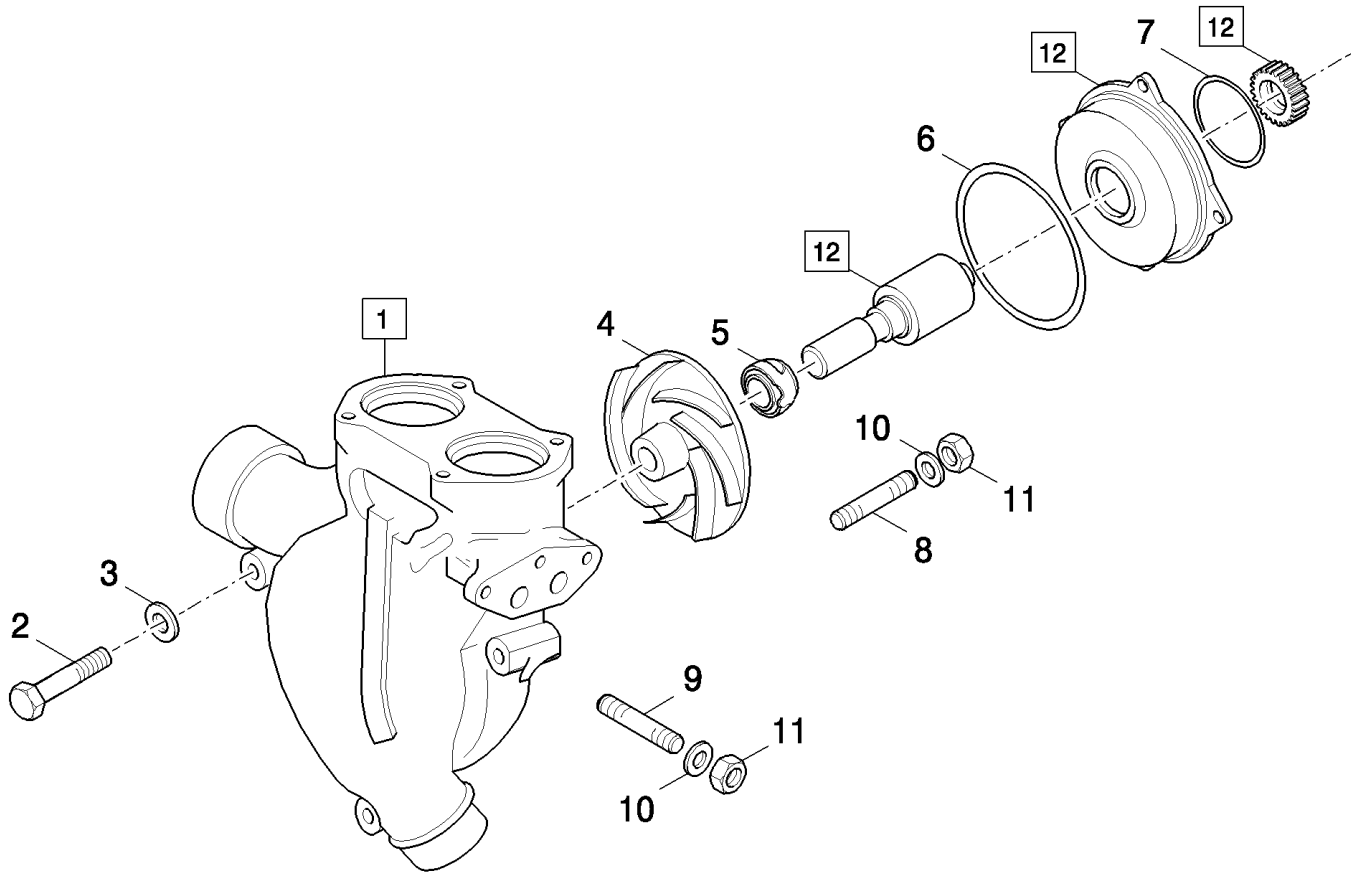

TX68 COMBINE - BASE UNIT

0.32.0(01A) WATER PUMP - TX68PLUS

ссылка	Номер детали	Кол-во	Описание
1	500350797	1	PUMP, WATER, (4 to 11)
2	15971324	1	BOLT, Hex, M10 x 1.25 x 75, 8.8,
2	11343821	1	BOLT, Hex, M10 x 1.25 x 50, 8.8,
2	15972221	1	BOLT, Hex, M10 x 1.25 x 120, 8.8,
3	11198374	3	WASHER, SPRING, Belleville, M10.5,
4	61319588	1	FAN,
5	500350790	1	GASKET,
6	14461680	1	O-RING, -158, 70 Duro, 4.737" ID x .103" Thk,
7	14460781	1	O-RING, -149, Cl 7, 2.8" ID x .103" Thk, 2.62x71.12
8	13516821	3	STUD, 8x12x20
9	13517020	2	STUD, 8x12x5
10	11193874	5	WASHER, SPRING, Belleville, M8.4,
11	16100821	5	NUT, M8, Cl 10,
12	500350798	1	KIT, REPAIR, (4 to 7)

0.32.0(02) WATER LINES

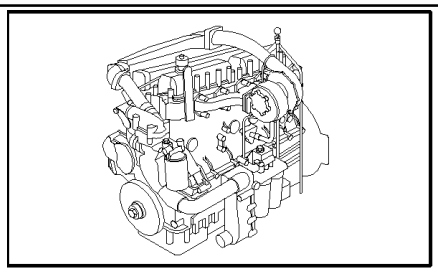

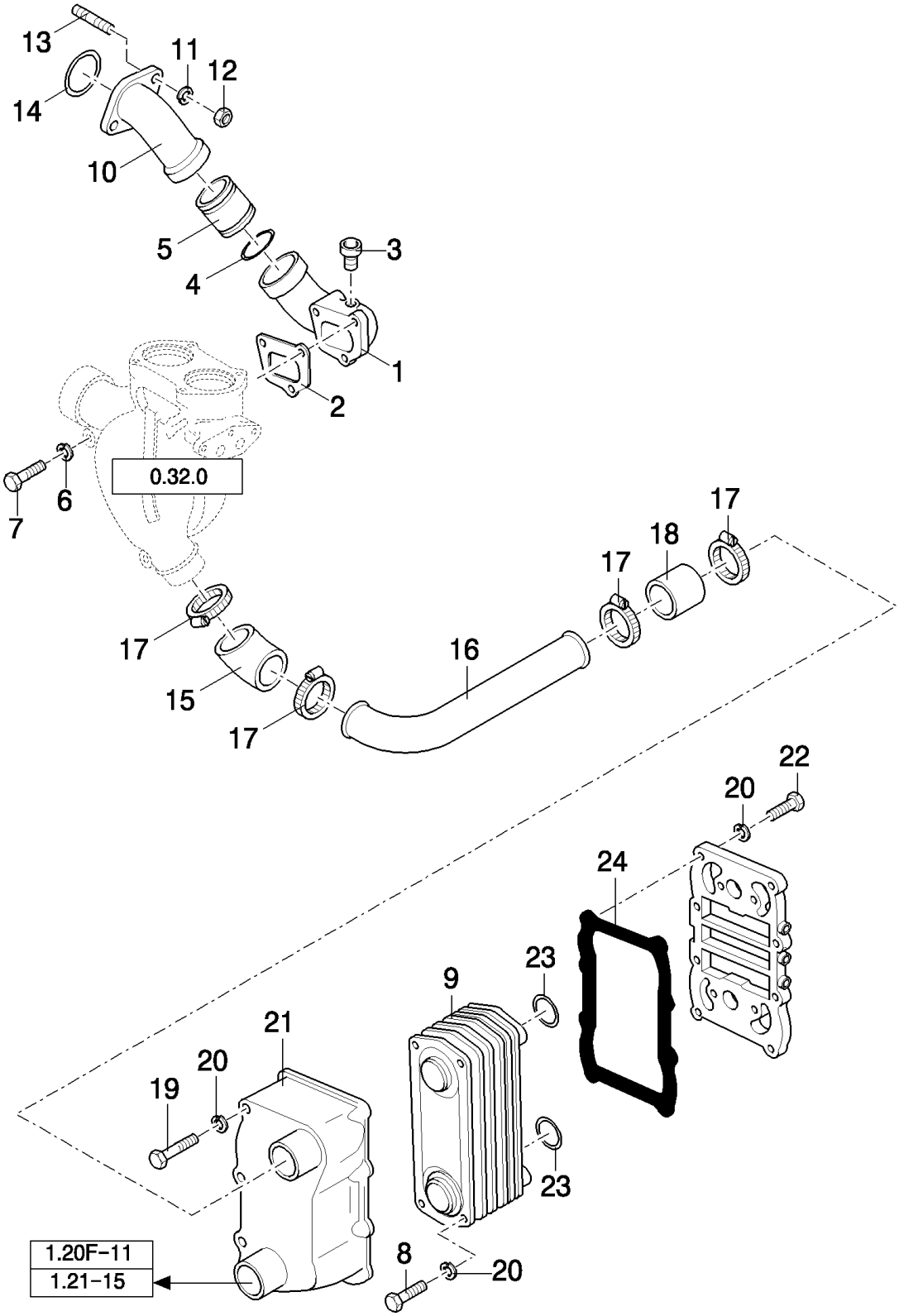

ONLY VALID UNTIL --1076999 (NOT FOR TX68PLUS)

TX68 COMBINE - BASE UNIT

0.32.0(02) WATER LINES

ссылка	Номер детали	Кол-во	Описание
1	61318069	1	ELBOW,
2	61318850	2	GASKET,
3	16996511	1	PLUG,
3	14325311	1	PLUG, M22x1.5
4	14471481	2	GASKET, -331, Cl 7, 2.225" ID x .210" Thk, , NOT FOR TX68PLUS
4	17296080	2	GASKET, , FOR TX68PLUS ONLY
5	61317101	1	SLEEVE,
6	11193874	3	WASHER, SPRING, Belleville, M8.4,
7	16044821	1	BOLT, Hex, M8 x 80, 8.8,
7	16043824	1	BOLT, Hex, M8 x 30, 8.8, Full Thd,
8	16043924	5	BOLT, Hex, M8 x 35, 8.8, Full Thd,
9	61319539	1	HEAT EXCHANGER, , NOT FOR TX68PLUS
9	98470587	1	INTERNAL EXCHANGER UNIT, , FOR TX68PLUS ONLY
10	8016830	1	TUBE, RIGID, , NOT FOR TX68PLUS
11	17094904	2	WASHER, , NOT FOR TX68PLUS
12	17037921	2	NUT, , NOT FOR TX68PLUS
13	16729424	2	STUD, , NOT FOR TX68PLUS
14	17290181	1	ELEMENT, SEALING, , NOT FOR TX68PLUS
15	99444729	1	HOSE,
16	61317308	1	TUBE, RIGID, , NOT FOR TX68PLUS
16	8023401	1	TUBE, RIGID, , FOR TX68PLUS ONLY
17	13000990	4	CLAMP, HOSE, , NOT FOR TX68PLUS
17	99443680	4	COLLAR, , FOR TX68PLUS ONLY
18	61317309	1	HOSE, , FOR ENGINE TYPE 8460 SRI 10 00 A 007
18	61321191	1	HOSE, , FOR ENGINE TYPE 8465 SRI 10 00 A 001, FOR TX68PLUS ONLY
19	16043924	5	BOLT, Hex, M8 x 35, 8.8, Full Thd,
19	16046031	5	BOLT, Hex, M8 x 140, 10.9,
20	11193874	14	WASHER, SPRING, Belleville, M8.4,
21	61317985	1	BODY, , NOT FOR TX68PLUS
21	8023403	1	COVER, , FOR TX68PLUS ONLY
22	16043724	4	BOLT, Hex, M8 x 27, 8.8, Full Thd,
23	14459081	2	O-RING, -132, Cl 7, 1.737" ID x .103" Thk,
24	61318847	1	GASKET,
7	16044321	1	BOLT, Hex, M8 x 55, 8.8,

ONLY VALID UNTIL --1076999 (NOT FOR TX68PLUS)

0.32.3(01) WATER LINES (NOT FOR TX68PLUS)

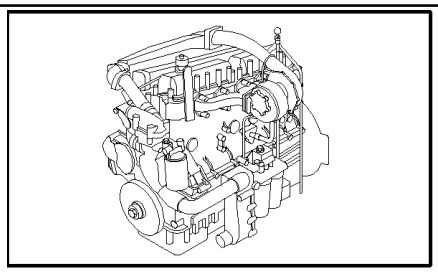

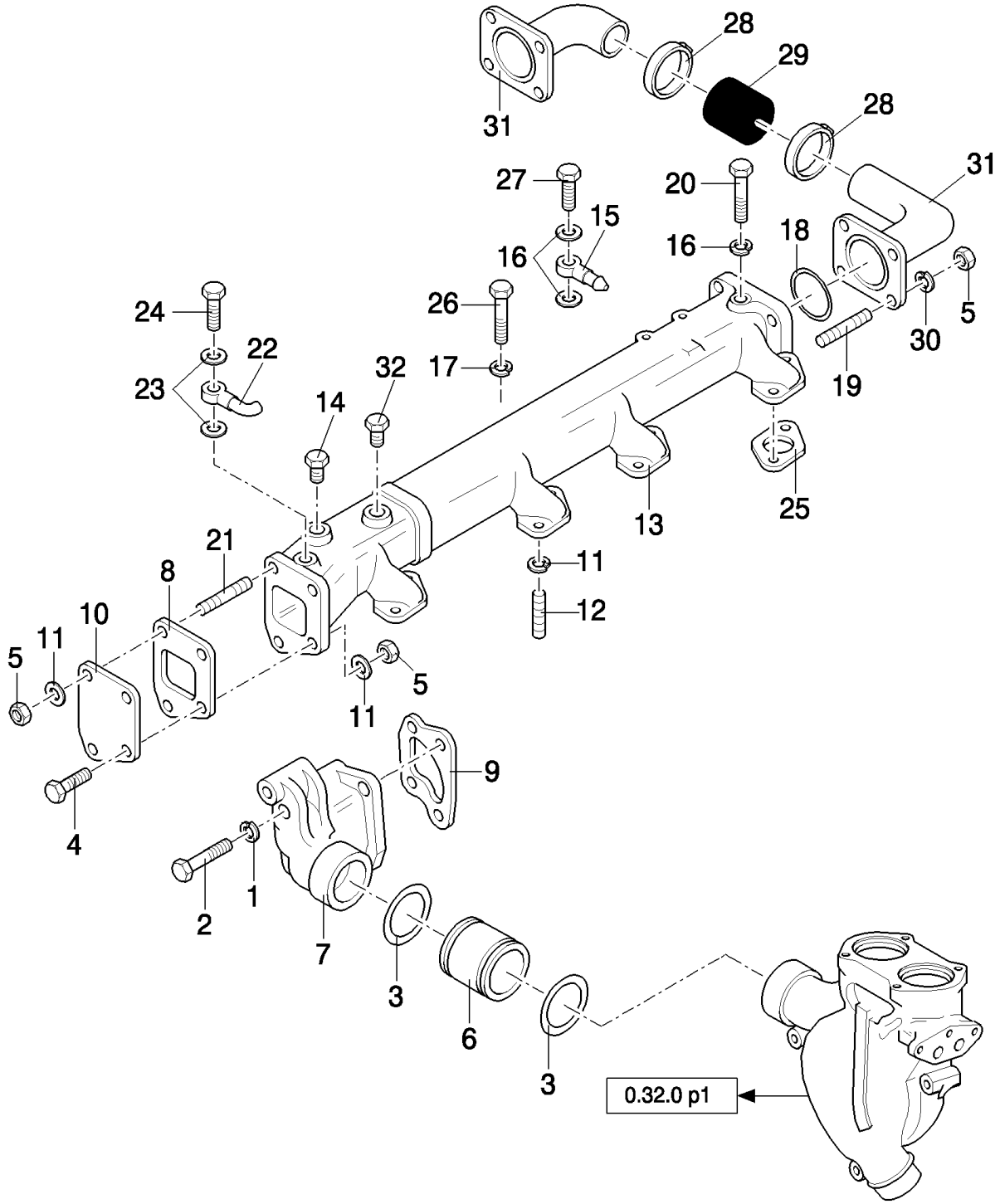

TX68 COMBINE - BASE UNIT

0.32.3(01) WATER LINES (NOT FOR TX68PLUS)

ссылка	Номер детали	Кол-во	Описание
1	11198374	7	WASHER, SPRING, Belleville, M10.5,
2	15971321	2	BOLT, Hex, M10 x 75, 8.8,
3	17296080	4	GASKET,
4	16043924	1	BOLT, Hex, M8 x 35, 8.8, Full Thd,
5	16100821	12	NUT, M8, Cl 10,
6	61317101	2	SLEEVE,
7	61317107	1	ELBOW,
8	61318822	1	GASKET, , FOR ENGINE TYPE 8460 SRI 10 00 A 007
9	61318820	1	GASKET,
10	61317597	1	COVER, , FOR ENGINE TYPE 8460 SRI 10 00 A 007
11	11193874	6	WASHER, SPRING, Belleville, M8.4,
12	13525870	7	SCREW,
13	61315632	1	DUCT,
14	16997411	1	PLUG, M16x1.5
15	4678165	1	CONNECTOR, HYD.,
16	2854292	3	SEAL WASHER,
17	11194079	8	WASHER, SPRING, Belleville, M8.4,
18	14464881	2	O-RING, -230, Cl 7, 2.484" ID x .139" Thk,
19	13517021	8	STUD, M8x12x25
20	16992211	1	PLUG, M12
21	13543321	3	STUD,
22	61315511	1	CONNECTION, SWIVEL, , FOR ENGINE TYPE 8460 SRI 10 00 A 007
22	98417685	1	CONNECTION, SWIVEL, , FOR ENGINE TYPE 8465 SRI 10 00 A 001
23	98474306	2	WASHER, SEALING, , FOR ENGINE TYPE 8460 SRI 10 00 A 007
23	2854292	2	SEAL WASHER, , FOR ENGINE TYPE 8465 SRI 10 00 A 001
24	2854291	1	BOLT, BANJO,
25	61319050	4	GASKET,
26	16044424	4	BOLT, Hex, M8 x 60, 8.8,
26	16043824	4	BOLT, Hex, M8 x 30, 8.8, Full Thd,
27	8009696	1	BOLT, BANJO,
28	13000990	2	CLAMP, HOSE,
29	8016642	1	HOSE, , FOR ENGINE TYPE 8460 SRI 10 00 A 007
29	61321601	1	HOSE, , FOR ENGINE TYPE 8465 SRI 10 00 A 001
30	11193874	8	WASHER, SPRING, Belleville, M8.4,
31	8016620	2	ELBOW, , FOR ENGINE TYPE 8460 SRI 10 00 A 007
31	61321600	2	ELBOW, , FOR ENGINE TYPE 8465 SRI 10 00 A 001
32	16997811	1	PLUG, M24x1.5
2	11306924	2	SCREW, Hex, M10 x 1.25 x 30, 8.8, Full Thd, M10 x 75

ONLY VALID UNTIL --1076999

0.32.3/1(01) WATER LINES - TX68PLUS

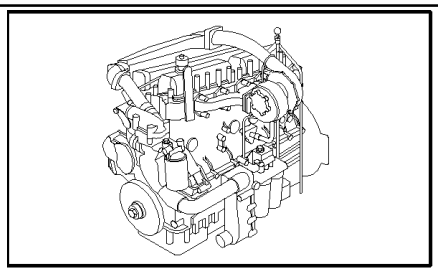

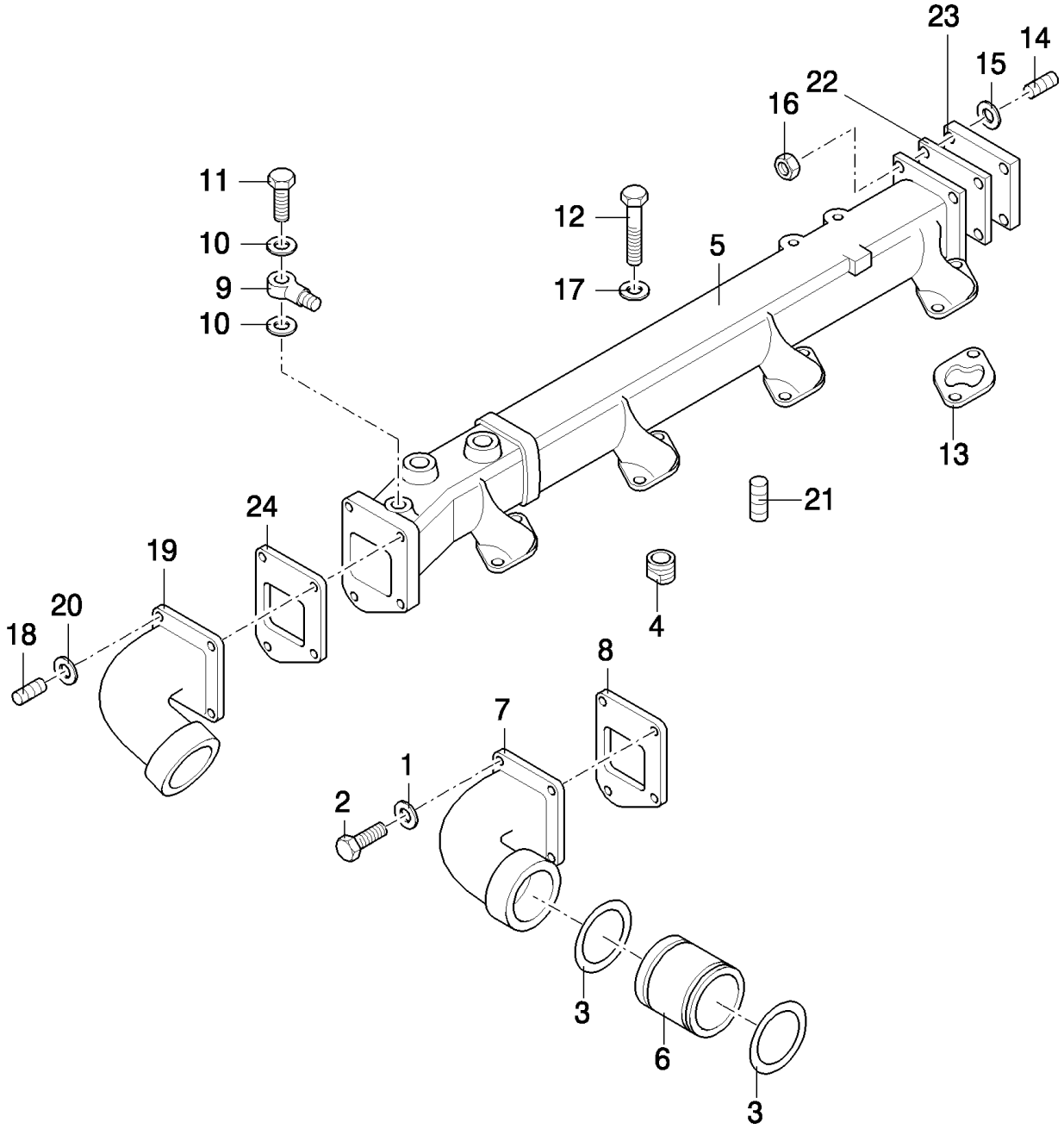

TX68 COMBINE - BASE UNIT

0.32.3/1(01) WATER LINES - TX68PLUS

ссылка	Номер детали	Кол-во	Описание
1	11198374	4	WASHER, SPRING, Belleville, M10.5,
2	15971321	2	BOLT, Hex, M10 x 75, 8.8,
3	17296080	2	GASKET,
4	13525870	7	SCREW,
5	61315632	1	DUCT,
6	61317101	1	SLEEVE,
7	61317107	1	ELBOW,
8	61318820	1	GASKET,
9	98417685	1	CONNECTION, SWIVEL,
10	2854292	2	SEAL WASHER,
11	61322017	1	BOLT, BANJO,
12	16044424	4	BOLT, Hex, M8 x 60, 8.8,
12	16043824	4	BOLT, Hex, M8 x 30, 8.8, Full Thd,
13	61319050	4	GASKET,
14	13543521	4	STUD,
15	11193874	8	WASHER, SPRING, Belleville, M8.4,
16	16100821	12	NUT, M8, Cl 10,
17	11194079	8	WASHER, SPRING, Belleville, M8.4,
18	13543624	3	STUD,
18	16044124	1	BOLT, Hex, M8 x 45, 8.8,
19	61318769	1	ELBOW,
20	12638501	4	WASHER, M8 x 15 x 1.5,
21	16997811	1	PLUG, M24
21	16992211	1	PLUG, M12
21	99434268	1	PLUG, M16
22	17280580	1	GASKET,
23	99479060	1	COVER,
24	61318822	1	GASKET,
2	11306924	2	SCREW, Hex, M10 x 1.25 x 30, 8.8, Full Thd,

0.32.6(01) WATER FILTER AND THERMOSTAT

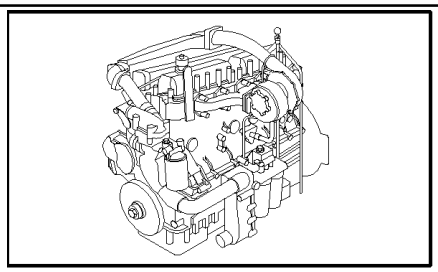

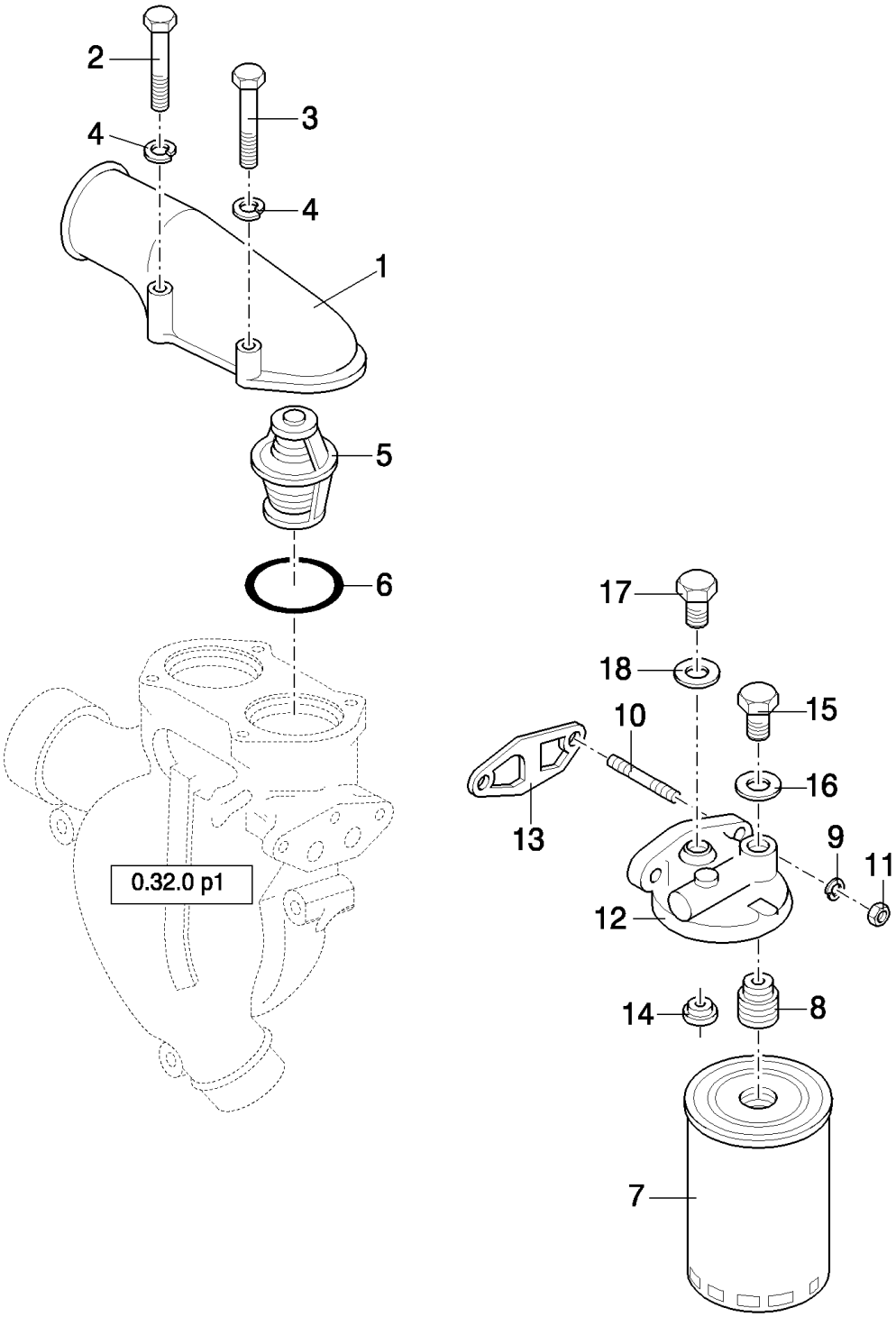

ONLY VALID UNTIL --1076999 (NOT FOR TX68PLUS)

TX68 COMBINE - BASE UNIT

0.32.6(01) WATER FILTER AND THERMOSTAT

ссылка	Номер детали	Кол-во	Описание
1	61318956	1	COVER,
2	15971424	2	BOLT, Hex, M10 x 1.25 x 80, 8.8,
3	15888724	2	BOLT, Hex, M10 x 1.25 x 55, 8.8,
4	11190574	4	WASHER, SPRING, Belleville, M10.5,
5	98424854	2	THERMOSTAT,
6	4863955	2	GASKET,
7	1930549	1	FILTER, ELEMENT,
8	4807730	1	CONNECTOR, HYD.,
9	11193874	2	WASHER, SPRING, Belleville, M8.4,
10	13517020	2	STUD, M8x12x25
11	16100821	2	NUT, M8, Cl 10,
12	61319661	1	BODY,
13	61318823	1	GASKET,
14	61316100	1	VALVE, PRESSURE RELIEF,
15	10300714	1	PLUG, M16 x 1.5 x 14,
16	4858609	1	O-RING, 16x22x1.5
17	4595833	1	PLUG, M20x1.5.
18	98429280	1	GASKET, 20x16x1.5

ONLY VALID UNTIL --1076999 (NOT FOR TX68PLUS)

TX68 COMBINE - BASE UNIT

0.36.0(01) STARTER MOTOR

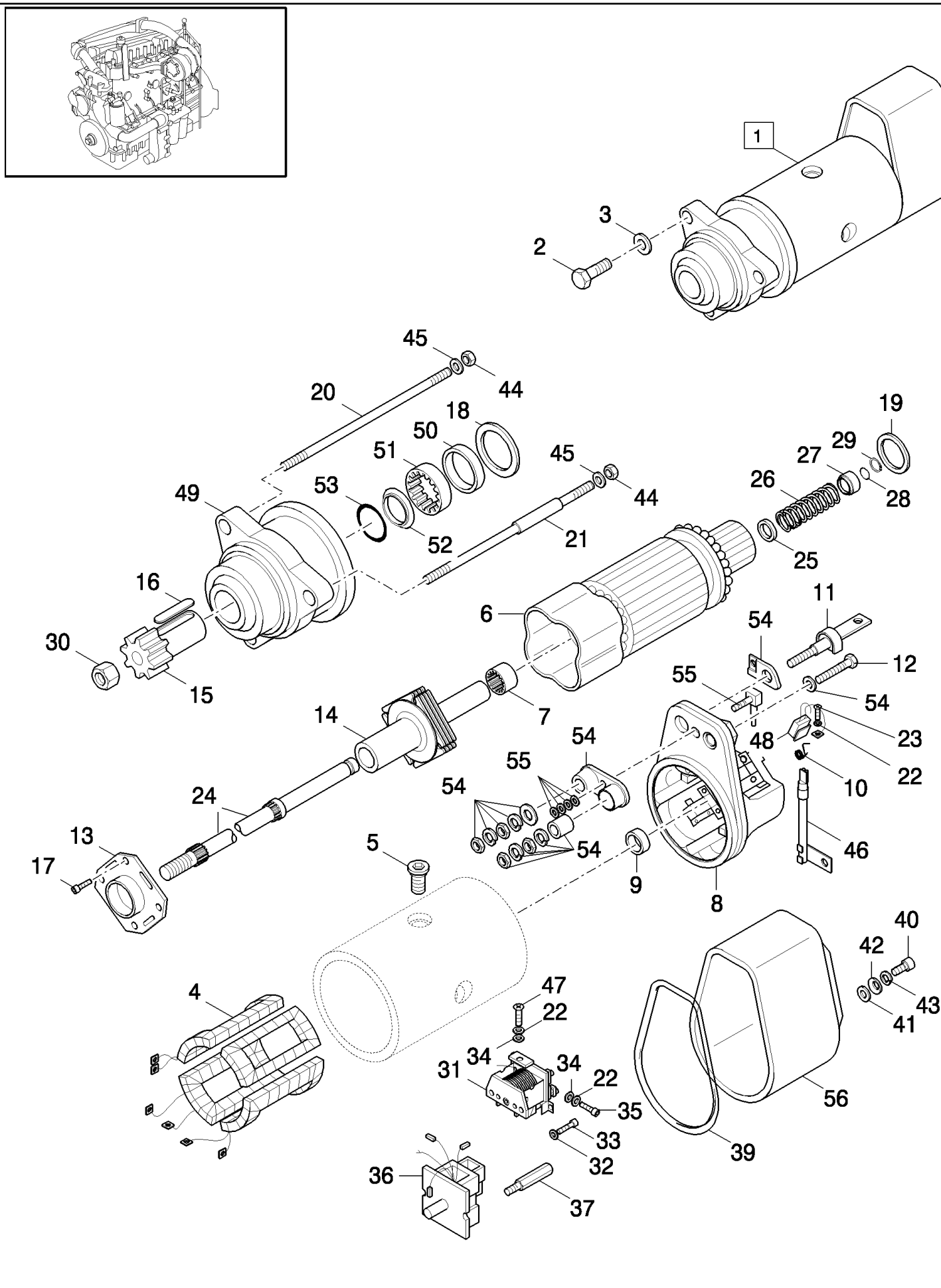

ONLY VALID UNTIL --1076999 (NOT FOR TX68PLUS)

TX68 COMBINE - BASE UNIT

0.36.0(01) STARTER MOTOR

ссылка	Номер детали	Кол-во	Описание
1	4784747	1	MOTOR, STARTER, (4 to 56)
2	11112821	3	BOLT, Hex, M12 x 40, 8.8, Full Thd,
3	11190774	3	WASHER, SPRING, Belleville, M13,
4	8122371	1	COIL,
5	9972048	4	SCREW,
6	8122372	1	ARMATURE,
7	79052275	1	BEARING ASSY,
8	9972049	1	SUPPORT,
9	79052278	1	BUSHING,
10	1290139	4	SPRING,
11	9972045	1	ROD, THREADED,
12	79052277	1	SCREW,
13	9920338	1	FLANGE,
14	79052241	1	SPINDLE,
15	9971850	1	SPROCKET, DRIVEN,
16	79052235	1	KEY,
17	79052237	4	SCREW,
18	79052239	1	RING,
19	79052250	AR	PLATE, ADJUSTING, THK.:0.30MM
19	79052251	AR	PLATE, ADJUSTING, THK.:0.50MM
19	1289920	AR	SHIM, 0.20mm Thk,
20	79052254	1	TIE-ROD,
21	42485206	3	TIE-ROD,
22	10571474	4	WASHER, LOCK,
23	9972051	4	SCREW,
24	79052240	1	TIE-ROD,
25	79052244	1	RING,
26	79052245	1	SPRING,
27	79052246	1	RING,
28	79052247	11	BALL,
29	79052248	1	RING, LOCKING,
30	76026064	1	NUT,
31	79052269	1	RELAY,
32	10516674	2	WASHER, LOCK, 5/16",
33	79106737	2	SCREW,
34	9920401	3	WASHER,
35	79028449	3	SCREW,
36	79052266	1	SOLENOID,
37	79052263	2	PIN,
38	79052262	2	WASHER,
39	9920382	1	RING, RUBBER,
40	9923751	1	SCREW,
41	1289929	1	O-RING,
42	79052265	1	CUP,

ONLY VALID UNTIL --1076999 (NOT FOR TX68PLUS)

TX68 COMBINE - BASE UNIT

0.36.0(01) STARTER MOTOR

ссылка	Номер детали	Кол-во	Описание
43	10516474	1	WASHER, LOCK,
44	15896221	4	NUT, M6, Cl 10,
45	75205281	4	WASHER, LOCK,
46	9927611	1	CABLE, ELECTRIC,
47	9972052	1	SCREW,
48	79052257	1	BRUSH,
49	9972050	1	SUPPORT,
50	79052271	1	BUSHING,
51	79052273	1	BEARING ASSY,
52	9967422	1	GASKET,
53	9967423	1	RING,
54	9972046	1	KIT,
55	9971793	1	KIT,
56	79076024	1	COVER,

ONLY VALID UNTIL --1076999 (NOT FOR TX68PLUS)

0.56.5(01) ELECTRIC STOP ENGINE (NOT FOR TX68PLUS)

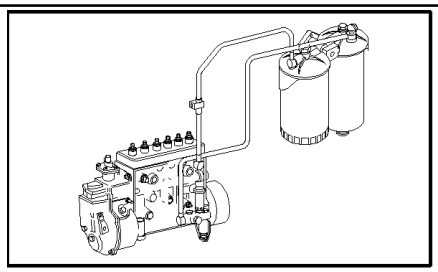

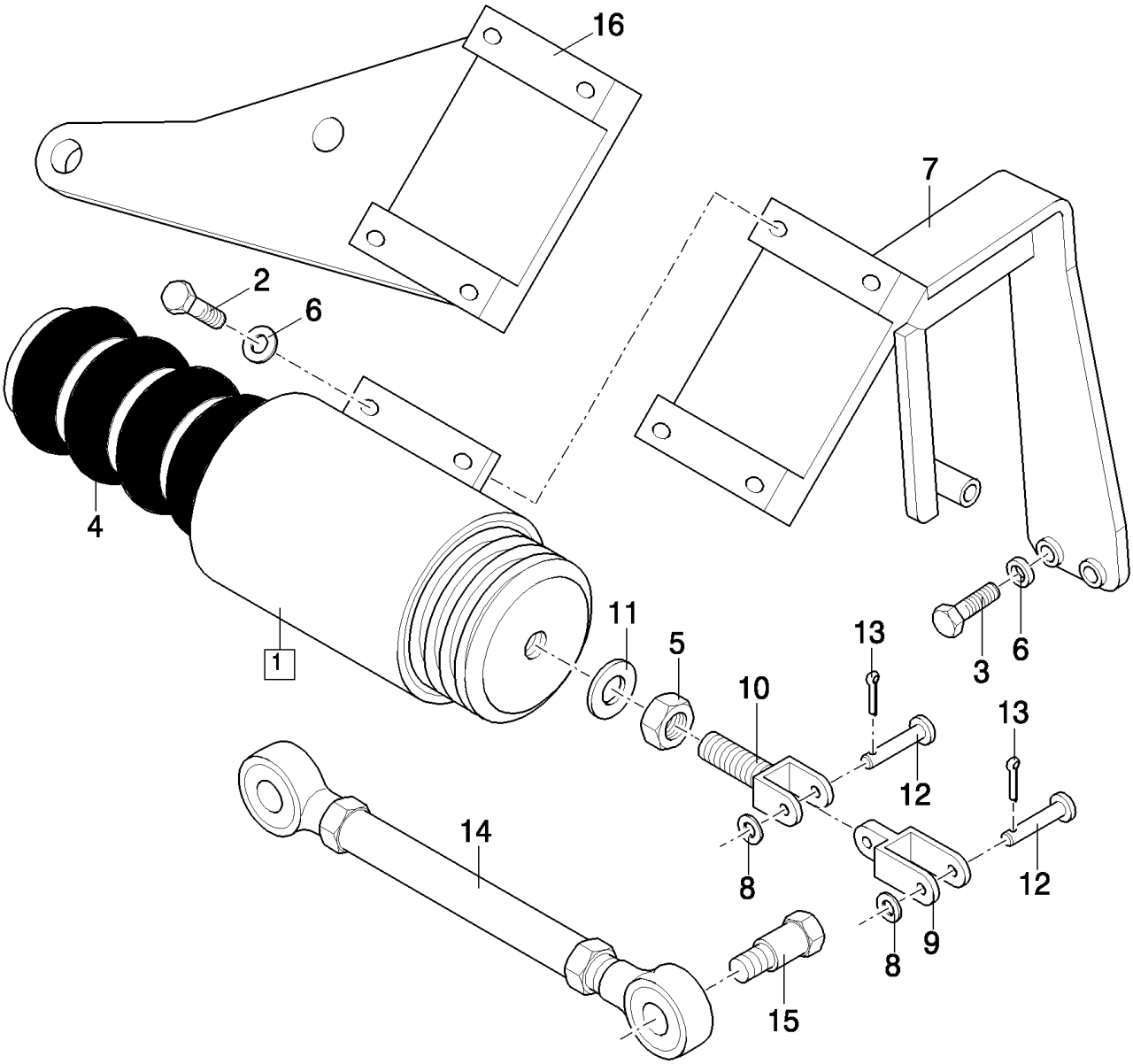

ONLY VALID UNTIL --1076999

TX68 COMBINE - BASE UNIT

0.56.5(01) ELECTRIC STOP ENGINE (NOT FOR TX68PLUS)

ссылка	Номер детали	Кол-во	Описание
1	8017114	1	ELECTROMAGNET, (4,11), FOR ENGINE TYPE 8460 SRI 10 00 A 007
1	8021836	1	ELECTROMAGNET, (4,10,11), FOR ENGINE TYPE 8465 SRI 10 00 A 001
2	16043624	4	BOLT, Hex, M8 x 25, 8.8, Full Thd,
3	10902224	4	BOLT, Hex, M6 x 16, 8.8, Full Thd,
4	98417461	1	BOOT,
5	16100821	1	NUT, M8, Cl 10,
6	11197774	7	WASHER, SPRING, Belleville, M6.4,
7	8006296	1	SUPPORT, , FOR ENGINE TYPE 8460 SRI 10 00 A 007
7	8021834	1	SUPPORT, , FOR ENGINE TYPE 8465 SRI 10 00 A 001
8	14496301	2	WASHER,
9	8108833	1	CLEVIS, , FOR ENGINE TYPE 8460 SRI 10 00 A 007
10	8110822	1	YOKE,
11	11193874	1	WASHER, SPRING, Belleville, M8.4,
12	10033211	2	PIN,
13	10734101	2	PIN, SPLIT (COTTER), M1.6 x 12,
14	8016606	1	TIE-ROD, , FOR ENGINE TYPE 8465 SRI 10 00 A 001
15	8016470	1	SCREW, , FOR ENGINE TYPE 8465 SRI 10 00 A 001
16	8021834	1	SUPPORT, , FOR ENGINE TYPE 8465 SRI 10 00 A 001
3	10979424	2	BOLT, Hex, M6 x 10, 8.8, Full Thd,

ONLY VALID UNTIL --1076999

0.56.5/1(01) ELECTRIC STOP ENGINE - TX68PLUS

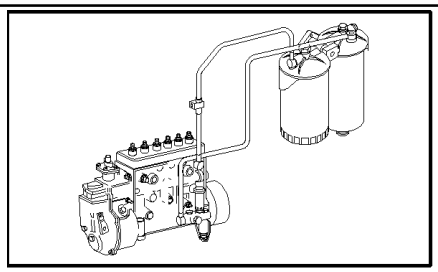

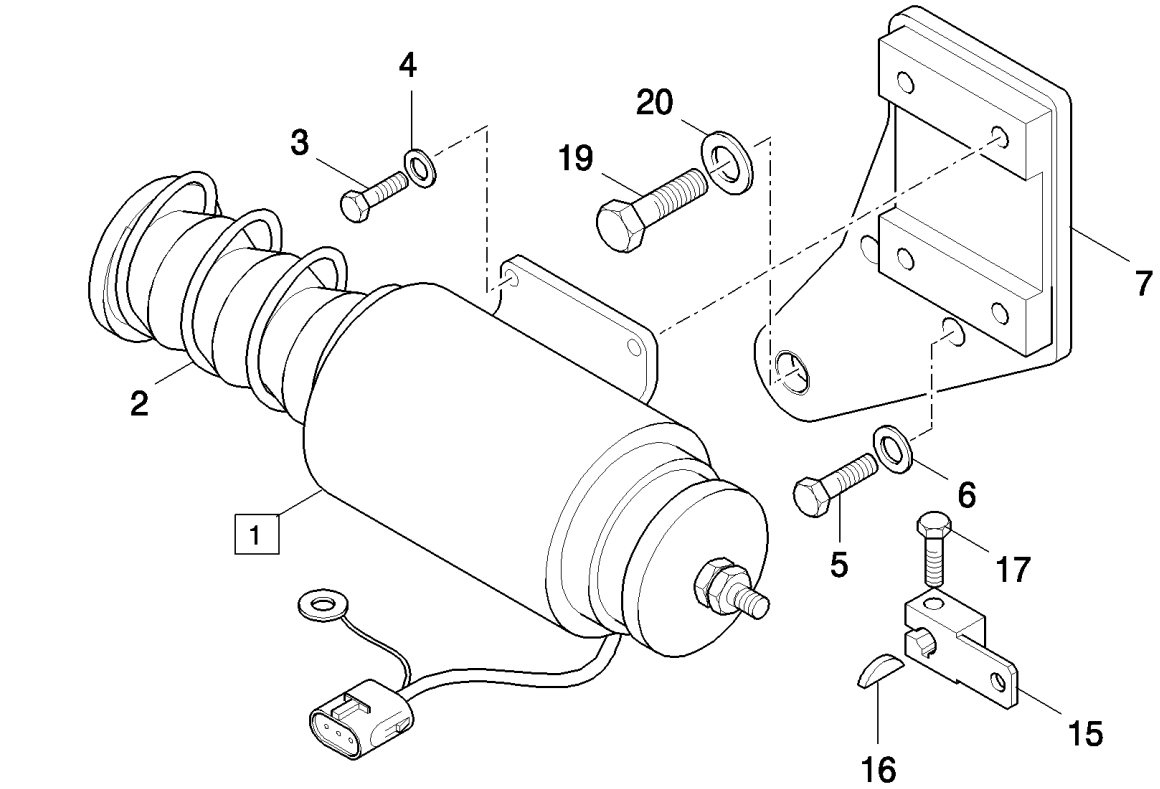

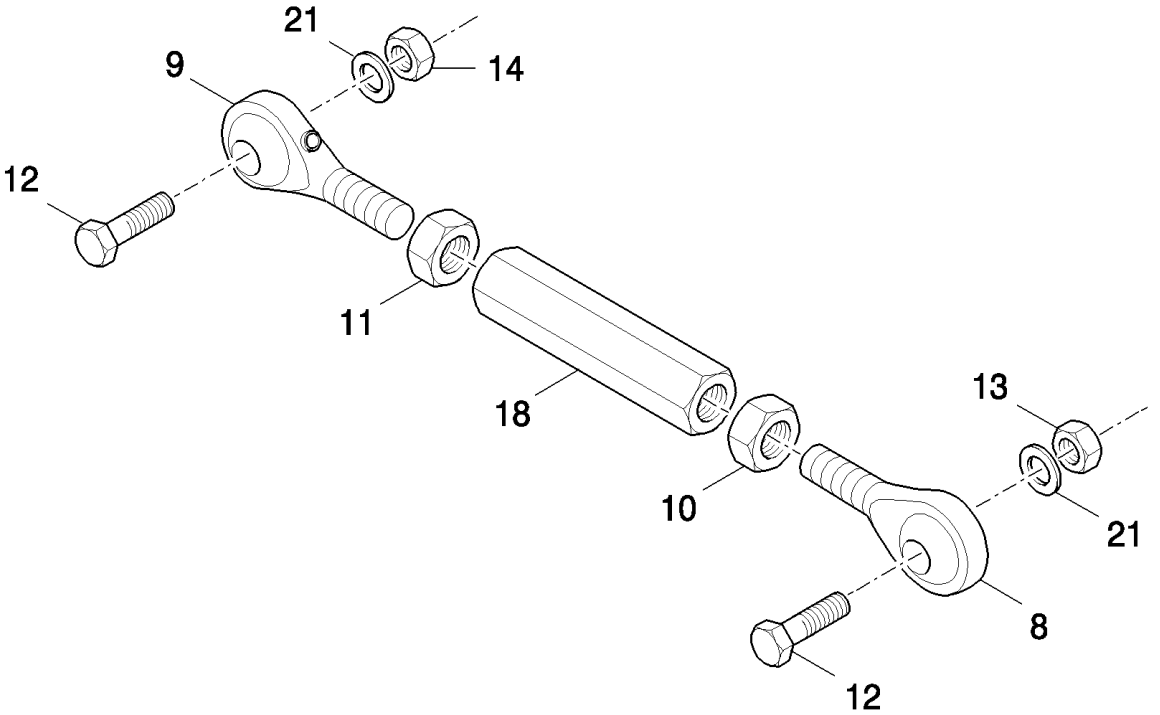

TX68 COMBINE - BASE UNIT

0.56.5/1(01) ELECTRIC STOP ENGINE - TX68PLUS

ссылка	Номер детали	Кол-во	Описание
1	8017114	1	ELECTROMAGNET,
2	98417461	1	BOOT,
3	10902224	4	BOLT, Hex, M6 x 16, 8.8, Full Thd,
4	11197774	4	WASHER, SPRING, Belleville, M6.4,
5	16043430	2	BOLT, Hex, M8 x 20, 10.9,
6	11198179	2	WASHER, SPRING, Belleville, M8.4,
7	8021834	1	SUPPORT,
8	8016587	1	ARTICULATION, RH
9	8016588	1	ARTICULATION, LH
10	15896240	1	NUT, M6, Brass,
11	10789640	1	NUT, M6, Brass, LH,
12	8016470	2	SCREW,
13	17152621	1	NUT,
14	17152721	1	NUT,
15	8108826	1	LEVER,
16	98417458	1	KEY,
17	16602124	1	SCREW,
18	8016413	1	SLEEVE, ADJUSTING,
19	15540424	1	BOLT, Hex, M12 x 1.25 x 30, 8.8, Full Thd,
20	11190774	1	WASHER, SPRING, Belleville, M13,
21	14496301	1	WASHER,

SECTIONS	**SECTIONS**	**SECCIONES**	**AFSNIT**
SEZIONI	**ABSCHNITTE**	**SECÇÕES**	**SECTIES**

SEC. 1

TX 68

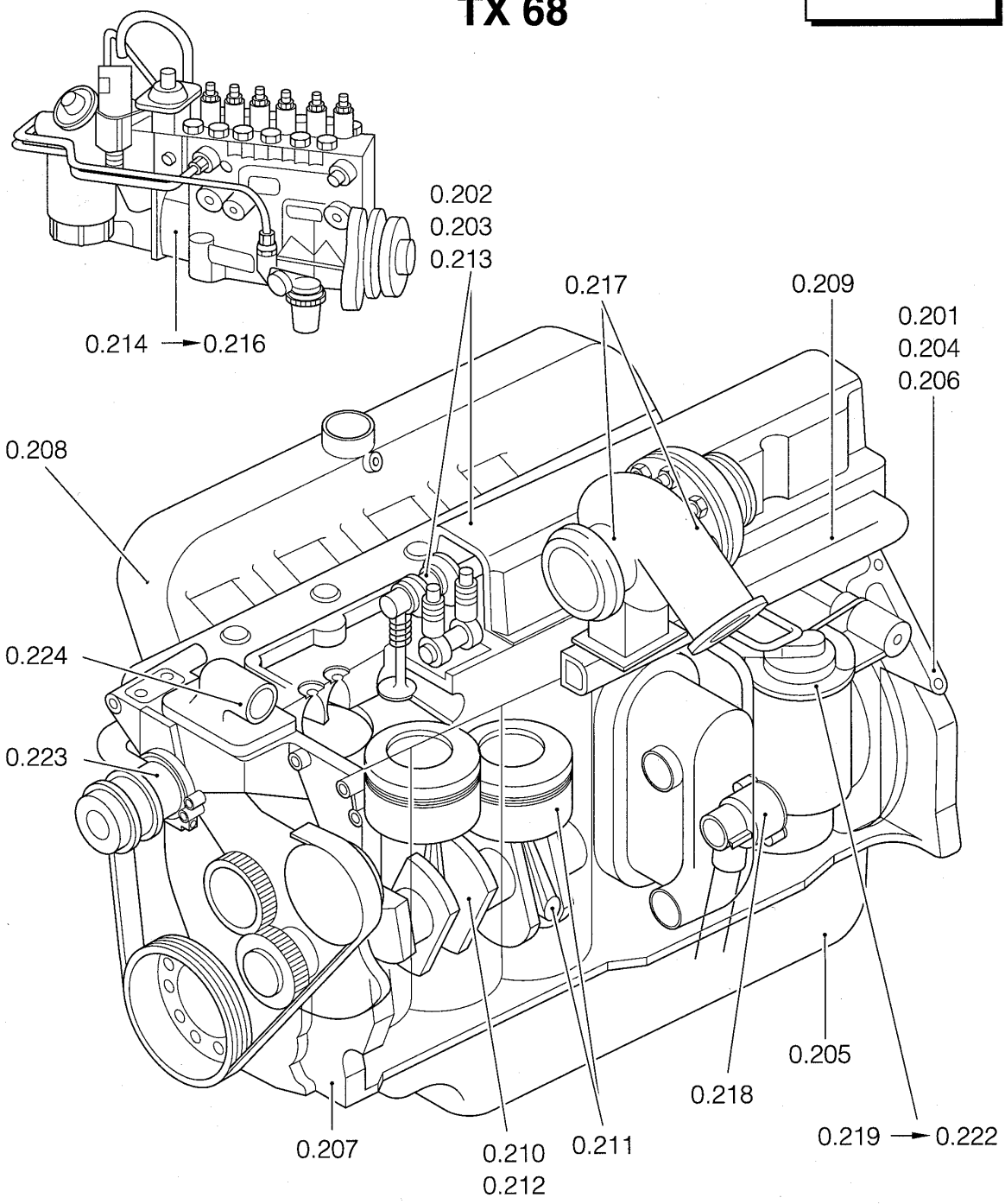

ссылка	Номер детали	Кол-во	Описание

00.201(01) CYLINDER BLOCK - CYLINDER HEAD - FROM --1077001 (NOT FOR TX68PLUS) UNTIL --1245999

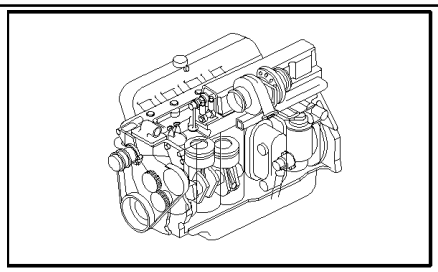

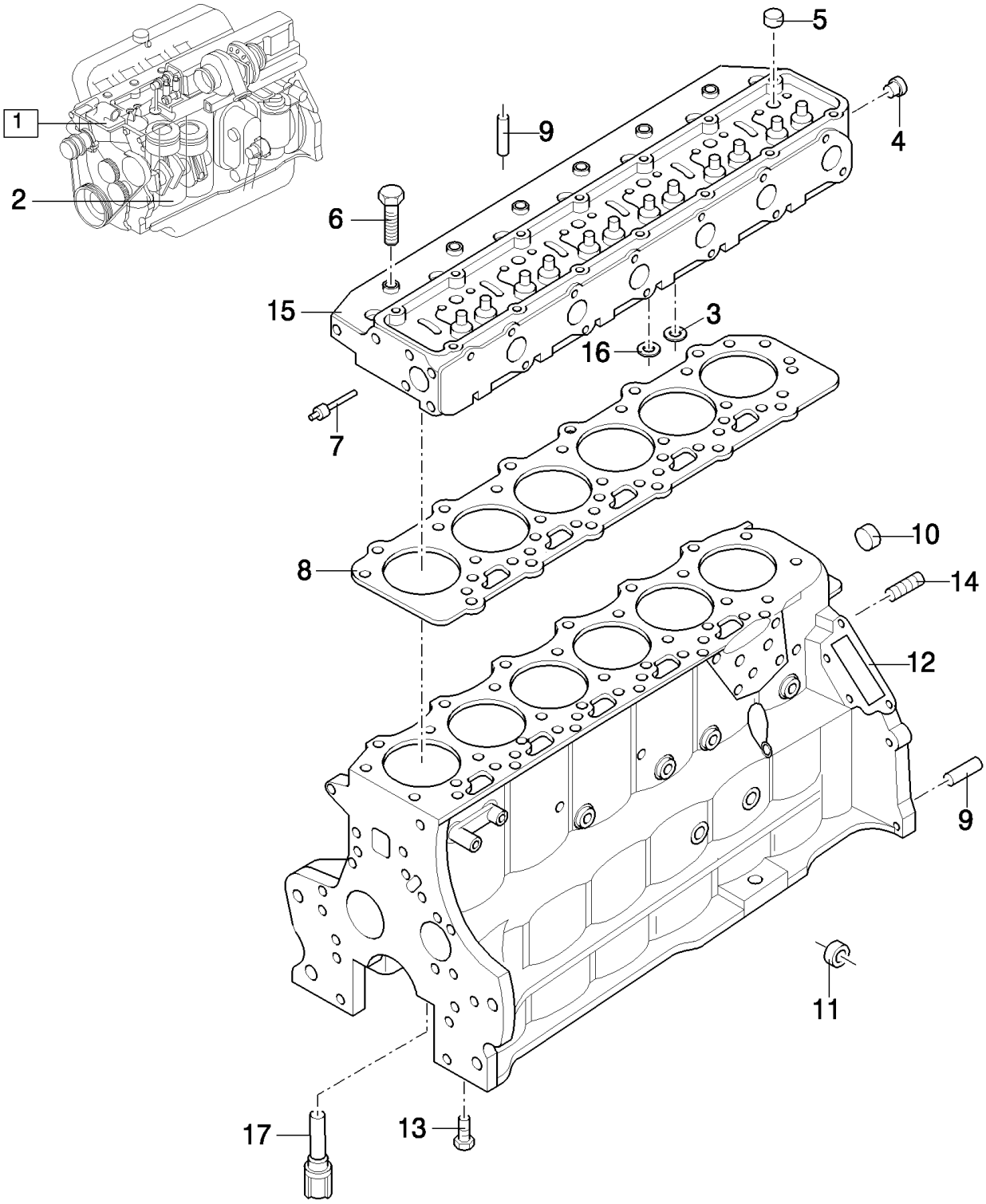

TX68 COMBINE - BASE UNIT

00.201(01) CYLINDER BLOCK - CYLINDER HEAD - FROM --1077001 (NOT FOR TX68PLUS) UNTIL --1245999

ссылка	Номер детали	Кол-во	Описание
1	87801664	1	ENGINE, COMPLETE (2)
2	87801754	1	ENGINE, SHORT,
3	87841162	6	VALVE SEAT, STD-INT
3	87841163	AR	VALVE SEAT, .254MM
3	87841164	AR	VALVE SEAT, .508MM
4	83957025	1	PLUG, 44.5MM
5	83957021	11	PLUG, 28.7MM
6	87801691	19	BOLT, SHORT
6	87801690	7	BOLT, LONG
7	83960218	2	DOWEL, .676" x .44"
8	87801753	1	GASKET, CYLINDER HEAD,
9	86505157	2	DOWEL, 1/2" x 1",
10	83957022	AR	PLUG, 30MM
10	83957023	3	PLUG, 38.0MM
10	83957024	AR	PLUG, 39.6MM
10	83957025	1	PLUG, 44.5MM
10	83957026	AR	PLUG, 46.0MM
11	83956679	1	PLUG, .824"
12	87840788	1	BLOCK,
13	87801692	14	BOLT, Cap, Flg Hd., 9/16"-12 x 122mm
14	390488S36	1	PLUG, HS, 1/2"-14 x .42"
15	87841170	1	CYLINDER HEAD,
16	81865194	6	INSERT, Exhaust, Standard
16	81865195	AR	INSERT, .254MM
16	81865196	AR	INSERT, .508MM
17	82851759	6	PLUG,

00.202(01) ROCKER COVER - FROM --1077001 (NOT FOR TX68PLUS) UNTIL --1245999

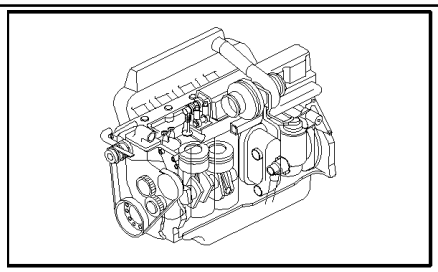

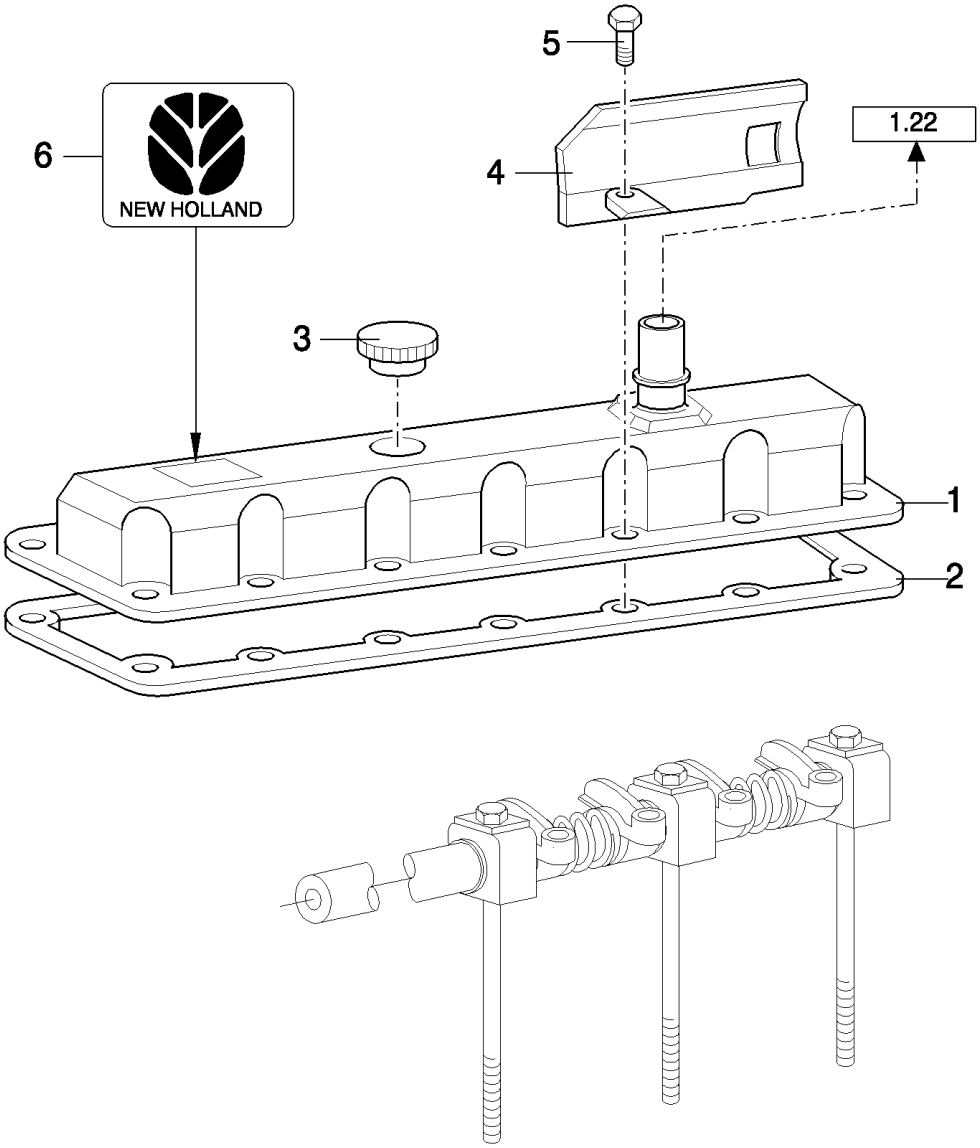

TX68 COMBINE - BASE UNIT

00.202(01) ROCKER COVER - FROM --1077001 (NOT FOR TX68PLUS) UNTIL --1245999

ссылка	Номер детали	Кол-во	Описание
1	87800986	1	COVER,
2	83976376	1	GASKET,
3	E9AE6766AA	1	COVER, CAP,
4	F2NN6N654AB	1	SHIELD,
5	83949109	14	BOLT, Cap, Flg Hd, G5, 5/16"-18 x .62"
6	82005370	1	DECAL,

00.203(01) ROCKER COVER - FROM --1077001 (NOT FOR TX68PLUS) UNTIL --1245999

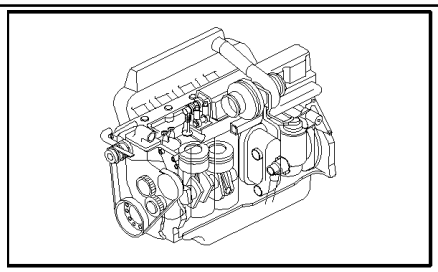

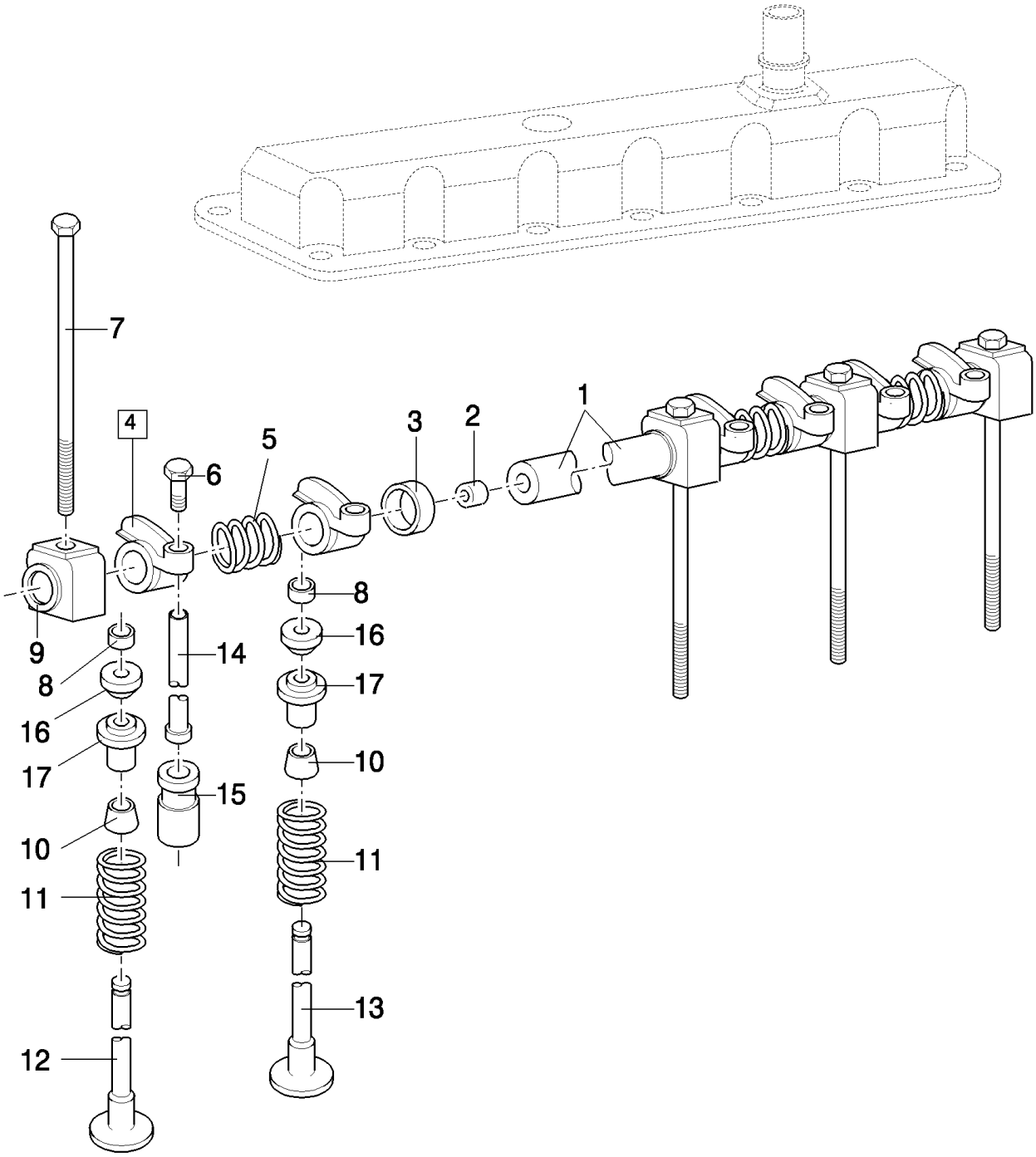

TX68 COMBINE - BASE UNIT

00.203(01) ROCKER COVER - FROM --1077001 (NOT FOR TX68PLUS) UNTIL --1245999

ссылка	Номер детали	Кол-во	Описание
1	D5NN6563A	1	SHAFT,
2	376099S	2	PLUG, Cup, .755"
3	C7NN6590A	6	SPACER,
4	E5NN6529AA	12	ROCKER ARM, (6)
5	C5NE6587A	6	SPRING,
6	87801302	12	SCREW,
7	87801690	7	BOLT, 9/16"-12x7.91
8	F2NN6518AA	24	KEY,
9	D5NN6531A	7	SUPPORT,
10	87840154	12	SEAL,
11	E9NN6513BA	12	SPRING,
12	82850530	6	VALVE, ENGINE, INLET, STD,
12	82850528	6	VALVE, INLET, OVERSIZE, .015" (.381 mm)
13	F0NN6505AD	6	VALVE, ENG EXHAUST, STD,
13	F0NN6505CD	6	VALVE, EXHAUST, OVERSIZE, .015" (.381 mm)
14	E9NN6567AC	12	ROD,
15	E4HN6500AA	12	TAPPET,
16	C3AE6517A	12	SLEEVE, EXHAUST
17	C6AE6514A1	12	RETAINER, EXHAUST

00.204(01) CRANKCASE AND CYLINDER - FROM --1077001 (NOT FOR TX68PLUS) UNTIL --1245999

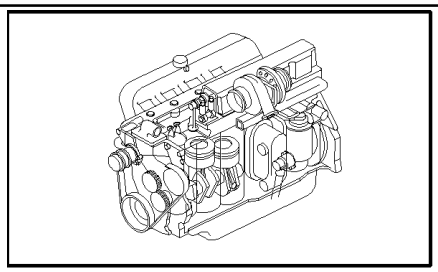

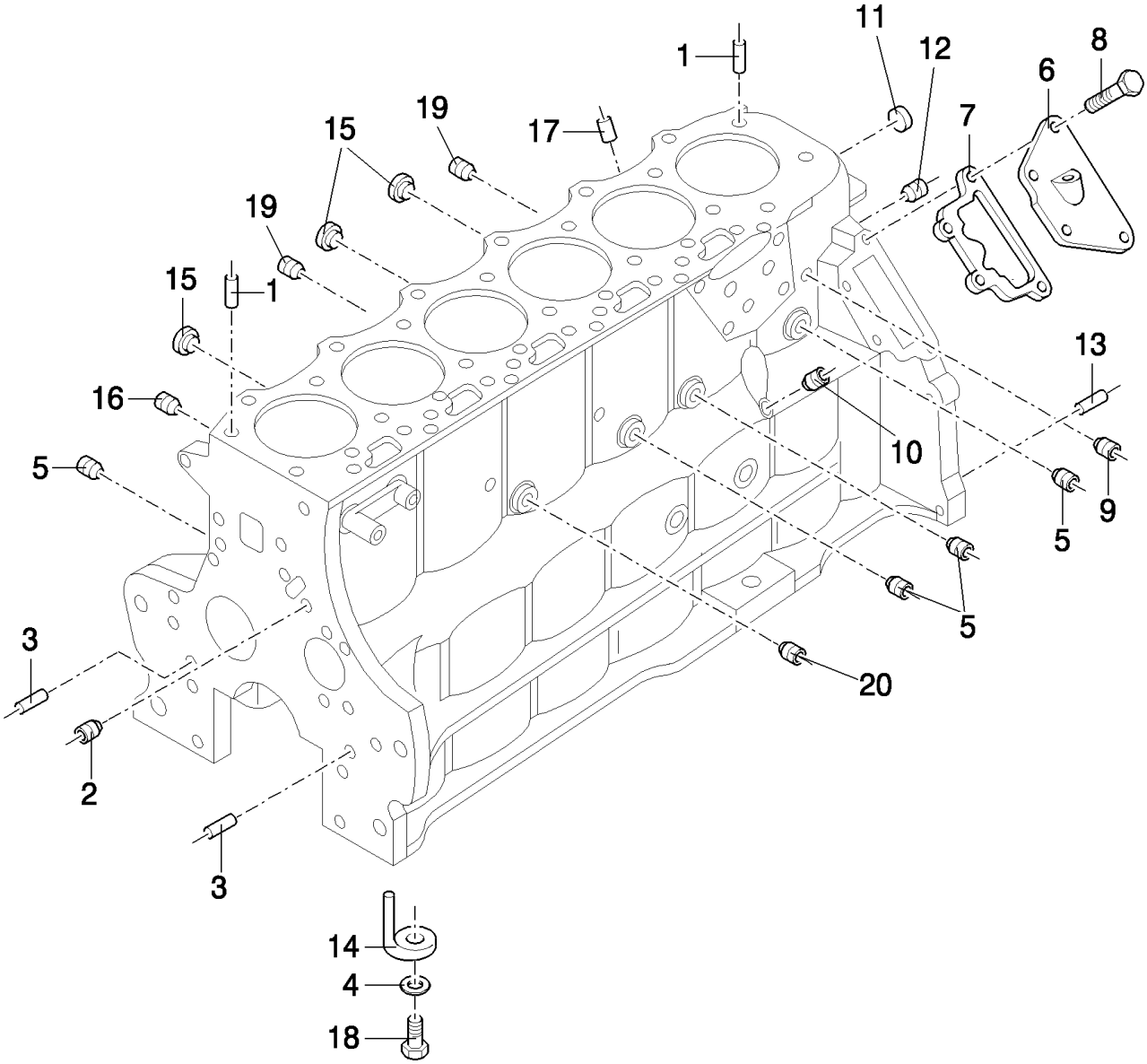

TX68 COMBINE - BASE UNIT

00.204(01) CRANKCASE AND CYLINDER - FROM --1077001 (NOT FOR TX68PLUS) UNTIL --1245999

ссылка	Номер детали	Кол-во	Описание
1	83960218	2	DOWEL, .676" x .44"
2	83956679	1	PLUG, .824"
3	81808472	2	DOWEL, 3/8"x1-1/8"
4	87800929	1	PLUG, HH, 1/8"-27 x 1.60"
5	81868411	3	PLUG, Pipe, 1/4"-18
6	F2NND852BA	1	COVER,
7	81822547	1	GASKET,
8	56540S36	4	BOLT, Cap, Flg Hd., G5, 3/8"-16 x 1"
9	82851790	1	PLUG, SH, 3/8"-18 x .42"
10	82851791	1	PLUG, HS, 3/8"-18
11	83957025	1	PLUG, 1-3/4"
12	F2NN6C057AA	1	PLUG, SH, 1/2"-14 x .42"
13	86505157	2	DOWEL, 1/2" x 1",
14	87840357	6	NOZZLE, LUB. OIL JET,
15	83957023	3	PLUG, 1-1/2"
16	81868410	1	PLUG, 1/8"-27
17	81876802	1	PLUG, OIL LEVEL INDICATOR
18	56521S36	1	SCREW, Cap Flg Hd, G5, 5/16"-18 x 7/8"
19	F3NN6C057AA	2	PLUG,

00.205(01) OIL SUMP - FROM --1077001 (NOT FOR TX68PLUS) UNTIL --1245999

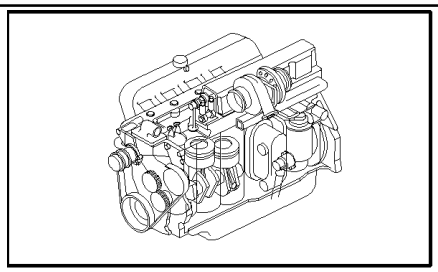

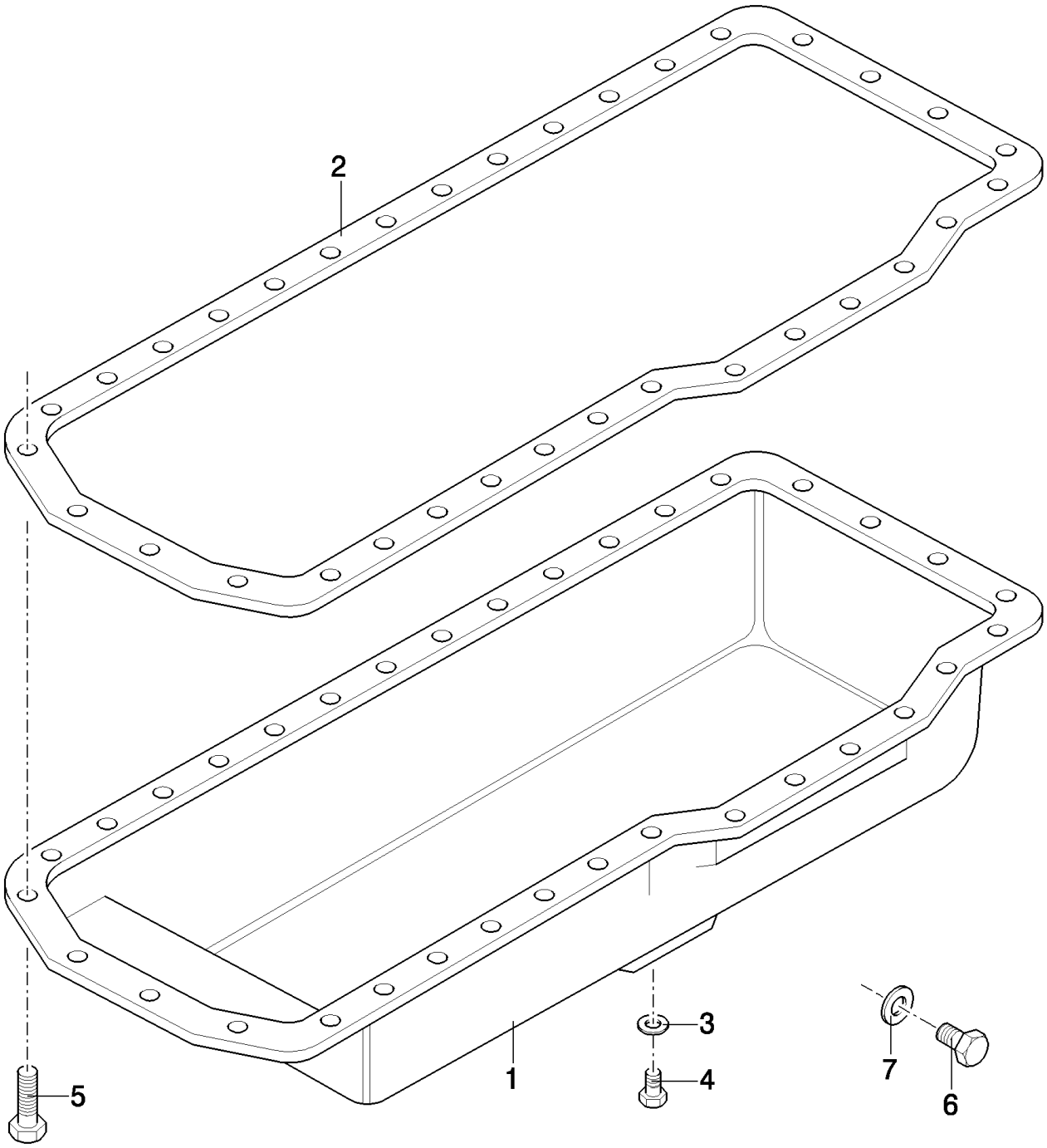

TX68 COMBINE - BASE UNIT

00.205(01) OIL SUMP - FROM --1077001 (NOT FOR TX68PLUS) UNTIL --1245999

ссылка	Номер детали	Кол-во	Описание
1	F1NN6675CC	1	PAN, ENGINE OIL,
2	F1NN6710AA	1	GASKET,
3	C9NN6734A	1	GASKET, DRAIN PLUG
4	81822147	1	PLUG, OIL DRAIN
5	F2NN6N759AA	34	BOLT, Cap Flg Hd., 3/8"-16 UNRC-2A x 3/4"
6	E850100S71	1	PLUG, M8 x 1.5 x 9
7	F2NN6734AA	1	GASKET,

00.206(01) HOUSING AND COVERS - FROM --1077001 (NOT FOR TX68PLUS) UNTIL --1245999

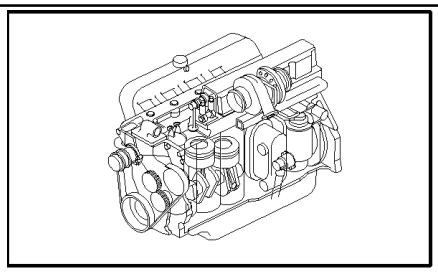

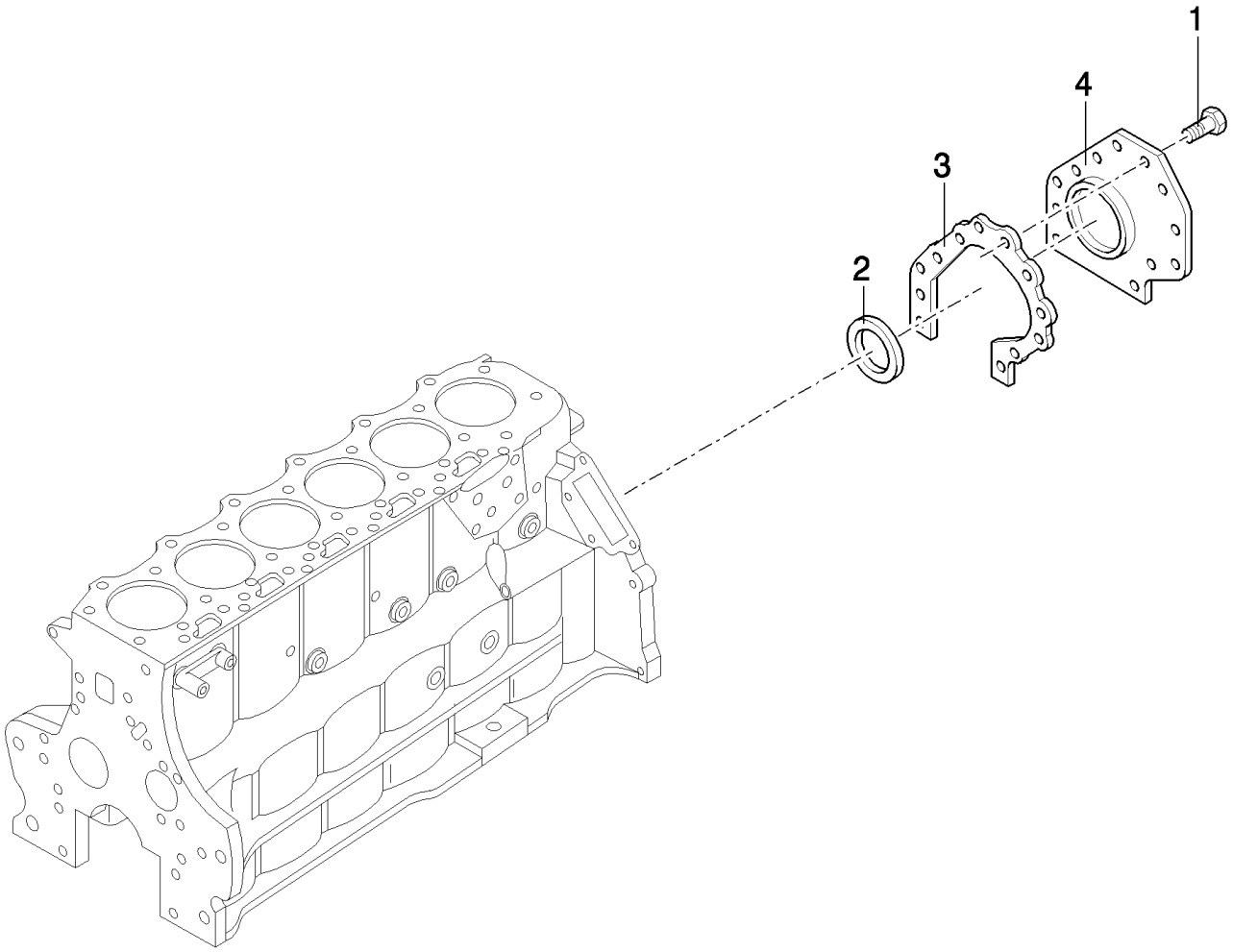

TX68 COMBINE - BASE UNIT

00.206(01) HOUSING AND COVERS - FROM --1077001 (NOT FOR TX68PLUS) UNTIL --1245999

ссылка	Номер детали	Кол-во	Описание
1	81876604	12	BOLT, Cap, Flg Hd, G5, 5/16"-18 x .62"
2	83955247	1	SEAL,
3	81865591	1	GASKET,
4	81876599	1	PLATE,

00.207(01) HOUSING AND COVERS - FROM --1077001 (NOT FOR TX68PLUS) UNTIL --1245999

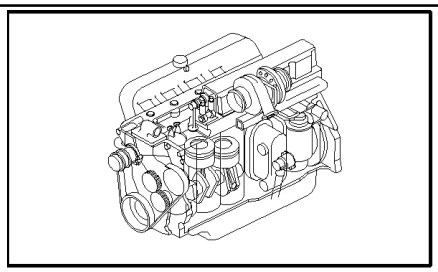

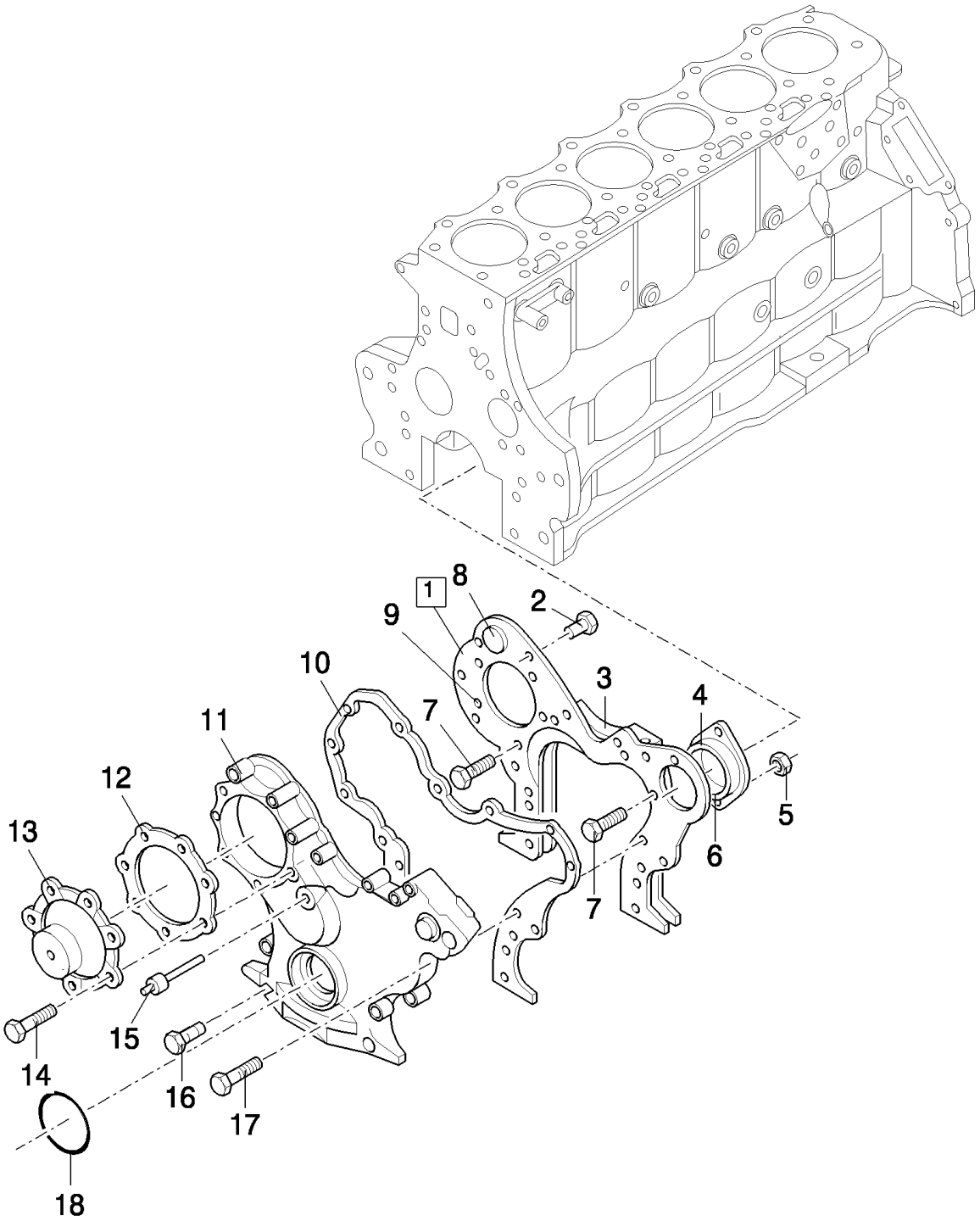

TX68 COMBINE - BASE UNIT

00.207(01) HOUSING AND COVERS - FROM --1077001 (NOT FOR TX68PLUS) UNTIL --1245999

ссылка	Номер детали	Кол-во	Описание
1	F2NN6N059AE	1	PLATE, FRONT COVER (9)
2	56540S36	4	BOLT, Cap, Flg Hd., G5, 3/8"-16 x 1"
3	F2NN6C045AC	1	GASKET,
4	C5NE3B681A	1	COVER,
5	33771S36	2	NUT, 3/8"-16
6	510137	1	O-RING, -236, 70 Duro, 3.234" ID x .139" Thk,
7	83958244	4	SCREW, Cap, HH, G5, Self-Locking, 5/16"-18 x 7/8"
8	F2NN6N088BA	1	PLUG, 1 1/2"
9	81876724	4	BOLT, 3/8"-16x1-1/2"
10	F2NN6020BA	1	GASKET,
11	87841144	1	COVER,
12	81876951	1	GASKET,
13	87840219	1	COVER,
14	83925618	7	BOLT, Cap, Reduced, Flg Hd., UBS, 3/8"-16 x 3/4"
15	E1TN6023AA	1	POINT,
16	56545S36	10	SCREW, 3/8"-16x2-1/4"
17	56547S36	2	BOLT, 3/8"-16x2-3/4"
18	87800695	1	SEAL, OIL,
18	87802236	1	SEAL, OIL,

00.208(01) INTAKE MANIFOLD - FROM --1077001 (NOT FOR TX68PLUS) UNTIL --1245999

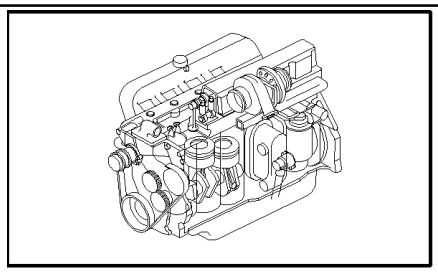

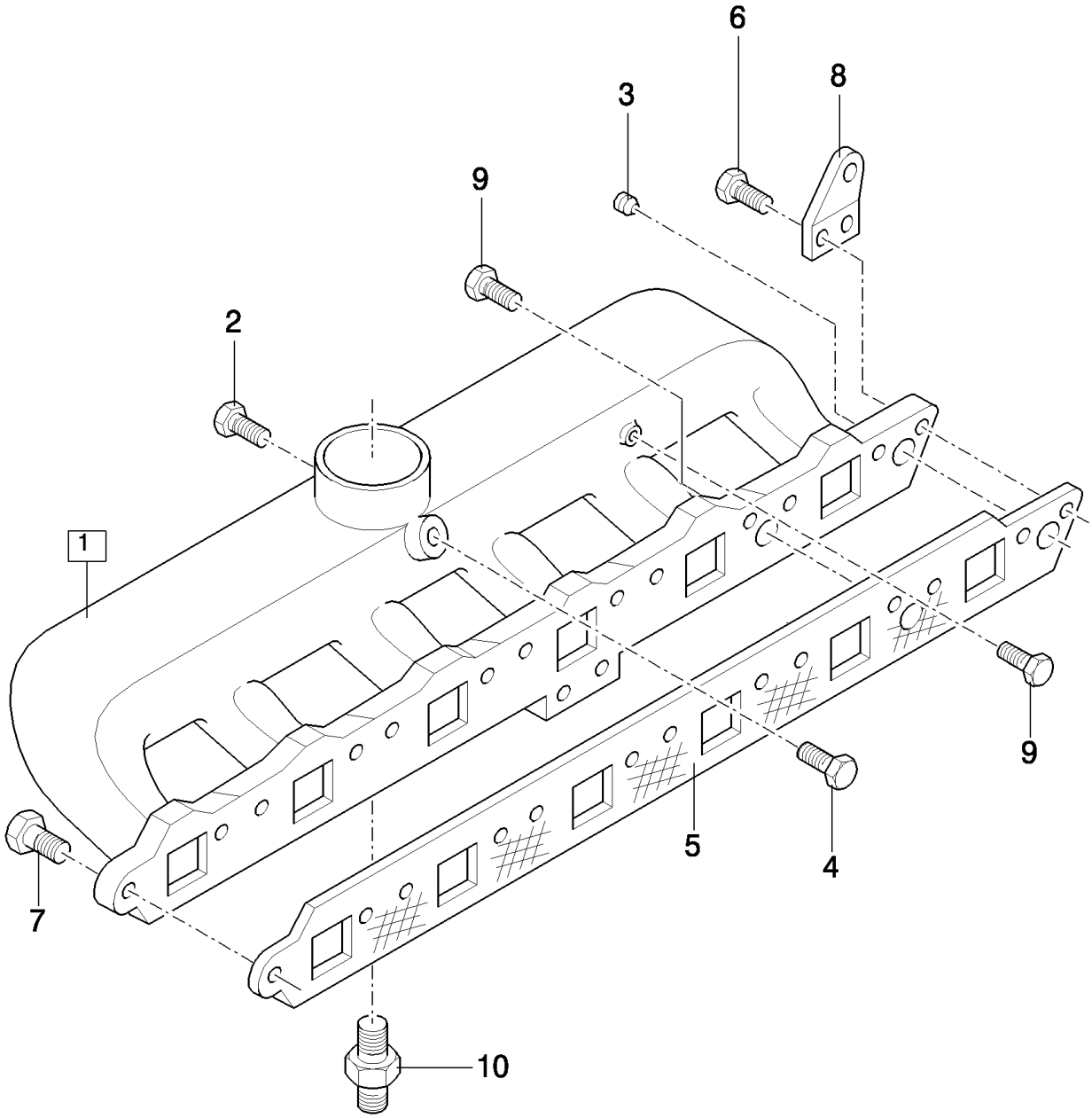

TX68 COMBINE - BASE UNIT

00.208(01) INTAKE MANIFOLD - FROM --1077001 (NOT FOR TX68PLUS) UNTIL --1245999

ссылка	Номер детали	Кол-во	Описание
1	87840147	1	MANIFOLD, INLET, (2 to 4,10)
2	88071	2	PLUG, Pipe, 1/8"-27
3	87840S36	1	PLUG, 3/4"-14x.57"
4	81878516	1	PLUG,
5	87840759	1	GASKET,
6	83958605	2	BOLT, Flg Hd., G5, 3/8"-16 x 1-1/2"
7	81868740	11	BOLT, Flg Hd, G5, 3/8"-16 x 1-1/4"
8	82932534	1	PLATE,
9	87652S36	2	PLUG, HH, 3/8"-18
10	390275S	1	FITTING,

00.209(01) EXHAUST MANIFOLD - FROM --1077001 (NOT FOR TX68PLUS) UNTIL --1245999

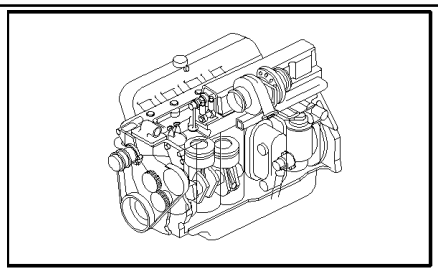

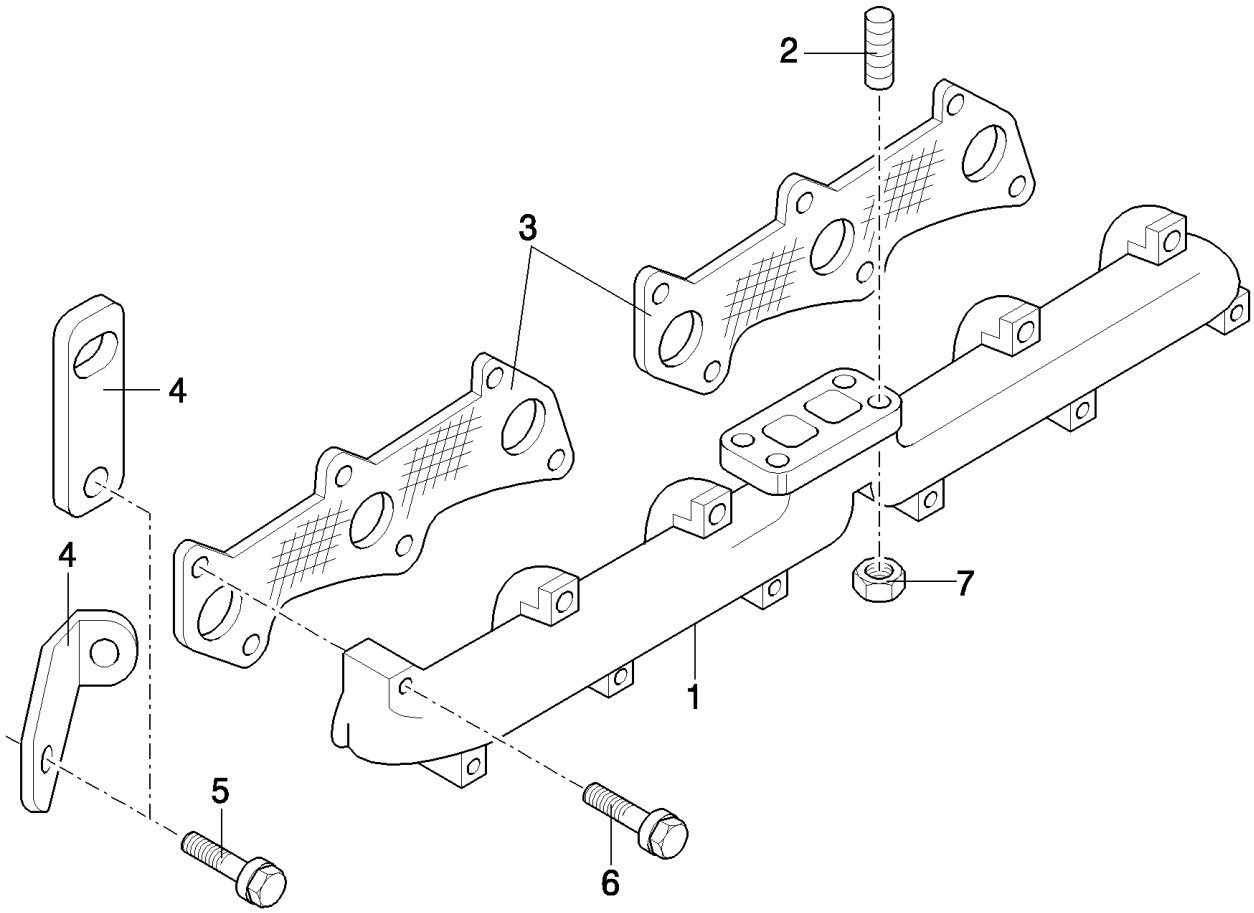

TX68 COMBINE - BASE UNIT

00.209(01) EXHAUST MANIFOLD - FROM --1077001 (NOT FOR TX68PLUS) UNTIL --1245999

ссылка	Номер детали	Кол-во	Описание
1	F2NN9430BC	1	MANIFOLD, EXHAUST,
2	F2NN6N873AA	4	STUD, 3/8"-24-16x1.44"
3	87801658	2	GASKET, MANIFOLD,
4	82852825	1	PLATE,
5	56540S36	2	BOLT, Cap, Flg Hd., G5, 3/8"-16 x 1"
6	87802145	12	BOLT, 3/8"-16x2-1/4"
6	87802145	12	BOLT,
7	E8HN6N606AA	4	NUT, 3/8"-24

00.210(01) CRANKSHAFT - FROM --1077001 (NOT FOR TX68PLUS) UNTIL --1245999

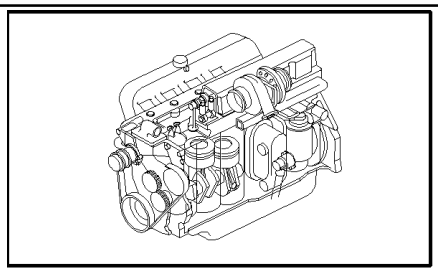

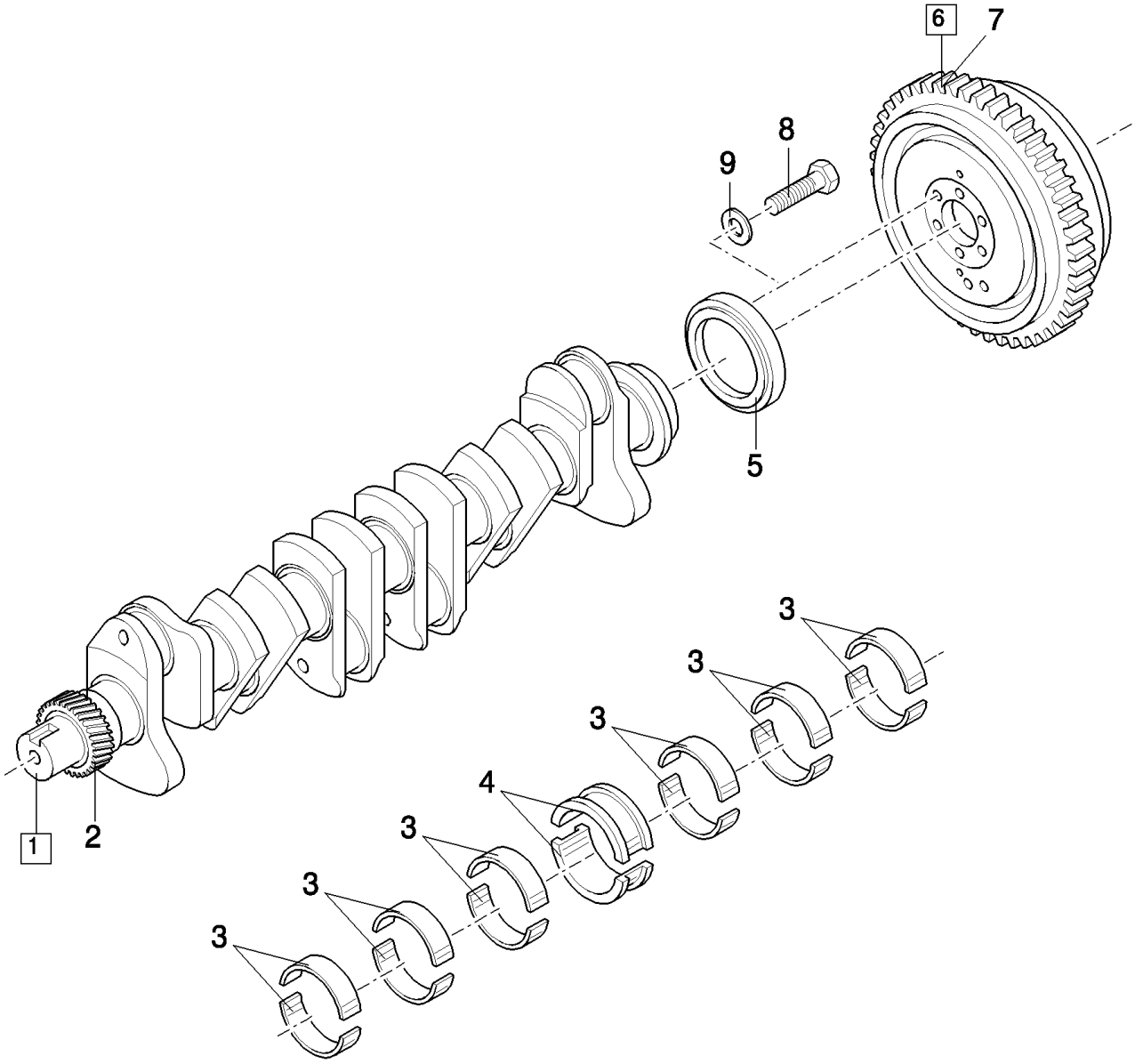

TX68 COMBINE - BASE UNIT

00.210(01) CRANKSHAFT - FROM --1077001 (NOT FOR TX68PLUS) UNTIL --1245999

ссылка	Номер детали	Кол-во	Описание
1	F2NN6300AA	1	CRANKSHAFT, (2)
2	E9HN6306BA	1	GEAR, DRIVING,
3	87790342	6	SET OF MAIN BRGS.STD,
3	87790343	AR	SET OF MAIN BRGS - 0.762,
3	87790344	AR	SET OF MAIN BRGS -0.254,
3	87790345	AR	SET OF MAIN BRGS -0.508mm,
3	87790346	AR	SET OF MAIN BRGS - 0.762,
3	87790347	AR	SET OF MAIN BRGS - 1.016,
4	87790362	1	SET, THRUST WASHERS (STD),
4	87790363	1	SET OF MAIN BRGS - 1.016,
4	87790364	1	SET, THRUST WASHERS +0.25,
4	87790365	1	SET,THRUST WASHERS +0.508,
4	87790366	1	SET OF MAIN BRGS - 0.762,
4	87790367	1	SET, THRUST WASHERS+0.102,
5	83955247	1	SEAL,
6	9825192	1	FLYWHEEL, ENGINE, (7)
7	83949153	1	GEAR, RING,
8	280690	8	BOLT, Hex, 9/16"-18 x 1 1/4", G5, Full Thd,
9	140047	8	WASHER, LOCK,

00.211(01) PISTON AND CONNECTING RODS - FROM --1077001 (NOT FOR TX68PLUS) UNTIL --1245999

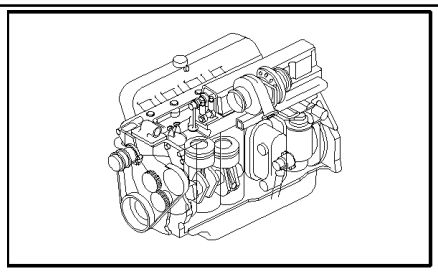

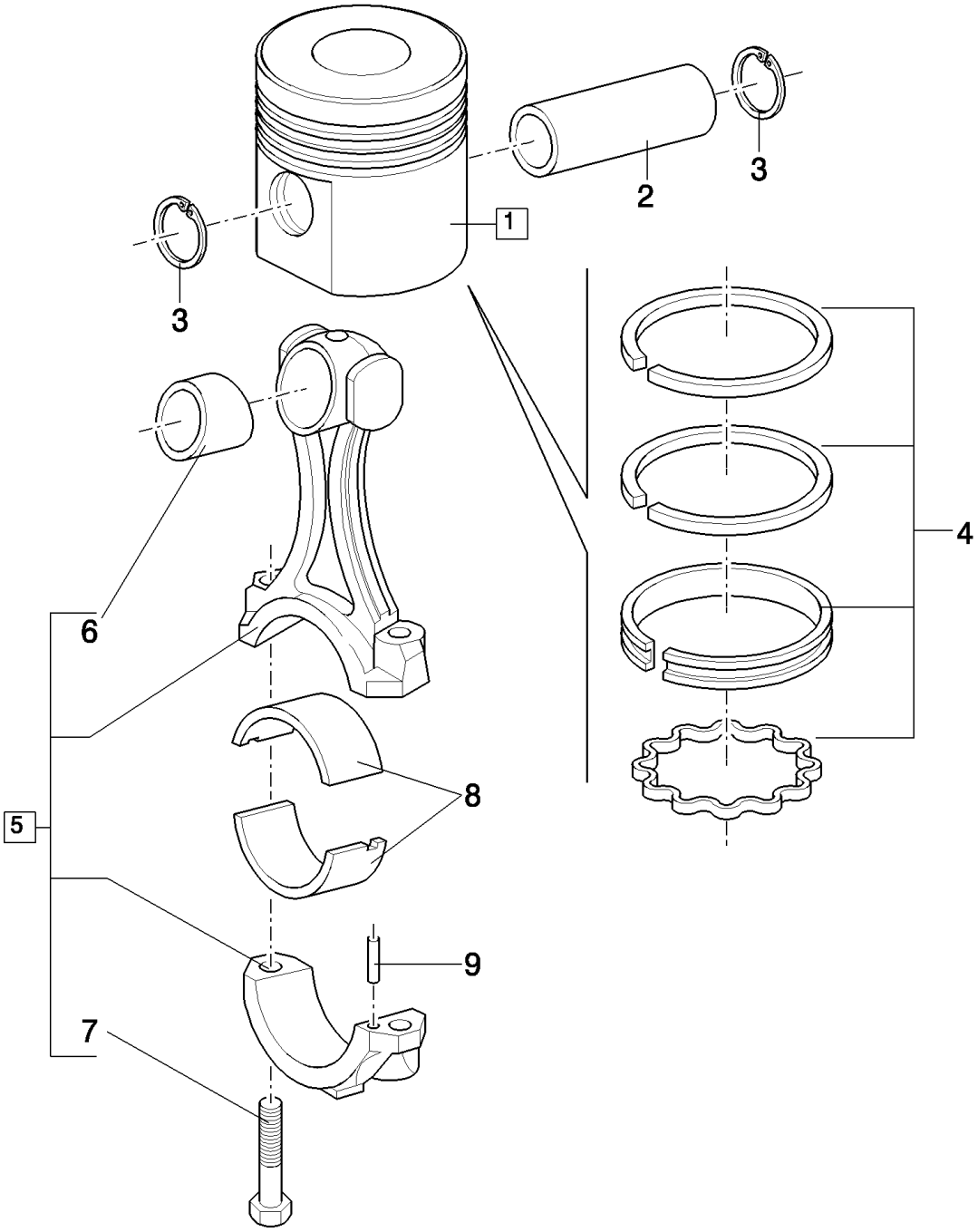

TX68 COMBINE - BASE UNIT

00.211(01) PISTON AND CONNECTING RODS - FROM --1077001 (NOT FOR TX68PLUS) UNTIL --1245999

ссылка	Номер детали	Кол-во	Описание
1	87801847	6	KIT, PISTON & RINGS, (2,3)
2	87801743	6	PIN, PISTON,
3	97627S	12	RING, SNAP, 1.75", Int, #175, 1.75", Int, #175
4	87801086	6	KIT, PISTON RINGS,
5	87801221	6	ROD, CONNECTING, (6,7)
6	87840539	6	BUSHING,
7	87802307	12	SCREW, Cap, HH, G9, 1/2"-20 x 2-3/16"
8	82845263	6	SET, CONN ROD BRGS (STD),
8	82845270	AR	SET OF CONN ROD BRGS U/S, .010
8	82845271	AR	SET OF CONN ROD BRGS U/S, .020
8	82845272	AR	SET OF CONN ROD BRGS U/S, .030
8	82845273	AR	SET OF CONN ROD BRGS U/S, .040
9	83991680	12	PIN,

00.212(01) CRANKSHAFT DRIVE - FROM --1077001 (NOT FOR TX68PLUS) UNTIL --1245999

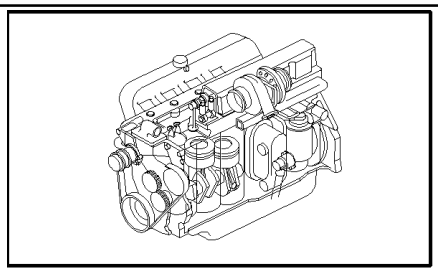

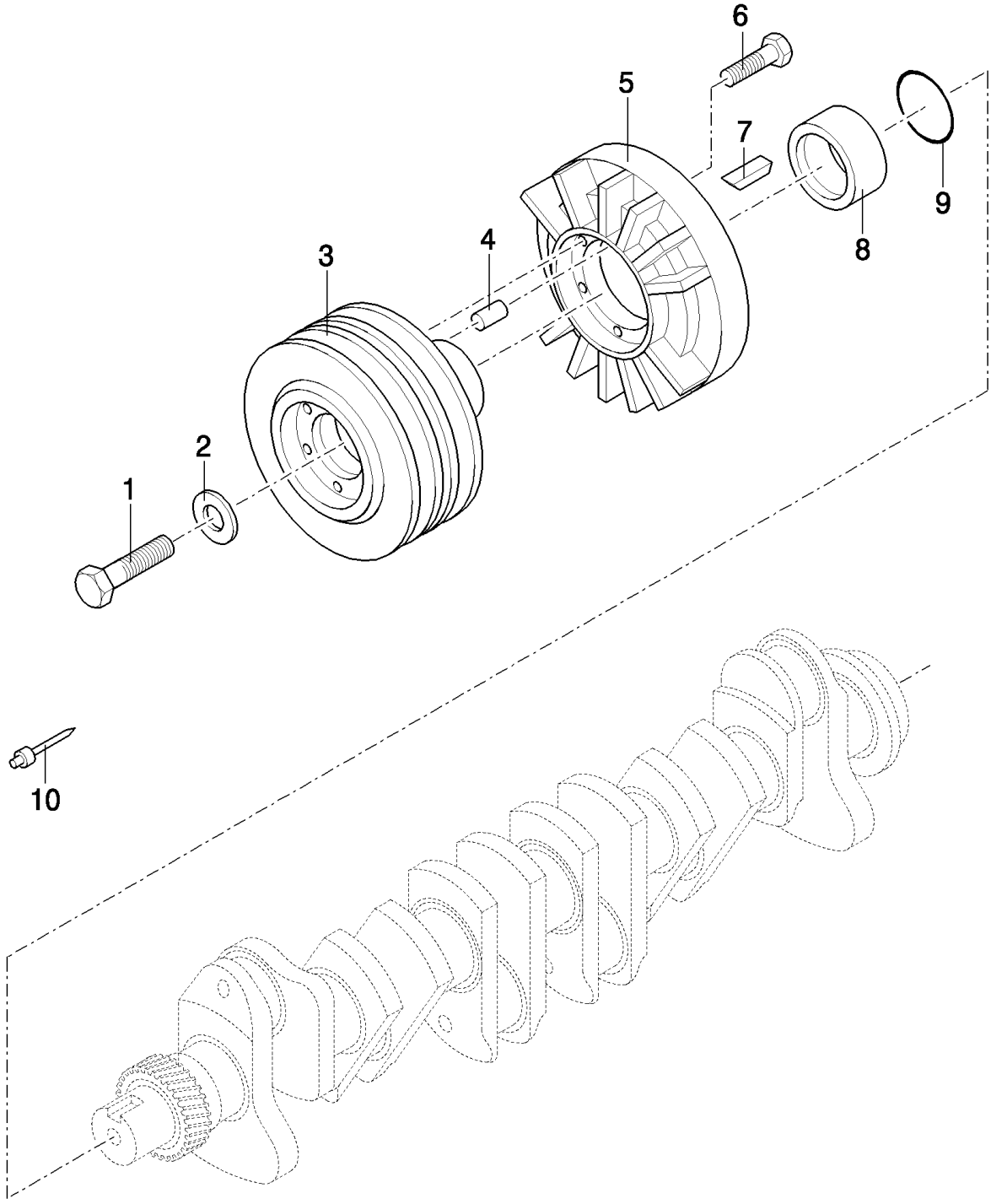

TX68 COMBINE - BASE UNIT

00.212(01) CRANKSHAFT DRIVE - FROM --1077001 (NOT FOR TX68PLUS) UNTIL --1245999

ссылка	Номер детали	Кол-во	Описание
1	82895561	1	SCREW, Cap, HH, G5, 3/4"-16 x 1-3/4"
2	83990589	1	WASHER, 3/4"
3	87801404	1	PULLEY,
4	73236S2	1	DOWEL, 1/4"x1/2"
5	F0HN6316AB	1	DAMPER,
6	83948055	8	SCREW, 7/16"-14x3/4"
7	87802616	1	KEY, 3/8"x5/16"x1.91
8	87800707	1	SPACER,
9	87137S96	1	O-RING,
10	E1TN6023AA	1	POINT,

00.213(01) DRIVE-GEARING TAPPETS AND PUSHRODS - FROM --1077001 (NOT FOR TX68PLUS) UNTIL --1245999

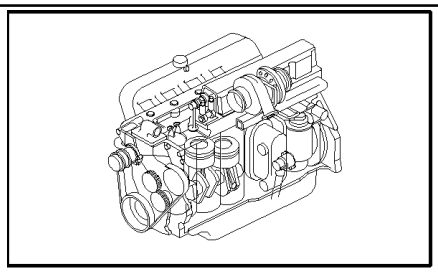

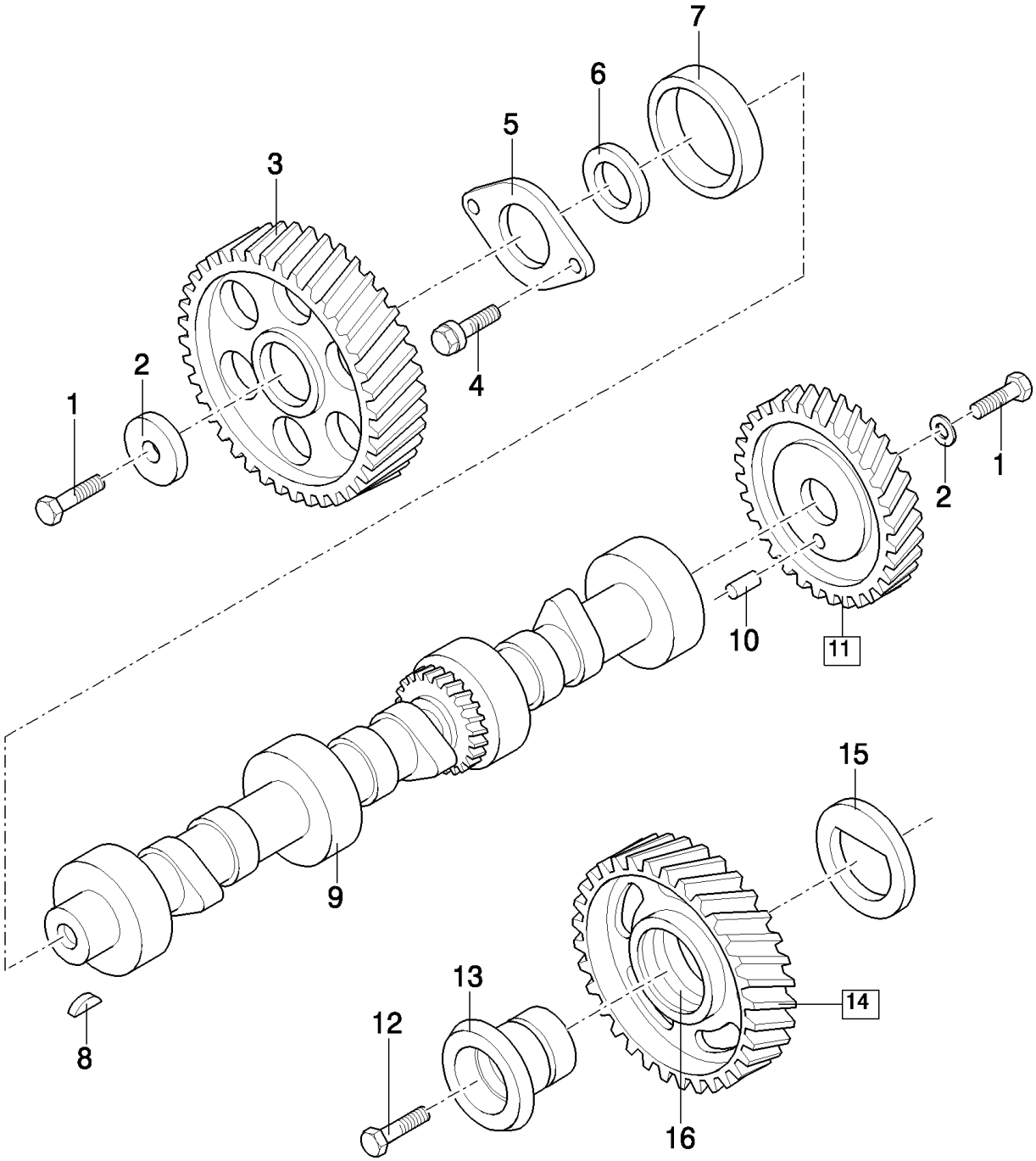

TX68 COMBINE - BASE UNIT

00.213(01) DRIVE-GEARING TAPPETS AND PUSHRODS - FROM --1077001 (NOT FOR TX68PLUS) UNTIL --1245999

ссылка	Номер детали	Кол-во	Описание
1	83909101	2	SCREW, Cap, Flg Hd., G5, 7/16"-14 x 1-1/4"
2	81804024	2	WASHER,
3	E9HN6N251AA	1	GEAR,
4	86500692	2	BOLT, Hex, 3/8"-16 x 3/4", G8, Full Thd,
5	83957730	1	PLATE,
6	87802905	1	SPACER,
7	87800499	7	BEARING, CAMSHAFT,
8	74178S	1	KEY, WOODRUFF, #9, 3/16" x 3/4", HT, 3/16"x3/4"
9	F2NN6250AB	1	CAMSHAFT,
10	81877662	1	DOWEL,
11	83937074	1	GEAR, (10)
12	81876648	1	BOLT,
12	82852337	1	SCREW,
13	87840404	1	ADAPTER,
14	83992735	1	GEAR, (16)
15	87840406	1	PLATE, WEAR,
16	83923678	1	BUSHING,

00.214(01) FUEL SYSTEM WITH INJECTION PUMP - FROM --1077001 (NOT FOR TX68PLUS) UNTIL --1245999

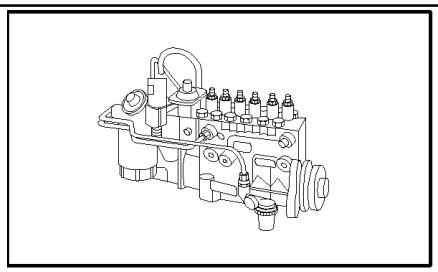

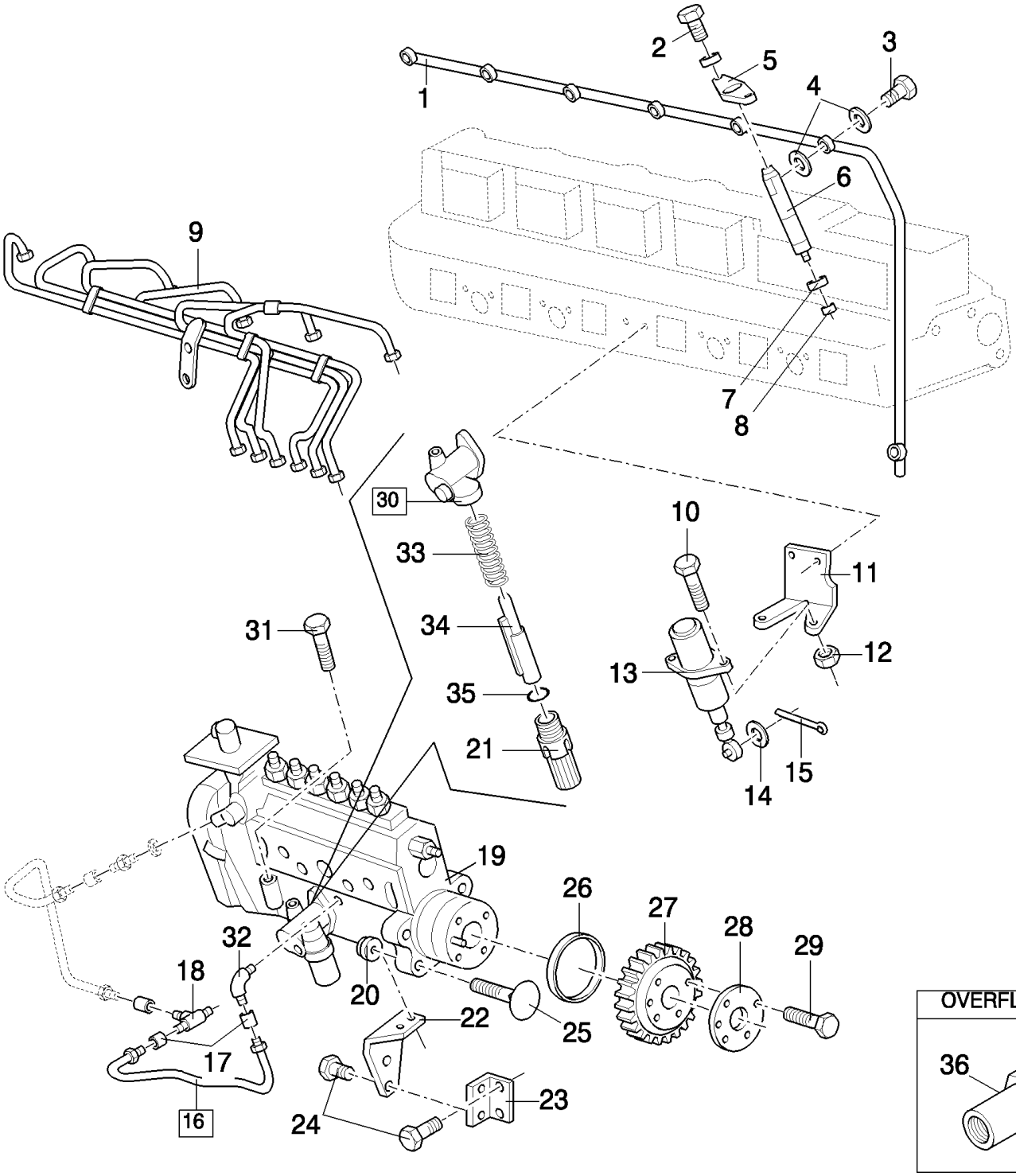

TX68 COMBINE - BASE UNIT

00.214(01) FUEL SYSTEM WITH INJECTION PUMP - FROM --1077001 (NOT FOR TX68PLUS) UNTIL --1245999

ссылка	Номер детали	Кол-во	Описание
1	81879153	1	TUBE,
2	87840522	12	BOLT,
3	87800617	6	SCREW,
4	E8HN9N661AA	12	WASHER,
5	83958141	6	BRACKET,
6	87840446	6	INJECTOR, FUEL SYSTEM,
7	F2NN9F596AA	6	SEAL,
8	81873921	6	WASHER, SEALING,
9	87802318	1	TUBE, RIGID,
10	304646S36	2	BOLT, Hex, 1/4"-20 x 3/4", G5, Full Thd,
11	82850508	1	BRACKET,
12	9626558	2	NUT, LOCK, Flg, 1/4"-20,
13	87801213	1	SOLENOID,
14	17793701	1	WASHER,
15	87840356	1	PIN,
16	F2NN9N870BB	1	TUBE, (17)
17	81873714	2	FERRULE,
18	390904S	1	CONNECTION, 3 WAY,
19	87801589	1	PUMP, FUEL INJECTION,
20	382802S36	1	NUT, LOCK, Flg, 3/8"-16,
21	87800632	1	HOUSING,
22	87840299	1	BRACKET,
23	87840297	1	BRACKET,
24	83925618	4	BOLT, Cap, Reduced, Flg Hd., UBS, 3/8"-16 x 3/4"
25	81876724	4	BOLT, 3/8"-16x1-1/2"
26	F0HN9E583AA	1	SEAL,
27	87802686	1	GEAR,
28	87802687	1	PLATE,
29	43000S36	4	SCREW, 3/8"-16x1-1.25"
30	87802277	1	PUMP, SMALL, (21,33 to 35)
30	84814096	1	PUMP, SMALL, , PRIMER PUMP
31	87840231	2	SCREW, 3/8"-16x3.25
32	F2NN9N970AA	1	CONNECTOR, HYD.,
33	87800635	1	SPRING,
34	87800634	1	FILTER, STRAINER,
35	87800633	1	O-RING,
36	84100351	1	VALVE, CONTROL,

00.215(01) FUEL SYSTEM WITH INJECTION PUMP - FROM --1077001 (NOT FOR TX68PLUS) UNTIL --1245999

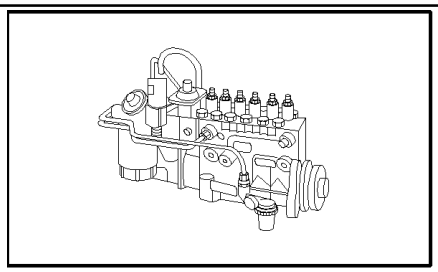

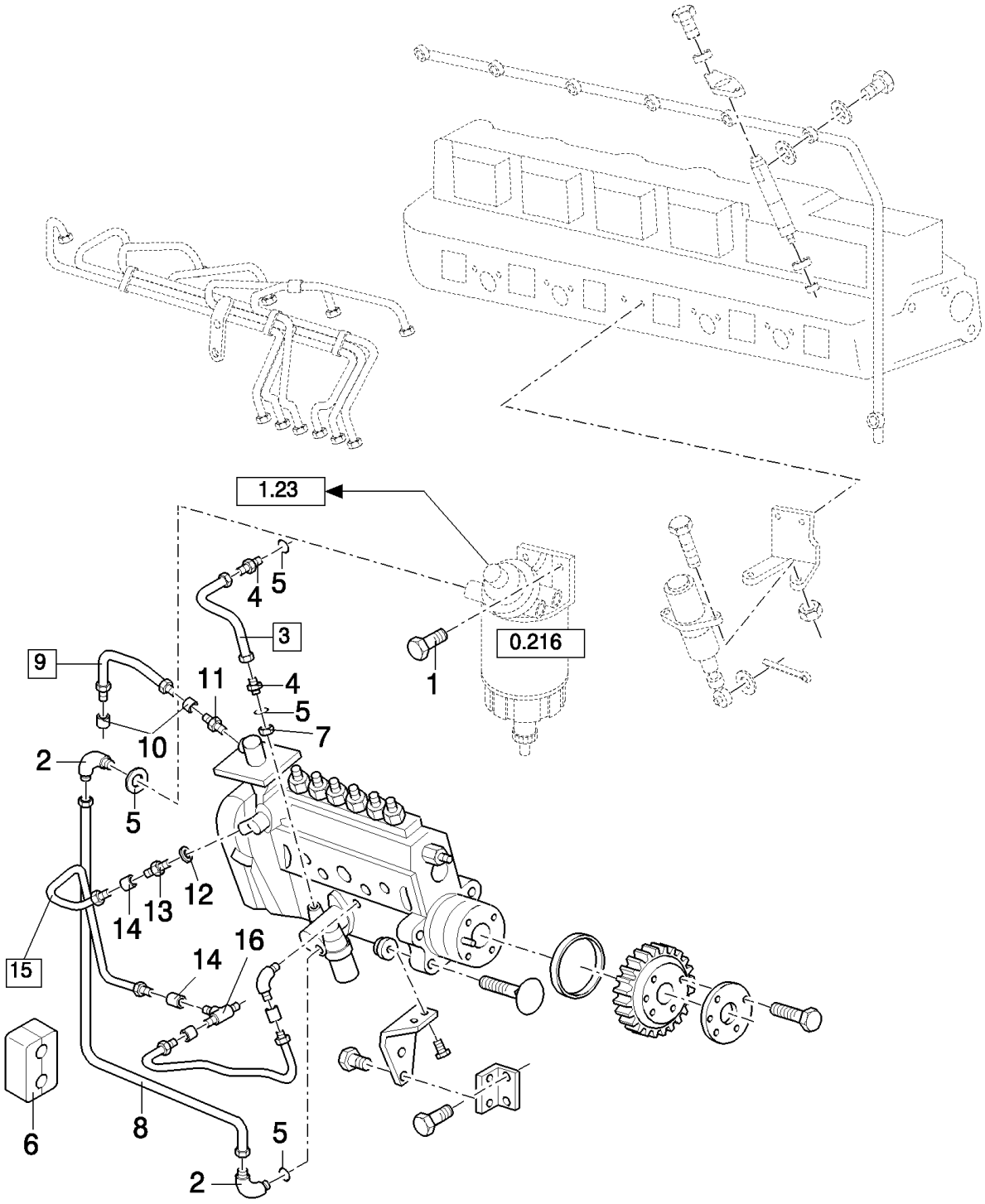

TX68 COMBINE - BASE UNIT

00.215(01) FUEL SYSTEM WITH INJECTION PUMP - FROM --1077001 (NOT FOR TX68PLUS) UNTIL --1245999

ссылка	Номер детали	Кол-во	Описание
1	56540S36	2	BOLT, Cap, Flg Hd., G5, 3/8"-16 x 1"
2	390025S	2	ELBOW,
3	87800700	1	TUBE, (17)
4	83947824	2	FITTING,
5	83904845	4	O-RING,
6	E7NN9C334AB	1	CLAMP,
7	390460S	2	SPACER,
8	87800865	1	TUBE,
9	81876882	1	TUBE, (10)
10	E6HN9N951AA	2	SLEEVE,
11	390275S	2	FITTING,
12	390292S	1	WASHER, .41"
13	390903S	1	CONNECTOR, HYD.,
14	81873714	2	FERRULE,
15	F2NN9R537AC	1	TUBE, (14)
16	390904S	1	CONNECTION, 3 WAY,

00.216(01) FUEL FILTER - FROM --1077001 (NOT FOR TX68PLUS) UNTIL --1245999

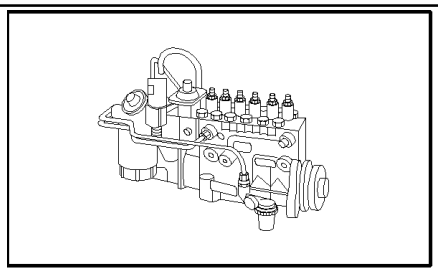

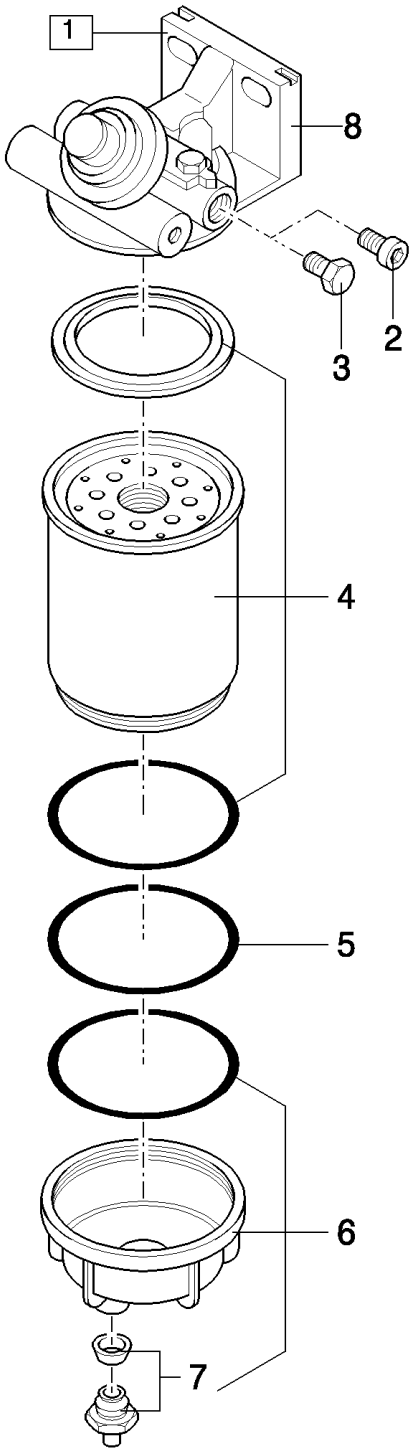

TX68 COMBINE - BASE UNIT

00.216(01) FUEL FILTER - FROM --1077001 (NOT FOR TX68PLUS) UNTIL --1245999

ссылка	Номер детали	Кол-во	Описание
1	87801617	1	FILTER, FUEL, COMPLETE (1 to 8)
2	87840135	1	PLUG,
3	87840134	1	PLUG, 3/8"
4	87840136	1	FILTER, FUEL,
5	87840137	1	O-RING,
6	87840138	1	BOWL,
7	87840139	1	VALVE, CONTROL,
8	87801807	1	SUPPORT,

00.217(01) TURBOCHARGING - FROM --1077001 (NOT FOR TX68PLUS) UNTIL --1245999

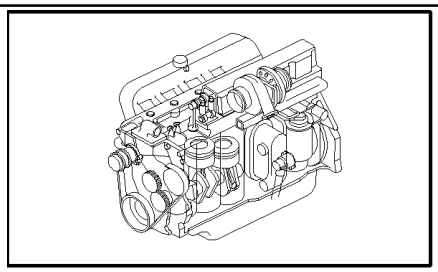

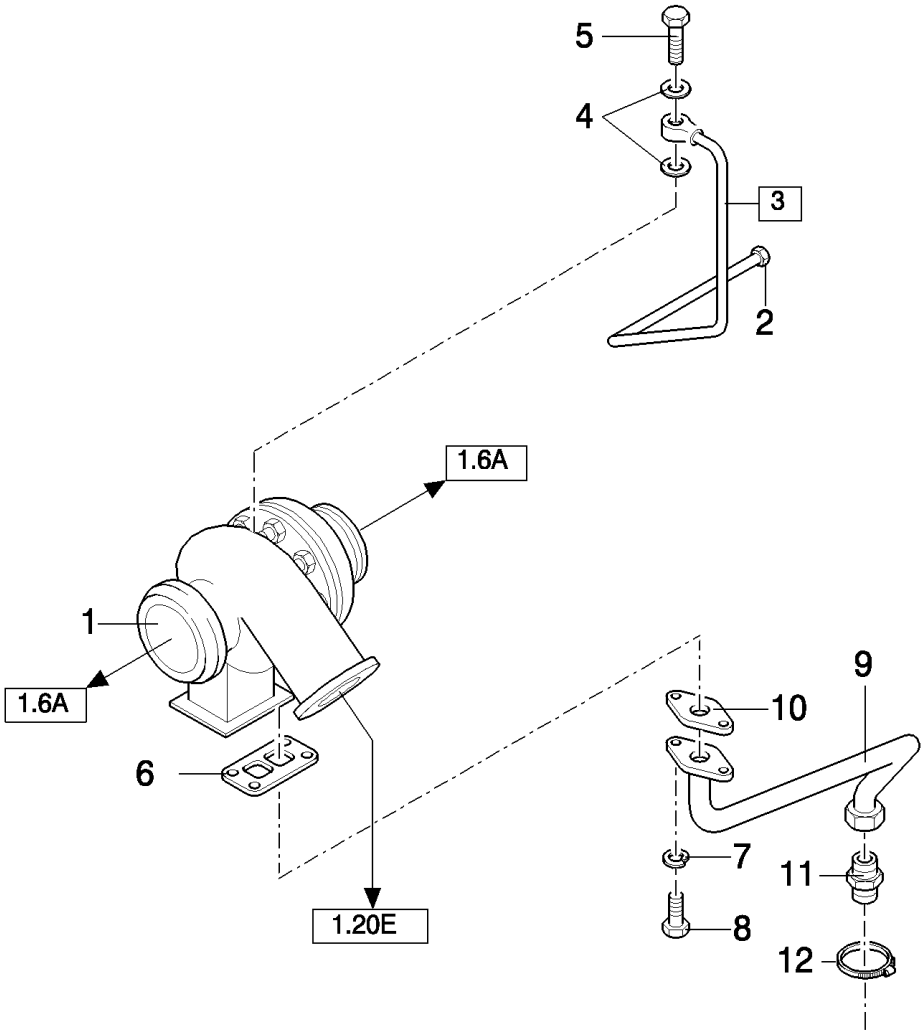

TX68 COMBINE - BASE UNIT

00.217(01) TURBOCHARGING - FROM --1077001 (NOT FOR TX68PLUS) UNTIL --1245999

ссылка	Номер детали	Кол-во	Описание
1	87801634	1	TURBOCHARGER,
2	86417S36	1	SLEEVE,
3	87801702	1	TUBE, (2)
4	87801444	2	WASHER, COPPER,
5	87801023	1	BOLT,
6	83911642	1	GASKET,
7	85700656	2	WASHER, LOCK,
8	82880843	2	SCREW, Cap, HH, M8 x 1.25 x 25
9	87841219	1	TUBE,
10	E4NN6N652AB	1	GASKET,
11	F2NN6A863AA	1	CONNECTOR, HYD.,
12	82012722	2	CLAMP, HOSE, M19-28

00.218(01) OIL PUMP - FROM --1077001 (NOT FOR TX68PLUS) UNTIL --1245999

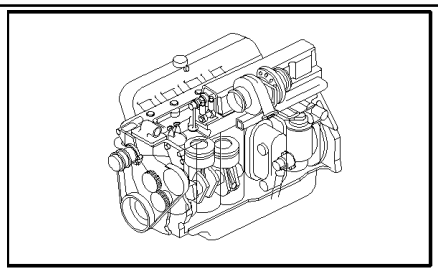

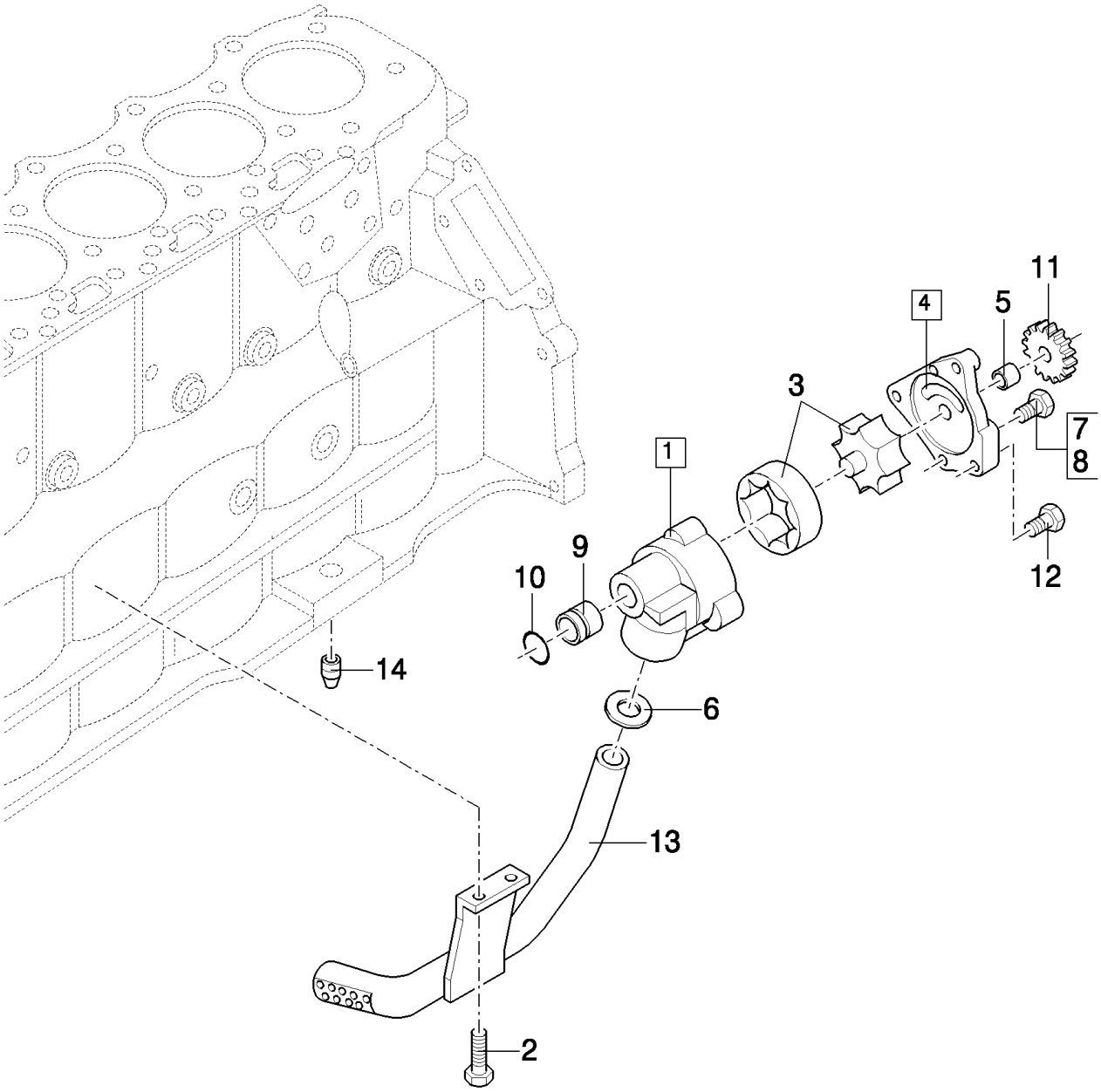

TX68 COMBINE - BASE UNIT

00.218(01) OIL PUMP - FROM --1077001 (NOT FOR TX68PLUS) UNTIL --1245999

ссылка	Номер детали	Кол-во	Описание
1	E9NN6600BB	1	PUMP, ENGINE OIL, (3 to 5,7 to 12)
2	9628510	2	BOLT, Hex Flg, 3/8"-16 x 3/4", G5, Full Thd,
3	F0NN6608CA	1	SHAFT,
4	83999709	1	COVER, (5)
5	F0NN6N774AA	1	BUSHING,
6	F0NN6B652BA	1	O-RING, 1.35"I.D.x.135"
7	F1NN6607AA	1	SCREW, Button Hd., M8 x 1.25
8	F1NN6607BA	3	BOLT, HH, M8 x 1.25
9	83999696	1	SLEEVE,
10	F0NN6B652AA	1	O-RING, .85"I.D.x135"
11	83999693	1	GEAR,
12	87657	3	BOLT, Hex, 5/16"-18 x 1 1/4", G5,
13	F1NN6N705BB	1	TUBE,
14	87800929	1	PLUG, HH, 1/8"-27 x 1.60"

00.219(01) OIL FILTER - FROM --1077001 (NOT FOR TX68PLUS) UNTIL --1245999

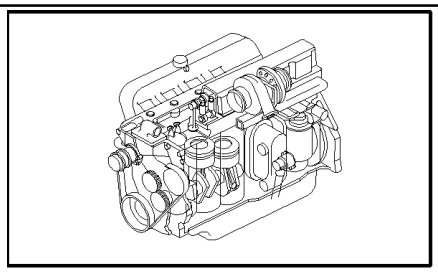

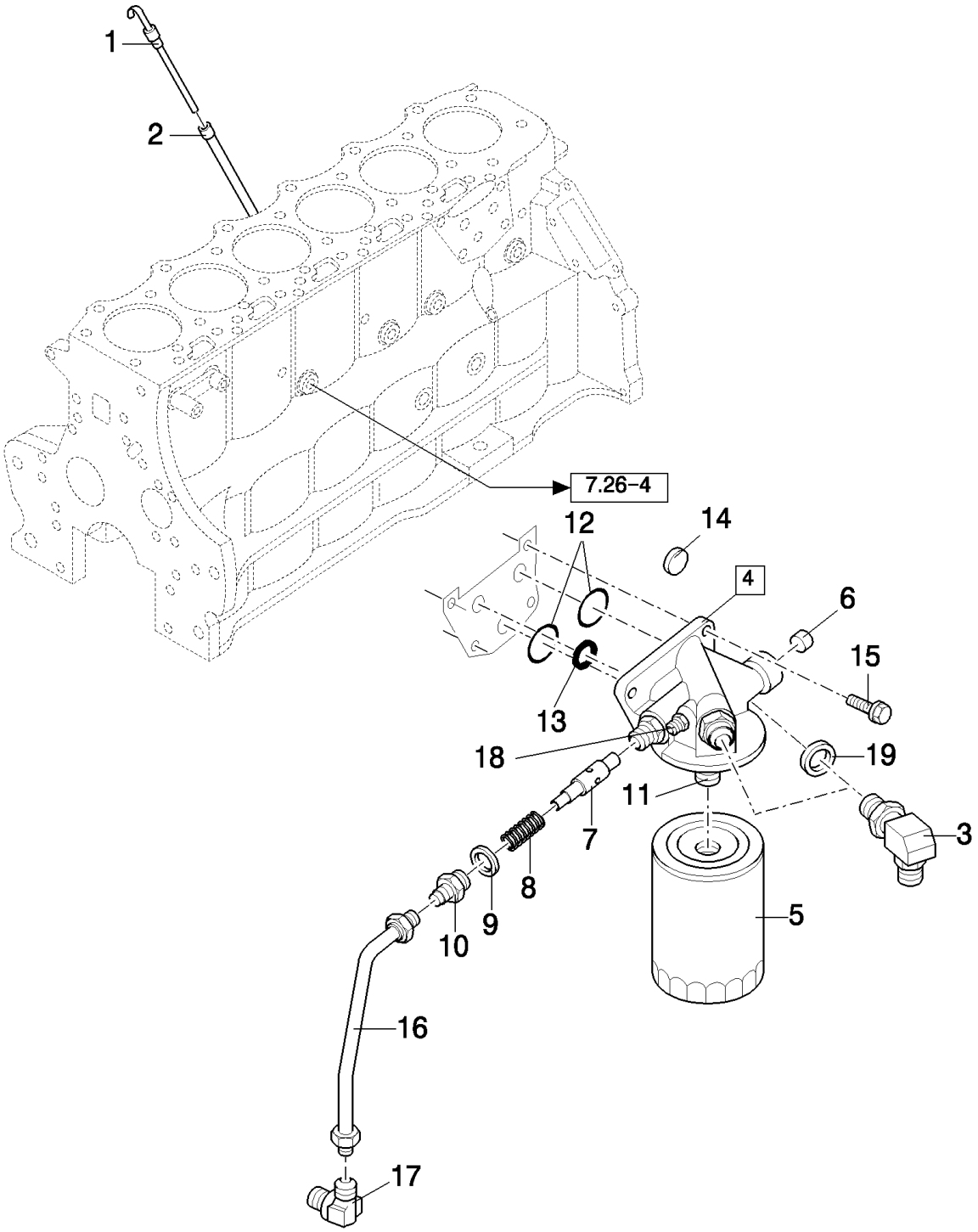

TX68 COMBINE - BASE UNIT

00.219(01) OIL FILTER - FROM --1077001 (NOT FOR TX68PLUS) UNTIL --1245999

ссылка	Номер детали	Кол-во	Описание
1	87801536	1	DIPSTICK,
2	F3NN6784AA	1	TUBE,
3	330344	2	ELBOW, 45є, 1 1/16"-12 x 1 1/16"-12, O-Ring,
4	87801681	1	SUPPORT, (7 to 10,15,18)
5	81879134	1	FILTER, ENGINE OIL,
6	82926938	1	PLUG, Socket Hd., 3/4"-14
7	F2NN6A809AA	1	VALVE, PRESSURE RELIEF,
8	F2NN6670BA	1	SPRING,
9	167266	3	O-RING, 12-1, 90 Duro, .924 ID x .116" Thk,
10	F0NN6N894AA	1	CONNECTOR, HYD.,
11	E5HN6890AA	1	INSERT,
12	14463881	2	O-RING, -220, Cl 7, 1.359" ID x .139" Thk,
13	87051S96	1	O-RING, .85" ID x .135" Thk
14	F0NN6N895AB	1	DISC,
15	56540S36	4	BOLT, Cap, Flg Hd., G5, 3/8"-16 x 1"
16	F0NN6N896AA	1	TUBE,
17	E9NN6N694AA	1	ELBOW, 90°
18	9706918	1	CONNECTOR, HYD., 9/16"-18, 37є x 1/4"-18, NPTF,
19	167266	3	O-RING, 12-1, 90 Duro, .924 ID x .116" Thk,

00.220(01) OIL COOLER - FROM --1077001 (NOT FOR TX68PLUS) UNTIL --1245999

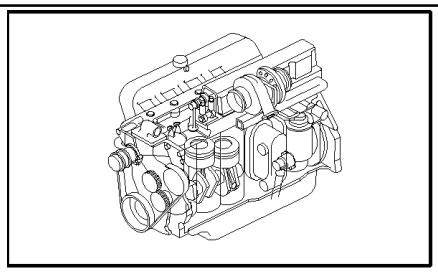

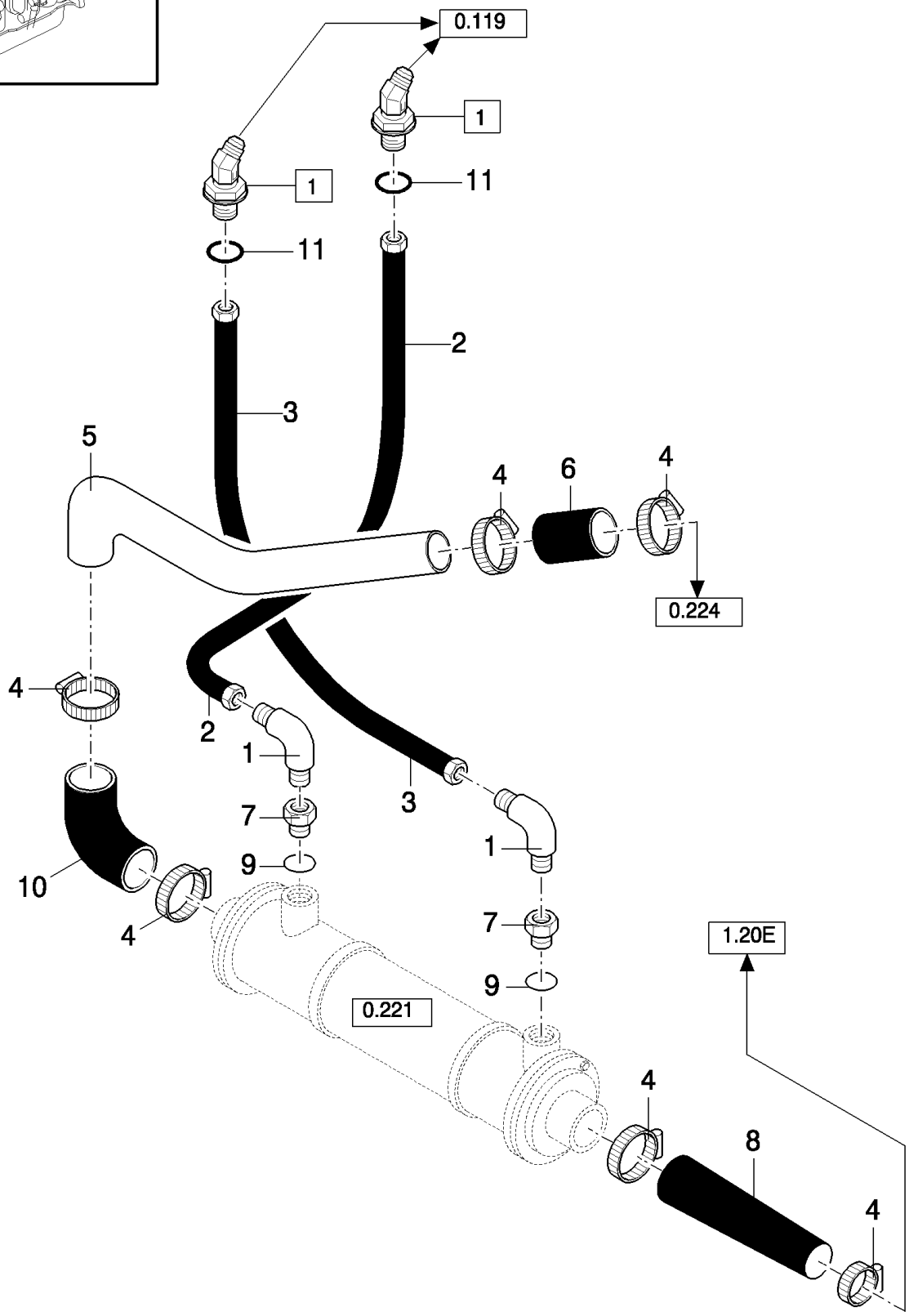

TX68 COMBINE - BASE UNIT

00.220(01) OIL COOLER - FROM --1077001 (NOT FOR TX68PLUS) UNTIL --1245999

ссылка	Номер детали	Кол-во	Описание
1	330344	4	ELBOW, 45є, 1 1/16"-12 x 1 1/16"-12, O-Ring, (11)
2	84015095	1	HOSE, HYDRAULIC,
3	84015094	1	HOSE, HYDRAULIC,
4	556701	5	CLAMP,
5	84017676	1	TUBE, RIGID,
6	84012945	1	HOSE,
7	84015973	2	CONNECTOR, HYD.,
8	84053033	1	HOSE,
9	84022998	2	WASHER,
10	84017675	1	ELBOW, Rubber
11	167266	2	O-RING, 12-1, 90 Duro, .924 ID x .116" Thk,

00.221(01) OIL COOLER - FROM --1077001 (NOT FOR TX68PLUS) UNTIL --1245999

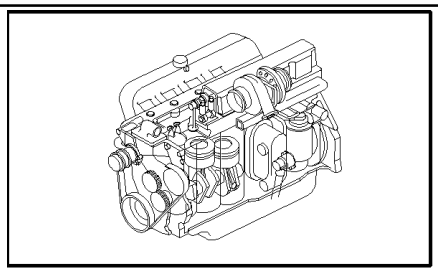

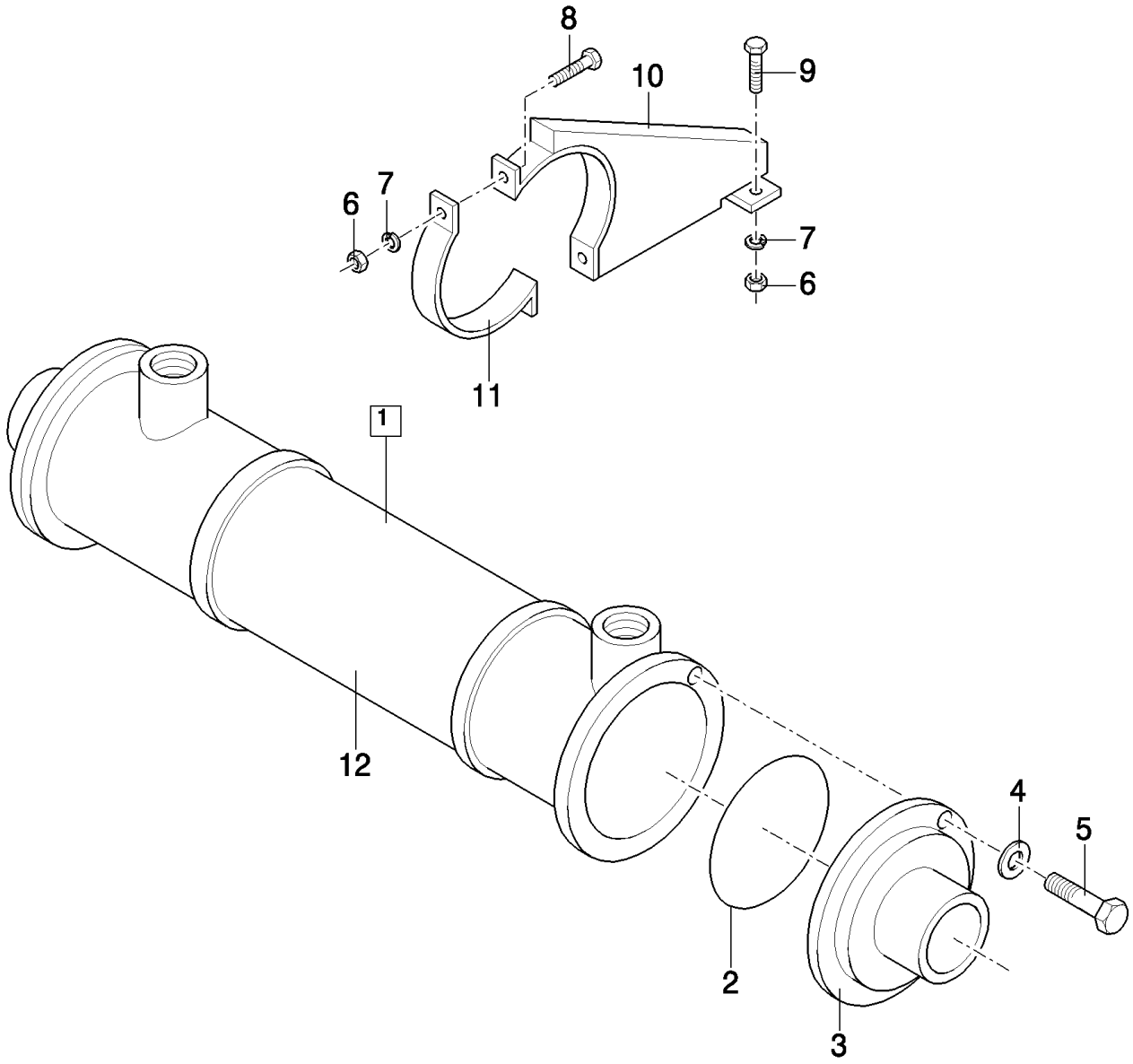

TX68 COMBINE - BASE UNIT

00.221(01) OIL COOLER - FROM --1077001 (NOT FOR TX68PLUS) UNTIL --1245999

ссылка	Номер детали	Кол-во	Описание
1	84017716	1	COOLER, OIL, (2 to 5,12)
2	84022783	2	O-RING,
3	84022786	2	COVER,
4	84022777	2	WASHER,
5	84022779	2	SCREW,
6	100016	8	NUT, M10, Cl 8,
7	140045	8	WASHER, SPRING, Belleville, M10,
8	43138	4	SCREW, Hex, M10 x 20, 8.8, Full Thd,
9	43140	4	BOLT, Hex, M10 x 30, 8.8, Full Thd,
10	84017745	2	SUPPORT,
11	84017743	2	CLAMP,
12	84022787	1	CYLINDER,

00.222(01) OIL LINES - FROM --1077001 (NOT FOR TX68PLUS) UNTIL --1245999

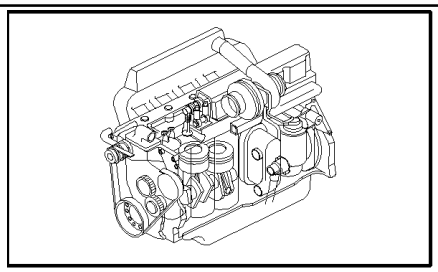

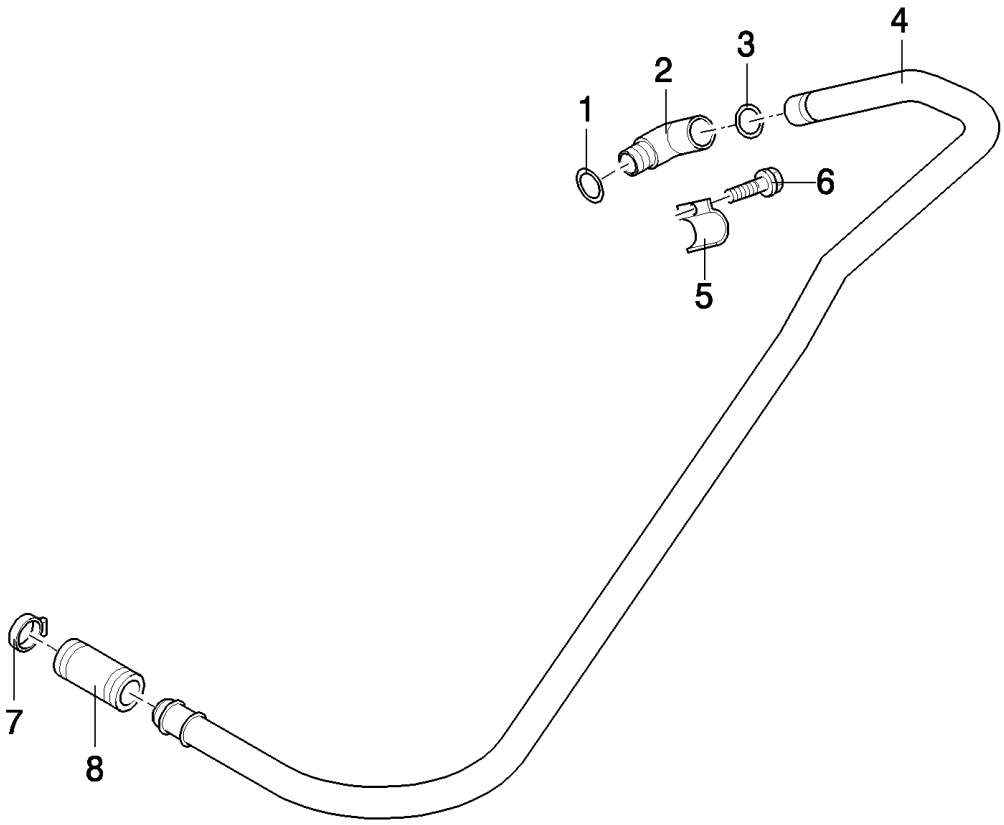

TX68 COMBINE - BASE UNIT

00.222(01) OIL LINES - FROM --1077001 (NOT FOR TX68PLUS) UNTIL --1245999

ссылка	Номер детали	Кол-во	Описание
1	9706747	1	O-RING,
2	81876846	1	ELBOW,
3	27286	1	O-RING,
4	82850571	1	TUBE,
5	F2NN6B751CA	1	BRACKET,
6	56560S36	1	SCREW,
7	388653S	2	CLAMP,
8	87800241	1	HOSE, FLEXIBLE,

00.223(01) WATER PUMP - FROM --1077001 (NOT FOR TX68PLUS) UNTIL --1245999

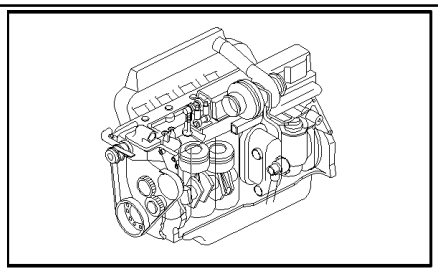

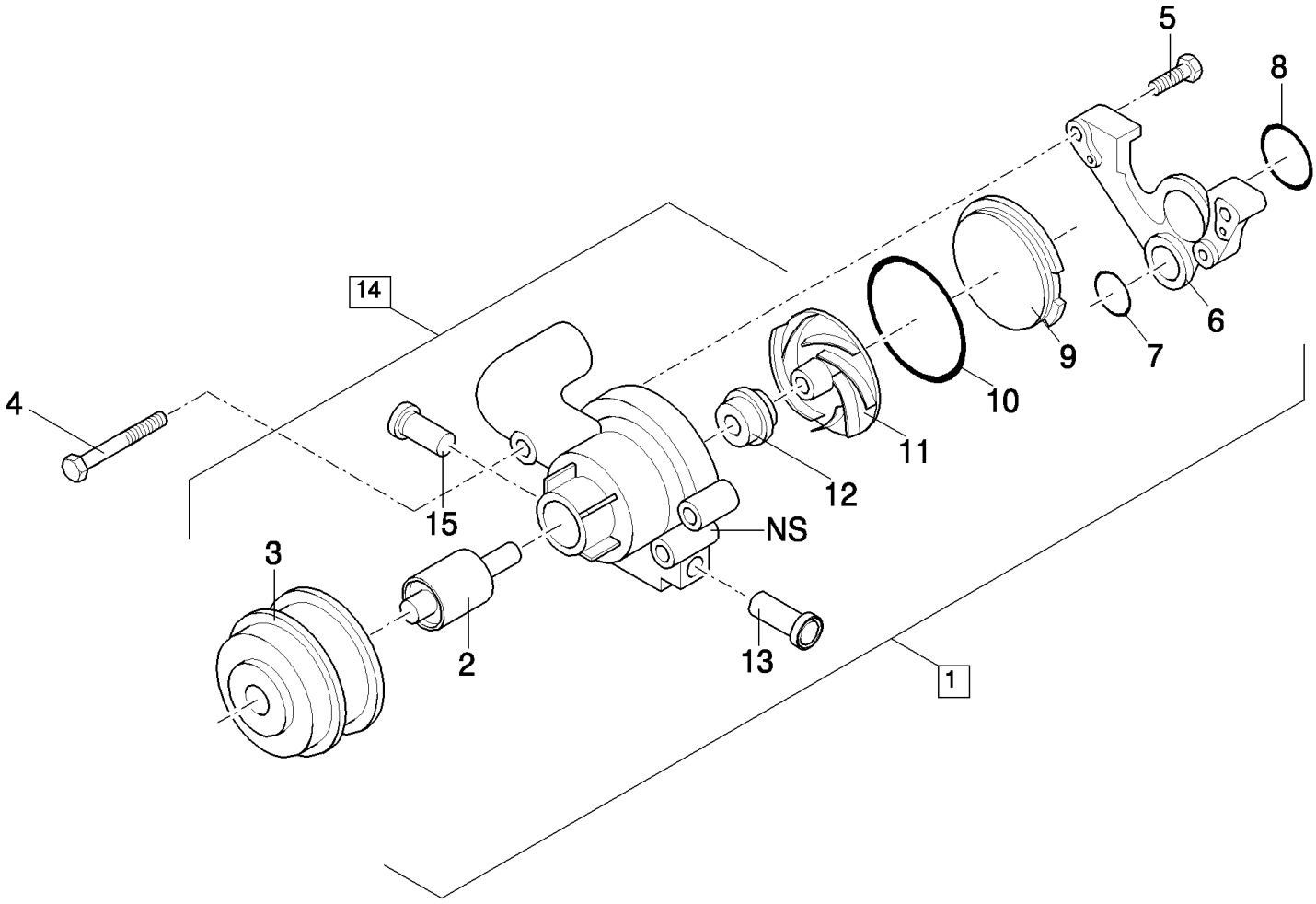

TX68 COMBINE - BASE UNIT

00.223(01) WATER PUMP - FROM --1077001 (NOT FOR TX68PLUS) UNTIL --1245999

ссылка	Номер детали	Кол-во	Описание
1	87800489	1	PUMP, WATER, (2 to 13,15)
2	F2NN8530AA	1	BEARING ASSY,
3	87800481	1	PULLEY,
4	56575S36	3	SCREW, 7/16"-14x5"
5	88146	2	BOLT, Hex, 1/4"-20 x 1", G5,
6	87840300	1	ADAPTER,
7	87065S91	1	O-RING, 1.750" ID x .139" Thk
8	510185	1	O-RING, -228, 70 Duro, 2.234" ID x .139" Thk,
9	F2NN8K552AB	1	PLATE,
10	9845456	1	O-RING, 4-1/4"
11	F2NN8512AA	1	IMPELLER,
12	F1NN8A559EA	1	GASKET,
13	F2NN8555AA	1	TUBE,
14	87800484	1	COVER, (2,3,11 to 13)
15	87840212	1	TUBE,

00.224(01) TEMPERATURE CONTROL - FROM --1077001 (NOT FOR TX68PLUS) UNTIL --1245999

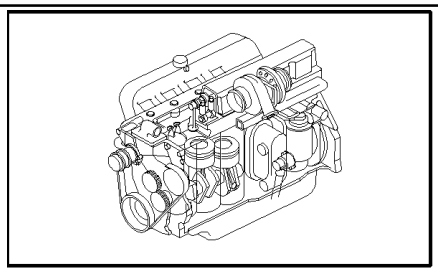

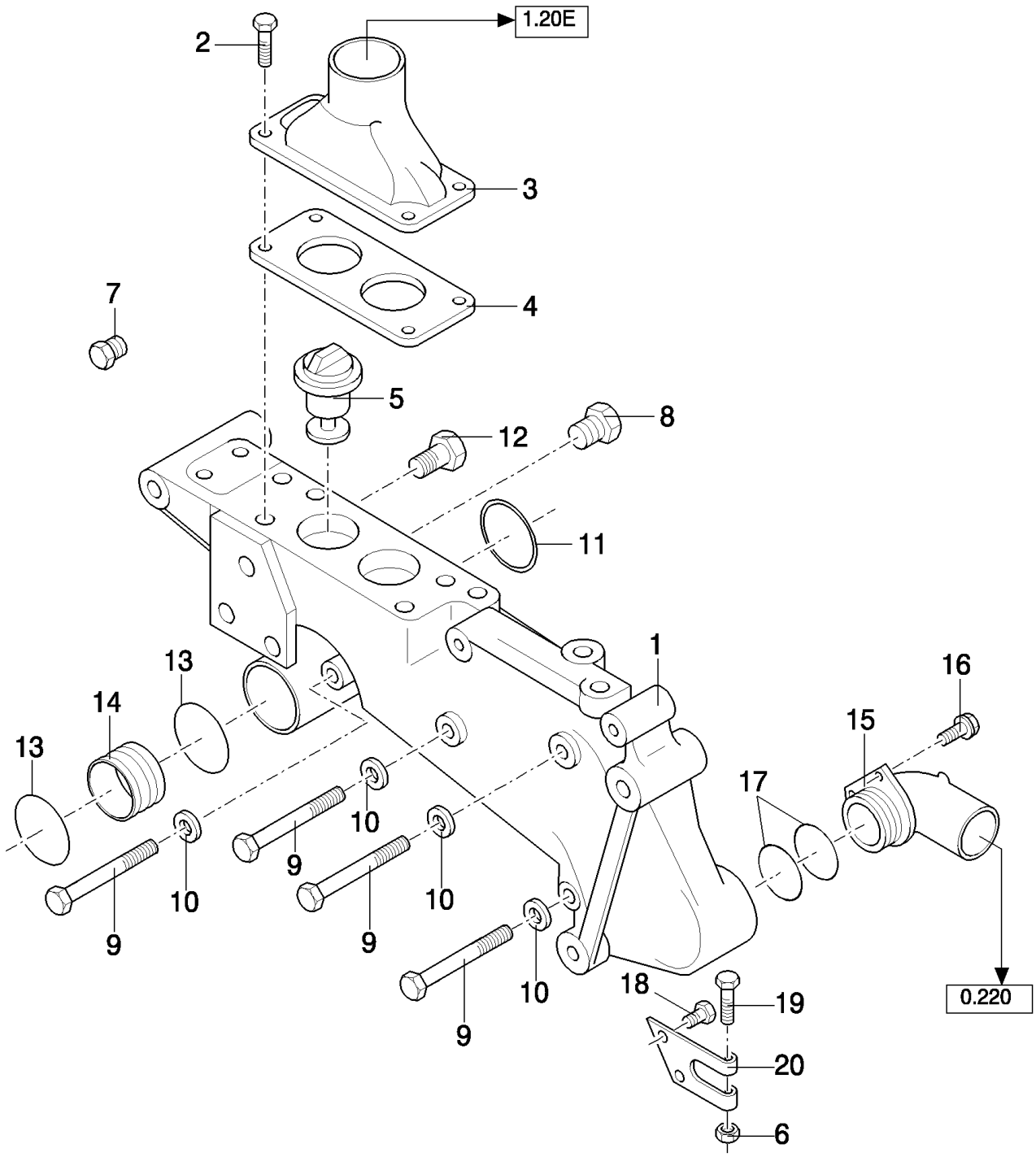

TX68 COMBINE - BASE UNIT

00.224(01) TEMPERATURE CONTROL - FROM --1077001 (NOT FOR TX68PLUS) UNTIL --1245999

ссылка	Номер детали	Кол-во	Описание
1	87840562	1	HOUSING, (22)
2	56521S36	4	SCREW, 5/16"-18x1"
3	81876917	1	HOUSING,
4	D8NN8255AA	1	GASKET,
5	87800842	2	THERMOSTAT,
6	9626558	1	NUT, LOCK, Flg, 1/4"-20,
7	81868411	1	PLUG, 1/4"
7	87654S36	1	PLUG, 3/4"-14x.75
7	V20396	3	PLUG, Cyl. block
8	87652S36	2	PLUG, HH, 3/8"-18
9	56567S36	4	SCREW, 7/16"x2.75
10	81547	4	WASHER, LOCK, 7/16",
11	87140S95	1	O-RING, 2.817" ID x .103" Thk
12	V20396	1	PLUG, 1/2"-14x3/4"
13	510185	2	O-RING, -228, 70 Duro, 2.234" ID x .139" Thk,
14	F3NN8A505AA	1	TUBE,
15	87840592	1	ELBOW,
16	56505S36	2	BOLT,
17	510185	2	O-RING, -228, 70 Duro, 2.234" ID x .139" Thk,
18	83949109	2	BOLT, Cap, Flg Hd, G5, 5/16"-18 x .62"
19	56510S36	1	SCREW,
20	82850568	1	BRACKET,

00.301(01) COMPLETE ENGINE

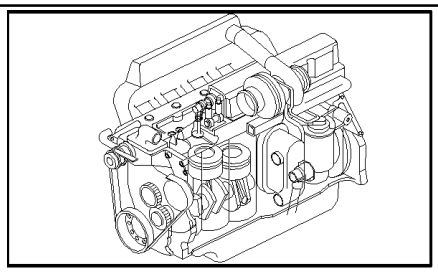

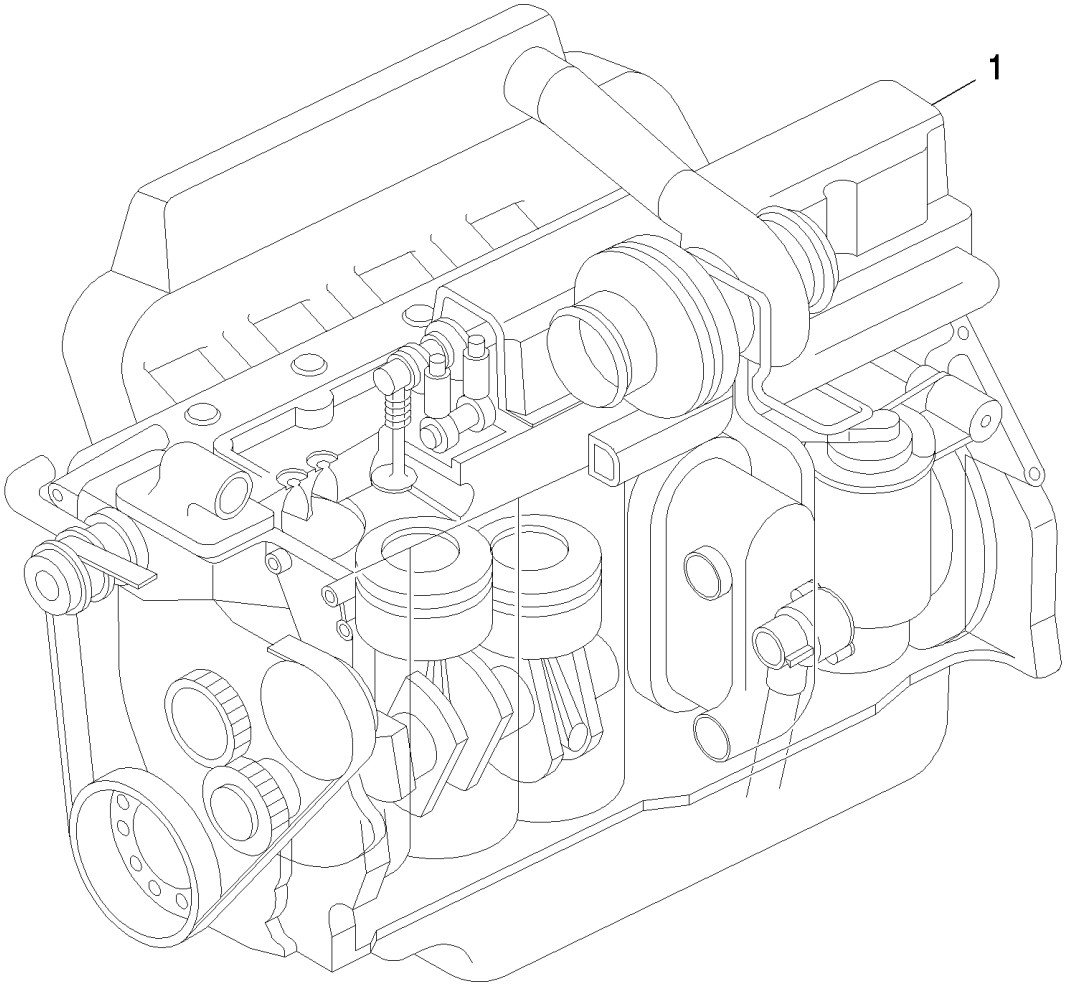

TX68 COMBINE - BASE UNIT

00.301(01) COMPLETE ENGINE

ссылка	Номер детали	Кол-во	Описание
1	87802220	1	ENGINE, TX63, SEE ENGINE MODEL 675 TA/CB
1	87802577	1	ENGINE, TX65, TX66, SEE ENGINE MODEL 675 TA/CA
1	87802628	1	ENGINE, TX68, SEE ENGINE MODEL 675 TA/AB

SECTIONS	**SECTIONS**	**SECCIONES**	**AFSNIT**
SEZIONI	**ABSCHNITTE**	**SECÇÕES**	**SECTIES**

SEC. 1

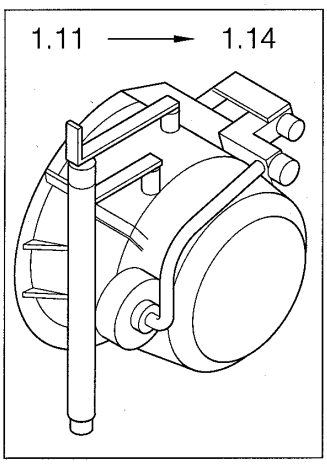

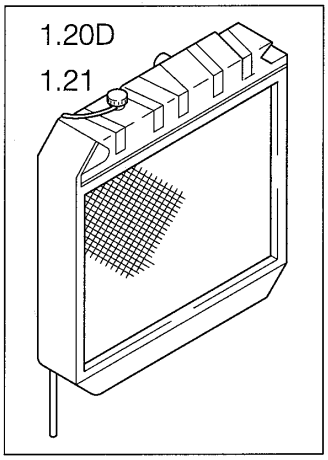

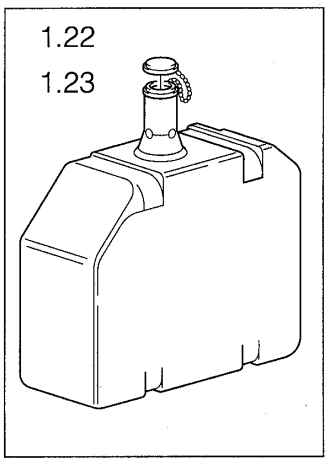

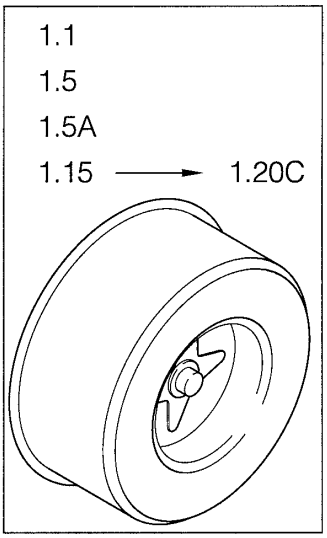

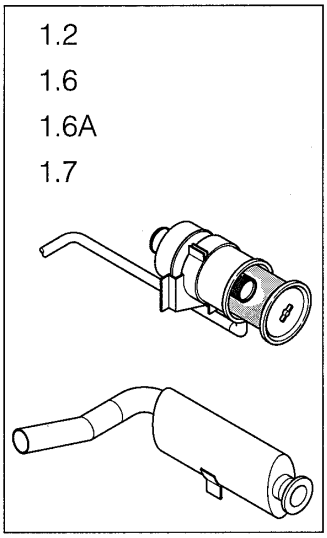

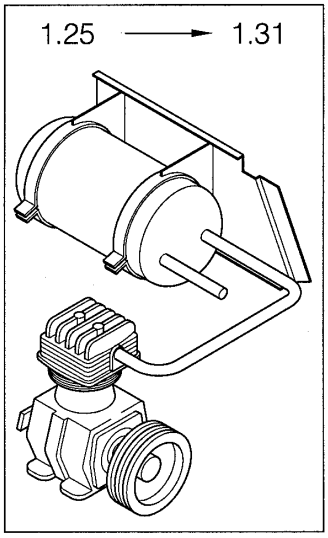

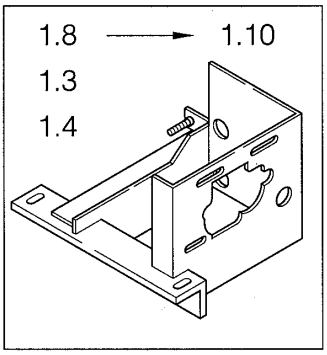

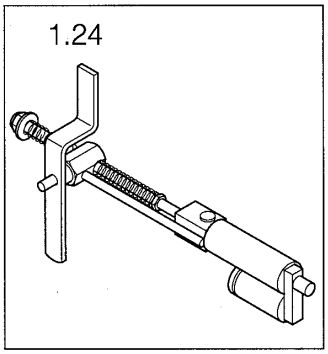

TX68 COMBINE - BASE UNIT

01.00(01) SECTION LIST 1

ссылка	Номер детали	Кол-во	Описание

01.01(01) ENGINE ACCESSORIES - UNTIL --1076999 (NOT FOR TX68PLUS)

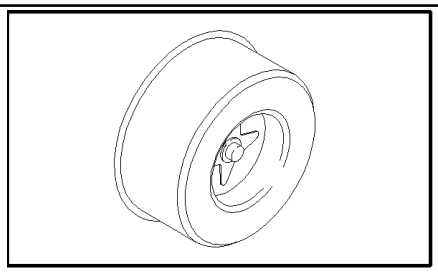

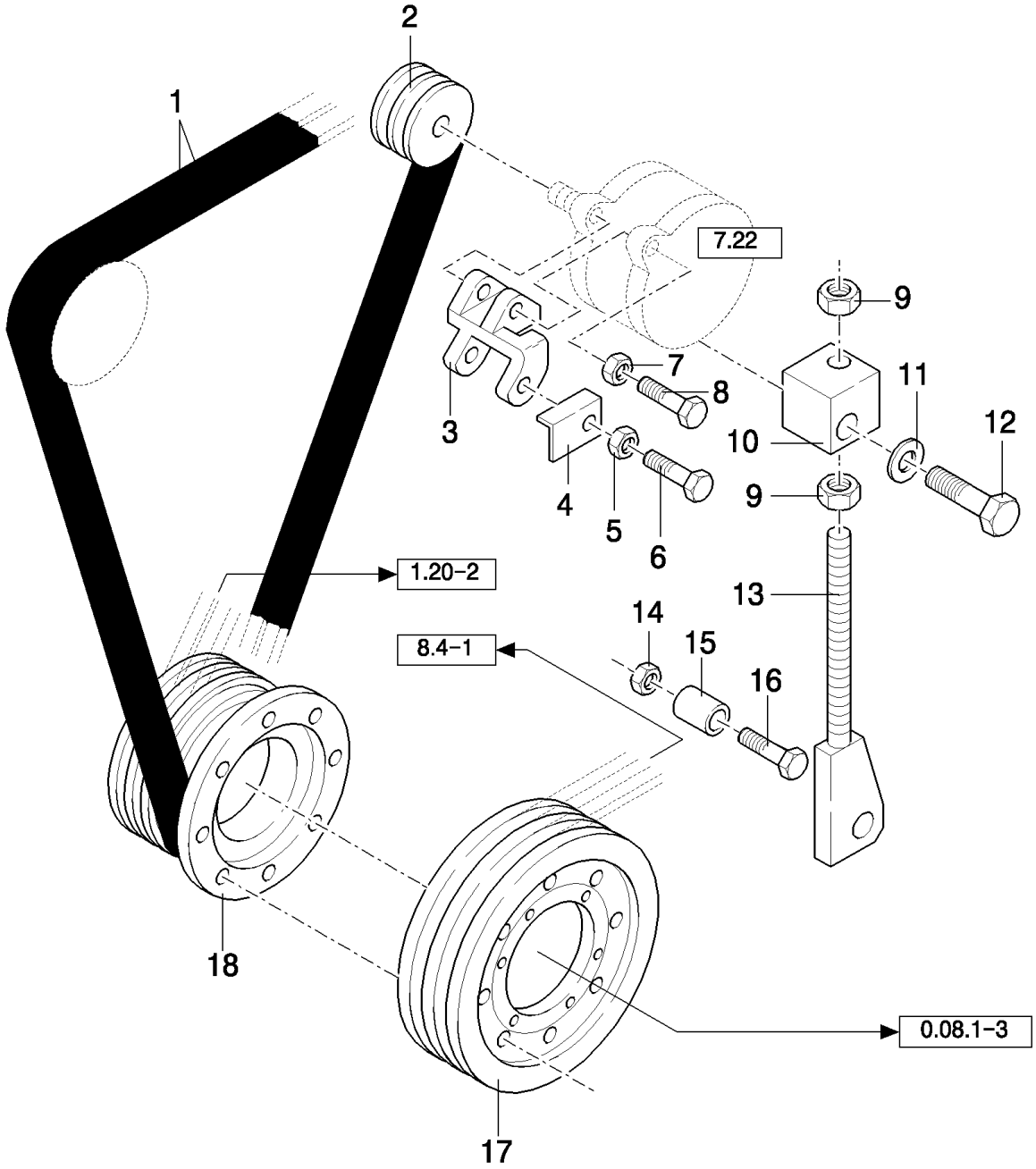

TX68 COMBINE - BASE UNIT

01.01(01) ENGINE ACCESSORIES - UNTIL --1076999 (NOT FOR TX68PLUS)

ссылка	Номер детали	Кол-во	Описание
1	84007307	1	BELT, TRANSMISSION, (SET OF 2)
2	9850283	1	PULLEY,
3	84068775	1	SUPPORT,
4	84014004	1	ANGLE, , -C6410
5	100037	1	NUT, M10 x 1.5, Cl 8,
6	331168	1	BOLT, Hex, M10 x 140, 8.8,
7	88871	1	NUT, LOCK, 1/2"-13, GC,
8	86000020	1	BOLT, Hex, 1/2"-13 x 6", G5,
9	337475	2	NUT, M12, Cl 10,
10	84000639	1	SLEEVE, ADJUSTING,
11	80679	1	WASHER, LOCK, 1/2",
12	84007939	1	SCREW,
13	9850246	1	ROD, ADJUSTMENT,
14	100038	1	NUT, M12 x 1.75, Cl 8,
15	84015131	1	BUSHING,
16	43158	1	BOLT, Hex, M12 x 80, 8.8,
17	9850305	1	PULLEY,
18	9850308	1	PULLEY,

01.02(01) EXHAUST AND AIR FILTER - UNTIL --1076999 (NOT FOR TX68PLUS)

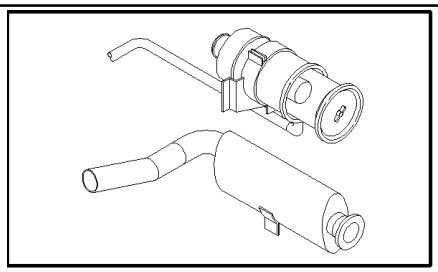

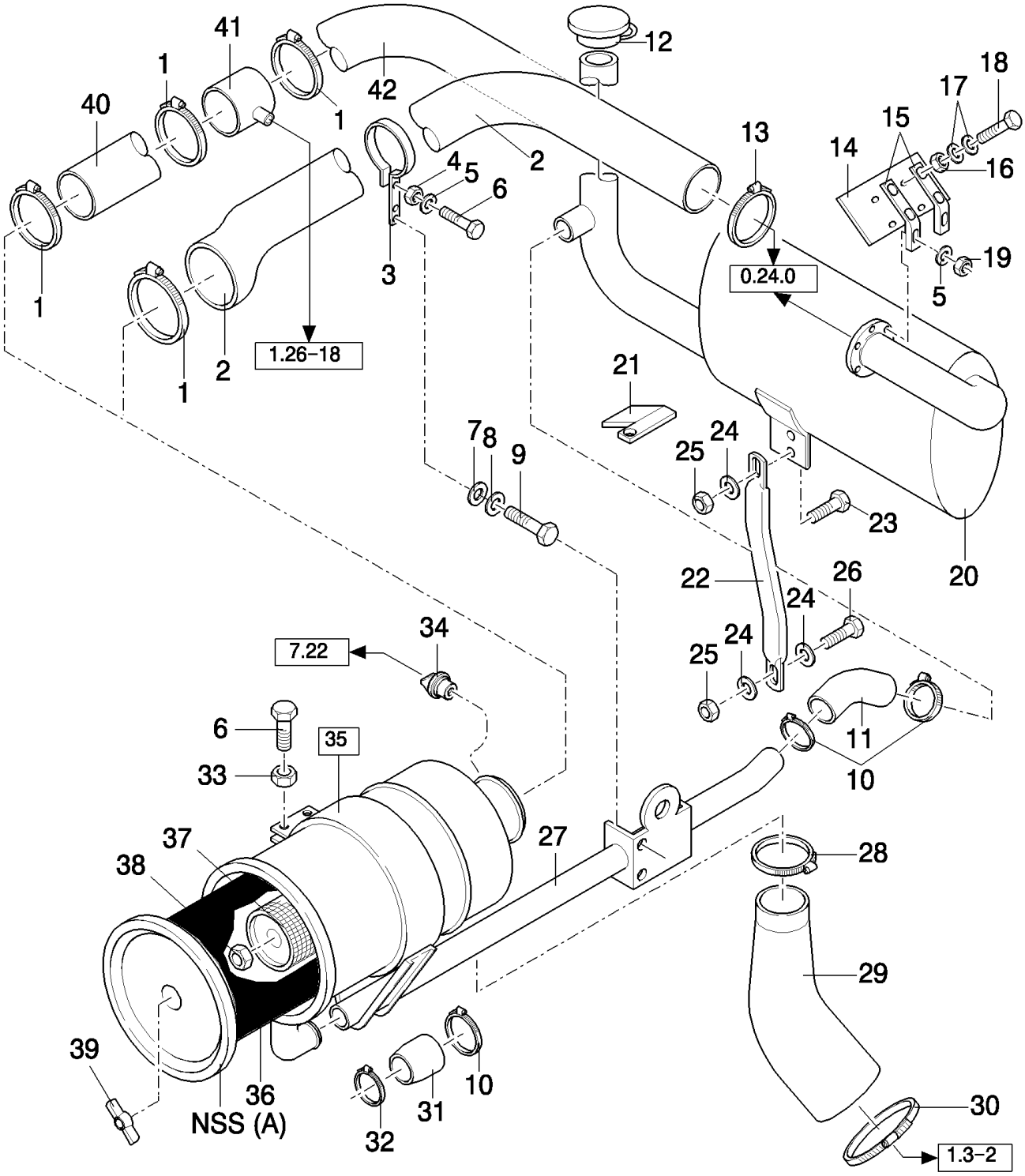

TX68 COMBINE - BASE UNIT

01.02(01) EXHAUST AND AIR FILTER - UNTIL --1076999 (NOT FOR TX68PLUS)

ссылка	Номер детали	Кол-во	Описание
1	84012068	AR	CLAMP,
2	9850249	1	HOSE,
3	84022150	1	CLAMP,
4	86629542	1	NUT, LOCK, M8 x 1.25, Cl 8,
5	322358	7	WASHER, SPRING, Belleville, M8,
6	43129	3	BOLT, Hex, M8 x 40, 8.8,
7	419176	1	RING,
7	140069	AR	WASHER,
8	140047	AR	WASHER, LOCK,
9	9516470	2	BOLT, Hex, M14 x 1.5 x 30, 8.8, Full Thd,
10	556701	2	CLAMP,
11	9850605	1	ELBOW,
12	9850218	1	COVER,
13	64706	1	CLAMP,
13	84022188	1	CLAMP,
14	84004818	1	PLATE, COVER,
15	84004817	2	SUPPORT,
16	15896221	4	NUT, M6, Cl 10,
17	412649	8	WASHER, SPRING, Belleville, M6,
18	80120099	4	BOLT, Hex, M6 x 16, 8.8,
19	86629542	6	NUT, LOCK, M8 x 1.25, Cl 8,
20	9850247	1	MUFFLER,
21	9814278	1	PLATE, COVER,
22	9850356	1	SUPPORT,
23	43138	1	SCREW, Hex, M10 x 20, 8.8, Full Thd,
24	140045	3	WASHER, SPRING, Belleville, M10,
25	100016	2	NUT, M10, Cl 8,
26	43140	1	BOLT, Hex, M10 x 30, 8.8, Full Thd,
27	9850354	1	SUPPORT,
28	84012068	1	CLAMP,
29	9850248	1	ELBOW,
30	9838327	1	CLAMP,
31	9850606	1	HOSE, FLEXIBLE,
32	360747	1	CLAMP,
33	86629542	2	NUT, LOCK, M8 x 1.25, Cl 8,
34	375644	1	SENDER UNIT,
35	84043441	1	FILTER, AIR, (36 to 39,A)
36	748274	1	FILTER, AIR,
37	9811231	1	FILTER, ELEMENT,
38	12164121	1	NUT, M16 x 1.5, Cl 10,
39	9817591	1	NUT,
40	84036909	1	ELBOW, , FOR BLOW-OFF SYSTEM ONLY
41	84036910	1	TUBE, RIGID, , FOR BLOW-OFF SYSTEM ONLY
42	84036908	1	ELBOW, , FOR BLOW-OFF SYSTEM ONLY

01.02A(01) EXHAUST AND AIR FILTER - TX68PLUS

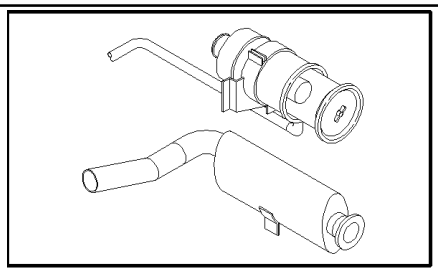

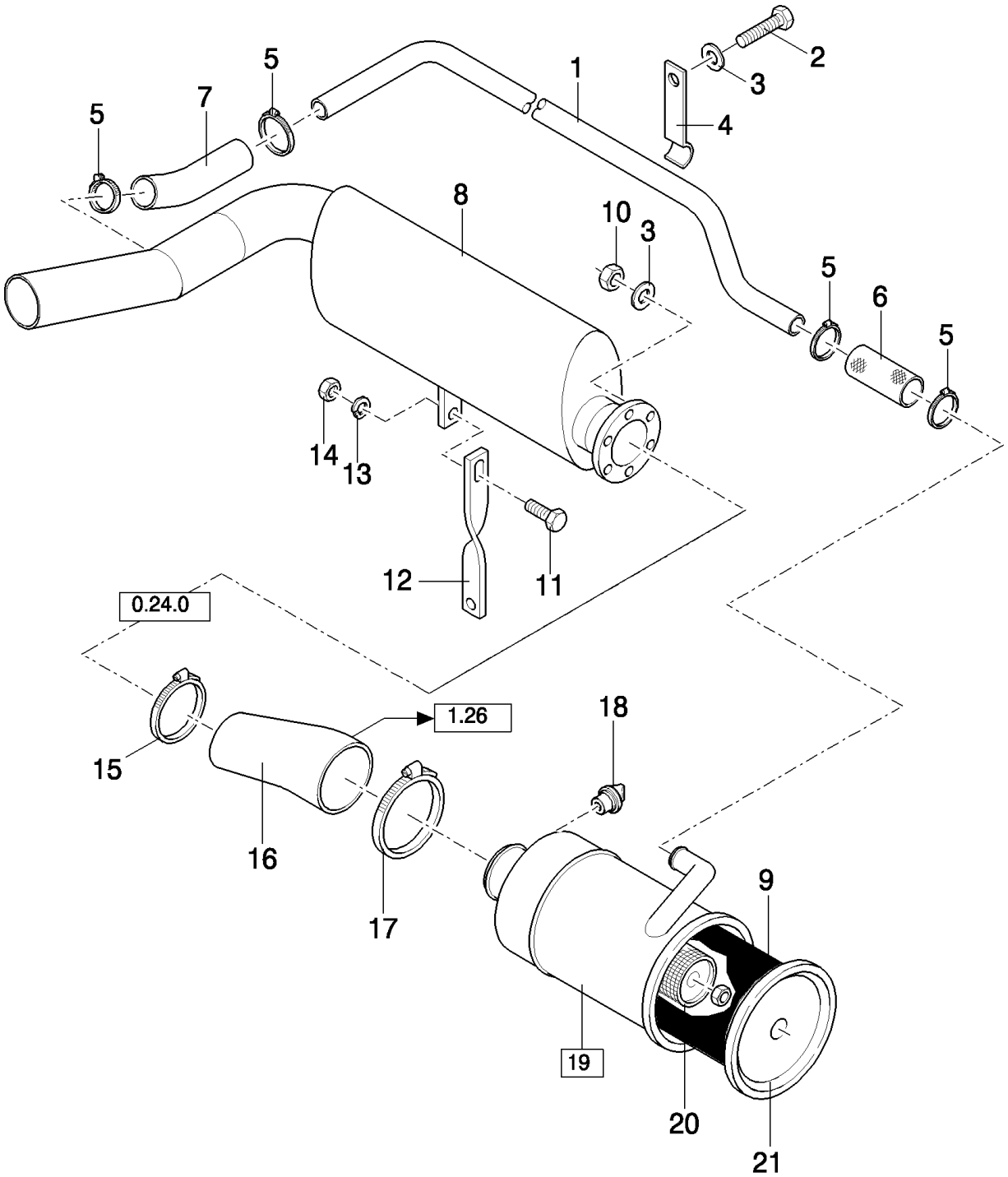

TX68 COMBINE - BASE UNIT

01.02A(01) EXHAUST AND AIR FILTER - TX68PLUS

ссылка	Номер детали	Кол-во	Описание
1	84039169	1	TUBE,
2	43127	2	BOLT, Hex, M8 x 25, 8.8,
3	322358	2	WASHER, SPRING, Belleville, M8,
4	84012479	1	SUPPORT,
5	360747	2	CLAMP,
6	84011850	1	HOSE,
7	84042898	1	HOSE,
8	84011763	1	MUFFLER,
9	84032107	1	FILTER, ELEMENT,
10	84041352	6	NUT, LOCK, M8 x 1.25, Cl8.8, M8 (Cu)
11	43138	2	SCREW, Hex, M10 x 20, 8.8, Full Thd,
12	84041675	1	SUPPORT,
13	140045	2	WASHER, SPRING, Belleville, M10,
14	100016	2	NUT, M10, Cl 8,
15	64706	1	CLAMP,
16	84042763	1	ELBOW, , -C1123
16	84038070	1	ELBOW,
17	84012068	1	CLAMP,
18	84043184	1	SENDER UNIT,
19	84031481	1	FILTER, AIR, (9,20,21)
20	84031482	1	FILTER, ELEMENT,
21	84074172	1	COVER,

01.03(01) ENGINE SUPPORTS - UNTIL --1076999 (NOT FOR TX68PLUS)

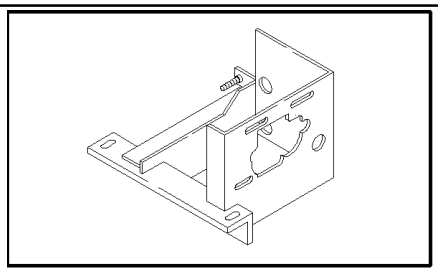

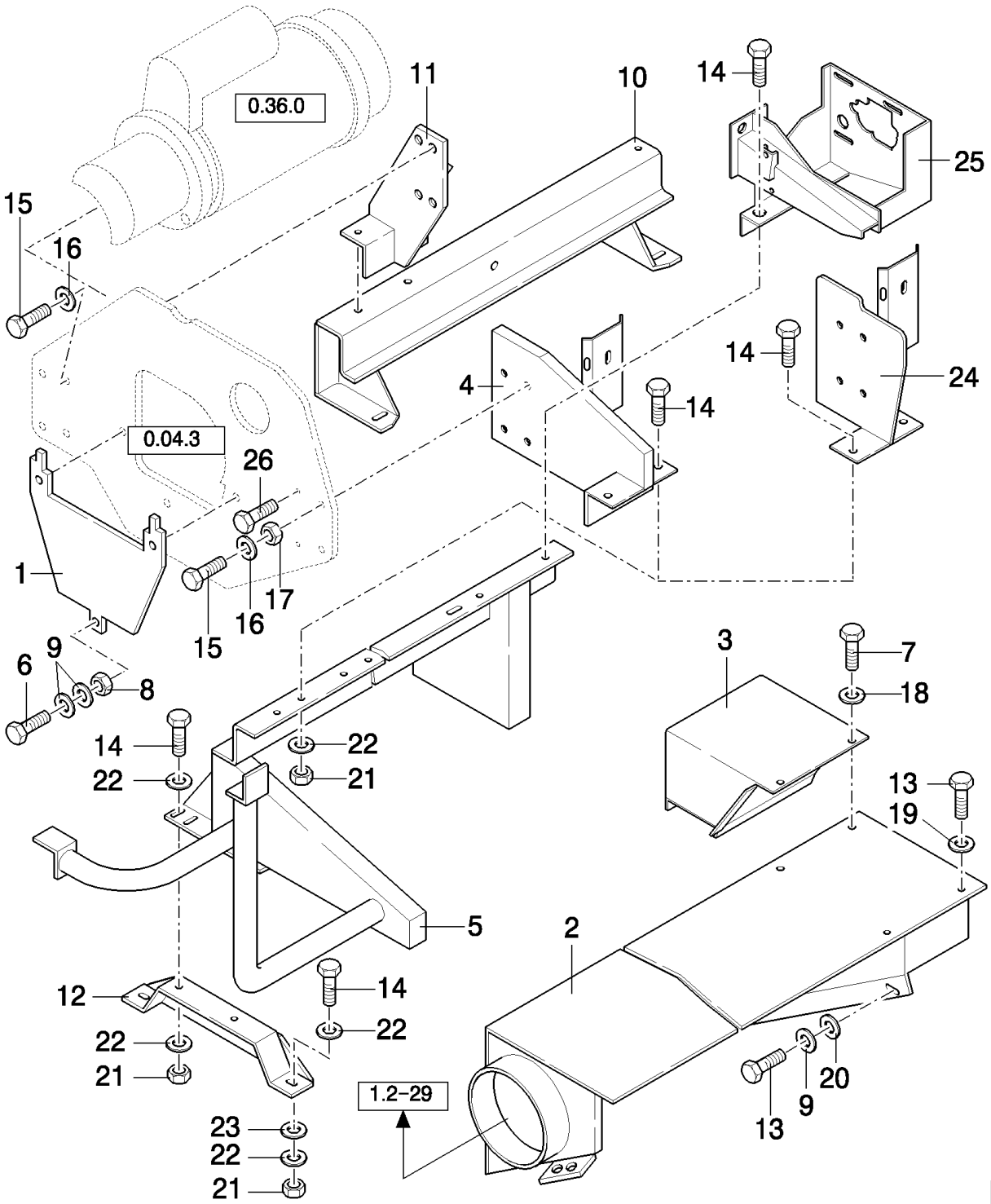

TX68 COMBINE - BASE UNIT

01.03(01) ENGINE SUPPORTS - UNTIL --1076999 (NOT FOR TX68PLUS)

ссылка	Номер детали	Кол-во	Описание
1	9850556	1	PLATE, , NOT FOR TX68PLUS
2	9850535	1	COVER, , NOT FOR TX68PLUS
3	9833974	1	COVER, , NOT FOR TX68PLUS
4	9838767	1	SUPPORT, Cover, NOT FOR TX68PLUS
5	9839642	1	SUPPORT, , NOT FOR TX68PLUS
5	84017559	1	SUPPORT, , FOR TX68PLUS ONLY
6	120100	3	BOLT, Hex, M6 x 20, 8.8,
7	120104	2	SCREW, Hex, M8 x 20, 8.8,
8	15896221	3	NUT, M6, Cl 10,
9	322357	8	WASHER, SPRING, Belleville, M6,
10	9850519	1	SUPPORT, , NOT FOR TX68PLUS
10	84026507	1	SUPPORT, , FOR TX68PLUS ONLY
11	9838763	1	SUPPORT,
12	9500043	1	SUPPORT, , NOT FOR TX68PLUS
13	80120099	7	BOLT, Hex, M6 x 16, 8.8,
14	43140	8	BOLT, Hex, M10 x 30, 8.8, Full Thd,
15	9706687	4	SCREW, Hex, M12 x 30, 8.8,
16	140046	4	WASHER, Belleville, M12,
17	337475	3	NUT, M12, Cl 10,
18	322358	2	WASHER, SPRING, Belleville, M8,
19	412649	5	WASHER, SPRING, Belleville, M6,
20	140040	3	WASHER, M6 x 22 x 2,
21	100016	8	NUT, M10, Cl 8,
22	140045	20	WASHER, SPRING, Belleville, M10,
23	332909	4	WASHER,
24	84037736	1	SUPPORT, , FOR TX68PLUS ONLY
25	84037695	1	SUPPORT, , FOR TX68PLUS ONLY
26	9513759	1	PLUG, , FOR TX68PLUS ONLY

01.04(01) ENGINE SUPPORTS - UNTIL --1076999 (NOT FOR TX68PLUS)

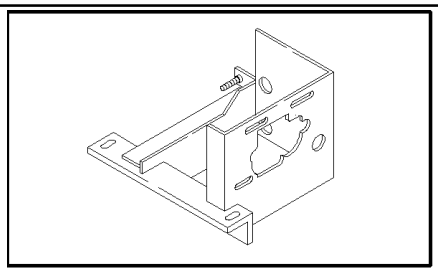

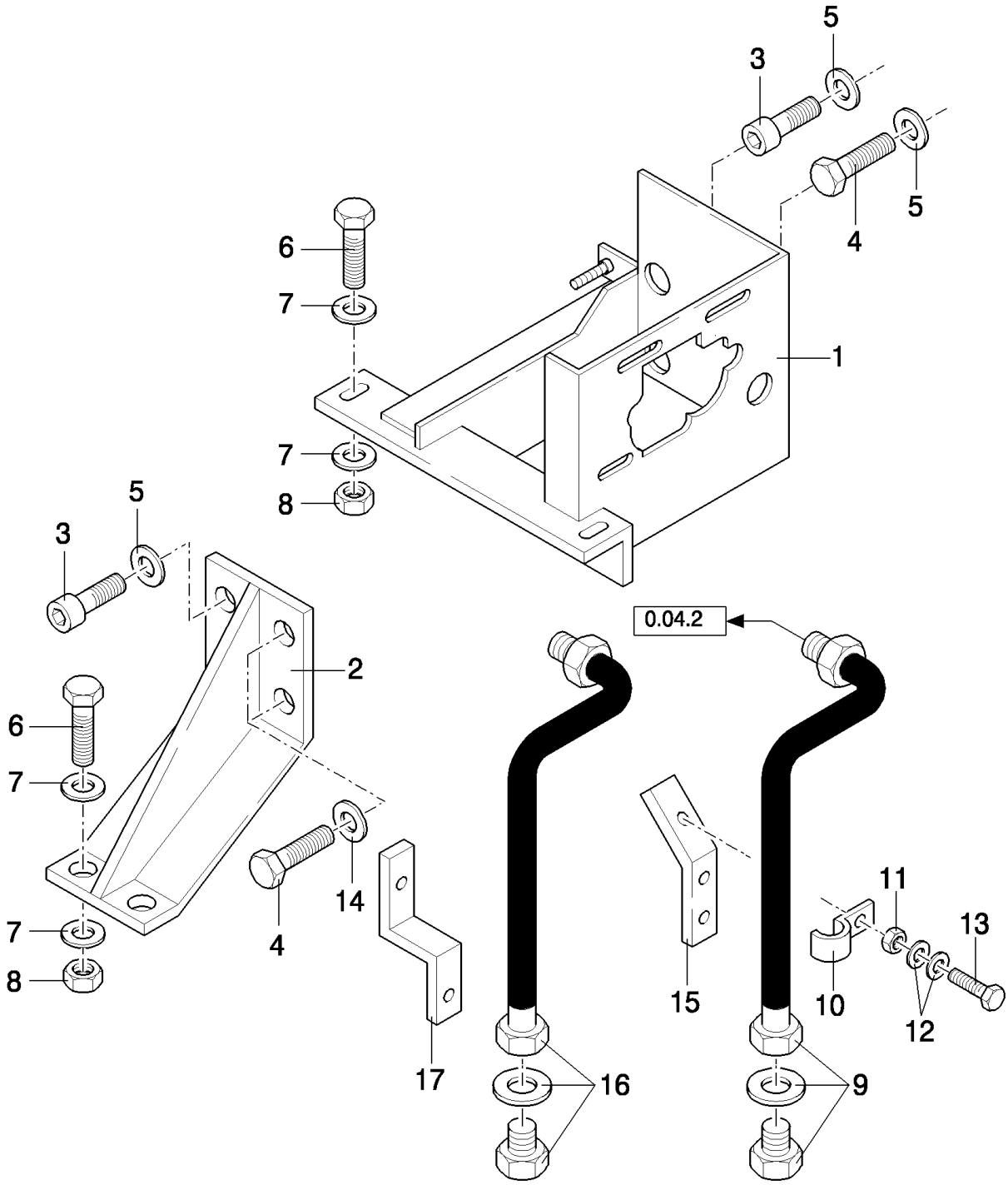

TX68 COMBINE - BASE UNIT

01.04(01) ENGINE SUPPORTS - UNTIL --1076999 (NOT FOR TX68PLUS)

ссылка	Номер детали	Кол-во	Описание
1	9838747	1	SUPPORT, , NOT FOR TX68PLUS
2	9838760	1	SUPPORT, , NOT FOR TX68PLUS
3	84004041	2	SCREW, Hex Flat Hd, M14 x 30, 8.8, , NOT FOR TX68PLUS
4	86509597	6	BOLT, Hex, M14 x 30, 8.8, Full Thd, , NOT FOR TX68PLUS
5	140047	3	WASHER, LOCK, , NOT FOR TX68PLUS
6	43140	6	BOLT, Hex, M10 x 30, 8.8, Full Thd, , NOT FOR TX68PLUS
7	140045	12	WASHER, SPRING, Belleville, M10, , NOT FOR TX68PLUS
8	100016	6	NUT, M10, Cl 8, , NOT FOR TX68PLUS
9	9850922	1	HOSE, FLEXIBLE,
10	418407	4	CLAMP,
11	9706690	4	NUT, M8, Cl 8,
12	322358	8	WASHER, SPRING, Belleville, M8,
13	120104	4	SCREW, Hex, M8 x 20, 8.8,
14	140030	2	WASHER, LOCK, M14,
15	84019206	1	SUPPORT,
16	84053084	1	HOSE, FLEXIBLE,
17	84053448	1	BRACKET,

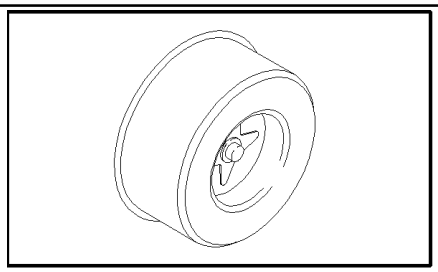

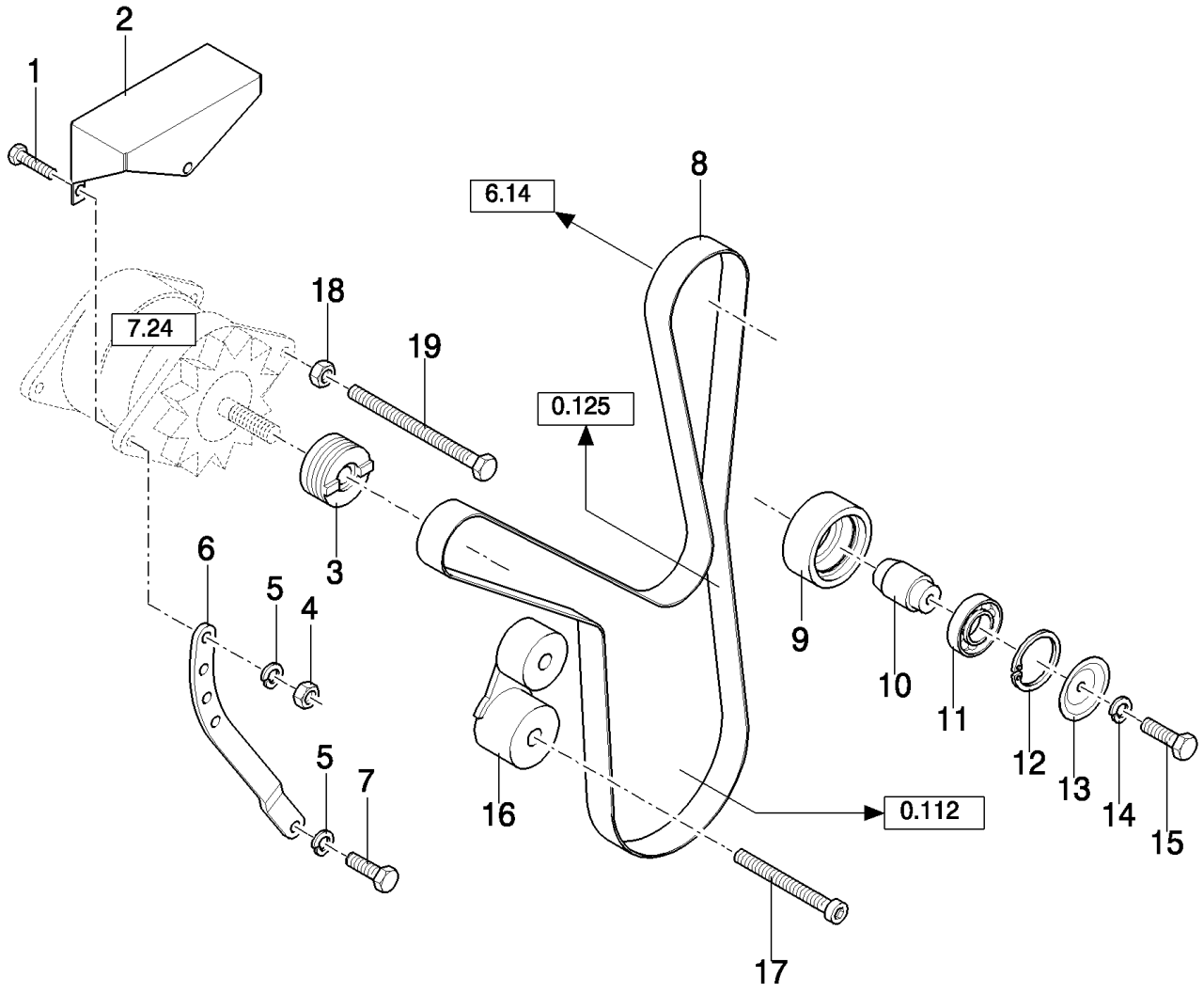

ONLY VALID FROM --1033001 (TX62-64-65-66) AND FROM --1077001 (NOT TX68PLUS)

TX68 COMBINE - BASE UNIT

01.05A(01) ENGINE ACCESSORIES

ссылка	Номер детали	Кол-во	Описание
1	9707516	1	SCREW, Hex, 1/2"-13 x 1 3/4", G5,
2	84032347	1	SUPPORT,
3	9850866	1	PULLEY,
4	280431	1	NUT, 1/2"-13, G5,
5	80679	2	WASHER, LOCK, 1/2",
6	84037811	1	SUPPORT, , BSN C315
6	84432576	1	SUPPORT, , ASN D316
7	87670	1	BOLT, Hex, 1/2"-13 x 1 1/4", G5, Full Thd,
8	84036070	1	BELT, TRANSMISSION,
9	9850523	1	WHEEL, IDLER,
10	84036187	1	SHAFT,
11	25953	1	BEARING, BALL,
12	370018	1	RING, SNAP,
13	84036190	1	COVER,
14	140046	1	WASHER, Belleville, M12,
15	86505982	1	BOLT, Hex, 7/16"-14 x 3 3/4", G5,
16	86013886	1	TENSIONER, BELT,
17	280160	1	SCREW, Hex Soc Hd, #10-32 x 3/4",
18	88871	1	NUT, LOCK, 1/2"-13, GC,
19	86000020	1	BOLT, Hex, 1/2"-13 x 6", G5,

ONLY VALID FROM --1033001 (TX62-64-65-66) AND FROM --1077001 (NOT TX68PLUS)

01.06A(01) EXHAUST AND AIR FILTER

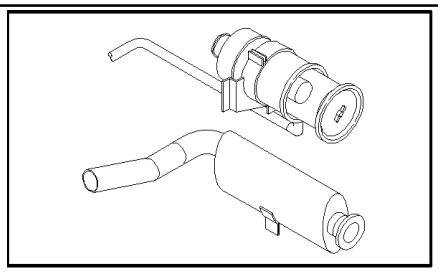

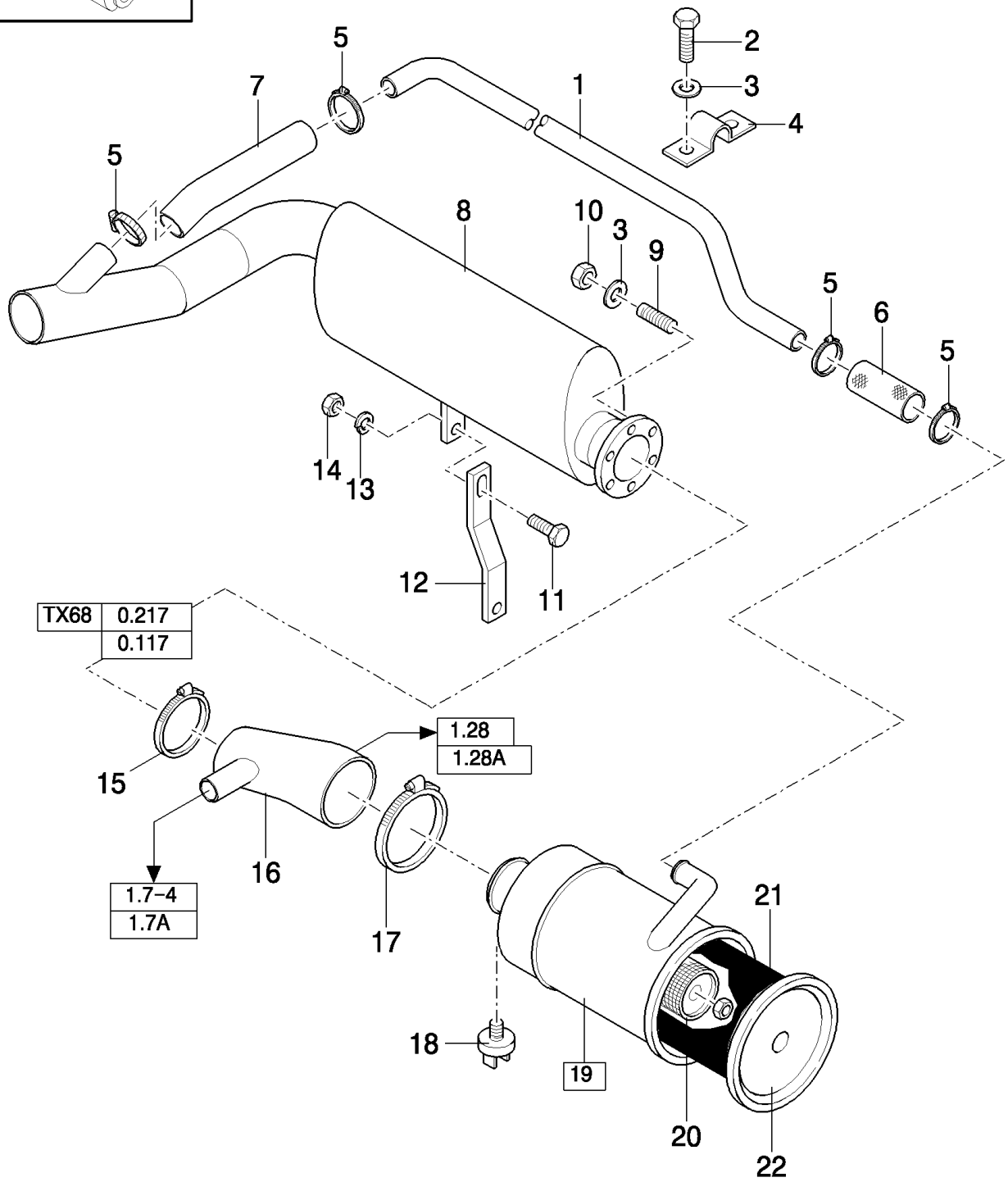

ONLY VALID FROM --1033001 (TX62-64-65-66) AND FROM --1077001 (NOT TX68PLUS)

TX68 COMBINE - BASE UNIT

01.06A(01) EXHAUST AND AIR FILTER

ссылка	Номер детали	Кол-во	Описание
1	84041533	1	TUBE, , -C1245
1	84097172	1	TUBE, , D1246-
2	120104	2	SCREW, Hex, M8 x 20, 8.8,
3	322358	6	WASHER, SPRING, Belleville, M8,
4	84037158	1	CLAMP,
5	360747	4	CLAMP,
6	84011850	1	HOSE,
7	84011048	1	HOSE, , FOR TX67 ONLY, -C1032
7	84042898	1	HOSE, , D1033-
8	84037244	1	MUFFLER, , FOR TX66-67-68 ONLY, -C1245
8	84097169	1	MUFFLER, , FOR TX 65-66-68 ONLY, D1246-
8	84015538	1	MUFFLER, , FOR TX63-64-65 ONLY, -C1245
8	84097170	1	MUFFLER, , FOR TX63 ONLY, D1246-
9	84031344	4	STUD,
10	84041352	4	NUT, LOCK, M8 x 1.25, Cl8.8, M8 (Cu)
11	43138	1	SCREW, Hex, M10 x 20, 8.8, Full Thd,
12	84037296	1	SUPPORT, , -C1065
12	84053457	1	SUPPORT, , -C0071
12	84097178	1	SUPPORT, , D1246-
13	140045	1	WASHER, SPRING, Belleville, M10,
14	100016	1	NUT, M10, Cl 8,
15	64706	1	CLAMP, , -C1245
15	89706924	1	CLAMP, , D1246-
16	84041281	1	HOSE, , FOR TX64-65-66-67-68 ONLY, -C1245
16	84097160	1	HOSE, HYDRAULIC, , FOR TX64-65-66-67-68 ONLY, D1246-
16	84043102	1	HOSE, , FOR TX62 ONLY
16	84043142	1	HOSE, HYDRAULIC, , FOR TX62 ONLY, FOR BLOW-OFF SYSTEM ONLY
16	84041280	1	HOSE, , FOR BLOW-OFF SYSTEM ONLY, FOR TX63-64-65-66-67-68 ONLY, -C1245
16	84097161	1	HOSE, , FOR TX63-64-65-66-67-68 ONLY, FOR BLOW-OFF SYSTEM ONLY, D1246-
17	337049	1	CLAMP,
18	84043184	1	SENDER UNIT,
19	84037140	1	FILTER, AIR, (20 to 22)
20	84031480	1	FILTER, ELEMENT,
21	84032106	1	FILTER, ELEMENT,
22	84068529	1	COVER,

ONLY VALID FROM --1033001 (TX62-64-65-66) AND FROM --1077001 (NOT TX68PLUS)

01.07(01) OIL SEPARATOR

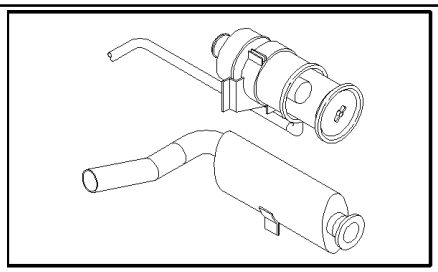

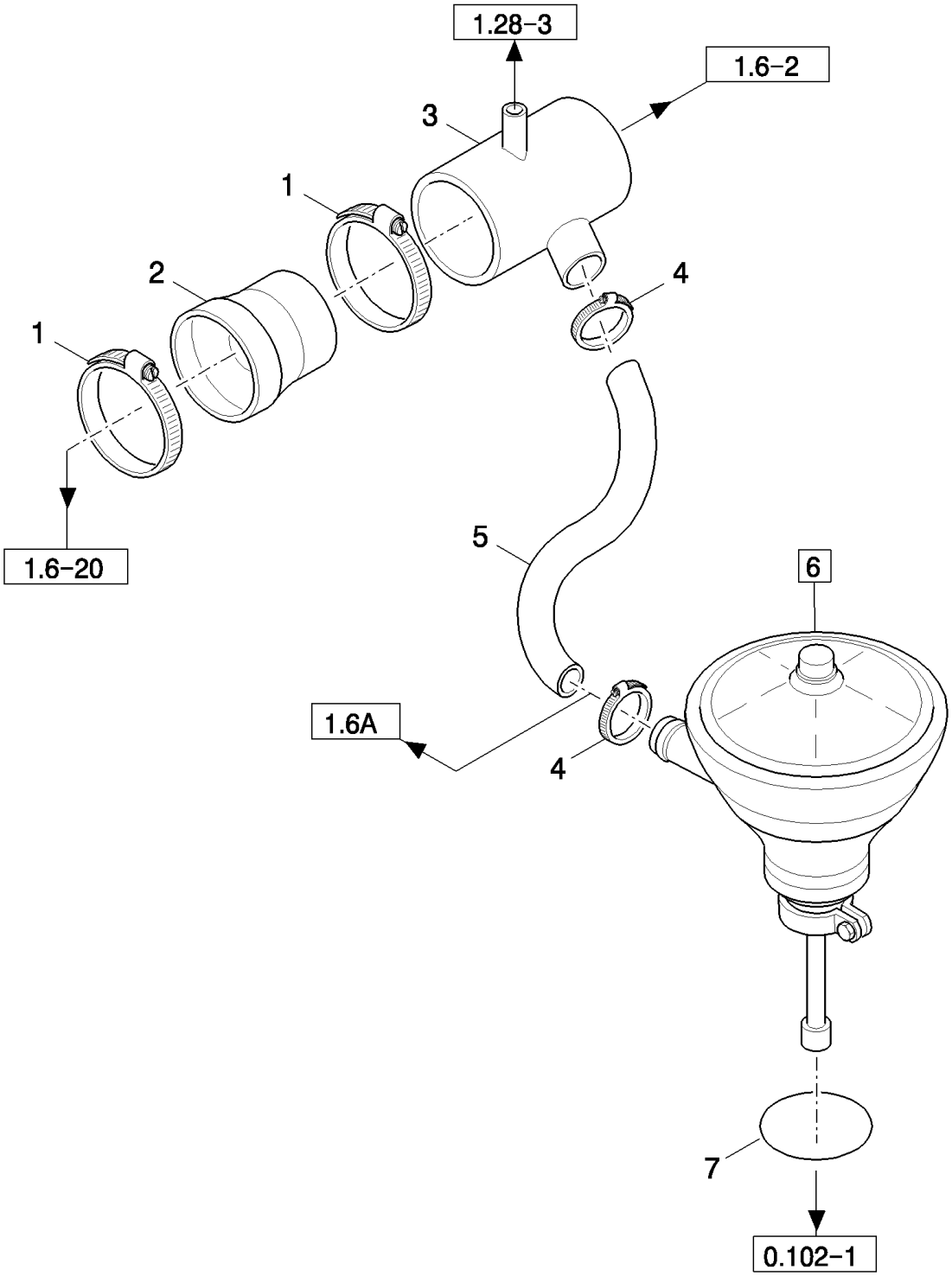

ONLY VALID FROM 4813001 (TX62) - 461033001 (TX63) - 4913001 (TX64) - 6613001 (TX65) - 5020001 (TX66) - 4404001 (TX67) AND FROM --1077001 (NOT TX68PLUS) UNTIL --1245999

TX68 COMBINE - BASE UNIT

01.07(01) OIL SEPARATOR

ссылка	Номер детали	Кол-во	Описание
1	64706	2	CLAMP, , FOR TX62-64-65-66 ONLY, -C1032
2	84026698	1	HOSE, , FOR TX62-64-65-66 ONLY, -C1032
3	84018019	1	TUBE, , FOR TX62-64-65-66 ONLY, -C1032
3	84038202	1	TUBE, RIGID, , FOR TX66 ONLY, FOR BLOW-OFF SYSTEM ONLY, -C1032
4	382528	2	CLAMP, , -C1032
4	382527	2	CLAMP, HOSE, , D1030-
5	84036692	1	HOSE, FLEXIBLE, , FOR TX62-64-65-66 ONLY, -C1032
6	84012669	1	OIL SEPARATOR, (7)
7	84032030	1	O-RING,

ONLY VALID FROM 4813001 (TX62) - 461033001 (TX63) - 4913001 (TX64) - 6613001 (TX65) - 5020001 (TX66) - 4404001 (TX67) AND FROM --1077001 (NOT TX68PLUS) UNTIL --1245999

01.07A(01) OIL SEPARATOR - D1246

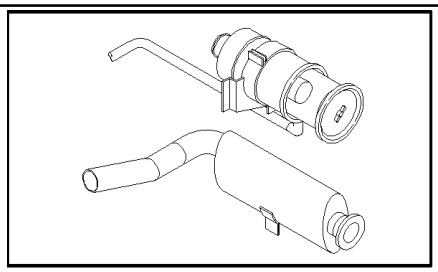

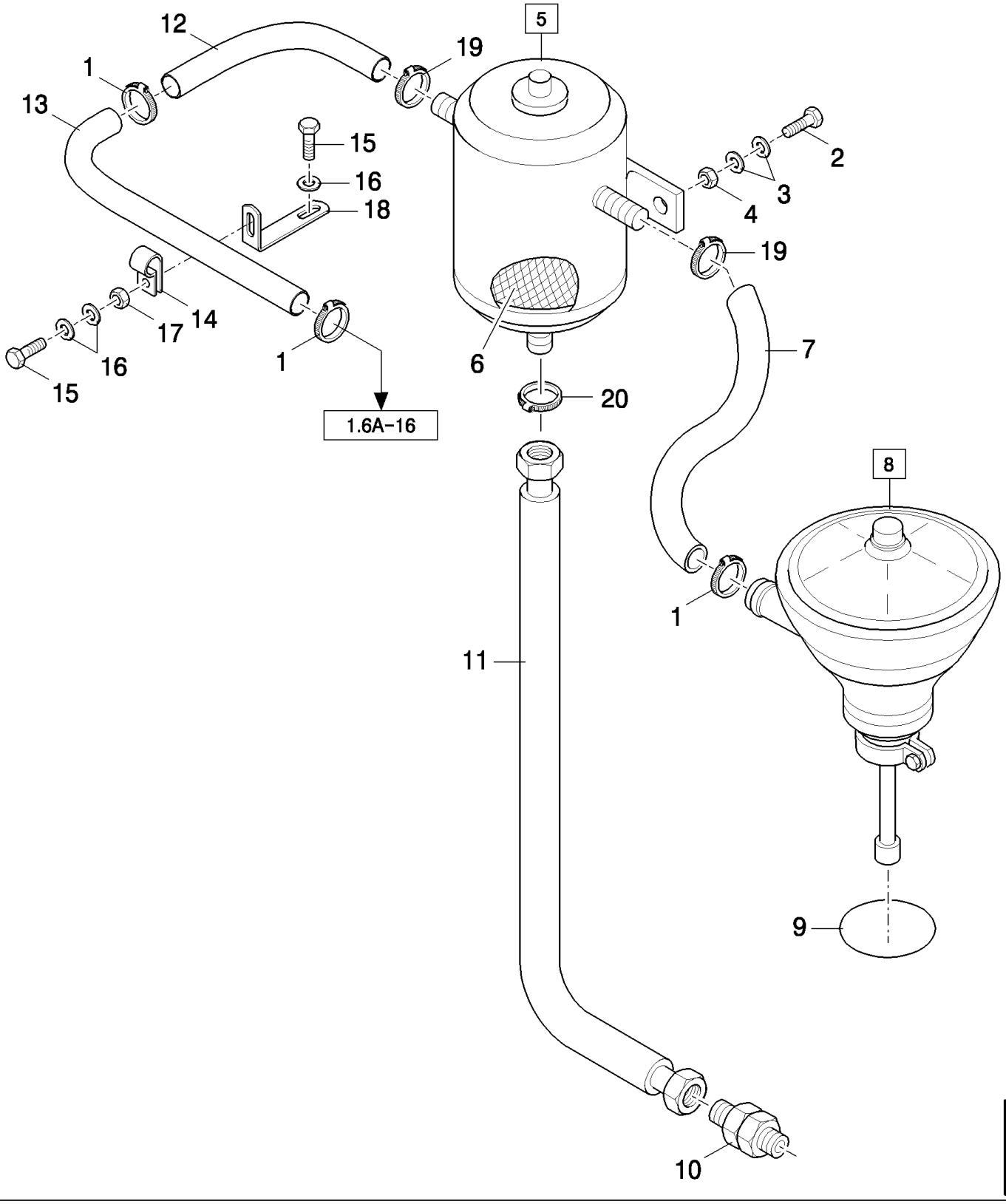

TX68 COMBINE - BASE UNIT

01.07A(01) OIL SEPARATOR - D1246

ссылка	Номер детали	Кол-во	Описание
1	382527	4	CLAMP, HOSE,
2	43140	2	BOLT, Hex, M10 x 30, 8.8, Full Thd,
3	140045	4	WASHER, SPRING, Belleville, M10,
4	100016	2	NUT, M10, Cl 8,
5	84431266	1	FILTER, ENGINE OIL, (6), -C1277
5	84441871	1	FILTER, ENGINE OIL, (6), BSN F278479
5	84461272	1	OIL SEPARATOR, , ASN D480
6	84433655	1	FILTER, ELEMENT,
7	84097184	1	HOSE, , BSN C479
7	84461509	1	HOSE, , ASN D480
8	84012669	1	OIL SEPARATOR, (9), BSN C479
8	84459266	1	OIL SEPARATOR, , ASN D480
9	84032030	1	O-RING, , BSN C479
9	87802519	1	FILTER, ELEMENT, , ASN D480
10	84433025	1	VALVE, ADVANCE,
11	84097180	1	HOSE, HYDRAULIC, , BSN C479
11	87319733	1	HOSE, , ASN D480
12	84431453	1	HOSE, , BSN C479
12	84461300	1	HOSE, , ASN D480
13	84097181	1	TUBE, , BSN C479
13	84461529	1	PIPE, VENTILATION, , ASN D480
14	9827902	1	CLAMP, 1", Insul, 3/8" Bolt,
15	120104	2	SCREW, Hex, M8 x 20, 8.8,
16	322358	4	WASHER, SPRING, Belleville, M8,
17	89706690	2	NUT, M8, Cl 8,
18	84097404	1	BRACKET,
19	382527	2	CLAMP, HOSE, , BSN C479
19	326082	2	CLAMP, , ASN D480
20	9706921	1	CLAMP, HOSE, #10, 0.56/1.06 Type F Worm, , ASN D480

01.08(01) ENGINE - SUPPORTS - FROM --1077001 (NOT FOR TX68PLUS)

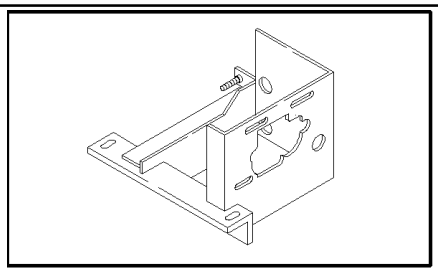

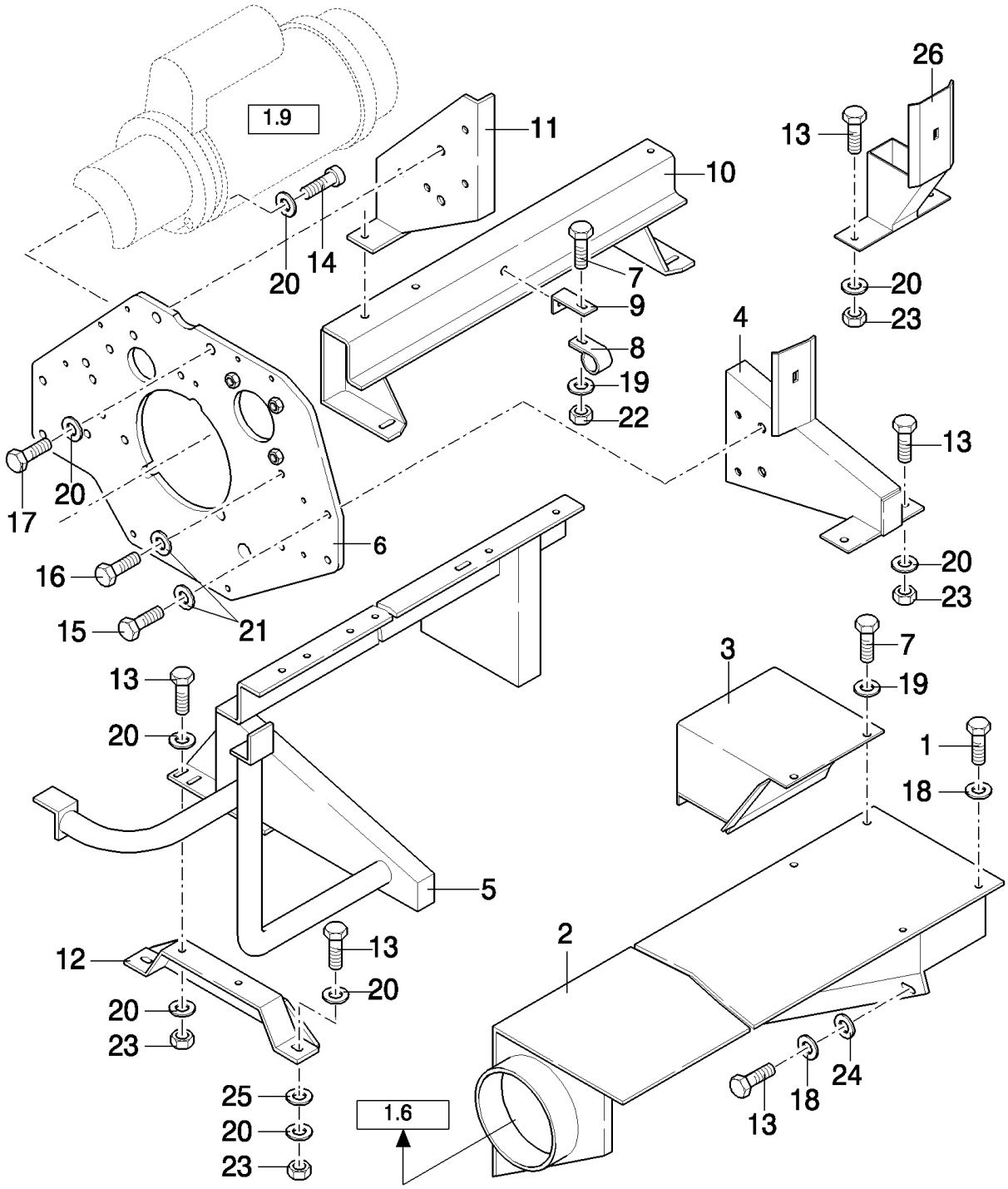

TX68 COMBINE - BASE UNIT

01.08(01) ENGINE - SUPPORTS - FROM --1077001 (NOT FOR TX68PLUS)

ссылка	Номер детали	Кол-во	Описание
1	80120099	4	BOLT, Hex, M6 x 16, 8.8,
2	9850535	1	COVER, , FOR TX66 ONLY, -C1032
2	89838257	1	COVER, , FOR TX62-64-65 ONLY, -C1032
3	9833974	1	COVER, , FOR TX62-64-65-66 ONLY, -C1032
4	9500862	1	SUPPORT, , FOR TX62-64-65-66 ONLY, -C1032
5	9839642	1	SUPPORT, , FOR TX66 ONLY, -C1032
5	84014551	1	SUPPORT, , FOR TX62-64-65 ONLY, -C1032
5	84017559	1	SUPPORT, , FOR TX66-67-68 ONLY, D1030-
5	84026473	1	SUPPORT, , FOR TX62-63-64-65 ONLY, D1033-
6	9832614	1	PLATE, , FOR TX62-64-65-66 ONLY, -C1032
6	84038851	1	PLATE, , D1030-
7	120104	3	SCREW, Hex, M8 x 20, 8.8,
8	701318	2	CLAMP,
9	9502789	1	SUPPORT,
10	9850519	1	SUPPORT, , FOR TX66 ONLY, -C1032
10	84015766	1	SUPPORT, , FOR TX62-64-65 ONLY, -C1032
10	84026507	1	SUPPORT, , FOR TX66-67-68 ONLY, D1030-
10	84026506	1	SUPPORT, , FOR TX62-63-64-65 ONLY, D1030-
11	9500856	1	SUPPORT,
12	9500043	1	SUPPORT, , FOR TX62-64-65-66 ONLY, -C1032
13	43140	10	BOLT, Hex, M10 x 30, 8.8, Full Thd,
14	300443	AR	SCREW, M10x35
14	300442	AR	SCREW, Hex Soc Hd, M10 x 30, 8.8,
15	43167	4	BOLT, Hex, M16 x 30, 8.8, Full Thd,
16	355259	4	SCREW, Hex, M16 x 65, 8.8, M16x65
17	88206	1	BOLT, Hex, 3/8"-16 x 1", G5, Full Thd,
18	322357	4	WASHER, SPRING, Belleville, M6,
19	322358	2	WASHER, SPRING, Belleville, M8,
20	140045	10	WASHER, SPRING, Belleville, M10,
21	140048	8	WASHER, SPRING, Belleville, M16,
22	9706690	1	NUT, M8, Cl 8,
23	100016	10	NUT, M10, Cl 8,
24	140040	2	WASHER, M6 x 22 x 2,
25	332909	8	WASHER, 6MM
26	84017412	1	SUPPORT, , D1030-

01.09(01) STARTER MOTOR - FROM --1077001 (NOT FOR TX68PLUS)

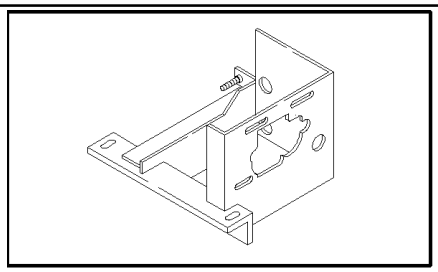

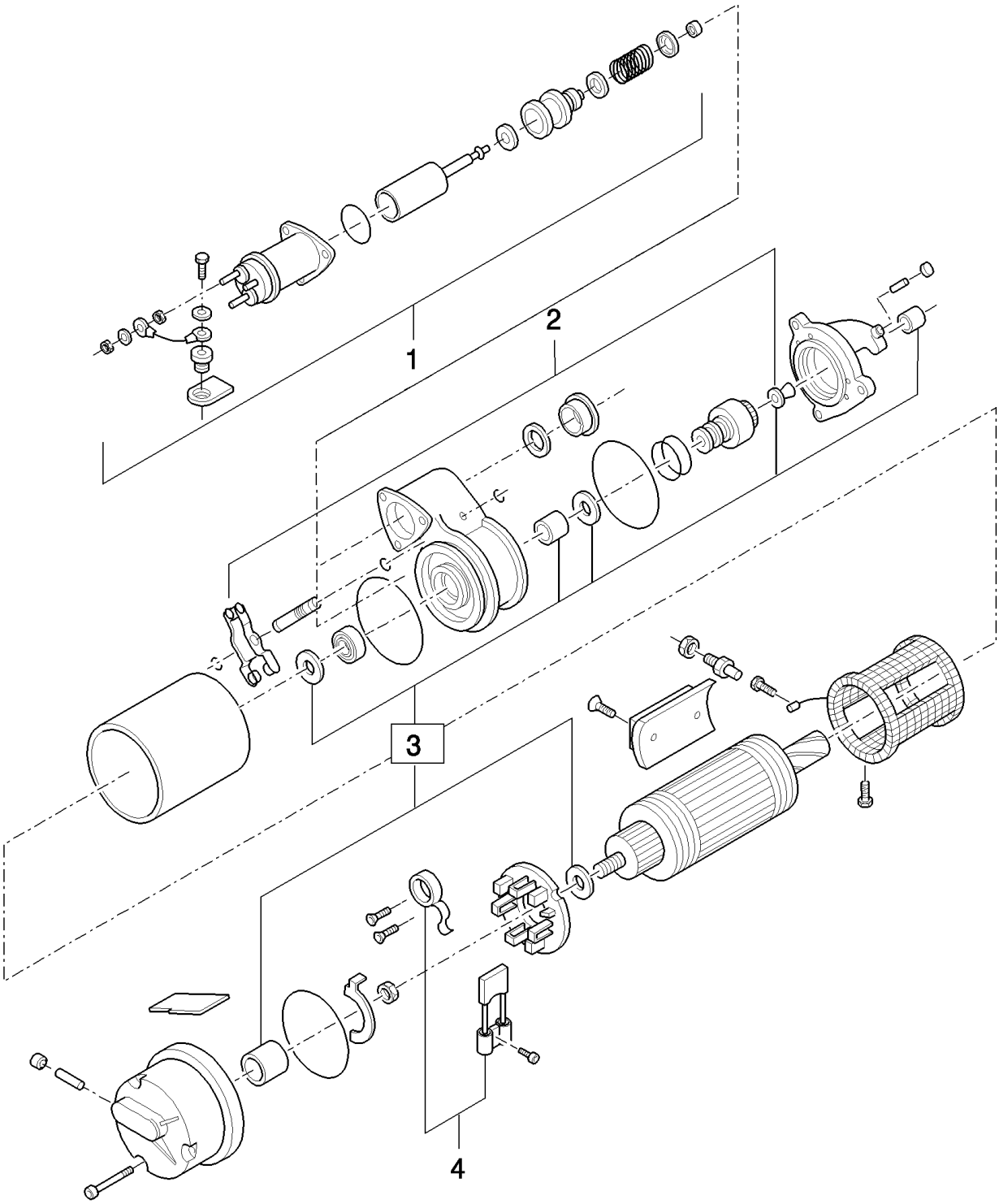

TX68 COMBINE - BASE UNIT

01.09(01) STARTER MOTOR - FROM --1077001 (NOT FOR TX68PLUS)

ссылка	Номер детали	Кол-во	Описание
	84017265	1	MOTOR, STARTER, (1 to 4), BSN C375
	84447906	1	MOTOR, STARTER, , ASN D376
1	9802177	1	SOLENOID,
2	86507499	1	KIT, SERVICE, Bushing
3	86507501	1	KIT, Shift lever
4	86507500	1	KIT, Brush, 12 Volt

01.10(01) ENGINE ACCESSORIES - FROM --1077001 (NOT FOR TX68PLUS)

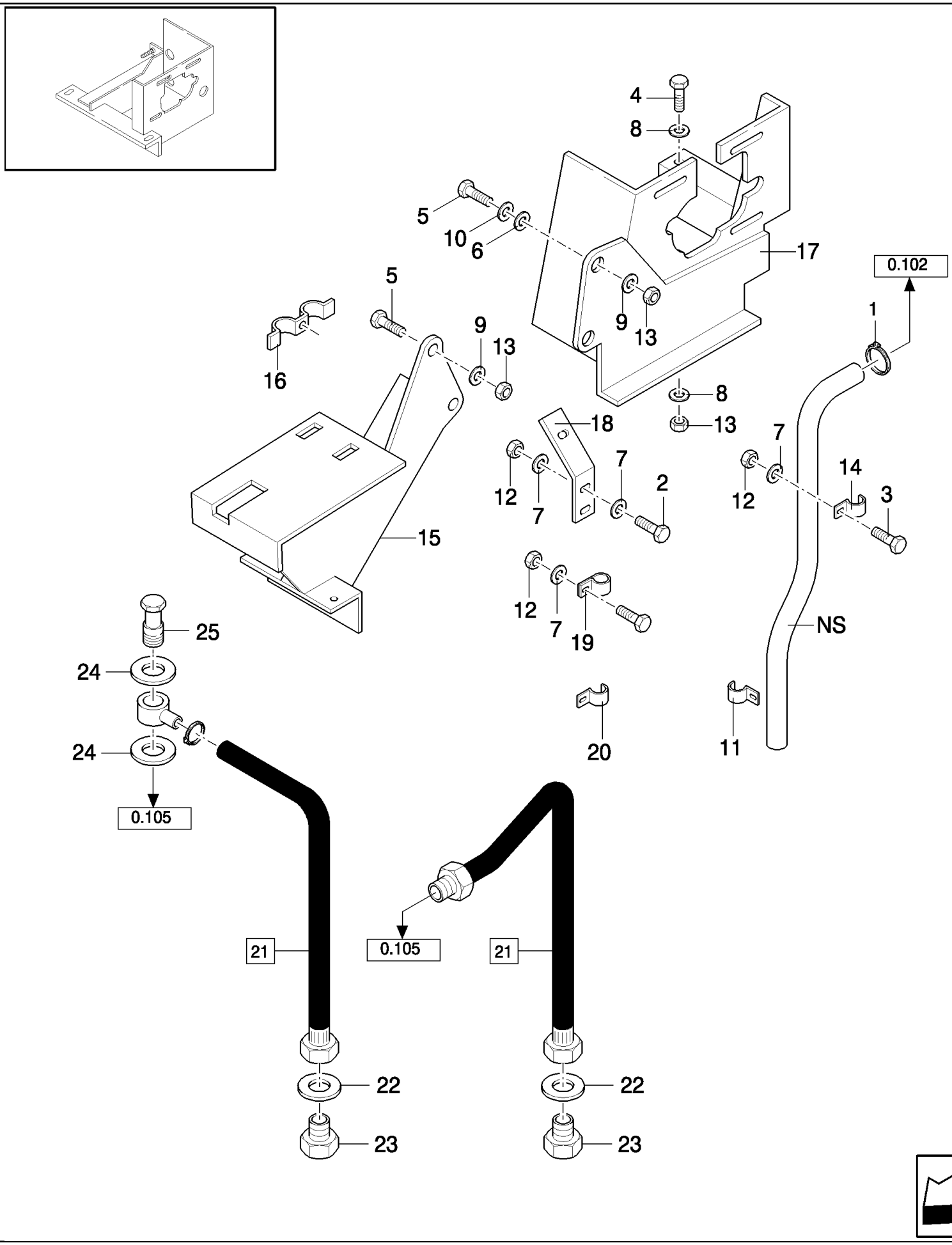

TX68 COMBINE - BASE UNIT

01.10(01) ENGINE ACCESSORIES - FROM --1077001 (NOT FOR TX68PLUS)

ссылка	Номер детали	Кол-во	Описание
1	382527	1	CLAMP, HOSE,
2	120104	AR	SCREW, Hex, M8 x 20, 8.8,
3	43127	AR	BOLT, Hex, M8 x 25, 8.8,
4	43140	1	BOLT, Hex, M10 x 30, 8.8, Full Thd,
5	87337	AR	BOLT, Hex, 3/4"-10 x 3", G5,
6	445151	1	WASHER, 20MM
7	322358	AR	WASHER, SPRING, Belleville, M8,
8	140045	AR	WASHER, SPRING, Belleville, M10,
9	322359	AR	WASHER, SPRING, Belleville, M20,
10	425971	1	WASHER, 20MM
11	438817	1	SUPPORT, , FOR TX62-64-65 ONLY, -C1032
12	9706690	AR	NUT, M8, Cl 8,
13	280375	AR	NUT, LOCK, 3/4"-10, GC,
14	701318	2	CLAMP,
15	9833549	1	SUPPORT, , FOR TX62-64-65-66 ONLY, -C1032
15	84036782	1	SUPPORT, , FOR TX67 ONLY, -C1032
15	84035862	1	SUPPORT, , D1033-
16	9503928	12	CLAMP,
17	9833553	1	SUPPORT, , FOR TX62-64-65-66 ONLY, -C1032
17	84017390	1	SUPPORT, , FOR TX67 ONLY, -C1032
17	84035743	1	SUPPORT, , D1033-
18	84019206	1	SUPPORT,
19	418407	4	CLAMP,
20	326080	2	CLAMP,
21	9593312	1	HOSE, (22,23), -C1032
21	84043483	1	HOSE, FLEXIBLE, (21 to 25), D1033-
22	9511034	1	GASKET, , D1033-
23	150060	1	PLUG, , D1033-
24	220122	2	SEAL, , D1033-
25	374955	1	SCREW, HOLLOW, , D1033-

01.11(01) MAIN DRIVE IDLER

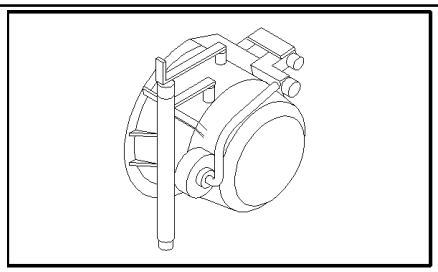

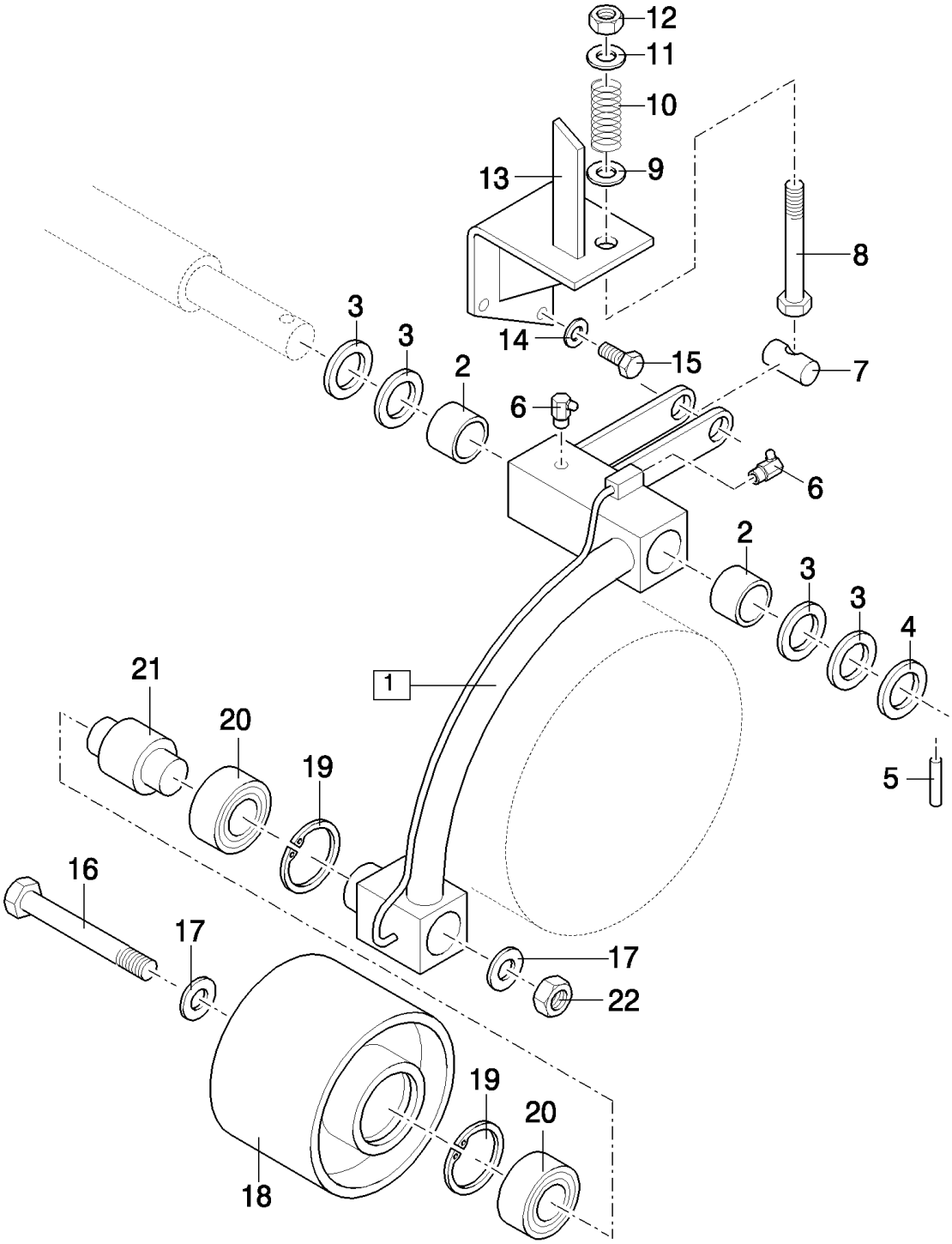

TX68 COMBINE - BASE UNIT

01.11(01) MAIN DRIVE IDLER

ссылка	Номер детали	Кол-во	Описание
1	9819071	1	ARM, (2)
2	420434	2	BUSHING,
3	140108	AR	WASHER,
4	84814901	1	WASHER,
5	412688	1	PIN, LOCK, M6 x 60, Slotted,
6	323787	2	NIPPLE, LUBE,
7	321886	1	SPINDLE,
8	450871	1	BOLT,
9	450869	1	WASHER,
10	392328	1	SPRING,
11	325594	1	WASHER,
12	412066	1	NUT, LOCK, M16 x 2, Cl 8, M16
13	435172	1	SUPPORT,
14	140045	2	WASHER, SPRING, Belleville, M10,
15	43140	2	BOLT, Hex, M10 x 30, 8.8, Full Thd,
16	354360	1	BOLT, Hex, M16 x 130, 8.8, M16x130
17	140190	2	WASHER,
18	9819089	1	WHEEL, IDLER, , BSN C315
18	84069866	1	IDLER, , ASN D316
19	370011	2	RING, SNAP, M52, Int,
20	84057966	2	BEARING, BALL,
21	9819057	1	BUSHING,
22	86000441	1	NUT, M16 x 2, Cl 8,

01.12(01) SPECIFIC PARTS FOR HYDROSTATIC DRIVE

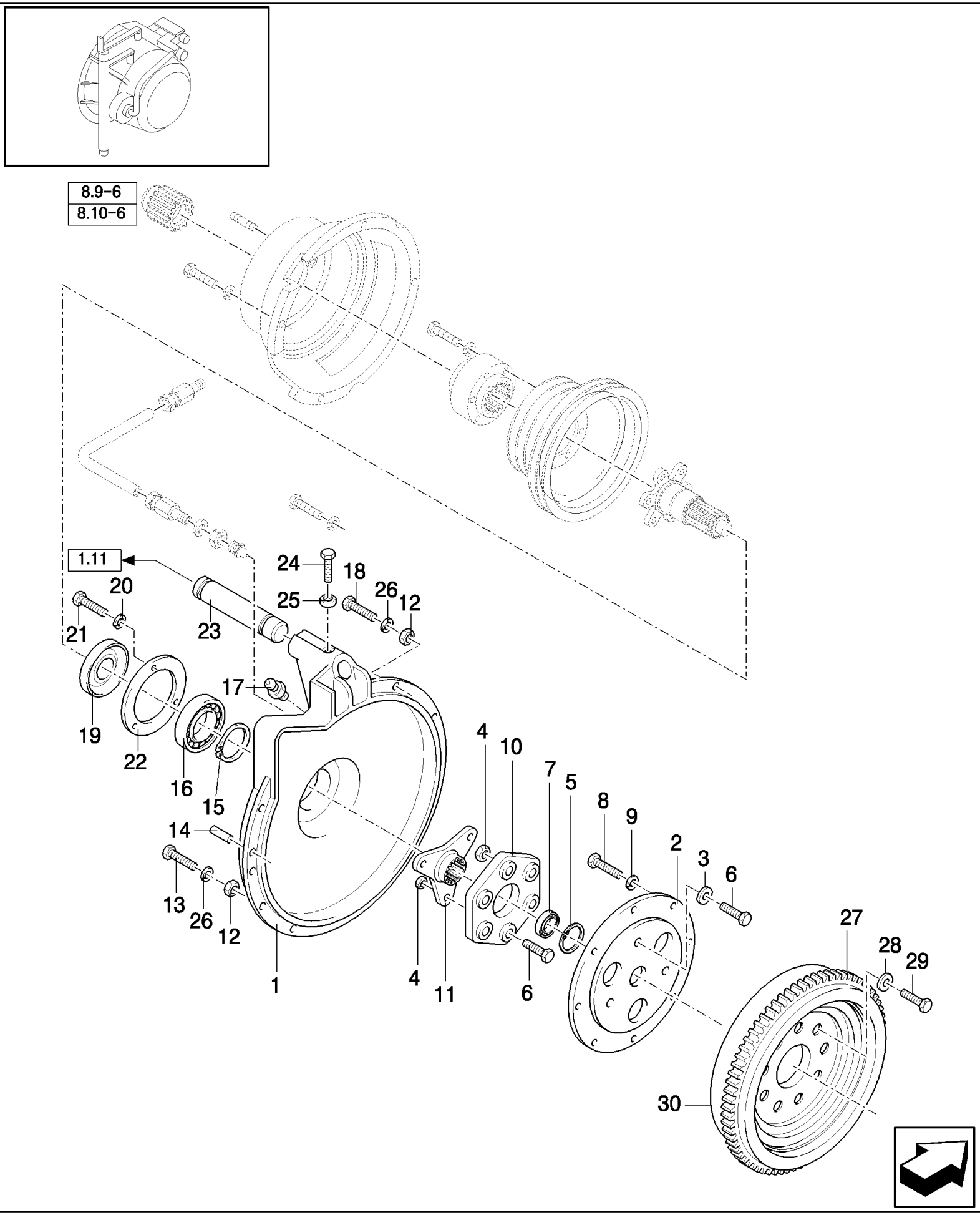

TX68 COMBINE - BASE UNIT

01.12(01) SPECIFIC PARTS FOR HYDROSTATIC DRIVE

ссылка	Номер детали	Кол-во	Описание
1	9832549	1	BELL HOUSING, , FOR TX62-63-64-65-66-67 ONLY, -C0069
1	84807834	1	BELL HOUSING, , FOR TX62-63-64-65-66-67 ONLY, D1246-
1	9838127	1	BELL HOUSING, , FOR TX68PLUS ONLY
1	9838127	1	BELL HOUSING, , NOT FOR TX68PLUS, FOR TX68 ONLY, -C1076
1	9832549	1	BELL HOUSING, , FOR TX68 ONLY, NOT FOR TX68PLUS, -C0069
1	84807834	1	BELL HOUSING, , NOT FOR TX68PLUS, FOR TX68 ONLY, D1246-
2	9837253	1	FLANGE, , FOR TX62-64-65-66 ONLY, -C1032
2	9835202	1	FLANGE, , FOR TX68PLUS ONLY
2	9835202	1	FLANGE, , NOT FOR TX68PLUS, FOR TX68 ONLY, -C1076
2	84037198	1	FLANGE, , FOR TX68 ONLY, NOT FOR TX68PLUS, D1077-
2	84037198	1	FLANGE, , FOR TX62-63-64-65-66-67 ONLY, D1030-
3	333040	3	WASHER,
4	100020	6	NUT, M16, Cl 8,
5	370011	1	RING, SNAP, M52, Int, , FOR TX68 ONLY
6	120091	6	BOLT, Hex, M16 x 60, 8.8,
7	443898	1	BEARING, BALL,
8	88434	8	BOLT, Hex, 3/8"-16 x 3/4", G5, Full Thd, , FOR TX62-64-65-66-67 ONLY
8	43138	8	SCREW, Hex, M10 x 20, 8.8, Full Thd, , FOR TX68 ONLY
9	140045	AR	WASHER, SPRING, Belleville, M10,
10	450679	1	COUPLING, FLEXIBLE,
11	433696	1	HUB, , FOR TX62-63-64-65-66-67 ONLY
11	9501125	1	GASKET, , FOR TX68PLUS ONLY
11	9501125	1	GASKET, , NOT FOR TX68PLUS, FOR TX68 ONLY, -C1076
11	433696	1	HUB, , FOR TX68 ONLY, NOT FOR TX68PLUS, D1077-
12	100016	10	NUT, M10, Cl 8, , FOR TX62-64-65-66-67 ONLY
12	337475	9	NUT, M12, Cl 10, , FOR TX68 ONLY
13	120112	AR	BOLT, Hex, M10 x 40, 8.8, Full Thd,
14	9511886	2	PIN,
15	370027	1	RING, SNAP, M60, Ext,
16	428162	1	BEARING ASSY,
17	332038	1	NIPPLE, LUBE,
17	332038	1	NIPPLE, LUBE, , FOR TX68 ONLY, NOT FOR TX68PLUS, D1077-
18	337563	4	BOLT, Hex, M12 x 40, 10.9, Full Thd, , FOR TX68 ONLY
19	433833	1	SEALRING,
20	322357	3	WASHER, SPRING, Belleville, M6,
21	80120099	3	BOLT, Hex, M6 x 16, 8.8,
22	433832	1	RING,
23	922155	1	SHAFT,
24	9706687	1	SCREW, Hex, M12 x 30, 8.8,
25	337475	1	NUT, M12, Cl 10,
26	140045	6	WASHER, SPRING, Belleville, M10,
26	140046	6	WASHER, Belleville, M12,
27	9825192	1	FLYWHEEL, ENGINE, , FOR TX62-64-65-66-67 ONLY, FOR C1245 SEE FIGURE 00.110 OR 00.210, D1246-

01.12(01) SPECIFIC PARTS FOR HYDROSTATIC DRIVE

ссылка	Номер детали	Кол-во	Описание
27	84439857	1	FLYWHEEL, ENGINE, , FOR C1245 SEE FIGURE 00.110 OR 00.210, FOR TX68 ONLY, D1246-
28	140047	8	WASHER, LOCK, 14MM
29	280690	8	BOLT, Hex, 9/16"-18 x 1 1/4", G5, Full Thd,
30	83949153	1	GEAR, RING, , FOR C1245 SEE FIGURE 00.110 OR 00.210, D1246-

01.13(01) SPECIFIC PARTS FOR HYDROSTATIC DRIVE

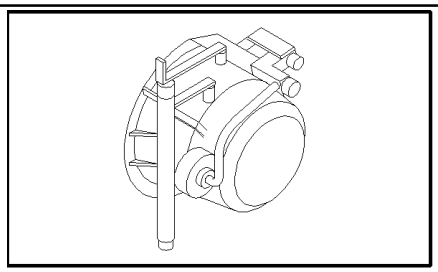

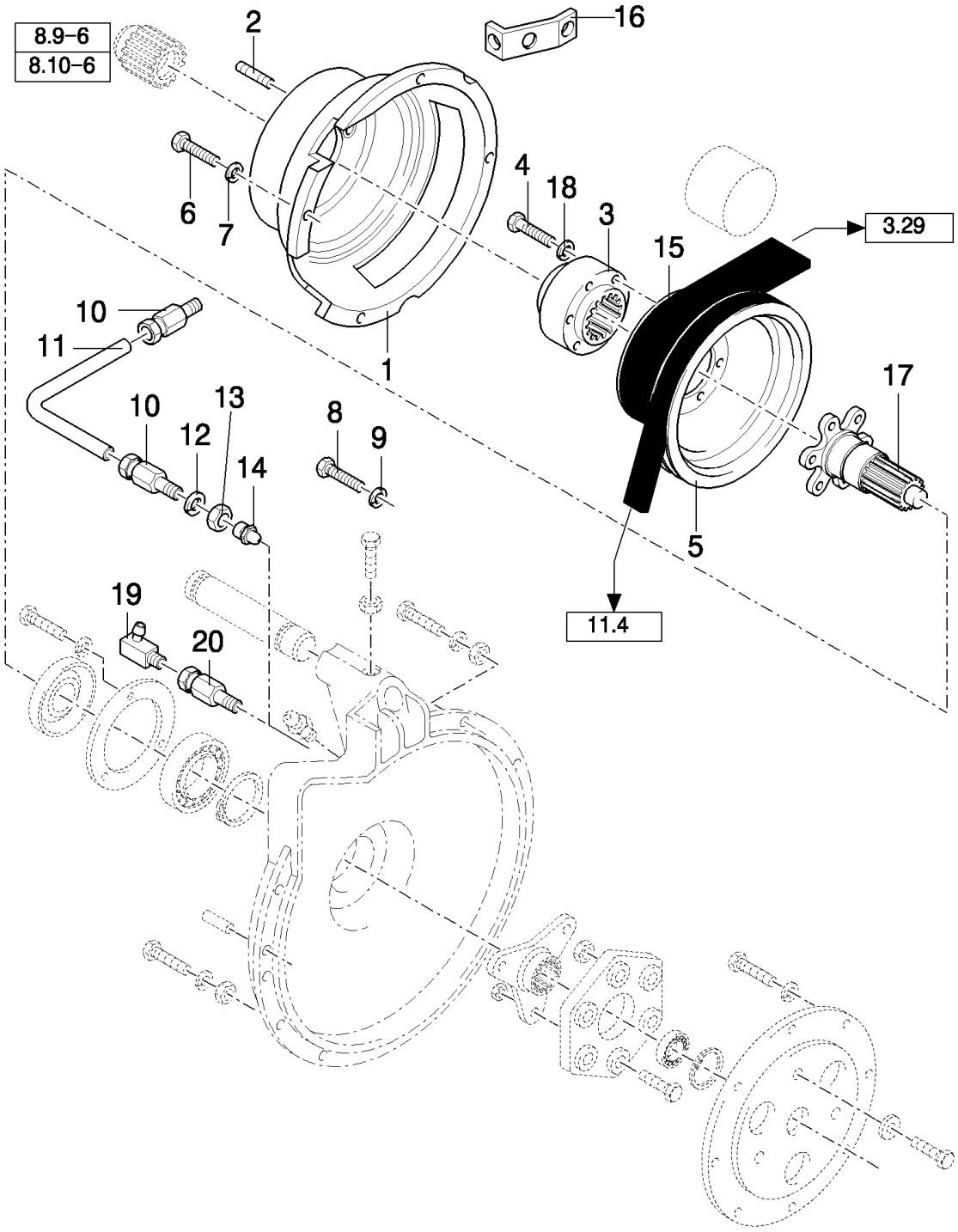

TX68 COMBINE - BASE UNIT

01.13(01) SPECIFIC PARTS FOR HYDROSTATIC DRIVE

ссылка	Номер детали	Кол-во	Описание
1	9832551	1	HOUSING, , FOR TX62-64-65-66 ONLY, -C6410
1	84038948	1	HOUSING, , FOR TX62-64-65-66 ONLY, -C0036
1	84038368	1	HOUSING, , FOR TX62-63-64-65-66-67 ONLY, D1030-
1	84000237	1	HOUSING, , FOR TX68 ONLY, -C6410
1	84038368	1	HOUSING, , FOR TX68 ONLY, D6410-
2	350341	4	STUD, M12, FOR TX62-64-65-66-67 ONLY, -C1032
2	110030	4	STUD, M12, FOR TX62-63-64-65-66-67 ONLY, D1033-
2	84042068	4	STUD, M16, FOR TX62-64-65-66-67 ONLY
2	412599	4	STUD, , FOR TX68 ONLY, -C6620
2	110030	4	STUD, , FOR TX68 ONLY, D6620-
3	454019	1	HUB, , -C6410
3	84038341	1	HUB, , D6410-
4	120071	6	BOLT, Hex, M10 x 65, 8.8, , -C6410
4	120073	6	BOLT, Hex, M10 x 80, 8.8, , D6410-
5	454021	1	PULLEY, , FOR TX64-65-66 ONLY, -C1032
5	9832401	1	PULLEY, , FOR TX63-64-65-66 ONLY, D1033-
5	9832401	1	PULLEY, , FOR TX62-67-68 ONLY
6	337563	6	BOLT, Hex, M12 x 40, 10.9, Full Thd,
7	140046	6	WASHER, Belleville, M12,
8	9512573	2	BOLT, Hex, M20 x 40, 10.9, , FOR TX62-64-65-66 ONLY
8	84005859	2	BOLT, Hex, M14 x 1.5 x 120, 8.8, M14x1.5x120, FOR TX68 ONLY
9	322359	2	WASHER, SPRING, Belleville, M20, , FOR TX62-64-65 ONLY
9	140047	2	WASHER, LOCK, 14MM, FOR TX68 ONLY
10	9510459	2	CONNECTOR, HYD., , FOR TX68 ONLY, NOT FOR TX68PLUS, -C1076
11	84000635	1	TUBE, RIGID, , NOT FOR TX68PLUS, FOR TX68 ONLY, -C1076
12	140045	1	WASHER, SPRING, Belleville, M10, , FOR TX68 ONLY, NOT FOR TX68PLUS, -C1076
13	100016	1	NUT, M10, Cl 8, , NOT FOR TX68PLUS, FOR TX68 ONLY, -C1076
14	321204	1	NIPPLE, LUBE, M6 x 1, 16mm lg, , FOR TX68 ONLY, NOT FOR TX68PLUS, -C1076
15	922911	1	BELT, , FOR TX64-65-66 ONLY, -C1032
15	9831571	1	BELT, , FOR TX64-65-66 ONLY, D1033-
15	9831571	1	BELT, , FOR TX62-63-67-68 ONLY
16	84036209	1	BRACKET,
17	9837254	1	SHAFT, , FOR TX62-63-64-65-66-67 ONLY
17	454022	1	SHAFT, , FOR TX68PLUS ONLY
17	454022	1	SHAFT, , NOT FOR TX68PLUS, FOR TX68 ONLY, -C1076
17	9837254	1	SHAFT, , FOR TX68 ONLY, NOT FOR TX68PLUS, D1077-
18	140045	6	WASHER, SPRING, Belleville, M10, , FOR TX62-64-65-66-67 ONLY
18	140046	6	WASHER, Belleville, M12, , FOR TX68 ONLY
19	332040	1	NIPPLE, LUBE, 90є, 1/8" NPT x .84" lg, , FOR TX68PLUS ONLY
20	9510459	1	CONNECTOR, HYD., , FOR TX68PLUS ONLY

01.14(01) SPECIFIC PARTS FOR HYDROSTATIC DRIVE

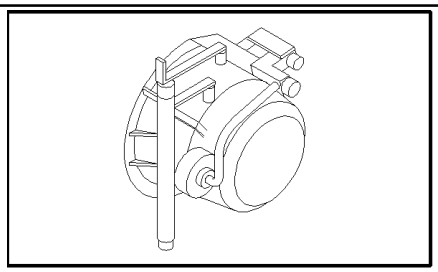

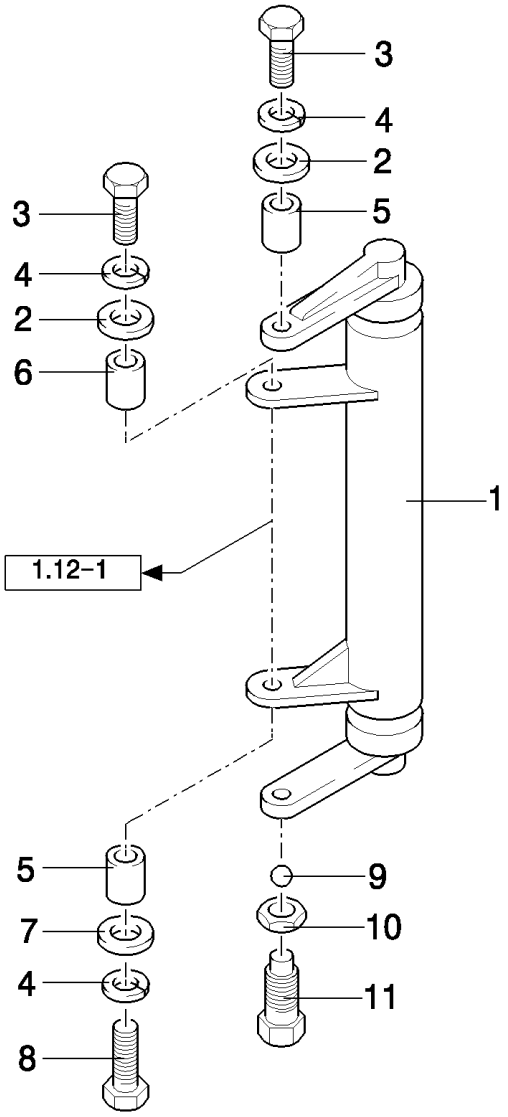

TX68 COMBINE - BASE UNIT

01.14(01) SPECIFIC PARTS FOR HYDROSTATIC DRIVE

ссылка	Номер детали	Кол-во	Описание
1	9832111	1	SUPPORT,
2	378245	2	WASHER, M12, 13MM
3	337563	2	BOLT, Hex, M12 x 40, 10.9, Full Thd,
4	140046	3	WASHER, Belleville, M12,
5	200201	2	BUSHING,
6	42610	1	BUSHING,
7	140085	1	WASHER, 13MM
8	120122	1	BOLT, Hex, M12 x 50, 8.8, Full Thd,
9	210006	1	BALL,
10	100095	1	NUT, Thin, M16 x 2, Cl 04,
11	412171	1	SET SCREW, Hex Soc, M16 x 60, M16x60

01.15(01) BRUSH IN DUST SCREEN - ACCESSORIES

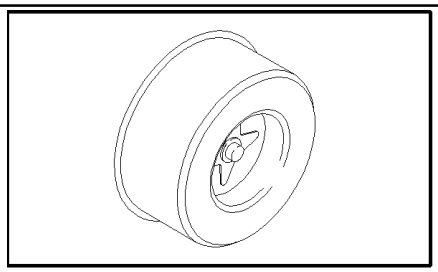

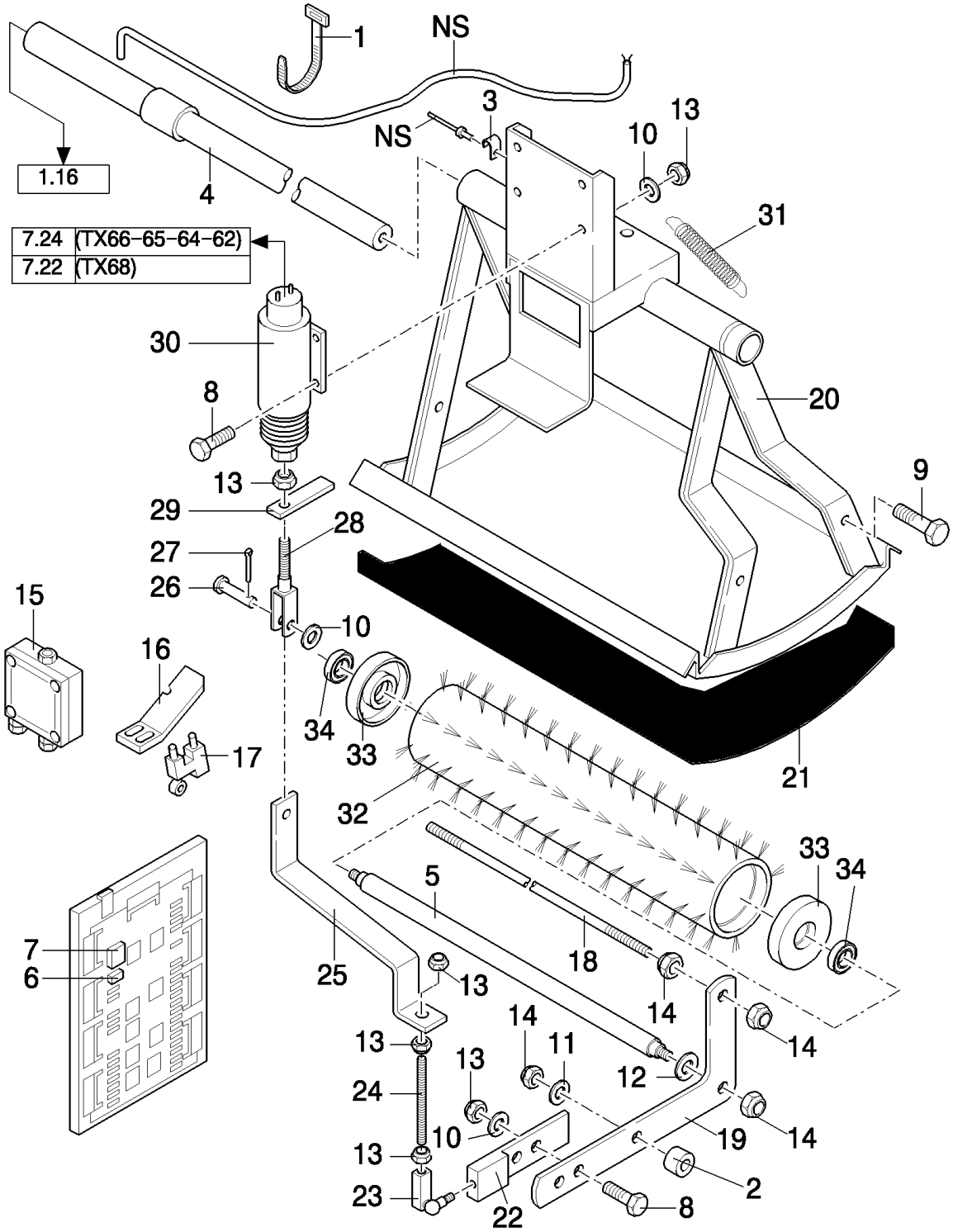

TX68 COMBINE - BASE UNIT

01.15(01) BRUSH IN DUST SCREEN - ACCESSORIES

ссылка	Номер детали	Кол-во	Описание
1	323597	3	STRAP, CABLE, M9 x 165 or M5 x 197,
2	9813110	2	BUSHING,
3	9507807	1	CLAMP,
4	89839730	1	SHAFT, , NOT FOR TX68PLUS, FOR TX68 ONLY, -C1076
4	84026532	1	SHAFT, , FOR TX68 ONLY, NOT FOR TX68PLUS, D1077-
4	89839730	1	SHAFT, , FOR TX66 ONLY, -C1032
4	9817916	1	SHAFT, , FOR TX62-64-65 ONLY, -C1032
4	84026532	1	SHAFT, , FOR TX66-67-68 ONLY, FOR TX68PLUS ONLY, D1030-
4	84011999	1	SHAFT, , FOR TX62-63-64-65 ONLY, D1033-
5	9817134	1	SHAFT, , FOR TX66-67-68 ONLY
5	9817134	1	SHAFT, , FOR TX62-64-65 ONLY, -C1032
5	84012009	1	SHAFT, , FOR TX62-63-64-65 ONLY, D1033-
6	9623774	1	FUSE, 15A
7	84000651	1	RELAY,
8	120104	8	SCREW, Hex, M8 x 20, 8.8,
9	120112	2	BOLT, Hex, M10 x 40, 8.8, Full Thd,
10	140016	10	WASHER, M8 x 16 x 1.6,
11	378244	2	WASHER, M10,
12	80702	2	WASHER, 3/8",
13	412250	13	NUT, LOCK, M8 x 1.25, Cl 8,
14	100037	8	NUT, M10 x 1.5, Cl 8,
15	9833943	1	TIMER, , FOR TX62-64-65-66 ONLY, -C7580
16	9819885	1	SUPPORT, , FOR TX62-64-65-66 ONLY, -C7580
17	430267	1	SWITCH, , FOR TX62-64-65-66 ONLY, -C7580
18	9817135	1	ROD, , FOR TX66-67-68 ONLY
18	9817135	1	ROD, , FOR TX62-64-65 ONLY, -C1032
18	84012014	1	ROD, , FOR TX62-63-64-65 ONLY, D1033-
19	9817289	2	ARM,
20	9850503	1	SCREEN, , NOT FOR TX68PLUS, FOR TX68 ONLY, -C1076
20	84021688	1	SCREEN, , FOR TX68 ONLY, NOT FOR TX68PLUS, D1077-
20	9850503	1	SCREEN, , FOR TX66 ONLY, -C1032
20	9819949	1	SCREEN, , FOR TX62-64-65 ONLY, -C1032
20	84021688	1	SCREEN, , FOR TX66-67-68 ONLY, FOR TX68PLUS ONLY, D1030-
20	84012013	1	SCREEN, , FOR TX62-63-64-65 ONLY, D1033-
21	9502938	1	INSULATOR, , FOR TX66-67-68 ONLY
21	9502938	1	INSULATOR, , FOR TX62-64-65 ONLY, -C1032
21	84011894	1	INSULATOR, , FOR TX62-63-64-65 ONLY, D1033-
22	9817137	1	SUPPORT, , FOR TX66-67-68 ONLY
22	9817137	1	SUPPORT, , FOR TX62-64-65 ONLY, -C1032
22	84012011	1	SUPPORT, , FOR TX62-63-64-65 ONLY, D1033-
23	412439	1	BALL JOINT,
24	9850506	1	ROD, , FOR TX63-66-67-68 ONLY
24	9817138	1	ROD, , FOR TX62-64-65 ONLY
25	9817139	1	BRACKET,

TX68 COMBINE - BASE UNIT

01.15(01) BRUSH IN DUST SCREEN - ACCESSORIES

ссылка	Номер детали	Кол-во	Описание
26	335040	1	PIN, CLEVIS, M8 x 28,
27	9512667	1	PIN, SPLIT (COTTER), M2 x 20,
28	921491	1	YOKE,
29	9817140	1	PLATE, COVER,
30	9817107	1	ELECTROMAGNET,
31	9837721	1	SPRING,
32	9815839	1	BRUSH, , FOR TX66-67-68 ONLY
32	9815839	1	BRUSH, , FOR TX62-64-65 ONLY, -C1032
32	84012010	1	BRUSH, , FOR TX62-63-64-65 ONLY, D1033-
33	9817133	2	SUPPORT,
34	9815813	2	BEARING ASSY,

01.16(01) ROTARY SCREEN

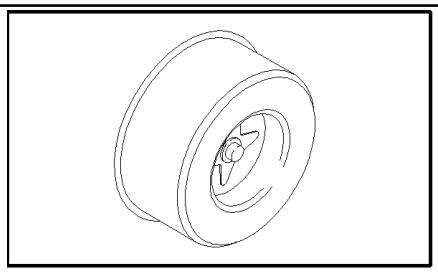

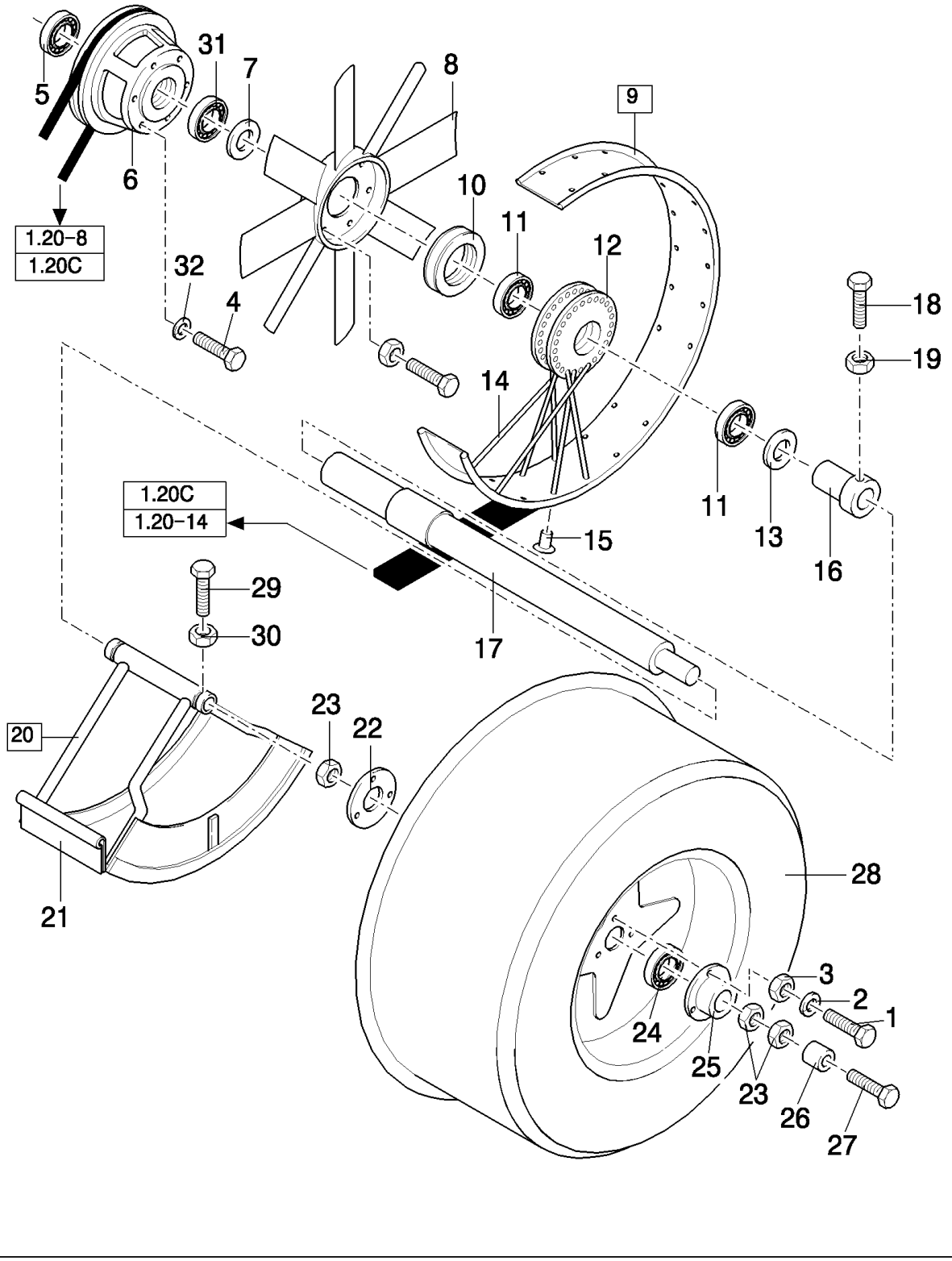

TX68 COMBINE - BASE UNIT

01.16(01) ROTARY SCREEN

ссылка	Номер детали	Кол-во	Описание
1	80120099	AR	BOLT, Hex, M6 x 16, 8.8,
2	322357	AR	WASHER, SPRING, Belleville, M6,
3	15896221	AR	NUT, M6, Cl 10,
4	43138	6	SCREW, Hex, M10 x 20, 8.8, Full Thd, , FOR TX66-68 ONLY
4	11106231	6	BOLT, Hex, M10 x 25, 10.9, Full Thd, , FOR TX62-63-64-65-67 ONLY
5	25953	1	BEARING, BALL,
6	9839593	1	PULLEY, , NOT FOR TX68PLUS, FOR TX68 ONLY, -C1076
6	9815490	1	PULLEY, , FOR TX68 ONLY, NOT FOR TX68PLUS, D1077-
6	9839593	1	PULLEY, , FOR TX66 ONLY, -C1032
6	9815490	1	PULLEY, , FOR TX66 ONLY, D1033-
6	9815490	1	PULLEY, , FOR TX68PLUS ONLY, FOR TX62-63-64-65-67-68 ONLY
7	417723	1	SEAL, , FOR TX68 ONLY, NOT FOR TX68PLUS, -C1076
7	391472	1	SEALRING, , NOT FOR TX68PLUS, FOR TX68 ONLY, D1077-
7	417723	1	SEAL, , FOR TX66 ONLY, -C1032
7	391472	1	SEALRING, , FOR TX66-67-68 ONLY, FOR TX68PLUS ONLY, D1030-
7	391472	1	SEALRING, , FOR TX62-63-64-65 ONLY
8	9839840	1	FAN, , FOR TX66-68 ONLY, -C4450
8	84017673	1	FAN, , FOR TX66 ONLY, -C0037
8	84014798	1	FAN, , FOR TX68PLUS ONLY
8	9815487	1	FAN, , FOR TX62-64-65 ONLY, -C4450
8	84014797	1	FAN, , FOR TX62-64-65 ONLY, -C0037
8	84014798	1	FAN, , FOR TX62-63-64-65-66-67 ONLY, D1030-
8	84017673	1	FAN, , NOT FOR TX68PLUS, FOR TX68 ONLY, -C0045
8	84014798	1	FAN, , FOR TX68 ONLY, NOT FOR TX68PLUS, D1076-
9	9839724	1	WHEEL ASSY, (10 to 16), FOR TX63-66-67-68 ONLY
9	9502873	1	WHEEL ASSY, (10 to 16), FOR TX62-64-65 ONLY, -C1032
9	9839724	1	WHEEL ASSY, (10 to 16), FOR TX62-64-65 ONLY, D1033-
10	397101	1	HOUSING, BEARING,
11	364908	2	BEARING ASSY,
12	9502870	1	HUB,
13	391472	1	SEALRING,
14	9839729	36	SPOKE, , FOR TX63-66-67-68 ONLY
14	9502867	36	SPOKE, , FOR TX62-64-65 ONLY, -C1032
14	9839729	36	SPOKE, , FOR TX62-64-65 ONLY, D1033-
15	9502866	36	PLUG,
16	9817917	1	BUSHING,
17	9850658	1	SHAFT, , NOT FOR TX68PLUS, FOR TX68 ONLY, -C1076
17	84026531	1	SHAFT, , FOR TX68 ONLY, NOT FOR TX68PLUS, D1077-
17	9850658	1	SHAFT, , FOR TX66 ONLY, -C1032
17	84026531	1	SHAFT, , FOR TX66-67-68 ONLY, FOR TX68PLUS ONLY, D1030-
17	754254	1	SHAFT, , FOR TX62-64-65 ONLY, -C1032
17	84011858	1	SHAFT, , FOR TX62-63-64-65 ONLY, D1033-
18	43127	1	BOLT, Hex, M8 x 25, 8.8,
19	9706690	8	NUT, M8, Cl 8,

TX68 COMBINE - BASE UNIT

01.16(01) ROTARY SCREEN

ссылка	Номер детали	Кол-во	Описание
20	9839721	1	SCREEN, (21), FOR TX66-67-68 ONLY
20	9502939	1	SCREEN, (21), FOR TX62-64-65 ONLY, -C1032
20	84011895	1	SCREEN, (21), FOR TX62-63-64-65 ONLY, D1033-
21	9502938	1	INSULATOR, , FOR TX62-64-65-66-67-68 ONLY
21	84011894	1	INSULATOR, , FOR TX63 ONLY
22	753576	1	SUPPORT, , FOR TX66-67-68 ONLY
22	753576	2	SUPPORT, , FOR TX62-63-64-65 ONLY
23	337475	AR	NUT, M12, Cl 10,
24	362804	1	BEARING ASSY,
25	365018	1	FLANGE,
26	434182	1	BUSHING,
27	120122	1	BOLT, Hex, M12 x 50, 8.8, Full Thd, M10x50, FOR TX62-64-65-66 ONLY, -C1032
27	120122	1	BOLT, Hex, M12 x 50, 8.8, Full Thd, M10x50, FOR TX68 ONLY, -C1065
27	84032079	1	SCREW, , FOR TX68 ONLY, D1066-
27	84032079	1	SCREW, , FOR TX62-63-64-65-66-67 ONLY, D1030-
28	9839716	1	SCREEN, , FOR TX66-67-68 ONLY
28	922084	1	HAMMER, , FOR TX62-64-65 ONLY, -C1032
28	84011888	1	SCREEN, , FOR TX62-63-64-65 ONLY, D1033-
29	120201	1	BOLT, Hex, M10 x 35, 8.8, Full Thd,
30	100016	3	NUT, M10, Cl 8,
31	25953	1	BEARING, BALL, , FOR TX68 ONLY, NOT FOR TX68PLUS, -C1076
31	364908	1	BEARING ASSY, , NOT FOR TX68PLUS, FOR TX68 ONLY, D1077-
31	25953	1	BEARING, BALL, , FOR TX66 ONLY, -C1032
31	364908	1	BEARING ASSY, , FOR TX63-66-67-68 ONLY, FOR TX68PLUS ONLY, D1030-
31	364908	1	BEARING ASSY, , FOR TX62-64-65 ONLY
32	140045	6	WASHER, SPRING, Belleville, M10,

01.17(01) GUARDS FOR ROTARY SCREEN

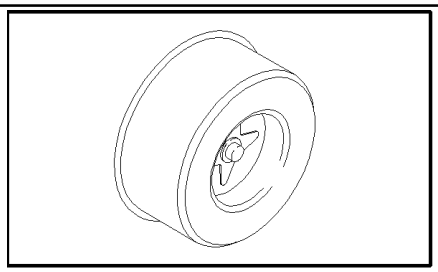

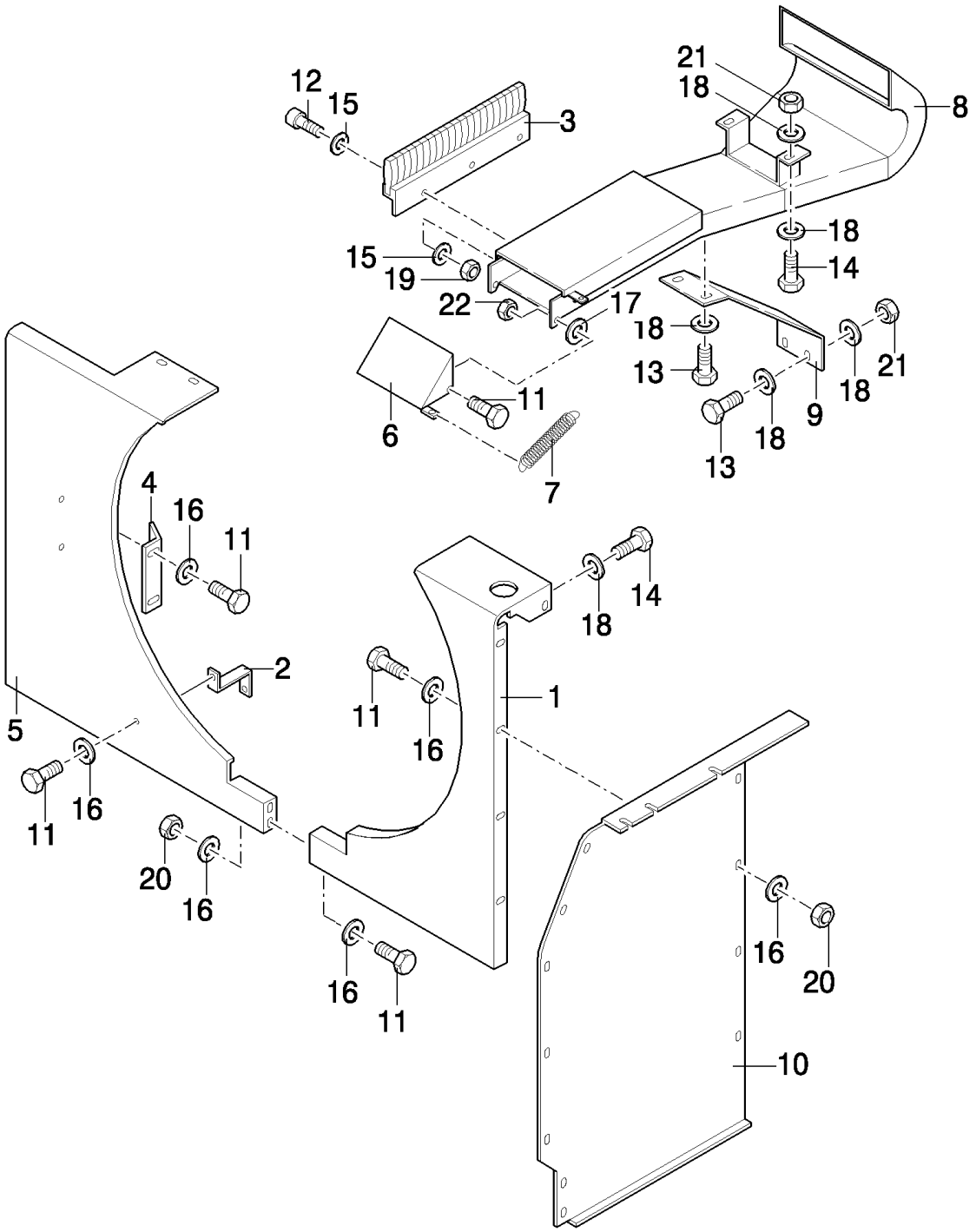

ONLY VALID UNTIL --1032999 (TX62-64-65-66-68PLUS) AND UNTIL --1076999 (NOT TX68PLUS)

TX68 COMBINE - BASE UNIT

01.17(01) GUARDS FOR ROTARY SCREEN

ссылка	Номер детали	Кол-во	Описание
1	9850846	1	SHIELD, , FOR TX66-68 ONLY
1	9818574	1	SHIELD, , FOR TX62-64-65 ONLY
2	84022190	1	SUPPORT,
3	9502965	1	BRUSH,
4	84000078	1	BRACKET, , FOR TX66-68 ONLY
4	84000044	1	BRACKET, , FOR TX62-64-65 ONLY
5	9850847	1	SHIELD, , FOR TX66-68 ONLY
5	89818575	1	SHIELD, , FOR TX62-64-65 ONLY
6	84000949	1	COVER,
7	180033	1	SPRING,
8	84000950	1	DUCT, AIR, , FOR TX66-68 ONLY
8	84011639	1	DUCT, AIR, , FOR TX62-64-65 ONLY
9	84005967	1	BRACKET, , FOR TX66-68 ONLY
9	84011640	1	BRACKET, , FOR TX62-64-65 ONLY
10	9850844	1	PLATE, COVER, , FOR TX66-68 ONLY
10	89814273	1	PLATE, COVER, , FOR TX62-64-65 ONLY
11	80120099	11	BOLT, Hex, M6 x 16, 8.8,
12	86511824	3	SCREW, Cross Pan Hd, M4 x 20, M4x20
14	120104	1	SCREW, Hex, M8 x 20, 8.8,
15	322355	6	WASHER, Belleville, M4,
16	412649	15	WASHER, SPRING, Belleville, M6,
17	140015	2	WASHER, 6MM
18	322358	11	WASHER, SPRING, Belleville, M8,
19	100012	6	NUT, M4, Cl 8,
20	15896221	6	NUT, M6, Cl 10,
21	9706690	4	NUT, M8, Cl 8,
22	353308	2	NUT, M6 x 1, Cl 8,
13	16043224	6	BOLT, Hex, M8 x 16, 8.8, Full Thd,

ONLY VALID UNTIL --1032999 (TX62-64-65-66-68PLUS) AND UNTIL --1076999 (NOT TX68PLUS)

01.17A(01) ROTARY SCREEN : BRUSH

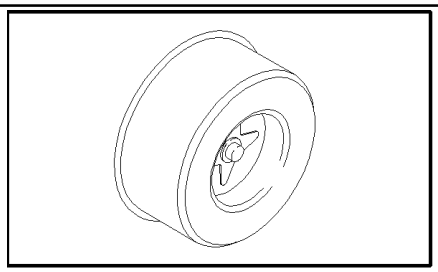

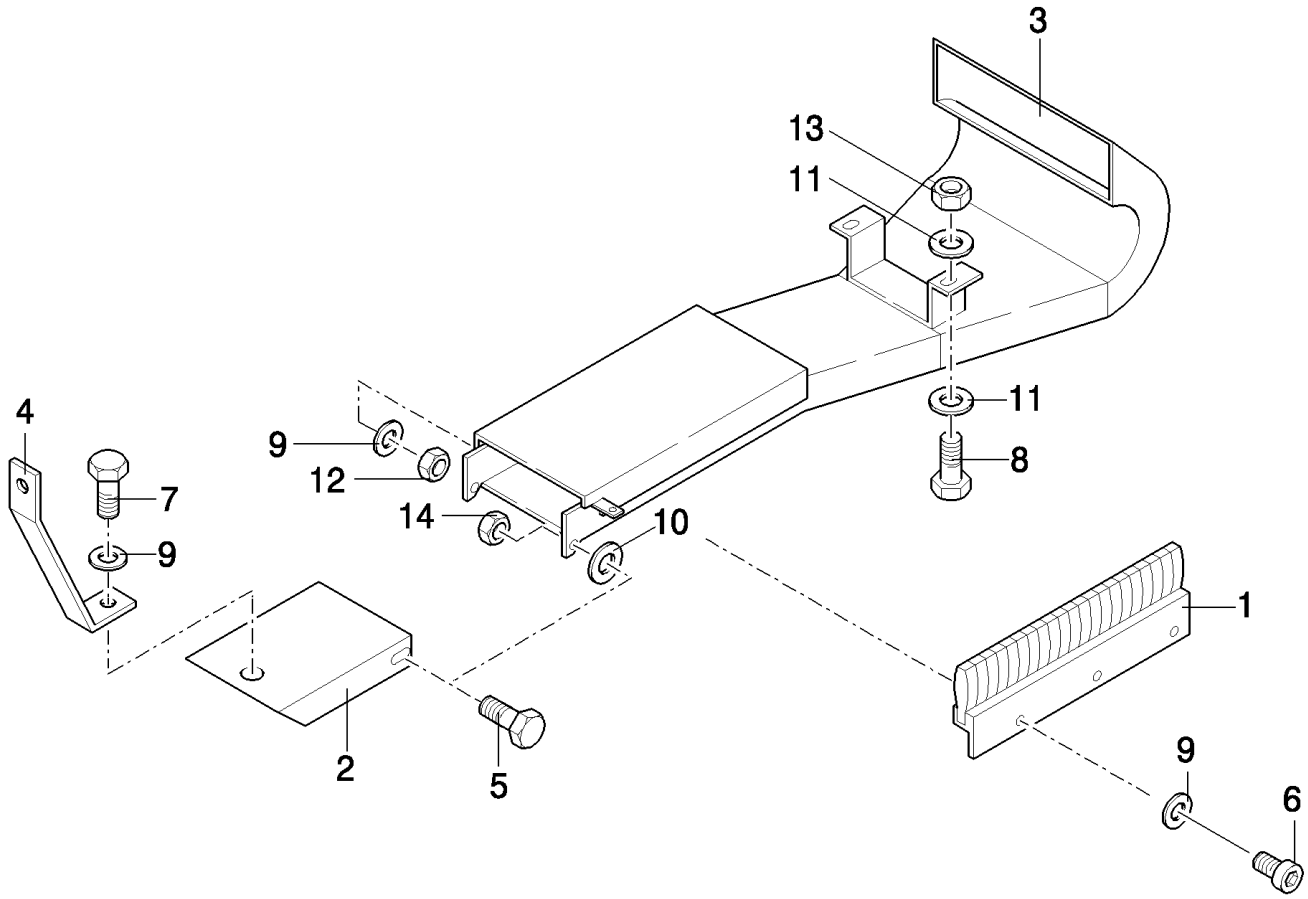

ONLY VALID FROM --1033001 (TX62-64-65-66-68PLUS) AND FROM --1077001 (NOT TX68PLUS)

TX68 COMBINE - BASE UNIT

01.17A(01) ROTARY SCREEN : BRUSH

ссылка	Номер детали	Кол-во	Описание
1	9502965	1	BRUSH, , FOR TX66-67-68 ONLY, BSN C315
1	84818406	1	BRUSH, , FOR TX66-67-68 ONLY, ASN D316
1	84012997	1	BRUSH, , FOR TX62-63-64-65 ONLY
2	84037288	1	COVER, , FOR TX68PLUS ONLY, FOR TX62-63-64-65-68 ONLY
2	84037161	1	COVER, , FOR TX67 ONLY
2	84031212	1	COVER, , NOT FOR TX68PLUS, FOR TX66-68 ONLY
3	84041309	1	DUCT, AIR, , FOR TX68PLUS ONLY
3	84026879	1	DUCT, AIR, , FOR TX67 ONLY
3	84017672	1	DUCT, AIR, , FOR TX66-68 ONLY, NOT FOR TX68PLUS
3	84037284	1	DUCT, AIR, , FOR TX62-63-64-65 ONLY
4	84041308	1	SUPPORT, , FOR TX68PLUS ONLY
4	84037134	1	SUPPORT, , FOR TX67 ONLY
4	84031093	1	BRACKET, , NOT FOR TX68PLUS, FOR TX66-68 ONLY
4	84037289	1	BRACKET, , FOR TX62-63-64-65 ONLY
5	80120099	2	BOLT, Hex, M6 x 16, 8.8,
6	86511824	3	SCREW, Cross Pan Hd, M4 x 20, M4x20
8	120104	2	SCREW, Hex, M8 x 20, 8.8,
9	322355	4	WASHER, Belleville, M4,
10	140015	1	WASHER, 6MM
11	322358	4	WASHER, SPRING, Belleville, M8,
12	100012	1	NUT, M4, Cl 8,
13	9706690	1	NUT, M8, Cl 8,
14	353308	1	NUT, M6 x 1, Cl 8,
7	16043224	1	BOLT, Hex, M8 x 16, 8.8, Full Thd,

ONLY VALID FROM --1033001 (TX62-64-65-66-68PLUS) AND FROM --1077001 (NOT TX68PLUS)

01.18(01) ROTARY SCREEN

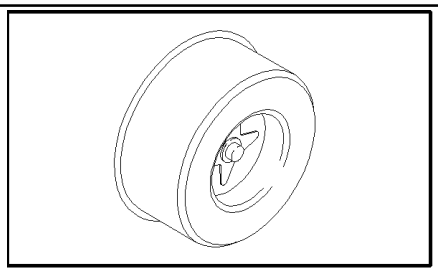

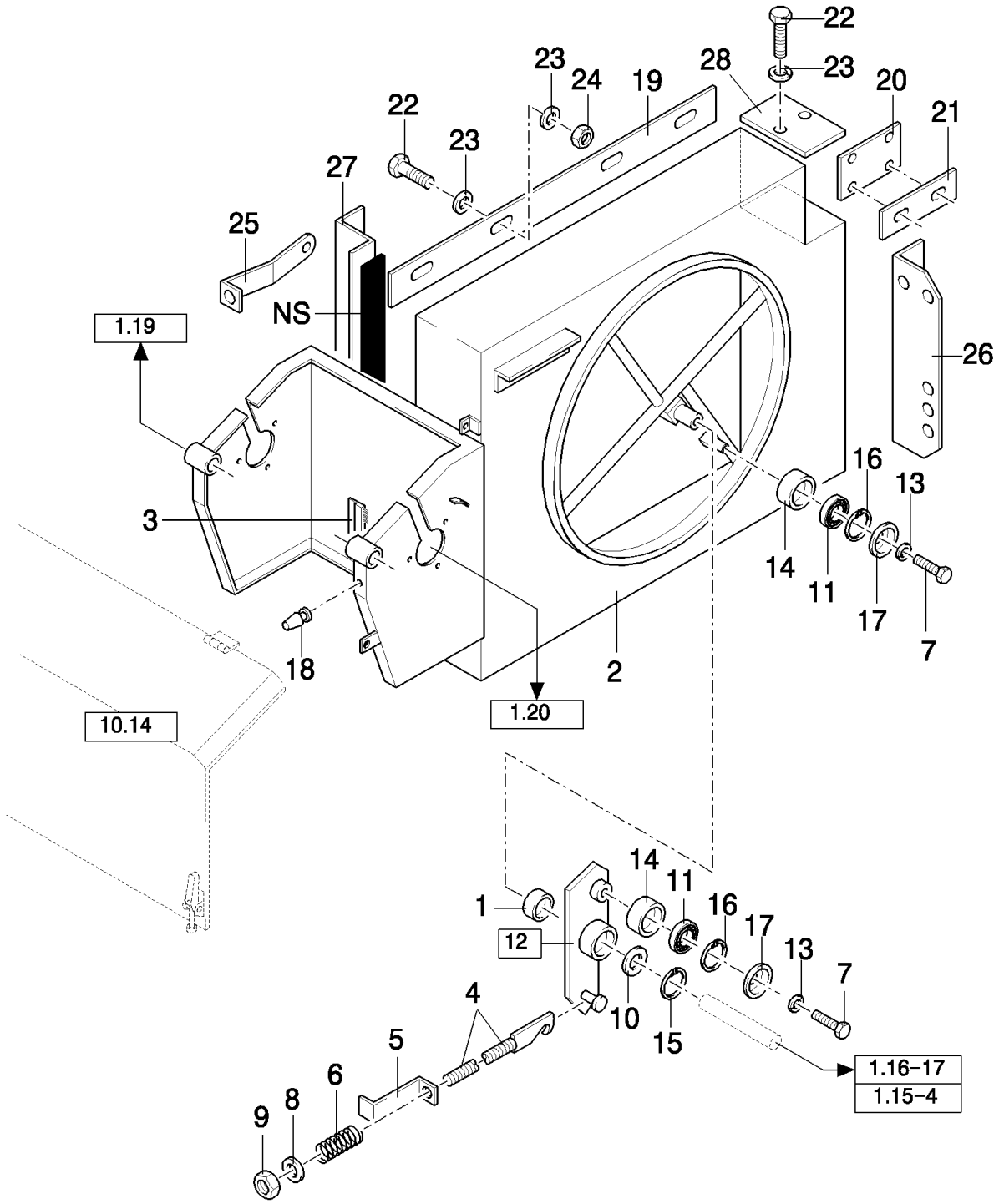

ONLY VALID UNTIL --1032999 (TX62-64-65-66-68PLUS) AND UNTIL --1076999 (NOT TX68PLUS)

TX68 COMBINE - BASE UNIT

01.18(01) ROTARY SCREEN

ссылка	Номер детали	Кол-во	Описание
1	9503683	1	SLEEVE,
2	9850579	1	SUPPORT, , FOR TX66-68 ONLY
2	9837587	1	SUPPORT, , FOR TX62-64-65 ONLY
3	923045	2	BRUSH, , FOR TX66-68 ONLY
3	923045	1	BRUSH, , FOR TX62-64-65 ONLY
3	9818383	1	BRUSH, , FOR TX62-64-65 ONLY
4	84004931	1	ROD, ADJUSTMENT, , FOR TX66-68 ONLY
5	84004932	1	INDICATOR, , FOR TX66-68 ONLY
6	385307	1	SPRING, , FOR TX66-68 ONLY
7	43138	AR	SCREW, Hex, M10 x 20, 8.8, Full Thd, , FOR TX66-68 ONLY
8	378245	1	WASHER, M12, 13MM, FOR TX66-68 ONLY
9	100038	1	NUT, M12 x 1.75, Cl 8, , FOR TX66-68 ONLY
10	354133	1	WASHER, 50.5MM, FOR TX66-68 ONLY
11	25953	2	BEARING, BALL, , FOR TX66-68 ONLY
12	9850513	1	LEVER, (1), FOR TX66-68 ONLY
13	140045	AR	WASHER, SPRING, Belleville, M10, , FOR TX66-68 ONLY
14	9850523	2	WHEEL, IDLER, , FOR TX66-68 ONLY
15	370007	1	RING, SNAP, M45, Ext, , FOR TX66-68 ONLY
16	370018	2	RING, SNAP, , FOR TX66-68 ONLY
17	9850522	2	COVER, , FOR TX66-68 ONLY
18	336455	2	PLUG,
19	84007304	1	PLATE, COVER, , FOR TX66 ONLY
20	84007303	1	PLATE, COVER, , FOR TX66 ONLY
21	84007301	1	BRACKET, , FOR TX66 ONLY
22	80120099	AR	BOLT, Hex, M6 x 16, 8.8, , FOR TX66 ONLY
23	322357	AR	WASHER, SPRING, Belleville, M6, , FOR TX66 ONLY
24	15896221	AR	NUT, M6, Cl 10, , FOR TX66 ONLY
25	89839060	1	SUPPORT, , FOR TX62-64-65 ONLY
26	9501004	1	PLATE, , FOR TX62-64-65 ONLY
27	754386	1	SUPPORT, , FOR TX62-64-65 ONLY
28	84021106	1	PLATE, COVER, , FOR TX62 ONLY

ONLY VALID UNTIL --1032999 (TX62-64-65-66-68PLUS) AND UNTIL --1076999 (NOT TX68PLUS)

01.19(01) ROTARY SCREEN DRIVE

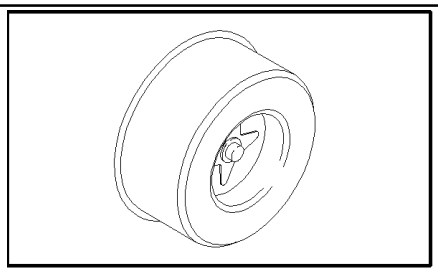

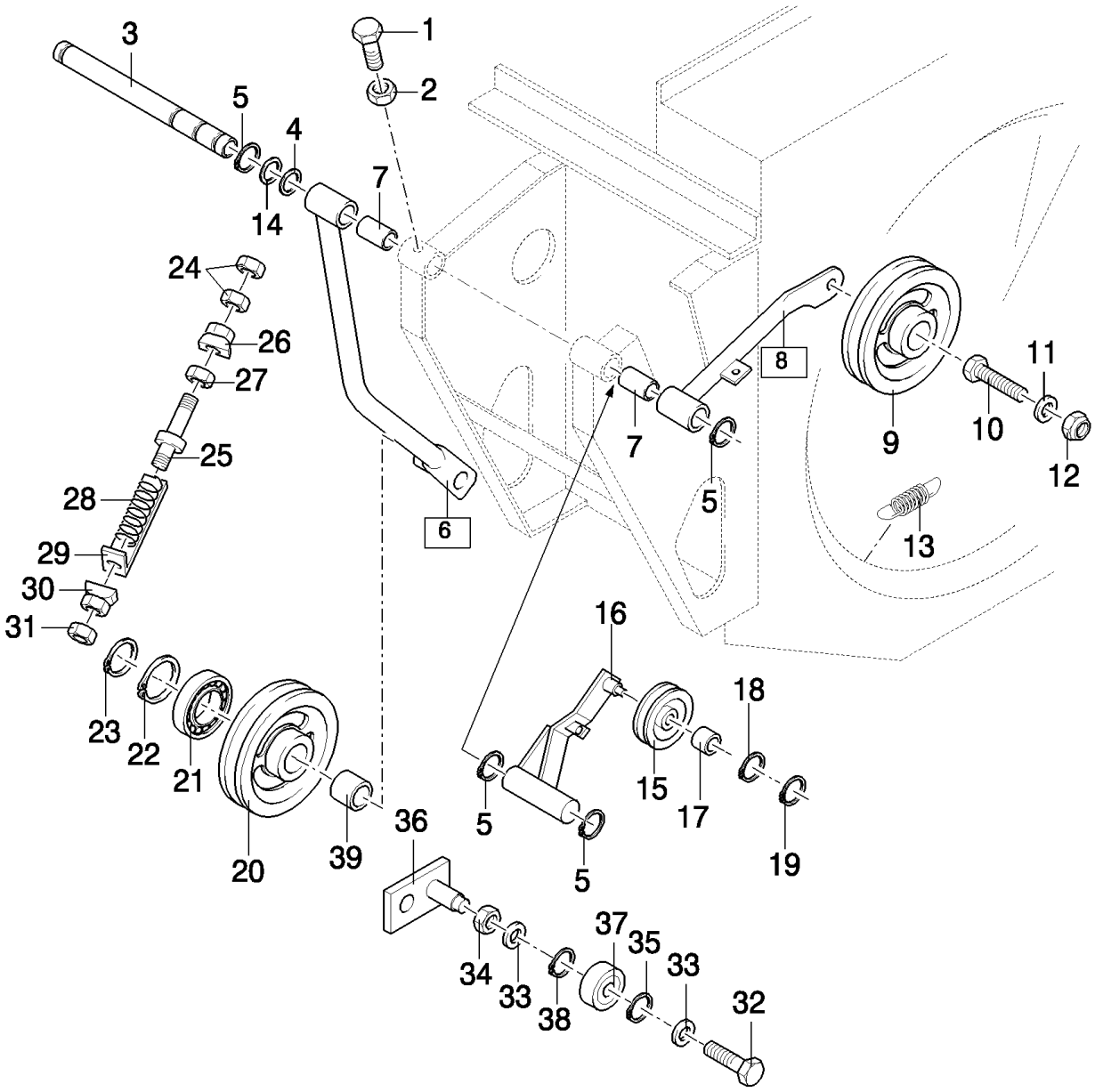

ONLY VALID UNTIL --1032999 (TX62-64-65-66-68PLUS) AND UNTIL --1076999 (NOT TX68PLUS)

TX68 COMBINE - BASE UNIT

01.19(01) ROTARY SCREEN DRIVE

ссылка	Номер детали	Кол-во	Описание
1	120242	1	SET SCREW, Hex Soc, M6 x 10, Cup Pt,
2	15896221	1	NUT, M6, Cl 10,
3	9850544	1	SHAFT, , FOR TX66-68 ONLY
3	84000707	1	SHAFT, , FOR TX62-64-65 ONLY
4	443434	AR	WASHER, 20MM
5	370024	2	RING, SNAP, M20, Ext,
6	84000221	1	ARM, (7), FOR TX66-68 ONLY, -C5620
6	84019386	1	ARM, (7), FOR TX66-68 ONLY, D5620-
6	9501603	1	ARM, (7), FOR TX62-64-65 ONLY
7	382974	2	BUSHING,
8	9850525	1	ARM, (7), FOR TX66-68 ONLY
9	309628	1	PULLEY, , FOR TX66-68 ONLY
10	9706693	1	BOLT, Hex, M12 x 60, 8.8, , FOR TX66-68 ONLY
11	378245	1	WASHER, M12, 13MM, FOR TX66-68 ONLY
12	100038	1	NUT, M12 x 1.75, Cl 8, , FOR TX66-68 ONLY
13	9835280	1	SPRING,
14	9508326	1	WASHER, , FOR TX62-64-65 ONLY
15	922046	1	PULLEY, , FOR TX62-64-65 ONLY
16	9817611	1	ARM, , FOR TX62-64-65 ONLY
17	727874	1	BEARING ASSY, , FOR TX62-64-65 ONLY
18	300647	1	RING, SNAP, M47, Int, , FOR TX62-64-65 ONLY
19	370016	1	RING, SNAP, M17, Ext, , FOR TX62-64-65 ONLY
20	84000211	1	IDLER, (DOUBLE), FOR TX66-68 ONLY
20	753626	1	PULLEY, (SINGLE), FOR TX62-64-65 ONLY
21	362804	2	BEARING ASSY, , FOR TX66-68 ONLY
21	362804	1	BEARING ASSY, , FOR TX62-64-65 ONLY
22	300644	1	RING, SNAP, M40, Int,
23	370016	1	RING, SNAP, M17, Ext,
24	100016	AR	NUT, M10, Cl 8,
25	754128	AR	ROD, ADJUSTMENT,
26	754131	AR	GUIDE,
27	86514720	AR	NUT, LOCK, M10
28	9817602	AR	SPRING,
29	754381	AR	INDICATOR, , FOR TX68 ONLY
29	913108	AR	INDICATOR, , FOR TX62-64-65-66 ONLY
30	442398	AR	GUIDE,
31	100037	AR	NUT, M10 x 1.5, Cl 8,
32	120073	1	BOLT, Hex, M10 x 80, 8.8, , FOR TX62-64-65 ONLY
33	140045	2	WASHER, SPRING, Belleville, M10, , FOR TX62-64-65 ONLY
34	100016	1	NUT, M10, Cl 8, , FOR TX62-64-65 ONLY
35	300645	1	RING, SNAP, M42, Int, , FOR TX62-64-65 ONLY
36	89835766	1	SUPPORT, , FOR TX62-64-65 ONLY
37	9835770	1	WHEEL, IDLER, , FOR TX62-64-65 ONLY
38	300313	1	BEARING ASSY, , FOR TX62-64-65 ONLY

ONLY VALID UNTIL --1032999 (TX62-64-65-66-68PLUS) AND UNTIL --1076999 (NOT TX68PLUS)

ссылка	Номер детали	Кол-во	Описание
39	326893	1	BUSHING, , FOR TX66-68 ONLY

ONLY VALID UNTIL --1032999 (TX62-64-65-66-68PLUS) AND UNTIL --1076999 (NOT TX68PLUS)

01.20(01) ROTARY SCREEN DRIVE

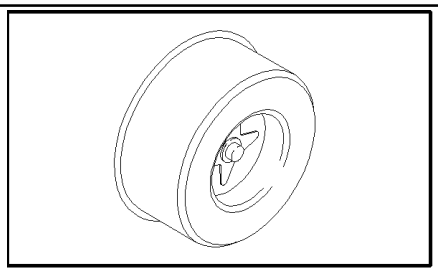

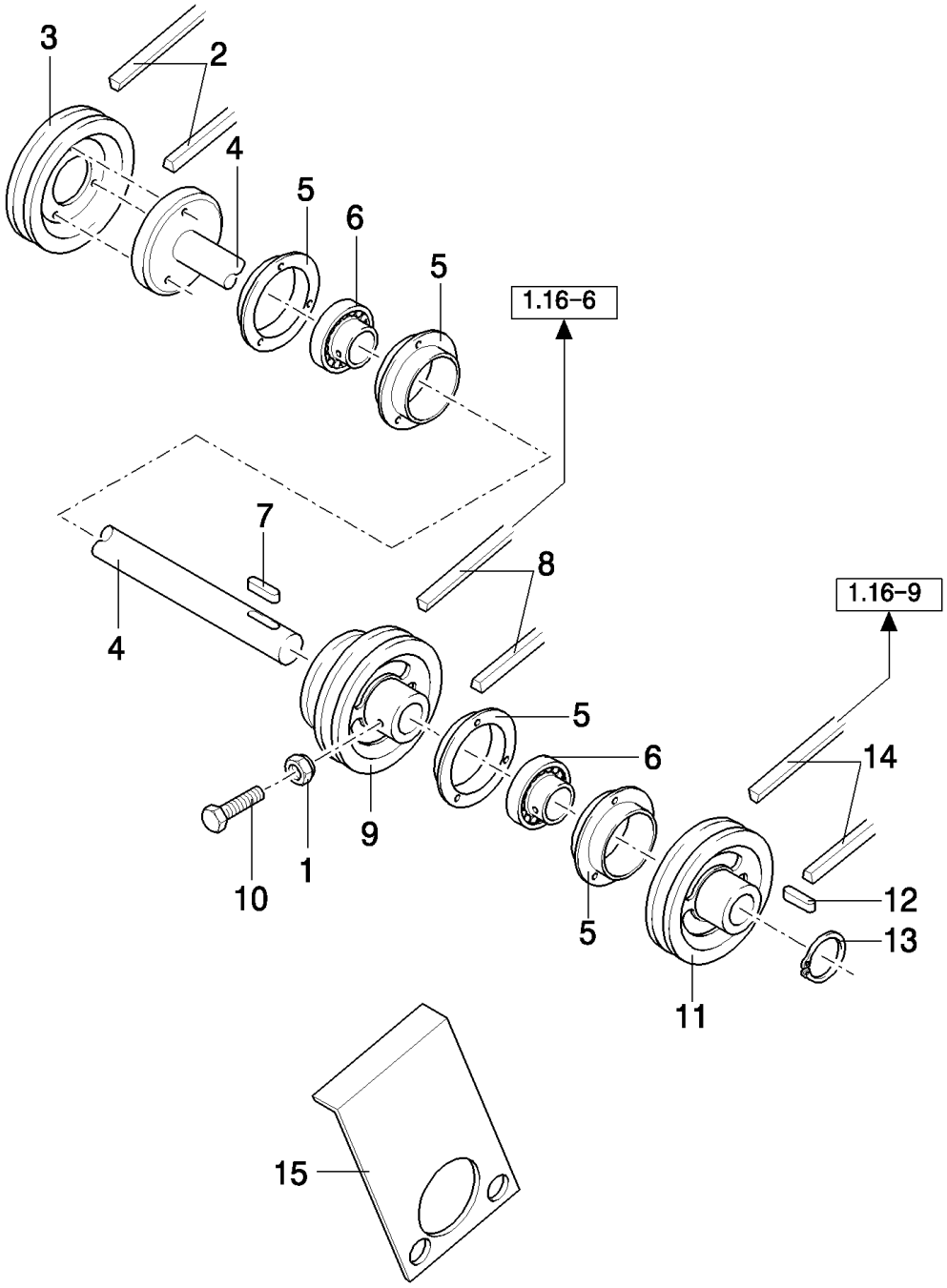

ONLY VALID UNTIL --1032999 (TX62-64-65-66-68PLUS) AND UNTIL --1076999 (NOT TX68PLUS)

TX68 COMBINE - BASE UNIT

01.20(01) ROTARY SCREEN DRIVE

ссылка	Номер детали	Кол-во	Описание
1	100037	1	NUT, M10 x 1.5, Cl 8,
2	84007307	1	BELT, TRANSMISSION, , FOR TX66 ONLY
2	84000838	1	SET OF BELTS, , FOR TX68 ONLY
2	9514311	1	BELT, TRANSMISSION, , FOR TX64-65 ONLY
2	9833619	1	BELT, TRANSMISSION, , FOR TX62 ONLY
3	9850330	1	PULLEY, , FOR TX66-68 ONLY
3	89833534	1	PULLEY, , FOR TX64-65 ONLY
3	89833532	1	PULLEY, , FOR TX62 ONLY
4	9850545	1	SHAFT, , FOR TX66-68 ONLY
4	84018508	1	SHAFT, , FOR TX62-64-65 ONLY
5	36403	4	FLANGE,
6	322360	2	BEARING, BALL,
7	170012	1	KEY,
8	9850261	1	BELT, TRANSMISSION, , FOR TX66-68 ONLY
8	9833619	1	BELT, TRANSMISSION, , FOR TX62 ONLY, FOR TX64-65 GERMANY - ITALY ONLY
8	9514311	1	BELT, TRANSMISSION, , FOR TX64-65 ONLY
9	9850051	1	PULLEY, , FOR TX66-68 ONLY
9	84014474	1	PULLEY, , FOR TX64-65 ONLY
9	84015441	1	PULLEY, , FOR TX64-65 GERMANY - ITALY ONLY, FOR TX62 ONLY
10	120070	1	BOLT, Hex, M10 x 60, 8.8,
11	388338	1	PULLEY, , FOR TX66-68 ONLY
11	9835330	1	PULLEY, , FOR TX62-64-65 ONLY
12	170005	1	KEY,
13	370003	1	RING, SNAP, M30, Ext, , FOR TX66-68 ONLY
13	370002	1	RING, SNAP, M25, Ext, , FOR TX62-64-65 ONLY
14	9818830	1	BELT, TRANSMISSION, HA, FOR TX66-68 ONLY
14	9835743	1	BELT, TRANSMISSION, HA, FOR TX62-64-65 ONLY
15	9501007	1	SUPPORT, , FOR TX62-64-65 ONLY

ONLY VALID UNTIL --1032999 (TX62-64-65-66-68PLUS) AND UNTIL --1076999 (NOT TX68PLUS)

01.20A(01) ROTARY SCREEN

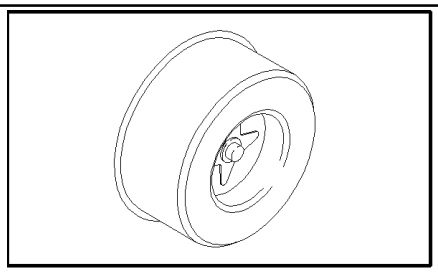

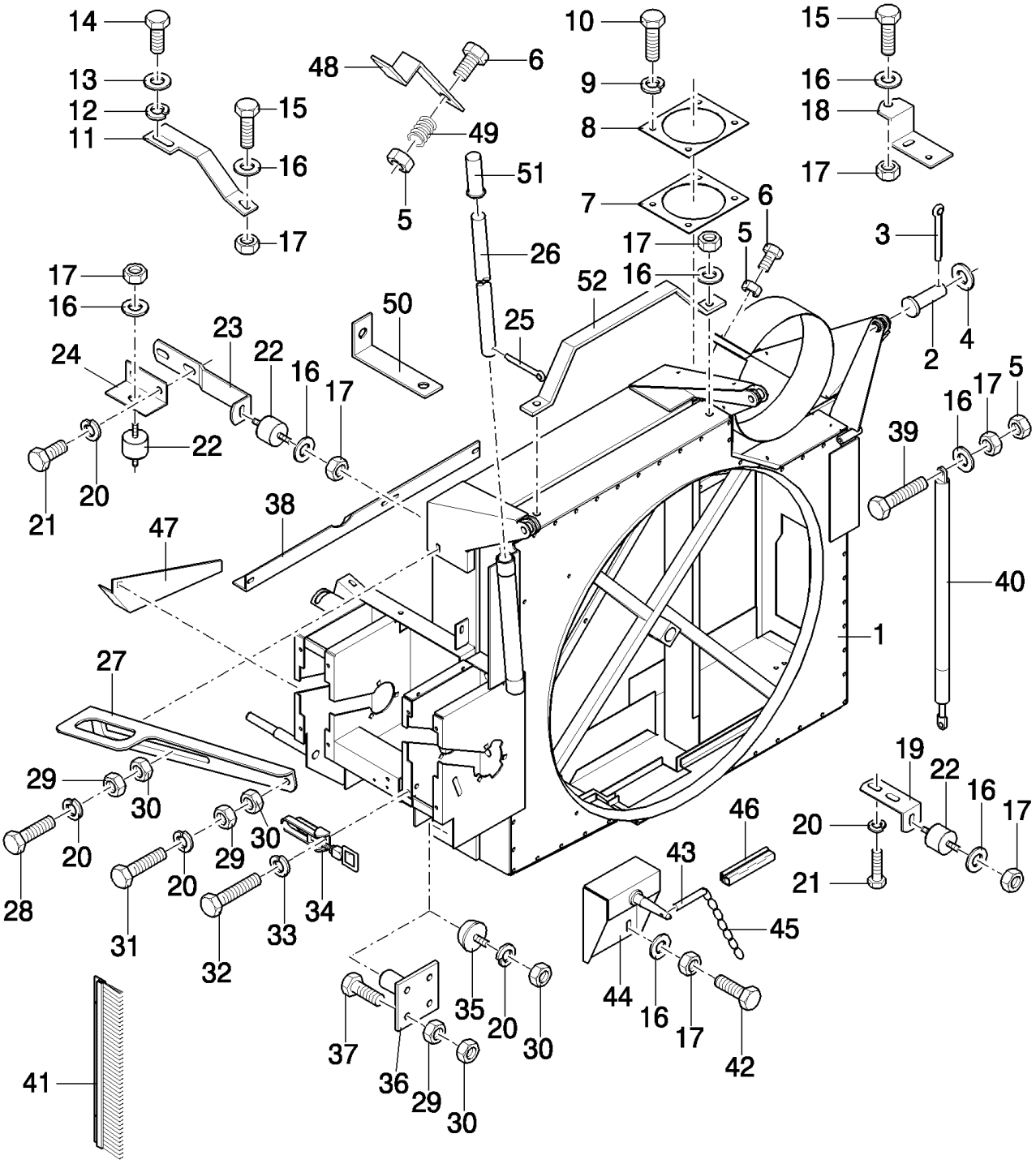

ONLY VALID FROM --1033001 (TX62-63-64-65-66-68PLUS) AND FROM --1077001 (NOT TX68PLUS)

TX68 COMBINE - BASE UNIT

01.20A(01) ROTARY SCREEN

ссылка	Номер детали	Кол-во	Описание
1	84036918	1	SUPPORT, , FOR TX67 ONLY, -C1032
1	84045637	1	SUPPORT, , NOT FOR TX68PLUS, D1033-
1	84039267	1	SUPPORT, , FOR TX68PLUS ONLY
2	9503184	3	PIN, CLEVIS, M16 x 50,
3	130007	3	PIN, SPLIT (COTTER), M4 x 25,
4	378246	3	WASHER, 16MM
5	86629542	2	NUT, LOCK, M8 x 1.25, Cl 8,
6	43129	2	BOLT, Hex, M8 x 40, 8.8,
7	84012218	1	CANVAS, , NOT FOR TX68PLUS, -C1169
7	84432816	1	CANVAS, , NOT FOR TX68PLUS, D1170-
7	84038985	1	CANVAS, , FOR TX68PLUS ONLY
8	84012212	1	PLATE, COVER, , NOT FOR TX68PLUS
8	84038984	1	PLATE, COVER, , FOR TX68PLUS ONLY
9	412649	4	WASHER, SPRING, Belleville, M6,
10	80120099	4	BOLT, Hex, M6 x 16, 8.8,
11	84032206	1	BRACKET,
12	140046	1	WASHER, Belleville, M12,
13	378245	1	WASHER, M12,
14	9706729	1	BOLT, Hex, 7/16"-14 x 1", G5, Full Thd,
15	120104	AR	SCREW, Hex, M8 x 20, 8.8,
16	322358	AR	WASHER, SPRING, Belleville, M8,
17	9706690	AR	NUT, M8, Cl 8,
18	84036850	1	SUPPORT,
19	84026984	2	BRACKET,
20	140045	AR	WASHER, SPRING, Belleville, M10,
21	300383	AR	BOLT, Hex, M10 x 16, 8.8, Full Thd,
22	393802	4	SHOCK ABSORBER,
23	84005925	1	BRACKET,
24	84005927	1	SUPPORT,
25	130012	1	PIN, SPLIT (COTTER), M5 x 50,
26	84056719	1	TUBE,
27	84032146	1	SUPPORT,
28	43140	1	BOLT, Hex, M10 x 30, 8.8, Full Thd,
29	100016	1	NUT, M10, Cl 8,
30	100037	1	NUT, M10 x 1.5, Cl 8,
31	120070	1	BOLT, Hex, M10 x 60, 8.8,
32	86511824	2	SCREW, Cross Pan Hd, M4 x 20, M4x16
33	322355	2	WASHER, Belleville, M4,
34	9513188	1	FASTENER,
35	190029	1	INSULATOR BLOCK,
36	84031215	1	PIN,
37	43138	2	SCREW, Hex, M10 x 20, 8.8, Full Thd,
38	84032205	1	SUPPORT,
39	43128	2	BOLT, Hex, M8 x 30, 8.8,

ONLY VALID FROM --1033001 (TX62-63-64-65-66-68PLUS) AND FROM --1077001 (NOT TX68PLUS)

TX68 COMBINE - BASE UNIT

01.20A(01) ROTARY SCREEN

ссылка	Номер детали	Кол-во	Описание
40	84032175	2	SHOCK ABSORBER,
41	923045	1	BRUSH,
42	86507486	1	BOLT, CARRIAGE, Short NK, M8 x 20, Cl8.8, Full Thd,
43	9832679	1	PIN, SPLIT (COTTER),
44	84031738	1	SUPPORT,
45	539289	1	CHAIN,
46	84056063	AR	SEAL PROTECTION,
47	84017615	1	SUPPORT,
48	84037175	1	PLATE, COVER,
49	84007840	1	SPRING,
50	84041674	1	SUPPORT,
51	84036813	1	BRACKET,
52	84057445	1	BRACKET,

ONLY VALID FROM --1033001 (TX62-63-64-65-66-68PLUS) AND FROM --1077001 (NOT TX68PLUS)

01.20B(01) ROTARY SCREEN DRIVE - IDLERS AND WIPERS

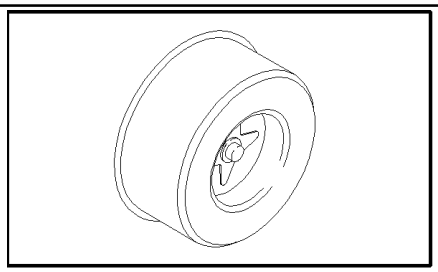

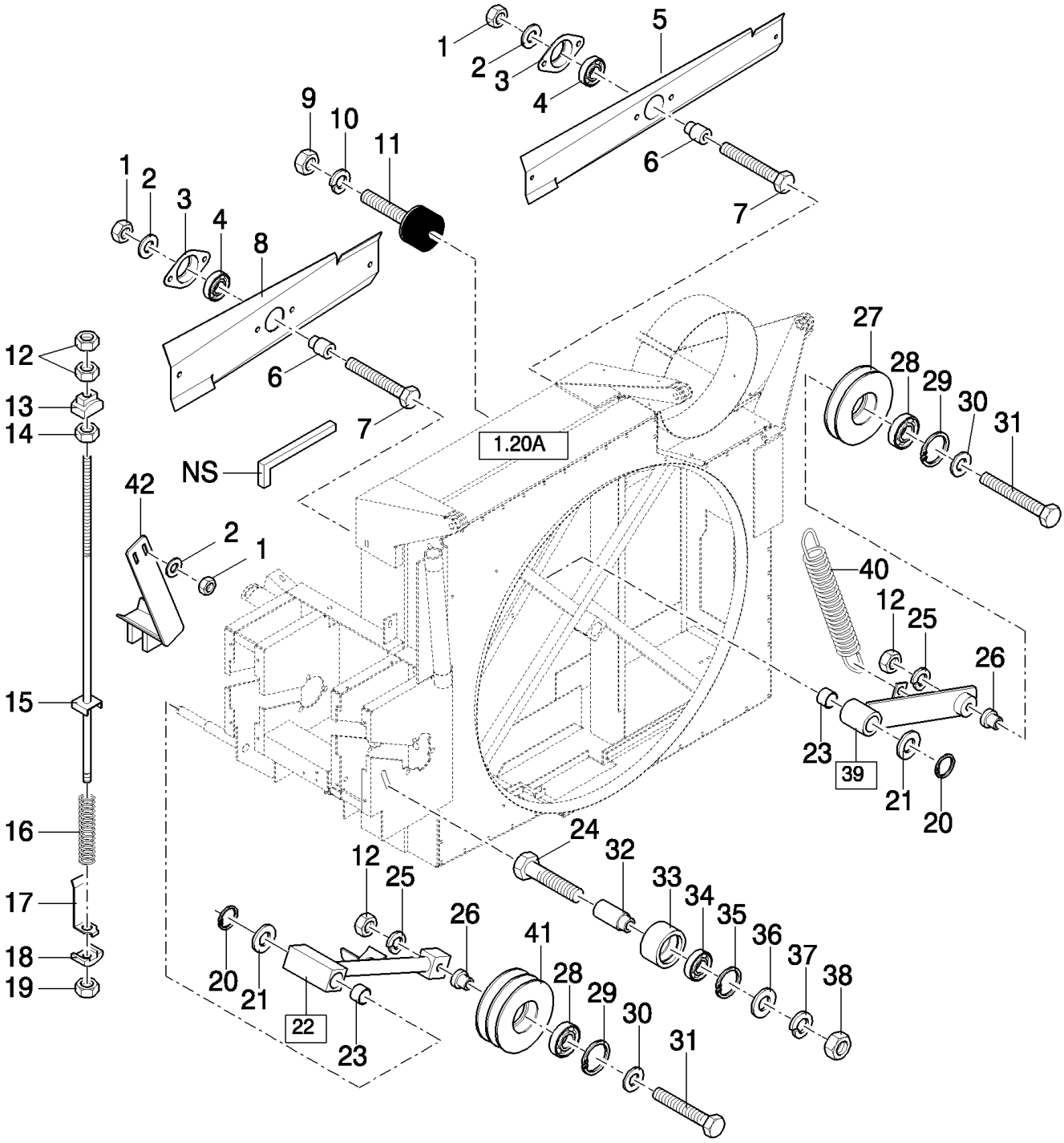

ONLY VALID FROM --1033001 (TX62-63-64-65-66-68PLUS) AND FROM --1077001 (NOT TX68PLUS)

TX68 COMBINE - BASE UNIT

01.20B(01) ROTARY SCREEN DRIVE - IDLERS AND WIPERS

ссылка	Номер детали	Кол-во	Описание
1	9706690	AR	NUT, M8, Cl 8,
2	322358	AR	WASHER, SPRING, Belleville, M8,
3	84017501	2	HOUSING, BEARING,
4	362804	2	BEARING ASSY,
5	84041918	1	BLADE,
6	84026983	2	SHAFT,
7	43130	2	BOLT, Hex, M8 x 50, 8.8,
8	84017500	1	BLADE,
9	15896221	4	NUT, M6, Cl 10,
10	412649	4	WASHER, SPRING, Belleville, M6,
11	84041274	4	DAMPER,
12	100016	AR	NUT, M10, Cl 8,
13	754131	1	GUIDE,
14	86514720	1	NUT, LOCK, M10
15	84041835	1	ROD, ADJUSTMENT,
16	9817602	1	SPRING,
17	913108	1	INDICATOR,
18	442398	1	GUIDE,
19	100037	1	NUT, M10 x 1.5, Cl 8,
20	370024	2	RING, SNAP, M20, Ext,
21	443434	AR	WASHER,
22	84041844	1	LEVER, (23), NOT FOR TX68PLUS
22	84042534	1	LEVER, (23), FOR TX68PLUS ONLY
23	382974	1	BUSHING,
24	300662	1	BOLT, CARRIAGE, Short NK, M12 x 80, Cl8.8,
25	140045	AR	WASHER, SPRING, Belleville, M10,
26	84041845	2	SHAFT,
27	922046	1	PULLEY,
28	727874	2	BEARING ASSY,
29	300647	2	RING, SNAP, M47, Int,
30	378244	2	WASHER, M10,
31	120071	2	BOLT, Hex, M10 x 65, 8.8,
32	84031094	1	BEARING, CAMSHAFT,
33	9835770	1	WHEEL, IDLER,
34	300313	1	BEARING ASSY,
35	300645	1	RING, SNAP, M42, Int,
36	140084	1	WASHER, 12MM
37	140046	1	WASHER, Belleville, M12,
38	337475	1	NUT, M12, Cl 10,
39	84026979	1	LEVER, (23)
40	180039	1	SPRING,
41	922046	1	PULLEY, , NOT FOR TX68PLUS
41	84038853	1	PULLEY, , FOR TX68PLUS ONLY
42	84071672	1	GUIDE, , D1094-

ONLY VALID FROM --1033001 (TX62-63-64-65-66-68PLUS) AND FROM --1077001 (NOT TX68PLUS)

01.20D(01) ROTARY SCREEN DRIVE

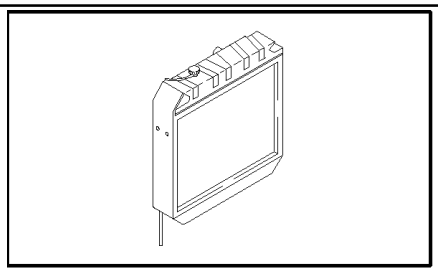

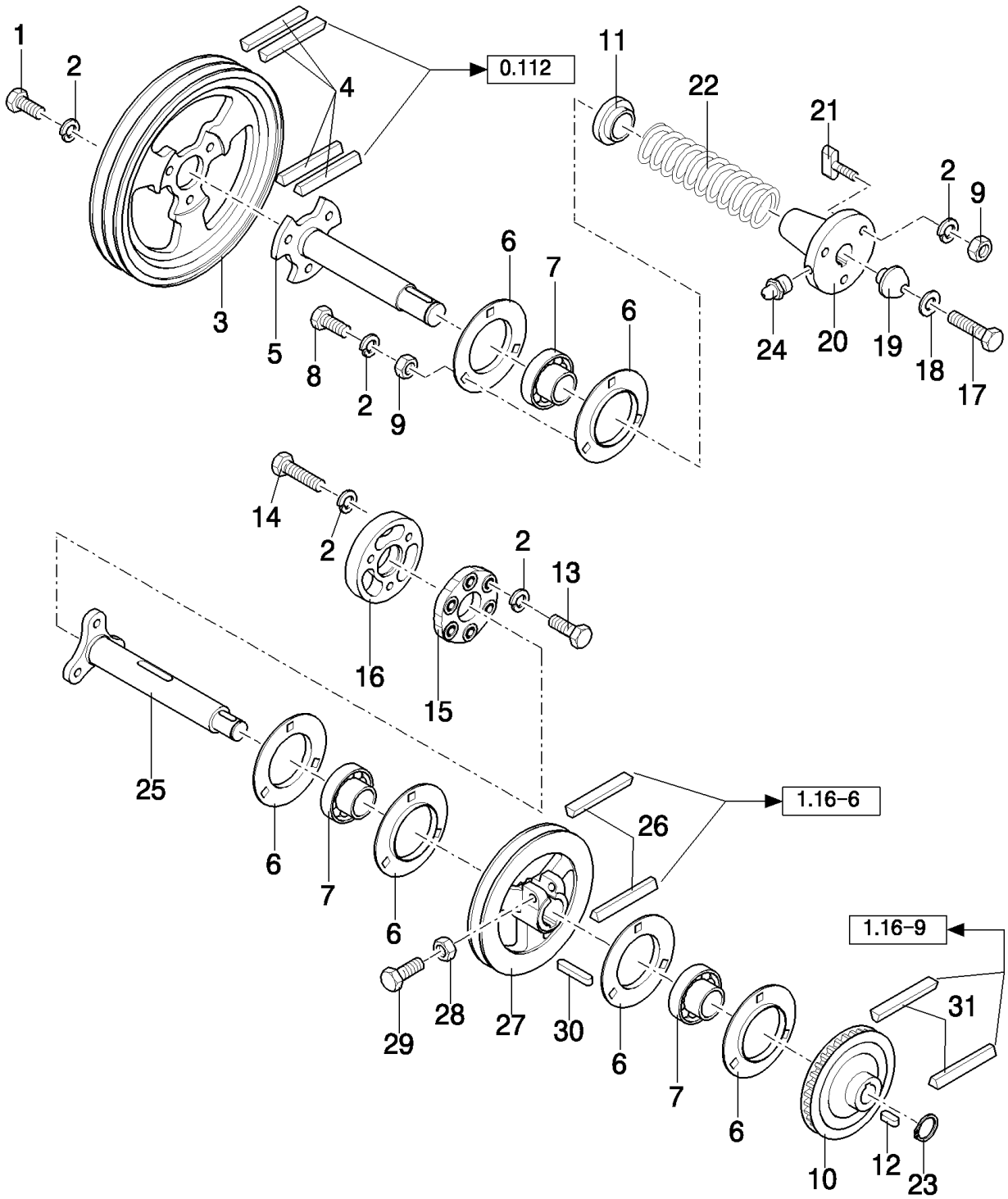

ONLY VALID FROM --1033001 (TX62-63-64-65-66-68PLUS) AND FROM --1077001 (NOT TX68PLUS)

TX68 COMBINE - BASE UNIT

01.20D(01) ROTARY SCREEN DRIVE

ссылка	Номер детали	Кол-во	Описание
1	43138	3	SCREW, Hex, M10 x 20, 8.8, Full Thd,
2	140045	AR	WASHER, SPRING, Belleville, M10,
3	84039567	1	PULLEY, , NOT FOR TX68PLUS
3	84042884	1	PULLEY, , FOR TX68PLUS ONLY
4	84041518	1	BELT, TRANSMISSION, , NOT FOR TX68PLUS
4	84037964	1	SET OF BELTS, , FOR TX68PLUS ONLY
5	84043963	1	SHAFT, , FOR TX68PLUS ONLY
5	84043045	1	SHAFT, , NOT FOR TX68PLUS
6	36403	8	FLANGE,
7	322360	4	BEARING, BALL,
8	V43471	AR	BOLT, M10x20
9	100016	AR	NUT, M10, Cl 8,
10	9835330	1	PULLEY,
11	84043047	1	RING,
12	170005	1	KEY,
13	43139	AR	SCREW, Hex, M10 x 25, 8.8, Full Thd, M10x35
14	120112	AR	BOLT, Hex, M10 x 40, 8.8, Full Thd,
15	9811514	1	JOINT, UNIVERSAL,
16	84026817	1	HUB,
17	300443	1	SCREW, M10x35
18	140028	1	WASHER, M10,
19	84026815	1	REGULATING SYSTEM,
20	84056020	1	HUB,
21	84031014	3	REGULATING SYSTEM,
22	84026767	1	SPRING,
23	370002	1	RING, SNAP, M25, Ext,
24	321204	1	NIPPLE, LUBE, M6 x 1, 16mm lg,
25	84043042	1	SHAFT,
26	9817454	1	BELT, TRANSMISSION, , FOR TX62-64-65-66-67-68 ONLY, NOT FOR TX65PLUS AND TX68PLUS
26	9817959	1	BELT, TRANSMISSION, , FOR TX63-65-68 ONLY, FOR TX65PLUS AND TX68PLUS ONLY
27	84022616	1	PULLEY, , FOR TX62-64-65-66-67-68 ONLY, NOT FOR TX65PLUS AND TX68PLUS
27	84043009	1	PULLEY, , FOR TX63-65-68 ONLY, FOR TX65PLUS AND TX68PLUS ONLY
28	120070	1	BOLT, Hex, M10 x 60, 8.8,
29	100037	1	NUT, M10 x 1.5, Cl 8,
30	170012	1	KEY,
31	84022715	1	BELT, TRANSMISSION,

ONLY VALID FROM --1033001 (TX62-63-64-65-66-68PLUS) AND FROM --1077001 (NOT TX68PLUS)

01.20E(01) RADIATOR, INTERCOOLER AND RELATED PARTS

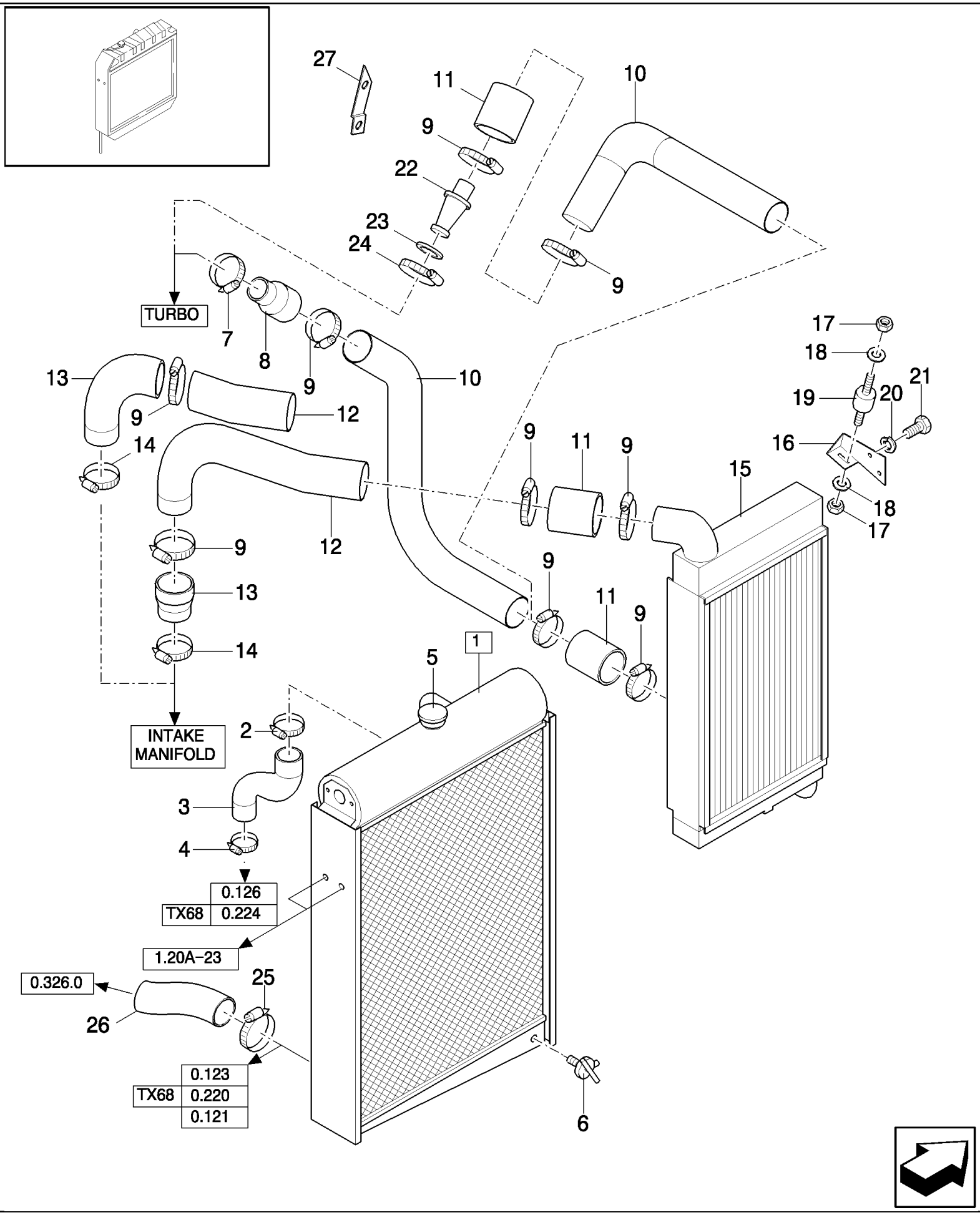

ONLY VALID FROM --1033001 (TX62-63-64-65-66) AND FROM --1077001 (NOT TX68PLUS)

TX68 COMBINE - BASE UNIT

01.20E(01) RADIATOR, INTERCOOLER AND RELATED PARTS

ссылка	Номер детали	Кол-во	Описание
1	84026043	1	RADIATOR, (5,6)
2	556701	1	CLAMP,
3	84026924	1	ELBOW, , FOR TX67 ONLY, -C1032
3	84045771	1	ELBOW, , D1033-
4	360747	1	CLAMP,
5	84043434	1	CAP, RADIATOR,
6	441031	1	DRAINCOCK/TAP, SUPPLY,
7	84026994	1	CLAMP, , FOR TX63-64-65-66-67-68 ONLY, -C1245
7	84043693	1	CLAMP, , FOR TX62 ONLY, -C1245
8	84026923	1	HOSE, , FOR TX63-64-65-66-67-68 ONLY, -C1245
8	84043091	1	HOSE, FLEXIBLE, , FOR TX62 ONLY, -C1245
9	84015284	6	CLAMP, , -C1237
9	84021019	6	CLAMP, , D1238-
10	84026927	1	TUBE, , -C1245
10	84097164	1	TUBE, , D1246-
11	84015286	2	TUBE, , -C1245
11	84015286	3	TUBE, , D1246-
12	84026926	1	TUBE, , -C1245
12	84097167	1	TUBE, , D1246-
13	84015210	1	HOSE, , -C1245
13	84440786	1	HOSE, , D1246-
14	84015283	1	CLAMP,
15	84026044	1	INTERCOOLER,
16	84031009	1	SUPPORT, RH
16	84031010	1	SUPPORT, LH
17	9706690	4	NUT, M8, Cl 8,
18	322358	4	WASHER, SPRING, Belleville, M8,
19	393802	2	SHOCK ABSORBER,
20	140045	4	WASHER, SPRING, Belleville, M10,
21	300383	4	BOLT, Hex, M10 x 16, 8.8, Full Thd,
22	84097162	1	TUBE, , D1246-
23	17284681	1	GASKET, , BSN F246321
23	84448024	1	O-RING, , D1322-
24	4800661	1	CLAMP, HOSE, , BSN F246321
24	84448034	1	STRAP, , D1322-
25	556701	2	CLAMP, , D1246-
26	84031641	2	HOSE, , D1246-
27	84446444	1	SUPPORT, , ASN D310

ONLY VALID FROM --1033001 (TX62-63-64-65-66) AND FROM --1077001 (NOT TX68PLUS)

01.20F(01) RADIATOR, INTERCOOLER AND RELATED PARTS - TX68PLUS

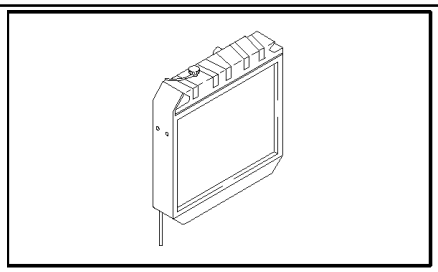

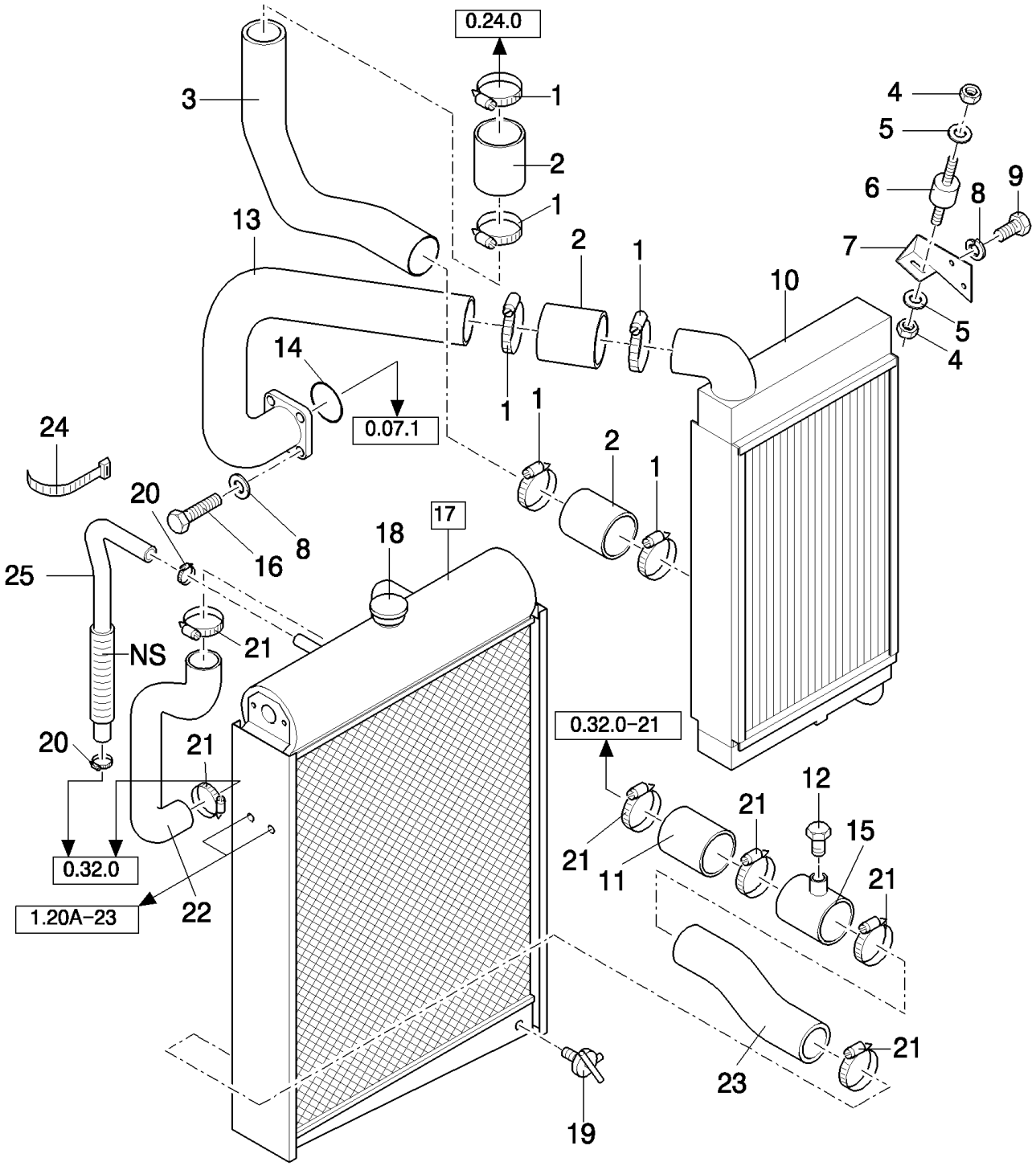

TX68 COMBINE - BASE UNIT

01.20F(01) RADIATOR, INTERCOOLER AND RELATED PARTS - TX68PLUS

ссылка	Номер детали	Кол-во	Описание
1	84015284	6	CLAMP, , -C1237
1	84021019	6	CLAMP, , D1238-
2	84015286	3	TUBE,
3	84037962	1	TUBE,
4	9706690	4	NUT, M8, Cl 8,
5	322358	4	WASHER, SPRING, Belleville, M8,
6	393802	2	SHOCK ABSORBER,
7	84031009	1	SUPPORT, RH
7	84031010	1	SUPPORT, LH
8	140045	8	WASHER, SPRING, Belleville, M10,
9	300383	4	BOLT, Hex, M10 x 16, 8.8, Full Thd,
10	84037840	1	INTERCOOLER,
11	89833673	1	HOSE,
12	80781	1	PLUG, Sq Hd, 3/8"-18,
13	84041758	1	TUBE,
14	455025	1	SEAL, -244, 70 Duro, 4.234" ID x .139" Thk,
15	84037870	1	TUBE,
16	11106231	4	BOLT, Hex, M10 x 25, 10.9, Full Thd,
17	84037790	1	RADIATOR, (18,19)
18	84043434	1	CAP, RADIATOR,
19	441031	1	DRAINCOCK/TAP, SUPPLY,
20	913888	2	CLAMP, HOSE,
21	556701	6	CLAMP,
22	84037966	1	ELBOW,
23	84037965	1	ELBOW,
24	396718	2	STRAP,
25	398094	1	HOSE, HYDRAULIC, L:2830MM

01.21(01) RADIATOR AND RELATED PARTS

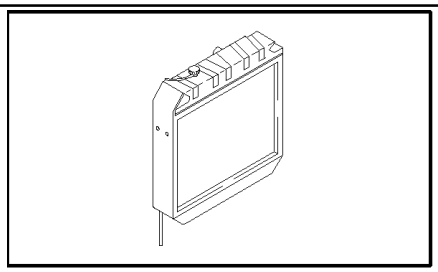

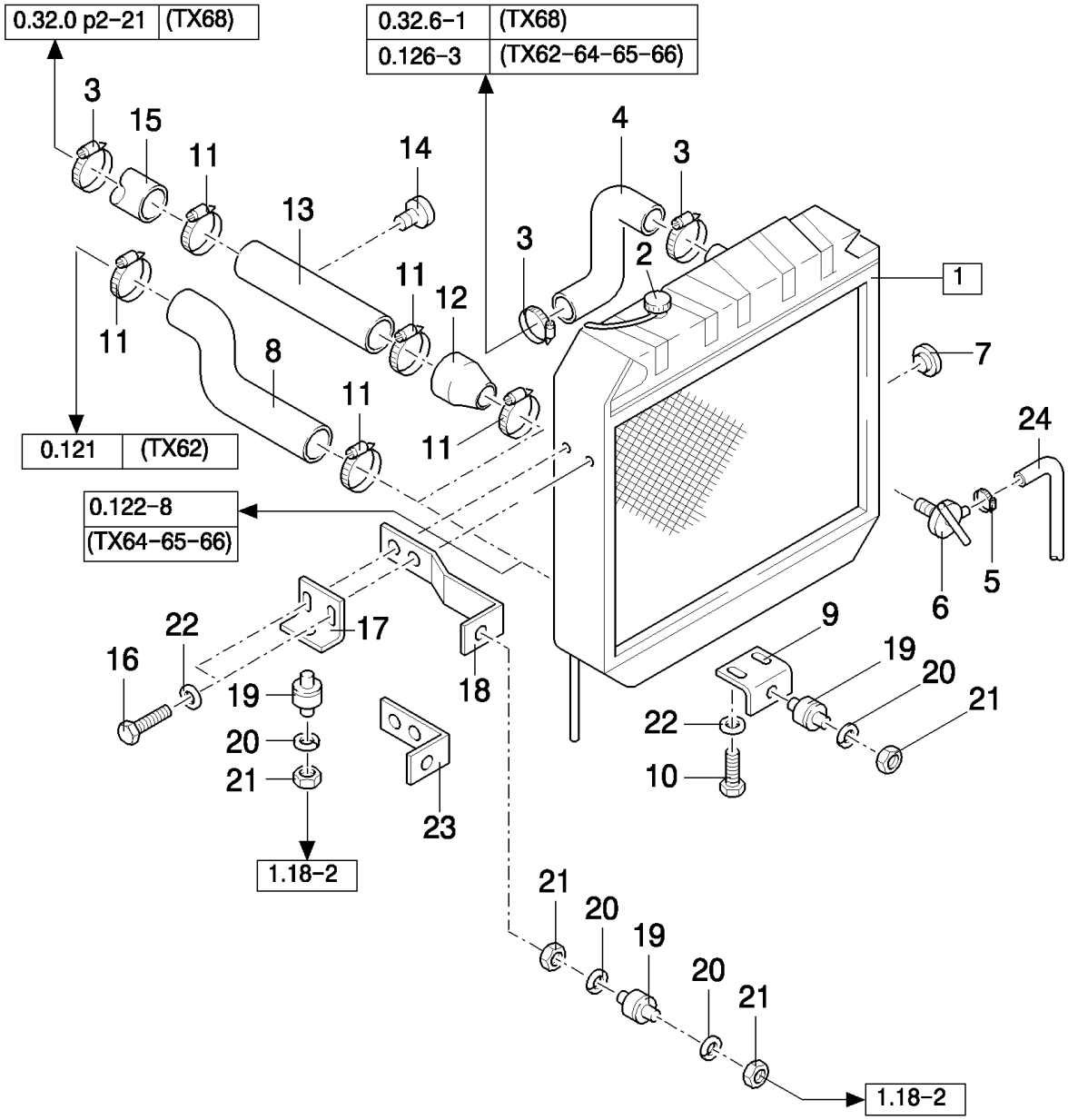

ONLY VALID UNTIL --1032999 (TX62-64-65-66-68PLUS) AND UNTIL --1076999 (NOT TX68PLUS)

TX68 COMBINE - BASE UNIT

01.21(01) RADIATOR AND RELATED PARTS

ссылка	Номер детали	Кол-во	Описание
1	9509568	1	RADIATOR, (2), FOR TX66 ONLY
1	9850250	1	RADIATOR, (2), FOR TX68 ONLY
1	9837564	1	RADIATOR, (2), FOR TX64-65 ONLY
1	84015387	1	RADIATOR, (2), FOR TX62 ONLY
2	9508904	1	CAP, RADIATOR,
3	381145	AR	CLAMP,
4	9835384	1	HOSE, , FOR TX66 ONLY
4	9850245	1	HOSE, , FOR TX68 ONLY
4	9833544	1	ELBOW, , FOR TX62-64-65 ONLY
5	913888	1	CLAMP, HOSE,
6	441031	1	DRAINCOCK/TAP, SUPPLY,
7	355932	1	PLUG,
8	84018290	1	HOSE, FLEXIBLE, , FOR TX62 ONLY
9	84011922	1	BRACKET,
10	43138	4	SCREW, Hex, M10 x 20, 8.8, Full Thd, , FOR TX68 ONLY
11	360747	3	CLAMP,
12	9833543	1	HOSE, , FOR TX68 ONLY
13	9837283	1	TUBE, , FOR TX68 ONLY
14	440654	1	PLUG,
15	9850081	1	HOSE, , FOR TX68 ONLY
16	43140	4	BOLT, Hex, M10 x 30, 8.8, Full Thd, , FOR TX66 ONLY
17	84005927	2	SUPPORT,
18	84005925	AR	BRACKET,
19	393802	5	SHOCK ABSORBER,
20	322358	AR	WASHER, SPRING, Belleville, M8,
21	9706690	AR	NUT, M8, Cl 8,
22	140045	AR	WASHER, SPRING, Belleville, M10,
23	84021093	1	BRACKET,
24	9506183	1	HOSE,

ONLY VALID UNTIL --1032999 (TX62-64-65-66-68PLUS) AND UNTIL --1076999 (NOT TX68PLUS)

01.22(01) FUEL TANK

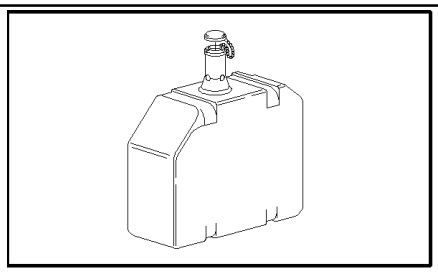

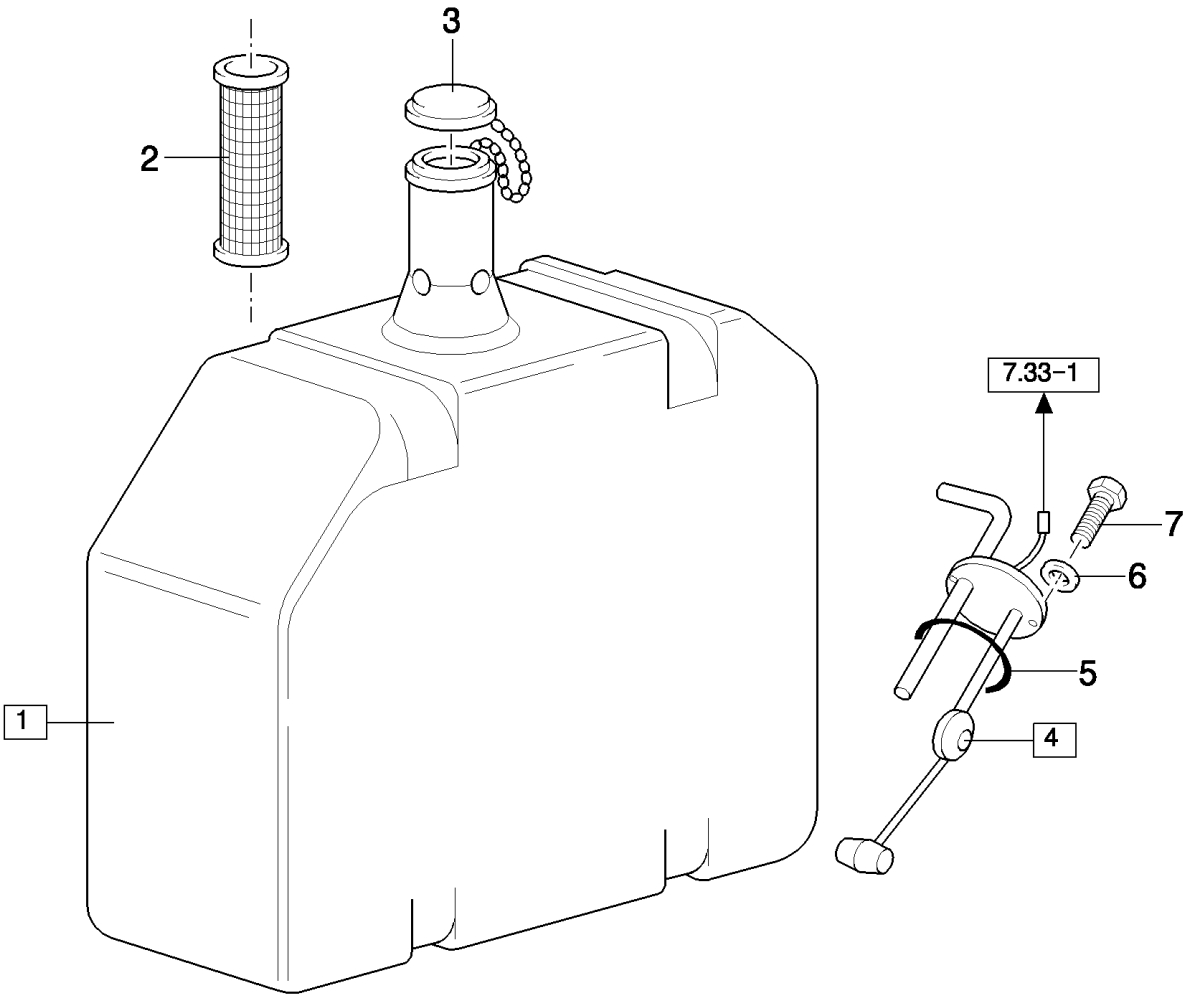

TX68 COMBINE - BASE UNIT

01.22(01) FUEL TANK

ссылка	Номер детали	Кол-во	Описание
1	9837016	1	FUEL TANK, (2,3) 600L, FOR TX66 ONLY, -C1032
1	9837016	1	FUEL TANK, (2,3) 600L, FOR TX68 ONLY, NOT FOR TX68PLUS, -C1076
1	84037094	1	FUEL TANK, (2,3) 600L, NOT FOR TX68PLUS, FOR TX68 ONLY, -C0056
1	84429767	1	FUEL TANK, (2,3) 600L, FOR TX68 ONLY, NOT FOR TX68PLUS, -C0075
1	84436656	1	FUEL TANK, (2,3) 600L, NOT FOR TX68PLUS, FOR TX68 ONLY, ASN D348
1	84037094	1	FUEL TANK, (2,3) 600L, FOR TX68PLUS ONLY, FOR TX65-66-67-68 ONLY, -C0057
1	84429767	1	FUEL TANK, (2,3) 600L, FOR TX65-66-67-68 ONLY, FOR TX68PLUS ONLY, -C0075
1	84436656	1	FUEL TANK, (2,3) 600L, FOR TX68PLUS ONLY, FOR TX65-66-67-68 ONLY, ASN D348
1	9838328	1	FUEL TANK, (2,3) 450L, FOR TX62-64-65 ONLY, -C1032
1	84031282	1	FUEL TANK, (2,3) 450L, FOR TX62-63-64 ONLY, -C0051
1	84429766	1	FUEL TANK, (2,3) 450L, FOR TX62-63-64 ONLY, -C0075
1	84436655	1	FUEL TANK, (2,3) 450L, FOR TX62-63-64 ONLY, ASN D348
2	9501200	1	FILTER, STRAINER,
3	448519	1	CAP, FILLER, , -C7520
3	84041999	1	CAP, , D7520-
4	9837197	1	INDICATOR, (5), -C4550
4	84019907	1	INDICATOR, (5), D4550-
5	9832364	1	SEAL,
6	322356	6	WASHER, 5MM
7	120098	6	BOLT, Hex, M5 x 20, 8.8, Full Thd,

01.23(01) FUEL TANK

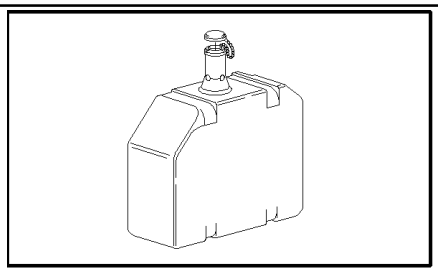

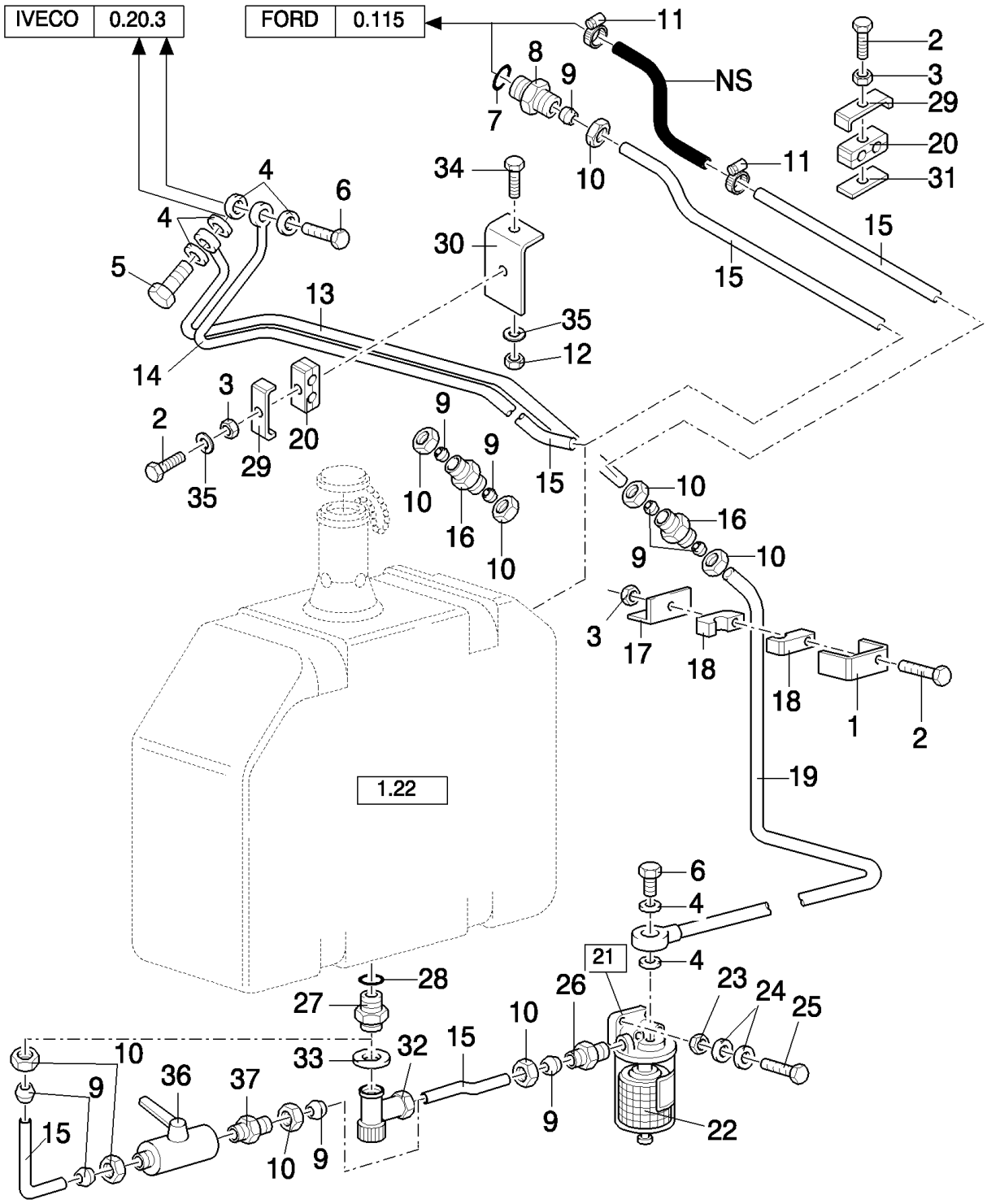

TX68 COMBINE - BASE UNIT

01.23(01) FUEL TANK

ссылка	Номер детали	Кол-во	Описание
1	433101	1	SUPPORT,
2	120102	AR	SCREW, Hex, M6 x 40, 8.8, Full Thd,
3	412152	AR	NUT, LOCK, M6 x 1, Cl 8.8,
4	220049	AR	WASHER, SEALING,
5	419408	1	SCREW, HOLLOW,
6	80354969	AR	SCREW, HOLLOW,
7	128999	1	O-RING, -111, 70 Duro, .424" ID x .103" Thk, , FOR TX62-64-65-66-67 ONLY, -C5500
8	9838950	1	CONNECTOR, HYD., , FOR TX62-64-65-66 ONLY, -C5500
8	395737	1	CONNECTOR, HYD., , FOR TX62-64-65-66 ONLY, -C0020
8	84042305	1	CONNECTOR, HYD., , FOR TX62-63-64-65-66-67 ONLY, D6430-
8	84042305	1	CONNECTOR, HYD., , NOT FOR TX68PLUS, FOR TX68 ONLY, D1077-
9	150014	AR	FERRULE,
10	86548975	AR	NUT,
11	82039341	2	CLAMP, HOSE, , NOT FOR TX68PLUS
12	15896221	1	NUT, M6, Cl 10,
13	84000372	1	TUBE, HYD, , NOT FOR TX68PLUS, FOR TX68 ONLY, -C1076
13	84069472	1	TUBE, HYD, , FOR TX68PLUS ONLY
14	84000261	1	TUBE, HYD, , FOR TX68 ONLY, -C4640
14	84014975	1	TUBE, RIGID, , FOR TX68 ONLY, NOT FOR TX68PLUS, -C0045
14	84042739	1	TUBE, RIGID, , FOR TX68PLUS ONLY
15	371539	AR	TUBE, RIGID, DIA.:10,L:2M
16	150017	3	CONNECTOR, HYD.,
17	9503178	1	SUPPORT,
18	433008	2	CLAMP,
19	84007226	1	TUBE, RIGID, , FOR TX62-64-65-66-68 ONLY, -C1032
19	84007226	1	TUBE, RIGID, , NOT FOR TX68PLUS, FOR TX68 ONLY, -C1076
19	84042201	1	TUBE, HYD, , FOR TX65 ONLY, FOR TX68PLUS ONLY, D1033-
19	84041298	1	TUBE, RIGID, , NOT FOR TX68PLUS, FOR TX66-67-68 ONLY, D1030-
19	84037124	1	TUBE, RIGID, , FOR TX62-63-64 ONLY, D1033-
20	430357	6	CLAMP,
21	9512385	1	FILTER, FUEL, (22)
22	89512387	1	FILTER, FUEL,
23	9706690	2	NUT, M8, Cl 8,
24	322358	4	WASHER, SPRING, Belleville, M8,
25	43128	2	BOLT, Hex, M8 x 30, 8.8,
26	420522	1	CONNECTOR, HYD.,
27	84000469	1	CONNECTOR, HYD., , FOR TX66-68 ONLY, -C4640
27	84014744	1	CONNECTOR, HYD., , FOR TX66-67-68 ONLY, D4640-
27	84014744	1	CONNECTOR, HYD., , FOR TX62-63-64-65 ONLY
28	9502644	1	O-RING,
29	431941	3	SUPPORT,
30	84005429	1	BRACKET,
31	434097	1	BRACKET,
32	9514922	1	DRAINCOCK/TAP, SUPPLY, , FOR TX66-68 ONLY, -C4640

TX68 COMBINE - BASE UNIT

01.23(01) FUEL TANK

ссылка	Номер детали	Кол-во	Описание
33	9511034	1	GASKET, , FOR TX66-68 ONLY, -C4640
34	80120099	1	BOLT, Hex, M6 x 16, 8.8,
35	322357	3	WASHER, SPRING, Belleville, M6,
36	84011517	1	DRAINCOCK/TAP, SUPPLY,
37	385812	2	CONNECTOR, HYD.,

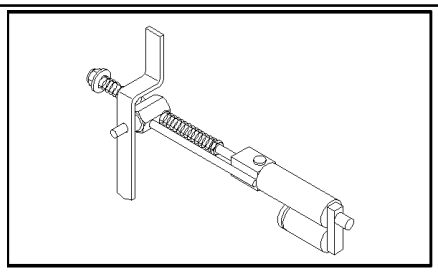

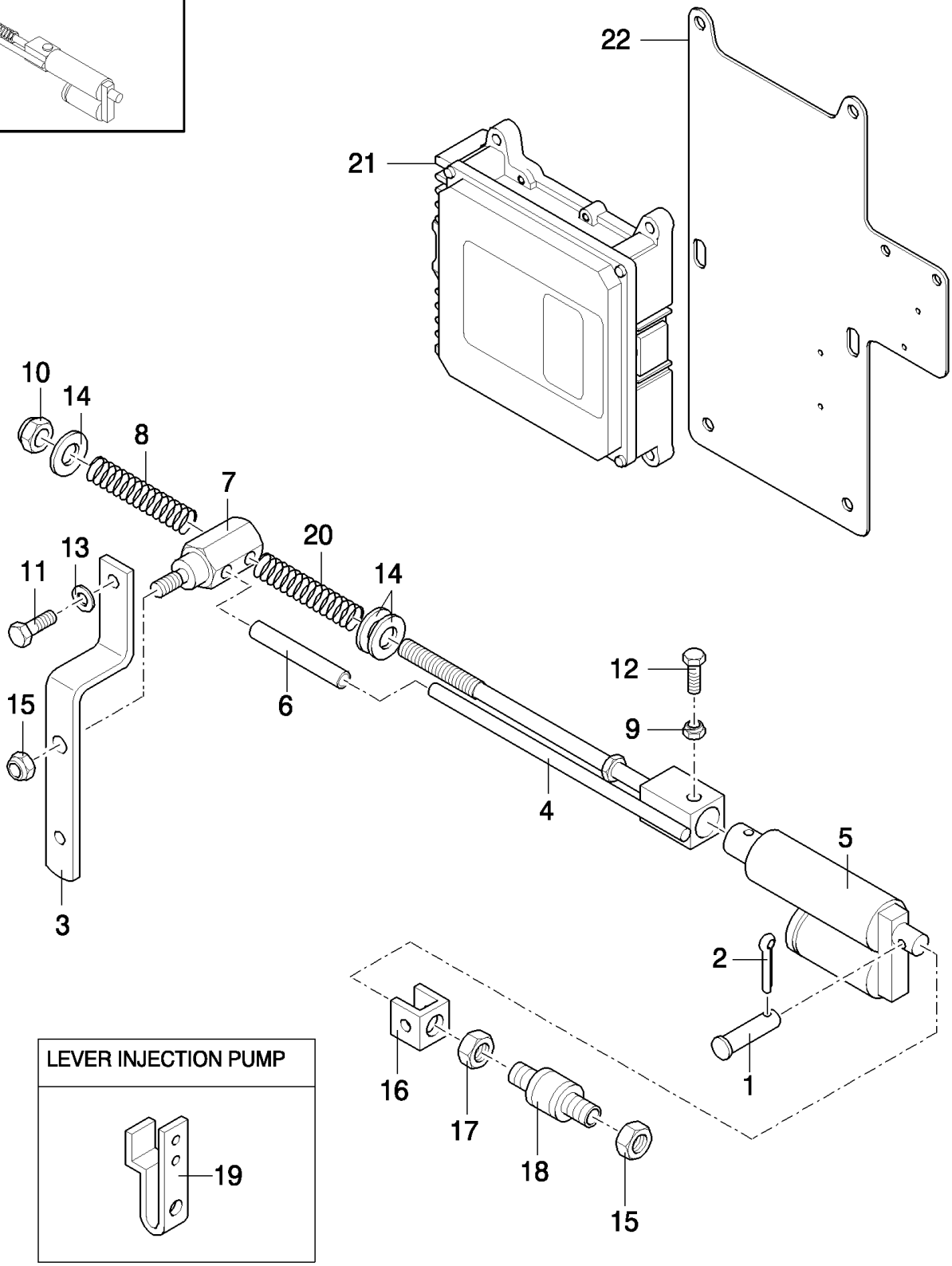
22
21
10
14
8
7
20
13
11
14
12
15
6
9
4
5
3
2
1
16
17
18
15
LEVER INJECTION PUMP
19

TX68 COMBINE - BASE UNIT

01.24(01) ENGINE ACCESSORIES

ссылка	Номер детали	Кол-во	Описание
1	376876	1	PIN, CLEVIS, M6 x 30,
2	300399	1	PIN, SPLIT (COTTER),
3	9833321	1	HANDLE, , FOR TX64-65-66 ONLY, -C5510
3	84026228	1	LEVER, , FOR TX63-64-65-66-67 ONLY, BSN F5510
3	84073151	1	LEVER, , FOR TX63-64-65-66-67 ONLY, ASN D316
3	84012972	1	HANDLE, , FOR TX62 ONLY, -C5640
3	84021473	1	HANDLE, , FOR TX62 ONLY, -C0003
3	84026229	1	HANDLE, , FOR TX62 ONLY, D5510-
3	9850772	1	HANDLE, , FOR TX68 ONLY, -C6620
3	84037332	1	HANDLE, , FOR TX68PLUS ONLY, D6620-
3	84037332	1	HANDLE, , NOT FOR TX68PLUS, FOR TX68 ONLY, -C0043
3	84026228	1	LEVER, , FOR TX68 ONLY, NOT FOR TX68PLUS, BSN F1077
3	84073151	1	LEVER, , NOT FOR TX68PLUS, FOR TX68 ONLY, ASN D316
4	9833469	1	ROD, ADJUSTMENT, , FOR TX62-64-65-66 ONLY, -C5640
4	84021391	1	ROD, ADJUSTMENT, , FOR TX62-64-65-66 ONLY, -C0003
4	9850775	1	ROD, ADJUSTMENT, , FOR TX68 ONLY, -C5510
4	84026051	1	ROD, ADJUSTMENT, , D5510-
5	84036177	1	ACTUATOR,
6	9831157	1	BUSHING,
7	84005907	1	HINGE,
8	80918027	1	SPRING,
9	353308	1	NUT, M6 x 1, Cl 8,
10	86514720	1	NUT, LOCK, M10
11	80120099	2	BOLT, Hex, M6 x 16, 8.8,
12	86977789	1	SCREW, Hex, M6 x 35, 8.8,
13	322357	2	WASHER, SPRING, Belleville, M6,
14	378244	AR	WASHER, M10,
15	86629542	1	NUT, LOCK, M8 x 1.25, Cl 8,
16	84026054	1	SUPPORT, , D5510-
17	9706690	2	NUT, M8, Cl 8, , D5510-
18	393802	1	SHOCK ABSORBER, , D5510-
19	84026882	1	LEVER, , FOR TX62-64-65-66 ONLY
20	80918027	1	SPRING, , FOR TX62-64-65-66 ONLY, -C6620
20	80918027	1	SPRING, , FOR TX62 ONLY, D6620-
20	355988	1	SPRING, , FOR TX63-64-65-66-67 ONLY, D6620-
21	82024441	1	ELECTRONIC UNIT, CONTROL, , FOR TX68 ONLY, BSN F246365
21	82024442	1	ELECTRONIC UNIT, CONTROL, , FOR TX68 ONLY, ASN D366
22	84441248	1	PLATE, , FOR TX68 ONLY, D1246-

01.25(01) BLOW-OFF SYSTEM

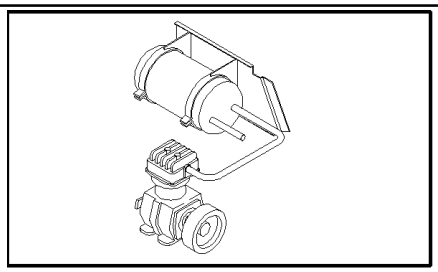

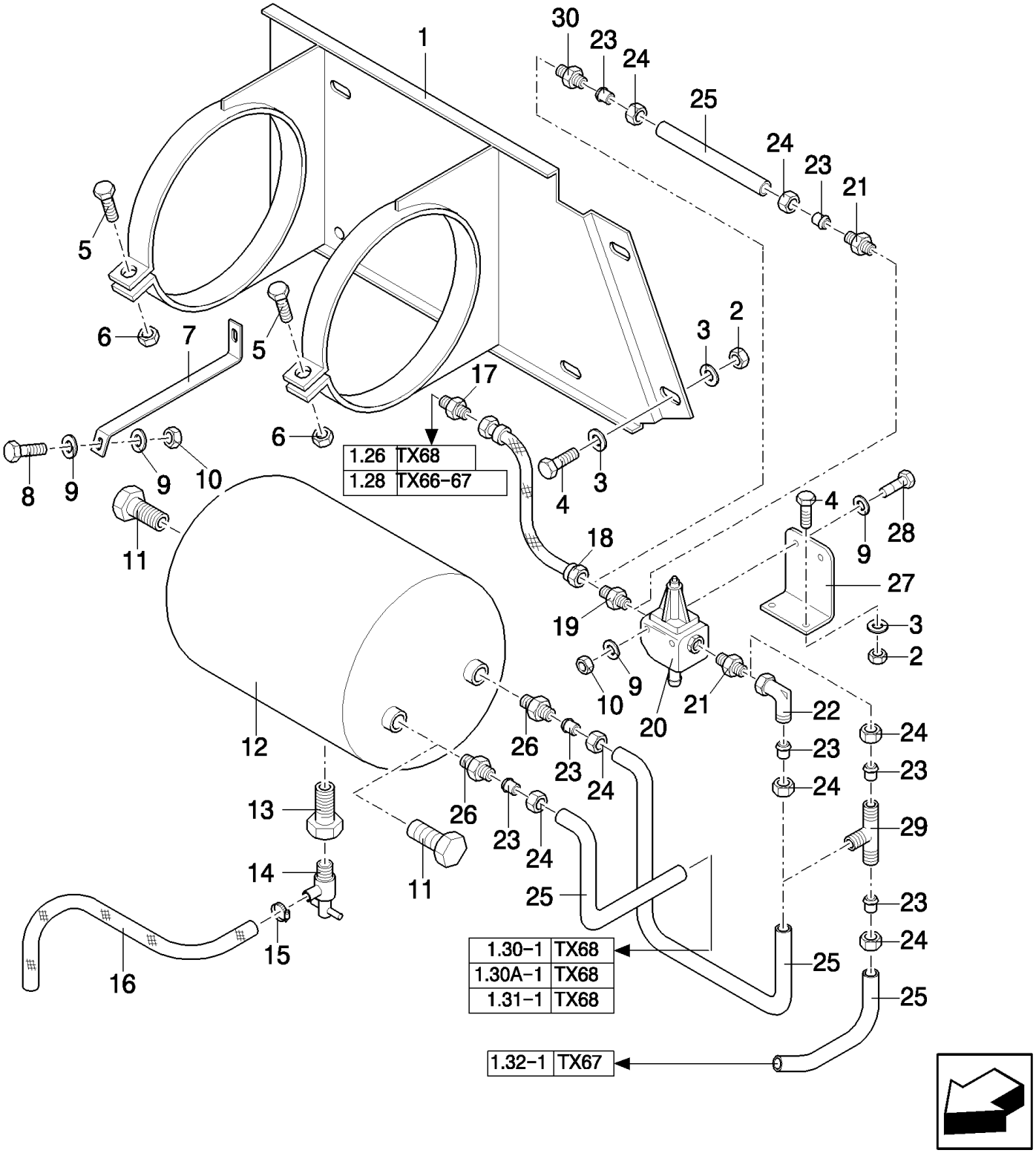

ONLY VALID UNTIL --1032999 (TX66-67) AND UNTIL --1076999 (NOT TX68PLUS)

TX68 COMBINE - BASE UNIT

01.25(01) BLOW-OFF SYSTEM

ссылка	Номер детали	Кол-во	Описание
1	84037076	1	SUPPORT,
2	100016	6	NUT, M10, Cl 8,
3	140045	10	WASHER, SPRING, Belleville, M10,
4	11106231	6	BOLT, Hex, M10 x 25, 10.9, Full Thd, M10x30
5	43129	2	BOLT, Hex, M8 x 40, 8.8,
6	86629542	2	NUT, LOCK, M8 x 1.25, Cl 8,
7	84037854	1	BRACKET,
8	43127	2	BOLT, Hex, M8 x 25, 8.8,
9	322358	8	WASHER, SPRING, Belleville, M8,
10	9706690	4	NUT, M8, Cl 8,
11	445073	1	CONNECTOR, HYD., , FOR TX66-68 ONLY
11	445073	2	CONNECTOR, HYD., , FOR TX67 ONLY
12	84036945	1	RESERVOIR, AIR,
13	84019122	1	CONNECTOR, HYD.,
14	441031	1	DRAINCOCK/TAP, SUPPLY,
15	913888	1	CLAMP, HOSE,
16	398094	1	HOSE, HYDRAULIC,
17	84022667	1	CONNECTOR, HYD.,
18	84019914	1	HOSE, HYDRAULIC, , FOR TX66-68 ONLY
18	84038319	1	HOSE, FLEXIBLE, , FOR TX67 ONLY
19	84022666	1	CONNECTOR, HYD.,
20	84043971	1	VALVE, PRESSURE RELIEF,
21	84022665	1	CONNECTOR, HYD., , NOT FOR TX68PLUS
21	9501819	1	CONNECTOR, HYD., , FOR TX68PLUS ONLY
22	84019177	1	ELBOW, , NOT FOR TX68PLUS
23	335168	4	FERRULE,
24	335170	4	NUT,
25	371534	AR	TUBE, RIGID, DIA.:18,L:2M
26	9501819	1	CONNECTOR, HYD., , NOT FOR TX68PLUS
26	447770	1	CONNECTOR, HYD., , FOR TX68PLUS ONLY
27	84023024	1	SUPPORT, , NOT FOR TX68PLUS
28	43133	2	SCREW, Hex, M8 x 80, 8.8,
29	379431	1	CONNECTION, 3 WAY, , FOR TX67 ONLY
30	458717	1	CONNECTOR, HYD., , FOR TX68PLUS ONLY
31	9501819	1	CONNECTOR, HYD., , NOT FOR TX68PLUS
31	84019177	1	ELBOW, , FOR TX68PLUS ONLY

ONLY VALID UNTIL --1032999 (TX66-67) AND UNTIL --1076999 (NOT TX68PLUS)

01.25A(01) BLOW-OFF SYSTEM

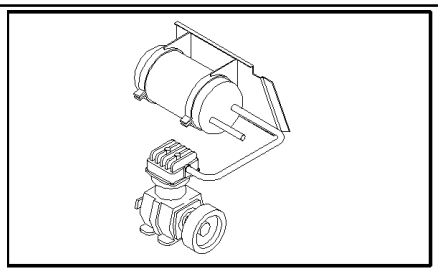

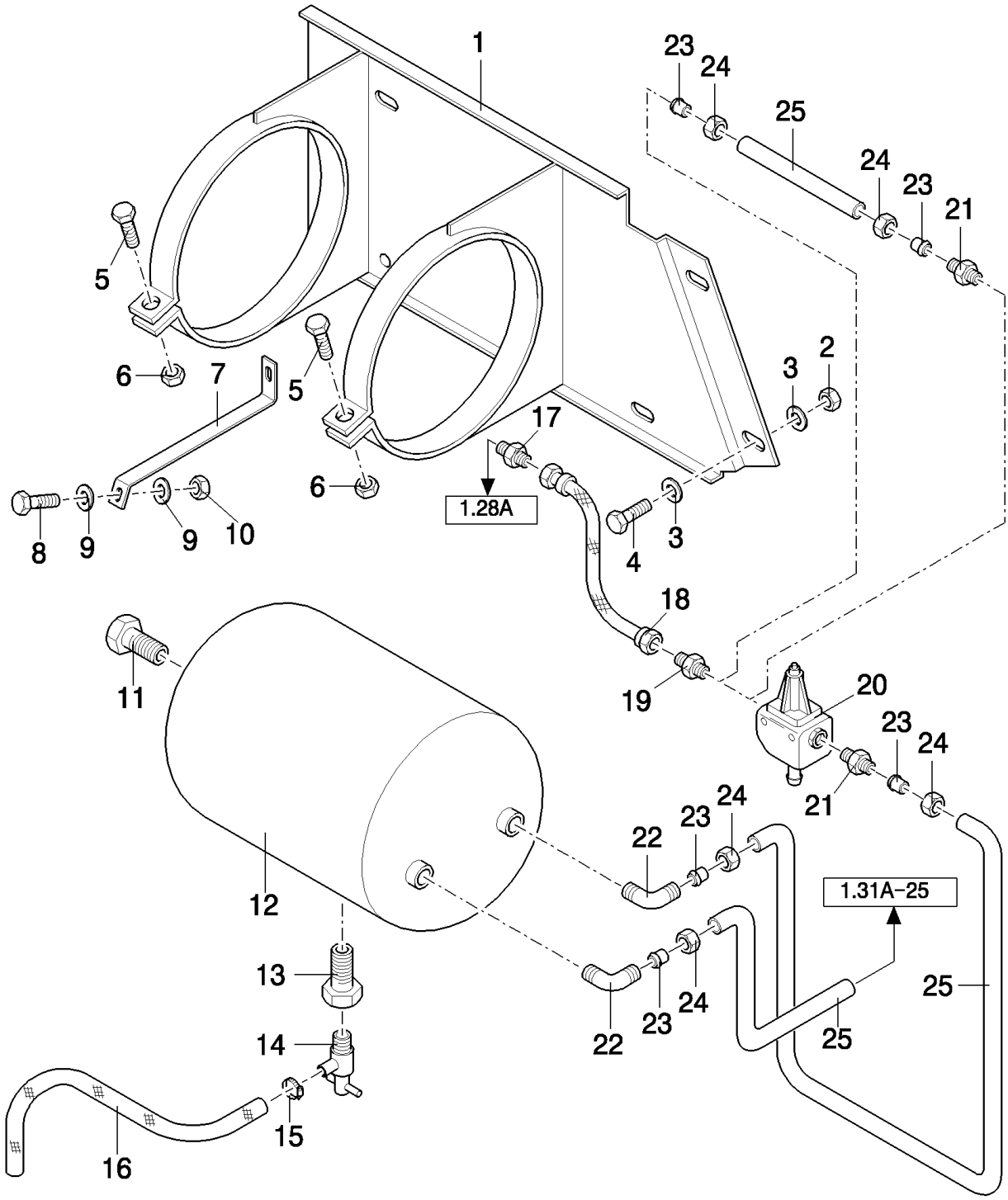

ONLY VALID FROM --1033001 AND FROM --1077001 (NOT TX68PLUS)

TX68 COMBINE - BASE UNIT

01.25A(01) BLOW-OFF SYSTEM

ссылка	Номер детали	Кол-во	Описание
1	84037076	1	SUPPORT,
2	100016	6	NUT, M10, Cl 8,
3	140045	10	WASHER, SPRING, Belleville, M10,
4	11106231	6	BOLT, Hex, M10 x 25, 10.9, Full Thd, M10x30
5	43129	2	BOLT, Hex, M8 x 40, 8.8,
6	86629542	2	NUT, LOCK, M8 x 1.25, Cl 8,
7	84037854	1	BRACKET,
8	43127	2	BOLT, Hex, M8 x 25, 8.8,
9	322358	8	WASHER, SPRING, Belleville, M8,
10	9706690	4	NUT, M8, Cl 8,
11	445073	1	CONNECTOR, HYD.,
12	84036945	1	RESERVOIR, AIR,
13	84019122	1	CONNECTOR, HYD.,
14	441031	1	DRAINCOCK/TAP, SUPPLY,
15	913888	1	CLAMP, HOSE,
16	398094	1	HOSE, HYDRAULIC,
17	84022667	1	CONNECTOR, HYD., , BSN C479
17	84435826	1	CONNECTOR, HYD., , ASN D480
18	84038319	1	HOSE, FLEXIBLE,
19	84022666	1	CONNECTOR, HYD.,
20	84043971	1	VALVE, PRESSURE RELIEF,
21	9501819	1	CONNECTOR, HYD.,
22	84019177	1	ELBOW,
23	335168	4	FERRULE,
24	335170	4	NUT,
25	371534	AR	TUBE, RIGID, DIA.:18,L:2M

ONLY VALID FROM --1033001 AND FROM --1077001 (NOT TX68PLUS)

01.26(01) AIR COMPRESSOR - UNTIL --1076999 (NOT FOR TX68PLUS)

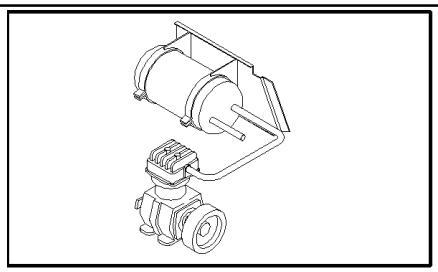

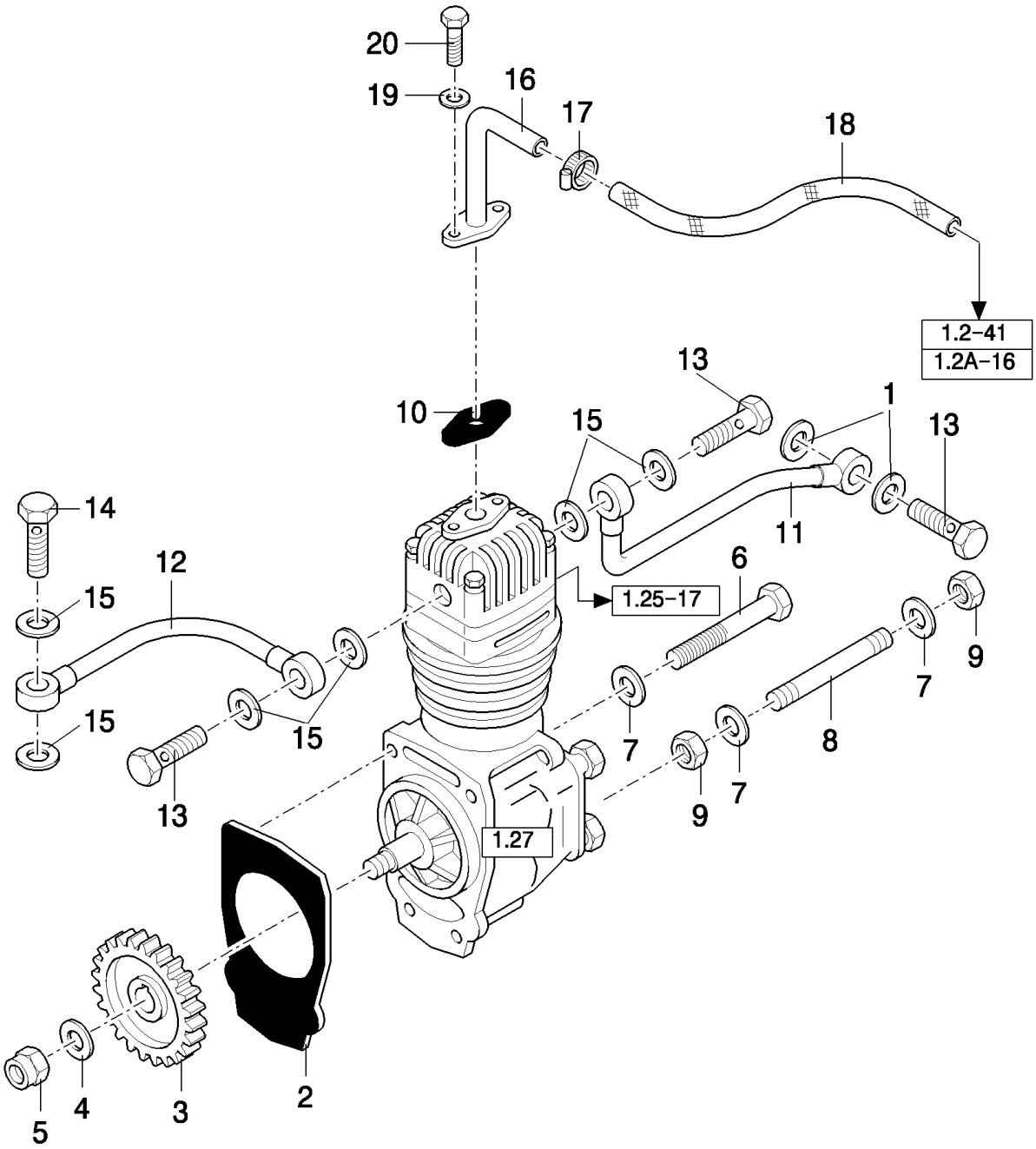

TX68 COMBINE - BASE UNIT

01.26(01) AIR COMPRESSOR - UNTIL --1076999 (NOT FOR TX68PLUS)

ссылка	Номер детали	Кол-во	Описание
1	4858610	2	GASKET,
2	4864032	1	GASKET,
3	61316311	1	SPROCKET, DRIVEN,
4	4709364	1	WASHER,
5	4709365	1	NUT,
6	15972121	2	BOLT, Hex, M10 x 1.25 x 115, 8.8,
7	11190574	3	WASHER, SPRING, Belleville, M10.5,
8	8005308	1	STUD,
9	12164721	2	NUT, M10 x 1.25, Cl 10,
10	4863948	1	GASKET,
11	61319179	1	TUBE, RIGID,
12	61318758	1	TUBE, RIGID,
13	4864084	3	BOLT, BANJO,
14	4864085	1	BOLT, BANJO,
15	4858609	6	O-RING,
16	84036947	1	TUBE, RIGID, , NOT FOR TX68PLUS
16	84019884	1	TUBE, RIGID, , FOR TX68PLUS ONLY
17	382528	2	CLAMP, , NOT FOR TX68PLUS
17	382527	1	CLAMP, HOSE, , FOR TX68PLUS ONLY
18	84022232	1	HOSE, , NOT FOR TX68PLUS
19	412649	2	WASHER, SPRING, Belleville, M6,
20	120100	2	BOLT, Hex, M6 x 20, 8.8,

01.27(01) AIR COMPRESSOR - UNTIL --1076999 (NOT FOR TX68PLUS)

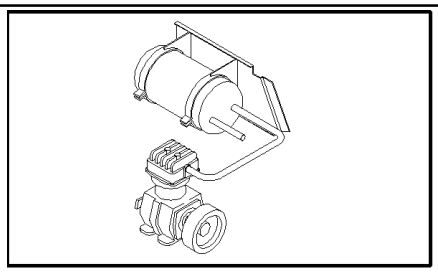

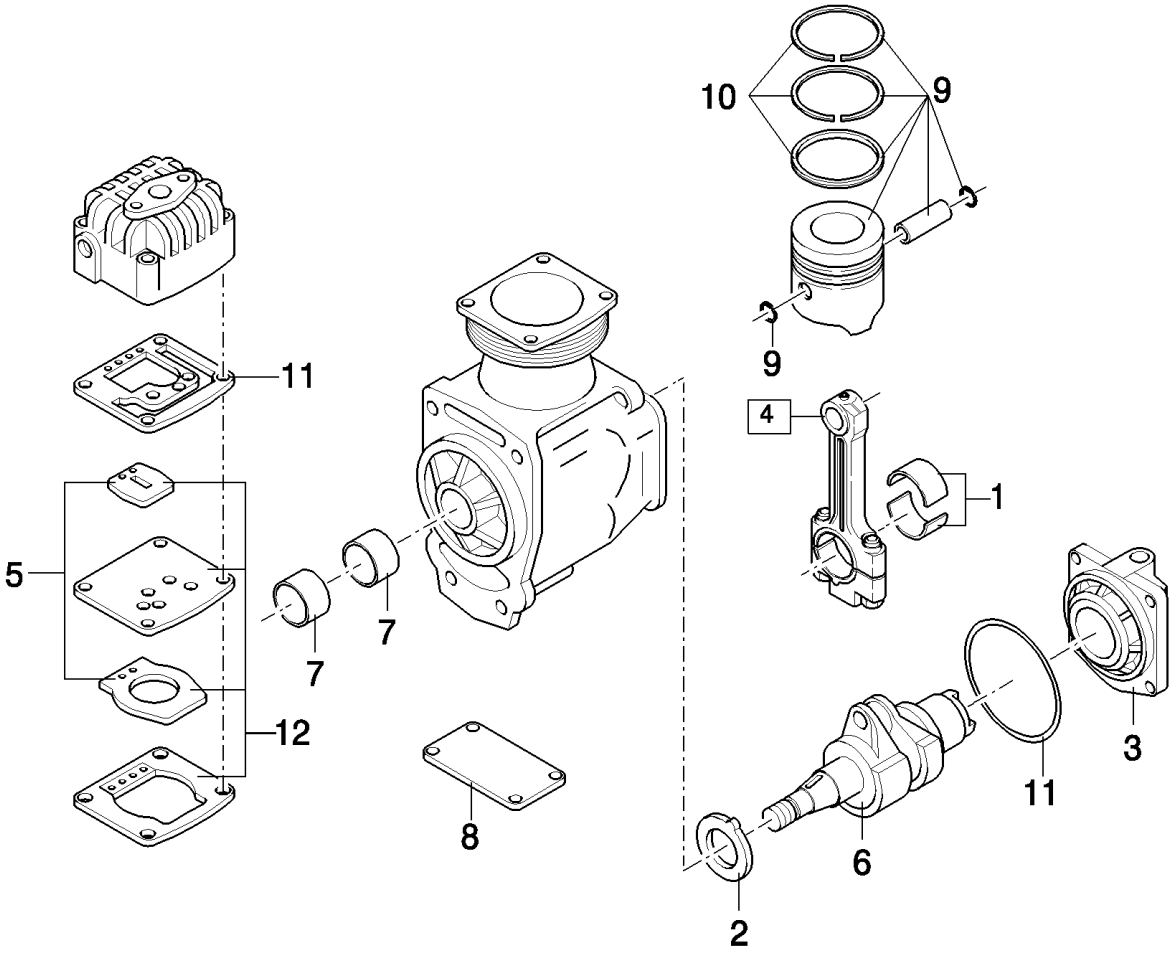

TX68 COMBINE - BASE UNIT

01.27(01) AIR COMPRESSOR - UNTIL --1076999 (NOT FOR TX68PLUS)

ссылка	Номер детали	Кол-во	Описание
	99440235	1	COMPRESSOR, AIR, (1 to 12)
1	9918517	2	HALF BEARING,
2	79022437	1	RING,
3	93159347	1	COVER,
4	93190969	1	KIT, (1)
5	79071642	1	KIT,
6	79022438	1	SHAFT,
7	79022436	2	BUSHING,
8	8199051	1	COVER,
9	93161302	1	KIT, DIA.:80
9	93161303	1	KIT, DIA.:80.2
9	93161304	1	KIT, DIA.:80.5
10	93161305	1	KIT, DIA.:80
10	93161306	1	KIT, DIA.:80.2
10	93161307	1	KIT, DIA.:80.5
11	93161585	1	KIT,
12	76033077	1	KIT,

01.28A(01) AIR COMPRESSOR

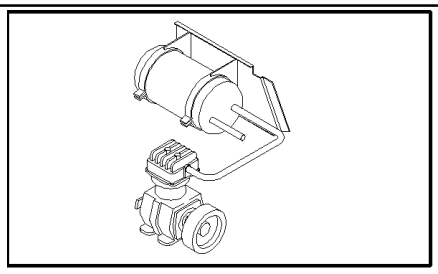

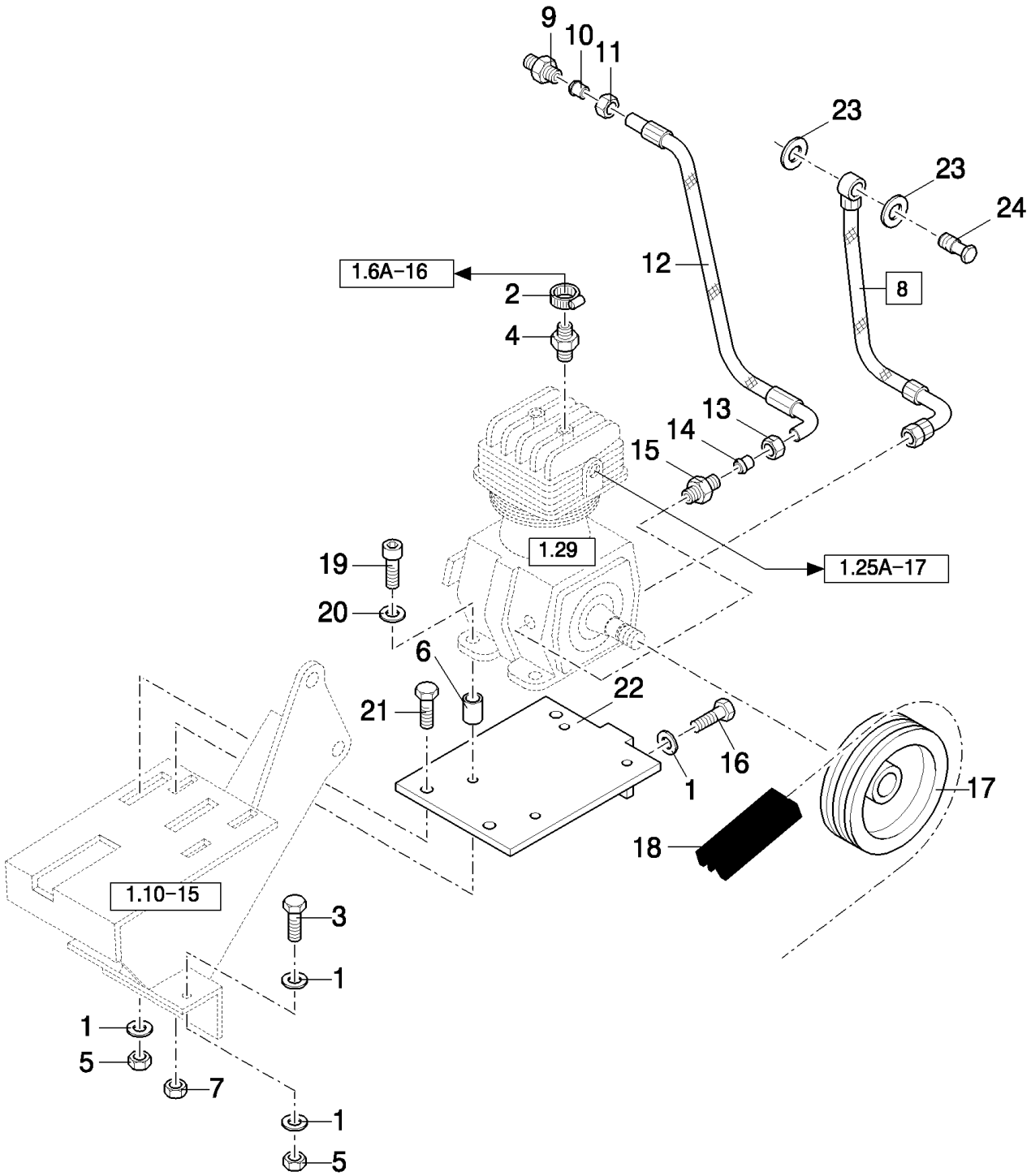

ONLY VALID FROM --1033001 AND FROM --1077001 (NOT TX68PLUS)

TX68 COMBINE - BASE UNIT

01.28A(01) AIR COMPRESSOR

ссылка	Номер детали	Кол-во	Описание
1	140045	AR	WASHER, SPRING, Belleville, M10,
2	382527	4	CLAMP, HOSE,
3	11106231	3	BOLT, Hex, M10 x 25, 10.9, Full Thd, M10x30
4	84036669	1	CONNECTOR, HYD.,
5	100016	AR	NUT, M10, Cl 8,
6	9812123	4	RING,
7	9706690	4	NUT, M8, Cl 8,
8	84053717	1	HOSE,
9	9514575	1	CONNECTOR, HYD.,
10	335136	1	FERRULE,
11	335135	1	NUT,
12	84043792	1	HOSE, HYDRAULIC,
13	84814896	1	NUT,
14	150013	1	FERRULE,
15	443659	1	CONNECTOR, HYD.,
16	120075	1	SCREW, Hex, M10 x 100, 8.8,
17	84052000	1	PULLEY, , BSN C359
17	84449152	1	PULLEY, , ASN D360
18	84817626	1	BELT, TRANSMISSION, , BSN C359
18	84449518	1	BELT, TRANSMISSION, , ASN D360
19	43130	4	BOLT, Hex, M8 x 50, 8.8,
20	322358	4	WASHER, SPRING, Belleville, M8,
21	86512446	3	BOLT, CARRIAGE, Short NK, M10 x 30, Cl8.8, Full Thd,
22	84035916	1	PLATE, COVER,
23	220122	3	SEAL,
24	84043297	1	SCREW, HOLLOW,

ONLY VALID FROM --1033001 AND FROM --1077001 (NOT TX68PLUS)

01.29(01) AIR COMPRESSOR - FROM --1077001 (NOT FOR TX68PLUS)

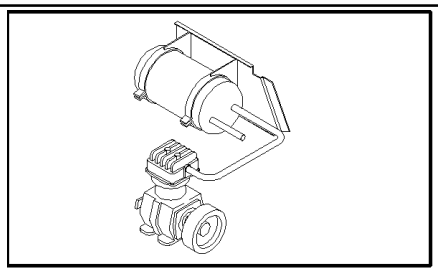

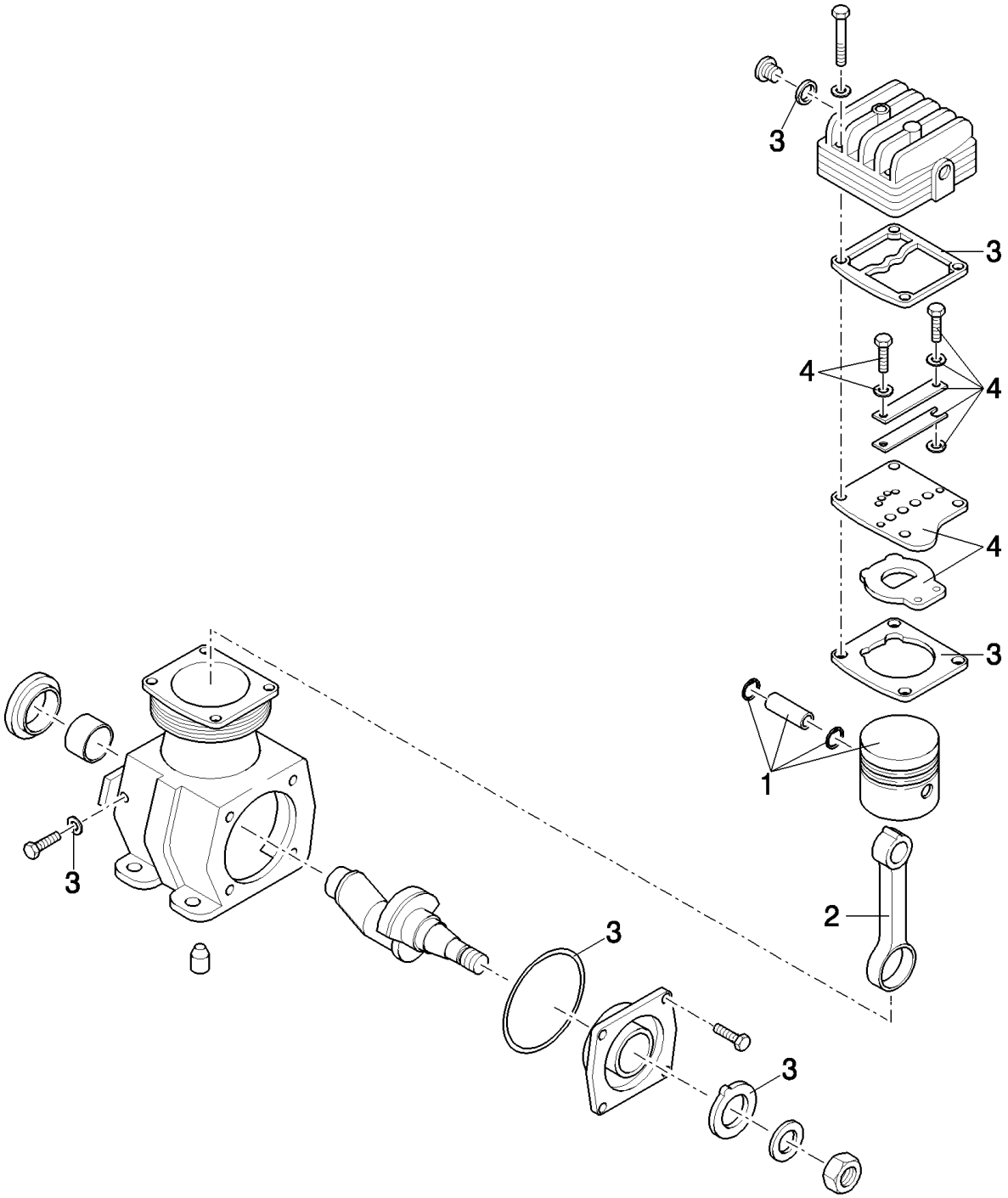

TX68 COMBINE - BASE UNIT

01.29(01) AIR COMPRESSOR - FROM --1077001 (NOT FOR TX68PLUS)

ссылка	Номер детали	Кол-во	Описание
	82003029	1	COMPRESSOR, AIR, , FOR TX66 ONLY, -C1032
	84041295	1	COMPRESSOR, AIR, , D1030-
1	9969245	1	PISTON ASSY.,
2	9969246	1	ROD, CONNECTING,
3	9969243	1	KIT,
4	9969244	1	KIT,

01.30(01) BLOW-OFF SYSTEM - UNTIL --1076999 (NOT FOR TX68PLUS)

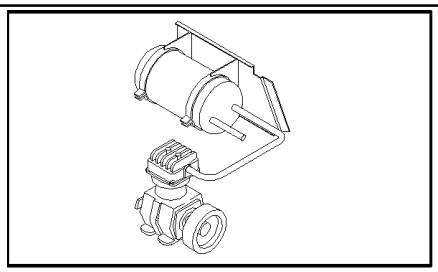

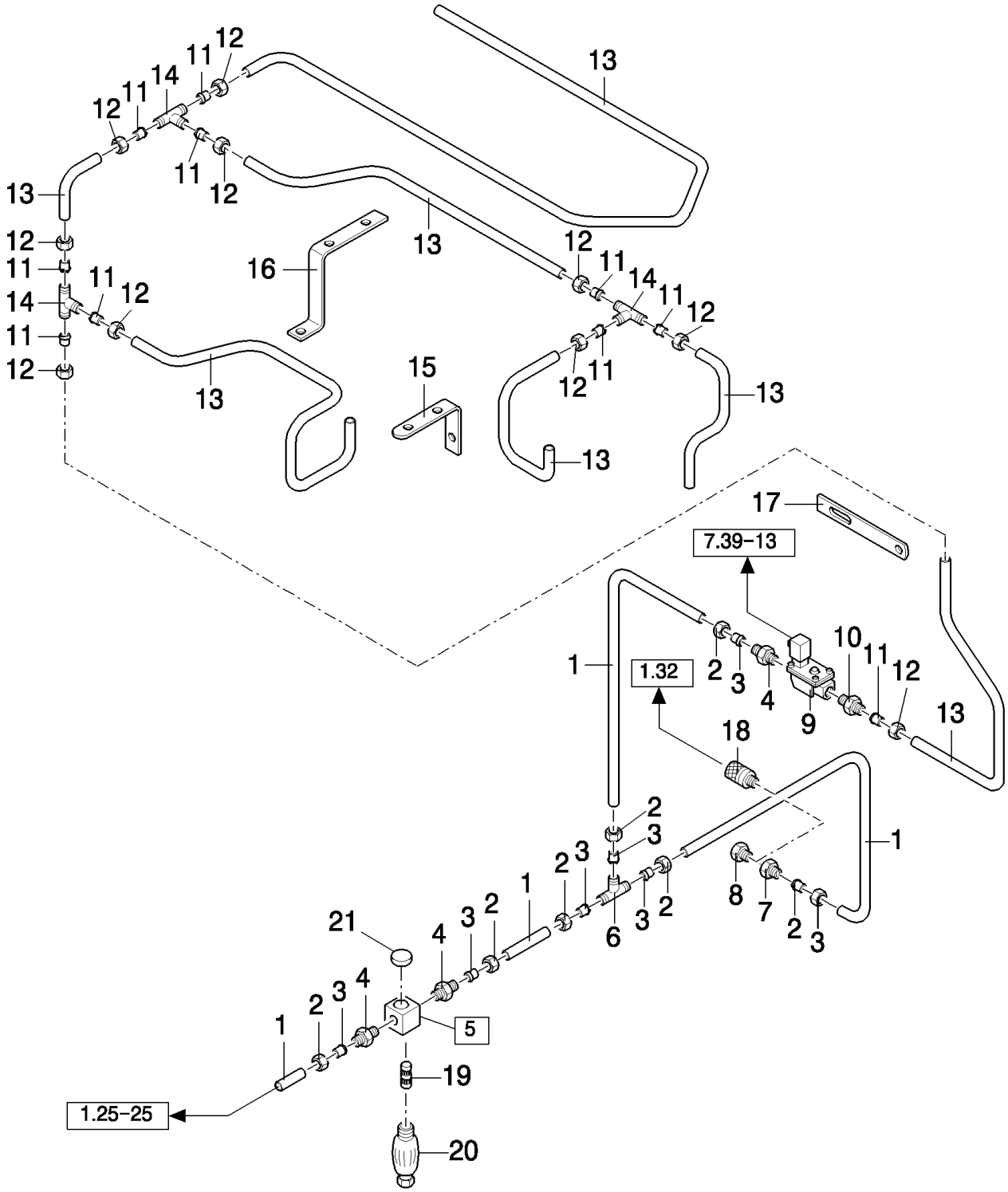

TX68 COMBINE - BASE UNIT

01.30(01) BLOW-OFF SYSTEM - UNTIL --1076999 (NOT FOR TX68PLUS)

ссылка	Номер детали	Кол-во	Описание
1	371534	AR	TUBE, RIGID, DIA.:18,L:2M
2	335170	AR	NUT,
3	335168	AR	FERRULE,
4	448603	3	CONNECTOR, HYD.,
5	84036064	1	FILTER, (19,20,21)
6	379431	1	CONNECTION, 3 WAY,
7	84037539	1	CONNECTOR, HYD.,
8	9837624	1	PLUG, , -C7550
9	84022290	1	VALVE, HYDRAULIC,
10	556916	1	CONNECTOR, HYD.,
11	150015	AR	FERRULE,
12	86548976	AR	NUT,
13	9513719	AR	TUBE, RIGID, DIA.:12,L:2M
14	150019	3	CONNECTION, 3 WAY,
15	84037700	1	BRACKET,
16	84037699	2	BRACKET,
17	84037702	1	PLATE,
18	84043491	1	COUPLING, QUICK, MALE, , D7550-
19	84078366	1	FILTER, STRAINER,
20	84078367	1	TANK,
21	84429771	1	COVER, ALU

01.30A(01) BLOW-OFF SYSTEM - TX68PLUS

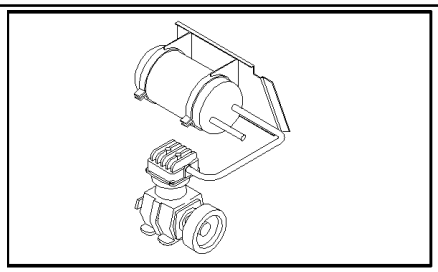

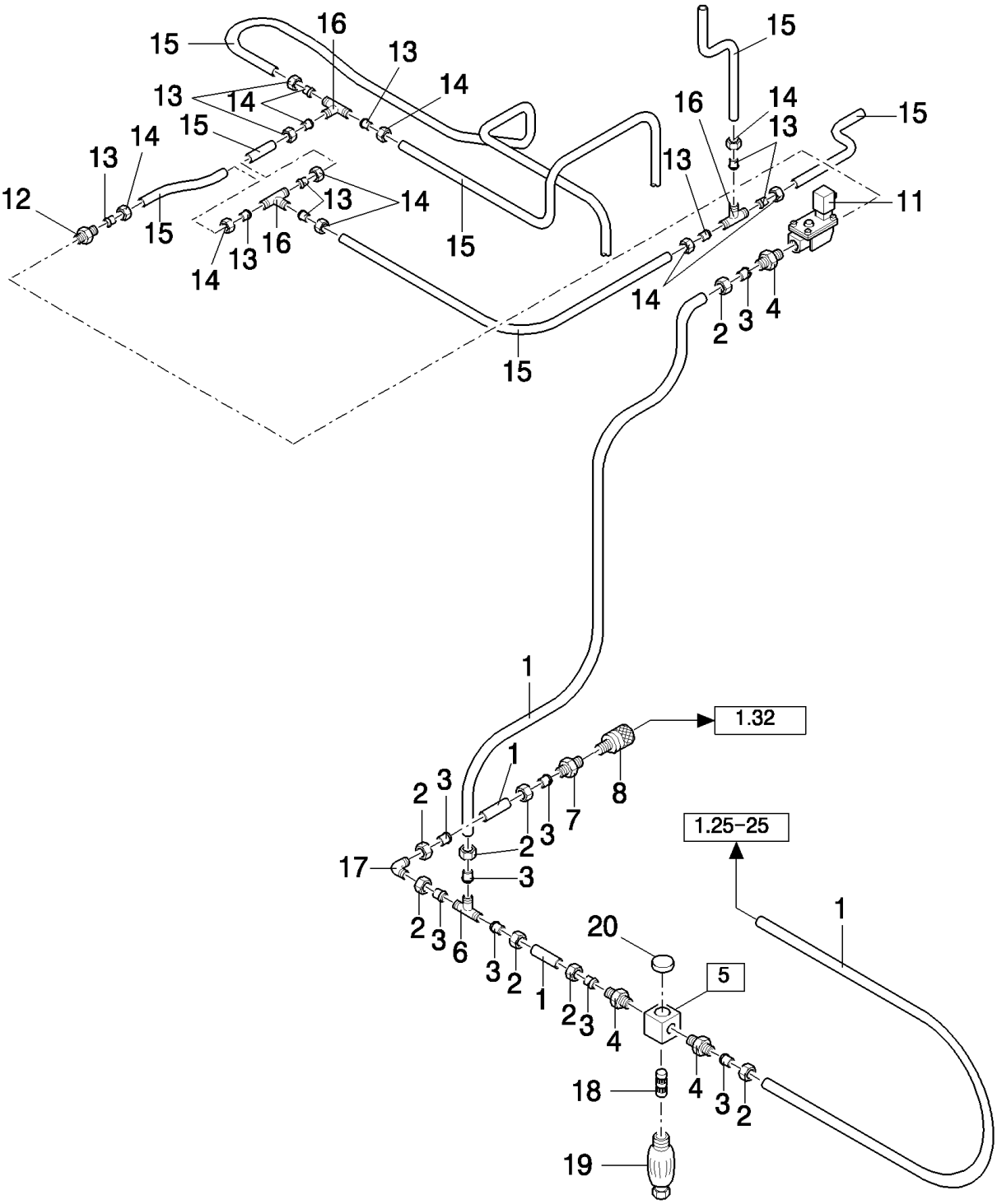

TX68 COMBINE - BASE UNIT

01.30A(01) BLOW-OFF SYSTEM - TX68PLUS

ссылка	Номер детали	Кол-во	Описание
1	371534	AR	TUBE, RIGID, DIA.:18,L:2M
2	335170	AR	NUT,
3	335168	AR	FERRULE,
4	448603	5	CONNECTOR, HYD.,
5	84036064	1	FILTER, (18,19,20)
6	84042442	1	CONNECTION, 3 WAY,
7	84037539	1	CONNECTOR, HYD.,
8	84043491	1	COUPLING, QUICK, MALE,
9	84019177	1	ELBOW,
10	84021296	1	TUBE, RIGID,
11	84022290	1	VALVE, HYDRAULIC,
12	556916	1	CONNECTOR, HYD.,
13	150015	1	FERRULE,
14	86548976	1	NUT,
15	9513719	AR	TUBE, RIGID, DIA.:12,L:2M
16	150019	3	CONNECTION, 3 WAY,
17	84019177	1	ELBOW,
18	84078366	1	FILTER, STRAINER,
19	84078367	1	TANK,
20	84429771	1	COVER, ALU

01.31A(01) BLOW-OFF SYSTEM

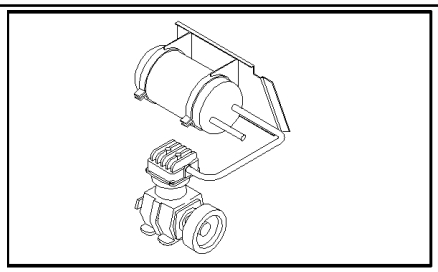

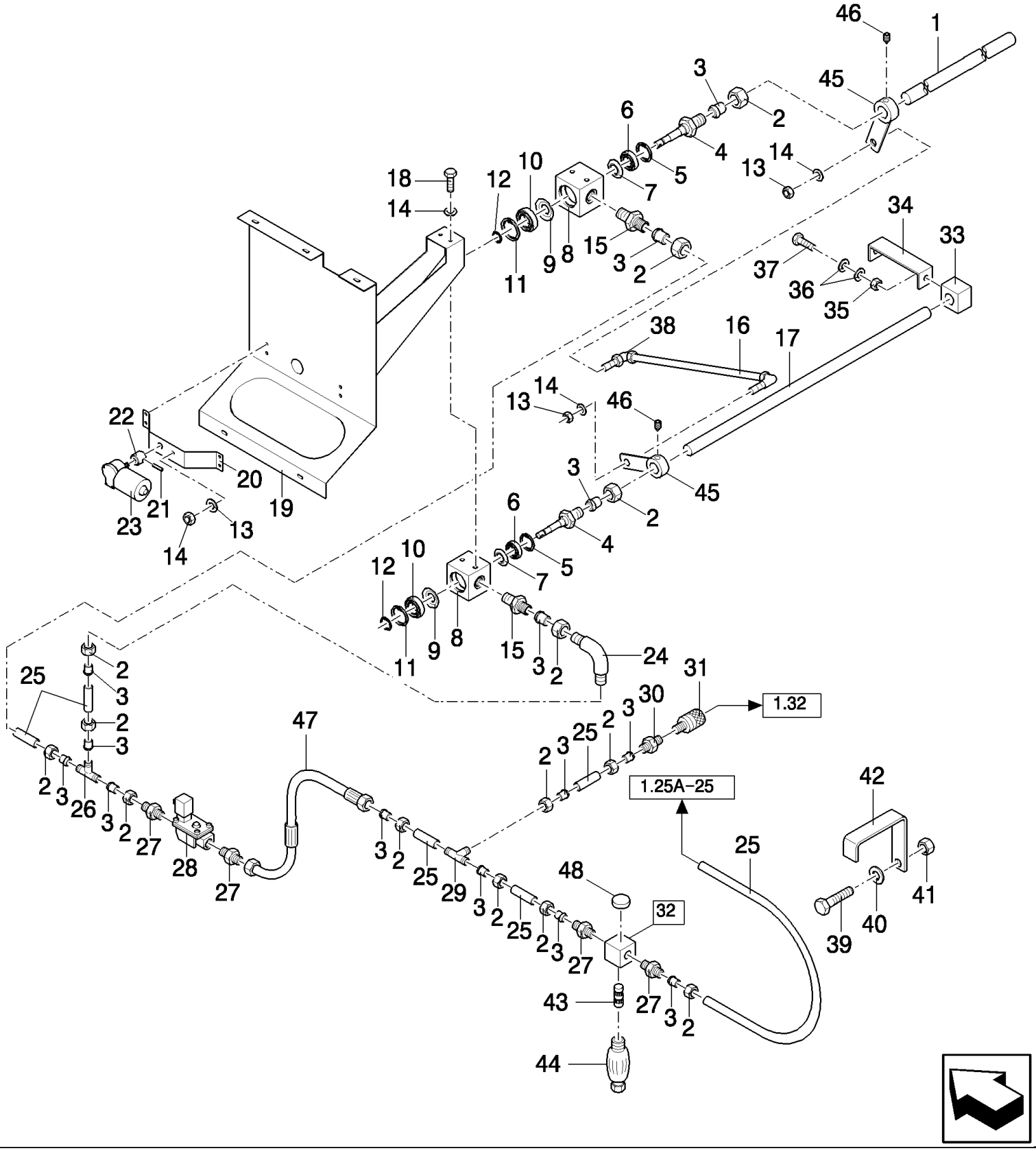

ONLY VALID FROM --1033001 AND FROM --1077001 (NOT TX68PLUS)

TX68 COMBINE - BASE UNIT

01.31A(01) BLOW-OFF SYSTEM

ссылка	Номер детали	Кол-во	Описание
1	84057337	1	TUBE, , FOR TX62-63-64-65-67 ONLY
1	84057596	1	TUBE, , FOR TX66-68 ONLY
2	335170	AR	NUT,
3	335168	AR	FERRULE,
4	84021292	2	CONNECTOR, HYD.,
5	300645	2	RING, SNAP, M42, Int,
6	300313	2	BEARING ASSY,
7	84021569	2	ELEMENT, SEALING,
8	84045379	2	HOUSING,
9	84021570	2	ELEMENT, SEALING,
10	727874	2	BEARING ASSY,
11	300647	2	RING, SNAP, M47, Int,
12	370016	2	RING, SNAP, M17, Ext,
13	9706690	AR	NUT, M8, Cl 8,
14	322358	AR	WASHER, SPRING, Belleville, M8,
15	9501819	2	CONNECTOR, HYD.,
16	84057330	2	ROD,
17	84057331	1	TUBE,
19	84053628	1	SUPPORT, , FOR TX62-63-64-65-67 ONLY
19	84057607	1	SUPPORT, , FOR TX66-68 ONLY
20	84052046	1	SUPPORT,
21	9510330	1	PIN, ROLL,
22	437642	1	BUSHING,
23	84056693	1	MOTOR, ELECTRIC,
24	84019177	1	ELBOW,
25	371534	AR	TUBE, RIGID, DIA.:18,L:2M
26	84042442	2	CONNECTION, 3 WAY,
27	448603	AR	CONNECTOR, HYD.,
28	84022290	2	VALVE, HYDRAULIC,
29	379431	1	CONNECTION, 3 WAY,
30	84037539	1	CONNECTOR, HYD.,
31	84043491	1	COUPLING, QUICK, MALE,
32	84036064	1	FILTER, (43,44,48)
33	84043200	2	GUIDE,
34	84057321	1	BRACKET, FRONT
34	84057297	1	BRACKET, BACK
35	15896221	4	NUT, M6, Cl 10,
36	412649	4	WASHER, SPRING, Belleville, M6,
37	120056	4	SCREW, Hex, M6 x 50, 8.8,
38	412439	2	BALL JOINT,
39	80120099	1	BOLT, Hex, M6 x 16, 8.8,
40	140015	1	WASHER,
41	353308	1	NUT, M6 x 1, Cl 8,
42	84053903	1	SUPPORT,

ONLY VALID FROM --1033001 AND FROM --1077001 (NOT TX68PLUS)

ссылка	Номер детали	Кол-во	Описание
43	84078366	1	FILTER, STRAINER,
44	84078367	1	TANK,
45	84064281	2	SUPPORT,
46	84064262	2	SET SCREW, Hex Soc, M6 x 8,
47	84064403	1	HOSE, FLEXIBLE,
48	84429771	1	COVER, ALU
18	16043224	AR	BOLT, Hex, M8 x 16, 8.8, Full Thd,

ONLY VALID FROM --1033001 AND FROM --1077001 (NOT TX68PLUS)

01.31B(01) BLOW-OFF SYSTEM : EXTENDED BLOW OFF KIT WITH ROTATING TUBES

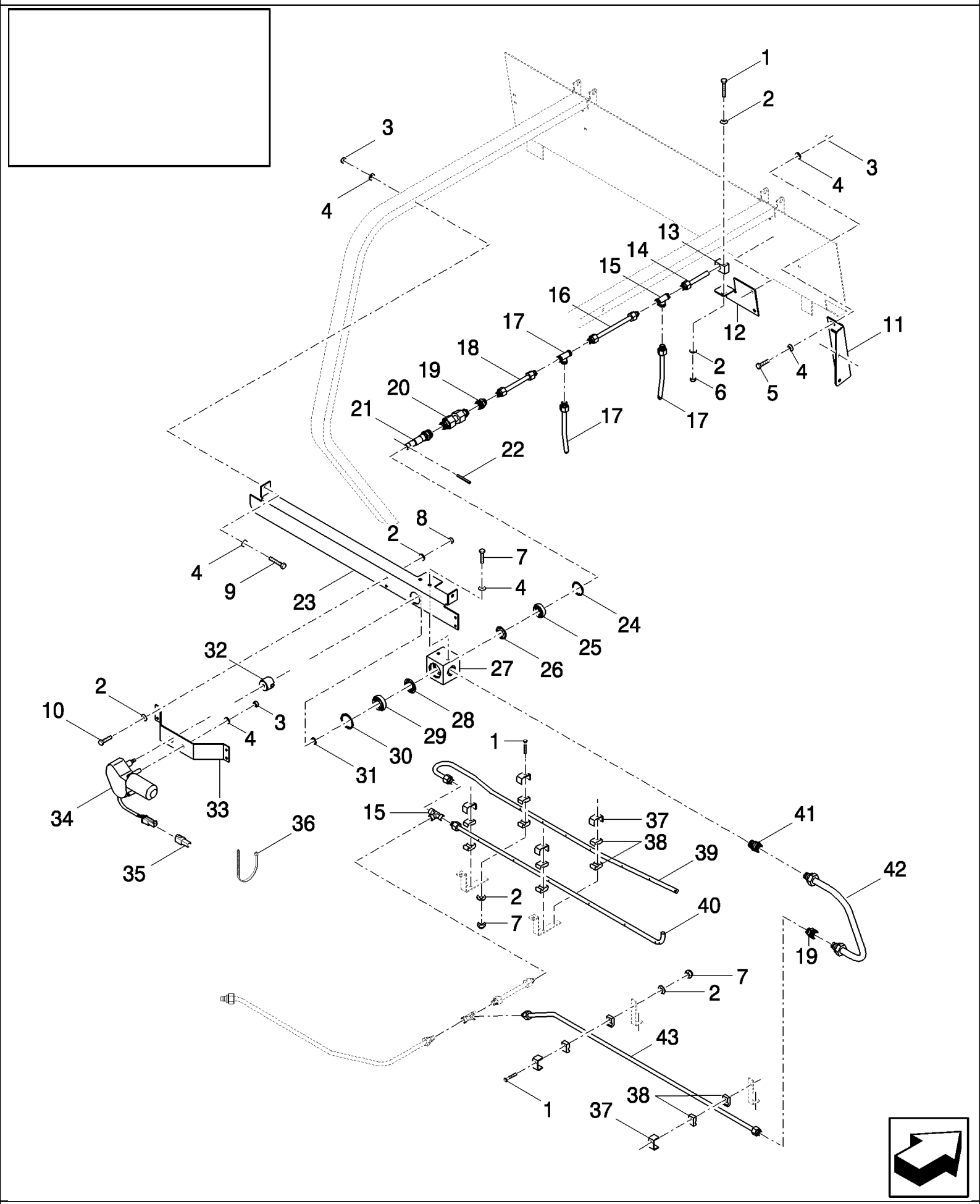

TX68 COMBINE - BASE UNIT

01.31B(01) BLOW-OFF SYSTEM : EXTENDED BLOW OFF KIT WITH ROTATING TUBES

ссылка	Номер детали	Кол-во	Описание
1	120056	7	SCREW, Hex, M6 x 50, 8.8,
2	322357	16	WASHER, SPRING, Belleville, M6,
3	89706690	5	NUT, M8, Cl 8,
4	322358	11	WASHER, SPRING, Belleville, M8,
5	43127	2	BOLT, Hex, M8 x 25, 8.8,
6	353308	7	NUT, M6 x 1, Cl 8,
8	15896221	4	NUT, M6, Cl 10,
9	412108	2	SCREW, Hex, M8 x 70, 8.8, Full Thd, M8x70
10	120100	4	BOLT, Hex, M6 x 20, 8.8,
11	84439178	1	SUPPORT,
12	84439180	1	SUPPORT,
13	84439177	1	GUIDE,
14	84439174	1	SHAFT,
15	150019	3	CONNECTION, 3 WAY,
16	84439172	1	TUBE,
17	84439183	2	TUBE,
18	84439168	1	TUBE,
19	394374	2	CONNECTOR, HYD.,
20	84439167	1	TUBE,
21	84021292	1	CONNECTOR, HYD.,
22	9510330	1	PIN, ROLL,
23	84439182	1	SUPPORT,
24	300645	1	RING, SNAP, M42, Int,
25	300313	1	BEARING ASSY,
26	84021569	1	ELEMENT, SEALING,
27	84045379	1	HOUSING,
28	84021570	1	ELEMENT, SEALING,
29	727874	1	BEARING ASSY,
30	300647	1	RING, SNAP, M47, Int,
31	370016	1	RING, SNAP, M17, Ext,
32	84433726	1	BUSHING,
33	84052046	1	SUPPORT,
34	84056693	1	MOTOR, ELECTRIC,
35	84439438	1	HARNESS, WIRE,
36	368582	8	STRAP,
37	433101	6	SUPPORT,
38	433008	12	CLAMP,
39	84439150	1	TUBE,
40	84439154	1	TUBE,
41	9501819	1	CONNECTOR, HYD.,
42	84439163	1	TUBE,
43	84439158	1	TUBE,
7	16043224	2	BOLT, Hex, M8 x 16, 8.8, Full Thd,

FOR TX68 PLUS ONLY

01.32(01) AIR GUN

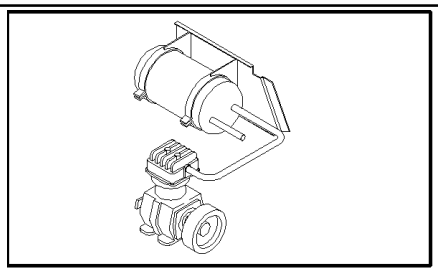

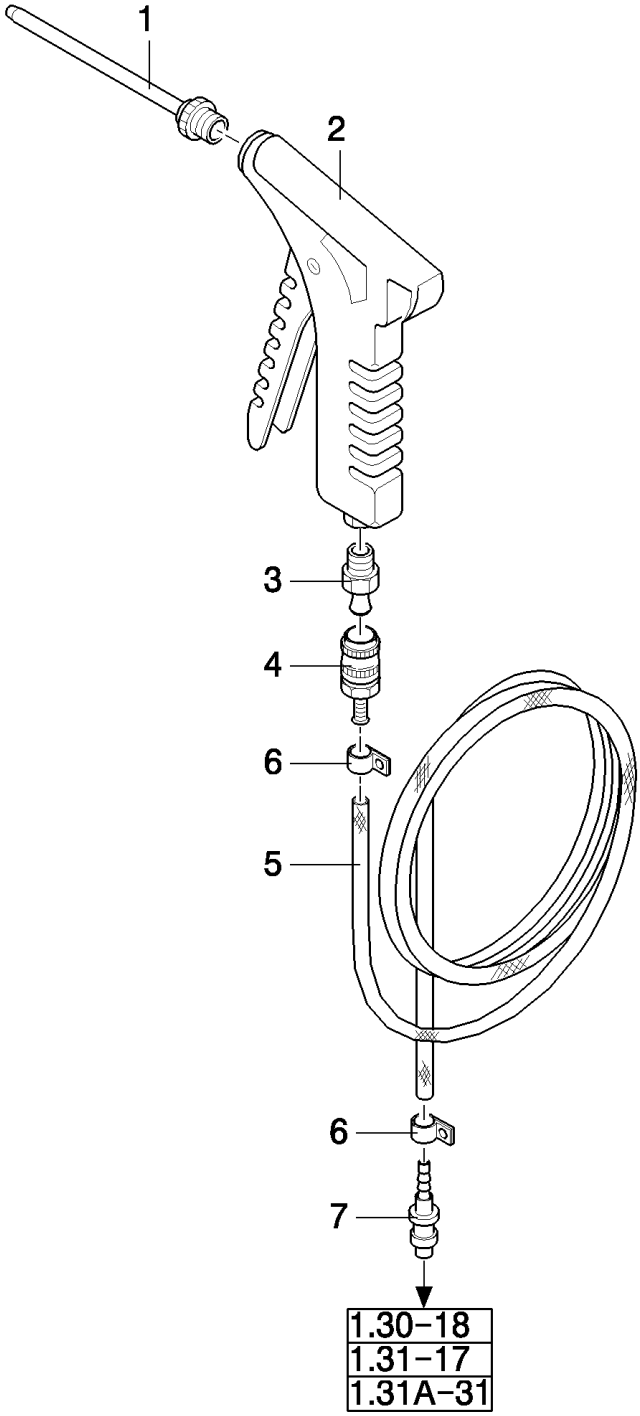

TX68 COMBINE - BASE UNIT

01.32(01) AIR GUN

ссылка	Номер детали	Кол-во	Описание
1	84043496	1	TUBE,
2	84043495	1	AIR GUN,
3	84043494	1	FITTING,
4	84043493	1	COUPLING, QUICK, MALE,
5	84045058	1	HOSE, L:25M
6	80150064	2	CLAMP,
7	84043492	1	FITTING,

01.33(01) COLD START

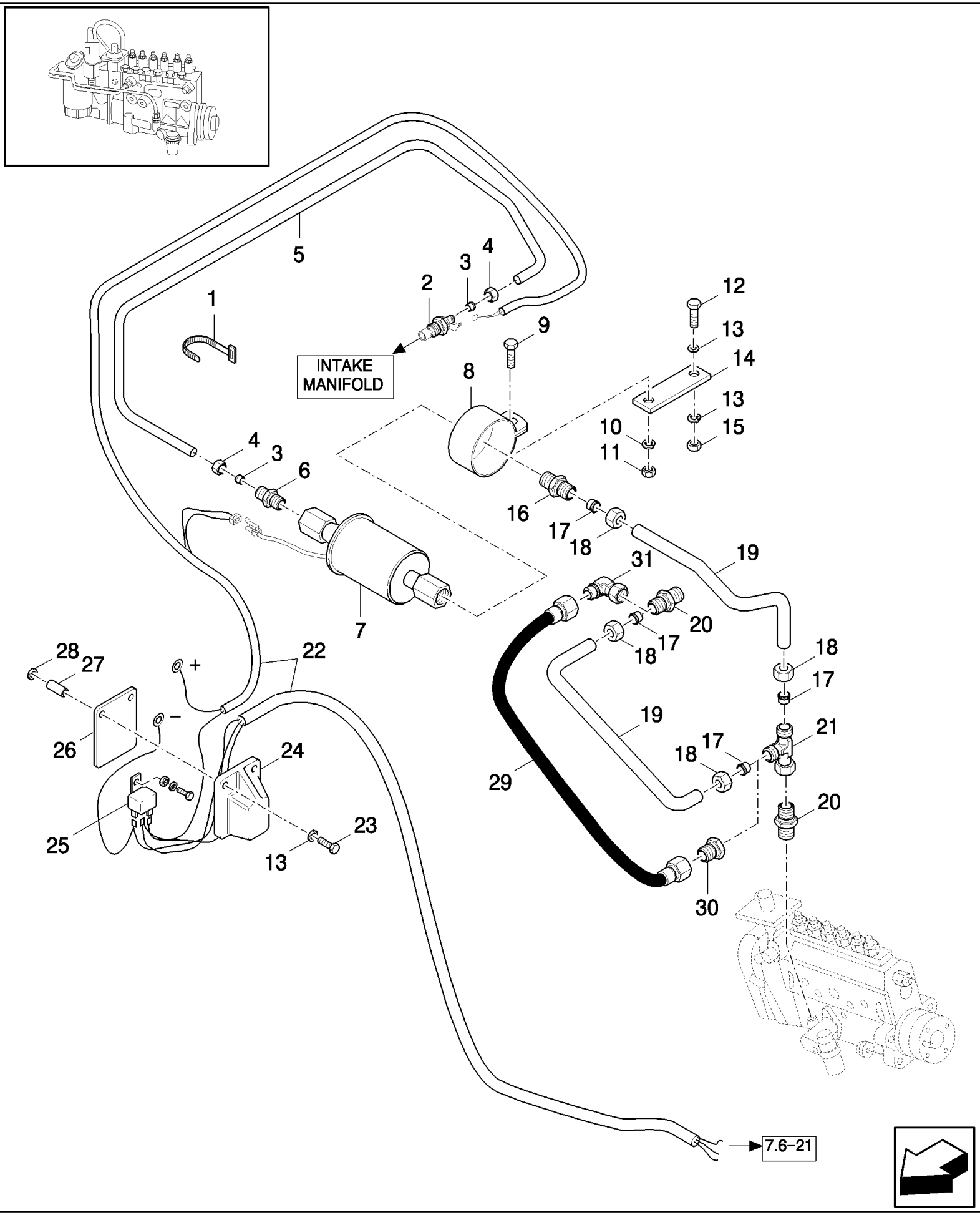

TX68 COMBINE - BASE UNIT

01.33(01) COLD START

ссылка	Номер детали	Кол-во	Описание
1	323597	AR	STRAP, CABLE, M9 x 165 or M5 x 197,
2	83956253	AR	THERMOSTART,
3	80381102	2	FERRULE,
4	80381101	2	NUT,
5	84032151	AR	TUBE, RIGID, DIA.:3/16",L:2M
6	86002635	1	CONNECTOR, HYD.,
7	86002636	1	PUMP, FUEL,
8	86002637	1	CLAMP,
9	43127	1	BOLT, Hex, M8 x 25, 8.8,
10	322358	1	WASHER, SPRING, Belleville, M8,
11	89706690	1	NUT, M8, Cl 8,
12	86977786	1	BOLT, Hex, M6 x 25, 8.8,
13	322357	3	WASHER, SPRING, Belleville, M6,
14	84076803	1	PLATE, , FOR TX63-64-65-66-68 ONLY
14	84431985	1	PLATE, , FOR TX62 ONLY
15	15896221	1	NUT, M6, Cl 10,
16	84076167	1	CONNECTOR, HYD.,
17	335136	AR	FERRULE,
18	335135	AR	NUT,
19	371540	AR	TUBE, RIGID, DIA.:8MM,L:2M
20	84076168	2	CONNECTOR, HYD.,
21	84064562	1	CONNECTOR, HYD.,
22	84076704	1	HARNESS, WIRE, , BSN C387
22	84458431	1	HARNESS, WIRE, , ASN D388
23	86508570	2	SCREW, Hex, M6 x 80, 8.8,
24	84000369	1	COVER,
25	84000651	1	RELAY,
26	84100650	1	PLATE,
27	80396877	2	TUBE, RIGID,
28	140015	2	WASHER, 6MM
29	84441293	1	HOSE, HYDRAULIC, , D1246-
30	84441294	1	CONNECTOR, HYD., , D1246-
31	84458556	1	ELBOW, , ASN D388

SECTIONS	**SECTIONS**	**SECCIONES**	**AFSNIT**
SEZIONI	**ABSCHNITTE**	**SECÇÕES**	**SECTIES**

SEC. 2

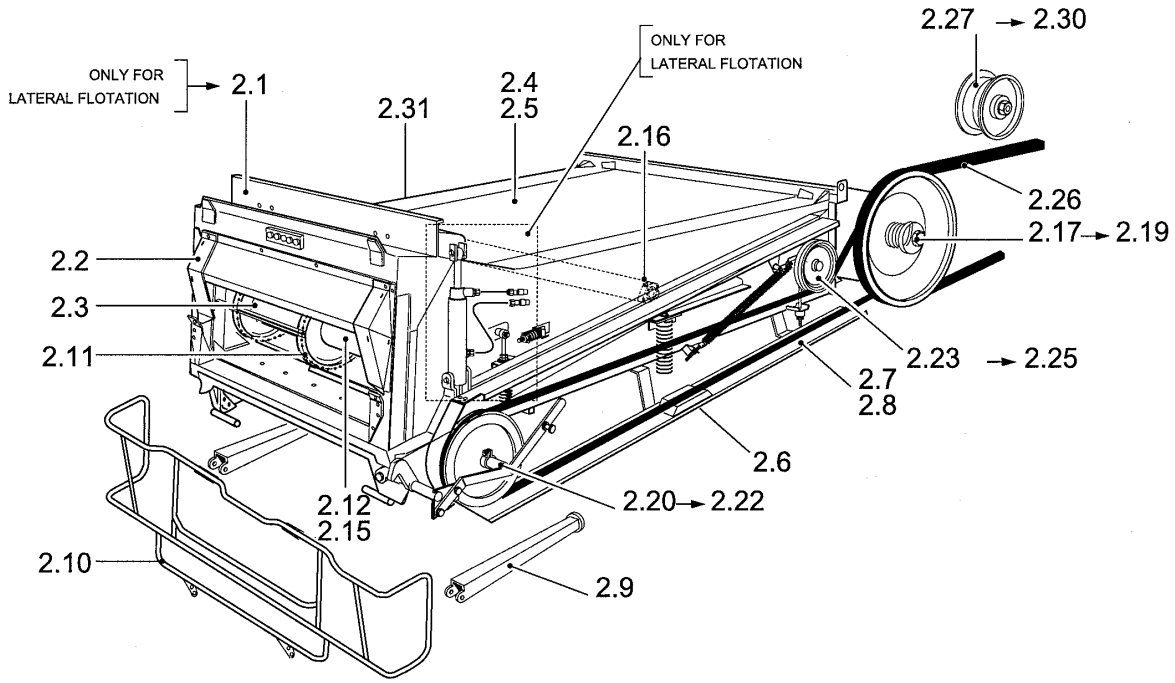

TX68 COMBINE - BASE UNIT

02.00(01) SECTION LIST 2

ссылка	Номер детали	Кол-во	Описание

02.01(01) BALANCE FRAME STRAW ELEVATOR

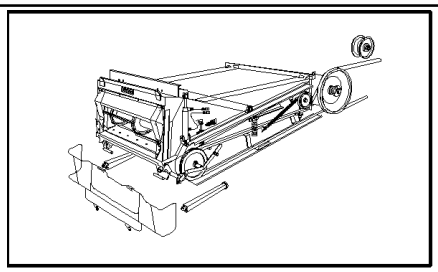

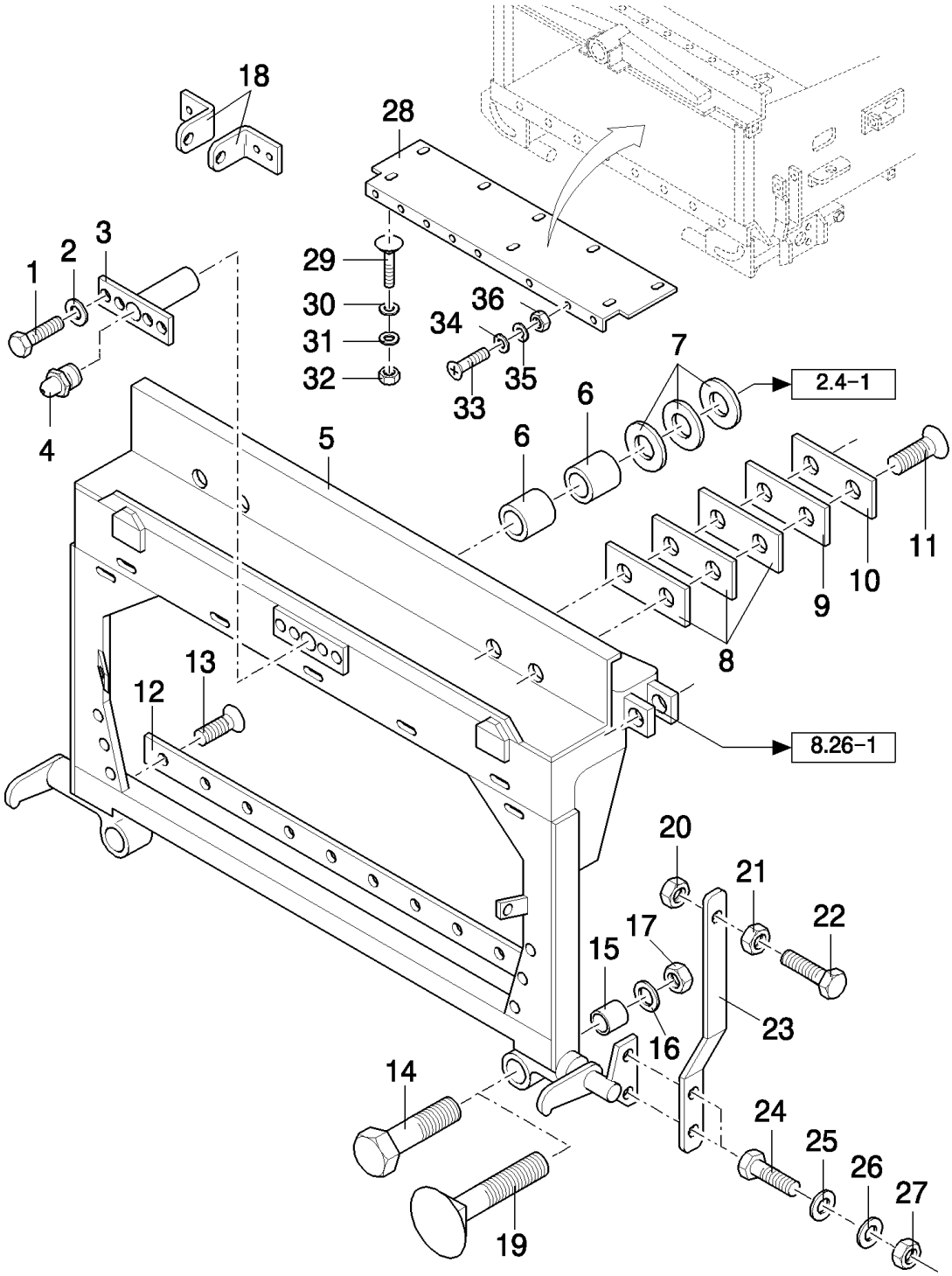

TX68 COMBINE - BASE UNIT

02.01(01) BALANCE FRAME STRAW ELEVATOR

ссылка	Номер детали	Кол-во	Описание
1	385922	4	SCREW, Hex, M16 x 45, 8.8,
2	140048	4	WASHER, SPRING, Belleville, M16,
3	9850040	1	PIN,
4	321204	1	NIPPLE, LUBE, M6 x 1, 16mm lg,
5	84014025	1	FRAME, , FOR TX66-67-68 ONLY, -C1245
5	84814051	1	FRAME, , FOR TX66-67-68 ONLY, D1246-
5	84001372	1	FRAME, , FOR TX63-64-65 ONLY, -C1245
5	84440319	1	FRAME, , FOR TX63-64-65 ONLY, D1246-
6	412365	2	SLEEVE,
7	9839046	3	WASHER, 35MM, -C7520
7	84018313	2	WASHER, , D7520-
8	9501115	6	PLATE, ADJUSTING,
9	84000062	2	SHIM,
10	753420	2	SEAL PROTECTION,
11	300498	4	SCREW, Hex Soc Flat Hd, M8 x 25, 10.9, M8x25
12	753419	1	SEAL PROTECTION, , FOR TX66-67-68 ONLY
12	9500985	1	SEAL PROTECTION, , FOR TX63-64-65 ONLY
13	120203	AR	SCREW, Hex Flat Hd, M8 x 20, 4.8,
14	374889	2	BOLT, Hex, M16 x 100, 8.8, , FOR TX66-67-68 ONLY
15	921237	2	BUSHING, , FOR TX63-64-65 ONLY
15	921237	2	BUSHING, , FOR TX66-67-68 ONLY, -C1056
15	84052730	2	BUSHING, , FOR TX66-67-68 ONLY, D1057-
16	913347	2	WASHER, 17MM
17	86000441	2	NUT, M16 x 2, Cl 8,
18	84004951	2	BRACKET,
19	300663	2	BOLT, CARRIAGE, Short NK, M16 x 120, Cl8.8, M16x120, FOR TX64-65 ONLY
20	337475	1	NUT, M12, Cl 10,
21	323238	1	NUT, Thin, M12 x 1.75, Cl 05, M12
22	337563	1	BOLT, Hex, M12 x 40, 10.9, Full Thd,
23	9831254	1	LEVER, , FOR TX66-68 ONLY, -C4540
23	84053893	1	LEVER, , FOR TX66-67-68 ONLY, D4540-
23	9832285	1	LEVER, , FOR TX63-64-65 ONLY, -C1245
23	84069821	1	LEVER, , FOR TX63-64-65 ONLY, D1246-
24	43168	1	BOLT, Hex, M16 x 40, 8.8,
25	378246	1	WASHER, 17MM
26	140048	2	WASHER, SPRING, Belleville, M16,
27	100020	2	NUT, M16, Cl 8,
28	921024	1	PLATE, , FOR TX66-67-68 ONLY, -C1193
28	84433394	1	PLATE, , FOR TX66-67-68 ONLY, D1194-
28	9500947	1	LID, , FOR TX63-64-65 ONLY, -C1193
28	84433385	1	PLATE, , FOR TX63-64-65 ONLY, D1194-
29	9706703	14	BOLT, CARRIAGE, Short NK, M6 x 20, Cl8.8, Full Thd,
30	140040	14	WASHER, M6 x 22 x 2,
31	322357	14	WASHER, SPRING, Belleville, M6,

TX68 COMBINE - BASE UNIT

02.01(01) BALANCE FRAME STRAW ELEVATOR

ссылка	Номер детали	Кол-во	Описание
32	15896221	14	NUT, M6, Cl 10,
33	393698	8	SCREW, Hex Soc Flat Hd, M10 x 25, 8.8, M10x25, -C1193
33	412495	8	SCREW, Hex Soc Flat Hd, M8 x 20, 8.8, M8x20, D1194-
34	378244	9	WASHER, M10, , -C1193
34	322358	9	WASHER, SPRING, Belleville, M8, , D1194-
35	140045	AR	WASHER, SPRING, Belleville, M10, , -C1193
36	100016	AR	NUT, M10, Cl 8, , -C1193
36	89706690	AR	NUT, M8, Cl 8, , D1194-

02.02(01) WEAR PLATES FOR LATERAL FLOTATION CONVEYOR

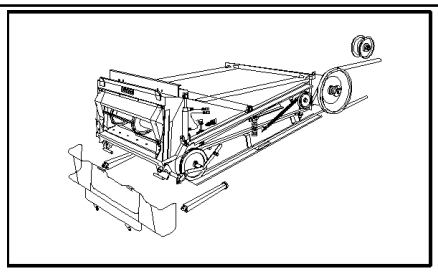

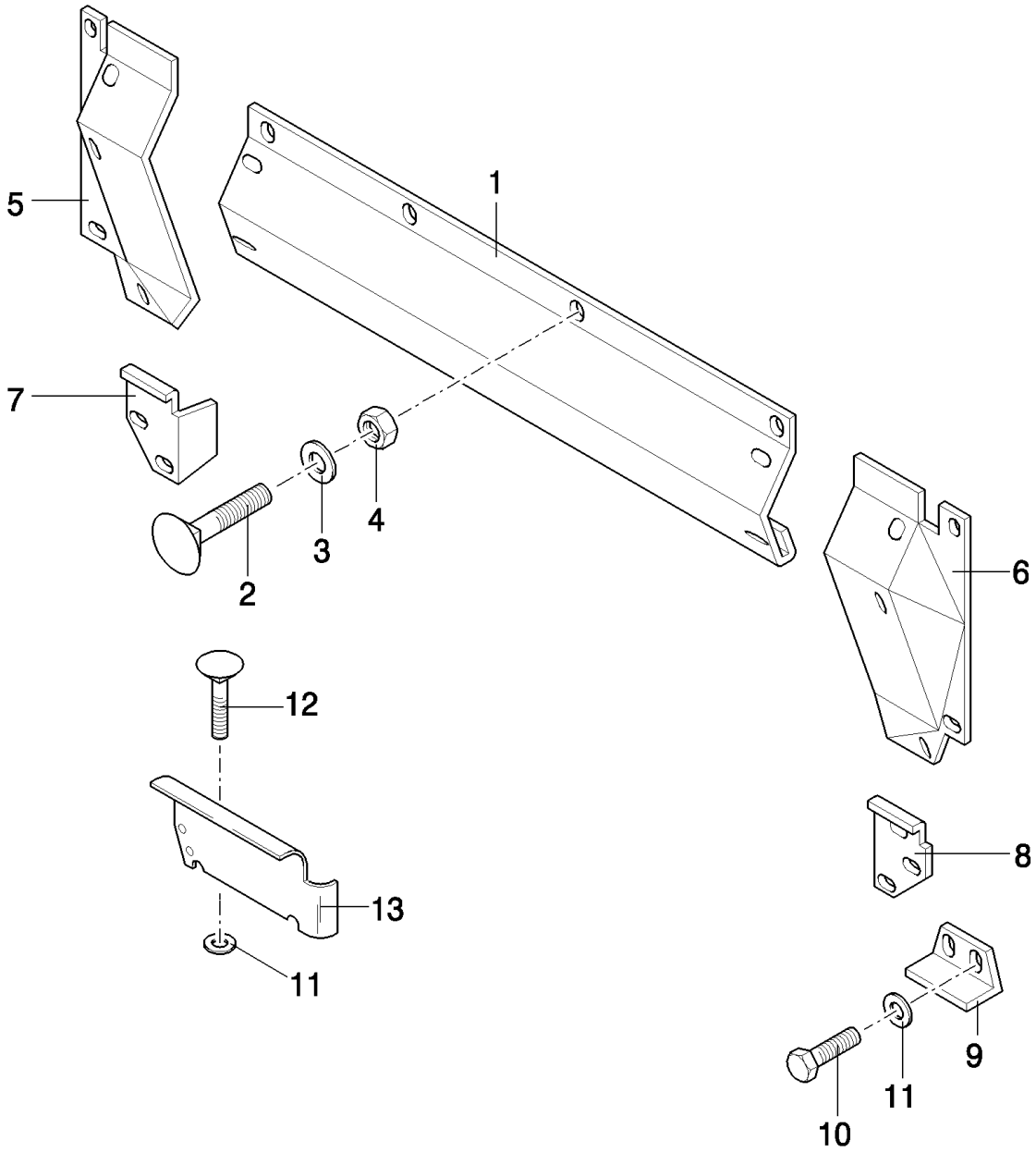

TX68 COMBINE - BASE UNIT

02.02(01) WEAR PLATES FOR LATERAL FLOTATION CONVEYOR

ссылка	Номер детали	Кол-во	Описание
1	84004926	1	DUST CAP, , FOR TX66-67-68 ONLY
1	89831463	1	COVER, , FOR TX63-64-65 ONLY
2	86512439	AR	SCREW, Short NK, M6 x 16, Cl8.8, Full Thd,
3	140040	AR	WASHER, M6 x 22 x 2,
4	353308	AR	NUT, M6 x 1, Cl 8,
5	9838915	1	COVER, RH, FOR TX66-68 ONLY, -C4510
5	84007971	1	COVER, RH, FOR TX66-67-68 ONLY, D4510-
5	84001365	1	COVER, RH, FOR TX63-64-65 ONLY
6	9838916	1	COVER, LH, FOR TX66-68 ONLY, -C4510
6	84007970	1	COVER, LH, FOR TX66-67-68 ONLY, D4510-
6	84001364	1	COVER, LH, FOR TX63-64-65 ONLY
7	921289	1	COVER, RH, FOR TX66-67-68 ONLY
7	9500851	1	PLATE, SKID, RH, FOR TX63-64-65 ONLY
7	918127	1	COVER, RH, FOR MACHINES WITHOUT LATERAL FLOTATION
8	921288	1	COVER, LH, FOR TX66-67-68 ONLY
8	9500852	1	PLATE, SKID, LH, FOR TX63-64-65 ONLY
8	918126	1	COVER, LH, FOR MACHINES WITHOUT LATERAL FLOTATION
9	9593081	2	ANGLE, , FOR TX63-64-65 ONLY
11	322358	6	WASHER, SPRING, Belleville, M8, , FOR TX63-64-65 ONLY
12	730335	2	BOLT, , FOR RICE ONLY
13	84002949	1	COVER, LH, FOR RICE ONLY, FOR TX66-67-68 ONLY
13	84002965	1	COVER, RH, FOR TX66-67-68 ONLY, FOR RICE ONLY
13	84002960	1	COVER, RH, FOR RICE ONLY, FOR TX63-64-65 ONLY
13	84002961	1	COVER, LH, FOR TX63-64-65 ONLY, FOR RICE ONLY
10	16043224	4	BOLT, Hex, M8 x 16, 8.8, Full Thd, , FOR TX63-64-65 ONLY

02.03(01) STRAW ELEVATOR WITH LATERAL FLOTATION

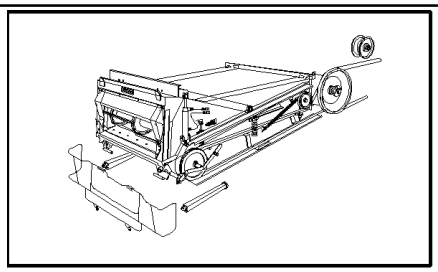

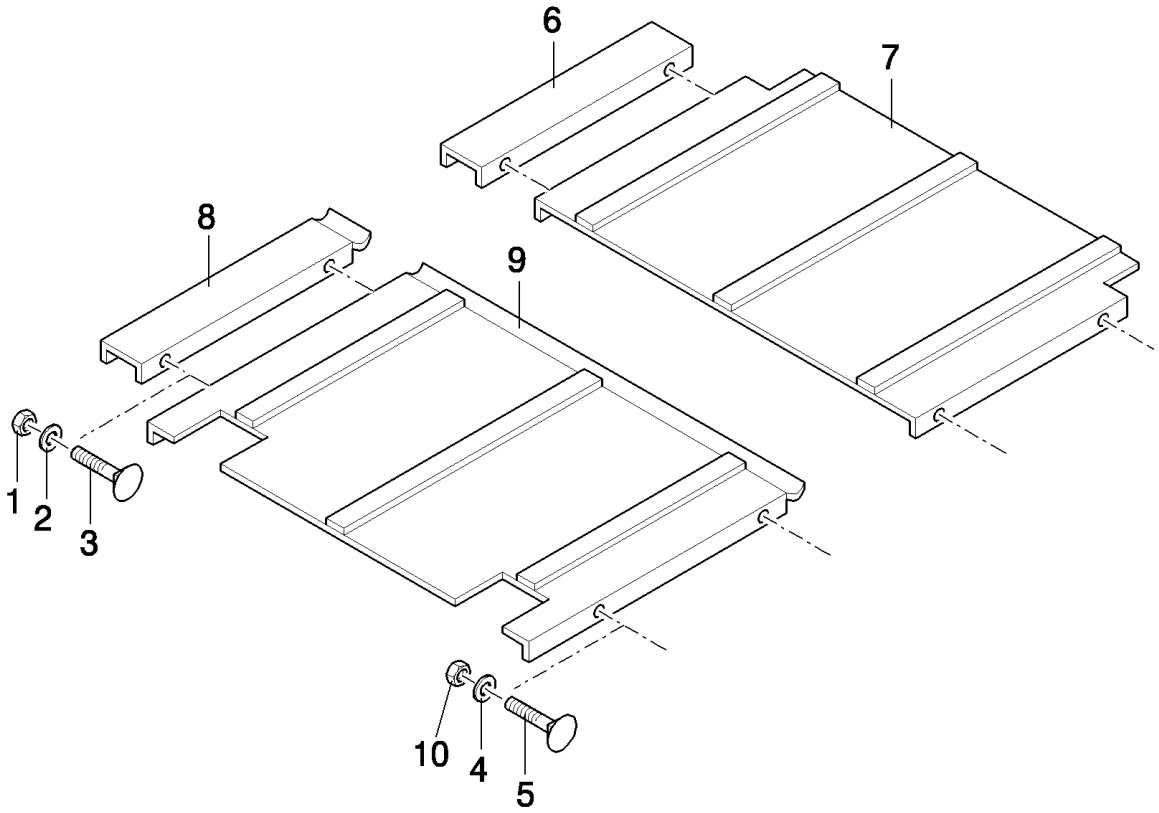

TX68 COMBINE - BASE UNIT

02.03(01) STRAW ELEVATOR WITH LATERAL FLOTATION

ссылка	Номер детали	Кол-во	Описание
1	9706690	AR	NUT, M8, Cl 8,
2	322358	AR	WASHER, SPRING, Belleville, M8,
3	86507486	AR	BOLT, CARRIAGE, Short NK, M8 x 20, Cl8.8, Full Thd,
4	140045	AR	WASHER, SPRING, Belleville, M10,
5	V43471	AR	BOLT, M10x20
6	9832291	1	PROFILE, , FOR TX66-68 ONLY, -C7520
6	84037860	1	PROFILE, , FOR TX66-67-68 ONLY, D7520-
7	9832290	1	PLATE, , FOR TX66-68 ONLY, -C5620
7	84017871	1	PLATE, , FOR TX66-68 ONLY, -C0027
7	84037862	1	PLATE, , FOR TX66-67-68 ONLY, D7520-
7	84007940	1	PLATE, , FOR TX64-65 ONLY, -C7520
7	84037859	1	PLATE, , FOR TX63-64-65 ONLY, D7520-
8	84004280	1	PROFILE, , FOR TX66-68 ONLY, -C4540
8	84018491	1	PROFILE, , FOR TX66-67-68 ONLY, D4540-
9	84004281	1	PLATE, , FOR TX66-68 ONLY, -C4540
9	84018493	1	PLATE, , FOR TX66-68 ONLY, -C0040
9	84017874	1	PLATE, , FOR TX66-67-68 ONLY, -C1241
9	84035308	1	PLATE, , FOR TX66-67-68 ONLY, D1242-
9	84007972	1	PLATE, , FOR TX63-64-65 ONLY
10	100016	AR	NUT, M10, Cl 8,

02.04(01) STRAW ELEVATOR WITH LATERAL FLOTATION AND WITHOUT FRONT FACE ADJUSTMENT

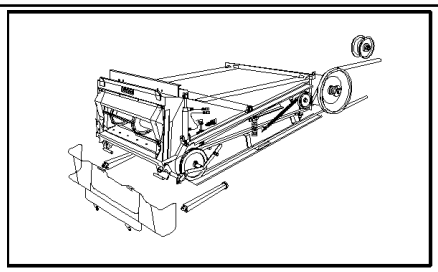

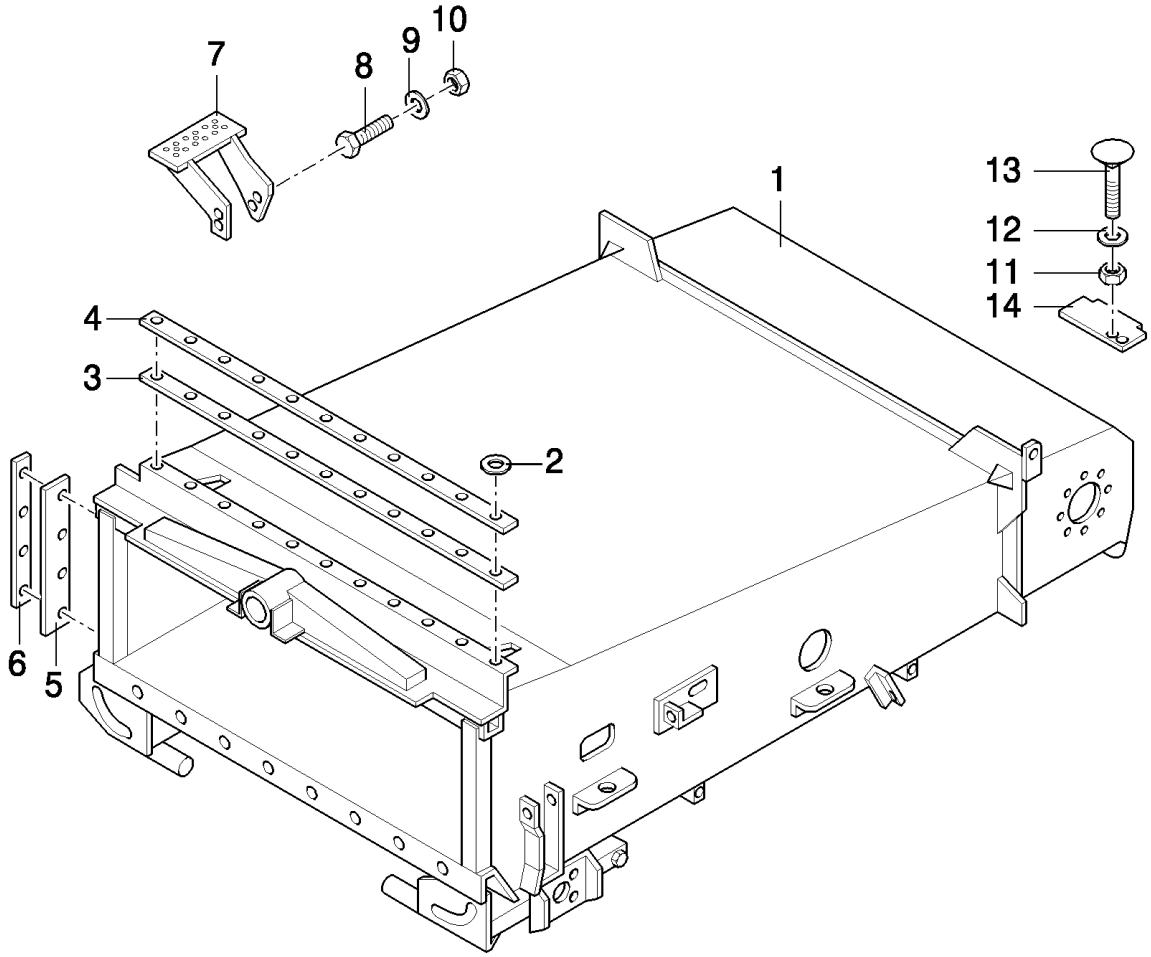

TX68 COMBINE - BASE UNIT

02.04(01) STRAW ELEVATOR WITH LATERAL FLOTATION AND WITHOUT FRONT FACE ADJUSTMENT

ссылка	Номер детали	Кол-во	Описание
1	84014002	1	CONVEYOR, , FOR TX66-68 ONLY, -C5620
1	84021173	1	CONVEYOR, , FOR TX66-68 ONLY, -C0027
1	84041889	1	CONVEYOR, , WITH OPEN BOTTOM, FOR TX66-67-68 ONLY, D7520-
1	84041888	1	CONVEYOR, , FOR TX66-67-68 ONLY, WITH CLOSED BOTTOM, D7520-
1	84007965	1	CONVEYOR, , FOR TX64-65 ONLY, -C7520
1	84043487	1	CONVEYOR, , WITH OPEN BOTTOM, FOR TX63-64-65 ONLY, D7520-
1	84043486	1	CONVEYOR, , FOR TX63-64-65 ONLY, WITH CLOSED BOTTOM, D7520-
2	140013	10	WASHER, M4,
3	921994	1	CANVAS, , FOR TX66-67-68 ONLY
3	89593162	1	CANVAS, , FOR TX63-64-65 ONLY
4	921993	1	PLATE, FIXING, , FOR TX66-67-68 ONLY
4	89593163	1	PLATE, FIXING, , FOR TX63-64-65 ONLY
5	84004265	2	SEAL, , FOR TX66-68 ONLY
6	84004264	2	SUPPORT, , FOR TX66-68 ONLY
7	84011755	1	STEP,
8	43140	4	BOLT, Hex, M10 x 30, 8.8, Full Thd,
9	140045	AR	WASHER, SPRING, Belleville, M10,
10	100016	AR	NUT, M10, Cl 8,
11	9706690	AR	NUT, M8, Cl 8,
12	322358	AR	WASHER, SPRING, Belleville, M8,
13	86507486	AR	BOLT, CARRIAGE, Short NK, M8 x 20, Cl8.8, Full Thd,
14	453444	2	PLATE, , FOR TX66-68 ONLY, -C5620
14	84017880	2	PLATE, , FOR TX66-68 ONLY, -C0027
14	918613	2	PLATE, , FOR TX64-65 ONLY, -C7520
14	84039237	2	PLATE, , FOR TX63-64-65 ONLY, -C0041
14	84074687	2	PLATE, , FOR TX63-64-65 ONLY, D1094-
14	84056080	2	PLATE, , -C0041
14	84062285	2	PLATE, , D1094-

02.04A(01) STRAW ELEVATOR WITH FRONT FACE ADJUSTMENT

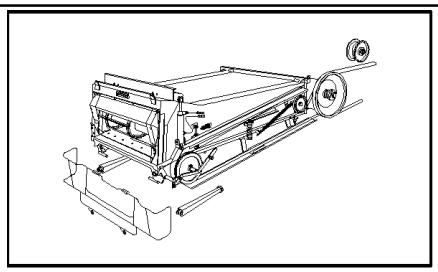

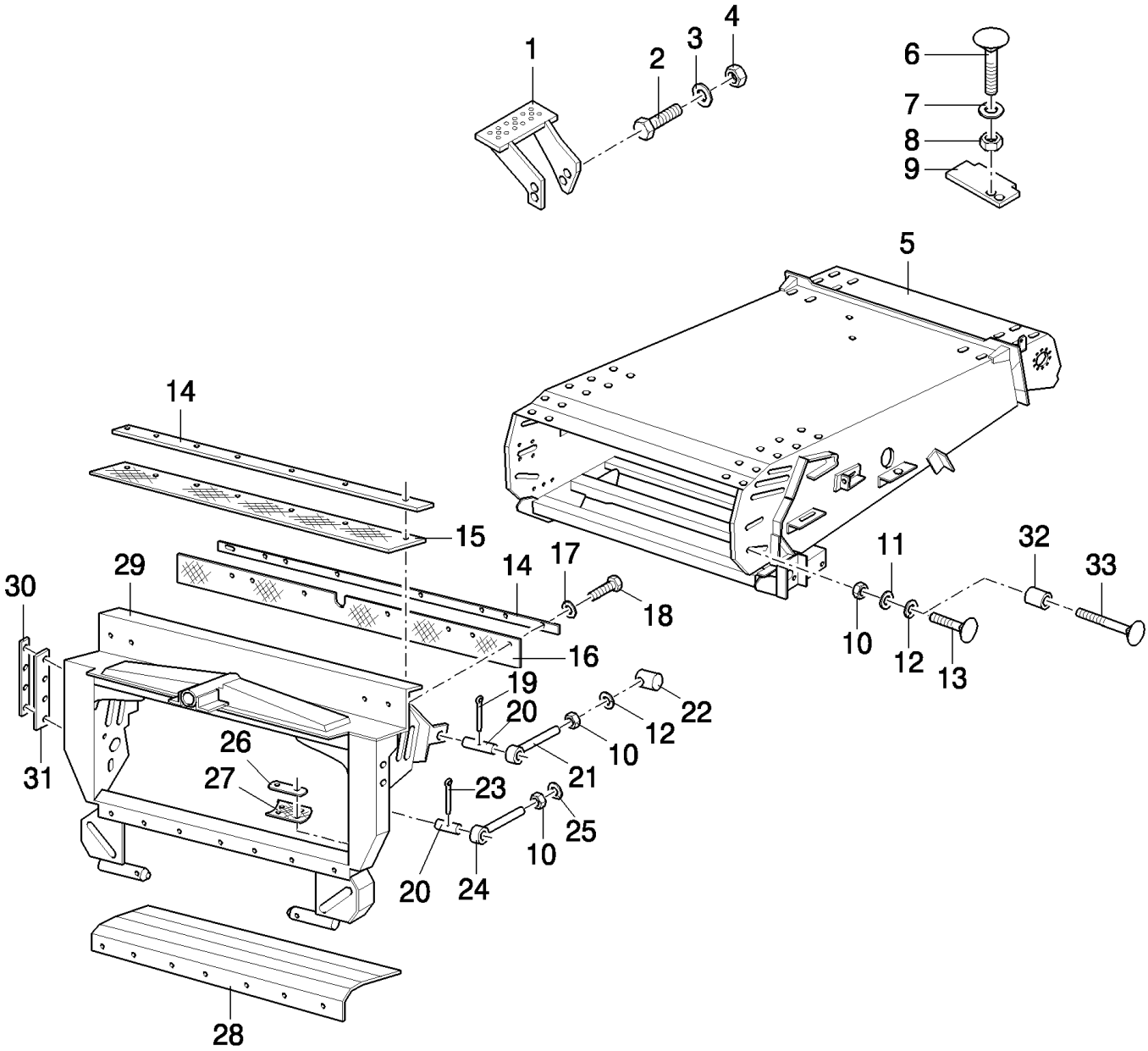

TX68 COMBINE - BASE UNIT

02.04A(01) STRAW ELEVATOR WITH FRONT FACE ADJUSTMENT

ссылка	Номер детали	Кол-во	Описание
1	84011755	1	STEP,
2	43140	4	BOLT, Hex, M10 x 30, 8.8, Full Thd,
3	140045	AR	WASHER, SPRING, Belleville, M10,
4	100016	AR	NUT, M10, Cl 8,
5	84035094	1	CONVEYOR, , WITH OPEN BOTTOM
5	84041421	1	CONVEYOR, , WITH CLOSED BOTTOM
6	86507486	AR	BOLT, CARRIAGE, Short NK, M8 x 20, Cl8.8, Full Thd,
7	322358	AR	WASHER, SPRING, Belleville, M8,
8	9706690	AR	NUT, M8, Cl 8,
9	84056080	2	PLATE, , -C1063
9	84062285	2	PLATE, , D1064-
10	100020	2	NUT, M16, Cl 8,
11	140048	2	WASHER, SPRING, Belleville, M16, , -C1193
11	86589278	AR	WASHER, SPRING, , D1194-
12	333040	4	WASHER, , -C1193
13	412185	2	BOLT, CARRIAGE, Short NK, M16 x 50, Cl8.8, Full Thd,
14	921993	2	PLATE, FIXING,
15	921994	1	CANVAS,
16	84035238	1	CANVAS,
17	140014	AR	WASHER, M5 x 10 x 1,
18	80445395	AR	RIVET,
19	130011	2	PIN, SPLIT (COTTER), M5 x 40,
20	9500537	2	PIN,
21	9506371	2	EYEBOLT, , -C1193
21	84077745	2	EYEBOLT, , D1194-
22	9500556	2	SHAFT,
23	300423	2	PIN, SPLIT (COTTER), M6.3 x 50,
24	9506370	2	ROD,
25	325594	2	WASHER,
26	9500511	2	PLATE,
27	9500510	2	CANVAS,
28	84035214	1	PLATE, , -C1193
28	84433376	1	PLATE, , D1194-
29	84041387	1	FRAME,
30	84004264	2	SUPPORT,
31	84004265	2	SEAL,
32	80412421	AR	M16x70
33	355392	AR	SPACER,

02.06(01) STANDARD AND PERFORATED CONVEYOR BOTTOMS STRAW ELEVATOR

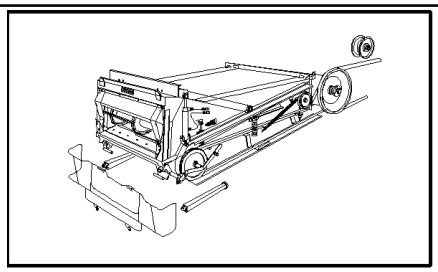

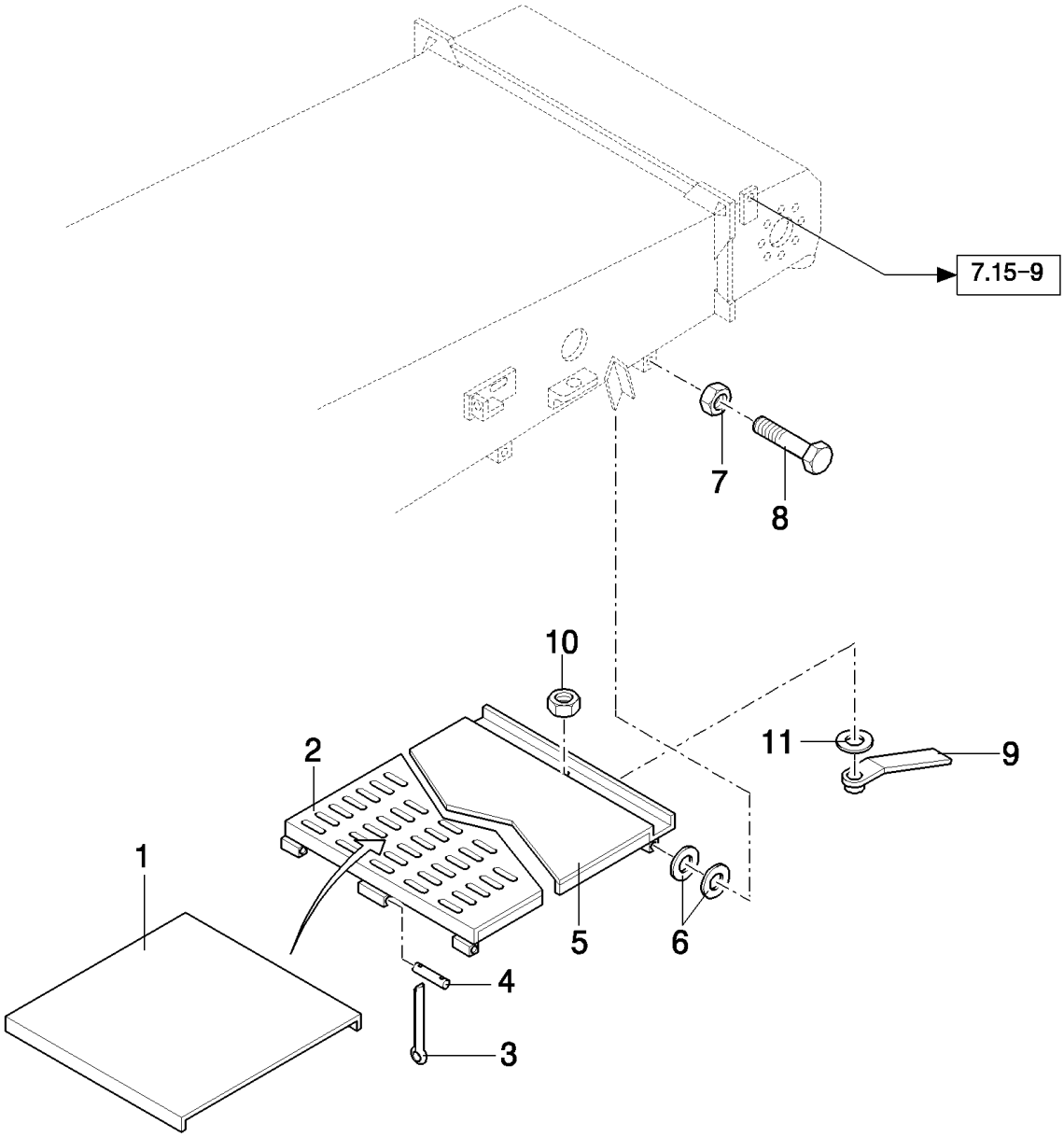

TX68 COMBINE - BASE UNIT

02.06(01) STANDARD AND PERFORATED CONVEYOR BOTTOMS STRAW ELEVATOR

ссылка	Номер детали	Кол-во	Описание
1	84001050	1	PLATE, , FOR TX66-67-68 ONLY
1	84001409	1	PLATE, , FOR TX62-63-64-65 ONLY
2	84001087	1	COVER, , FOR TX66-67-68 ONLY, PERFORATED
2	84001410	1	COVER, , PERFORATED, FOR TX62-63-64-65 ONLY
3	130007	2	PIN, SPLIT (COTTER), M4 x 25,
4	356015	1	SPINDLE,
5	9593863	1	COVER, , FOR TX66-68 ONLY
5	84001248	1	COVER, , FOR TX62-63-64-65 ONLY
6	9513615	AR	WASHER, 16MM
7	86000441	4	NUT, M16 x 2, Cl 8,
8	321246	4	BOLT, Hex, M16 x 120, 8.8,
9	89593862	1	LEVER, , FOR TX66-68 ONLY, -C4540
9	84018386	1	LEVER, , FOR TX66-67-68 ONLY, D4540-
9	89593862	1	LEVER, , FOR TX62-64-65 ONLY, -C7520
9	84018386	1	LEVER, , FOR TX62-63-64-65 ONLY, D7520-
10	100037	1	NUT, M10 x 1.5, Cl 8,
11	378244	1	WASHER, M10,

02.07(01) GUARDS

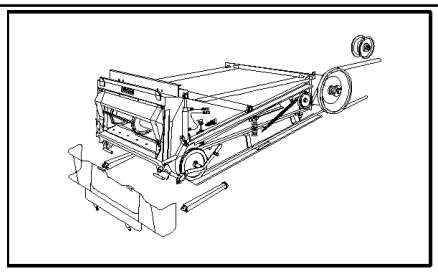

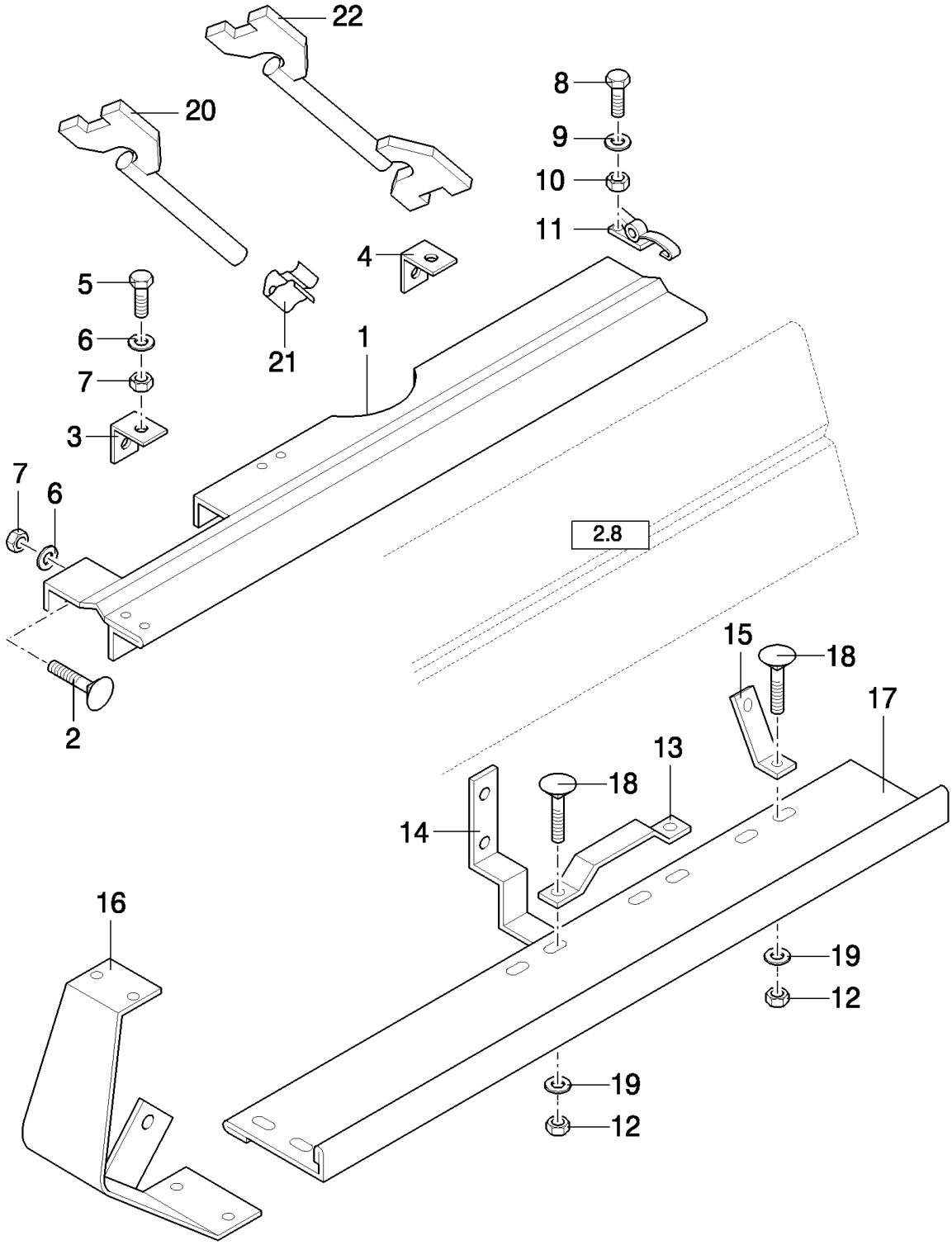

TX68 COMBINE - BASE UNIT

02.07(01) GUARDS

ссылка	Номер детали	Кол-во	Описание
1	9815350	1	SHIELD, , FOR TX66-68 ONLY, -C4540
1	84018605	1	SHIELD, , FOR TX66-67-68 ONLY, D4540-
1	84035299	1	SHIELD, , FOR FRONT FACE ADJUSTMENT (F.F.A.) ONLY, FOR TX67-68 ONLY
1	9815350	1	SHIELD, , FOR TX62-64-65 ONLY, -C7520
1	84018605	1	SHIELD, , FOR TX62-63-64-65 ONLY, WITH LATERAL FLOTATION, D7520-
1	84018499	1	SHIELD, , FOR TX62-63-64-65 ONLY, WITHOUT LATERAL FLOTATION, D7520-
2	86512446	1	BOLT, CARRIAGE, Short NK, M10 x 30, Cl8.8, Full Thd,
3	84004951	2	BRACKET,
4	9839216	1	BRACKET,
5	V43471	AR	BOLT, M10x20
6	140045	AR	WASHER, SPRING, Belleville, M10,
7	100016	AR	NUT, M10, Cl 8,
8	321803	4	SCREW, Cross Pan Hd, M4 x 10, M4x10
9	322355	4	WASHER, Belleville, M4,
10	100012	4	NUT, M4, Cl 8,
11	9817867	2	LOCK,
12	9706690	AR	NUT, M8, Cl 8,
13	84004143	1	BRACKET, , -C1245
13	84012394	1	GUIDE, , D1246-
14	9839213	1	BRACKET, , FOR TX66-68 ONLY, -C4540
14	84018498	1	BRACKET, , FOR TX66-67-68 ONLY, D4540-
14	9839213	1	BRACKET, , FOR TX62-64-65 ONLY, -C7520
14	84018498	1	BRACKET, , FOR TX62-63-64-65 ONLY, D7520-
15	9815347	1	BRACKET,
16	9815346	1	SHIELD, , -C7520
16	84043028	1	SHIELD, , D7520-
16	84043029	1	SHIELD, , -C1246
17	9815349	1	SHIELD,
18	86507486	AR	BOLT, CARRIAGE, Short NK, M8 x 20, Cl8.8, Full Thd,
19	322358	AR	WASHER, SPRING, Belleville, M8,
20	84015405	1	KEY, LOCK,
21	323307	1	CLAMP,
22	84068249	1	KEY, LOCK, , D1077-

02.08(01) GUARDS

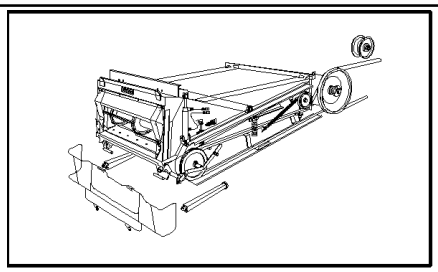

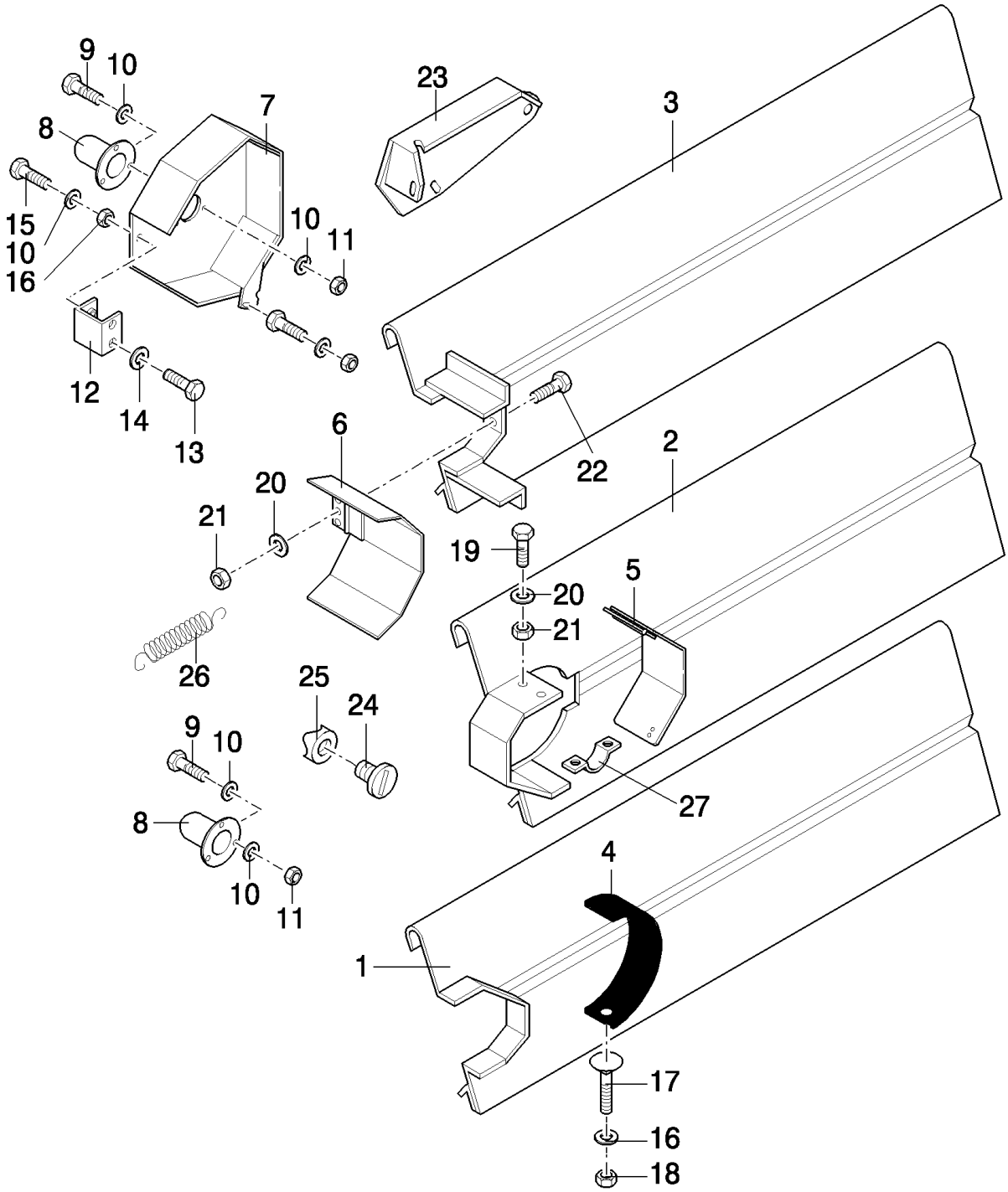

TX68 COMBINE - BASE UNIT

02.08(01) GUARDS

ссылка	Номер детали	Кол-во	Описание
1	9815352	1	SHIELD, , FOR TX66-68 ONLY, -C4540
1	84018602	1	SHIELD, , FOR TX66-67-68 ONLY, D4540-
1	84442492	1	SHIELD, , FOR TX66-67-68 ONLY, D1274-
2	84018602	1	SHIELD, , FOR TX63-64-65 ONLY, -C1273
2	84442492	1	SHIELD, , FOR TX63-64-65 ONLY, D1274-
3	84018304	1	COVER, , FOR TX62-63-64-65 ONLY, WITHOUT LATERAL FLOTATION
4	9831459	1	GUARD, , FOR TX66-68 ONLY, -C4540
5	84018415	1	SHIELD, , FOR TX63-64-65 ONLY, -C1273
5	84442494	1	SHIELD, , FOR TX63-64-65 ONLY, D1274-
5	84018415	1	SHIELD, , FOR TX66-67-68 ONLY, D4540-
5	84442494	1	SHIELD, , FOR TX66-67-68 ONLY, D1274-
6	84017733	1	COVER, , FOR TX62-63-64-65 ONLY, WITHOUT LATERAL FLOTATION
7	84012228	1	SHIELD, , WITHOUT LATERAL FLOTATION, FOR TX62-63-64-65 ONLY
8	334568	1	COVER,
9	43127	3	BOLT, Hex, M8 x 25, 8.8,
10	322358	8	WASHER, SPRING, Belleville, M8,
11	9706690	3	NUT, M8, Cl 8,
12	84011435	1	SUPPORT, , WITHOUT LATERAL FLOTATION, FOR TX62-64-65 ONLY
13	9706687	2	SCREW, Hex, M12 x 30, 8.8,
14	140046	2	WASHER, Belleville, M12,
15	120104	1	SCREW, Hex, M8 x 20, 8.8,
16	140041	4	WASHER, M8 x 28 x 3,
17	86507486	3	BOLT, CARRIAGE, Short NK, M8 x 20, Cl8.8, Full Thd,
18	86629542	3	NUT, LOCK, M8 x 1.25, Cl 8,
19	378056	2	BOLT, Hex, M6 x 10, 8.8, Full Thd,
20	322357	2	WASHER, SPRING, Belleville, M6,
21	15896221	2	NUT, M6, Cl 10,
22	80120099	2	BOLT, Hex, M6 x 16, 8.8,
23	84032915	1	SHIELD,
24	89514603	2	LOCK,
25	9514605	2	WASHER,
26	326307	1	SPRING,
27	9801069	1	LATCH, , D4540-

02.09(01) SAFETY DEVICES ON ELEVATOR CYLINDERS

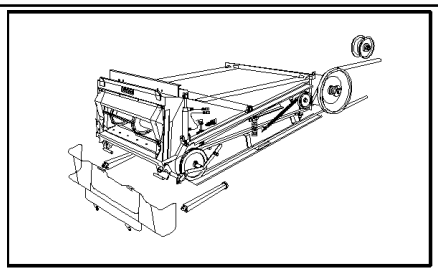

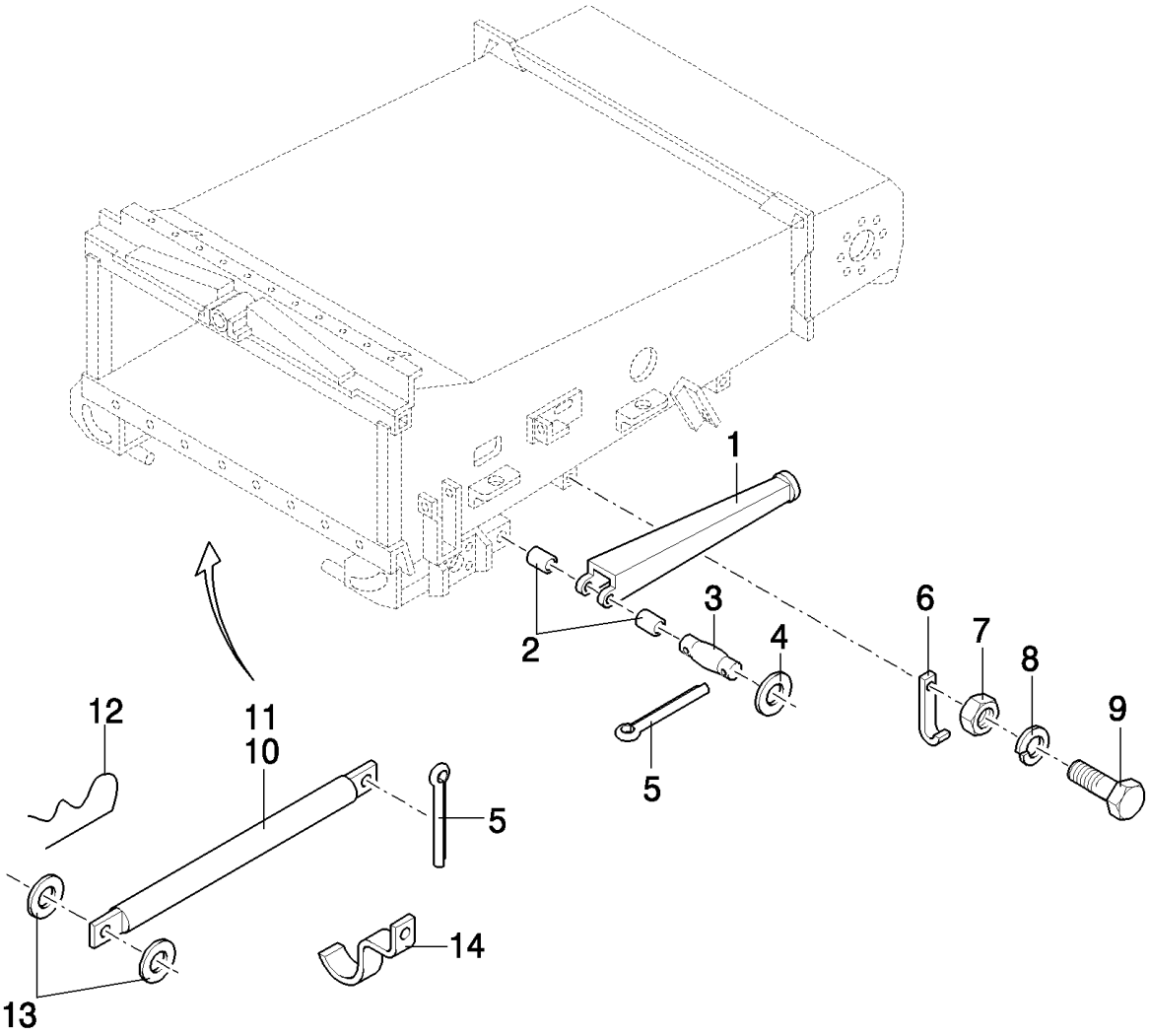

TX68 COMBINE - BASE UNIT

02.09(01) SAFETY DEVICES ON ELEVATOR CYLINDERS

ссылка	Номер детали	Кол-во	Описание
1	84015607	1	SUPPORT, , -C1090
1	84068136	1	SUPPORT, , D1091-
2	9506696	2	BUSHING, RH
2	9506695	2	BUSHING, LH
3	9819902	2	PIN,
4	140103	AR	WASHER, 26MM
5	89515820	5	PIN, SPLIT (COTTER),
6	332672	1	HOOK,
7	15896221	1	NUT, M6, Cl 10,
8	322357	1	WASHER, SPRING, Belleville, M6,
9	120100	1	BOLT, Hex, M6 x 20, 8.8,
10	84004907	1	SUPPORT, , FOR CORN HEADER ONLY, FOR ITALY ONLY
11	9502281	1	SUPPORT, , FOR ITALY ONLY, FOR GRAIN HEADER ONLY
12	180043	1	PIN, SPLIT (COTTER), , FOR ITALY ONLY
13	140104	2	WASHER, 26MM, FOR ITALY ONLY
14	84005863	1	SUPPORT, , FOR ITALY ONLY, -C6620
14	84036833	1	SUPPORT, , FOR ITALY ONLY, D6620-

02.10(01) ELEVATOR SAFETY DEVICES, GERMANY

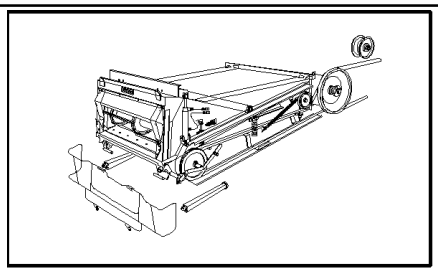

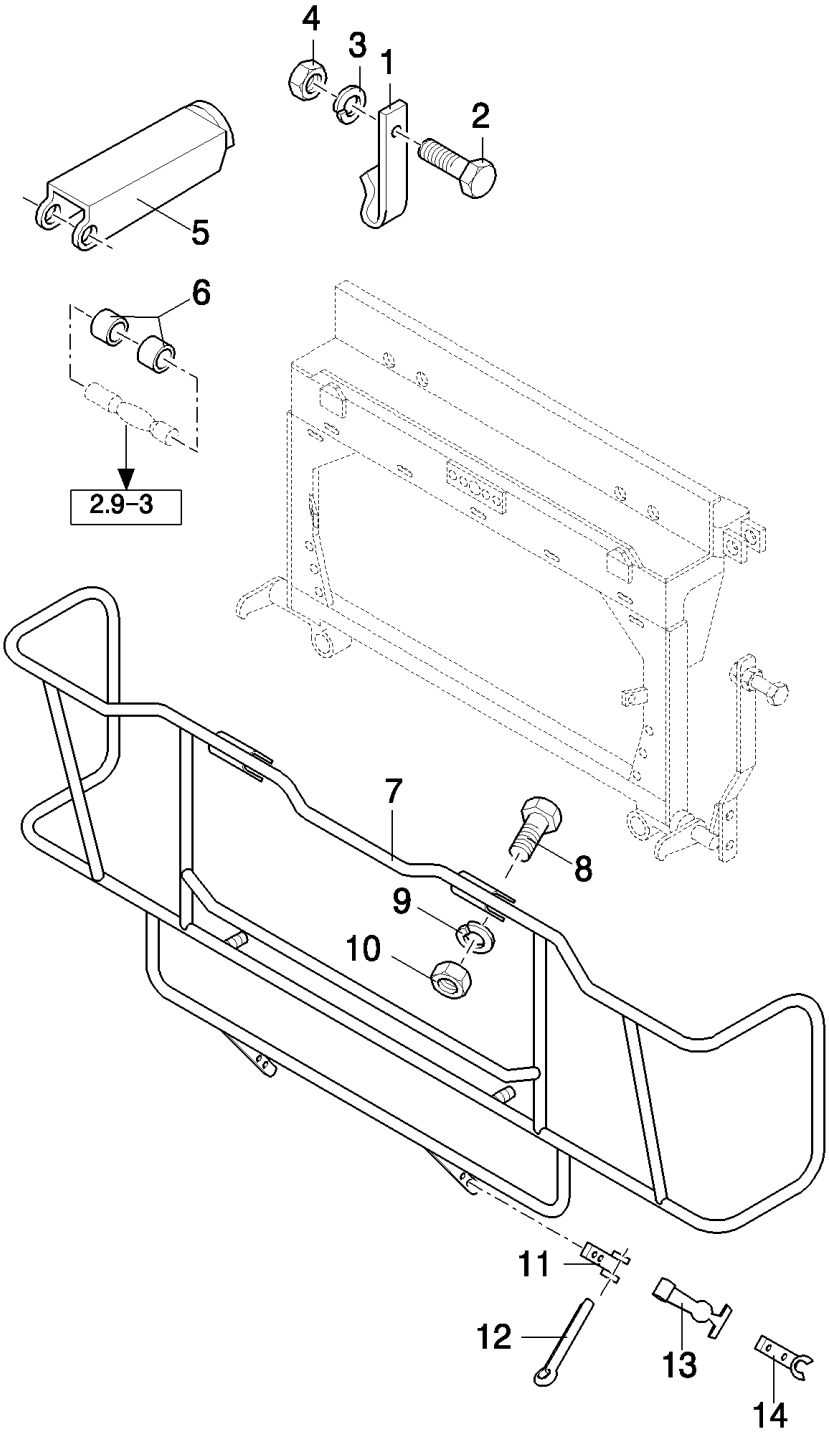

TX68 COMBINE - BASE UNIT

02.10(01) ELEVATOR SAFETY DEVICES, GERMANY

ссылка	Номер детали	Кол-во	Описание
1	332672	1	HOOK,
2	120100	1	BOLT, Hex, M6 x 20, 8.8,
3	322357	1	WASHER, SPRING, Belleville, M6,
4	15896221	1	NUT, M6, Cl 10,
5	84004909	1	SUPPORT, , -C1090
5	84068138	1	SUPPORT, , D1091-
5	84045064	1	SUPPORT, , WITH FLIP-UP CORN HEADER ONLY, -C1090
5	84068134	1	SUPPORT, , WITH FLIP-UP CORN HEADER ONLY, D1091-
6	9506695	2	BUSHING,
7	419643	1	SHIELD,
8	120061	2	BOLT, Hex, M8 x 60, 8.8,
9	322358	2	WASHER, SPRING, Belleville, M8,
10	9706690	2	NUT, M8, Cl 8,
11	350918	2	BRACKET,
12	300416	2	PIN, SPLIT (COTTER), M4 x 50,
13	353067	2	HANDLE,
14	453857	2	CLIP,

02.11(01) ELEVATOR CHAINS

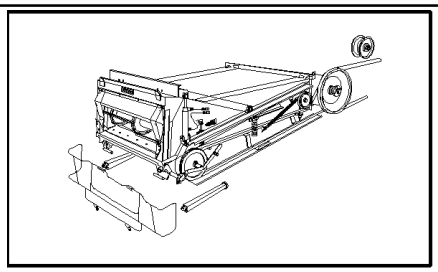

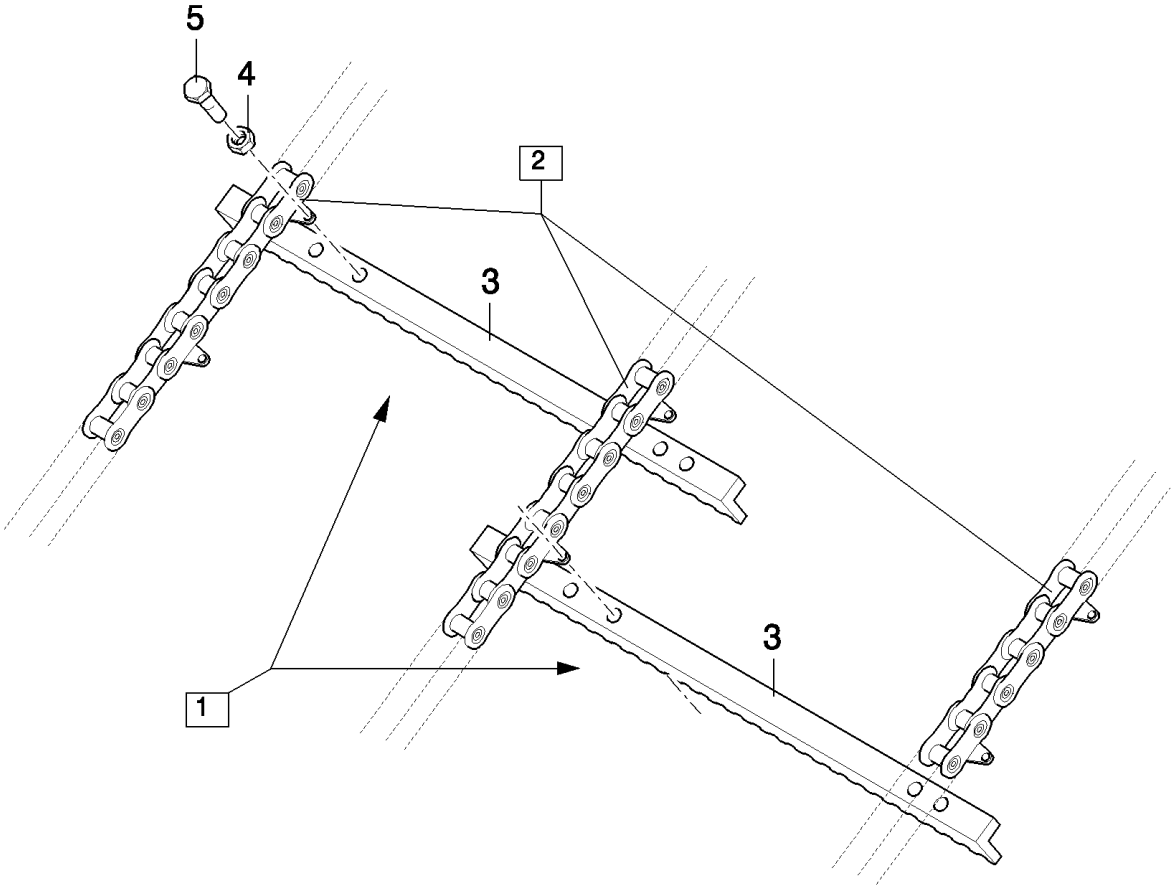

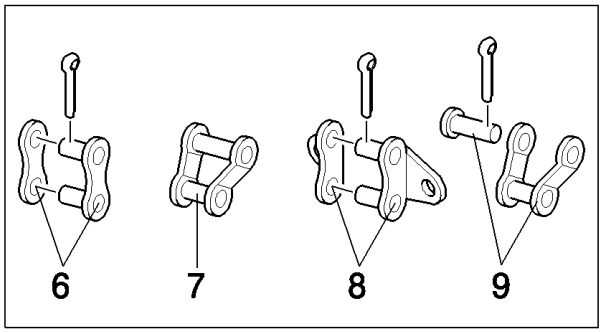

TX68 COMBINE - BASE UNIT

02.11(01) ELEVATOR CHAINS

ссылка	Номер детали	Кол-во	Описание
1	84019366	1	SET OF CHAINS, (2 to 9), FOR TX66-68 ONLY, -C5620
1	84021367	1	SET OF CHAINS, (2 to 9), FOR TX66-68 ONLY, -C0024
1	84042650	1	SET OF CHAINS, (2 to 9), FOR TX66-67-68 ONLY, D7520-
1	84042651	1	SET OF CHAINS, (2 to 9), FOR FRONT FACE ADJUSTMENT (F.F.A.) ONLY, FOR TX67-68 ONLY
1	84018539	1	SET OF CHAINS, (2 to 9), FOR TX63-64-65 ONLY
1	89814743	1	SET OF CHAINS, (2 to 9), FOR TX62-63-64-65 ONLY, WITHOUT LATERAL FLOTATION
2	9814649	1	SET OF CHAINS, (6 to 9), WITHOUT LATERAL FLOTATION, FOR TX62-63-64-65 ONLY
2	84018390	1	SET OF CHAINS, (6 to 9), FOR TX63-64-65 ONLY
2	84018390	1	SET OF CHAINS, (6 to 9), FOR TX66-68 ONLY, -C5620
2	84021366	1	SET OF CHAINS, (6 to 9), FOR TX66-67-68 ONLY, D5620-
2	84021174	1	SET OF CHAINS, (6 to 9), FOR FRONT FACE ADJUSTMENT (F.F.A.) ONLY, FOR TX67-68 ONLY
3	9815836	38	BAR, , FOR TX66-68 ONLY, -C5620
3	84017779	57	BAR, , FOR TX66-68 ONLY, -C0024
3	84042649	57	BAR, , FOR TX66-67-68 ONLY, D7520-
3	439178	38	BAR, , FOR TX62-63-64-65 ONLY
4	86629542	AR	NUT, LOCK, M8 x 1.25, Cl 8,
6	40241	AR	LINK, CONNECTING,
7	43278	AR	LINK, CHAIN,
8	9835830	AR	LINK, CONNECTING,
9	40242	AR	LINK, OFFSET,
5	16043224	AR	BOLT, Hex, M8 x 16, 8.8, Full Thd,

02.12(01) LOWER SHAFT WITH LATERAL FLOTATION

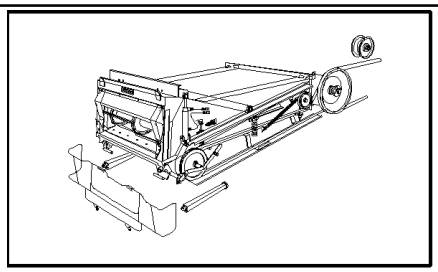

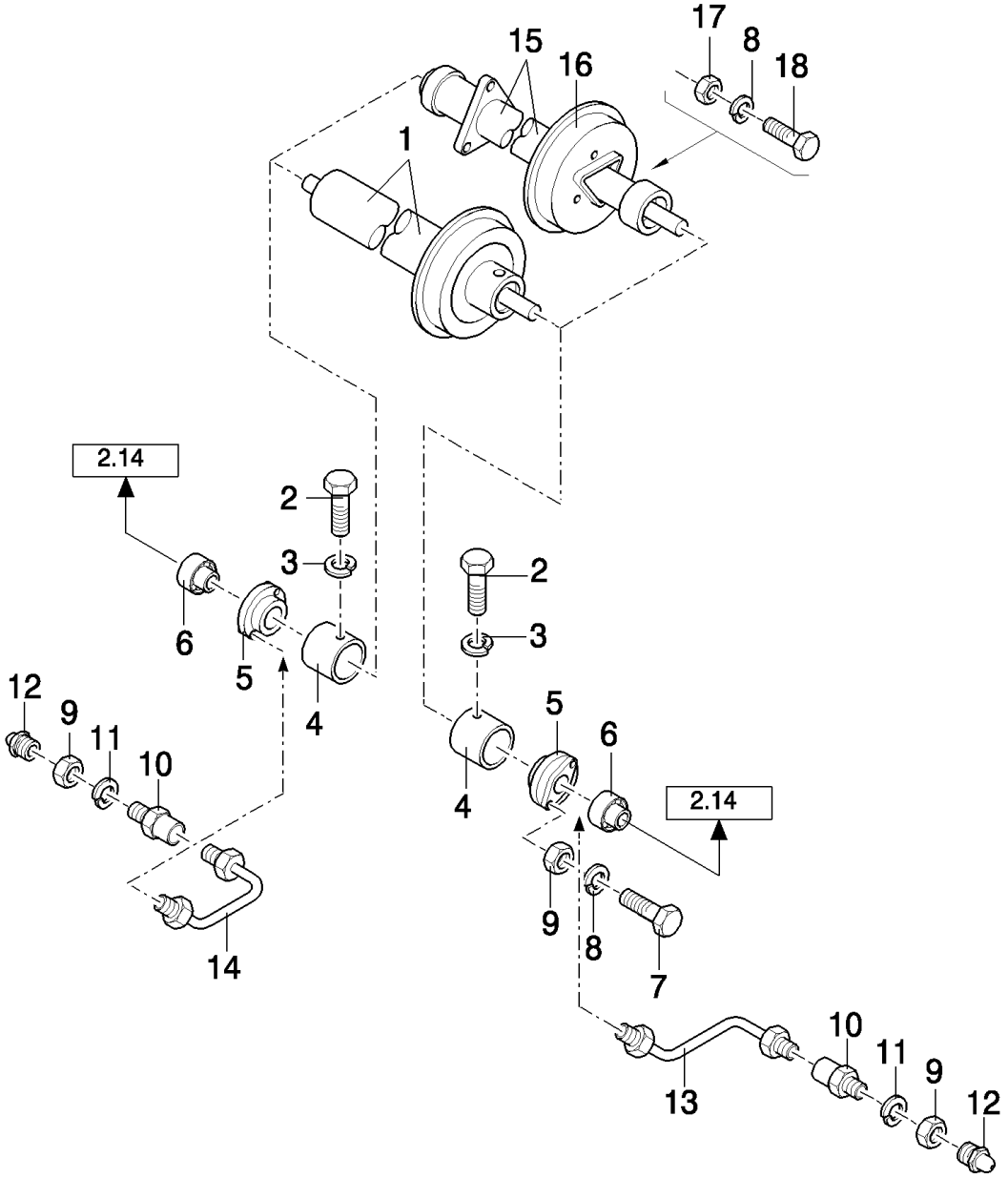

TX68 COMBINE - BASE UNIT

02.12(01) LOWER SHAFT WITH LATERAL FLOTATION

ссылка	Номер детали	Кол-во	Описание
1	9850030	1	ROLLER, CONVEYOR, , FOR TX66-68 ONLY, -C5620
1	84017777	1	ROLLER, CONVEYOR, , FOR TX66-68 ONLY, -C0027
1	84019694	1	ROLLER, CONVEYOR, , FOR TX66-67-68 ONLY, D7520-
1	84039499	1	ROLLER, CONVEYOR, , FOR FRONT FACE ADJUSTMENT (F.F.A.) ONLY, FOR TX67-68 ONLY
2	730335	6	BOLT, M8x30, FOR TX66-68 ONLY
3	322358	6	WASHER, SPRING, Belleville, M8, , FOR TX66-68 ONLY
4	9850027	2	HOSE, FLEXIBLE, , FOR TX66-68 ONLY, -C5620
4	84017881	2	TUBE, RIGID, , FOR TX66-68 ONLY, D5620-
5	84004218	2	HOUSING, , -C7520
5	84019209	2	FLANGE, , D7520-
6	84004118	2	BEARING ASSY, , -C7520
6	84019208	2	BEARING ASSY, , D7520-
7	120112	4	BOLT, Hex, M10 x 40, 8.8, Full Thd,
7	120069	4	SCREW, Hex, M10 x 50, 8.8,
8	140045	13	WASHER, SPRING, Belleville, M10,
9	100016	6	NUT, M10, Cl 8,
10	9510459	2	CONNECTOR, HYD.,
11	140045	2	WASHER, SPRING, Belleville, M10,
12	321204	2	NIPPLE, LUBE, M6 x 1, 16mm lg,
13	84004226	1	TUBE, RIGID, LH
13	84041200	1	TUBE, RIGID, LH, FOR TX67-68 ONLY, FOR FRONT FACE ADJUSTMENT (F.F.A.) ONLY
14	84004228	1	TUBE, RIGID, RH
14	84041199	1	TUBE, RIGID, RH, FOR FRONT FACE ADJUSTMENT (F.F.A.) ONLY, FOR TX67-68 ONLY
15	84011593	1	ROLLER, CONVEYOR, , FOR TX64-65 ONLY, -C7520
15	84019730	1	ROLLER, CONVEYOR, , FOR TX63-64-65 ONLY, D7520-
16	9503110	3	FLANGE, , FOR TX63-64-65 ONLY
17	11106231	9	BOLT, Hex, M10 x 25, 10.9, Full Thd, , FOR TX63-64-65 ONLY
18	100037	9	NUT, M10 x 1.5, Cl 8, , FOR TX63-64-65 ONLY

02.14(01) SUSPENSION BRACES WITH LATERAL FLOTATION

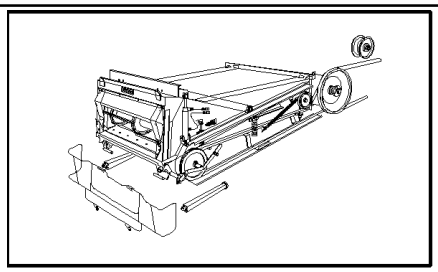

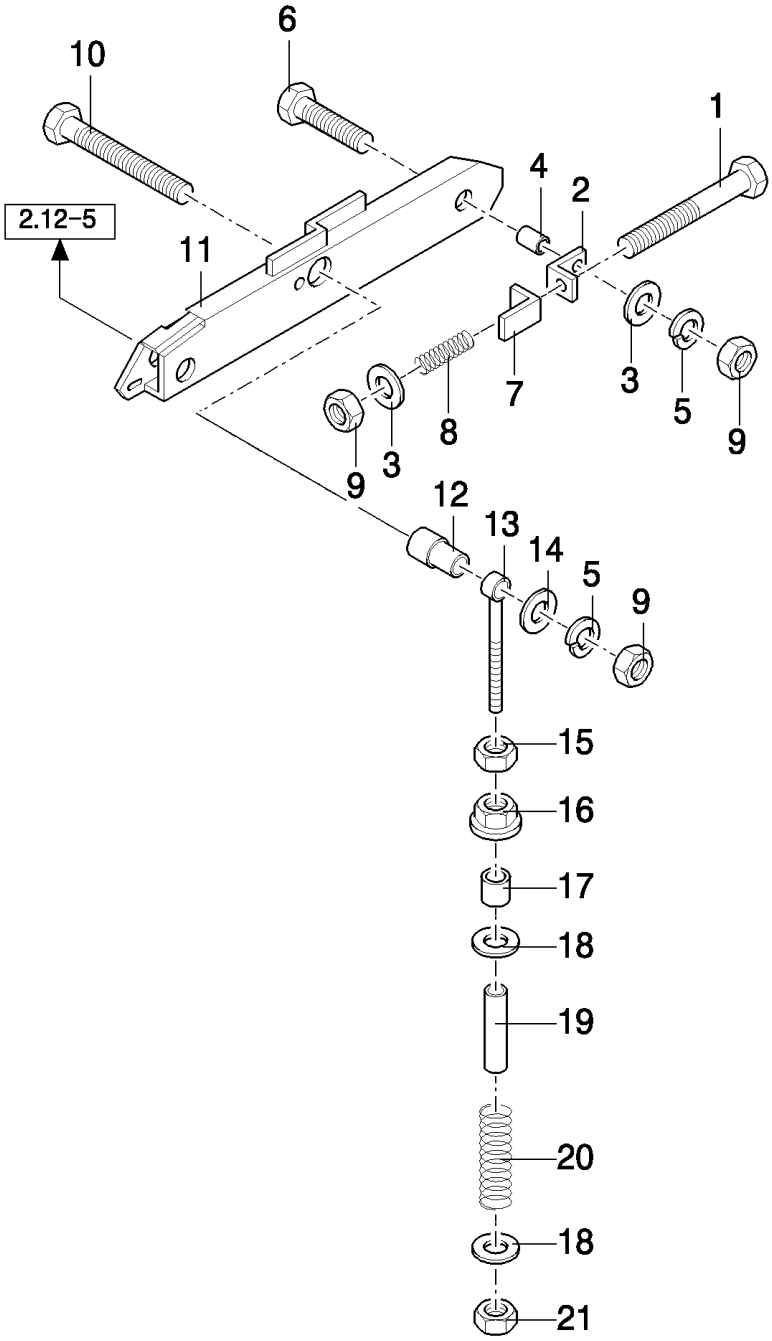

TX68 COMBINE - BASE UNIT

02.14(01) SUSPENSION BRACES WITH LATERAL FLOTATION

ссылка	Номер детали	Кол-во	Описание
1	412676	2	BOLT, Hex, M12 x 180, 10.9, M12x180
2	913641	2	BRACKET,
3	140085	4	WASHER, 13MM
4	921085	2	BUSHING,
5	140046	4	WASHER, Belleville, M12,
6	323121	2	BOLT, CARRIAGE, Short NK, M12 x 110, Cl8.8, M12x110, -C1315
6	84818450	2	BOLT, CARRIAGE, Short NK, M12 x 85, Cl8.8, , D1316-
7	921117	2	PLATE,
8	920487	2	SPRING,
9	100038	4	NUT, M12 x 1.75, Cl 8,
10	9819462	2	BOLT, CARRIAGE, Short NK, M12 x 135, Cl8.8, M12x135
10	84053391	2	BOLT, CARRIAGE, Short NK, M12 x 130, Cl8.8, M12x130
11	84015432	1	SUSPENSION, RH, FOR TX66-68 ONLY, -C4540
11	84018474	1	SUSPENSION, RH, FOR TX66-68 ONLY, -C0026
11	84015432	1	SUSPENSION, RH, FOR TX64-65 ONLY, -C7520
11	84041013	1	SUSPENSION, RH, D7520-
11	84041640	1	SUSPENSION, RH, FOR TX67-68 ONLY, FOR FRONT FACE ADJUSTMENT (F.F.A.) ONLY
11	84015433	1	SUSPENSION, LH, FOR TX66-68 ONLY, -C4540
11	84018475	1	SUSPENSION, LH, FOR TX66-68 ONLY, -C0026
11	84015433	1	SUSPENSION, LH, FOR TX64-65 ONLY, -C7520
11	84041011	1	SUSPENSION, LH, D7520-
11	84041639	1	SUSPENSION, LH, FOR TX67-68 ONLY, FOR FRONT FACE ADJUSTMENT (F.F.A.) ONLY
12	84014168	2	BUSHING, , FOR TX66-68 ONLY, -C4540
12	84018279	2	BUSHING, , FOR TX66-67-68 ONLY, D4540-
12	84014168	2	BUSHING, , FOR TX64-65 ONLY, -C7520
12	84018279	2	BUSHING, , FOR TX63-64-65 ONLY, D7520-
12	84041631	2	BUSHING, , FOR FRONT FACE ADJUSTMENT (F.F.A.) ONLY, FOR TX67-68 ONLY
13	9818820	2	EYEBOLT, M16x255, -C1113
13	84078289	2	BOLT, M16x255, D1114-
14	378245	2	WASHER, M12, 13MM
15	100020	2	NUT, M16, Cl 8,
16	921116	2	NUT, M16
17	9510502	2	DAMPER,
18	451743	4	WASHER, 16MM
19	921084	2	TUBE,
20	920397	2	SPRING,
21	412066	2	NUT, LOCK, M16 x 2, Cl 8, M10

02.16(01) GUIDE ROLL IN STRAW ELEVATOR

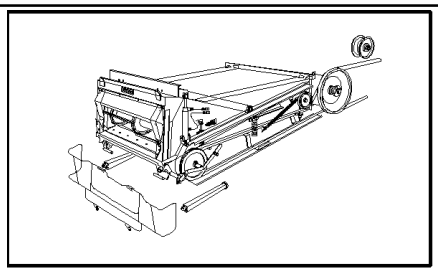

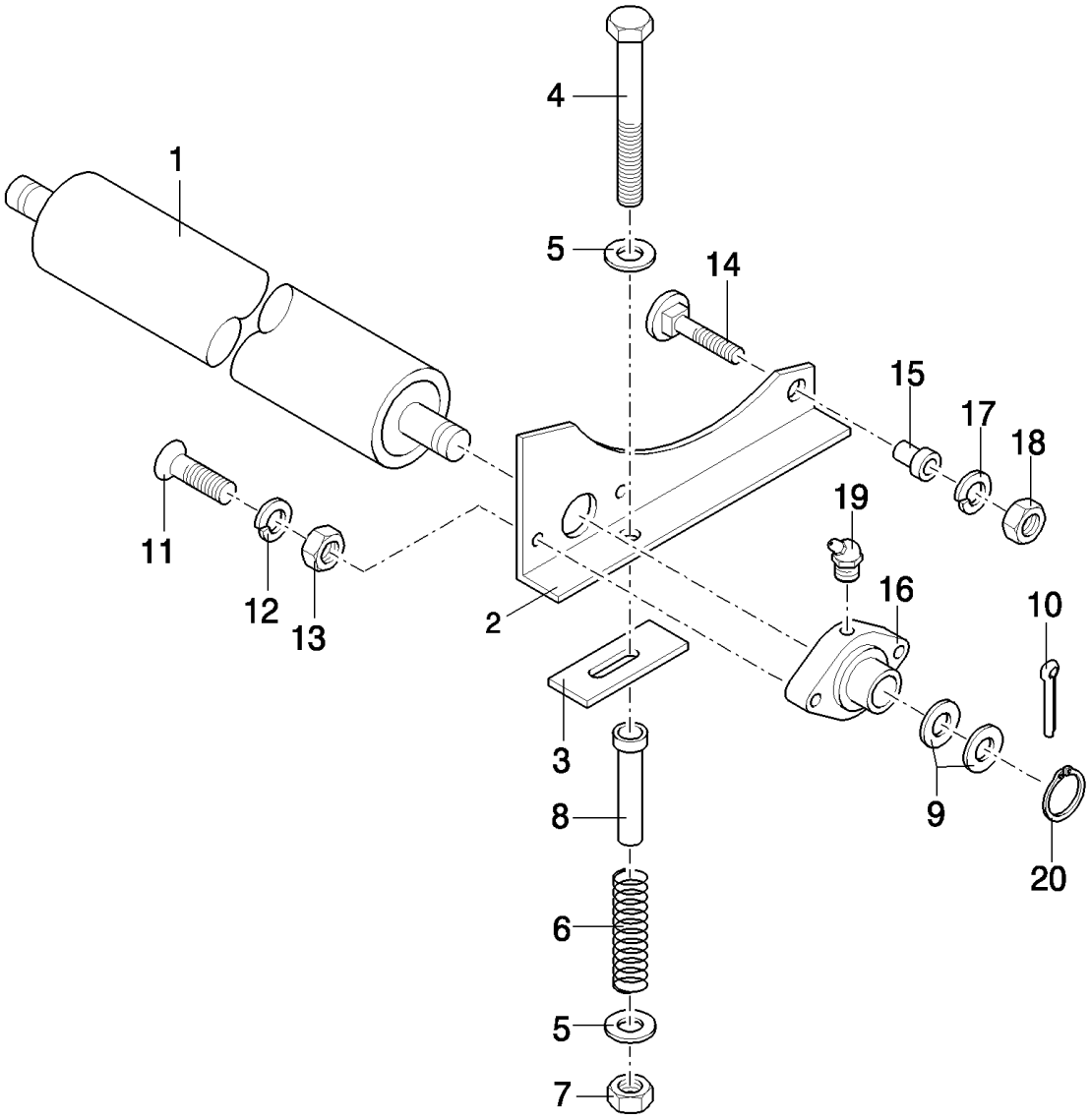

TX68 COMBINE - BASE UNIT

02.16(01) GUIDE ROLL IN STRAW ELEVATOR

ссылка	Номер детали	Кол-во	Описание
1	9819901	1	ROLLER, CONVEYOR, , FOR TX66-68 ONLY, -C4510
1	84007958	1	ROLLER, CONVEYOR, , FOR TX66-67-68 ONLY, D4510-
1	84071544	1	ROLLER, CONVEYOR, , FOR TX66-67-68 ONLY, D1328-
1	84011189	1	ROLLER, CONVEYOR, , FOR TX62-63-64-65 ONLY, -C1327
1	84071545	1	ROLLER, , FOR TX62-63-64-65 ONLY, D1328-
2	9832253	1	SUPPORT, RH, -C7520
2	84039236	1	SUPPORT, RH, D7520-
2	9832252	1	SUPPORT, LH, -C7520
2	84039235	1	SUPPORT, LH, D7520-
3	9500474	2	PAD, RUBBER,
4	412579	2	BOLT, Hex, M10 x 230, 8.8, M10x230
5	9832748	4	WASHER,
6	354085	2	SPRING,
7	86514720	2	NUT, LOCK, M10
8	449027	2	TUBE,
9	140229	10	WASHER, 11MM
10	300868	2	PIN, M6 x 36, Slotted, , FOR TX66-68 ONLY, -C4510
11	412466	4	SCREW, Hex Soc Flat Hd, M10 x 35, 8.8, M10x35
12	140045	4	WASHER, SPRING, Belleville, M10,
13	100016	4	NUT, M10, Cl 8,
14	120044	2	BOLT, CARRIAGE, Short NK, M12 x 30, Cl8.8, Full Thd,
15	9500475	2	BUSHING,
16	9514667	2	BEARING ASSY,
17	140046	2	WASHER, Belleville, M12,
18	100038	2	NUT, M12 x 1.75, Cl 8,
19	323787	2	NIPPLE, LUBE,
20	370002	2	RING, SNAP, M25, Ext,

02.17(01) STRAW ELEVATOR, UPPER SHAFT

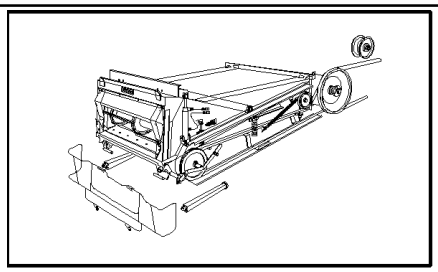

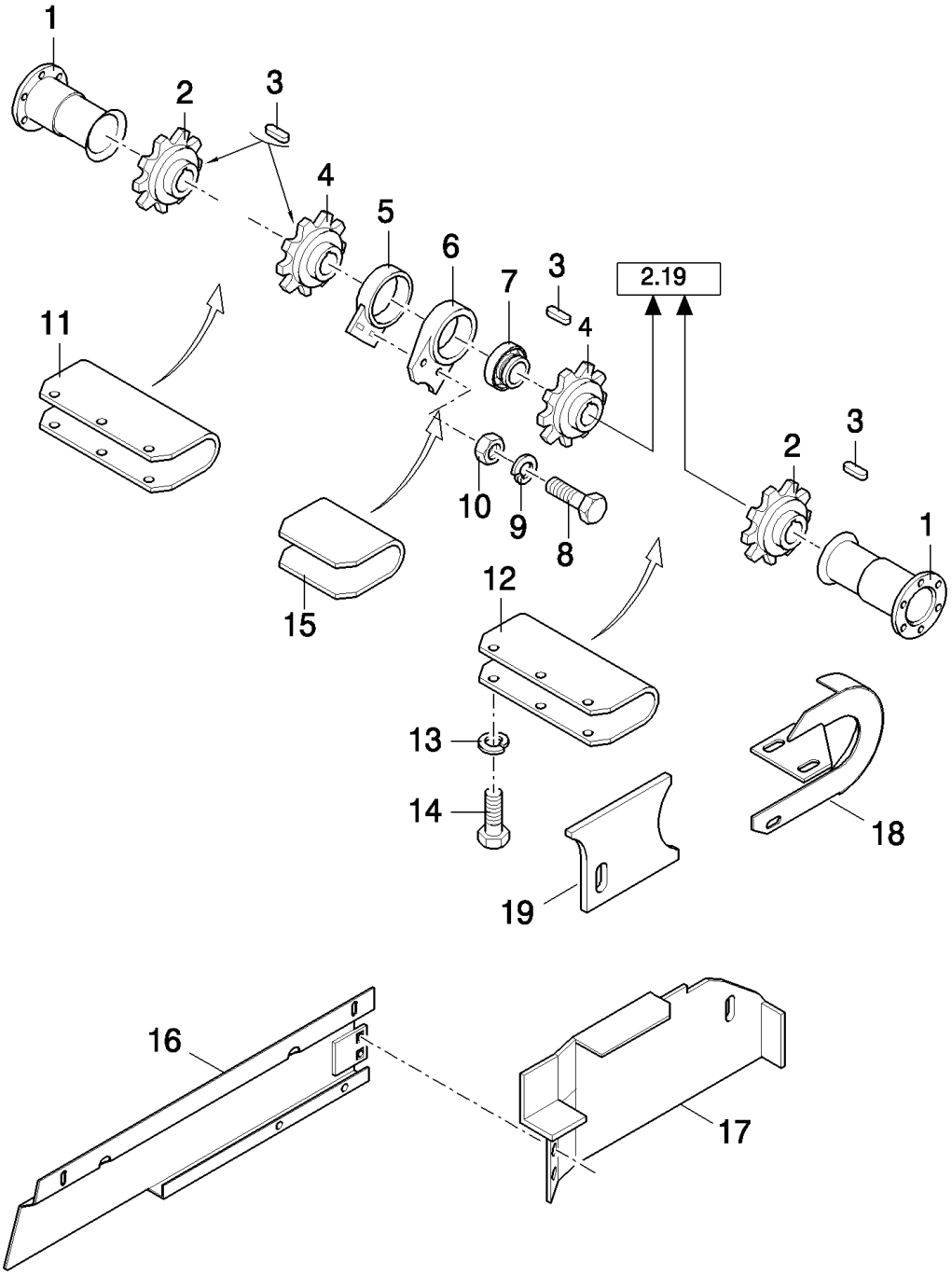

TX68 COMBINE - BASE UNIT

02.17(01) STRAW ELEVATOR, UPPER SHAFT

ссылка	Номер детали	Кол-во	Описание
1	453447	2	SHIELD, , FOR TX66-68 ONLY, -C5620
1	84017876	2	SHIELD, , FOR TX66-68 ONLY, -C0027
1	918614	2	SHIELD, , FOR TX62-64-65 ONLY, -C7520
1	84039380	2	SHIELD, , FOR TX62-63-64-65 ONLY, D7520-
1	84036586	2	SHIELD, , FOR TX66-67-68 ONLY, D7520-
2	9838869	2	SPROCKET, , -C7520
2	84039486	2	SPROCKET, DRIVEN, , D7520-
3	412241	4	KEY,
4	84038625	1	SPROCKET, DRIVEN, , FOR TX62-64-65 ONLY, -C7520
4	84038625	1	SPROCKET, DRIVEN, , FOR TX66-68 ONLY, -C5620
4	84038625	2	SPROCKET, DRIVEN, , FOR TX66-68 ONLY, -C0027
4	84039487	2	SPROCKET, DRIVEN, , D7520-
5	9513003	1	COVER, , FOR TX66-68 ONLY, -C5620
5	84017878	1	COVER, , FOR TX66-68 ONLY, -C0027
5	84039203	1	COVER, , FOR TX66-67-68 ONLY, D7520-
6	751779	1	HOUSING, BEARING,
7	754393	1	BEARING ASSY,
8	328430	2	BOLT, CARRIAGE, Short NK, M12 x 35, Cl8.8, Full Thd, M12x35
9	140046	3	WASHER, Belleville, M12,
10	337475	2	NUT, M12, Cl 10,
11	84005149	1	SHIELD, RH, FOR TX66-68 ONLY, -C5620
11	84017879	2	SHIELD, RH, FOR TX66-68 ONLY, -C0027
11	84056079	1	SHIELD, RH, FOR TX66-67-68 ONLY, D7520-
11	84015792	1	SHIELD, RH, FOR TX62-64-65 ONLY, -C7520
11	84056081	1	SHIELD, RH, FOR TX62-63-64-65 ONLY, D7520-
12	84005148	1	SHIELD, LH, FOR TX66-68 ONLY, -C5620
12	84017879	1	SHIELD, LH, FOR TX66-68 ONLY, -C0027
12	84056079	1	SHIELD, LH, FOR TX66-67-68 ONLY, D7520-
12	84015792	1	SHIELD, LH, FOR TX62-64-65 ONLY, -C7520
12	84056081	1	SHIELD, LH, FOR TX62-63-64-65 ONLY, D7520-
13	322358	12	WASHER, SPRING, Belleville, M8,
14	120104	12	SCREW, Hex, M8 x 20, 8.8,
15	84056079	1	SHIELD, , FOR TX66-67-68 ONLY, D7520-
16	84071482	1	PROFILE, RH, FOR TX66-67-68 ONLY
16	84071455	1	PROFILE, LH, FOR TX66-67-68 ONLY
16	84071595	1	PROFILE, RH, FOR TX66-67-68 ONLY, FOR FRONT FACE ADJUSTMENT (F.F.A.) ONLY
16	84071541	1	PROFILE, LH, FOR FRONT FACE ADJUSTMENT (F.F.A.) ONLY, FOR TX66-67-68 ONLY
17	84062274	1	PLATE, RH, FOR TX66-67-68 ONLY
17	84062276	1	PLATE, LH, FOR TX66-67-68 ONLY
18	84062280	1	SHIELD, RH, FOR TX66-67-68 ONLY
18	84062279	1	SHIELD, LH, FOR TX66-67-68 ONLY
19	84062291	2	BRACKET, , FOR TX66-67-68 ONLY

02.18(01) STRAW ELEVATOR, PROTECTION SHIELDS, RICE

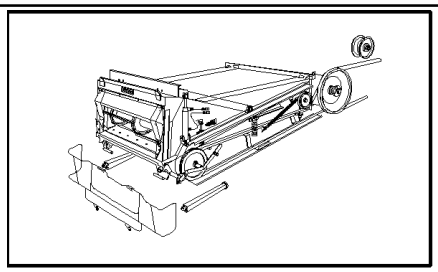

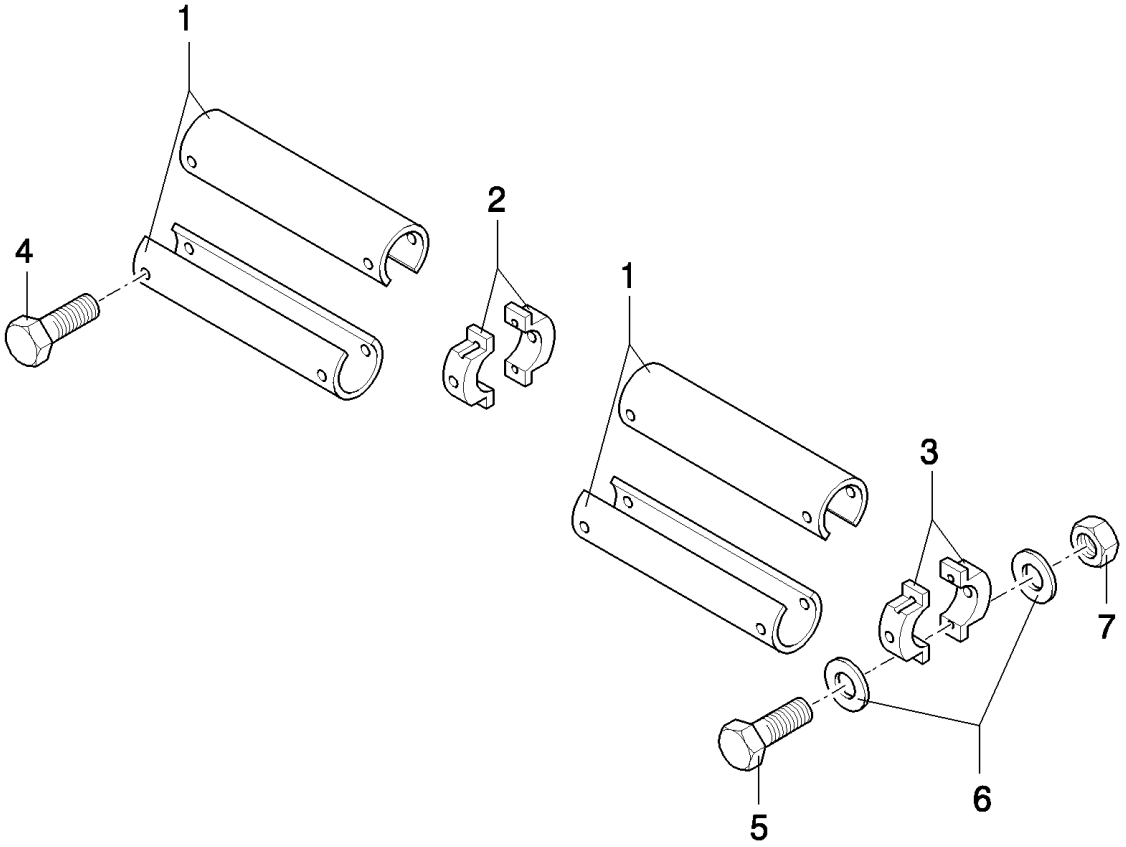

TX68 COMBINE - BASE UNIT

02.18(01) STRAW ELEVATOR, PROTECTION SHIELDS, RICE

ссылка	Номер детали	Кол-во	Описание
1	449977	4	SHIELD, , FOR TX62-63-64-65 ONLY
1	84022121	4	SHIELD, , FOR TX66-67-68 ONLY
1	84022120	2	SHIELD, (CENTER), FOR TX66-67-68 ONLY
2	9513095	4	CLAMP, (INNER)
3	9513093	4	CLAMP, (OUTER)
4	62087	8	SCREW,
5	386045	8	BOLT, Hex, M8 x 45, 8.8,
6	378243	16	WASHER, M8,
7	86629542	8	NUT, LOCK, M8 x 1.25, Cl 8,

02.19(01) STRAW ELEVATOR, UPPER SHAFT

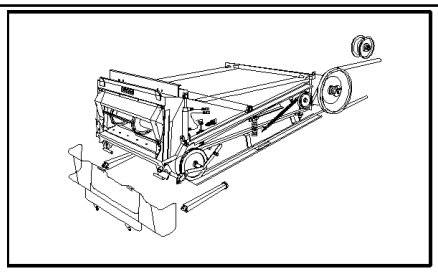

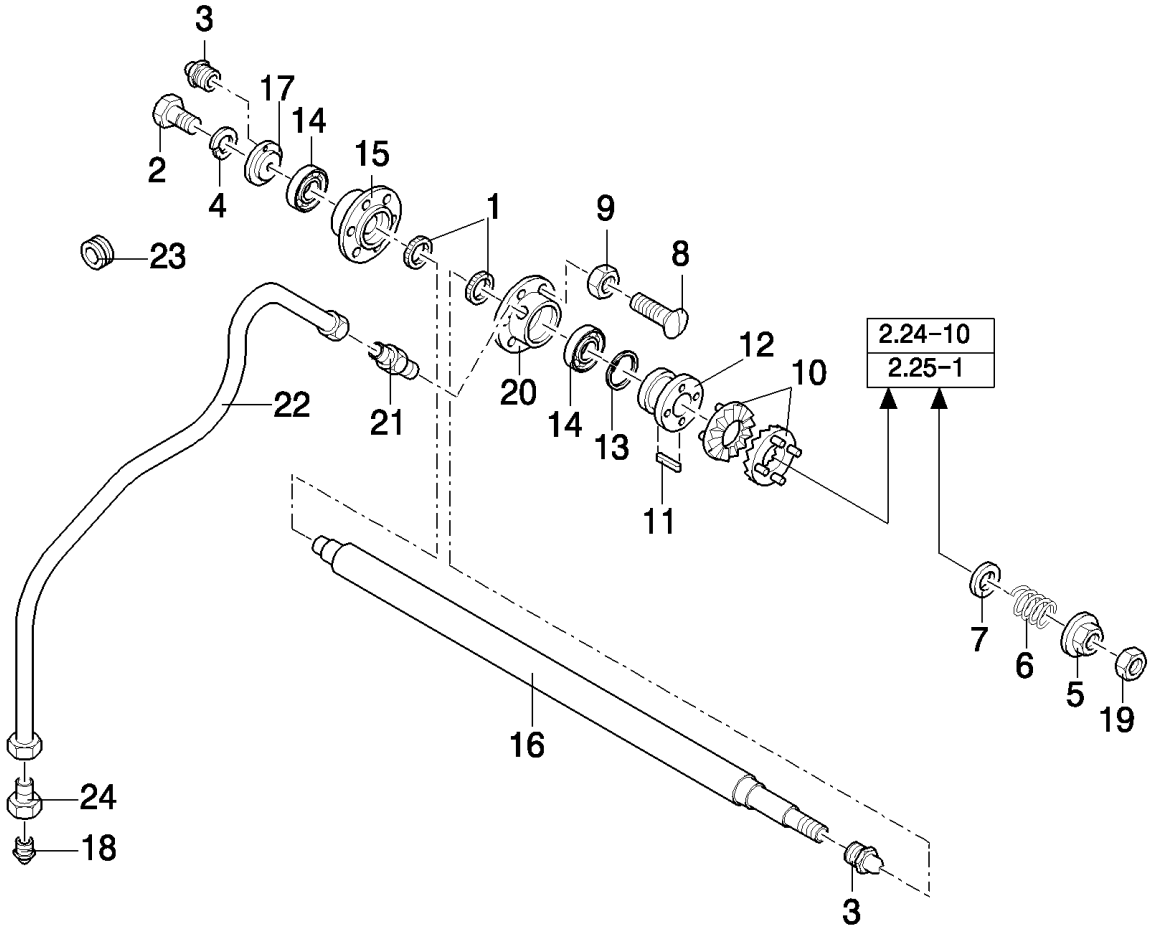

ONLY VALID UNTIL 4819999 (TX62) - 4919999 (TX64) - 6619999 (TX65) - 5025999 (TX66) - 5125999 (TX68)

TX68 COMBINE - BASE UNIT

02.19(01) STRAW ELEVATOR, UPPER SHAFT

ссылка	Номер детали	Кол-во	Описание
1	220011	2	SEAL,
2	9706687	1	SCREW, Hex, M12 x 30, 8.8,
3	321204	1	NIPPLE, LUBE, M6 x 1, 16mm lg,
4	140046	3	WASHER, Belleville, M12,
5	84014255	1	NUT, , -C4540
5	84017867	1	NUT, , D4540-
6	9504887	1	SPRING,
7	9512978	1	WASHER, 56MM
8	412466	26	SCREW, Hex Soc Flat Hd, M10 x 35, 8.8, M10x35
9	100037	20	NUT, M10 x 1.5, Cl 8,
10	362801	2	CLUTCH,
11	9814867	1	KEY,
12	9818037	1	BUSHING, , -C5660
12	84023879	1	HUB, , D5660-
13	370018	1	RING, SNAP,
14	9818526	2	BEARING ASSY,
15	9832254	1	HOUSING, BEARING,
16	84015955	1	SHAFT, , INCL. SHAFT 84032394 AND REFS.18,20 TO 24, FOR TX66-68 ONLY, -C5620
16	84032394	1	SHAFT, , FOR TX66-68 ONLY, ORDER ONLY IF PARTS 18,20 TO 24 ARE MOUNTED, -C5620
16	84017738	1	SHAFT, , FOR TX66-68 ONLY, -C0004
16	84023607	1	SHAFT, , FOR TX66-68 ONLY, D5660-
16	89814875	1	SHAFT, , FOR TX62-64-65 ONLY, -C5660
16	84023608	1	SHAFT, , FOR TX62-64-65 ONLY, D5660-
17	482744	1	COVER,
18	84303	1	NIPPLE, LUBE, 1/8"-27 NPT x 1" lg, Fem, , D5660-
19	412321	1	NUT, M26 x 1.5, Cl 8,
20	9832254	1	HOUSING, BEARING, , -C5660
20	84023609	1	HOUSING, BEARING, , D5660-
21	159338	1	CONNECTOR, HYD., , D5660-
22	84022960	1	TUBE, RIGID, , WITH LATERAL FLOTATION, D5660-
22	84032307	1	TUBE, RIGID, , WITHOUT LATERAL FLOTATION
23	334696	1	GROMMET, , D5660-
24	11787	1	FITTING, 3/8"-24 Fem x 1/8" NPT, , D5660-

ONLY VALID UNTIL 4819999 (TX62) - 4919999 (TX64) - 6619999 (TX65) - 5025999 (TX66) - 5125999 (TX68)

02.19A(01) STRAW ELEVATOR, UPPER SHAFT

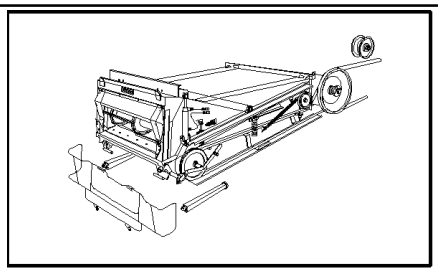

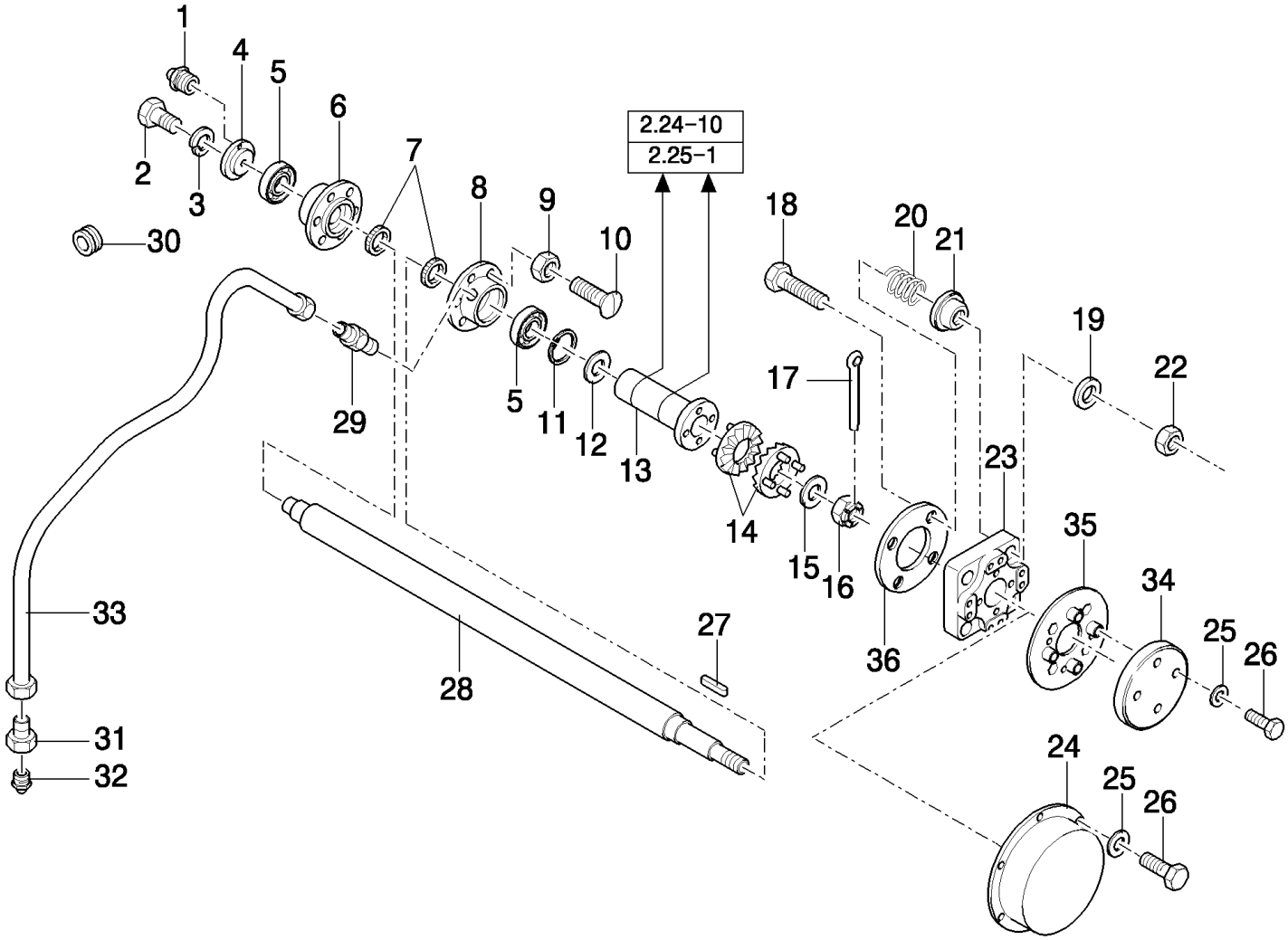

ONLY VALID FROM 4820001 (TX62) - 461033001 (TX63) - 4920001 (TX64) - 6620001 (TX65) - 5026001 (TX66) - 4404001 (TX67) - 5126001 (TX68)

TX68 COMBINE - BASE UNIT

02.19A(01) STRAW ELEVATOR, UPPER SHAFT

ссылка	Номер детали	Кол-во	Описание
1	321204	2	NIPPLE, LUBE, M6 x 1, 16mm lg, , -C1043
2	9706687	1	SCREW, Hex, M12 x 30, 8.8,
3	140046	1	WASHER, Belleville, M12,
4	84023535	1	COVER, , -C1043
4	84053190	1	COVER, , D1044-
5	84037600	1	BEARING, BALL,
6	84023532	1	HOUSING, BEARING, , -C1043
6	84023533	1	HOUSING, BEARING, , D1044-
7	220012	1	RING,
8	84023533	1	HOUSING, BEARING,
9	100037	8	NUT, M10 x 1.5, Cl 8,
10	120259	8	SCREW, Hex Soc Flat Hd, M10 x 40, 8.8,
11	80300633	1	RING, SNAP,
12	84036681	3	WASHER,
13	84058258	1	BUSHING,
14	362801	1	CLUTCH,
15	378248	1	WASHER, 24MM
15	84043025	1	WASHER, 24MM
16	309090	1	NUT, SLOTTED, M24 x 1.5, Cl 8, M24
17	130012	1	PIN, SPLIT (COTTER), M5 x 50,
18	62125	4	BOLT, M20x160
19	394632	4	WASHER, M20 x 40 x 4, HT, , -C1241
19	86592703	4	WASHER, M20 x 50 x 6, HT, , D1242-
20	84036951	4	SPRING,
21	84041164	4	BUSHING,
22	80412111	4	NUT, M20
23	84041807	1	HUB, , -C1076
23	84043923	1	HUB, , D1077-
24	84037110	1	COVER, , -C1076
25	322357	6	WASHER, SPRING, Belleville, M6,
26	120100	6	BOLT, Hex, M6 x 20, 8.8,
27	170060	1	KEY,
28	84037999	1	SHAFT, , FOR TX66-67-68 ONLY
28	84038627	1	SHAFT, , FOR TX62-63-64-65 ONLY
29	159338	2	CONNECTOR, HYD.,
30	334696	2	GROMMET,
31	11787	2	FITTING, 3/8"-24 Fem x 1/8" NPT,
32	84303	2	NIPPLE, LUBE, 1/8"-27 NPT x 1" lg, Fem,
33	84039233	1	TUBE, RIGID, , FOR FRONT FACE ADJUSTMENT (F.F.A.) ONLY, WITH LATERAL FLOTATION, -C1043
33	84039234	1	, WITHOUT LATERAL FLOTATION, -C1043
33	84032151	1	TUBE, RIGID, L:2500MM, D1044-
34	84058299	1	COVER, , D1077-
35	84058298	1	DISC, , D1077-

ONLY VALID FROM 4820001 (TX62) - 461033001 (TX63) - 4920001 (TX64) - 6620001 (TX65) - 5026001 (TX66) - 4404001 (TX67) - 5126001 (TX68)

TX68 COMBINE - BASE UNIT

02.19A(01) STRAW ELEVATOR, UPPER SHAFT

ссылка	Номер детали	Кол-во	Описание
36	84056942	1	DISC, , D1077-

ONLY VALID FROM 4820001 (TX62) - 461033001 (TX63) - 4920001 (TX64) - 6620001 (TX65) - 5026001 (TX66) - 4404001 (TX67) - 5126001 (TX68)

02.20(01) HYDRAULIC DRIVEN REVERSING SYSTEM

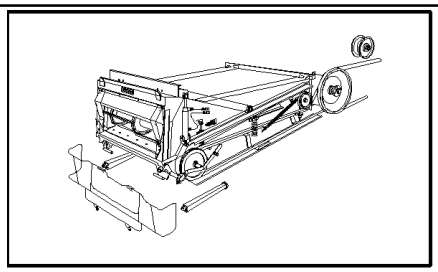

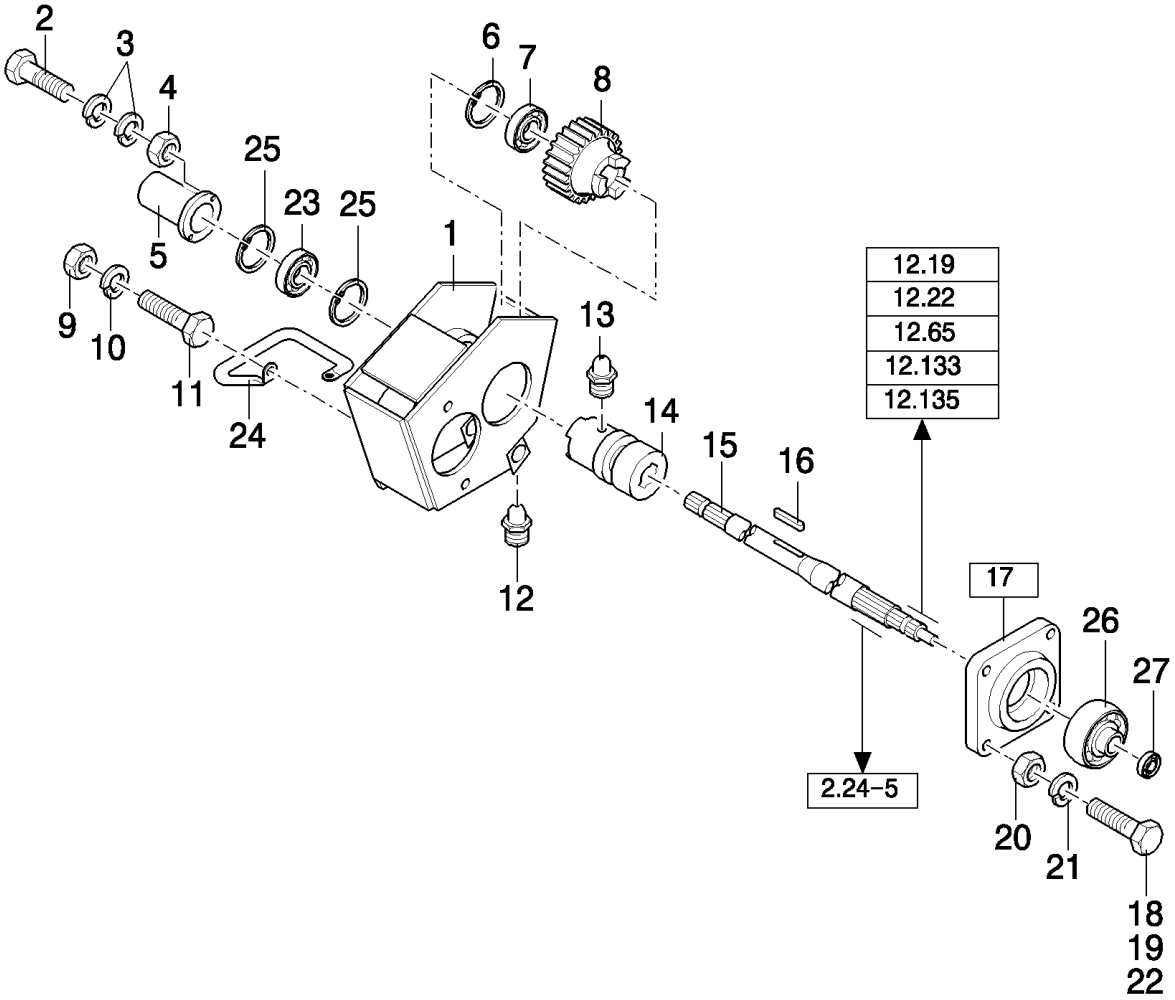

TX68 COMBINE - BASE UNIT

02.20(01) HYDRAULIC DRIVEN REVERSING SYSTEM

ссылка	Номер детали	Кол-во	Описание
1	84035121	1	SUPPORT, , -C1032
1	84035672	1	SUPPORT, , D1033-
2	43127	2	BOLT, Hex, M8 x 25, 8.8,
3	322358	4	WASHER, SPRING, Belleville, M8,
4	9706690	2	NUT, M8, Cl 8,
5	334568	1	COVER,
6	370018	1	RING, SNAP,
7	9504248	1	BEARING, BALL,
8	9507933	1	GEAR,
9	100016	2	NUT, M10, Cl 8,
10	140045	2	WASHER, SPRING, Belleville, M10,
11	43140	2	BOLT, Hex, M10 x 30, 8.8, Full Thd,
12	321204	1	NIPPLE, LUBE, M6 x 1, 16mm lg,
13	332038	2	NIPPLE, LUBE,
14	9507865	1	COUPLING,
15	84004385	1	SHAFT, , FOR TX66-67-68 ONLY, -C1193
15	84432903	1	SHAFT, , FOR TX66-67-68 ONLY, BSN F194429
15	84459634	1	SHAFT, , FOR TX66-67-68 ONLY, ASN D430
15	84004162	1	SHAFT, , FOR TX63-64-65 ONLY, WITH LATERAL FLOTATION, -C1193
15	84432995	1	SHAFT, , WITH LATERAL FLOTATION, FOR TX63-64-65 ONLY, BSN F194429
15	84459636	1	SHAFT, , FOR TX63-64-65 ONLY, WITH LATERAL FLOTATION, ASN D430
15	84011439	1	SHAFT, , FOR TX63-64-65 ONLY, WITHOUT LATERAL FLOTATION, -C1193
15	84433022	1	SHAFT, , WITHOUT LATERAL FLOTATION, FOR TX63-64-65 ONLY, D1194-
16	323190	2	KEY,
17	84004216	1	BEARING ASSY, (26,27)
18	120090	1	SCREW, Hex, M16 x 50, 8.8,
19	120091	1	BOLT, Hex, M16 x 60, 8.8,
20	100020	4	NUT, M16, Cl 8,
21	140048	4	WASHER, SPRING, Belleville, M16,
22	374889	2	BOLT, Hex, M16 x 100, 8.8,
23	9504248	1	BEARING, BALL, , -C1032
23	322360	1	BEARING, BALL, , D1033-
24	84035650	1	TUBE, , D1033-
25	370018	2	RING, SNAP, , D1033-
26	84004716	1	BEARING ASSY,
27	84004717	1	BEARING ASSY,

02.21(01) HYDRAULIC DRIVEN REVERSING SYSTEM

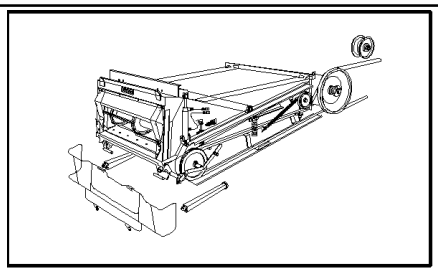

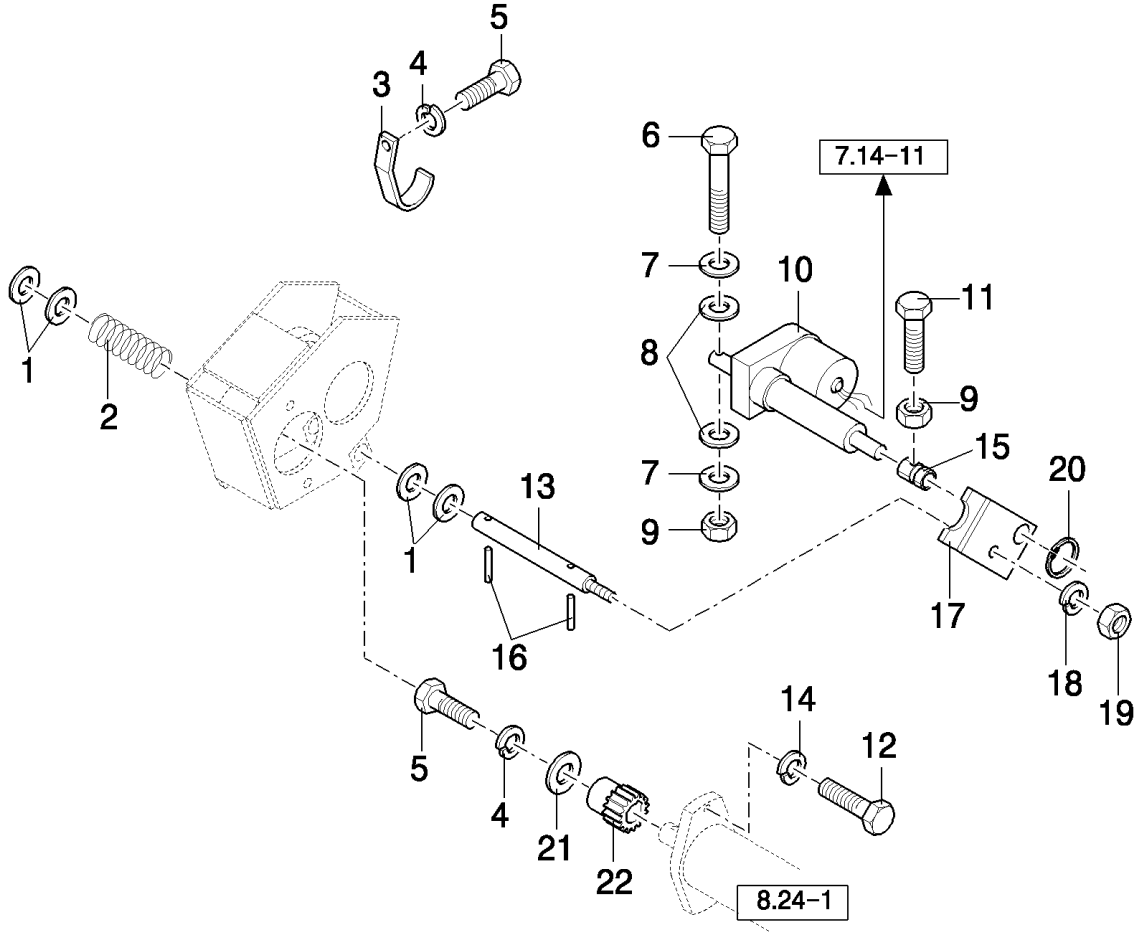

TX68 COMBINE - BASE UNIT

02.21(01) HYDRAULIC DRIVEN REVERSING SYSTEM

ссылка	Номер детали	Кол-во	Описание
1	443434	10	WASHER, 20MM
2	394871	1	SPRING,
3	84001084	1	BRACKET,
4	322358	1	WASHER, SPRING, Belleville, M8,
5	43127	1	BOLT, Hex, M8 x 25, 8.8,
6	9706717	1	BOLT, Hex, M12 x 70, 8.8, Full Thd, M12x70
7	140084	2	WASHER, 13MM
8	140223	2	WASHER, 13MM
9	100038	2	NUT, M12 x 1.75, Cl 8,
10	434127	1	ACTUATOR,
11	9706693	1	BOLT, Hex, M12 x 60, 8.8,
12	86629541	2	BOLT, Hex, M12 x 40, 8.8, Full Thd,
13	84015536	1	SHAFT,
14	140046	2	WASHER, Belleville, M12,
15	9508061	1	BUSHING,
16	9511051	2	PIN, LOCK, M6 x 30, Slotted,
17	9508056	1	FORK,
18	140048	1	WASHER, SPRING, Belleville, M16,
19	100020	1	NUT, M16, Cl 8,
20	370006	1	RING, SNAP,
21	9507949	1	WASHER, 9MM
22	9507932	1	GEAR,

02.23(01) DRIVE BESIDES STRAW ELEVATOR

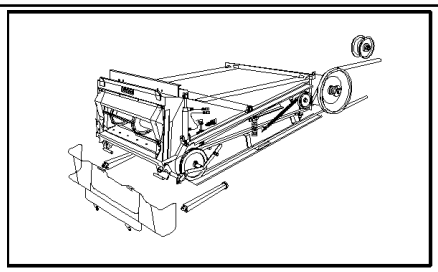

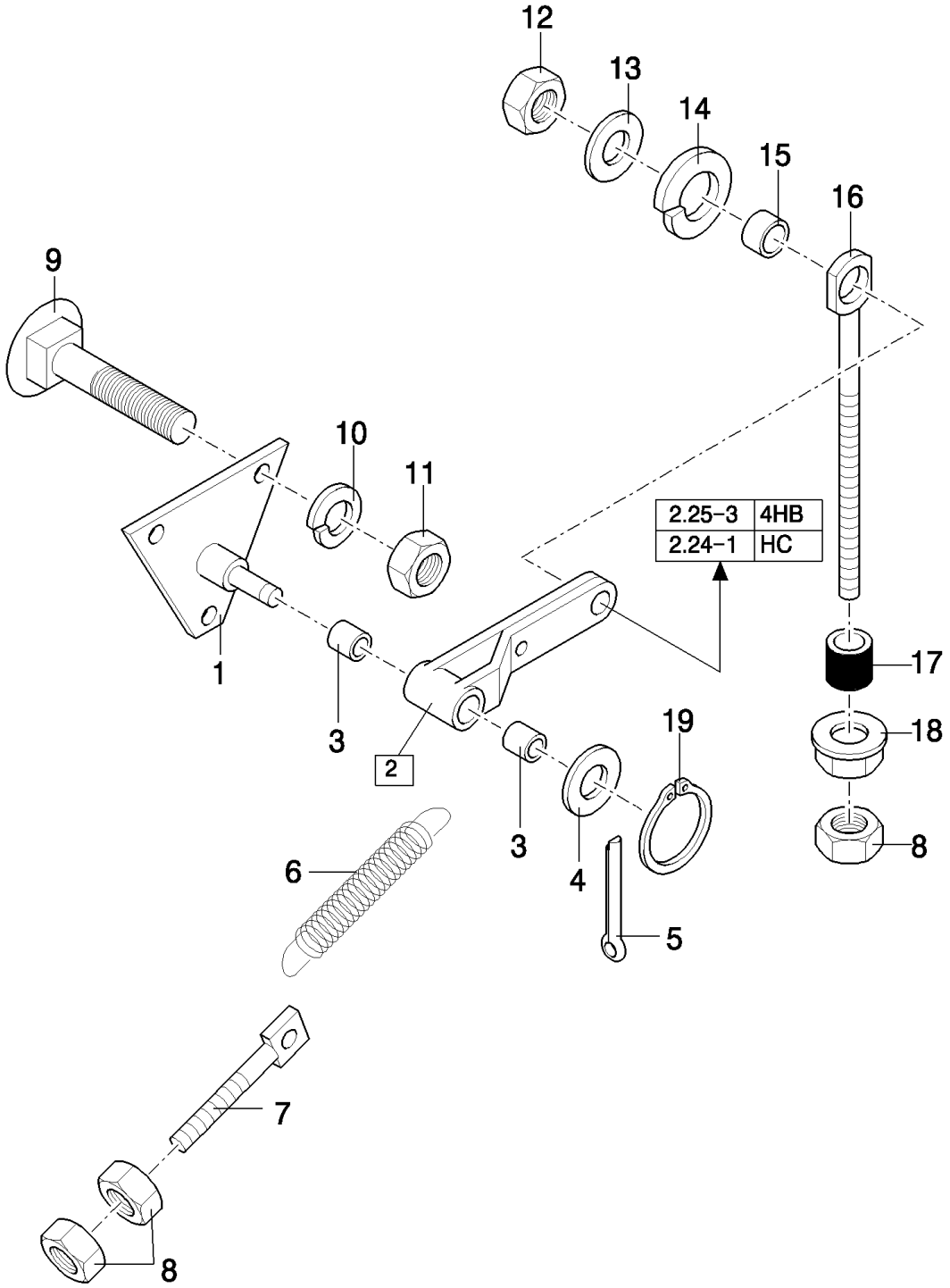

TX68 COMBINE - BASE UNIT

02.23(01) DRIVE BESIDES STRAW ELEVATOR

ссылка	Номер детали	Кол-во	Описание
1	9838177	1	SUPPORT, , -C4510
1	84007943	1	SUPPORT, , D4510-
2	9815095	1	ARM, [3(2x)]
3	382975	2	SLEEVE,
4	338206	1	WASHER, 26MM
5	300595	1	PIN, SPLIT (COTTER), M4 x 40, , FOR TX66-68 ONLY, -C4510
6	9814943	1	SPRING,
7	920051	1	ROD,
8	337475	4	NUT, M12, Cl 10,
9	86512446	3	BOLT, CARRIAGE, Short NK, M10 x 30, Cl8.8, Full Thd,
10	140045	3	WASHER, SPRING, Belleville, M10,
11	100016	3	NUT, M10, Cl 8,
12	100020	1	NUT, M16, Cl 8,
13	378246	1	WASHER, 17MM
14	140048	1	WASHER, SPRING, Belleville, M16,
15	9815342	1	SPACER,
16	9831302	1	TIE-ROD,
17	84000201	1	RUBBER SLEEVE, (RUBBER)
18	84000203	1	NUT,
19	370002	1	RING, SNAP, M25, Ext,

02.24(01) DRIVE BESIDES STRAW ELEVATOR

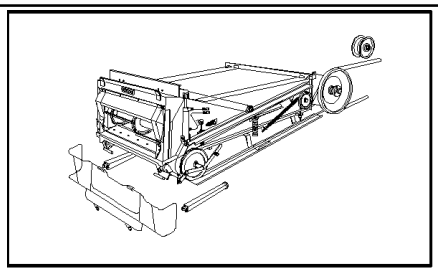

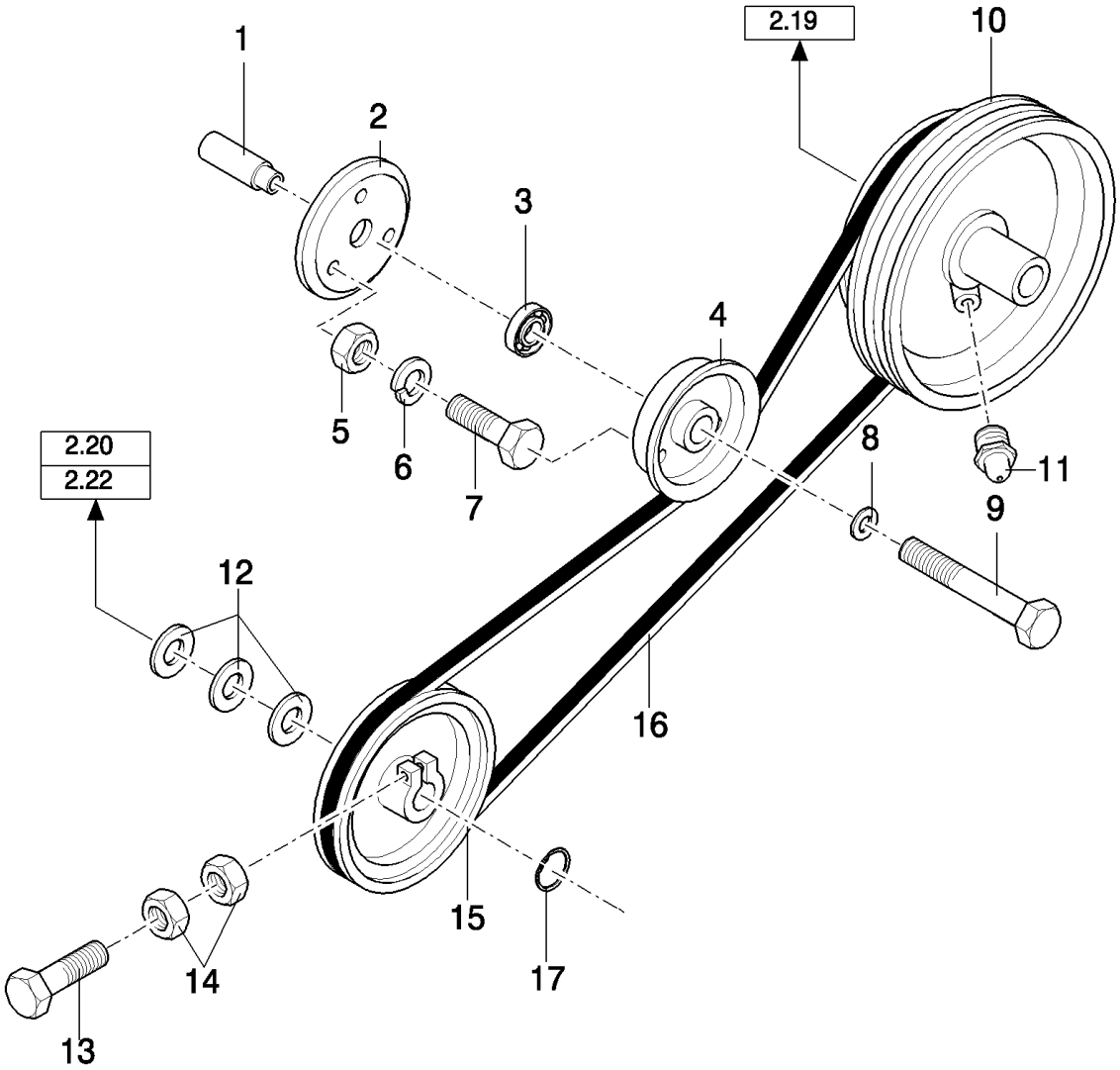

FOR HC BELT ONLY

TX68 COMBINE - BASE UNIT

02.24(01) DRIVE BESIDES STRAW ELEVATOR

ссылка	Номер детали	Кол-во	Описание
1	89815097	1	BUSHING,
2	9818024	1	HALF-PULLEY,
3	443898	1	BEARING, BALL,
4	9818023	1	HALF-PULLEY,
5	15896221	3	NUT, M6, Cl 10,
6	322357	3	WASHER, SPRING, Belleville, M6,
7	80120099	3	BOLT, Hex, M6 x 16, 8.8,
8	378246	1	WASHER, 17MM
9	334967	1	BOLT, Hex, M16 x 140, 8.8, M16x140
10	9593411	1	PULLEY, , -C7520
10	84035348	1	PULLEY, , -C0043
10	84057018	1	PULLEY, , D1077-
11	321204	1	NIPPLE, LUBE, M6 x 1, 16mm lg,
12	330748	6	WASHER, 52MM
13	43158	1	BOLT, Hex, M12 x 80, 8.8,
14	337475	1	NUT, M12, Cl 10,
15	84001085	1	PULLEY, , -C1245
15	84439976	1	PULLEY, , BSN F246429
15	84459664	1	PULLEY, , ASN D430
16	9593418	1	BELT, TRANSMISSION, HC, WITH LATERAL FLOTATION, -C1245
16	84440188	1	BELT, TRANSMISSION, , WITH LATERAL FLOTATION, D1246-
16	89593440	1	BELT, TRANSMISSION, HC, WITHOUT LATERAL FLOTATION
17	320607	1	KEY, , ASN D430

FOR HC BELT ONLY

02.25(01) DRIVE BESIDES STRAW ELEVATOR

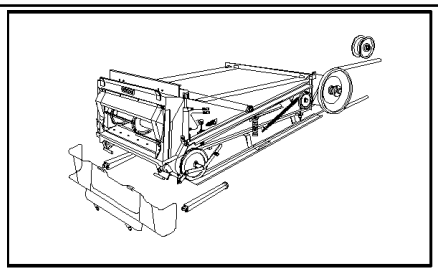

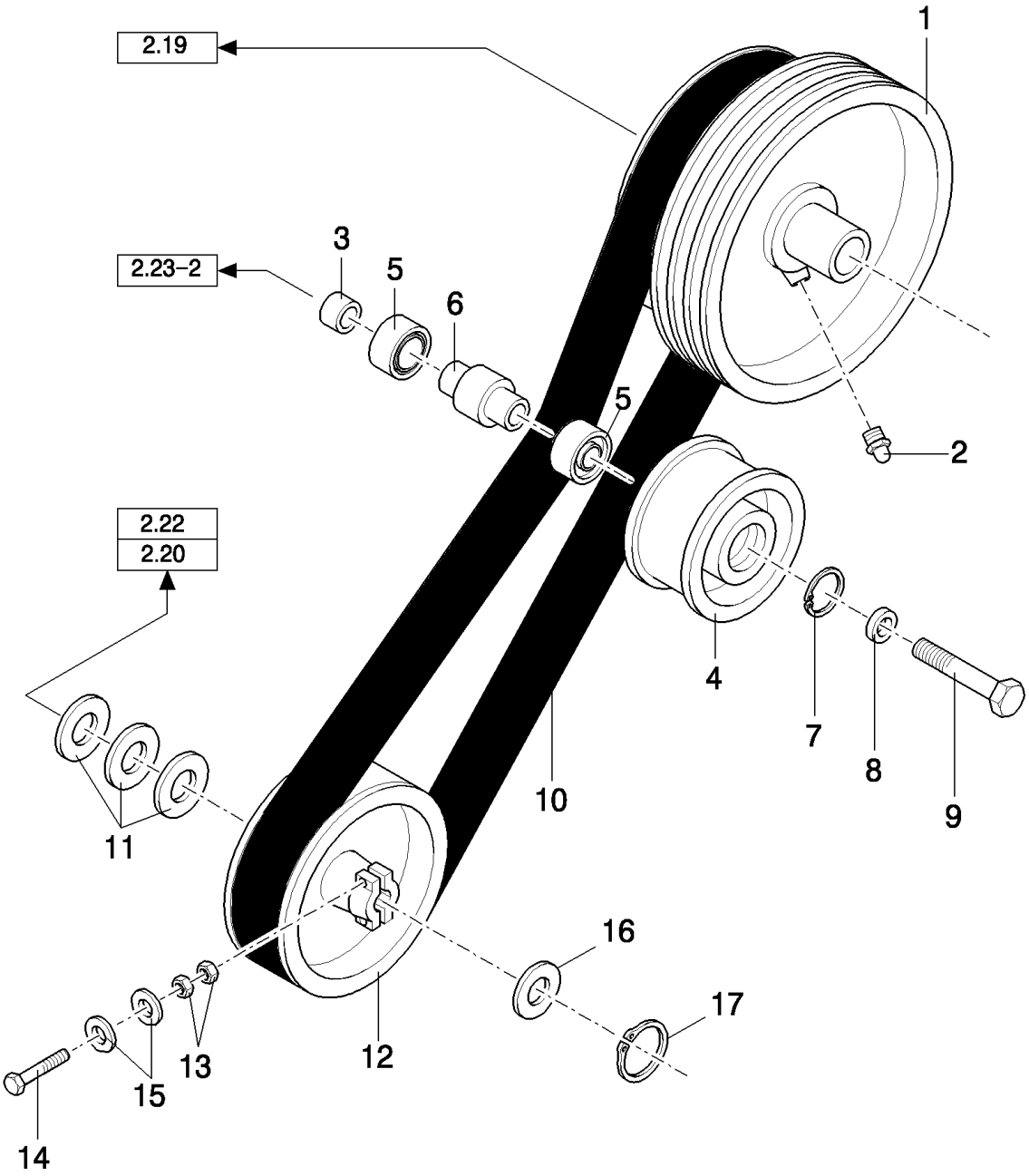

FOR 4HB BELT ONLY

TX68 COMBINE - BASE UNIT

02.25(01) DRIVE BESIDES STRAW ELEVATOR

ссылка	Номер детали	Кол-во	Описание
1	84001431	1	PULLEY, , -C7520
1	84002940	1	PULLEY, , NOT FOR TX65PLUS, FOR TX62-63-64-65-66 ONLY, -C0043
1	84057014	1	PULLEY, , FOR TX62-63-64-65-66 ONLY, NOT FOR TX65PLUS, D1077-
1	84002851	1	PULLEY, , FOR TX65-67-68 ONLY, FOR TX65PLUS ONLY, -C0043
1	84057007	1	PULLEY, , FOR TX65PLUS ONLY, FOR TX65-67-68 ONLY, D1077-
2	321204	1	NIPPLE, LUBE, M6 x 1, 16mm lg,
3	355392	1	SPACER,
4	425057	1	PULLEY,
5	443898	2	BEARING, BALL,
6	425190	1	SPACER,
7	370011	2	RING, SNAP, M52, Int,
8	378246	1	WASHER, 17MM
9	334967	1	BOLT, Hex, M16 x 140, 8.8, M16x140
10	9593400	1	BELT, TRANSMISSION, 4HB, WITH LATERAL FLOTATION, -C1245
10	84012390	1	BELT, TRANSMISSION, , WITH LATERAL FLOTATION, D1246-
10	9593464	1	BELT, TRANSMISSION, 4HB, WITHOUT LATERAL FLOTATION
11	330748	6	WASHER, 52MM
12	84001052	1	PULLEY, , -C6630
12	84037132	1	PULLEY, 433 RPM, -C0064
12	84461018	1	PULLEY, 433 RPM, ASN D430
12	84433051	1	PULLEY, 575 RPM, -C0068
12	84433052	1	PULLEY, 575 RPM , BSN F246429
12	84459663	1	PULLEY, 575 RPM, ASN D430
13	337475	2	NUT, M12, Cl 10,
13	100020	2	NUT, M16, Cl 8,
14	43158	2	BOLT, Hex, M12 x 80, 8.8,
14	120093	2	BOLT, Hex, M16 x 80, 8.8,
14	350616	2	SCREW, Hex, M16 x 90, 8.8,
15	140020	4	WASHER, M16 x 30 x 3,
16	140126	1	SPACER, , BSN F194429
17	370007	1	RING, SNAP, M45, Ext, , BSN F194429
17	320607	1	KEY, , ASN D430

FOR 4HB BELT ONLY

02.26(01) HEADER DRIVE ENGAGING MECHANISM

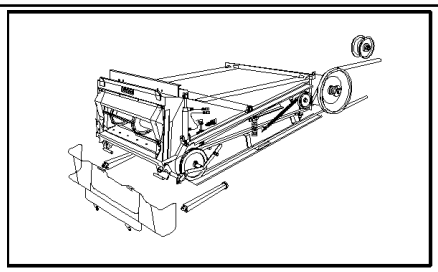

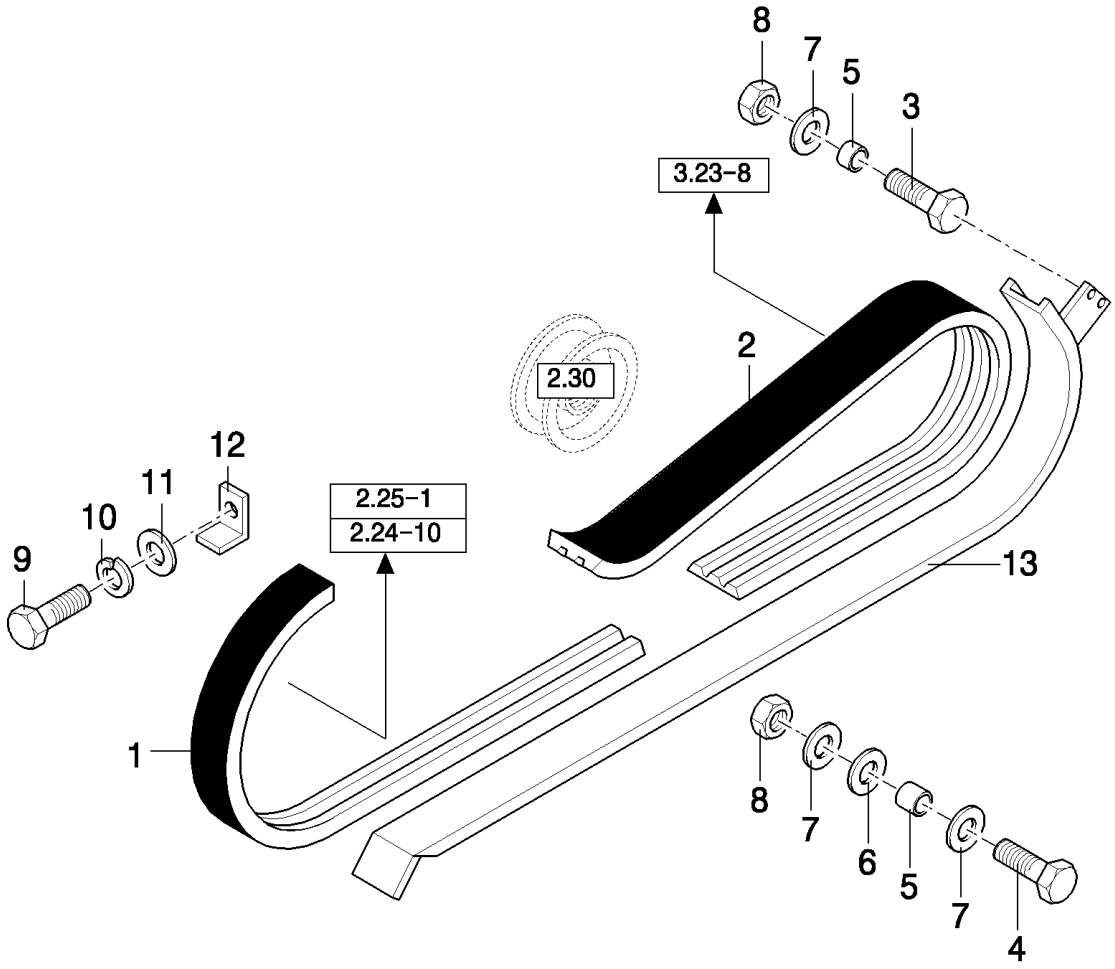

TX68 COMBINE - BASE UNIT

02.26(01) HEADER DRIVE ENGAGING MECHANISM

ссылка	Номер детали	Кол-во	Описание
1	434222	1	BELT, TRANSMISSION, 2HB
2	9832309	1	BELT, 3HB
2	743877	1	BELT, TRANSMISSION, 4HB
3	120101	2	BOLT, Hex, M6 x 30, 8.8, Full Thd,
4	120102	2	SCREW, Hex, M6 x 40, 8.8, Full Thd,
5	80200080	4	BUSHING, , -C6680
5	84031437	4	BUSHING, , D6680-
6	140040	AR	WASHER, M6 x 22 x 2,
7	322357	8	WASHER, SPRING, Belleville, M6,
8	15896221	4	NUT, M6, Cl 10,
9	43128	1	BOLT, Hex, M8 x 30, 8.8,
10	322358	4	WASHER, SPRING, Belleville, M8,
11	378243	1	WASHER, M8,
12	446088	1	SUPPORT,
13	434311	1	GUIDE, , -C6680
13	84031440	1	GUIDE, , -C0016
13	84036844	1	GUIDE, , FOR TX63 WITH REMOTE CONTROL, FOR TX64-65-66-67-68 ONLY, D7520-
13	84031440	1	GUIDE, , FOR TX62-63 ONLY, D6680-

02.27(01) HEADER DRIVE ENGAGING MECHANISM

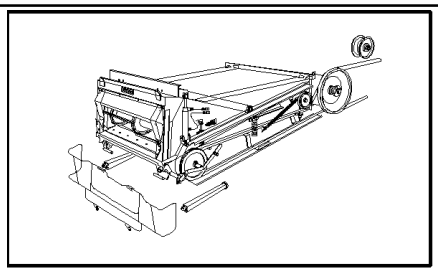

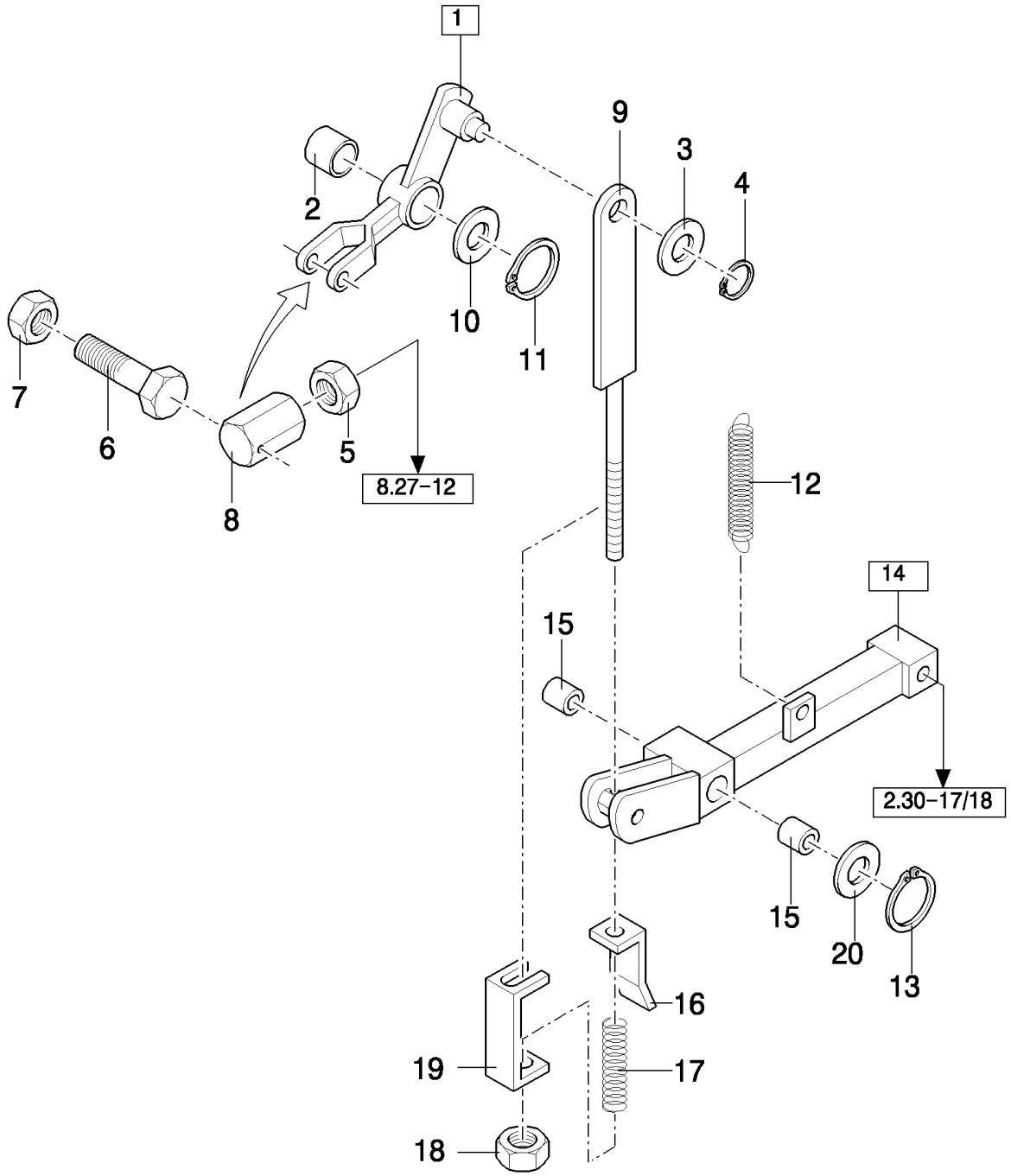

FOR TX63 WITH REMOTE CONTROL ONLY

TX68 COMBINE - BASE UNIT

02.27(01) HEADER DRIVE ENGAGING MECHANISM

ссылка	Номер детали	Кол-во	Описание
1	9814592	1	LEVER, (2)
2	419621	1	BUSHING,
3	378246	1	WASHER, 17MM
4	300625	1	RING, SNAP, M16, Ext, , -C5620
4	14164370	1	PIN, LOCK, M4 x 30, Slotted, , D5620-
5	364164	1	NUT, Thin, M16 x 1.5, Cl 04, M16
6	386045	1	BOLT, Hex, M8 x 45, 8.8,
7	86629542	1	NUT, LOCK, M8 x 1.25, Cl 8,
8	9819145	1	COUPLING,
9	89814631	1	TIE-ROD,
10	442293	1	WASHER, 36MM
11	11068376	1	RING, SNAP, M35, Ext x 1.5 Thk,
12	391151	1	SPRING,
13	370002	1	RING, SNAP, M25, Ext,
14	9814726	1	ARM, [15(2x)]
15	382975	2	SLEEVE,
16	9850486	1	INDICATOR, 3HB,4HB
16	84012451	1	INDICATOR, 2HB
17	180091	1	SPRING, 2HB
17	356822	1	SPRING, 3HB,4HB
18	412126	1	NUT, LOCK, M12 x 1.75, Cl 8,
19	9516335	1	REINFORCEMENT, , -C5620
19	84021468	1	REINFORCEMENT, , D5620-
20	140103	1	WASHER, 26MM

FOR TX63 WITH REMOTE CONTROL ONLY

02.30(01) HEADER DRIVE ENGAGING IDLER

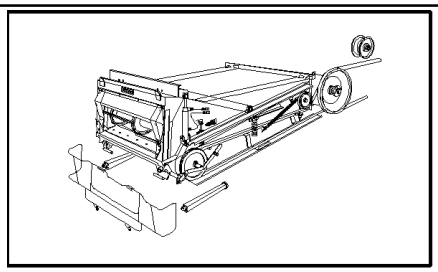

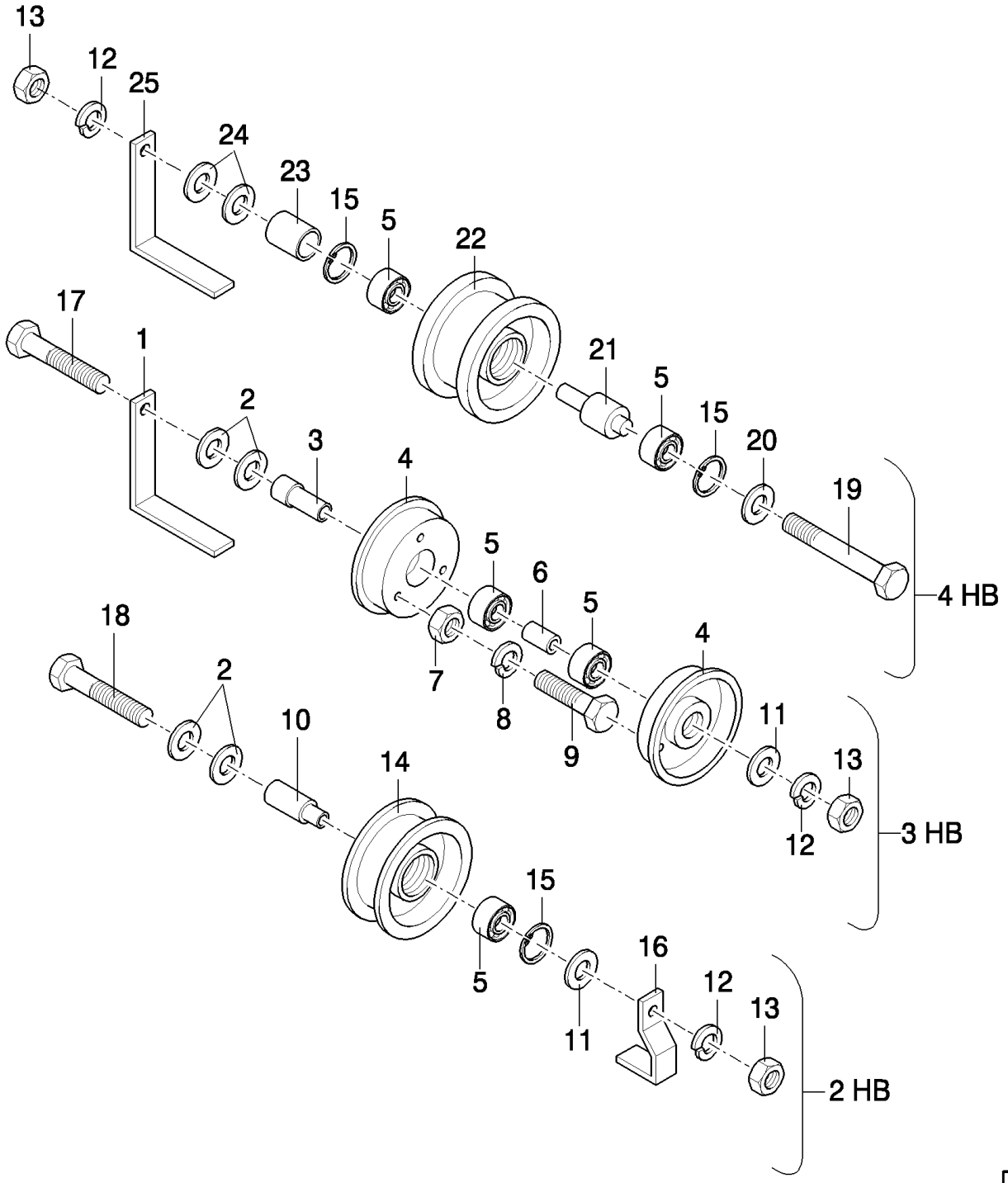

TX68 COMBINE - BASE UNIT

02.30(01) HEADER DRIVE ENGAGING IDLER

ссылка	Номер детали	Кол-во	Описание
1	455755	1	GUIDE,
2	140090	AR	WASHER, 17MM
3	427248	1	BUSHING,
4	391081	2	PULLEY,
5	443898	AR	BEARING, BALL,
6	430235	1	SPACER, 3HB
7	9706690	3	NUT, M8, Cl 8,
8	322358	3	WASHER, SPRING, Belleville, M8,
10	377951	1	BUSHING,
11	140093	1	WASHER, 17MM
12	140048	1	WASHER, SPRING, Belleville, M16,
13	100020	1	NUT, M16, Cl 8,
14	9819460	1	WHEEL, IDLER,
15	370011	1	RING, SNAP, M52, Int,
16	424562	1	GUIDE,
17	334967	1	BOLT, Hex, M16 x 140, 8.8, M16x140
18	354360	1	BOLT, Hex, M16 x 130, 8.8,
19	371221	1	BOLT, Hex, M16 x 160, 8.8, M16x160
20	140190	1	WASHER,
21	425190	1	SPACER,
22	425057	1	PULLEY,
23	84032344	1	BUSHING,
24	378246	AR	WASHER, 16MM
25	425187	1	GUIDE,
9	16043224	3	BOLT, Hex, M8 x 16, 8.8, Full Thd,

02.31(01) CHOCK

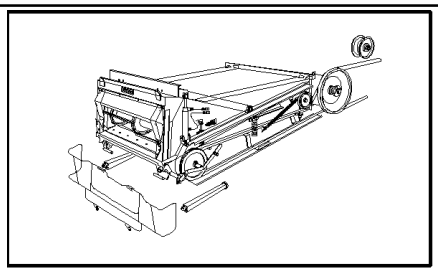

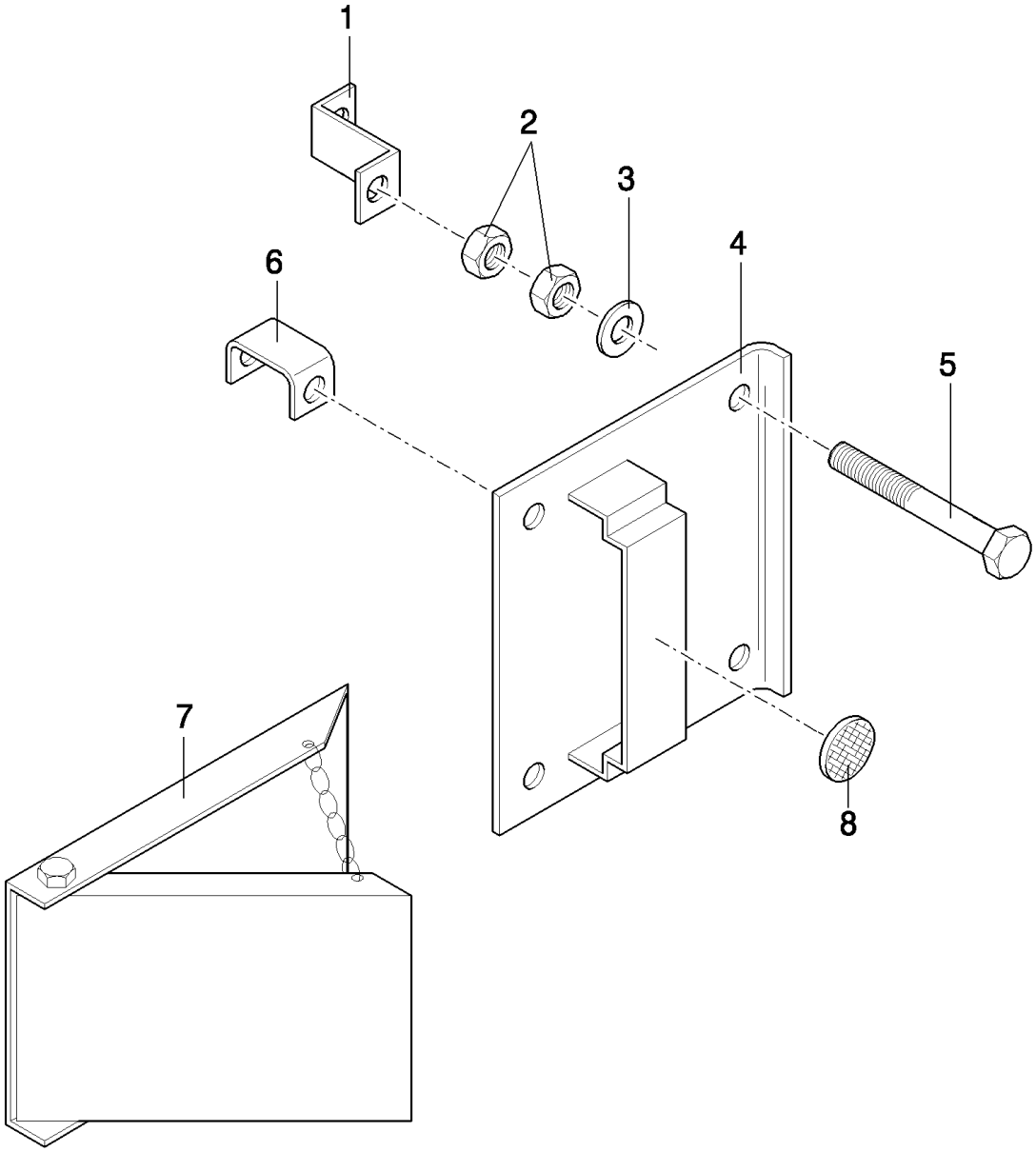

TX68 COMBINE - BASE UNIT

02.31(01) CHOCK

ссылка	Номер детали	Кол-во	Описание
1	84018278	3	SUPPORT,
2	100016	12	NUT, M10, Cl 8,
3	140045	8	WASHER, SPRING, Belleville, M10,
4	452770	2	CLAMP,
5	538885	4	BOLT, Hex, M10 x 90, 8.8, Full Thd, M10x90
5	11106231	2	BOLT, Hex, M10 x 25, 10.9, Full Thd,
6	84018986	3	SUPPORT,
7	452769	2	WHEEL CHOCK,
8	437024	1	REFLECTOR, RED

SECTIONS	**SECTIONS**	**SECCIONES**	**AFSNIT**
SEZIONI	**ABSCHNITTE**	**SECÇÕES**	**SECTIES**

SEC. 3

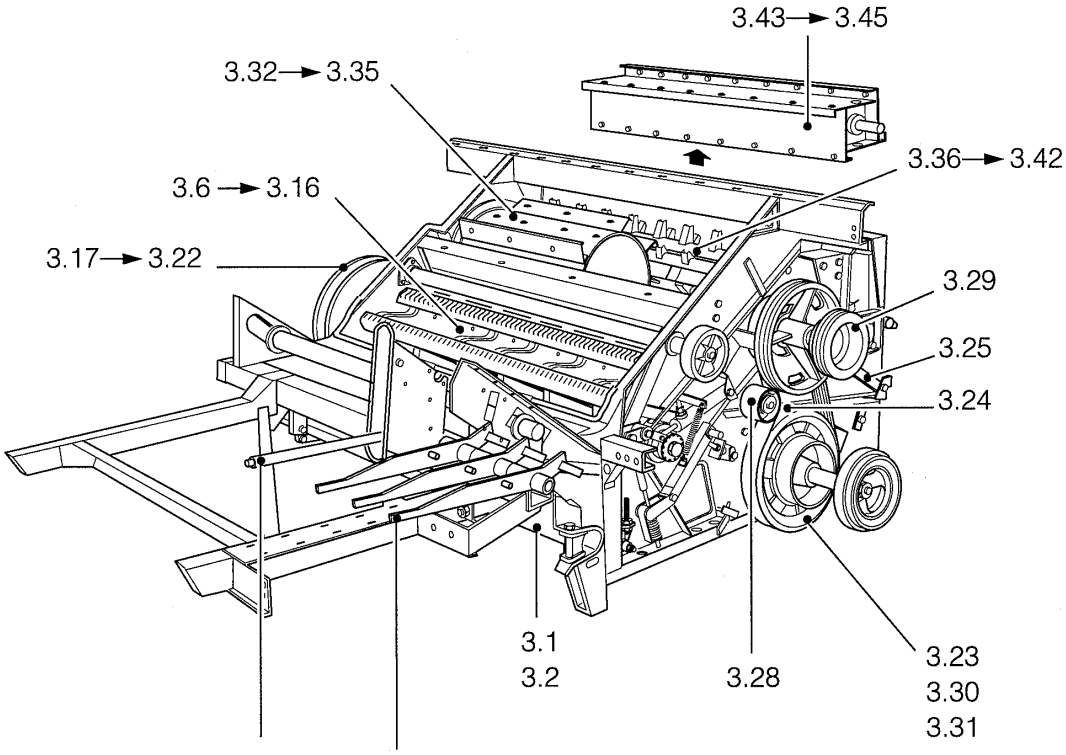

(TX62-63) 3.3
(TX64-65-66-67-68) 3.4
(TX64-65-66-67-68) 3.5

3.25 (TX64-65-66-67-68)
3.26 (TX62-63)
3.27

ссылка	Номер детали	Кол-во	Описание

03.01(01) STONE TRAP AND COVER PLATE

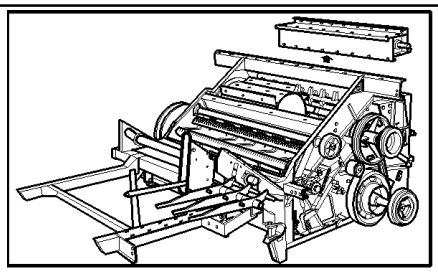

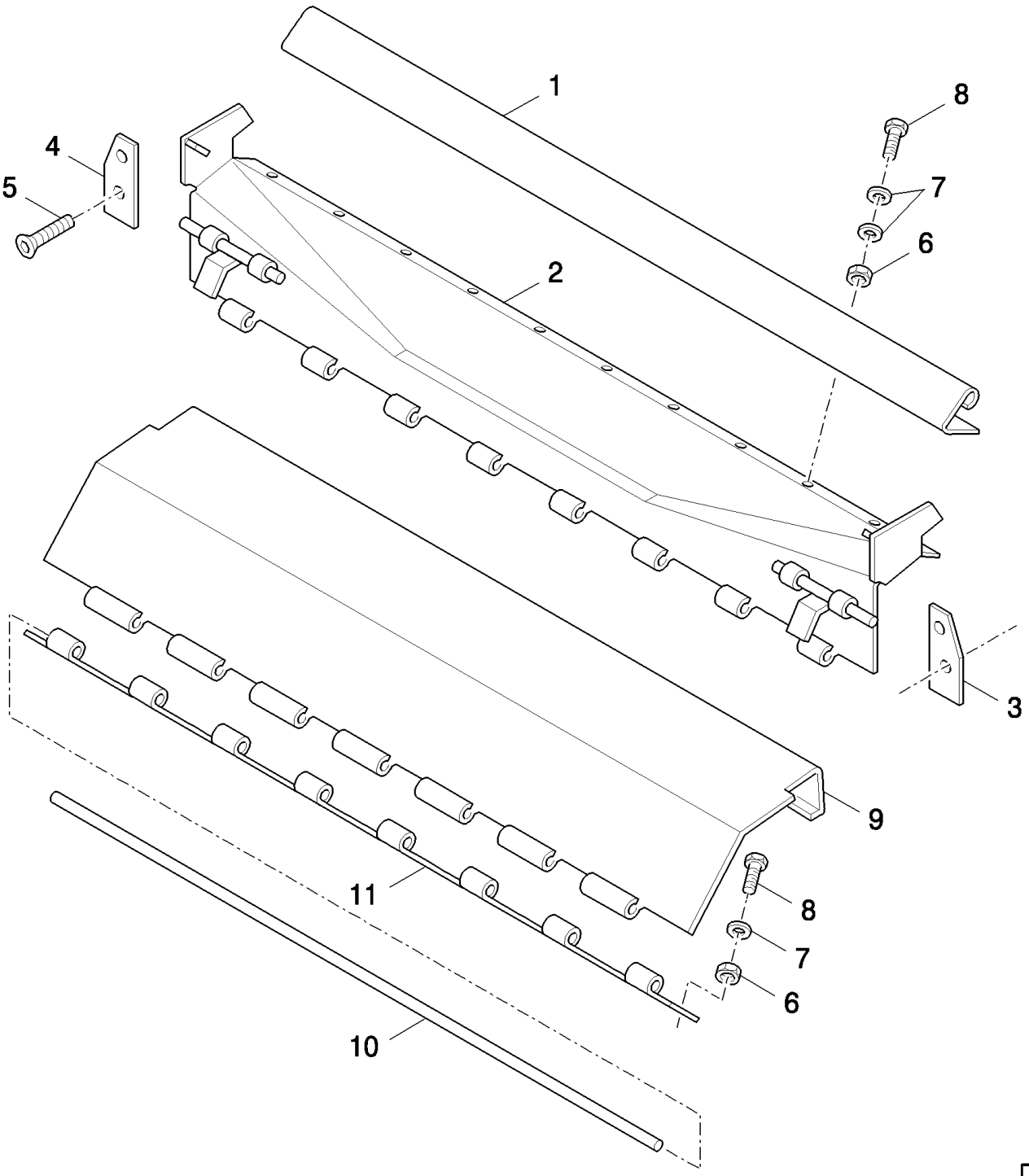

TX68 COMBINE - BASE UNIT

03.01(01) STONE TRAP AND COVER PLATE

ссылка	Номер детали	Кол-во	Описание
1	9850361	1	PLATE, , FOR TX66-67-68 ONLY
1	89850359	1	PLATE, , FOR TX62-63-64-65 ONLY
2	9831026	1	STONE TRAP, , FOR TX66-67-68 ONLY
2	9831364	1	STONE TRAP, , FOR TX62-63-64-65 ONLY
3	9831015	1	PLATE, COVER,
4	9831016	1	PLATE,
5	412495	4	SCREW, Hex Soc Flat Hd, M8 x 20, 8.8, M8x20
6	9706690	14	NUT, M8, Cl 8,
7	322358	24	WASHER, SPRING, Belleville, M8,
8	120104	1	SCREW, Hex, M8 x 20, 8.8,
9	9813887	1	COVER, , FOR TX66-67-68 ONLY
9	9831357	1	COVER, , FOR TX62-63-64-65 ONLY
10	9833923	1	ROD, , FOR TX66-67-68 ONLY
10	9833922	1	ROD, , FOR TX62-63-64-65 ONLY
11	9831012	1	HINGE, , FOR TX66-67-68 ONLY
11	9831356	1	HINGE, , FOR TX62-63-64-65 ONLY

03.02(01) STONE TRAP AND COVER PLATE

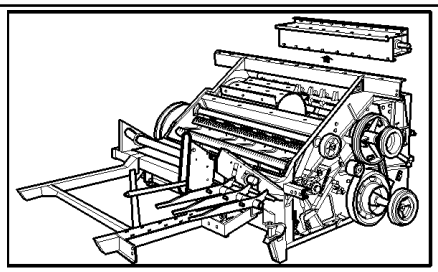

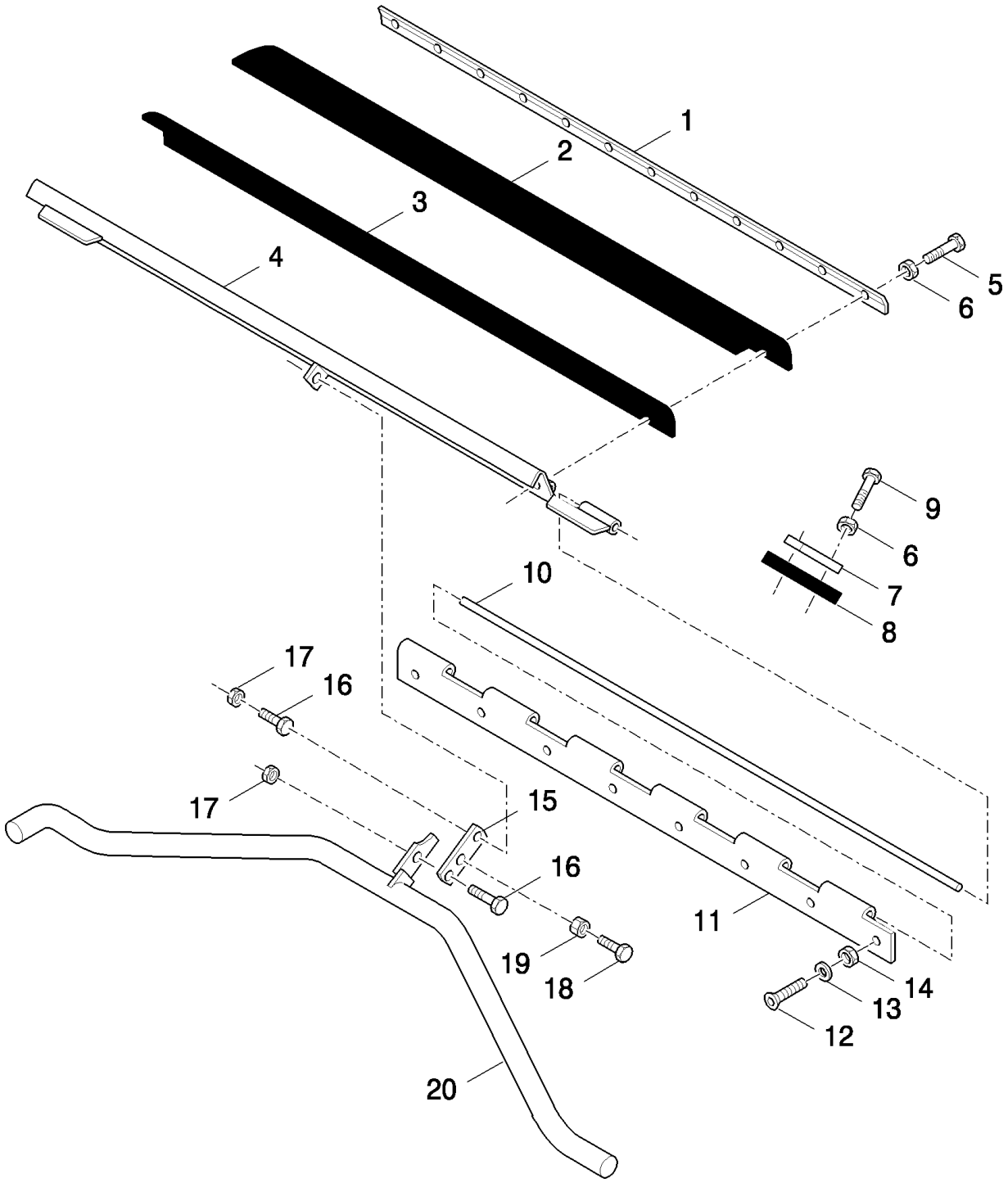

TX68 COMBINE - BASE UNIT

03.02(01) STONE TRAP AND COVER PLATE

ссылка	Номер детали	Кол-во	Описание
1	84000704	1	STRIP, , FOR TX66-67-68 ONLY
1	9815946	1	PLATE, FIXING, , FOR TX62-63-64-65 ONLY
2	9831017	1	CANVAS, , FOR TX66-67-68 ONLY
2	9813902	1	CANVAS, , FOR TX62-63-64-65 ONLY
3	9813936	1	CANVAS, , FOR TX66-67-68 ONLY, -C1265
3	84440840	1	CANVAS, , FOR TX66-67-68 ONLY, -C1315
3	84447129	1	SEAL, , FOR TX66-67-68 ONLY, D1316-
3	9813903	1	CANVAS, , FOR TX62-63-64-65 ONLY, -C1265
3	84440864	1	CANVAS, , FOR TX62-63-64-65 ONLY, -C1315
3	84447130	1	CANVAS, , FOR TX62-63-64-65 ONLY, D1316-
4	9813908	1	COVER, , FOR TX66-67-68 ONLY
4	89831361	1	COVER, , FOR TX62-63-64-65 ONLY
5	120100	10	BOLT, Hex, M6 x 20, 8.8,
6	353308	14	NUT, M6 x 1, Cl 8,
7	9831014	2	CLAMP,
8	84011358	2	CANVAS,
9	86977786	4	BOLT, Hex, M6 x 25, 8.8,
10	390376	1	ROD, , FOR TX66-67-68 ONLY
10	394608	1	ROD, , FOR TX62-63-64-65 ONLY
11	9831013	1	HINGE, , FOR TX66-67-68 ONLY
11	9831012	1	HINGE, , FOR TX62-63-64-65 ONLY
12	412495	7	SCREW, Hex Soc Flat Hd, M8 x 20, 8.8, M8x20
13	322358	7	WASHER, SPRING, Belleville, M8,
14	9706690	7	NUT, M8, Cl 8,
15	9815689	2	PLATE,
16	9706687	2	SCREW, Hex, M12 x 30, 8.8,
17	100038	2	NUT, M12 x 1.75, Cl 8,
18	120104	1	SCREW, Hex, M8 x 20, 8.8,
19	86629542	1	NUT, LOCK, M8 x 1.25, Cl 8,
20	9831022	1	HANDLE, , FOR TX66-68 ONLY
20	89831359	1	HANDLE, , FOR TX62-63-64-65 ONLY
20	84041272	1	HANDLE, , FOR TX67 ONLY

03.03(01) CONCAVE ADJUSTING LEVER

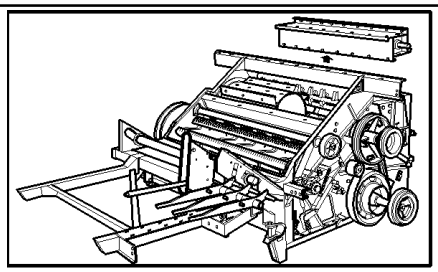

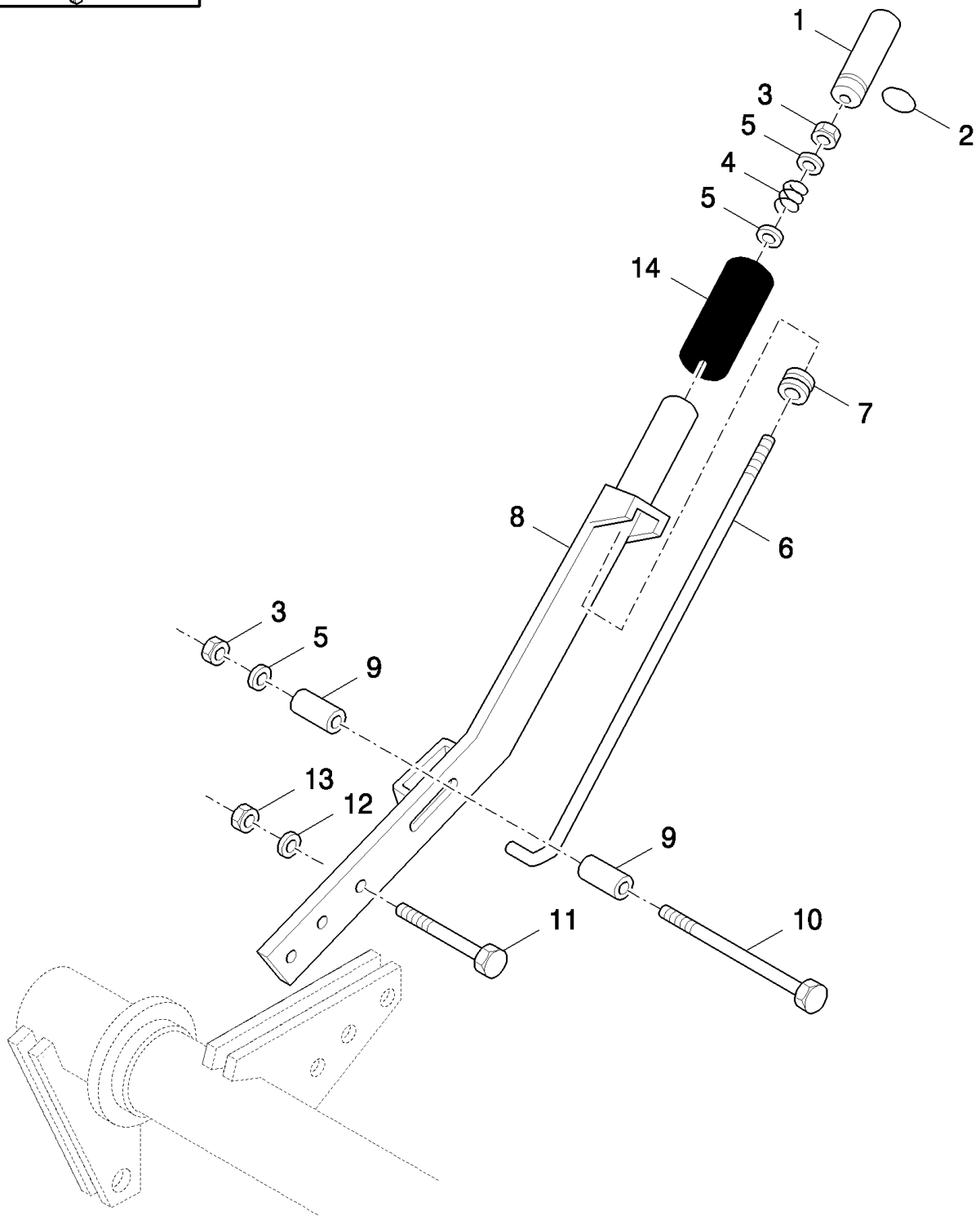

ONLY VALID FROM 4801001 (TX62) - 461033001 (TX63) AND UNTIL 5008999 (TX66) - 5108999 (TX68) / FOR TX63 WITHOUT REMOTE CONTROL

TX68 COMBINE - BASE UNIT

03.03(01) CONCAVE ADJUSTING LEVER

ссылка	Номер детали	Кол-во	Описание
1	9818347	1	PUSH BUTTON,
2	129979	1	O-RING, -115, 70 Duro, .674" ID x .103" Thk,
3	9706690	2	NUT, M8, Cl 8,
4	38527	1	SPRING,
5	322358	3	WASHER, SPRING, Belleville, M8,
6	9814469	1	PAWL,
7	411809	1	GROMMET,
8	9814474	1	HANDLE,
9	9819653	2	BUSHING,
10	43133	1	SCREW, Hex, M8 x 80, 8.8,
11	86629541	2	BOLT, Hex, M12 x 40, 8.8, Full Thd,
12	394630	2	WASHER, 12MM
13	337475	2	NUT, M12, Cl 10,
14	332749	1	HANDLE GRIP,

ONLY VALID FROM 4801001 (TX62) - 461033001 (TX63) AND UNTIL 5008999 (TX66) - 5108999 (TX68) / FOR TX63 WITHOUT REMOTE CONTROL

03.04(01) CONCAVE ADJUSTING ACTUATOR

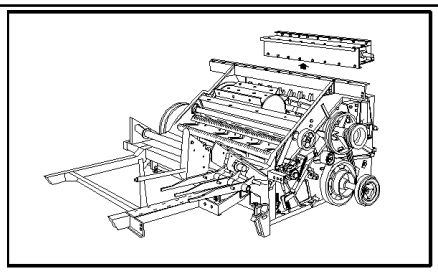

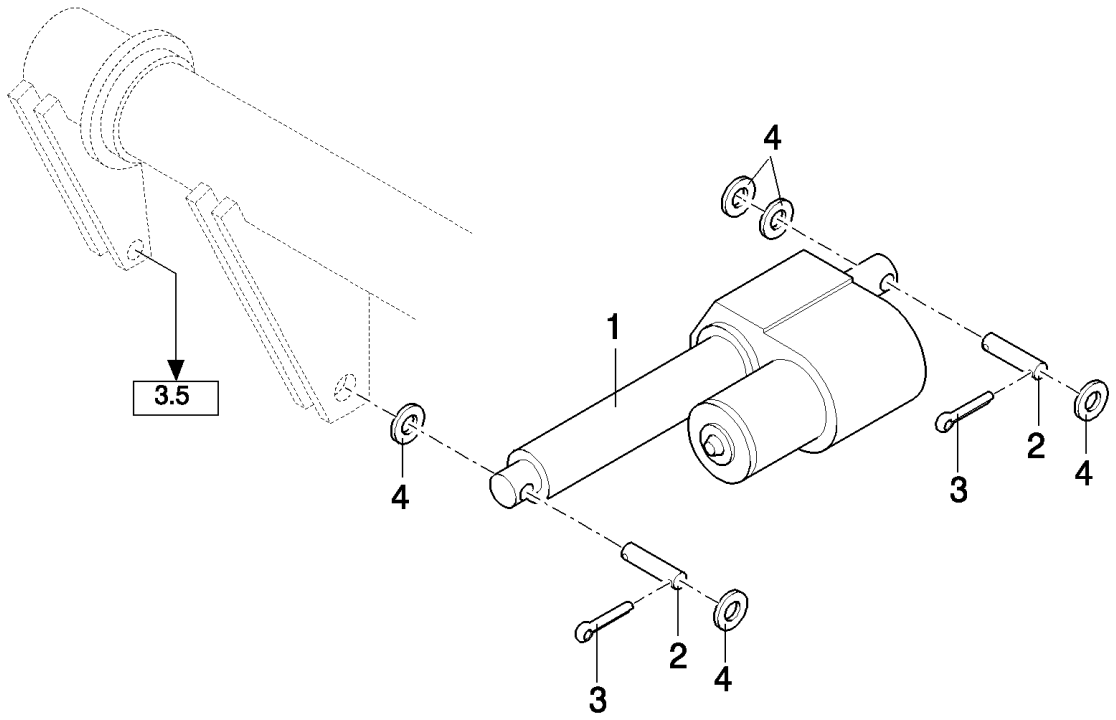

ONLY VALID FROM 4901001 (TX64) - 6601001 (TX65) - 5009001 (TX66) - 4404001 (TX67) - 5109001 (TX68) / FOR TX63 WITH REMOTE CONTROL ONLY

TX68 COMBINE - BASE UNIT

03.04(01) CONCAVE ADJUSTING ACTUATOR

ссылка	Номер детали	Кол-во	Описание
1	84012749	1	ACTUATOR,
2	84017216	2	PIN,
3	130003	4	PIN, SPLIT (COTTER), M3.2 x 20,
4	378245	5	WASHER, M12,

ONLY VALID FROM 4901001 (TX64) - 6601001 (TX65) - 5009001 (TX66) - 4404001 (TX67) - 5109001 (TX68) / FOR TX63 WITH REMOTE CONTROL ONLY

03.05(01) CONCAVE ADJUSTING LEVER SUSPENSION LINKAGE

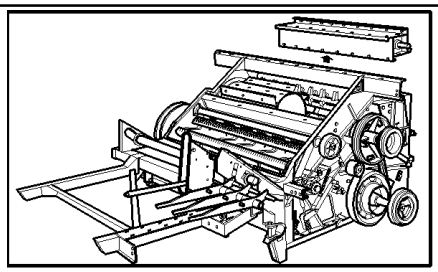

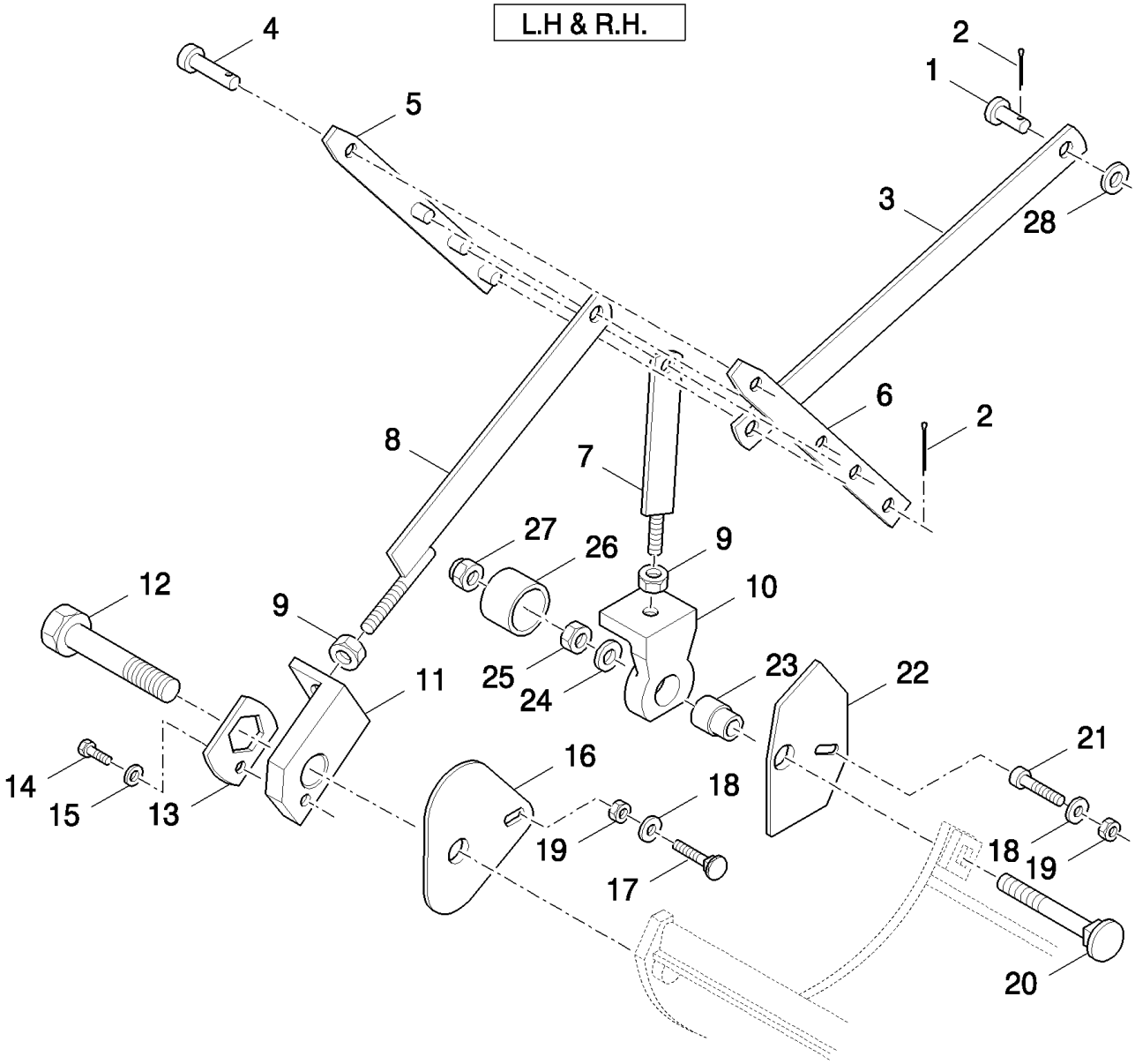

TX68 COMBINE - BASE UNIT

03.05(01) CONCAVE ADJUSTING LEVER SUSPENSION LINKAGE

ссылка	Номер детали	Кол-во	Описание
1	380840	2	PIN, CLEVIS, M16 x 30,
2	130007	10	PIN, SPLIT (COTTER), M4 x 25,
3	9814468	2	LINK/SHACKLE,
4	9850761	2	PIN, CLEVIS, M16 x 60, , -C7520
4	362528	2	PIN, CLEVIS, M16 x 55, , D7520-
5	84320623	2	LEVER,
6	84320622	2	LEVER,
7	429821	2	ARM,
8	429823	1	ARM, LH
8	429824	1	ARM, RH
9	100020	8	NUT, M16, Cl 8,
10	748975	2	SUPPORT,
11	428146	2	SUPPORT,
12	395528	2	SCREW, Hex, M20 x 100, 8.8, M20x100
13	434568	2	PLATE, LOCKING,
14	378056	2	BOLT, Hex, M6 x 10, 8.8, Full Thd,
15	322357	2	WASHER, SPRING, Belleville, M6,
16	429815	2	PLATE,
17	86507486	2	BOLT, CARRIAGE, Short NK, M8 x 20, Cl8.8, Full Thd,
18	378243	5	WASHER, M8,
19	86629542	4	NUT, LOCK, M8 x 1.25, Cl 8,
20	84007392	2	BOLT, CARRIAGE, Short NK, M20 x 100, Cl8.8,
21	120228	2	SCREW, Hex Soc Hd, M8 x 20, 8.8,
22	9512081	2	PLATE,
23	84007393	2	SPACER,
24	328431	2	WASHER, LOCK,
25	9706694	2	NUT, M20, Cl 8,
26	84007394	2	BUSHING,
27	9672396	2	NUT, LOCK,
28	140090	4	WASHER,

03.06(01) CONCAVE WITH DE-AWNING SLATS

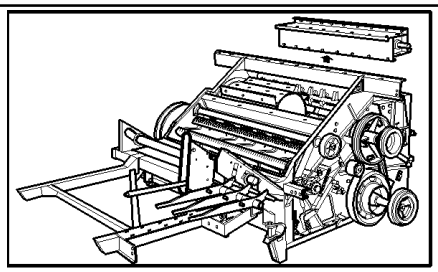

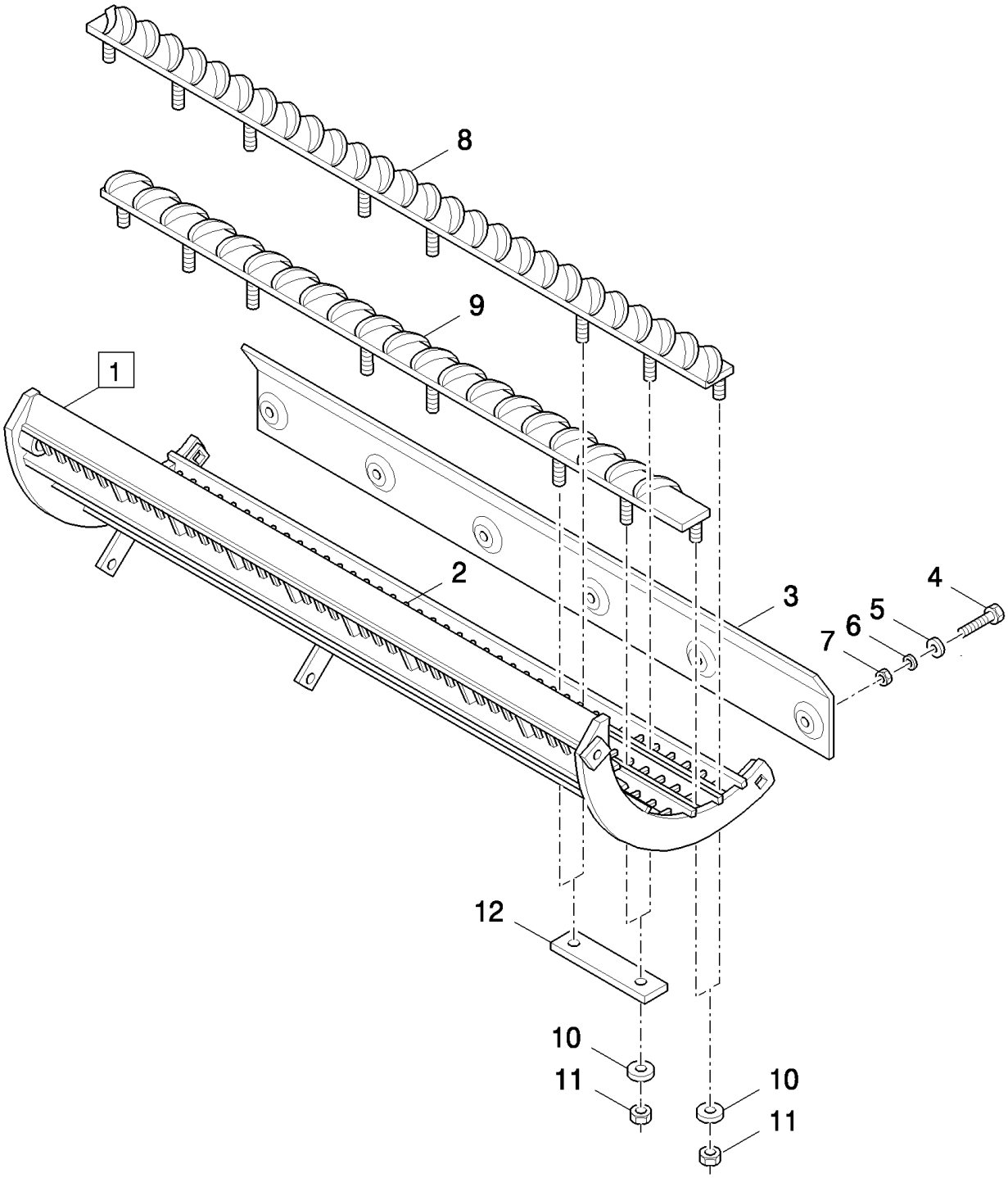

TX68 COMBINE - BASE UNIT

03.06(01) CONCAVE WITH DE-AWNING SLATS

ссылка	Номер детали	Кол-во	Описание
1	9503462	1	CONCAVE, MODERATE (2), FOR TX66-68 ONLY, -C5500
1	84023204	1	CONCAVE, MODERATE (2), FOR TX66-67-68 ONLY, D5500-
1	9503460	1	CONCAVE, MODERATE (2), FOR TX62-63-64-65 ONLY
1	9512666	1	CONCAVE, UNIVERSAL (2), FOR TX66-68 ONLY, -C5500
1	84023205	1	CONCAVE, UNIVERSAL (2), FOR TX66-67-68 ONLY, D5500-
1	9512665	1	CONCAVE, UNIVERSAL (2), FOR TX62-63-64-65 ONLY
2	9832756	AR	WIRE, RETAINING, (MODERATE CONCAVE)
2	430709	AR	WIRE, RETAINING, (UNIVERSAL CONCAVE)
3	750244	1	PLATE, , FOR TX66-67-68 ONLY
3	748706	1	PLATE, , FOR TX62-63-64-65 ONLY
4	120201	6	BOLT, Hex, M10 x 35, 8.8, Full Thd, , FOR TX66-67-68 ONLY
4	43140	6	BOLT, Hex, M10 x 30, 8.8, Full Thd, , FOR TX62-63-64-65 ONLY
5	378244	6	WASHER, M10,
6	394629	6	WASHER, LOCK, 10MM
7	100037	6	NUT, M10 x 1.5, Cl 8,
8	84015717	1	DE AWNER, (MODERATE CONCAVE), FOR TX66-67-68 ONLY, -C1237
8	84814223	1	DE AWNER, (MODERATE CONCAVE), FOR TX66-67-68 ONLY, D1238-
8	84015713	1	DE AWNER, , FOR TX62-63-64-65 ONLY
8	84015721	1	DE AWNER, (UNIVERSAL CONCAVE), FOR TX66-67-68 ONLY, -C1237
8	84814221	1	DE AWNER, (UNIVERSAL CONCAVE), FOR TX66-67-68 ONLY, D1238-
9	84015715	1	DE AWNER, (MODERATE CONCAVE), FOR TX66-67-68 ONLY, -C1237
9	84814227	1	DE AWNER, (MODERATE CONCAVE), FOR TX66-67-68 ONLY, D1238-
9	84015711	1	DE AWNER, , FOR TX62-63-64-65 ONLY
9	84015719	1	DE AWNER, (UNIVERSAL CONCAVE), FOR TX66-67-68 ONLY, -C1237
9	84814225	1	DE AWNER, (UNIVERSAL CONCAVE), FOR TX66-67-68 ONLY, D1238-
10	140041	AR	WASHER, M8 x 28 x 3,
11	412250	AR	NUT, LOCK, M8 x 1.25, Cl 8,
12	9832998	AR	PLATE, FIXING,

03.07(01) DE-AWNING PLATES

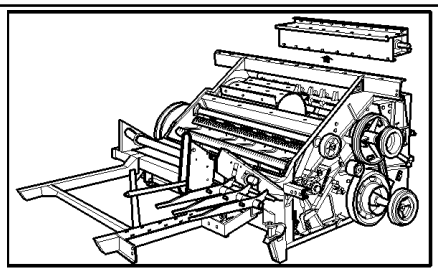

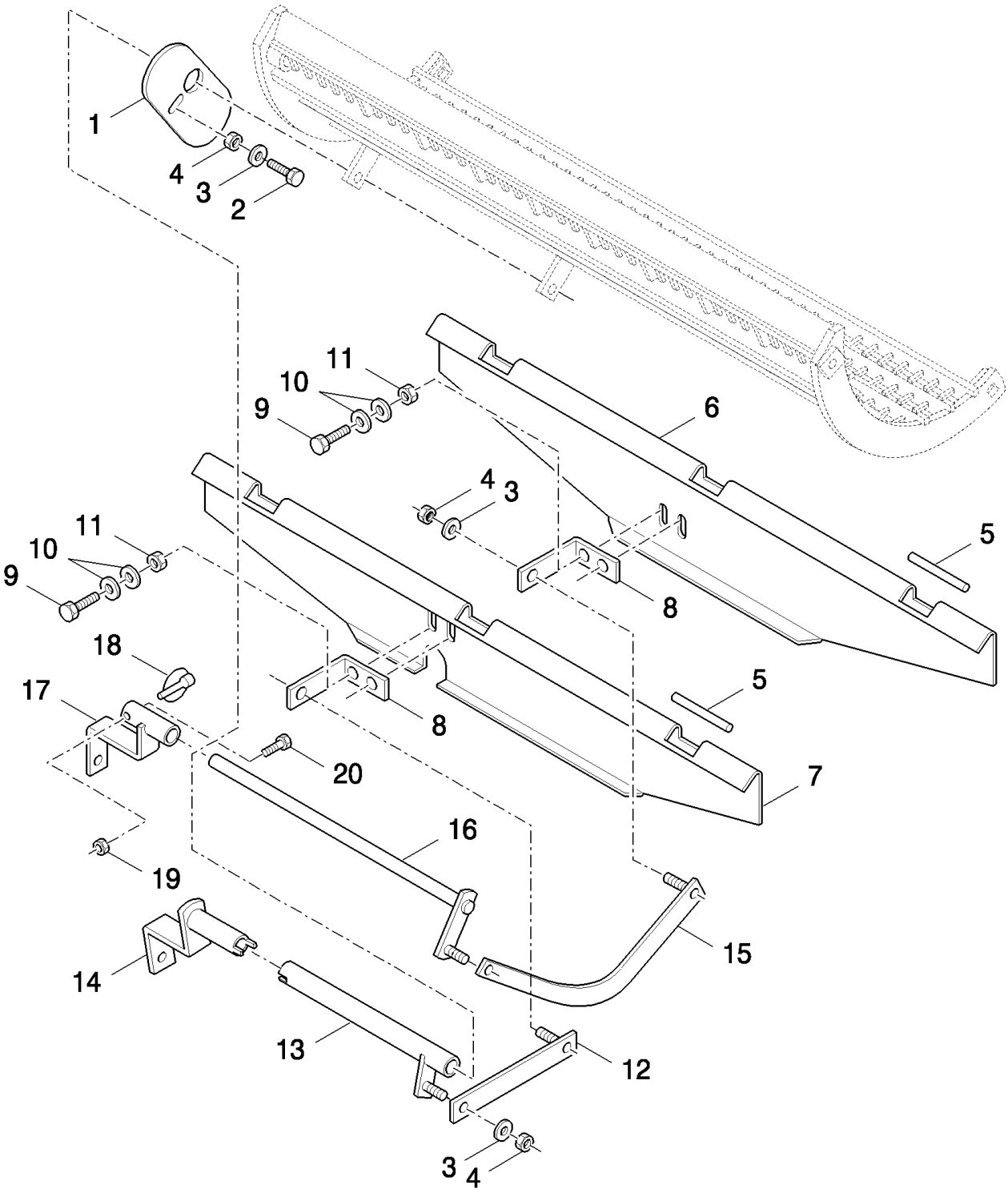

FOR MODERATE AND UNIVERSAL CONCAVE ONLY

TX68 COMBINE - BASE UNIT

03.07(01) DE-AWNING PLATES

ссылка	Номер детали	Кол-во	Описание
1	753973	1	PLATE,
2	120104	1	SCREW, Hex, M8 x 20, 8.8,
3	378243	5	WASHER, M8,
4	100037	5	NUT, M10 x 1.5, Cl 8, M8
5	380093	6	SHAFT,
6	9503458	1	PLATE, , FOR TX66-68 ONLY, -C5510
6	84014984	1	PLATE, , FOR TX66-67-68 ONLY, D5510-
6	9503450	1	SCREW, , FOR TX62-63-64-65 ONLY
7	9503459	1	PLATE, , FOR TX66-68 ONLY, -C5510
7	84023149	1	PLATE, , FOR TX66-67-68 ONLY, D5510-
7	9503451	1	PLATE, , FOR TX62-64-65 ONLY, -C6630
7	84036937	1	PLATE, , FOR TX62-63-64-65 ONLY, D6630-
8	9503470	2	BRACKET,
9	120100	4	BOLT, Hex, M6 x 20, 8.8,
10	412649	8	WASHER, SPRING, Belleville, M6,
11	15896221	4	NUT, M6, Cl 10,
12	9503472	1	LEVER, , FOR TX66-68 ONLY, -C5500
12	84022932	1	LEVER, , FOR TX66-67-68 ONLY, D5500-
12	9503472	1	LEVER, , FOR TX62-63-64-65 ONLY
13	754448	1	LEVER,
14	753969	1	HANDLE, , -C5500
14	84023271	1	HANDLE, , D5500-
15	9503474	1	LEVER,
16	9833244	1	LEVER,
17	9833247	1	HANDLE, , -C5500
17	84023274	1	HANDLE, , D5500-
18	9832679	1	PIN, SPLIT (COTTER), , -C5500
19	412152	1	NUT, LOCK, M6 x 1, Cl 8.8, , D5500-
20	120101	1	BOLT, Hex, M6 x 30, 8.8, Full Thd, , D5500-

FOR MODERATE AND UNIVERSAL CONCAVE ONLY

03.08(01) CORN CONCAVE FOR STANDARD DRUM

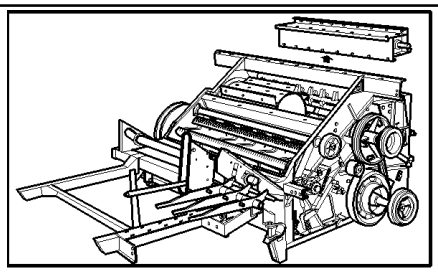

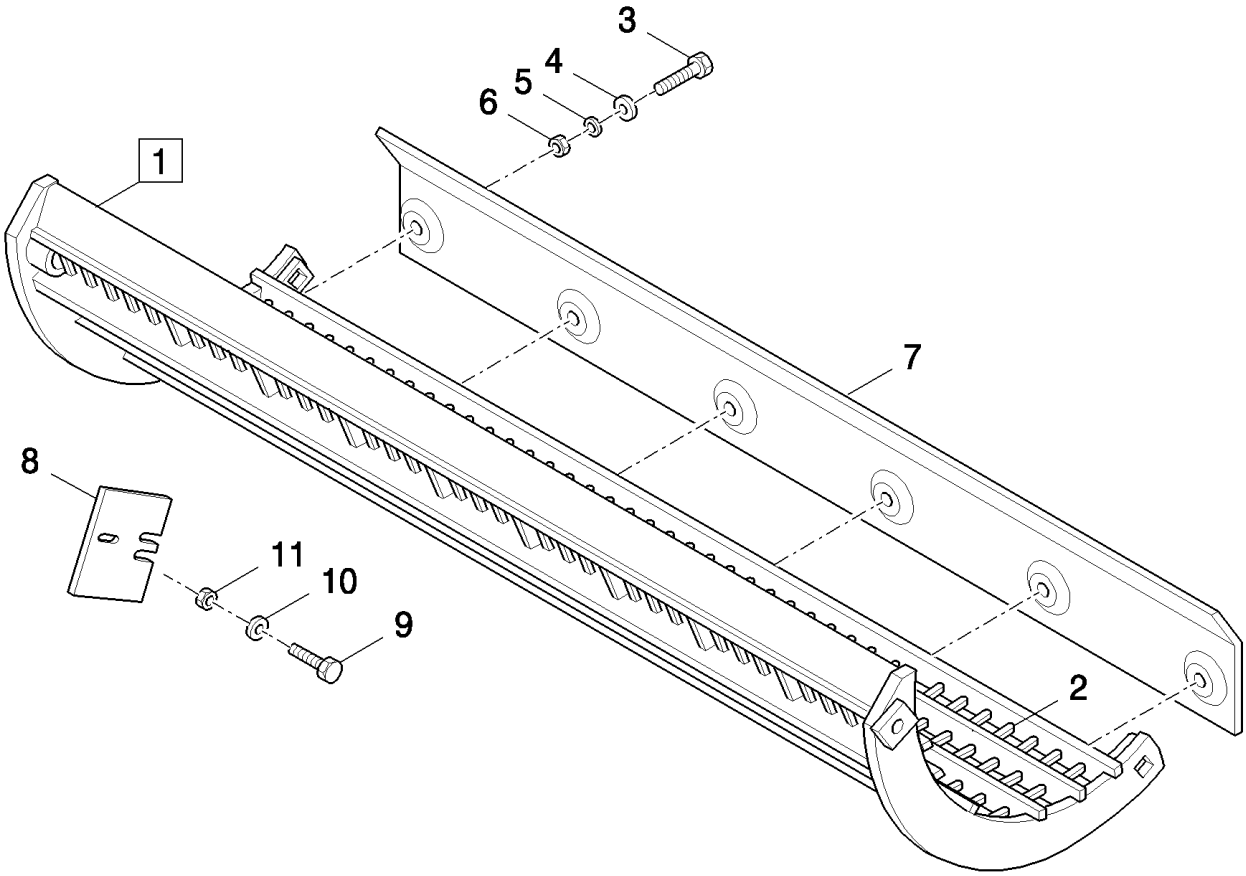

TX68 COMBINE - BASE UNIT

03.08(01) CORN CONCAVE FOR STANDARD DRUM

ссылка	Номер детали	Кол-во	Описание
1	9811204	1	CONCAVE, (2), FOR TX66-68 ONLY
1	9811203	1	CONCAVE, (2), FOR TX62-64-65 ONLY
2	9502036	49	WIRE, RETAINING, , -C1032
2	9502024	49	WIRE, RETAINING, , D1033-
3	43140	6	BOLT, Hex, M10 x 30, 8.8, Full Thd,
4	394629	6	WASHER, LOCK, 10MM
5	140045	6	WASHER, SPRING, Belleville, M10,
6	100016	6	NUT, M10, Cl 8,
7	750244	1	PLATE, , FOR TX66-68 ONLY
7	748706	1	PLATE, , FOR TX62-64-65 ONLY
8	918858	1	PLATE,
9	120104	1	SCREW, Hex, M8 x 20, 8.8,
10	322358	1	WASHER, SPRING, Belleville, M8,
11	9706690	1	NUT, M8, Cl 8,

03.09(01) SPIKE TOOTH CONCAVE 56 AND 84

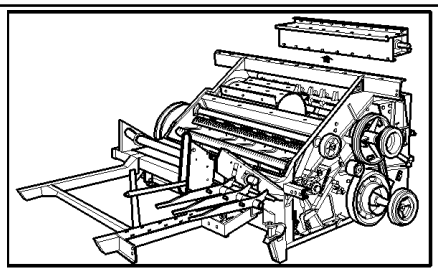

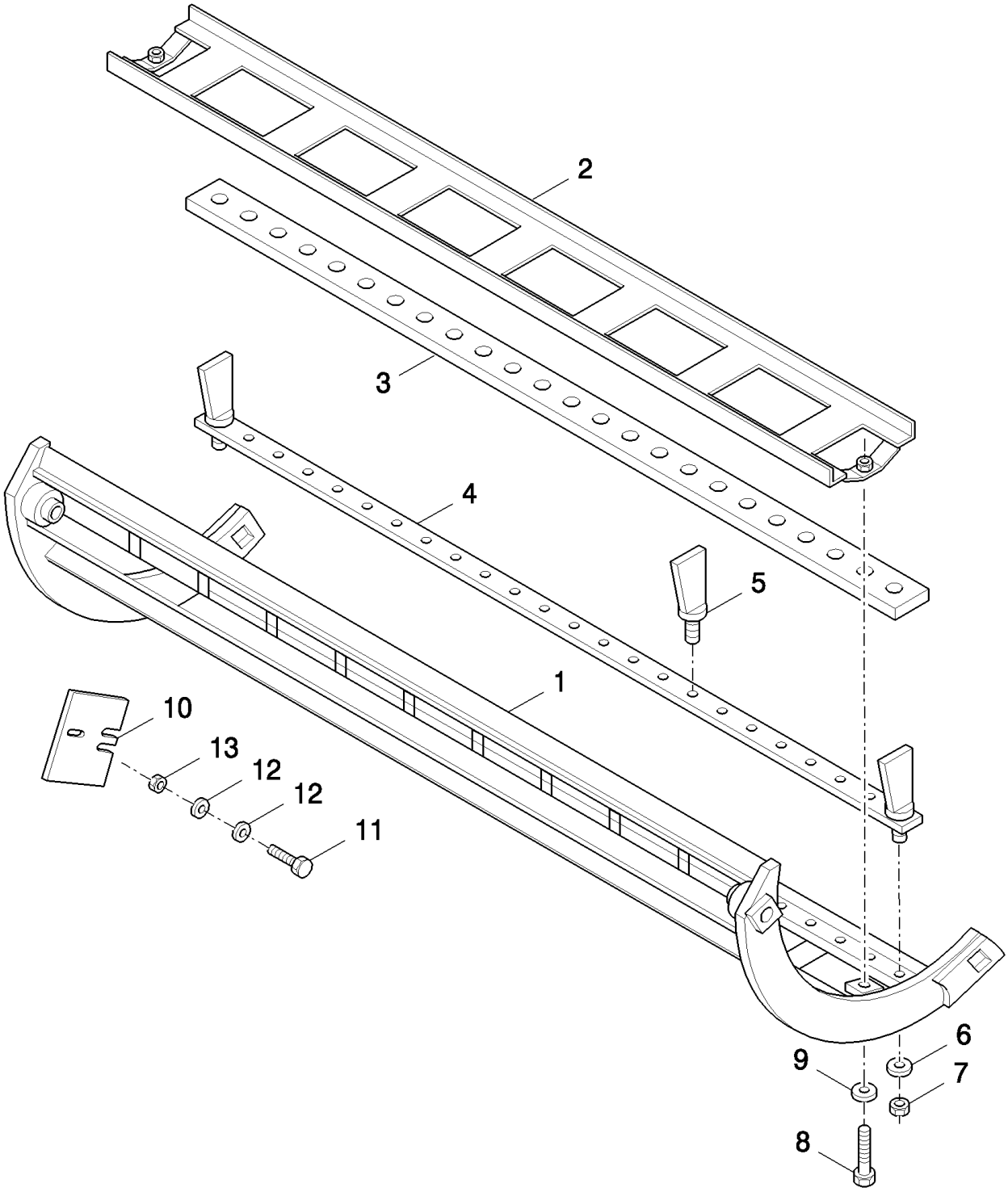

TX68 COMBINE - BASE UNIT

03.09(01) SPIKE TOOTH CONCAVE 56 AND 84

ссылка	Номер детали	Кол-во	Описание
1	9817453	1	CONCAVE, 56MM, FOR TX66-68 ONLY
1	9817451	1	CONCAVE, 56MM, FOR TX62-63-64-65 ONLY
1	9817525	1	CONCAVE, 84MM, FOR TX66-68 ONLY
1	9817526	1	CONCAVE, 84MM, FOR TX62-63-64-65 ONLY
2	84038642	2	GRILLE, , FOR TX66-68 ONLY
2	84038643	2	GRILLE, , FOR TX62-63-64-65 ONLY
3	411304	2	PLATE, FIXING, -56, FOR TX66-68 ONLY
3	399655	2	LATH, -56, FOR TX62-63-64-65 ONLY
3	9502466	1	PLATE, FIXING, -84, FOR TX66-68 ONLY
3	80922586	1	PLATE, FIXING, -84, FOR TX62-63-64-65 ONLY
4	411298	1	PLATE, FIXING, -56, FOR TX66-68 ONLY
4	399656	1	LATH, -56, FOR TX62-63-64-65 ONLY
4	9502467	2	PLATE, FIXING, -84, FOR TX66-68 ONLY
4	80922581	2	PLATE, FIXING, -84, FOR TX62-63-64-65 ONLY
5	396935	AR	TOOTH, RICE,
6	394631	AR	WASHER, 16MM
6	333041	AR	WASHER, CENTERING
7	86000441	AR	NUT, M16 x 2, Cl 8,
8	43138	4	SCREW, Hex, M10 x 20, 8.8, Full Thd,
9	140045	4	WASHER, SPRING, Belleville, M10,
10	918858	1	PLATE,
11	120104	1	SCREW, Hex, M8 x 20, 8.8,
12	322358	2	WASHER, SPRING, Belleville, M8,
13	9706690	AR	NUT, M8, Cl 8,

03.10(01) STANDARD DRUM

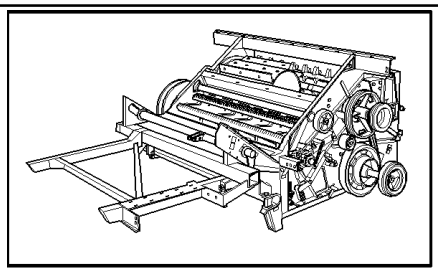

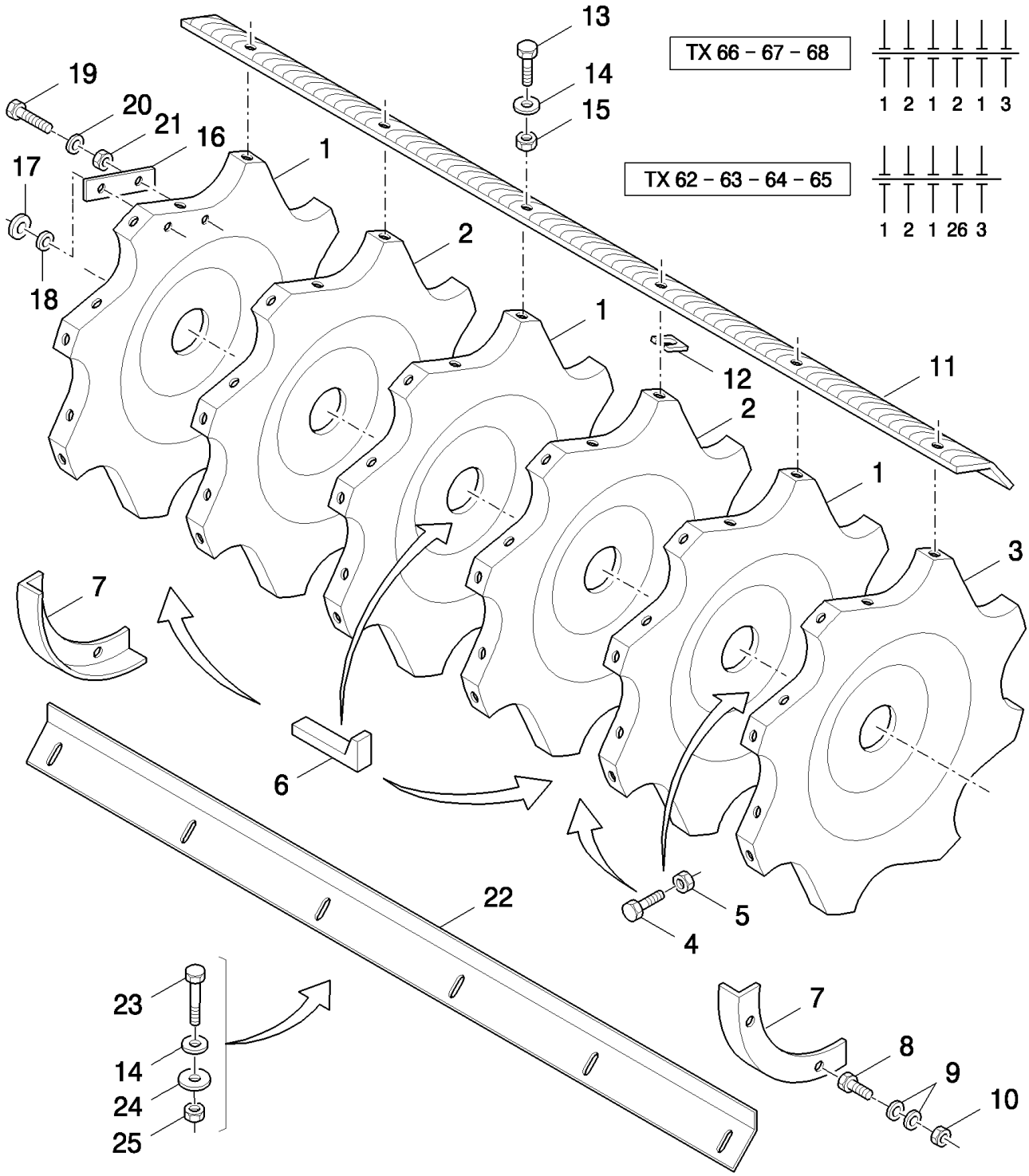

TX68 COMBINE - BASE UNIT

03.10(01) STANDARD DRUM

ссылка	Номер детали	Кол-во	Описание
1	750269	3	DISC, , FOR TX66-67-68 ONLY
1	750269	2	DISC, , FOR TX62-63-64-65 ONLY
2	394487	2	DISC, , FOR TX66-67-68 ONLY
2	394487	1	DISC, , FOR TX62-63-64-65 ONLY
3	913377	1	DISC, , FOR TX66-67-68 ONLY
3	750268	1	DISC, , FOR TX62-63-64-65 ONLY, -C1229
3	913377	1	DISC, , FOR TX62-63-64-65 ONLY, D1230-
4	43158	1	BOLT, Hex, M12 x 80, 8.8,
5	100038	1	NUT, M12 x 1.75, Cl 8,
6	426210	3	KEY,
7	9814424	2	SHIELD,
8	86977786	4	BOLT, Hex, M6 x 25, 8.8,
9	140015	8	WASHER, 6MM
10	353308	4	NUT, M6 x 1, Cl 8,
11	9838439	2	RASP BAR SET, LH, FOR TX66-67-68 ONLY
11	9838436	2	RASP BAR SET, LH, FOR TX62-63-64-65 ONLY
11	9838438	2	RASP BAR SET, RH, FOR TX66-67-68 ONLY
11	9838437	2	RASP BAR SET, RH, FOR TX62-63-64-65 ONLY
12	362841	AR	PLATE, ADJUSTING, THK.:2MM
12	80481491	AR	PLATE, ADJUSTING, THK.:1MM
13	385376	AR	SCREW, M12x30
14	394630	AR	WASHER,
15	337475	AR	NUT, M12, Cl 10,
16	481494	AR	PLATE, , -C1241
16	351518	AR	PLATE, ADJUSTING, , D1242-
17	378245	AR	WASHER, M12,
18	140041	AR	WASHER, M8 x 28 x 3,
19	43128	AR	BOLT, Hex, M8 x 30, 8.8,
20	322358	AR	WASHER, SPRING, Belleville, M8,
21	9706690	AR	NUT, M8, Cl 8,
22	437414	8	PLATE, , FOR TX66-67-68 ONLY
22	431580	8	PLATE, , FOR TX62-63-64-65 ONLY
23	9706687	AR	SCREW, Hex, M12 x 30, 8.8,
24	140085	AR	WASHER,
25	100038	AR	NUT, M12 x 1.75, Cl 8,
26	394487	AR	DISC, , FOR TX62-63-64-65 ONLY, -C1229
26	750269	AR	DISC, , FOR TX62-63-64-65 ONLY, D1230-

03.11(01) INERTIA DRUM

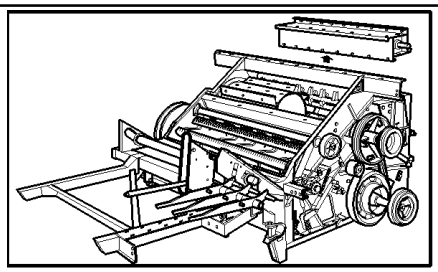

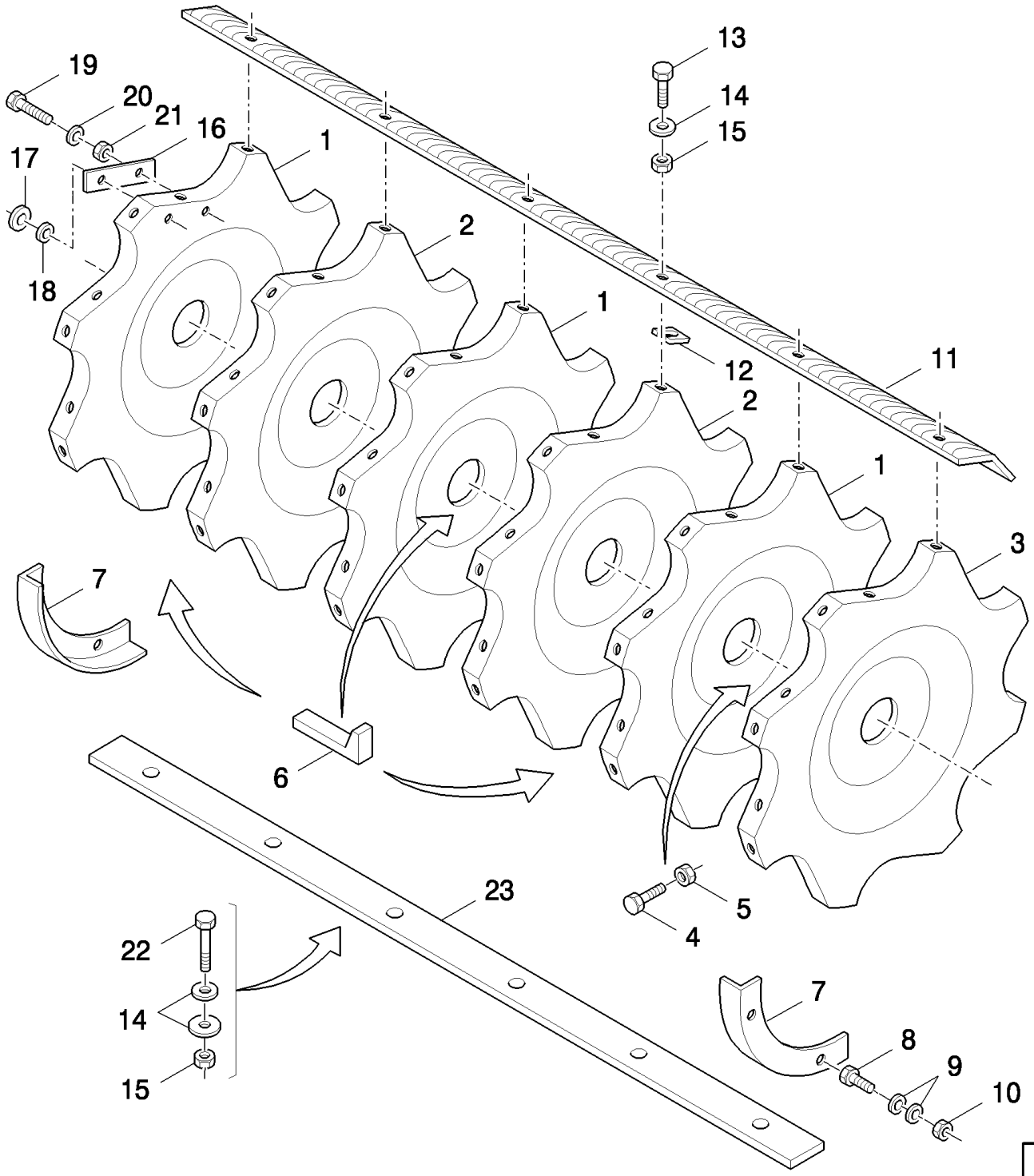

TX68 COMBINE - BASE UNIT

03.11(01) INERTIA DRUM

ссылка	Номер детали	Кол-во	Описание
1	84032838	3	DISC, LH
2	80394346	2	DISC, MIDDLE
3	84032836	1	DISC, RH
4	43158	1	BOLT, Hex, M12 x 80, 8.8,
5	100038	1	NUT, M12 x 1.75, Cl 8,
6	426210	3	KEY,
7	9814424	2	SHIELD,
8	86977786	4	BOLT, Hex, M6 x 25, 8.8,
9	140015	8	WASHER, 6MM
10	353308	4	NUT, M6 x 1, Cl 8,
11	9838439	2	RASP BAR SET, LH
11	9838438	2	RASP BAR SET, RH
12	362841	AR	PLATE, ADJUSTING, THK.:2MM
12	80481491	AR	PLATE, ADJUSTING, THK.:1MM
13	385376	AR	SCREW, M12x30
14	394630	AR	WASHER,
15	337475	AR	NUT, M12, Cl 10,
16	481494	AR	PLATE, , -C1241
16	351518	AR	PLATE, ADJUSTING, , D1242-
17	378245	AR	WASHER, M12,
18	140041	AR	WASHER, M8 x 28 x 3,
19	43128	AR	BOLT, Hex, M8 x 30, 8.8,
20	322358	AR	WASHER, SPRING, Belleville, M8,
21	9706690	AR	NUT, M8, Cl 8,
22	9509260	AR	BOLT, Hex Lock, M12 x 45, 8.8, Full Thd,
23	84018250	8	PLATE,

03.12(01) STANDARD DRUM, SHAFT AND BEARINGS

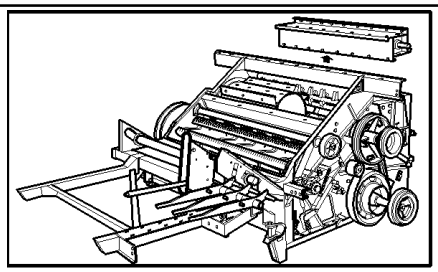

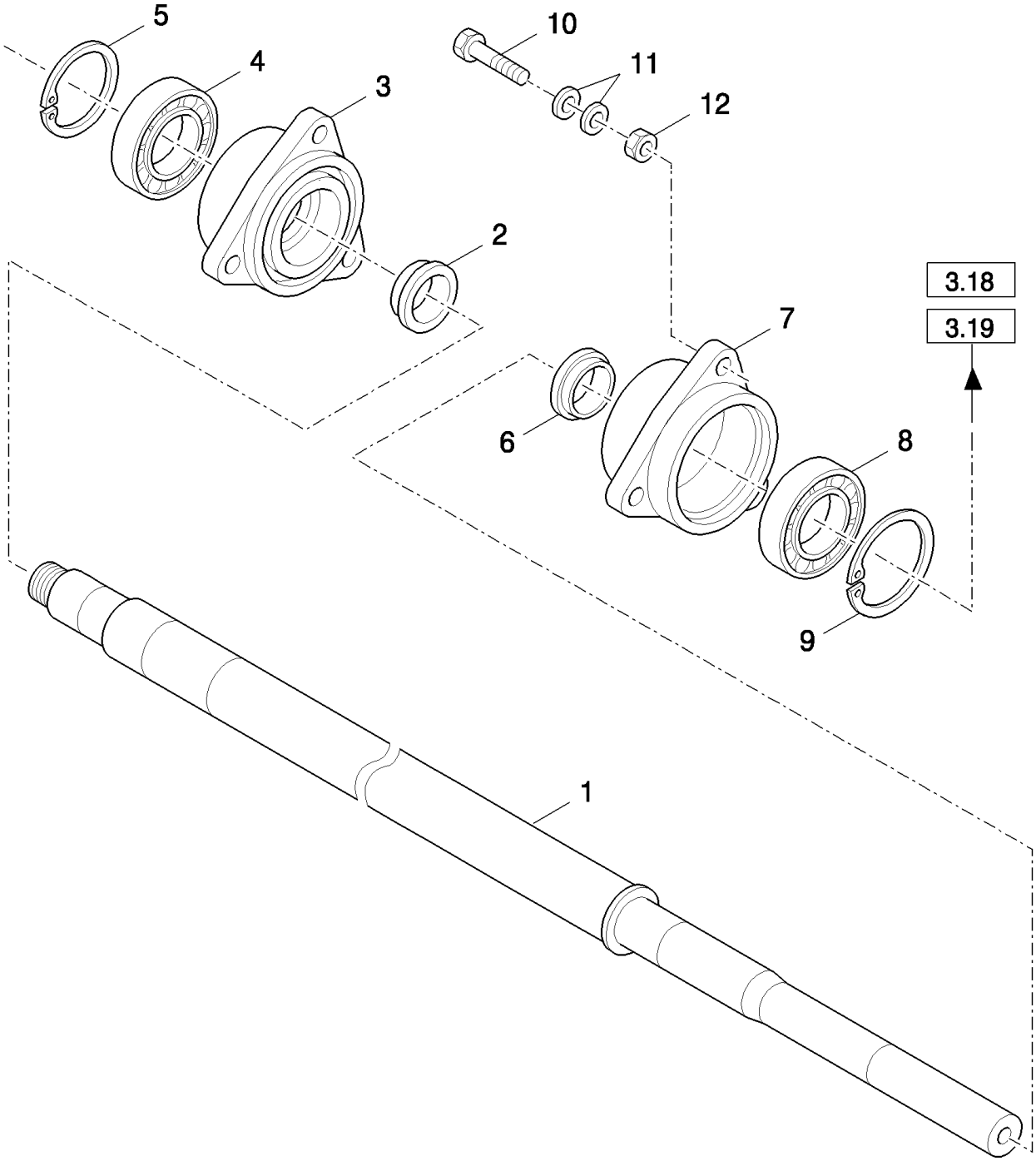

TX68 COMBINE - BASE UNIT

03.12(01) STANDARD DRUM, SHAFT AND BEARINGS

ссылка	Номер детали	Кол-во	Описание
1	9850686	1	SHAFT, , FOR TX66-67-68 ONLY
1	9850768	1	SHAFT, , FOR TX62-63-64-65 ONLY, -C1229
1	84807527	1	SHAFT, , FOR TX62-63-64-65 ONLY, D1230-
2	388669	1	RING, LH
3	439605	1	HOUSING, BEARING, LH
4	388069	1	BEARING ASSY, LH
5	301652	1	RING, SNAP, M110, Int, LH
6	750270	1	RING, RH
7	750291	1	HOUSING, BEARING, RH
8	412274	1	BEARING ASSY, RH
9	412270	1	RING, SNAP, M120, Int, RH
10	43140	6	BOLT, Hex, M10 x 30, 8.8, Full Thd,
11	140045	12	WASHER, SPRING, Belleville, M10,
12	100016	6	NUT, M10, Cl 8,

03.13(01) DRUM, UNIVERSAL

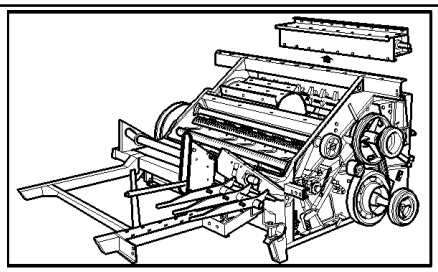

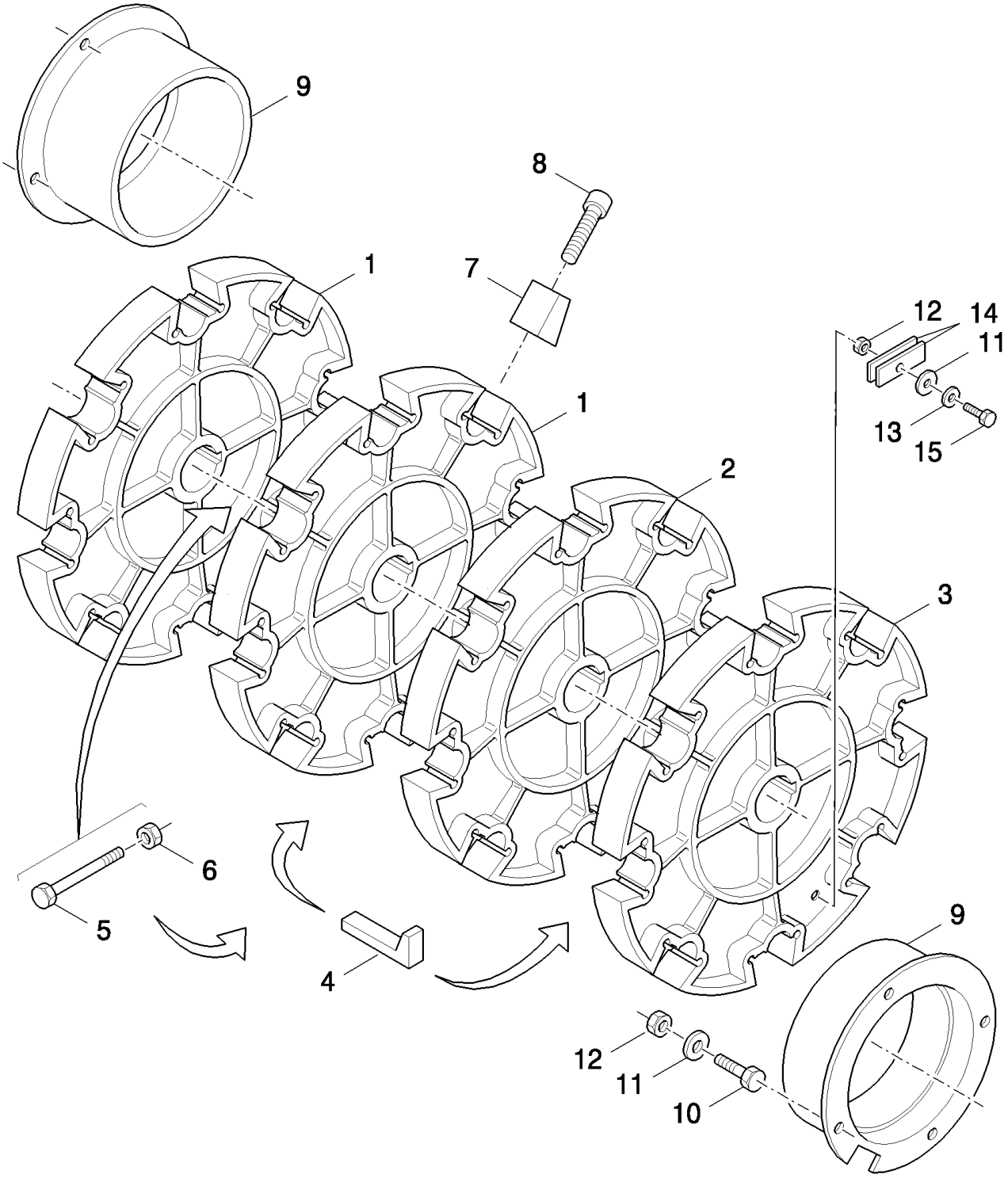

TX68 COMBINE - BASE UNIT

03.13(01) DRUM, UNIVERSAL

ссылка	Номер детали	Кол-во	Описание
1	750342	2	DISC,
2	750341	1	DISC,
3	918977	1	DISC, , FOR TX66-68 ONLY
3	750341	1	DISC, , FOR TX62-63-64-65 ONLY, -C1229
3	918977	1	DISC, , FOR TX62-63-64-65 ONLY, D1230-
4	426210	AR	KEY,
5	43158	1	BOLT, Hex, M12 x 80, 8.8, , FOR TX66-68 ONLY
5	43158	1	BOLT, Hex, M12 x 80, 8.8, , FOR TX62-63-64-65 ONLY, D1230-
6	100038	1	NUT, M12 x 1.75, Cl 8, , FOR TX66-68 ONLY
6	100038	1	NUT, M12 x 1.75, Cl 8, , FOR TX62-63-64-65 ONLY, D1230-
7	436440	32	CLIP,
8	300443	32	SCREW, M10x35
9	436534	2	SHIELD,
10	120104	8	SCREW, Hex, M8 x 20, 8.8,
11	322358	AR	WASHER, SPRING, Belleville, M8,
12	9706690	AR	NUT, M8, Cl 8,
13	378243	AR	WASHER, M8,
14	351518	AR	PLATE, ADJUSTING,
15	43128	AR	BOLT, Hex, M8 x 30, 8.8,

03.14(01) RASP BARS FOR UNIVERSAL DRUM

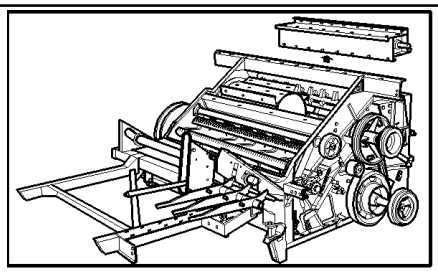

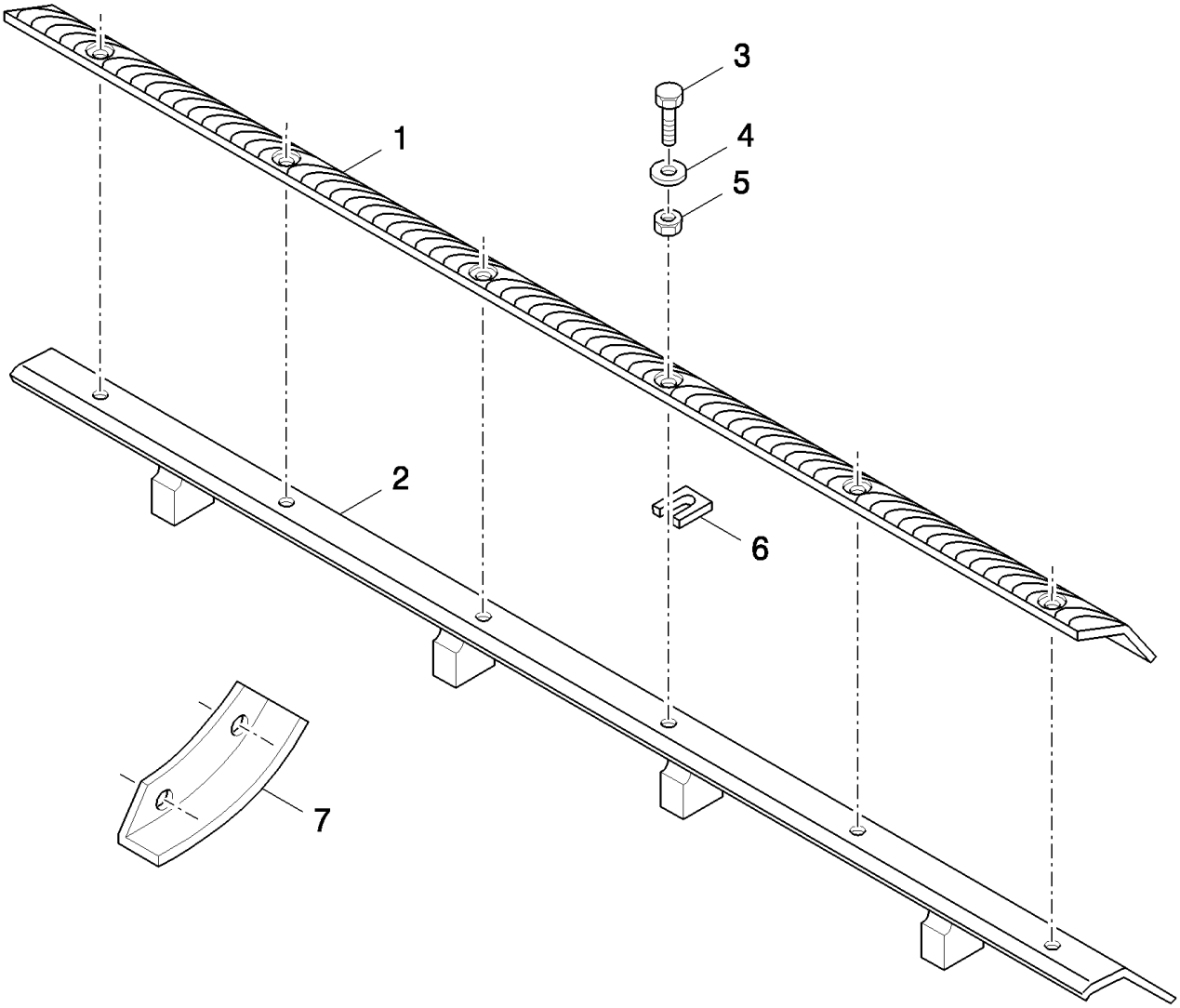

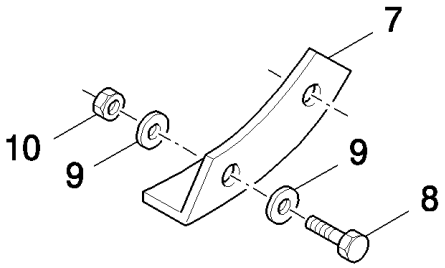

TX68 COMBINE - BASE UNIT

03.14(01) RASP BARS FOR UNIVERSAL DRUM

ссылка	Номер детали	Кол-во	Описание
1	9838439	2	RASP BAR SET, LH, FOR TX66-67-68 ONLY
1	9838436	2	RASP BAR SET, LH, FOR TX62-63-64-65 ONLY
1	9838438	2	RASP BAR SET, RH, FOR TX66-67-68 ONLY
1	9838437	2	RASP BAR SET, RH, FOR TX62-63-64-65 ONLY
2	456197	4	SUPPORT, (SET OF 2), FOR TX66-67-68 ONLY
2	448903	4	SUPPORT, (SET OF 2), FOR TX62-63-64-65 ONLY
3	385376	AR	SCREW, M12x30
4	394630	AR	WASHER, 12MM
5	337475	AR	NUT, M12, Cl 10,
6	362841	AR	PLATE, ADJUSTING, THK.:2MM
6	80481491	AR	PLATE, ADJUSTING, THK.:1MM, -C1241
6	351518	AR	PLATE, ADJUSTING, , D1242-
7	9814424	2	SHIELD,
8	86977786	4	BOLT, Hex, M6 x 25, 8.8,
9	140015	8	WASHER,
10	353308	4	NUT, M6 x 1, Cl 8,

03.15(01) SPIKE TOOTH BARS FOR UNIVERSAL DRUM

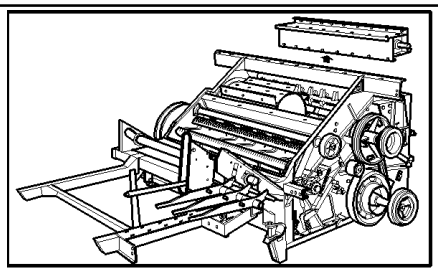

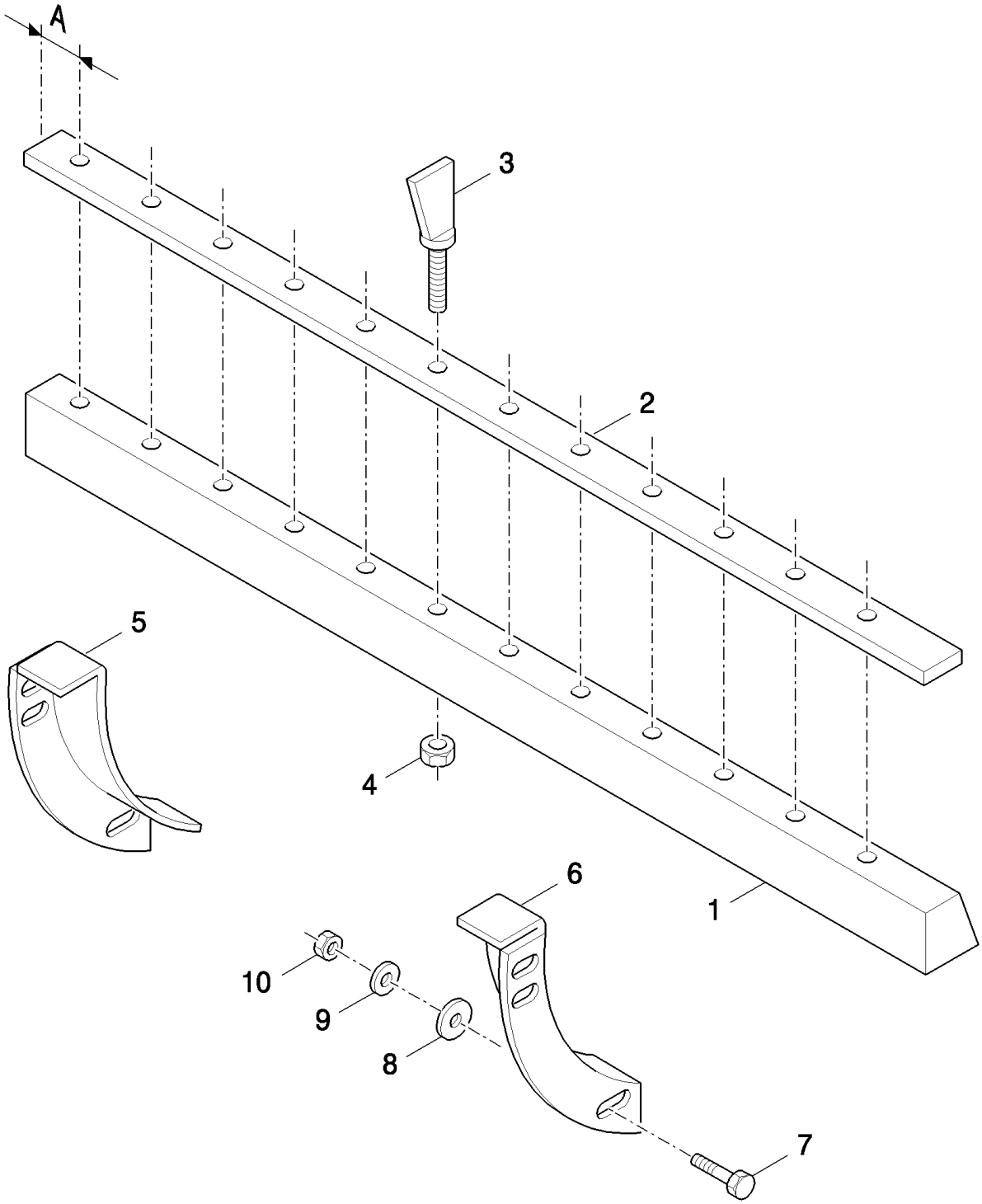

TX68 COMBINE - BASE UNIT

03.15(01) SPIKE TOOTH BARS FOR UNIVERSAL DRUM

ссылка	Номер детали	Кол-во	Описание
1	456177	4	PLATE, FIXING, -56,A=35MM, FOR TX66-68 ONLY
1	456178	4	PLATE, FIXING, -56,A=63MM, FOR TX66-68 ONLY
1	436535	4	LATH, -56,A=31MM, FOR TX62-63-64-65 ONLY
1	436537	4	LATH, -56,A=59MM, FOR TX62-63-64-65 ONLY
1	9502479	4	PLATE, FIXING, -84,A=42MM, FOR TX66-68 ONLY
1	9502480	4	PLATE, FIXING, -84,A=84MM, FOR TX66-68 ONLY
1	922574	4	LATH, -84,A=38MM, FOR TX62-63-64-65 ONLY
1	922575	4	LATH, -84,A=80MM, FOR TX62-63-64-65 ONLY
2	456179	8	PLATE, FIXING, -56,A=35MM, FOR TX66-68 ONLY
2	436536	4	PLATE, FIXING, -56,A=31MM, FOR TX62-63-64-65 ONLY
2	436538	4	PLATE, FIXING, -56,A=59MM, FOR TX62-63-64-65 ONLY
2	9502478	8	LATH, -84,A=42MM, FOR TX66-68 ONLY
2	922579	8	LATH, -84,A=38MM, FOR TX62-63-64-65 ONLY
3	396935	AR	TOOTH, RICE,
4	86000441	AR	NUT, M16 x 2, Cl 8,
5	354592	1	SHIELD, LH
6	354593	1	SHIELD, RH
7	120100	8	BOLT, Hex, M6 x 20, 8.8,
8	140045	4	WASHER, SPRING, Belleville, M10,
9	322357	4	WASHER, SPRING, Belleville, M6,
10	15896221	4	NUT, M6, Cl 10,

03.16(01) UNIVERSAL DRUM, SHAFT AND BEARINGS

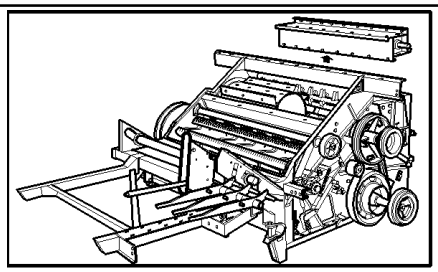

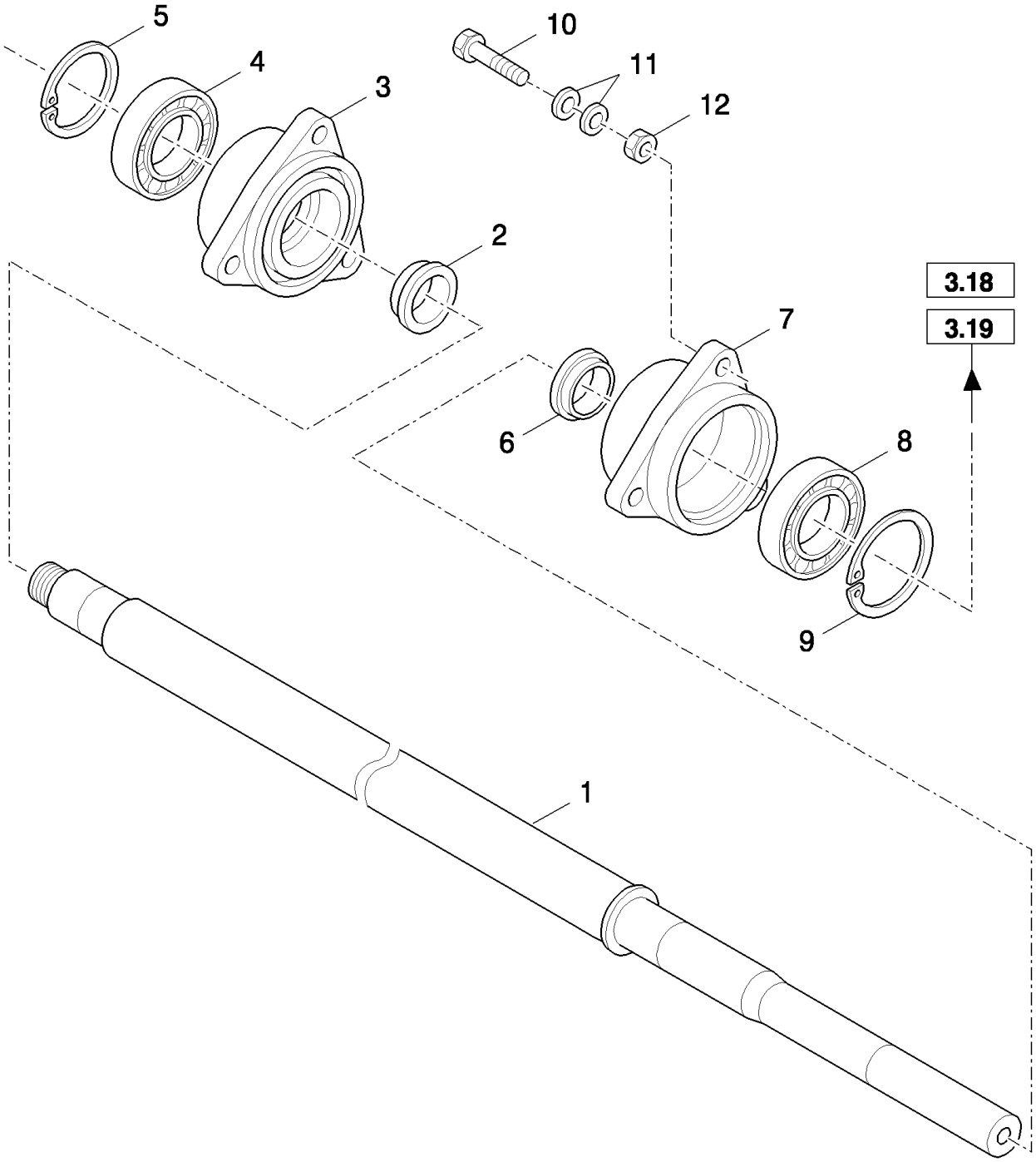

TX68 COMBINE - BASE UNIT

03.16(01) UNIVERSAL DRUM, SHAFT AND BEARINGS

ссылка	Номер детали	Кол-во	Описание
1	9850883	1	SHAFT, , FOR TX66-68 ONLY
1	9850882	1	SHAFT, , FOR TX62-63-64-65 ONLY, -C1229
1	84807528	1	SHAFT, , FOR TX62-63-64-65 ONLY, D1230-
2	388669	2	RING, LH
3	439605	1	HOUSING, BEARING, LH
4	388069	1	BEARING ASSY, LH
5	301652	1	RING, SNAP, M110, Int, LH
6	750270	1	RING, RH
7	750291	1	HOUSING, BEARING, RH
8	412274	1	BEARING ASSY, RH
9	412270	1	RING, SNAP, M120, Int, RH
10	43140	6	BOLT, Hex, M10 x 30, 8.8, Full Thd,
11	140045	12	WASHER, SPRING, Belleville, M10,
12	100016	6	NUT, M10, Cl 8,

03.17(01) DRUM VARI-DRIVE CONTROL

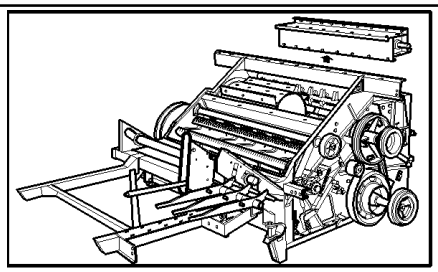

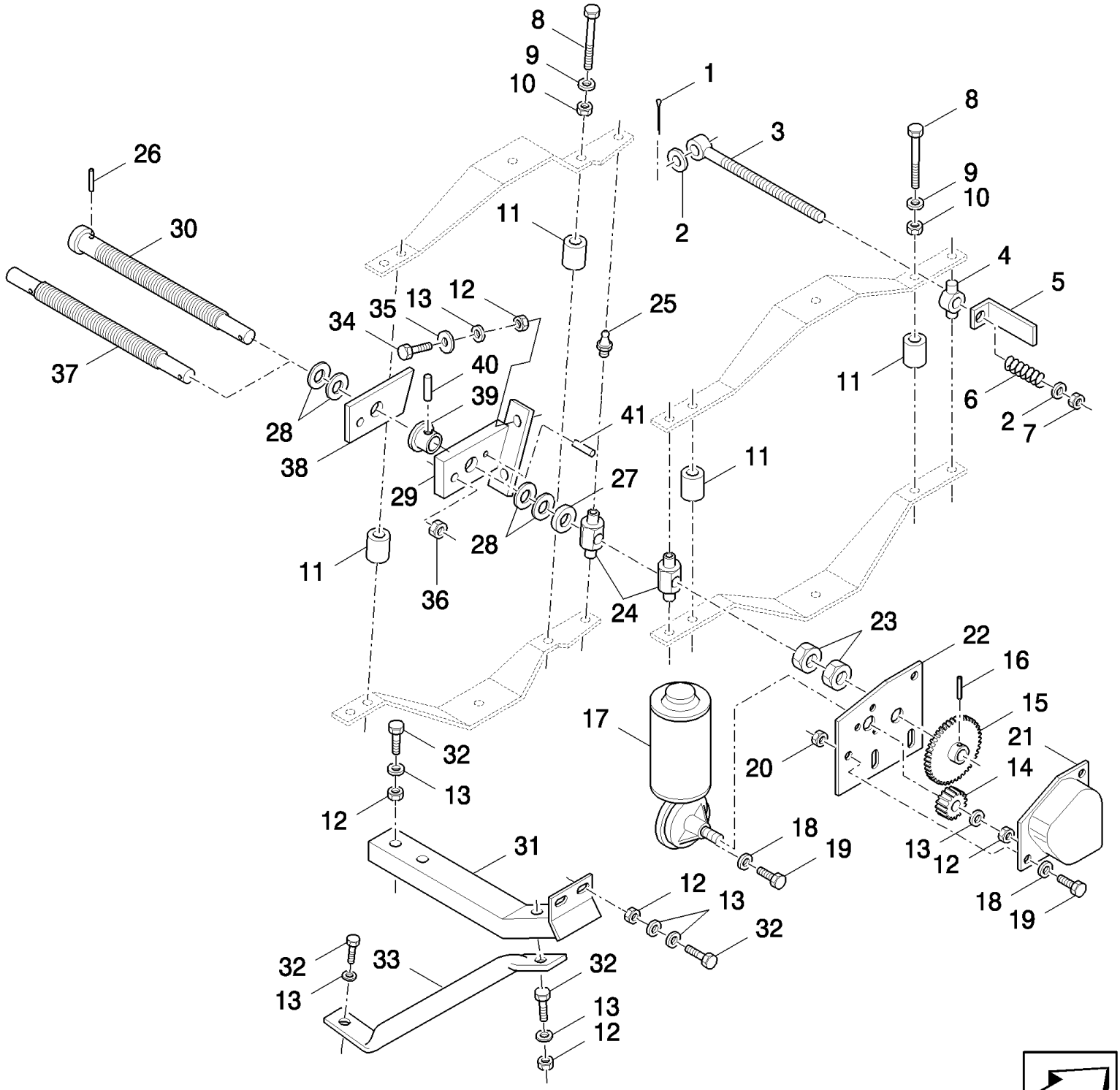

TX68 COMBINE - BASE UNIT

03.17(01) DRUM VARI-DRIVE CONTROL

ссылка	Номер детали	Кол-во	Описание
1	130007	1	PIN, SPLIT (COTTER), M4 x 25,
2	378246	2	WASHER, 16MM
3	412435	1	ROD, CONNECTING,
4	362183	1	NUT,
5	445957	1	INDICATOR,
6	445013	1	SPRING,
7	412066	1	NUT, LOCK, M16 x 2, Cl 8, M16
8	43158	4	BOLT, Hex, M12 x 80, 8.8,
9	140046	4	WASHER, Belleville, M12,
10	337475	4	NUT, M12, Cl 10,
11	200098	4	BUSHING,
12	9706690	4	NUT, M8, Cl 8,
13	322358	5	WASHER, SPRING, Belleville, M8,
14	444998	1	GEAR,
15	922846	1	SPROCKET, DRIVEN,
16	130045	1	PIN, M5 x 26, Slotted,
17	9507880	1	MOTOR, ELECTRIC,
18	322357	5	WASHER, SPRING, Belleville, M6,
19	80120099	5	BOLT, Hex, M6 x 16, 8.8,
20	15896221	2	NUT, M6, Cl 10,
21	449292	1	COVER,
22	750600	1	PLATE,
23	9510367	2	NUT, M24 x 5, Cl 8,
24	394201	2	NUT,
25	321204	2	NIPPLE, LUBE, M6 x 1, 16mm lg,
26	300869	1	PIN, LOCK, M6 x 40, Slotted, , -C1090
27	442106	1	RING, , -C1090
28	356526	AR	WASHER,
29	442109	1	SUPPORT, , -C1090
29	84062020	1	SUPPORT, , D1091-
30	922845	1	SCREW, ADJUSTMENT, , -C1090
31	747834	1	SUPPORT,
32	120104	3	SCREW, Hex, M8 x 20, 8.8,
33	84000000	1	SUPPORT, , -C7520
33	84036882	1	SUPPORT, , D7520-
34	43128	2	BOLT, Hex, M8 x 30, 8.8,
35	378243	2	WASHER, M8,
36	100037	1	NUT, M10 x 1.5, Cl 8,
37	84062022	1	SCREW, ADJUSTMENT, , D1091-
38	84062021	1	PLATE, , D1091-
39	84062019	1	BUSHING, , D1091-
40	80379543	1	PIN, , D1091-
41	9511934	1	PIN, LOCK, M5 x 20, Slotted, , D1091-

03.17A(01) DRUM VARI-DRIVE WITH "POSI-TORQUE"

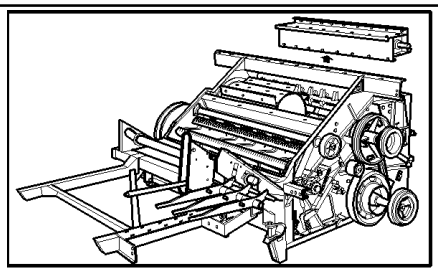

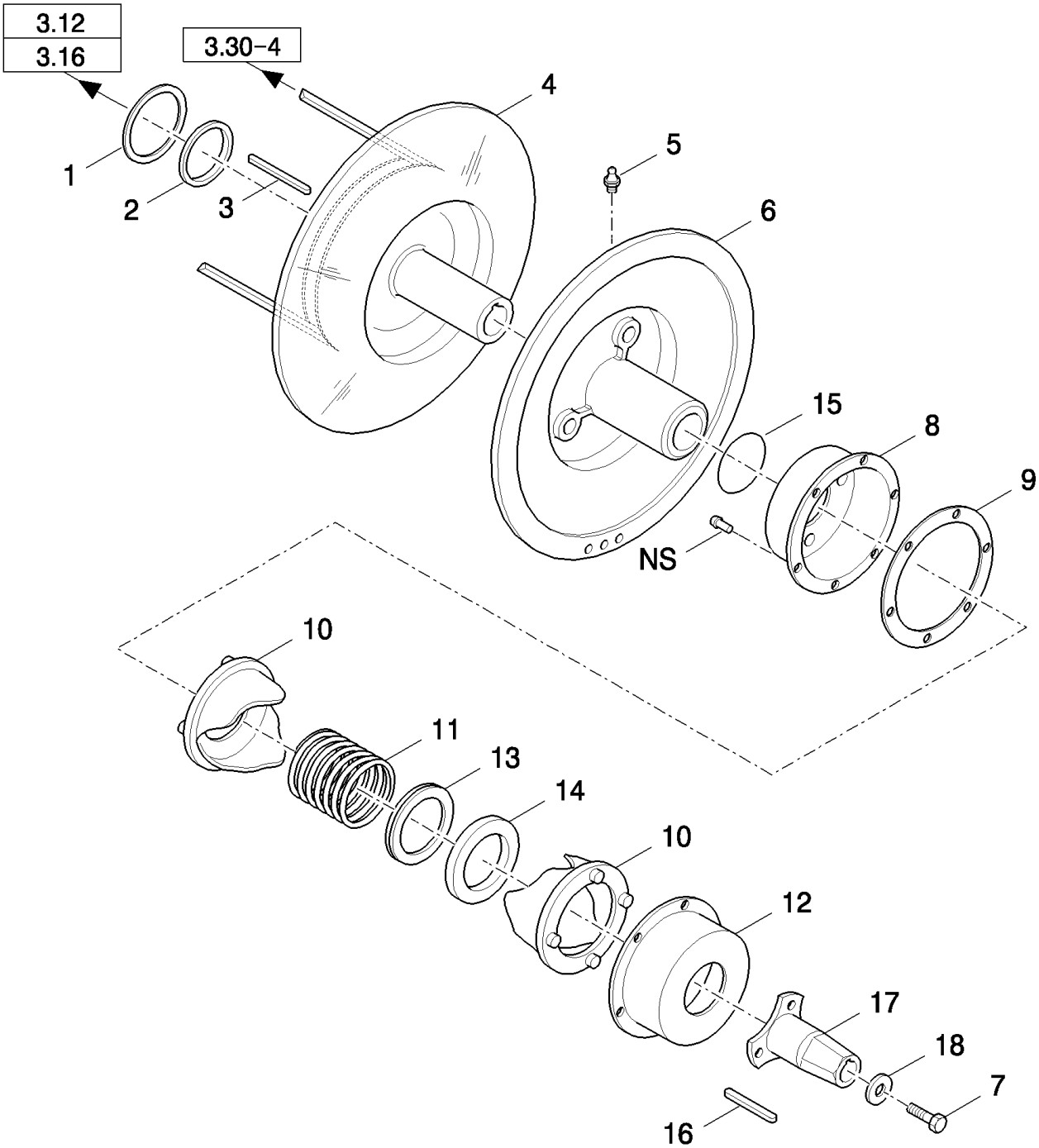

TX68 COMBINE - BASE UNIT

03.17A(01) DRUM VARI-DRIVE WITH "POSI-TORQUE"

ссылка	Номер детали	Кол-во	Описание
1	84022605	3	SPACER,
2	750267	1	RING,
3	444889	1	KEY,
4	457495	1	DISC,
5	321204	2	NIPPLE, LUBE, M6 x 1, 16mm lg,
6	916004	1	DISC,
7	120248	1	BOLT, Hex, M16 x 100, 8.8, Full Thd,
8	441925	1	HUB,
9	441924	1	SEALRING,
10	84022216	2	CAM, , -C1165
10	84429188	2	CAM, , D1166-
11	84031805	1	SPRING, , -C1165
11	84429250	1	SPRING, , D1166-
12	457533	1	HUB,
13	435921	1	BEARING ASSY,
14	443808	1	RING,
15	457410	1	O-RING, -336, 70 Duro, 2.85" ID x .210" Thk,
16	434640	1	KEY,
17	457493	1	HUB,
18	440997	1	WASHER,

03.18(01) DRUM VARI-DRIVE WITHOUT REDUCER

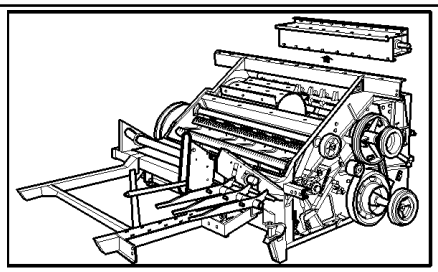

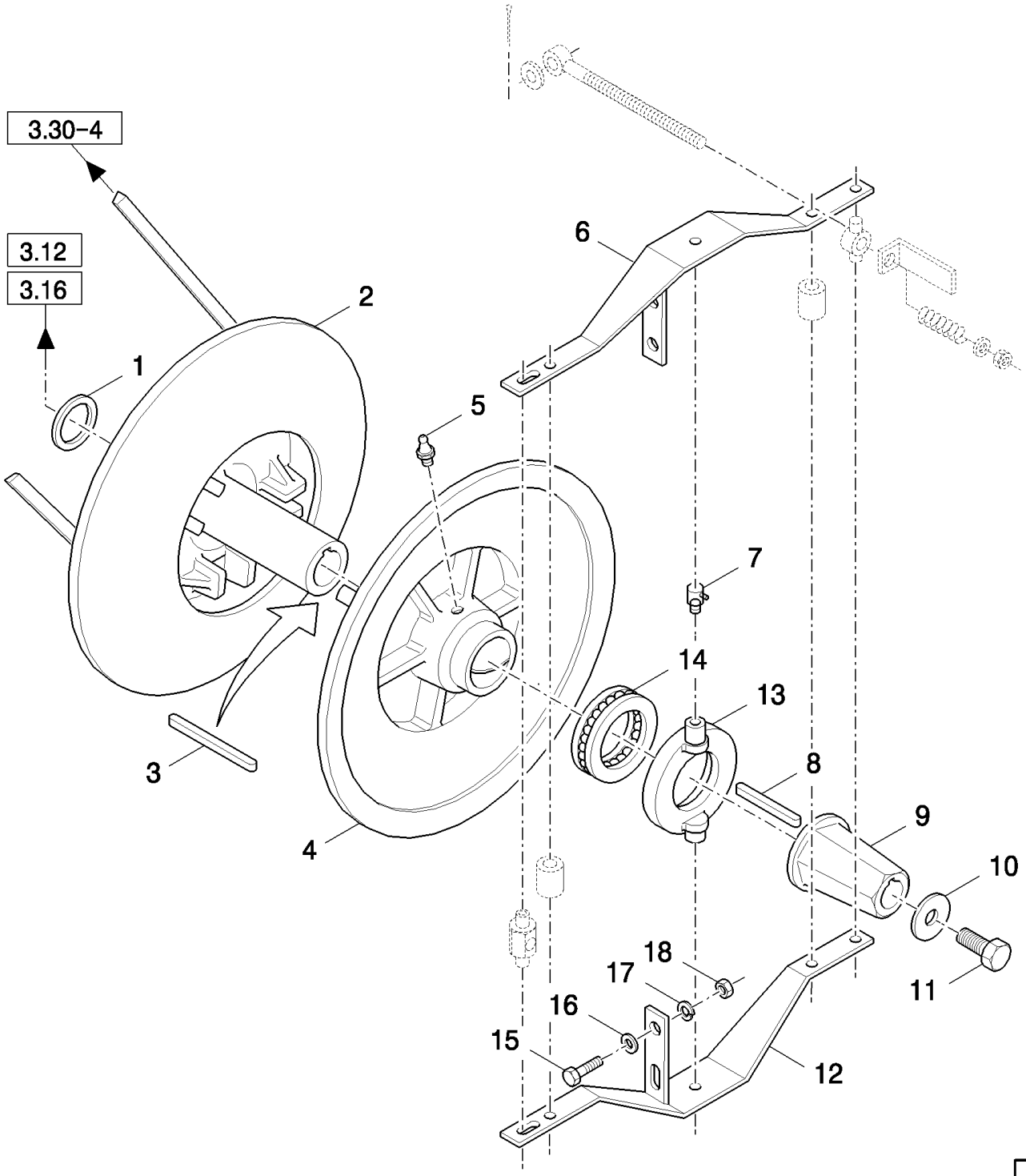

TX68 COMBINE - BASE UNIT

03.18(01) DRUM VARI-DRIVE WITHOUT REDUCER

ссылка	Номер детали	Кол-во	Описание
1	750267	1	RING,
2	750375	1	DISC,
3	444889	1	KEY,
4	439597	1	DISC,
5	321204	1	NIPPLE, LUBE, M6 x 1, 16mm lg,
6	440963	1	ARM,
7	332040	1	NIPPLE, LUBE, 90є, 1/8" NPT x .84" lg,
8	434640	1	KEY,
9	439599	1	HUB,
10	440997	1	WASHER,
11	120090	1	SCREW, Hex, M16 x 50, 8.8,
12	440965	1	ARM,
13	389005	1	HOUSING,
14	388068	1	BEARING ASSY,
15	43140	2	BOLT, Hex, M10 x 30, 8.8, Full Thd,
16	378244	2	WASHER, M10,
17	140045	2	WASHER, SPRING, Belleville, M10,
18	100016	2	NUT, M10, Cl 8,

03.19(01) DRUM VARI-DRIVE WITH REDUCER

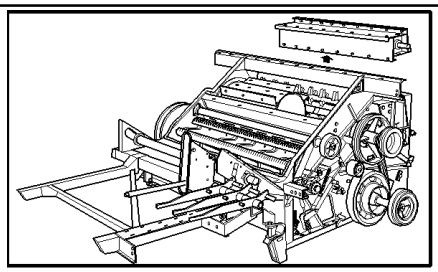

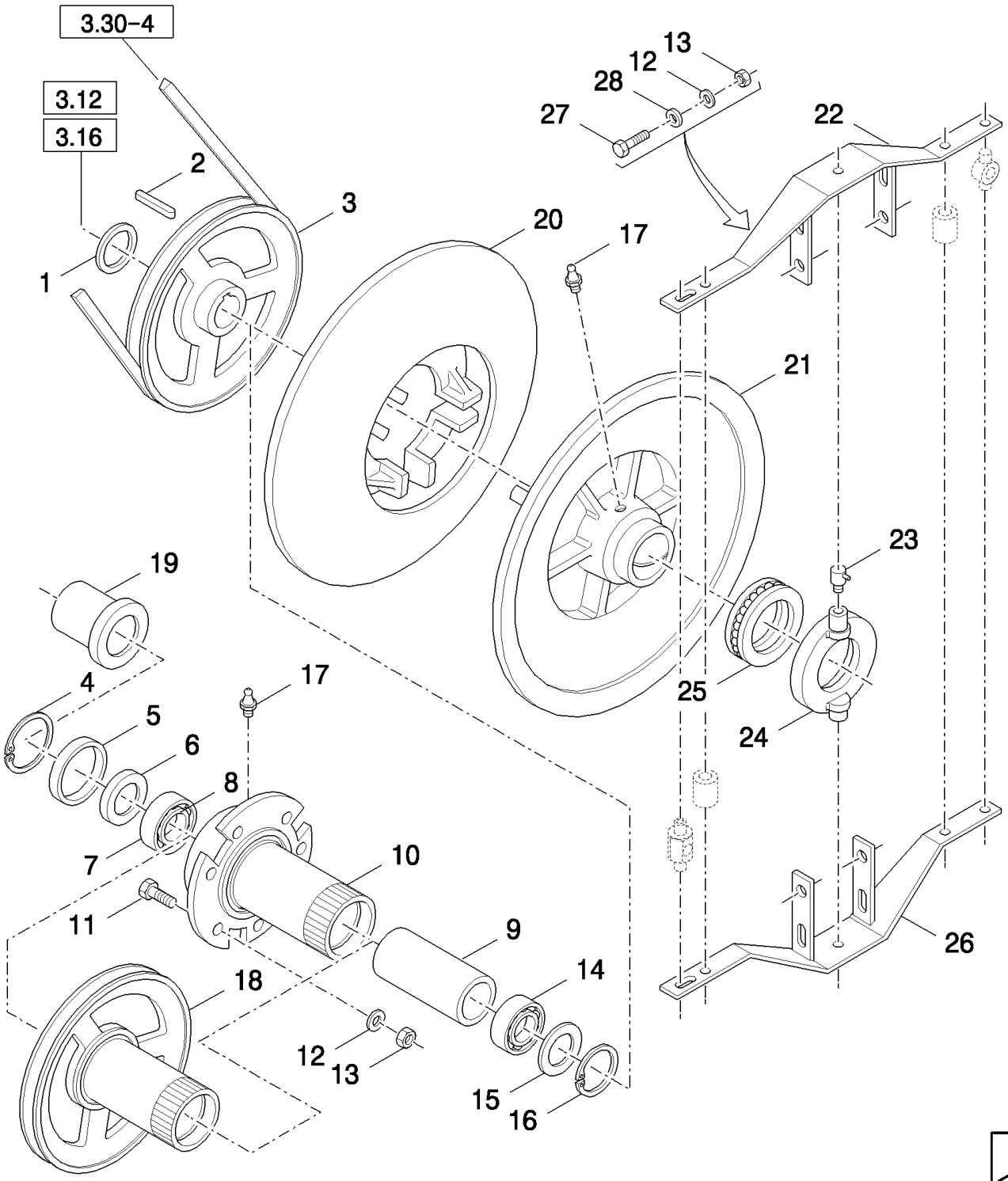

TX68 COMBINE - BASE UNIT

03.19(01) DRUM VARI-DRIVE WITH REDUCER

ссылка	Номер детали	Кол-во	Описание
1	750267	1	RING, , -C5660
2	444860	1	KEY, , -C5660
3	750404	1	PULLEY, , -C5660
4	370026	1	RING, SNAP, Int, M100 x 3,
5	84015021	1	ELEMENT, SEALING,
6	450047	1	BUSHING, , -C5660
7	199955	1	BEARING, CUP,
8	199954	1	BEARING, ROLLER,
9	444843	1	BUSHING,
10	84014772	1	HUB, , -C5660
11	120112	6	BOLT, Hex, M10 x 40, 8.8, Full Thd,
12	140045	10	WASHER, SPRING, Belleville, M10,
13	100016	10	NUT, M10, Cl 8,
14	412436	1	BEARING ASSY,
15	84014991	1	RING,
16	80300633	1	RING, SNAP,
17	321204	1	NIPPLE, LUBE, M6 x 1, 16mm lg,
18	84022548	1	HUB, , D5660-
19	84022681	1	BUSHING, , D5660-
20	444352	1	DISC,
21	444353	1	DISC,
22	444837	1	LEVER,
23	332040	1	NIPPLE, LUBE, 90є, 1/8" NPT x .84" lg,
24	444299	1	HOUSING, BEARING, , -C1241
24	84814958	1	HOUSING, BEARING, , D1242-
25	443915	1	BEARING ASSY,
26	444839	1	LEVER,
27	43140	4	BOLT, Hex, M10 x 30, 8.8, Full Thd,
28	378244	4	WASHER, M10,

03.20(01) REDUCTOR, SUPPORTS

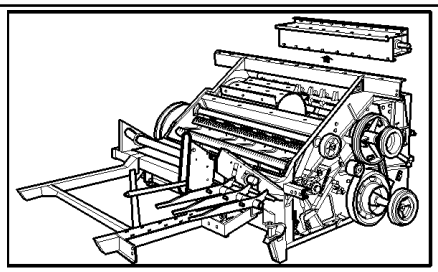

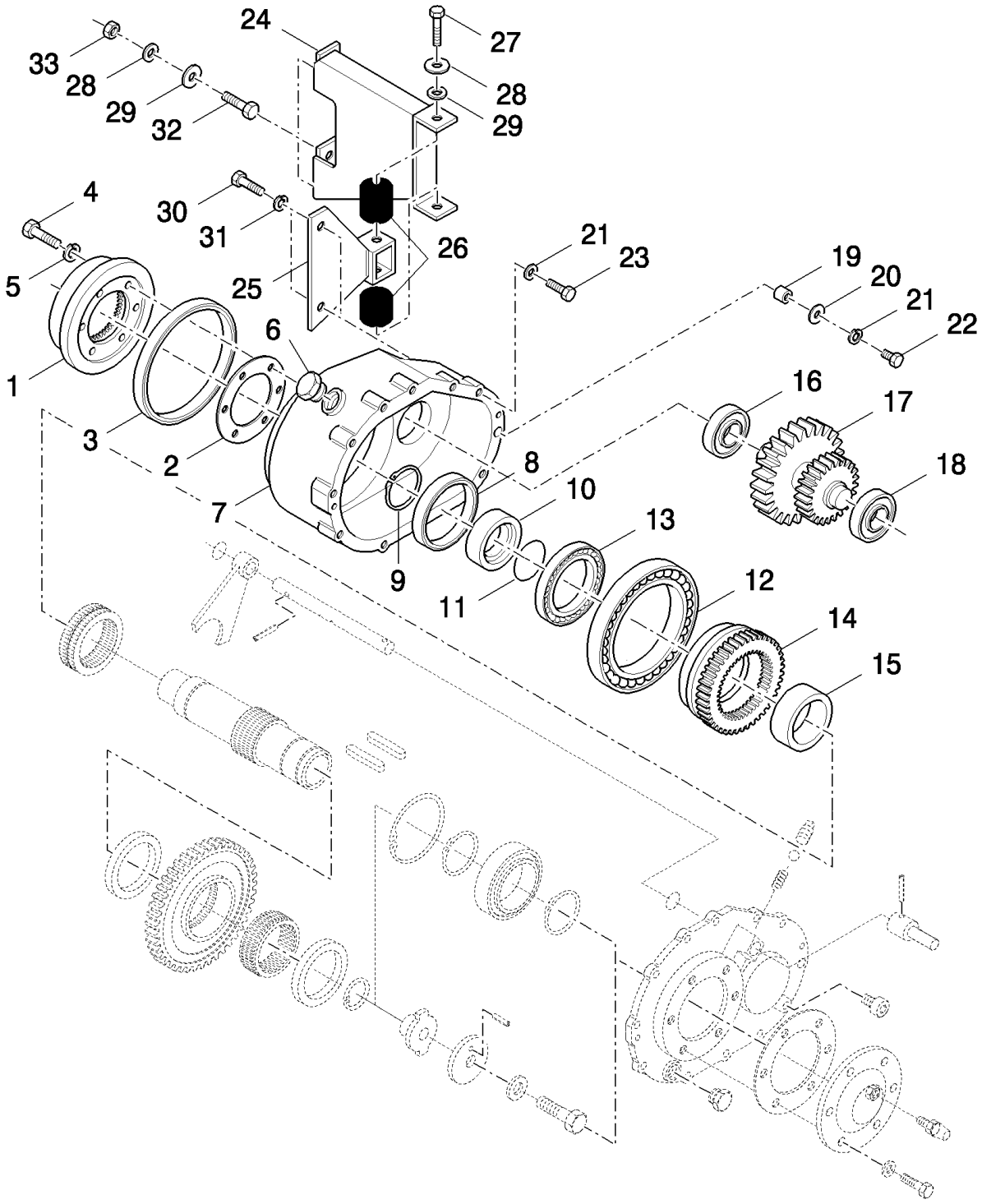

TX68 COMBINE - BASE UNIT

03.20(01) REDUCTOR, SUPPORTS

ссылка	Номер детали	Кол-во	Описание
1	84014965	1	RING, COUPLING,
2	450048	1	SEAL,
3	450139	1	SEAL,
4	120069	6	SCREW, Hex, M10 x 50, 8.8,
5	140045	6	WASHER, SPRING, Belleville, M10,
6	417006	1	PLUG,
7	435912	1	HOUSING,
8	375400	1	ELEMENT, SEALING,
9	300636	1	CIRCLIP, M70, Ext,
10	436418	1	RING,
11	436405	1	O-RING,
12	436348	1	BEARING, BALL,
13	210038	1	BEARING ASSY,
14	436128	1	GEAR,
15	436469	1	BUSHING,
16	210064	1	BEARING ASSY,
17	443785	1	GEAR,
18	46805	1	BEARING ASSY,
19	436436	2	BUSHING,
20	378243	2	WASHER, M8,
21	322358	12	WASHER, SPRING, Belleville, M8,
22	120106	2	BOLT, Hex, M8 x 40, 8.8, Full Thd,
23	43128	10	BOLT, Hex, M8 x 30, 8.8,
24	455454	1	SUPPORT,
25	444844	1	BRACKET,
26	444223	2	INSULATOR BLOCK, 1/8"-27 Fem, , -C1241
26	84814957	2	INSULATOR BLOCK, , D1242-
27	300383	4	BOLT, Hex, M10 x 16, 8.8, Full Thd,
28	140045	7	WASHER, SPRING, Belleville, M10,
29	378244	7	WASHER, M10,
30	300388	2	SCREW, Hex, M12 x 25, 8.8,
31	140046	2	WASHER, Belleville, M12,
32	11106231	3	BOLT, Hex, M10 x 25, 10.9, Full Thd,
33	100016	3	NUT, M10, Cl 8,

03.21(01) REDUCTOR

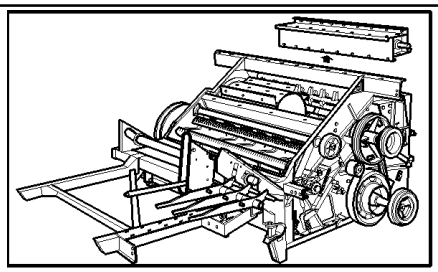

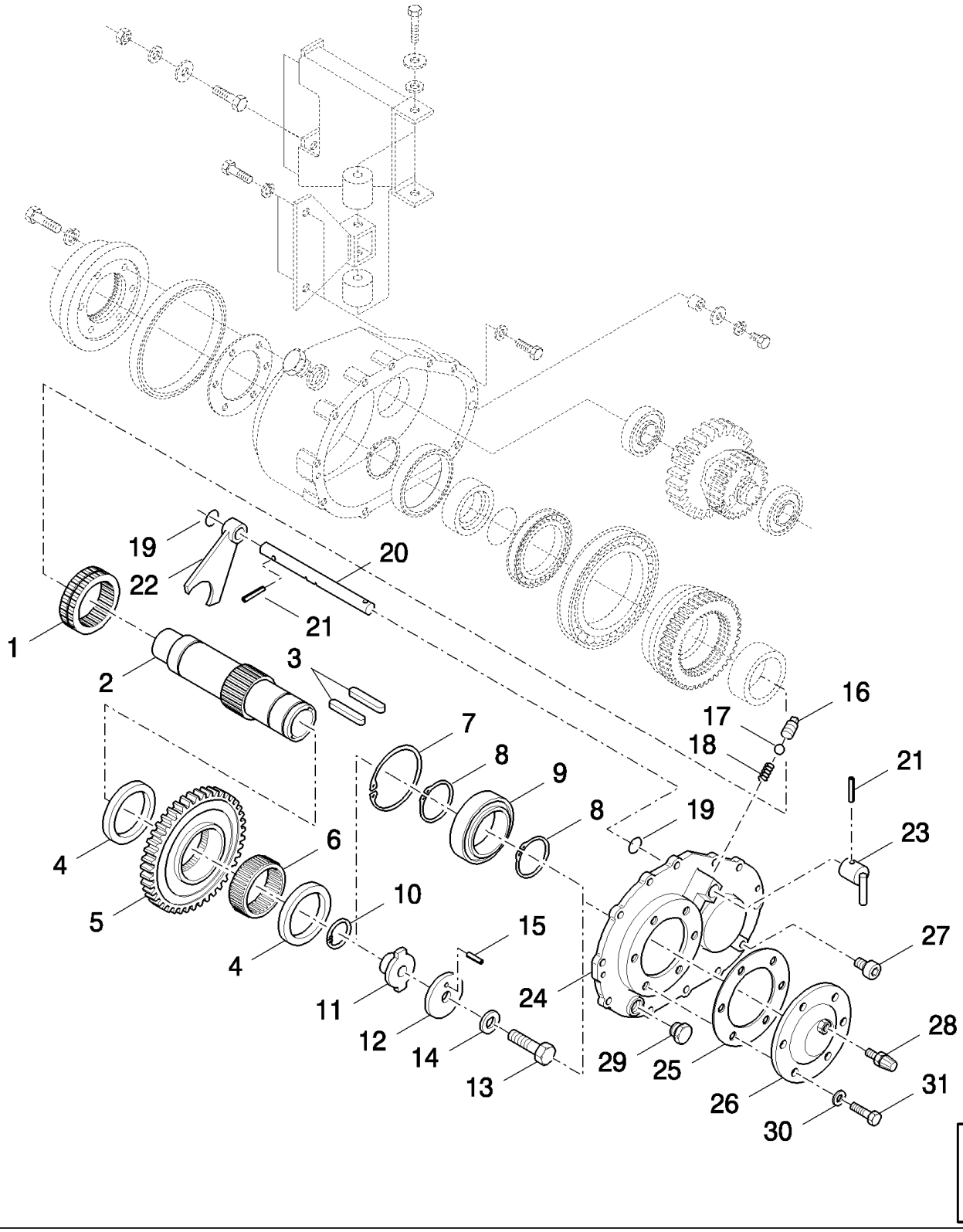

TX68 COMBINE - BASE UNIT

03.21(01) REDUCTOR

ссылка	Номер детали	Кол-во	Описание
1	441095	1	GEAR,
2	747542	1	SPINDLE,
3	434640	2	KEY,
4	412330	2	RING,
5	436155	1	GEAR,
6	436238	1	BEARING ASSY,
7	301652	1	RING, SNAP, M110, Int,
8	300636	2	CIRCLIP, M70, Ext,
9	210038	1	BEARING ASSY,
10	300647	1	RING, SNAP, M47, Int,
11	446743	1	RING,
12	457015	1	WASHER, LOCK,
13	350616	1	SCREW, Hex, M16 x 90, 8.8,
14	457016	1	PLATE, LOCKING,
15	9511934	1	PIN, LOCK, M5 x 20, Slotted,
16	80781	1	PLUG, Sq Hd, 3/8"-18,
17	210006	1	BALL,
18	42019	1	SPRING,
19	446753	2	O-RING,
20	436428	1	SHAFT,
21	130045	2	PIN, M5 x 26, Slotted,
22	435957	1	FORK,
23	436427	1	HANDLE,
24	435758	1	COVER,
25	450048	1	SEAL, , -C1215
25	84438564	1	GASKET, , D1216-
26	437591	1	COVER,
27	449812	1	PLUG,
28	350613	1	BREATHER,
29	417006	1	PLUG,
30	80120099	6	BOLT, Hex, M6 x 16, 8.8,
31	322357	6	WASHER, SPRING, Belleville, M6,

03.22(01) DRUM VARI-DRIVE, COMMON PARTS

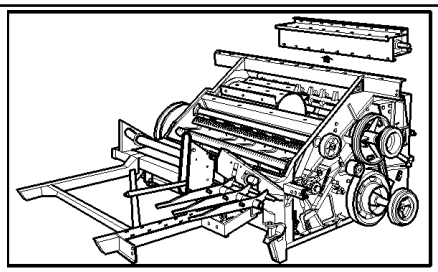

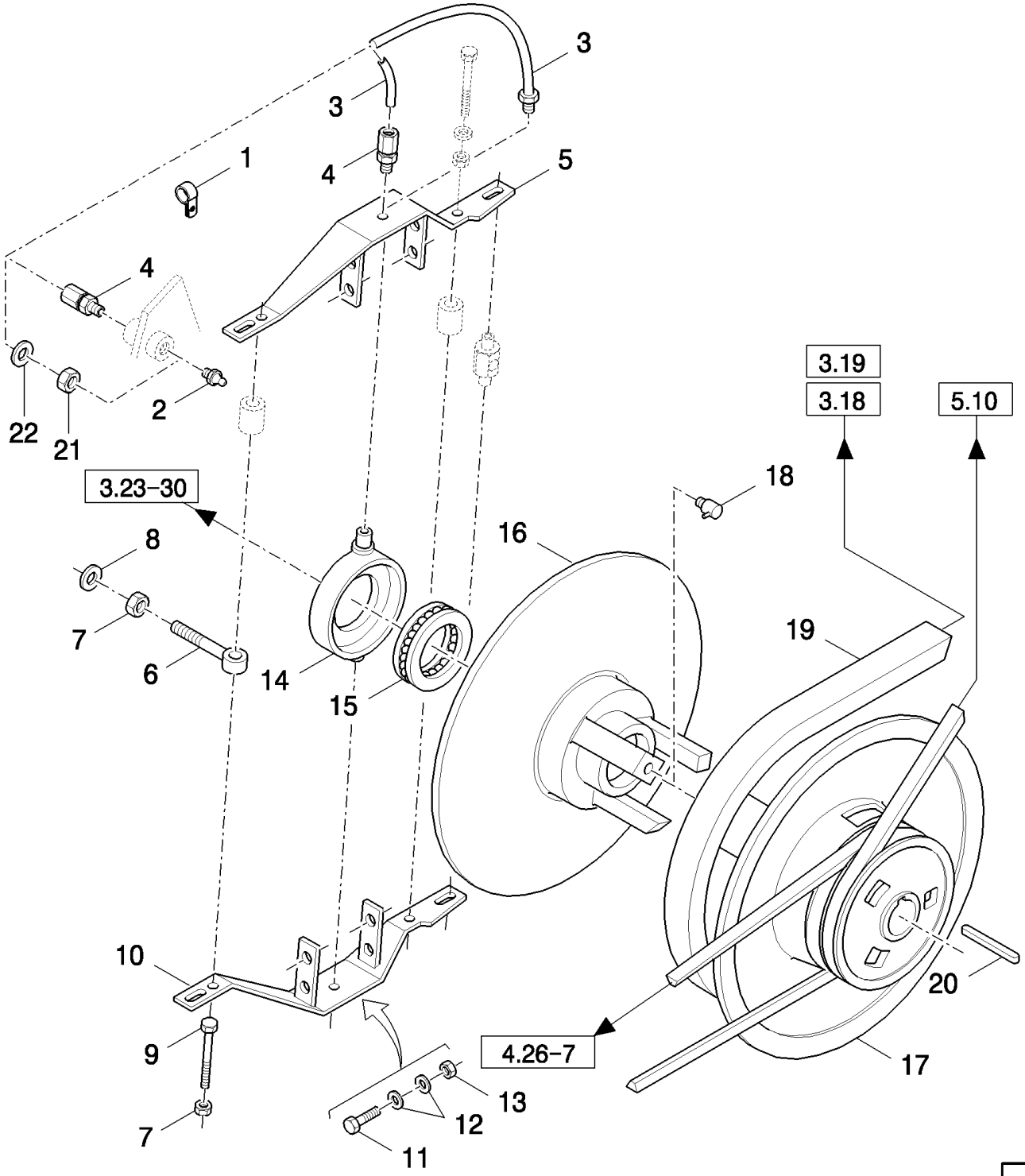

TX68 COMBINE - BASE UNIT

03.22(01) DRUM VARI-DRIVE, COMMON PARTS

ссылка	Номер детали	Кол-во	Описание
1	353072	2	CLAMP,
2	150021	1	NIPPLE, LUBE, , -C1032
2	321204	1	NIPPLE, LUBE, M6 x 1, 16mm lg, , D1033-
3	84005320	1	HOSE, FLEXIBLE, , -C1032
3	84043135	1	HOSE, HYDRAULIC, , D1033-
4	353145	2	CONNECTOR, HYD., , -C1032
5	913220	1	LEVER,
6	354131	1	BOLT,
7	412066	2	NUT, LOCK, M16 x 2, Cl 8, M16
8	378246	1	WASHER, 16MM
9	374889	1	BOLT, Hex, M16 x 100, 8.8,
10	913219	1	LEVER,
11	43140	4	BOLT, Hex, M10 x 30, 8.8, Full Thd,
12	140045	6	WASHER, SPRING, Belleville, M10,
13	100016	4	NUT, M10, Cl 8,
14	389005	1	HOUSING,
15	388068	1	BEARING ASSY,
16	439596	1	DISC, , WITH VARIABLE BEATER DRIVE ONLY
16	84043546	1	DISC, , WITH CONSTANT BEATER DRIVE ONLY
17	754385	1	DISC, , WITH VARIABLE BEATER DRIVE ONLY
17	84038052	1	DISC, , WITH CONSTANT BEATER DRIVE ONLY
18	323713	1	NIPPLE, LUBE,
19	9832601	1	BELT, TRANSMISSION, , -C1123
19	84817640	1	BELT, TRANSMISSION, , D1124-
20	170047	1	KEY,
21	84022934	1	NUT, M10 x 1, Cl 8, , D1033-
22	140045	1	WASHER, SPRING, Belleville, M10, , D1033-

03.23(01) COUNTERSHAFT

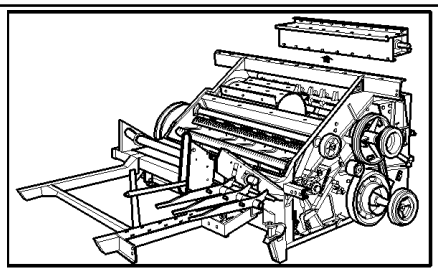

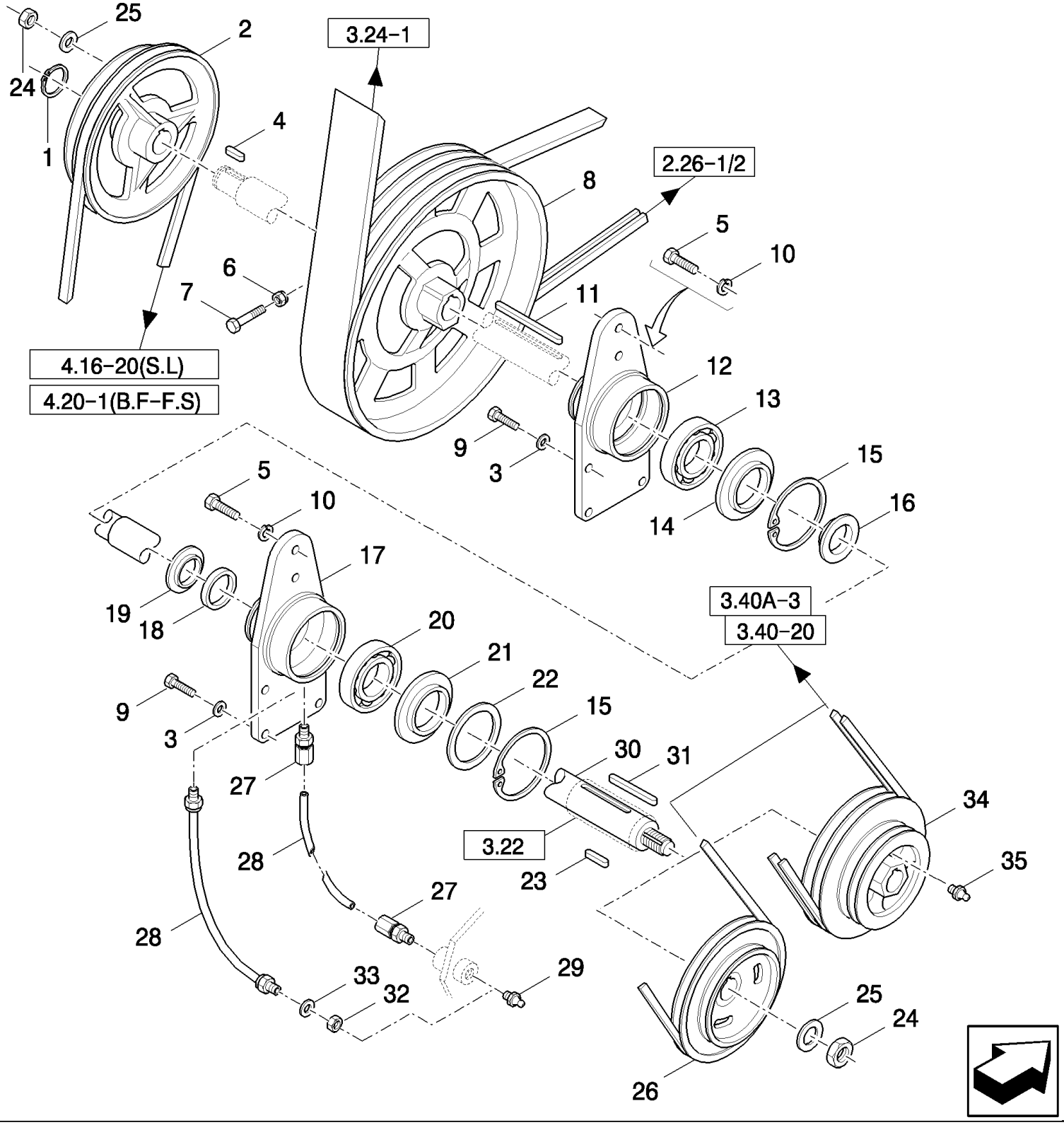

TX68 COMBINE - BASE UNIT

03.23(01) COUNTERSHAFT

ссылка	Номер детали	Кол-во	Описание
1	370006	1	RING, SNAP, , -C1047
2	9811686	1	PULLEY,
3	140045	6	WASHER, SPRING, Belleville, M10,
4	170056	1	KEY,
5	86629541	2	BOLT, Hex, M12 x 40, 8.8, Full Thd,
6	100037	1	NUT, M10 x 1.5, Cl 8, , -C1127
6	100038	1	NUT, M12 x 1.75, Cl 8, , D1128-
7	120073	1	BOLT, Hex, M10 x 80, 8.8, , -C1047
7	84056630	1	SCREW, Hex Soc Hd, M10 x 80, 8.8, M10x80, -C0048
7	86508581	1	BOLT, Hex, M12 x 90, 8.8, , D1128-
8	84032335	1	PULLEY, , -C1127
8	84078574	1	PULLEY, , -C0063
8	84429885	1	PULLEY, , D1194-
9	43140	6	BOLT, Hex, M10 x 30, 8.8, Full Thd,
10	140046	2	WASHER, Belleville, M12,
11	444889	1	KEY, , -C1193
11	84429852	1	KEY, , D1194-
12	916955	1	FLANGE, , -C1193
12	913350	1	FLANGE, , D1194-
13	388069	1	BEARING ASSY,
14	388937	1	RING,
15	301652	2	RING, SNAP, M110, Int,
16	921216	1	RING, , -C5510
16	84032287	1	RING, , D5510-
17	84004990	1	FLANGE,
18	921208	1	ELEMENT, SEALING,
19	84004992	1	RING,
20	84005316	1	BEARING, ROLLER,
21	439861	1	SEALRING,
22	442413	1	SPACER,
23	170066	1	KEY,
24	300852	2	NUT, M30 x 1.5, Cl 8,
25	411961	2	WASHER,
26	754455	1	PULLEY, , FOR VARIABLE BEATER DRIVE ONLY
27	353145	2	CONNECTOR, HYD., , -C1032
28	84005321	1	TUBE, , -C1032
28	84043136	1	HOSE, HYDRAULIC, , D1033-
29	150021	1	NIPPLE, LUBE, , -C1032
29	321204	1	NIPPLE, LUBE, M6 x 1, 16mm lg, , D1033-
30	9508211	1	SHAFT, , FOR TX66-67-68 ONLY, -C1047
30	84056628	1	SHAFT, , FOR TX66-67-68 ONLY, NOT FOR TX68PLUS, -C0062
30	84429889	1	SHAFT, , NOT FOR TX68PLUS, FOR TX66-67-68 ONLY, D1194-
30	439812	1	SHAFT, , FOR TX62-63-64-65 ONLY, -C1047
30	84056629	1	SHAFT, , FOR TX62-63-64-65 ONLY, -C0062

TX68 COMBINE - BASE UNIT

03.23(01) COUNTERSHAFT

ссылка	Номер детали	Кол-во	Описание
30	84429887	1	SHAFT, , FOR TX62-63-64-65 ONLY, D1194-
30	84022581	1	SHAFT, , FOR TX68PLUS ONLY, -C1193
30	84429888	1	SHAFT, , FOR TX68PLUS ONLY, D1194-
31	170047	1	KEY,
32	84022934	1	NUT, M10 x 1, Cl 8, , D1033-
33	140045	1	WASHER, SPRING, Belleville, M10, , D1033-
34	84037763	1	PULLEY, , FOR TX68PLUS ONLY, FOR CONSTANT BEATER DRIVE ONLY
35	321204	1	NIPPLE, LUBE, M6 x 1, 16mm lg, , FOR CONSTANT BEATER DRIVE ONLY, FOR TX68PLUS ONLY

03.24(01) THRESHING, DRIVE, BELT AND GUARD

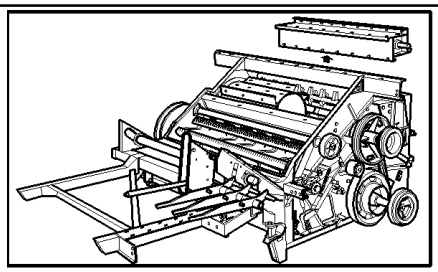

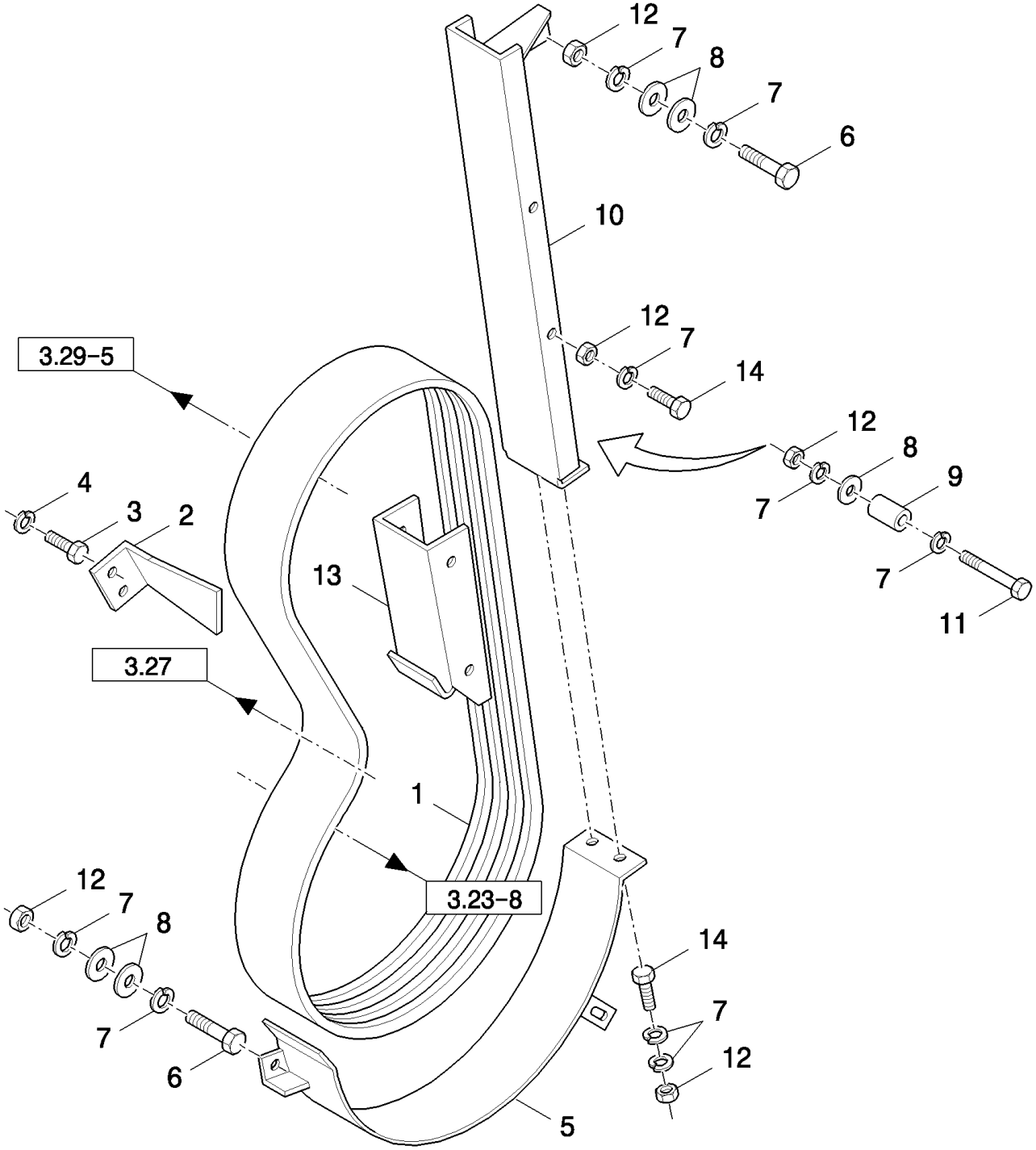

TX68 COMBINE - BASE UNIT

03.24(01) THRESHING, DRIVE, BELT AND GUARD

ссылка	Номер детали	Кол-во	Описание
1	84817623	1	BELT, TRANSMISSION,
2	441369	1	BRACKET,
3	43138	2	SCREW, Hex, M10 x 20, 8.8, Full Thd,
4	140045	2	WASHER, SPRING, Belleville, M10,
5	9500050	1	GUIDE,
6	120100	2	BOLT, Hex, M6 x 20, 8.8,
7	322357	18	WASHER, SPRING, Belleville, M6,
8	140040	AR	WASHER, M6 x 22 x 2,
9	441370	1	BUSHING,
10	435146	1	GUIDE,
11	120056	1	SCREW, Hex, M6 x 50, 8.8,
12	15896221	11	NUT, M6, Cl 10,
13	435144	1	GUIDE,
14	80120099	6	BOLT, Hex, M6 x 16, 8.8,

03.25(01) THRESHING, DRIVE IDLER

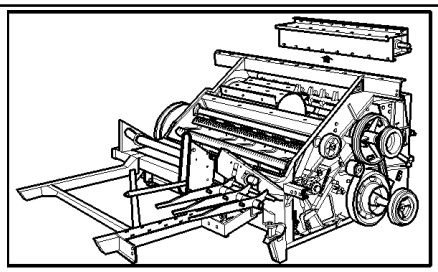

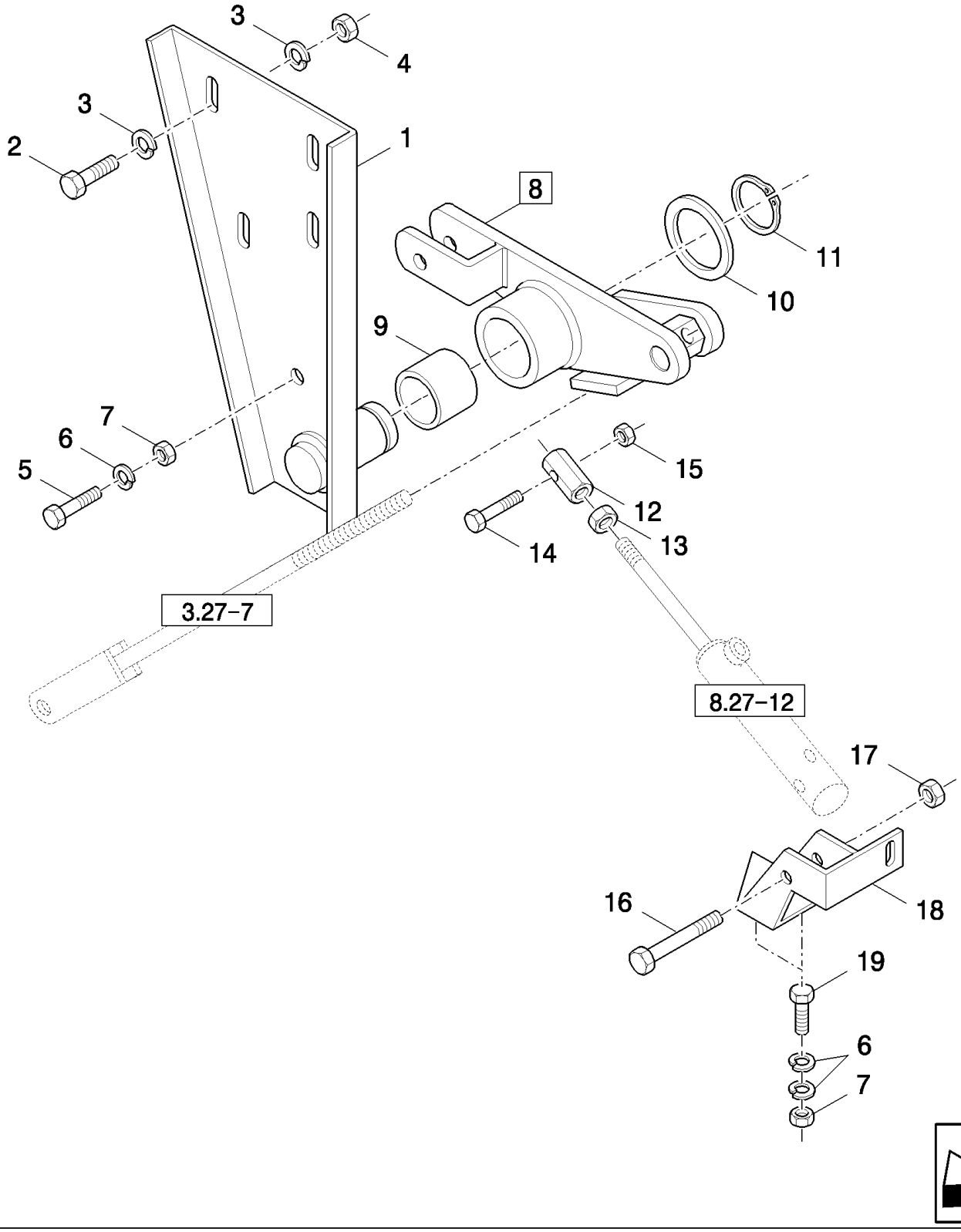

FOR TX63 WITH REMOTE CONTROL

TX68 COMBINE - BASE UNIT

03.25(01) THRESHING, DRIVE IDLER

ссылка	Номер детали	Кол-во	Описание
1	9832404	1	SUPPORT,
2	9706687	4	SCREW, Hex, M12 x 30, 8.8,
3	140046	8	WASHER, Belleville, M12,
4	337475	4	NUT, M12, Cl 10,
5	43140	1	BOLT, Hex, M10 x 30, 8.8, Full Thd,
6	140045	7	WASHER, SPRING, Belleville, M10,
7	100016	4	NUT, M10, Cl 8,
8	9832389	1	SUPPORT, (9)
9	419621	1	BUSHING,
10	442293	1	WASHER,
11	11068376	1	RING, SNAP, M35, Ext x 1.5 Thk,
12	9819145	1	COUPLING,
13	364164	1	NUT, Thin, M16 x 1.5, Cl 04, M16
14	43130	1	BOLT, Hex, M8 x 50, 8.8,
15	86629542	1	NUT, LOCK, M8 x 1.25, Cl 8,
16	9706693	1	BOLT, Hex, M12 x 60, 8.8,
17	100038	1	NUT, M12 x 1.75, Cl 8,
18	9832396	1	SUPPORT,
19	43138	2	SCREW, Hex, M10 x 20, 8.8, Full Thd,

FOR TX63 WITH REMOTE CONTROL

03.27(01) THRESHING, DRIVE IDLER

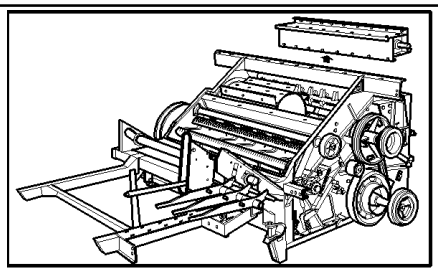

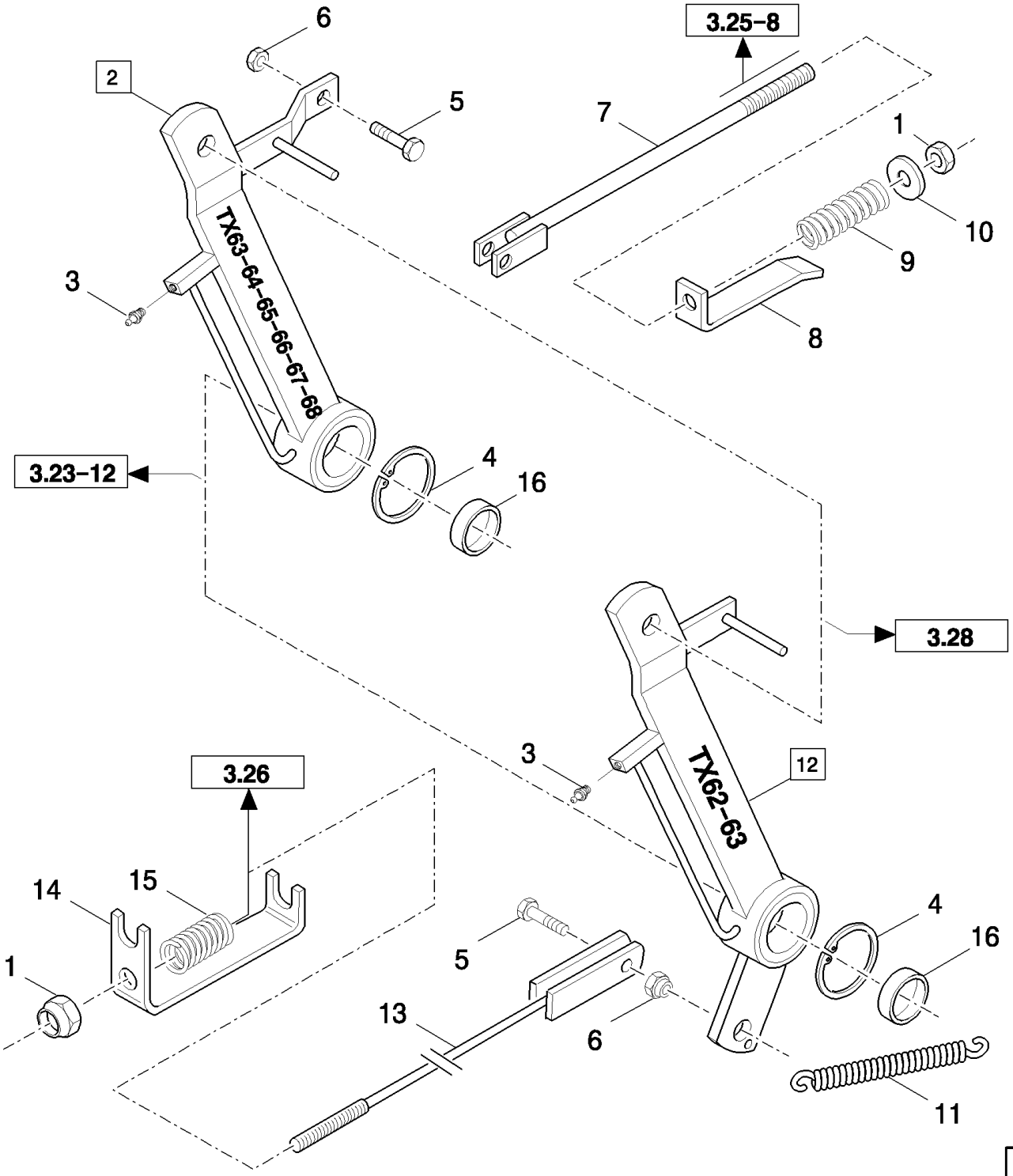

TX68 COMBINE - BASE UNIT

03.27(01) THRESHING, DRIVE IDLER

ссылка	Номер детали	Кол-во	Описание
1	412126	1	NUT, LOCK, M12 x 1.75, Cl 8,
2	84021643	1	LEVER, IDLER, (16), FOR TX64-65-66-67-68 ONLY, FOR TX63 WITH REMOTE CONTROL, -C1193
2	9832634	1	LEVER, IDLER, (16), FOR TX63 WITH REMOTE CONTROL, FOR TX64-65-66-67-68 ONLY, D1194-
3	323787	1	NIPPLE, LUBE,
4	300637	1	RING, SNAP, M75, Ext,
5	120112	1	BOLT, Hex, M10 x 40, 8.8, Full Thd,
6	100016	1	NUT, M10, Cl 8,
7	9832379	1	TIE-ROD, , FOR TX64-65-66-67-68 ONLY, FOR TX63 WITH REMOTE CONTROL
8	9850486	1	INDICATOR, , FOR TX63 WITH REMOTE CONTROL, FOR TX64-65-66-67-68 ONLY
9	180091	1	SPRING, , FOR TX64-65-66-67-68 ONLY, FOR TX63 WITH REMOTE CONTROL
10	378245	1	WASHER, M12,
11	391151	1	SPRING, , FOR TX62-63 ONLY, FOR TX63 WITHOUT REMOTE CONTROL
12	9819066	1	LEVER, IDLER, (16), FOR TX63 WITHOUT REMOTE CONTROL, FOR TX62-63 ONLY, -C1193
12	84429925	1	LEVER, , FOR TX62-63 ONLY, FOR TX63 WITHOUT REMOTE CONTROL, D1194-
13	89814335	1	TIE-ROD, , FOR TX63 WITHOUT REMOTE CONTROL, FOR TX62-63 ONLY
14	89814336	1	BRACKET, , FOR TX62-63 ONLY, FOR TX63 WITHOUT REMOTE CONTROL
15	9516122	1	SPRING, , FOR TX63 WITHOUT REMOTE CONTROL, FOR TX62-63 ONLY
16	80747991	2	SLEEVE,

03.28(01) THRESHING, DRIVE IDLER

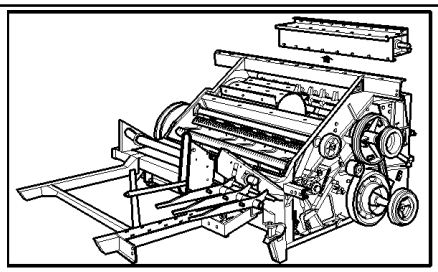

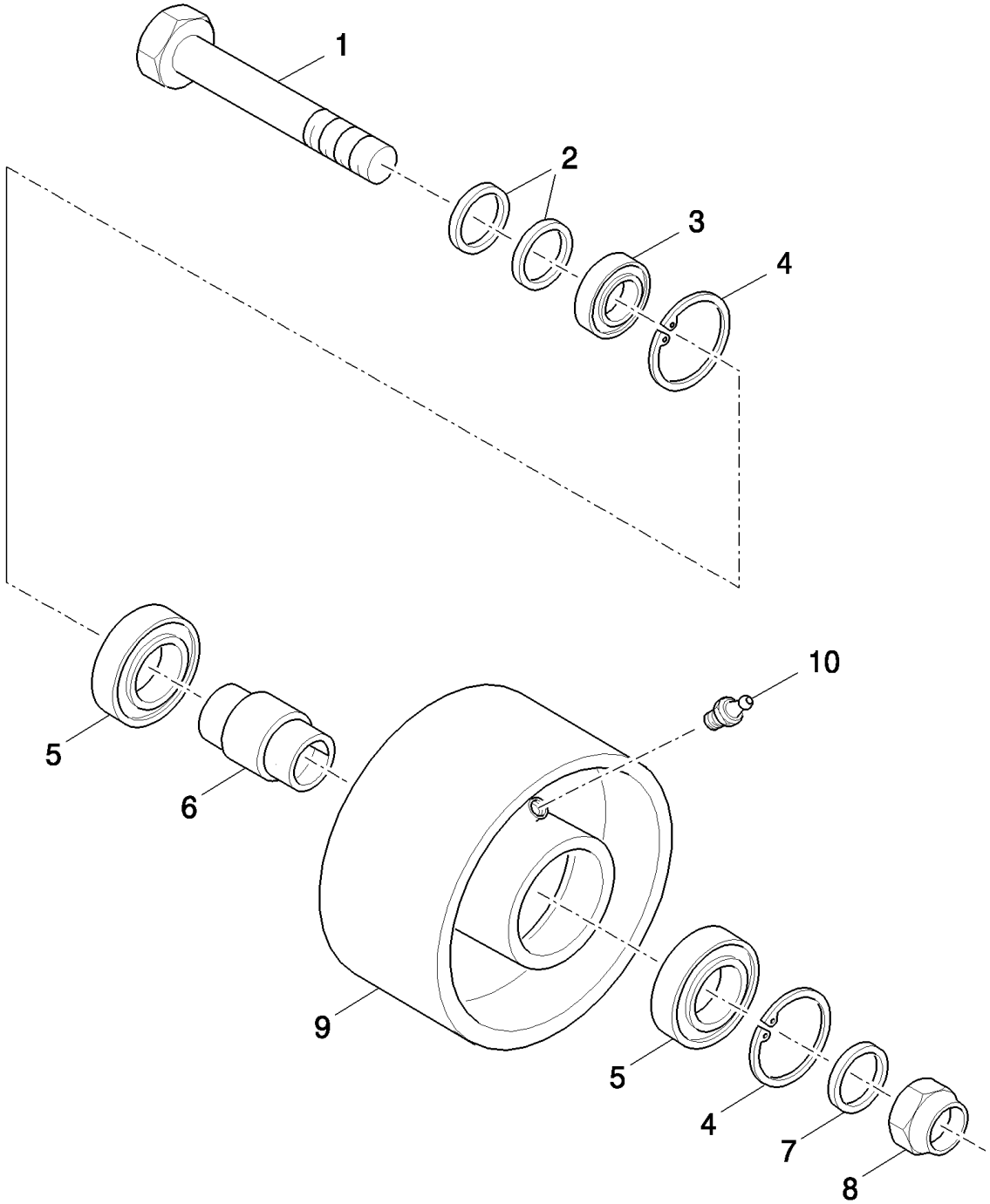

TX68 COMBINE - BASE UNIT

03.28(01) THRESHING, DRIVE IDLER

ссылка	Номер детали	Кол-во	Описание
1	43874	1	SCREW, Hex, M16 x 110, 8.8,
1	374889	1	BOLT, Hex, M16 x 100, 8.8,
2	378246	AR	WASHER, 16MM
3	750169	1	BUSHING, , -C1193
3	84429854	1	BUSHING, , D1194-
4	370011	2	RING, SNAP, M52, Int,
5	84057966	2	BEARING, BALL,
6	9817362	1	BUSHING,
7	140190	1	WASHER, 16MM
8	86000441	1	NUT, M16 x 2, Cl 8,
9	9817376	1	PULLEY,
10	321204	1	NIPPLE, LUBE, M6 x 1, 16mm lg,

03.29(01) PULLEY ON BEATERSHAFT, LH

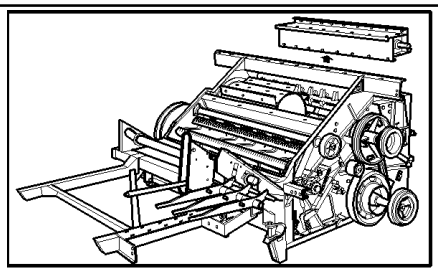

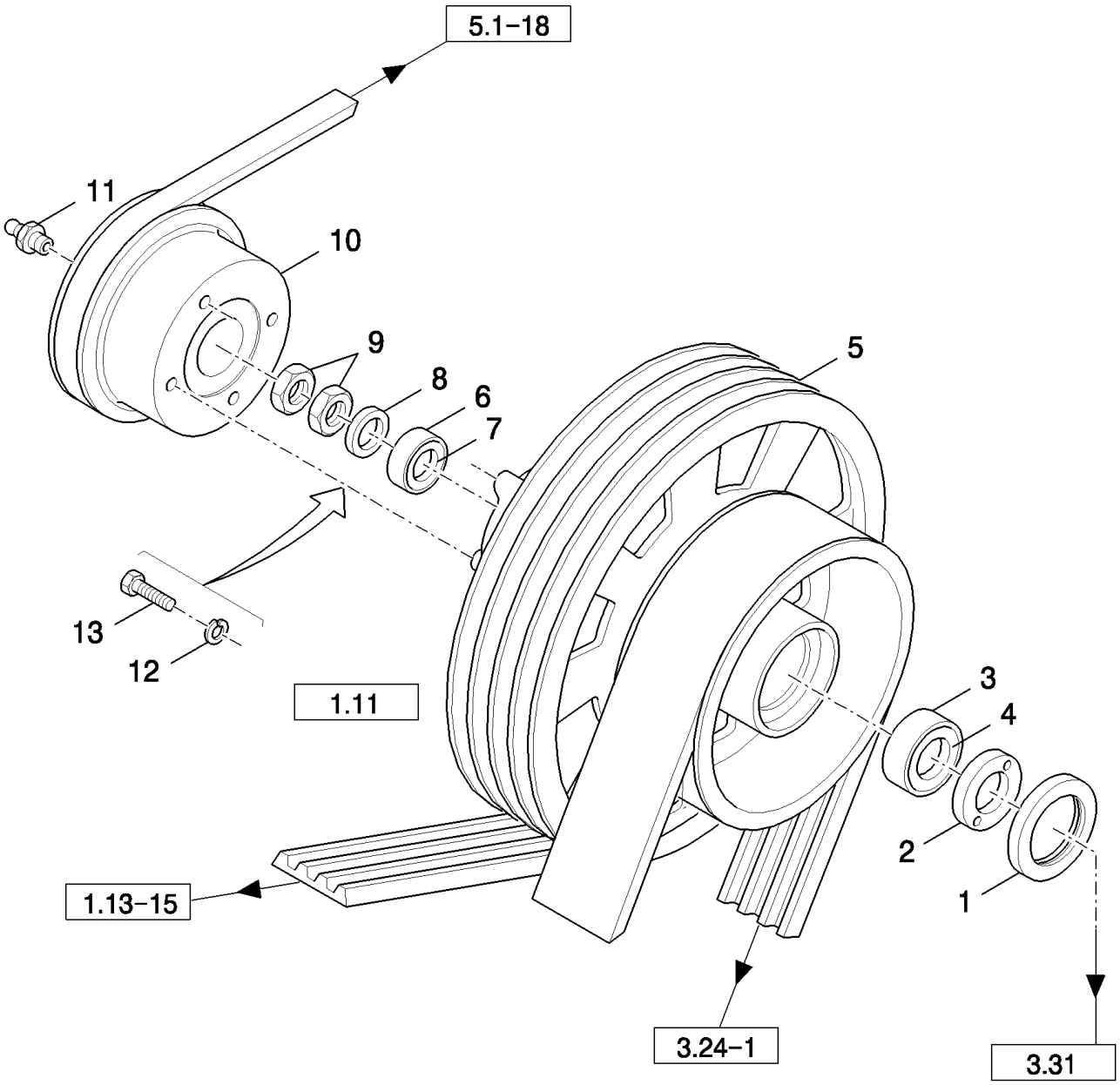

TX68 COMBINE - BASE UNIT

03.29(01) PULLEY ON BEATERSHAFT, LH

ссылка	Номер детали	Кол-во	Описание
1	375400	1	ELEMENT, SEALING,
2	434405	1	BUSHING,
3	199955	1	BEARING, CUP,
4	199954	1	BEARING, ROLLER,
5	439694	1	PULLEY,
6	86516467	1	BEARING, CUP,
7	48977	1	BEARING, CONE,
8	411976	1	WASHER,
9	100033	2	NUT, Thin, M24 x 1.5, Cl 04,
10	9813877	1	PULLEY,
11	321204	1	NIPPLE, LUBE, M6 x 1, 16mm lg,
12	140045	6	WASHER, SPRING, Belleville, M10,
13	43140	6	BOLT, Hex, M10 x 30, 8.8, Full Thd,

03.30(01) BEATER IDLER AND PULLEY, RH

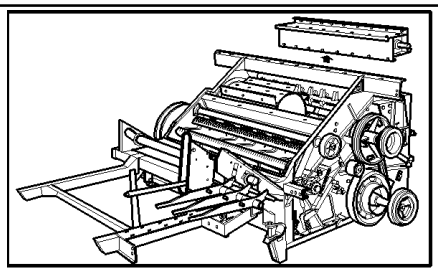

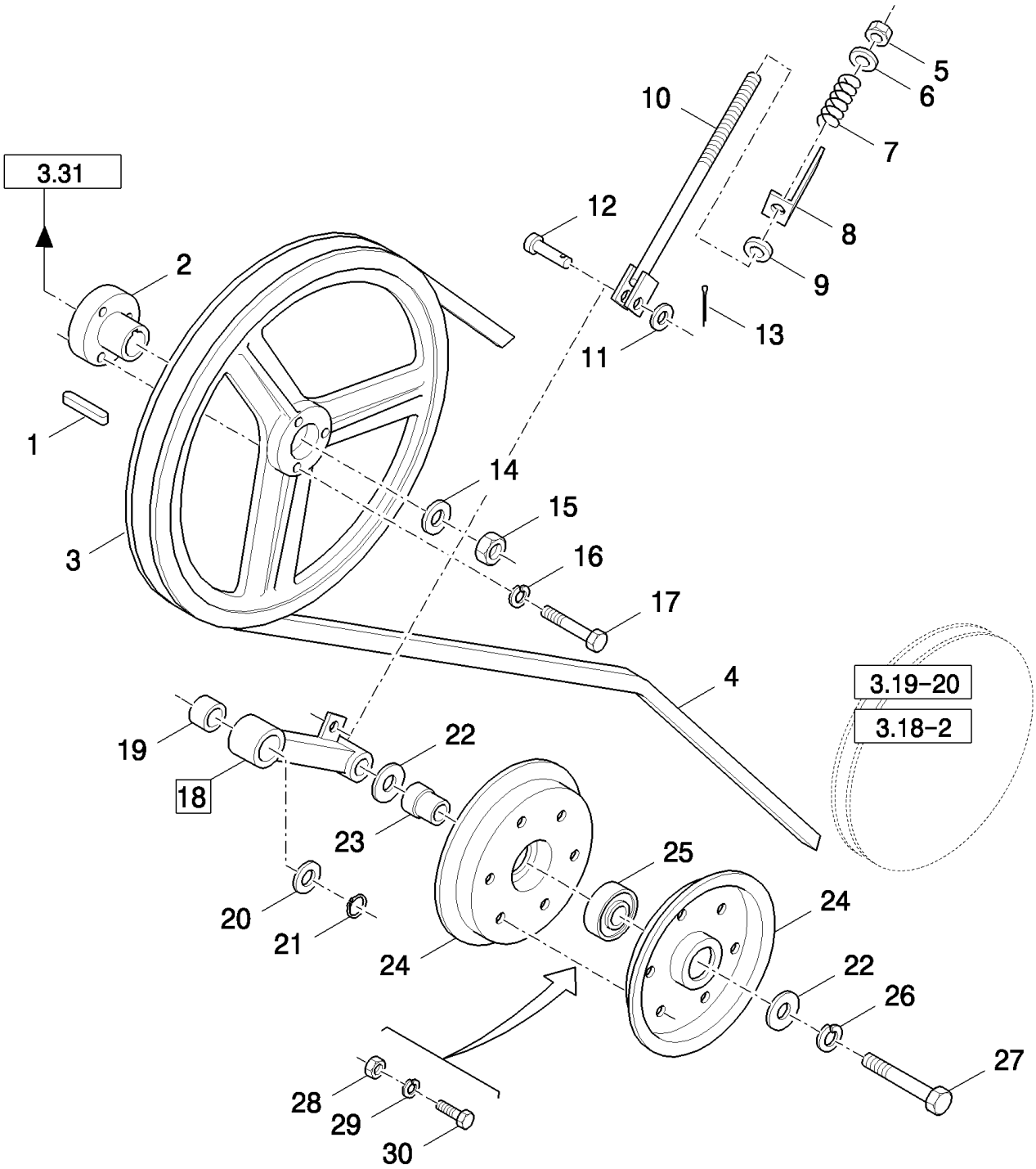

FOR VARIABLE BEATER DRIVE ONLY

TX68 COMBINE - BASE UNIT

03.30(01) BEATER IDLER AND PULLEY, RH

ссылка	Номер детали	Кол-во	Описание
1	170066	1	KEY,
2	9818028	1	FLANGE,
3	9818030	1	PULLEY,
4	84817628	1	BELT, TRANSMISSION,
5	412126	1	NUT, LOCK, M12 x 1.75, Cl 8,
6	378245	1	WASHER, M12,
7	180091	1	SPRING,
8	442947	1	INDICATOR, , -C5660
8	84022289	1	INDICATOR, , D5660-
9	439857	1	BUSHING,
10	455412	1	ROD, ADJUSTMENT,
11	140077	1	WASHER, 10.5MM
12	322901	1	PIN,
13	130004	1	PIN, SPLIT (COTTER), M3.2 x 25,
14	411961	1	WASHER,
15	300852	1	NUT, M30 x 1.5, Cl 8, M30
16	140046	3	WASHER, Belleville, M12,
17	120122	3	BOLT, Hex, M12 x 50, 8.8, Full Thd, M12x45
18	455756	1	LEVER, (19)
19	80395589	2	SLEEVE,
20	140103	1	WASHER,
21	370002	1	RING, SNAP, M25, Ext,
22	378246	AR	WASHER, 16MM
23	9515145	1	BUSHING,
24	434227	2	PULLEY,
25	443898	1	BEARING, BALL,
26	140048	1	WASHER, SPRING, Belleville, M16,
27	120091	1	BOLT, Hex, M16 x 60, 8.8,
28	9706690	6	NUT, M8, Cl 8,
29	322358	6	WASHER, SPRING, Belleville, M8,
30	16043224	6	BOLT, Hex, M8 x 16, 8.8, Full Thd,

FOR VARIABLE BEATER DRIVE ONLY

03.30A(01) BEATER IDLER AND PULLEY, RH (TX68PLUS)

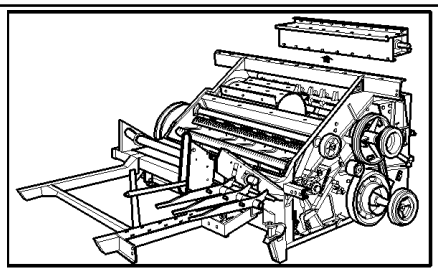

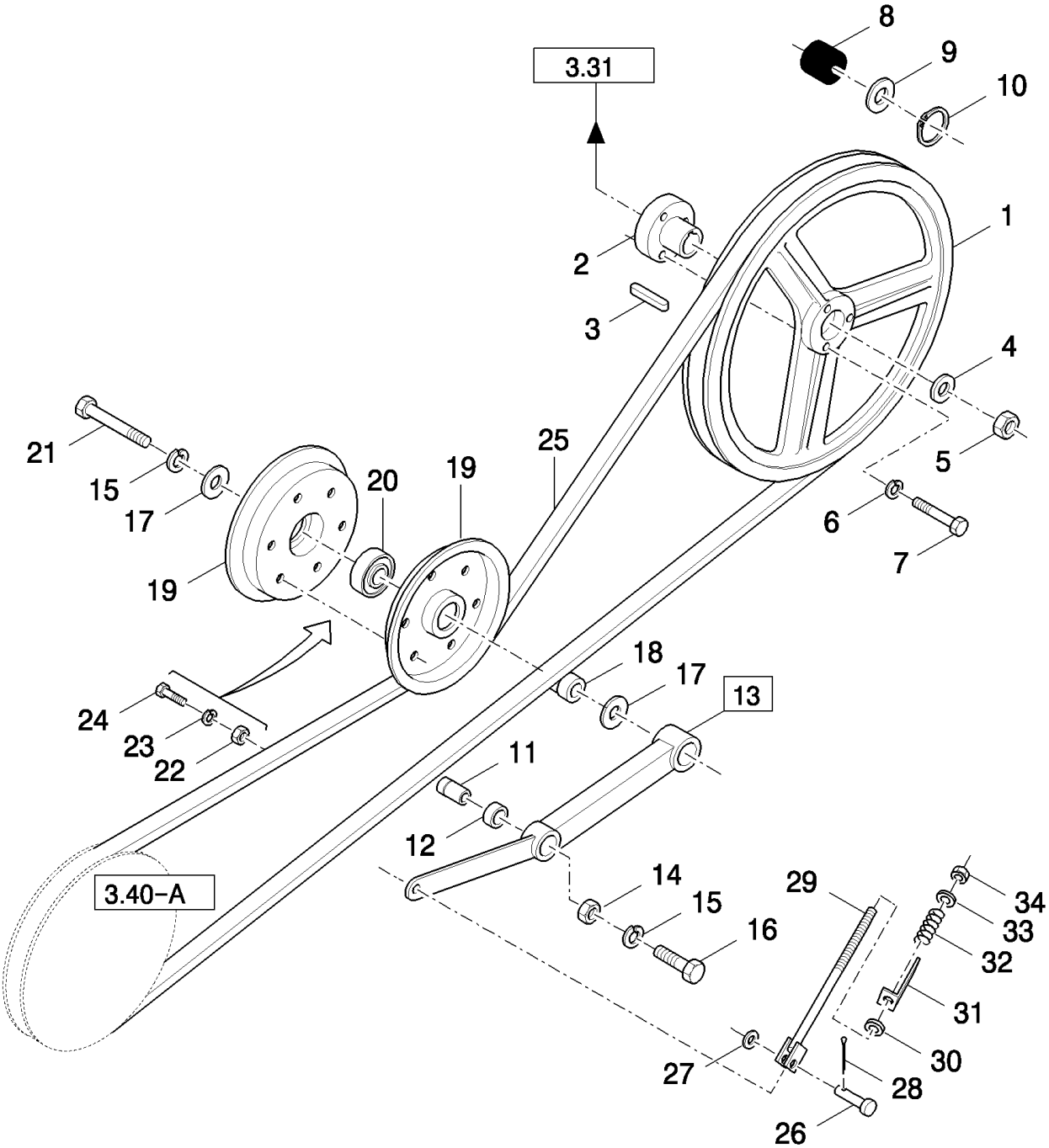

FOR CONSTANT BEATER DRIVE ONLY

TX68 COMBINE - BASE UNIT

03.30A(01) BEATER IDLER AND PULLEY, RH (TX68PLUS)

ссылка	Номер детали	Кол-во	Описание
1	84038090	1	PULLEY,
2	9818028	1	FLANGE,
3	170066	1	KEY,
4	411961	1	WASHER,
5	300852	1	NUT, M30 x 1.5, Cl 8, M30
6	140046	3	WASHER, Belleville, M12,
7	120122	3	BOLT, Hex, M12 x 50, 8.8, Full Thd,
8	84043523	1	BUSHING, RUBBER,
9	140103	1	WASHER,
10	370002	1	RING, SNAP, M25, Ext,
11	84039550	1	BUSHING,
12	382975	2	SLEEVE,
13	84038018	1	LEVER, (12)
14	394631	1	WASHER, 16MM
15	140048	1	WASHER, SPRING, Belleville, M16,
16	120092	1	SCREW, Hex, M16 x 70, 8.8,
17	378246	AR	WASHER, 16MM
18	441111	1	BUSHING,
19	434227	2	PULLEY,
20	443898	1	BEARING, BALL,
21	120090	1	SCREW, Hex, M16 x 50, 8.8,
22	9706690	6	NUT, M8, Cl 8,
23	322358	6	WASHER, SPRING, Belleville, M8,
25	84038109	1	BELT, TRANSMISSION,
26	322901	1	PIN,
27	140077	1	WASHER,
28	130004	1	PIN, SPLIT (COTTER), M3.2 x 25,
29	455412	1	ROD, ADJUSTMENT,
30	439857	1	BUSHING,
31	84022289	1	INDICATOR,
32	180091	1	SPRING,
33	378245	1	WASHER, M12,
34	412126	1	NUT, LOCK, M12 x 1.75, Cl 8,
24	16043224	6	BOLT, Hex, M8 x 16, 8.8, Full Thd,

FOR CONSTANT BEATER DRIVE ONLY

03.31(01) BEATERSHAFT AND BEARINGS

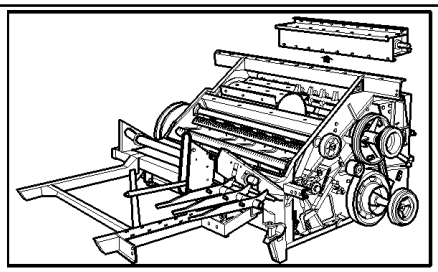

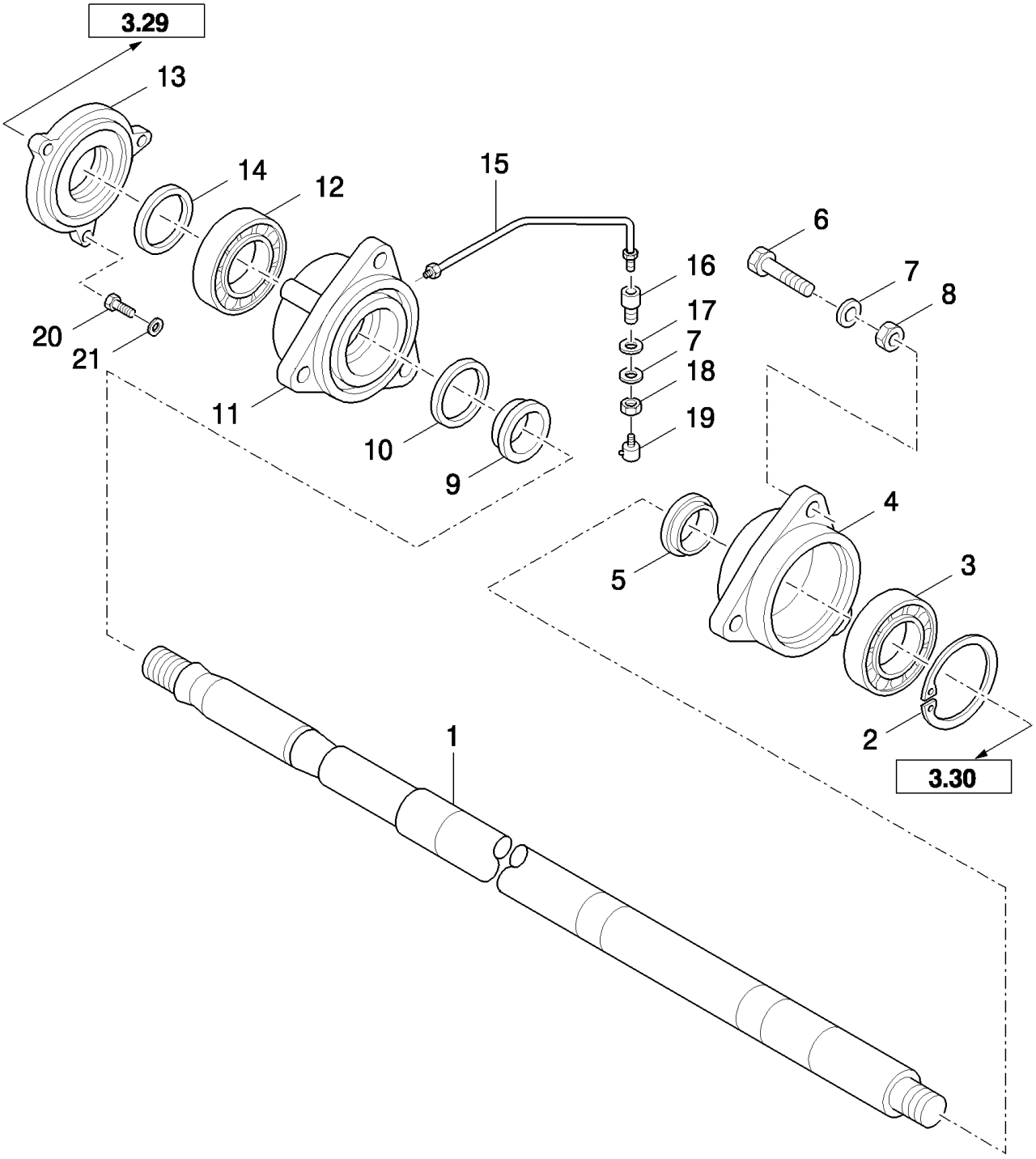

TX68 COMBINE - BASE UNIT

03.31(01) BEATERSHAFT AND BEARINGS

ссылка	Номер детали	Кол-во	Описание
1	916465	1	SHAFT, , FOR TX66-67-68 ONLY
1	9507213	1	SHAFT, , FOR TX62-63-64-65 ONLY
2	370026	1	RING, SNAP, Int, M100 x 3,
3	210086	1	BEARING ASSY,
4	433908	1	HOUSING, BEARING,
5	200291	1	RING,
6	43140	6	BOLT, Hex, M10 x 30, 8.8, Full Thd,
7	140045	7	WASHER, SPRING, Belleville, M10,
8	378244	8	WASHER, M10,
9	9811581	1	RING,
10	309088	1	ELEMENT, SEALING,
11	9811576	1	HOUSING, BEARING,
12	9516384	1	BEARING ASSY,
13	9811578	1	COVER,
14	412703	1	ELEMENT, SEALING,
15	9811580	1	TUBE, RIGID,
16	9510459	1	CONNECTOR, HYD.,
17	447336	1	WASHER,
18	100016	1	NUT, M10, Cl 8,
19	323787	1	NIPPLE, LUBE,
20	80120099	3	BOLT, Hex, M6 x 16, 8.8,
21	322357	3	WASHER, SPRING, Belleville, M6,

03.32(01) BEATER

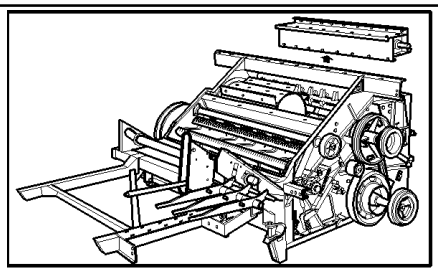

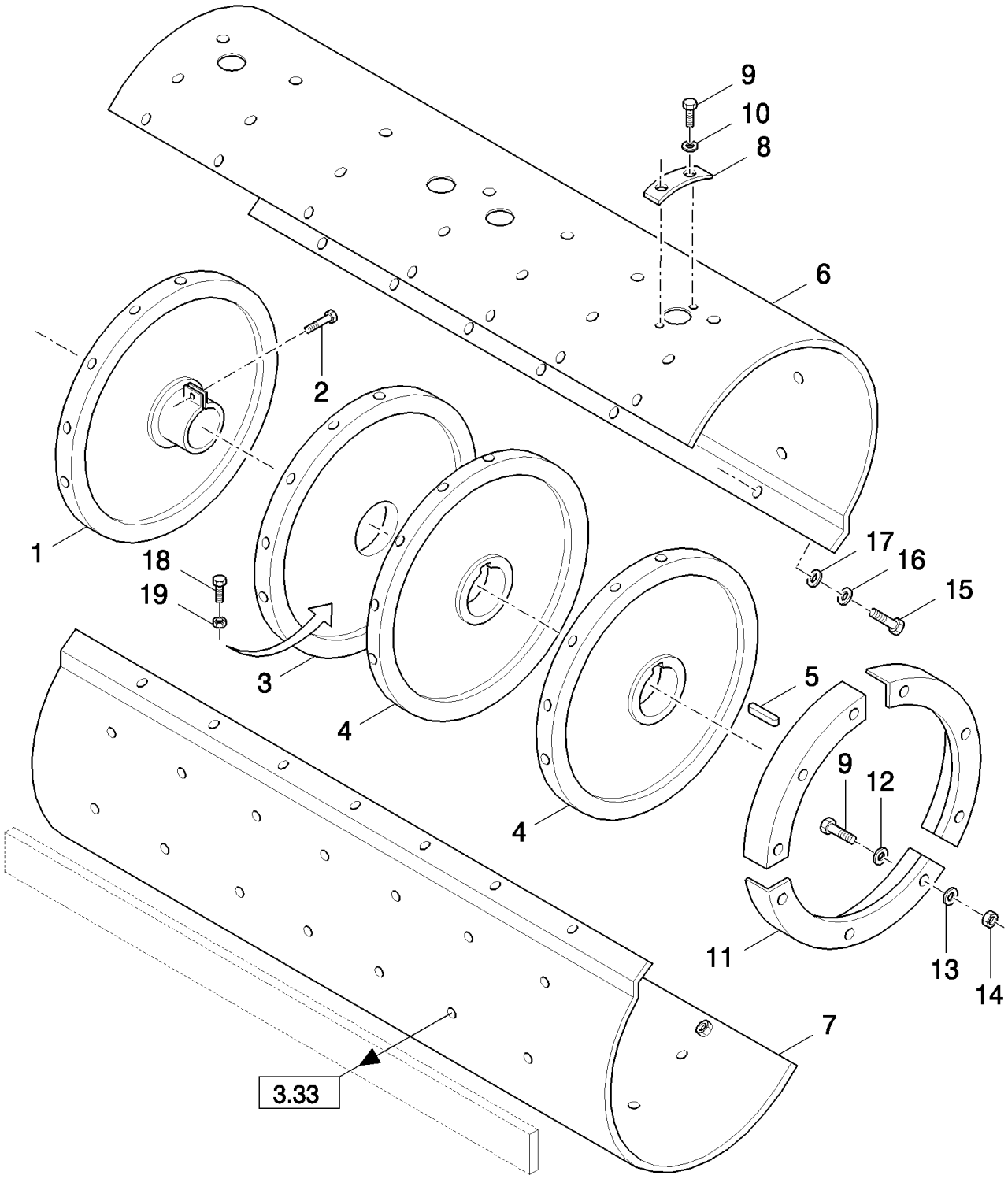

TX68 COMBINE - BASE UNIT

03.32(01) BEATER

ссылка	Номер детали	Кол-во	Описание
1	9811478	1	DISC,
2	300512	1	SCREW, Hex, M12 x 55, 8.8,
3	9815664	1	DISC, , FOR TX66-68 ONLY
4	9811477	2	DISC,
5	426211	2	KEY,
6	9811472	1	SHEET METAL, , FOR TX66-67-68 ONLY
6	9811624	1	PLATE, , FOR TX62-63-64-65 ONLY
7	9811473	1	PLATE, , FOR TX66-67-68 ONLY
7	9811625	1	PLATE, , FOR TX62-63-64-65 ONLY
8	9819031	5	COVER,
9	80120099	28	BOLT, Hex, M6 x 16, 8.8,
10	322357	10	WASHER, SPRING, Belleville, M6,
11	429141	6	ANGLE,
12	418538	18	WASHER,
13	140040	18	WASHER, M6 x 22 x 2,
14	353308	18	NUT, M6 x 1, Cl 8,
15	9706687	14	SCREW, Hex, M12 x 30, 8.8,
16	140046	14	WASHER, Belleville, M12,
17	543043	14	WASHER,
18	120201	2	BOLT, Hex, M10 x 35, 8.8, Full Thd,
19	320648	2	NUT, M10, Cl 8,

03.33(01) BEATER PLATES AND TEETH

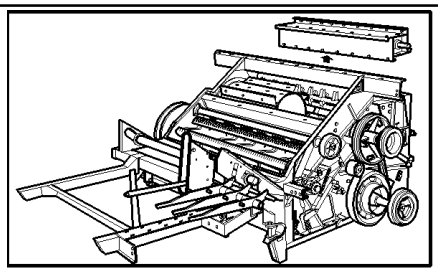

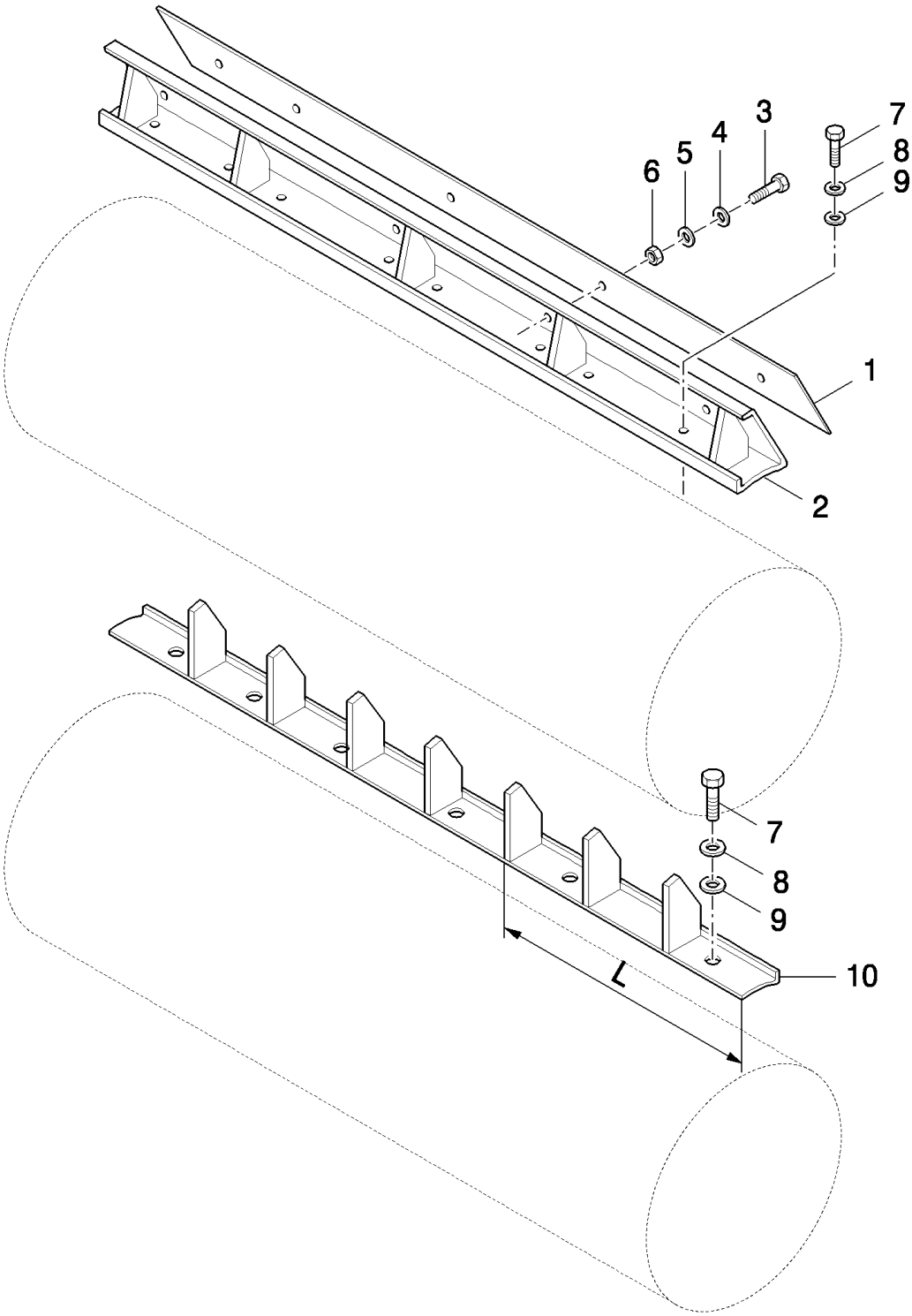

TX68 COMBINE - BASE UNIT

03.33(01) BEATER PLATES AND TEETH

ссылка	Номер детали	Кол-во	Описание
1	391492	5	PLATE, , FOR TX66-67-68 ONLY
1	394369	5	PLATE, , FOR TX62-63-64-65 ONLY
2	9515190	5	SUPPORT, , FOR TX66-67-68 ONLY
2	9515188	5	SUPPORT, , FOR TX62-63-64-65 ONLY
3	120104	AR	SCREW, Hex, M8 x 20, 8.8,
4	378243	AR	WASHER, M8,
5	322358	AR	WASHER, SPRING, Belleville, M8,
6	9706690	AR	NUT, M8, Cl 8,
7	9706687	AR	SCREW, Hex, M12 x 30, 8.8,
8	140046	AR	WASHER, Belleville, M12,
9	543043	AR	WASHER,
10	9508399	AR	RACK, L:183MM, FOR TX66-67-68 ONLY
10	9508400	AR	SLAT, L:316MM, FOR TX66-67-68 ONLY
10	9508401	AR	RACK, L:290.5MM, FOR TX66-67-68 ONLY
10	9508402	AR	SLAT, L:265MM, FOR TX66-67-68 ONLY
10	9508403	AR	RACK, L:208.5MM, FOR TX66-67-68 ONLY
10	89508387	AR	RACK, L:341.5MM, FOR TX62-63-64-65 ONLY
10	9508388	AR	SLAT, L:157.5MM, FOR TX62-63-64-65 ONLY
10	89508389	AR	RACK, L:290.5MM, FOR TX62-63-64-65 ONLY
10	9508390	AR	RACK, L:265MM, FOR TX62-63-64-65 ONLY
10	9508391	AR	SLAT, L:208.5MM, FOR TX62-63-64-65 ONLY

03.34(01) BEATER, FIXED CONCAVE - UNTIL --08999

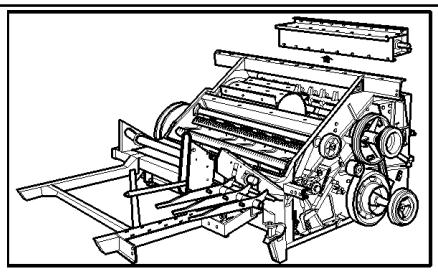

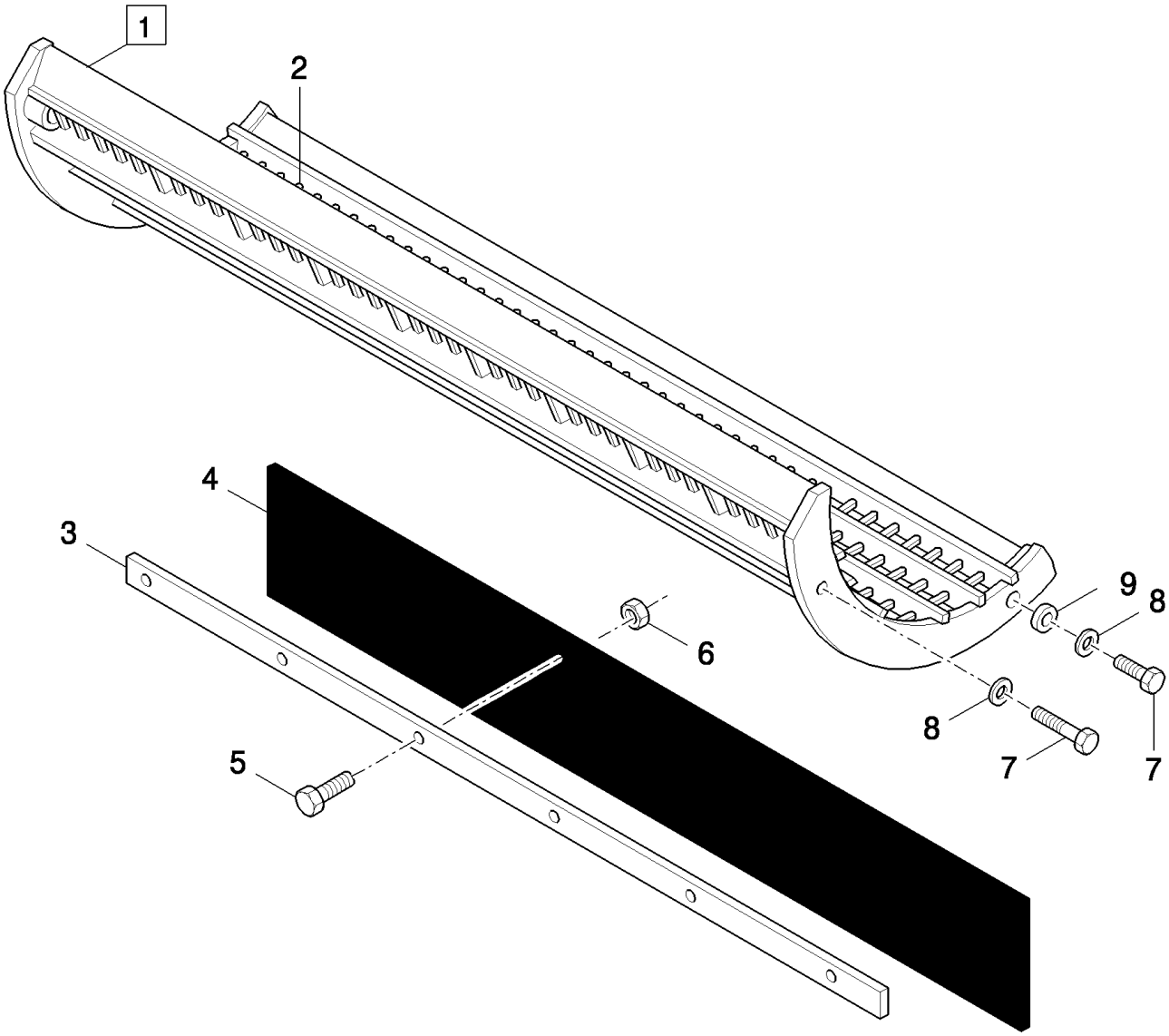

TX68 COMBINE - BASE UNIT

03.34(01) BEATER, FIXED CONCAVE - UNTIL --08999

ссылка	Номер детали	Кол-во	Описание
1	84007178	1	CONCAVE, [2(36x)]
1	84007177	1	CONCAVE, RICE [2(12x)]
2	9502016	AR	WIRE, RETAINING,
3	457881	1	PLATE, FIXING,
4	84012917	1	CURTAIN,
5	80120099	8	BOLT, Hex, M6 x 16, 8.8,
6	353308	8	NUT, M6 x 1, Cl 8,
7	300388	4	SCREW, Hex, M12 x 25, 8.8,
8	140046	4	WASHER, Belleville, M12,
9	378245	2	WASHER, M12,

03.35(01) BEATER, ADJUSTABLE CONCAVE

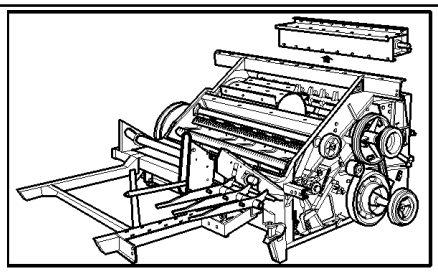

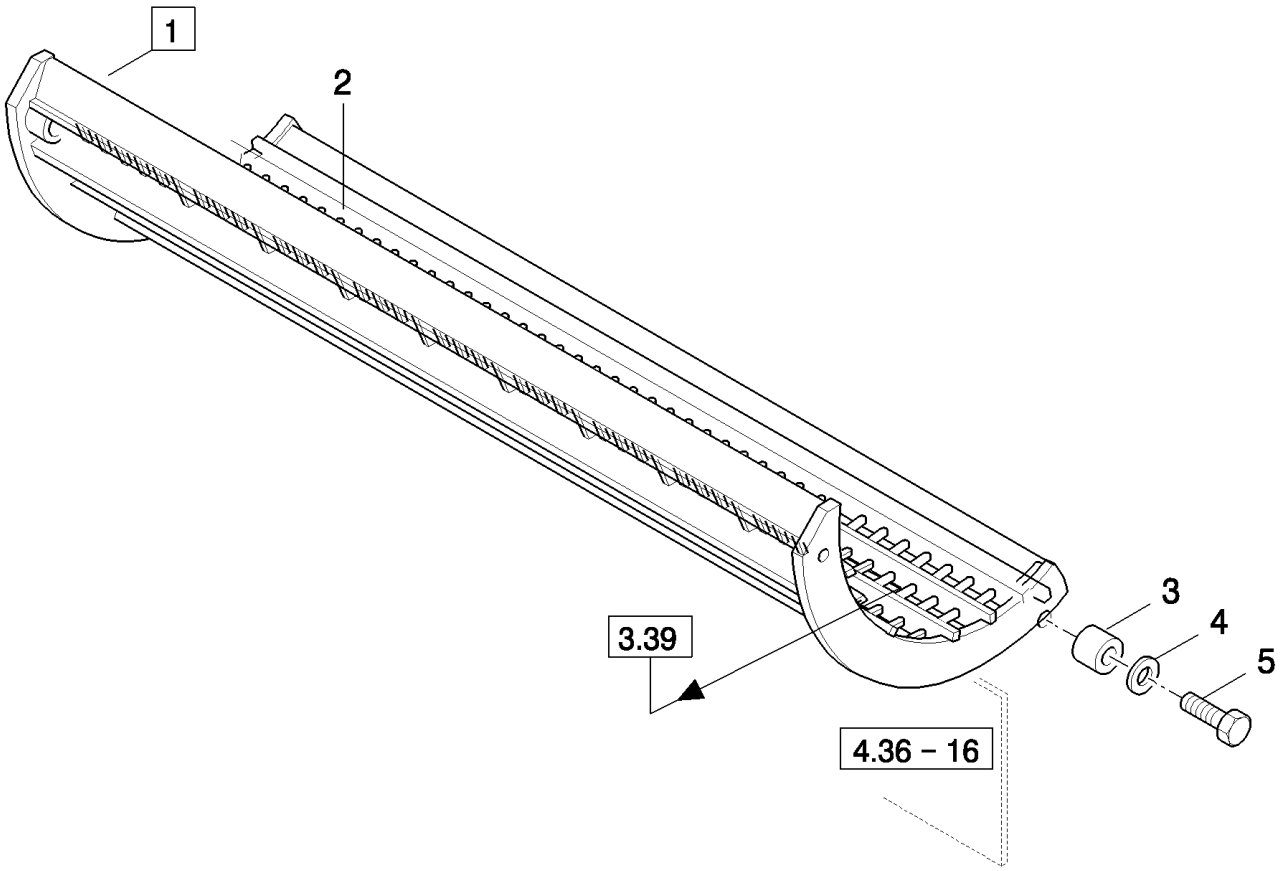

ONLY VALID FROM 4801001 (TX62) - 461033001 (TX63) - 4901001 (TX64) - 6601001 (TX65) - 5009001 (TX66) - 5109001 (TX68)

TX68 COMBINE - BASE UNIT

03.35(01) BEATER, ADJUSTABLE CONCAVE

ссылка	Номер детали	Кол-во	Описание
1	84017012	1	CONCAVE, [2(36x)], FOR TX66-67-68 ONLY
1	84017965	1	CONCAVE, RICE [2(12x)], FOR TX66-68 ONLY
1	84017011	1	CONCAVE, [2(36x)], FOR TX62-63-64-65 ONLY
1	84017964	1	CONCAVE, RICE [2(12x)], FOR TX62-63-64-65 ONLY
2	84011172	AR	WIRE, RETAINING,
3	84031869	2	BUSHING,
4	394631	2	WASHER, 16MM
5	120091	2	BOLT, Hex, M16 x 60, 8.8,

ONLY VALID FROM 4801001 (TX62) - 461033001 (TX63) - 4901001 (TX64) - 6601001 (TX65) - 5009001 (TX66) - 5109001 (TX68)

03.36(01) ROTARY SEPARATOR AND WEAR PLATES

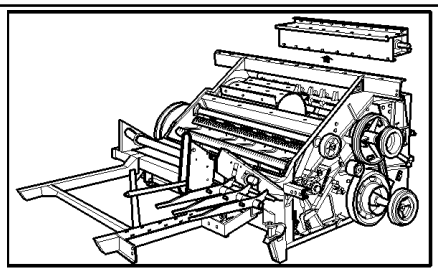

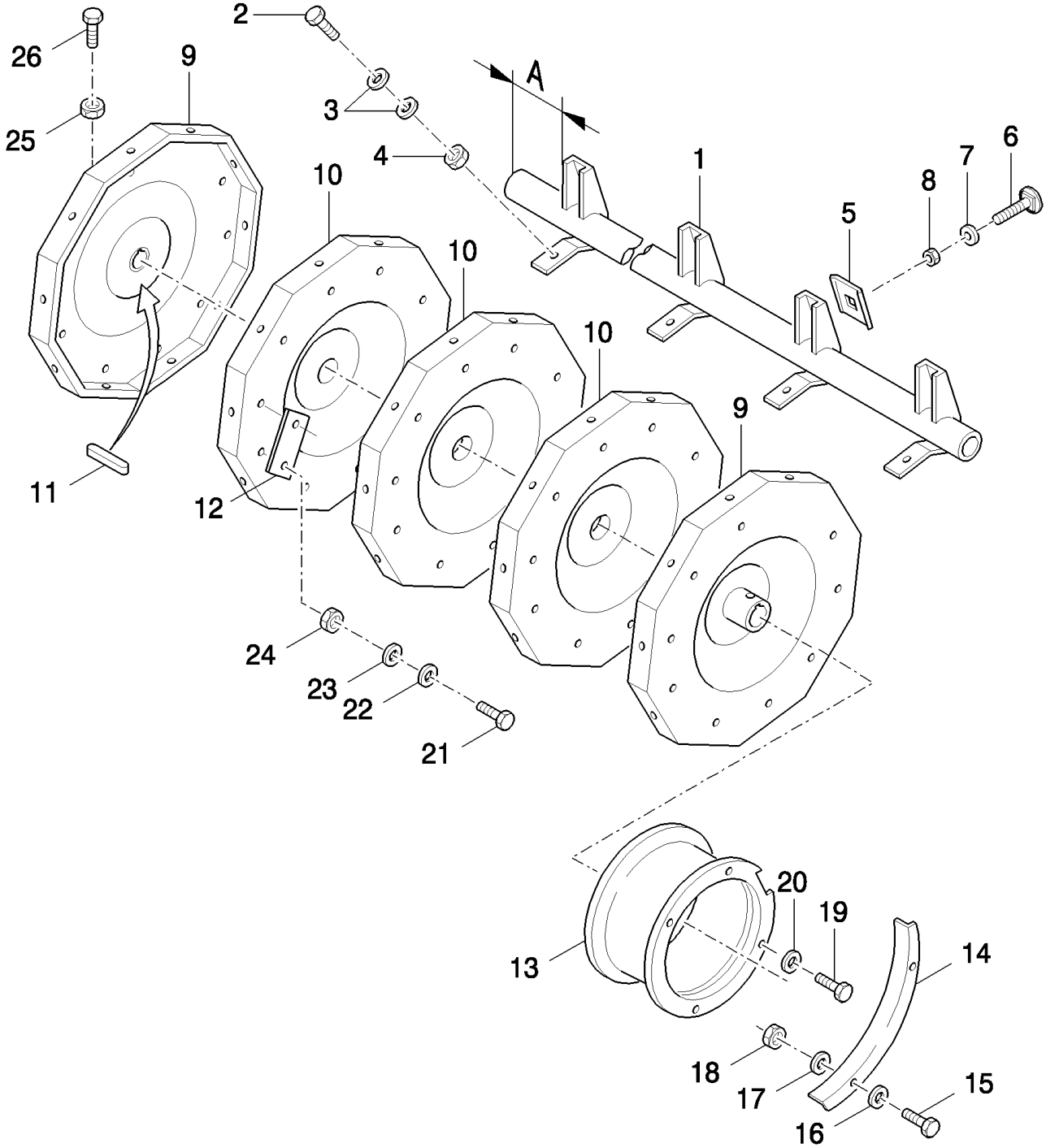

TX68 COMBINE - BASE UNIT

03.36(01) ROTARY SEPARATOR AND WEAR PLATES

ссылка	Номер детали	Кол-во	Описание
1	9515988	5	SLAT, A:115MM, FOR TX66-67-68 ONLY
1	9515987	5	RACK, A:122MM, FOR TX62-63-64-65 ONLY
1	9515989	5	RACK, A:20MM, FOR TX66-67-68 ONLY
1	9515986	5	RACK, A:27MM, FOR TX62-63-64-65 ONLY
2	9509260	AR	BOLT, Hex Lock, M12 x 45, 8.8, Full Thd,
3	362298	AR	WASHER,
4	337475	AR	NUT, M12, Cl 10,
5	9510423	AR	PLATE, SKID,
6	338949	AR	BOLT, CARRIAGE, Short NK, M10 x 25, Cl8.8, Full Thd,
7	378244	AR	WASHER, M10,
8	100037	AR	NUT, M10 x 1.5, Cl 8,
9	84062365	2	DISC,
10	439856	4	DISC, , FOR TX66-67-68 ONLY
10	439856	3	DISC, , FOR TX62-63-64-65 ONLY
11	323624	2	KEY,
12	481494	AR	PLATE, , -C1241
12	351518	AR	PLATE, ADJUSTING, , D1242-
13	9515746	2	PROTECTING COVER,
14	441531	2	ANGLE,
15	80120099	4	BOLT, Hex, M6 x 16, 8.8,
16	418538	4	WASHER,
17	140040	4	WASHER, M6 x 22 x 2,
18	353308	4	NUT, M6 x 1, Cl 8,
20	322358	6	WASHER, SPRING, Belleville, M8,
21	120104	AR	SCREW, Hex, M8 x 20, 8.8,
22	378243	AR	WASHER, M8,
23	9706690	AR	NUT, M8, Cl 8,
24	320648	2	NUT, M10, Cl 8,
25	120201	2	BOLT, Hex, M10 x 35, 8.8, Full Thd,
19	16043224	6	BOLT, Hex, M8 x 16, 8.8, Full Thd,

03.37(01) FIXED ROTARY SEPARATOR, CONCAVE - UNTIL --08999

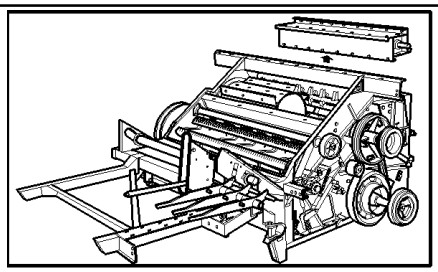

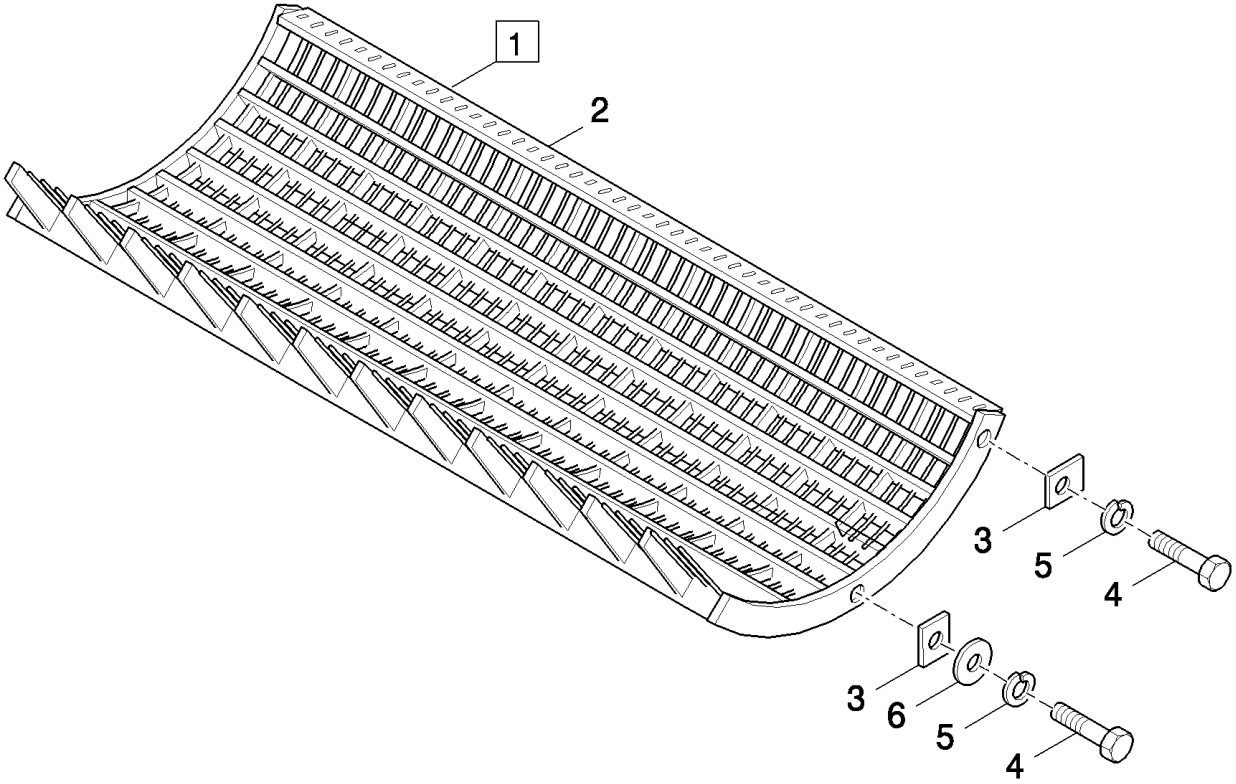

TX68 COMBINE - BASE UNIT

03.37(01) FIXED ROTARY SEPARATOR, CONCAVE - UNTIL --08999

ссылка	Номер детали	Кол-во	Описание
1	84007176	1	CONCAVE, (2)
2	9502024	36	WIRE, RETAINING,
3	9813454	4	PLATE,
4	86629541	4	BOLT, Hex, M12 x 40, 8.8, Full Thd,
5	140046	6	WASHER, Belleville, M12,
6	140086	2	WASHER,

03.38(01) ADJUSTABLE ROTARY SEPARATOR, CONCAVE

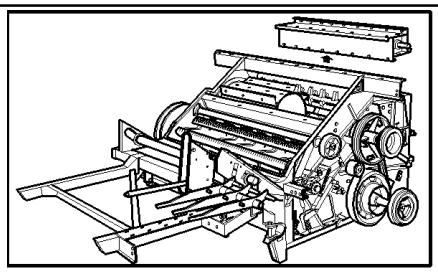

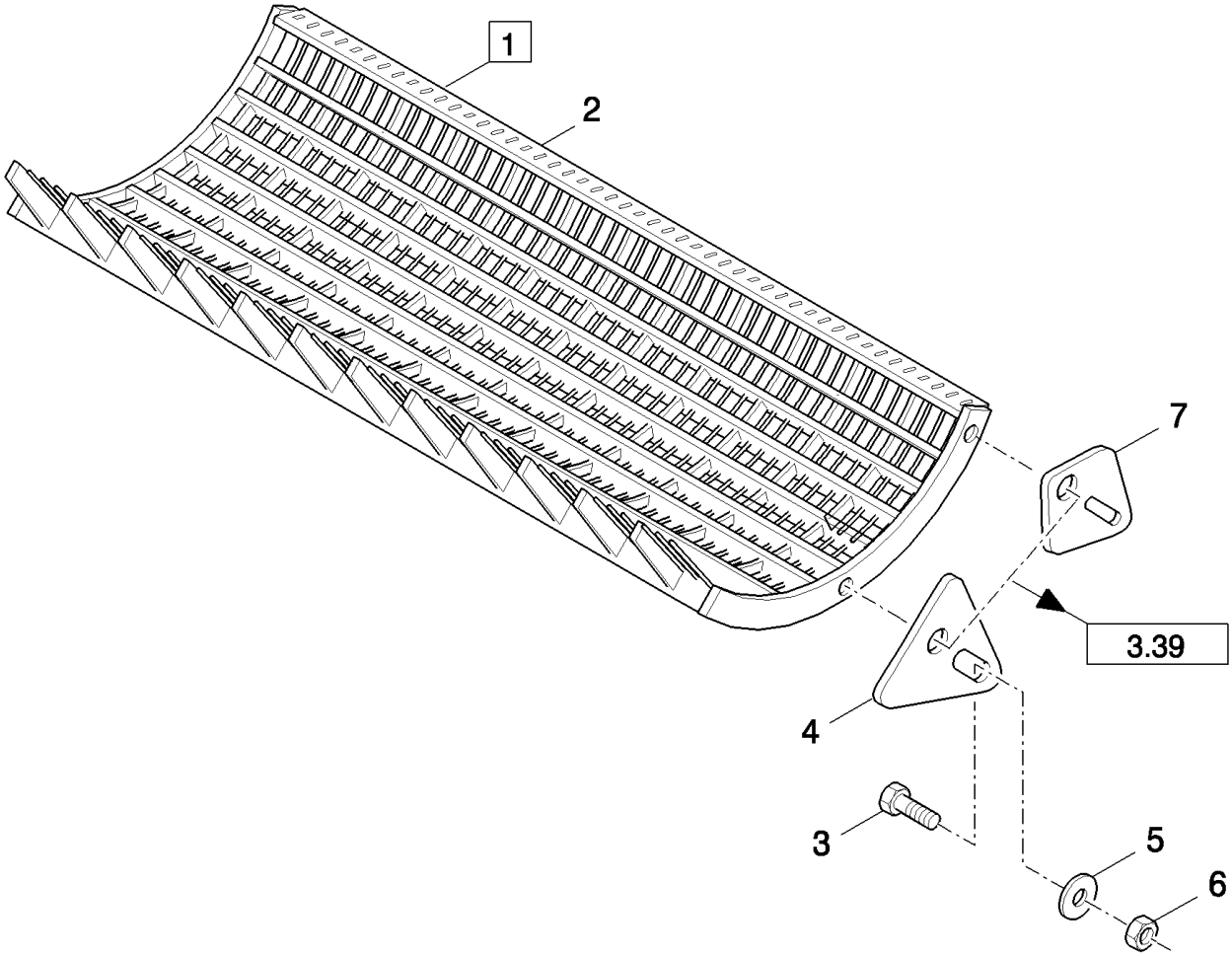

ONLY VALID FROM 4801001 (TX62) - 461033001 (TX63) - 4901001 (TX64) - 6601001 (TX65) - 5009001 (TX66) - 5109001 (TX68)

TX68 COMBINE - BASE UNIT

03.38(01) ADJUSTABLE ROTARY SEPARATOR, CONCAVE

ссылка	Номер детали	Кол-во	Описание
1	84018064	1	CONCAVE, [2(36x)], FOR TX66-67-68 ONLY
1	84017975	1	CONCAVE, [2(30x)], FOR TX62-63-64-65 ONLY
2	84011227	AR	WIRE,
3	86507486	4	BOLT, CARRIAGE, Short NK, M8 x 20, Cl8.8, Full Thd,
4	84018011	2	PLATE, COVER, , -C7580
4	84035596	2	PLATE, COVER, , D7580-
5	378243	4	WASHER, M8,
6	86629542	4	NUT, LOCK, M8 x 1.25, Cl 8,
7	84015947	2	PLATE, COVER,

ONLY VALID FROM 4801001 (TX62) - 461033001 (TX63) - 4901001 (TX64) - 6601001 (TX65) - 5009001 (TX66) - 5109001 (TX68)

03.39(01) BEATER AND ROTARY SEPARATOR CONCAVE SUSPENSION

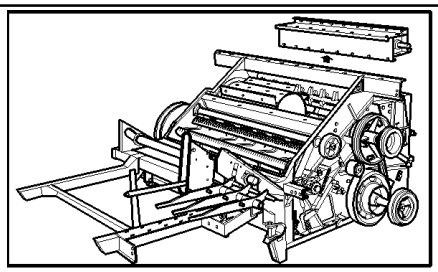

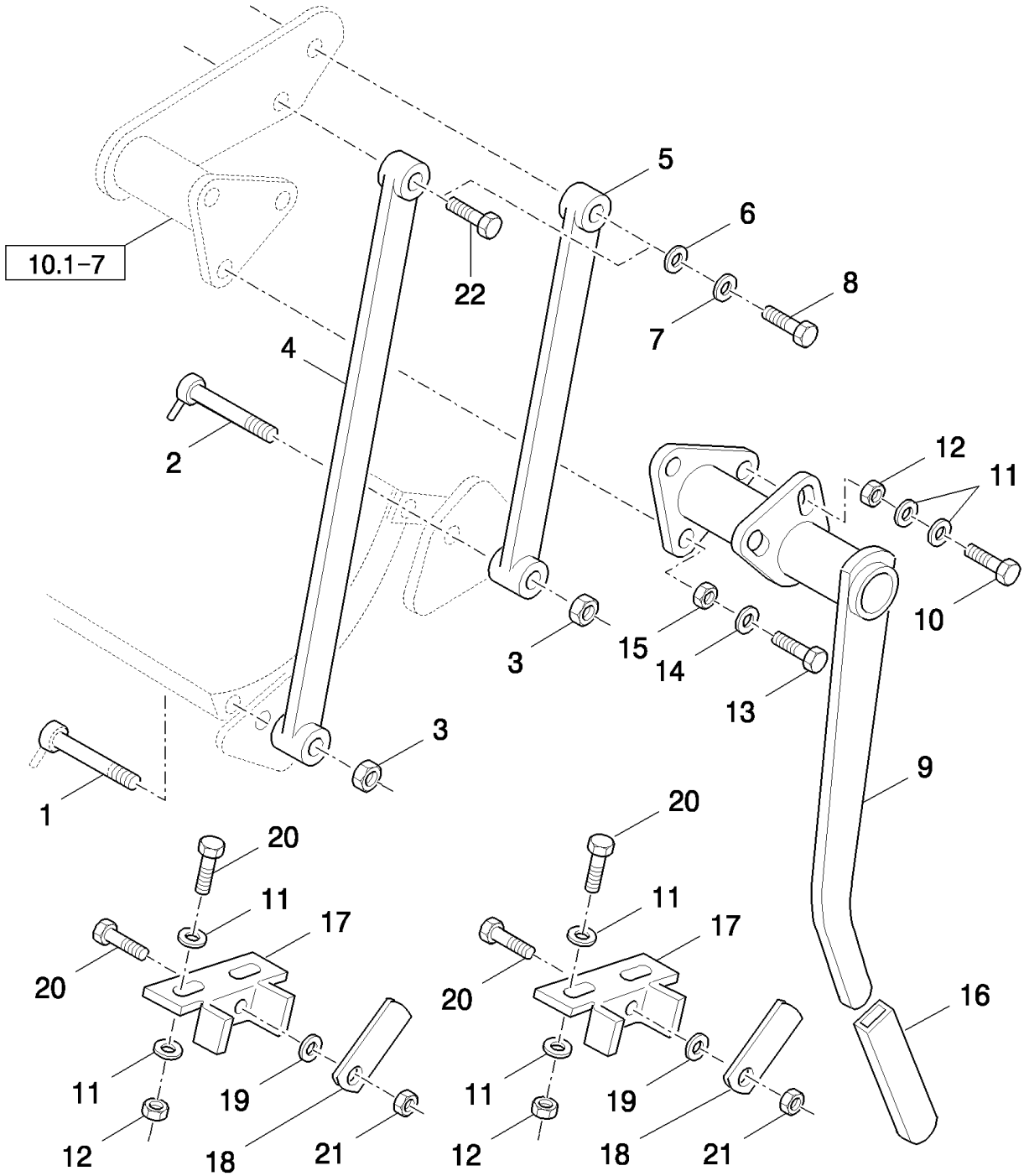

TX68 COMBINE - BASE UNIT

03.39(01) BEATER AND ROTARY SEPARATOR CONCAVE SUSPENSION

ссылка	Номер детали	Кол-во	Описание
1	84015605	2	PIN,
2	84015604	2	PIN,
3	9672396	4	NUT, LOCK, M20
4	84018005	2	SUPPORT,
5	84015862	2	SUPPORT,
6	84015600	4	BUSHING,
7	140048	4	WASHER, SPRING, Belleville, M16,
8	43167	4	BOLT, Hex, M16 x 30, 8.8, Full Thd,
9	84017320	1	LEVER, , -C7580
9	84043723	1	LEVER, , D7580-
10	43140	2	BOLT, Hex, M10 x 30, 8.8, Full Thd,
11	140045	12	WASHER, SPRING, Belleville, M10,
12	100016	6	NUT, M10, Cl 8,
13	86629541	3	BOLT, Hex, M12 x 40, 8.8, Full Thd,
14	394630	3	WASHER, 12MM
15	337475	3	NUT, M12, Cl 10,
16	357545	1	HANDLE GRIP,
17	84017313	2	SUPPORT,
18	84017312	2	PLATE, COVER,
19	80300368	2	WASHER,
20	43138	6	SCREW, Hex, M10 x 20, 8.8, Full Thd,
21	100037	2	NUT, M10 x 1.5, Cl 8,
22	84057410	1	SCREW,

03.40(01) ROTARY SEPARATOR DRIVE AND SHAFT

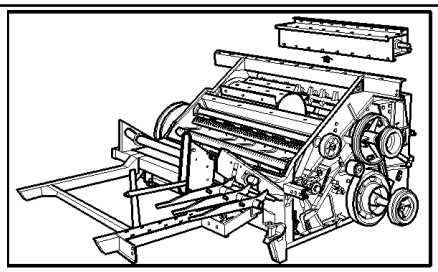

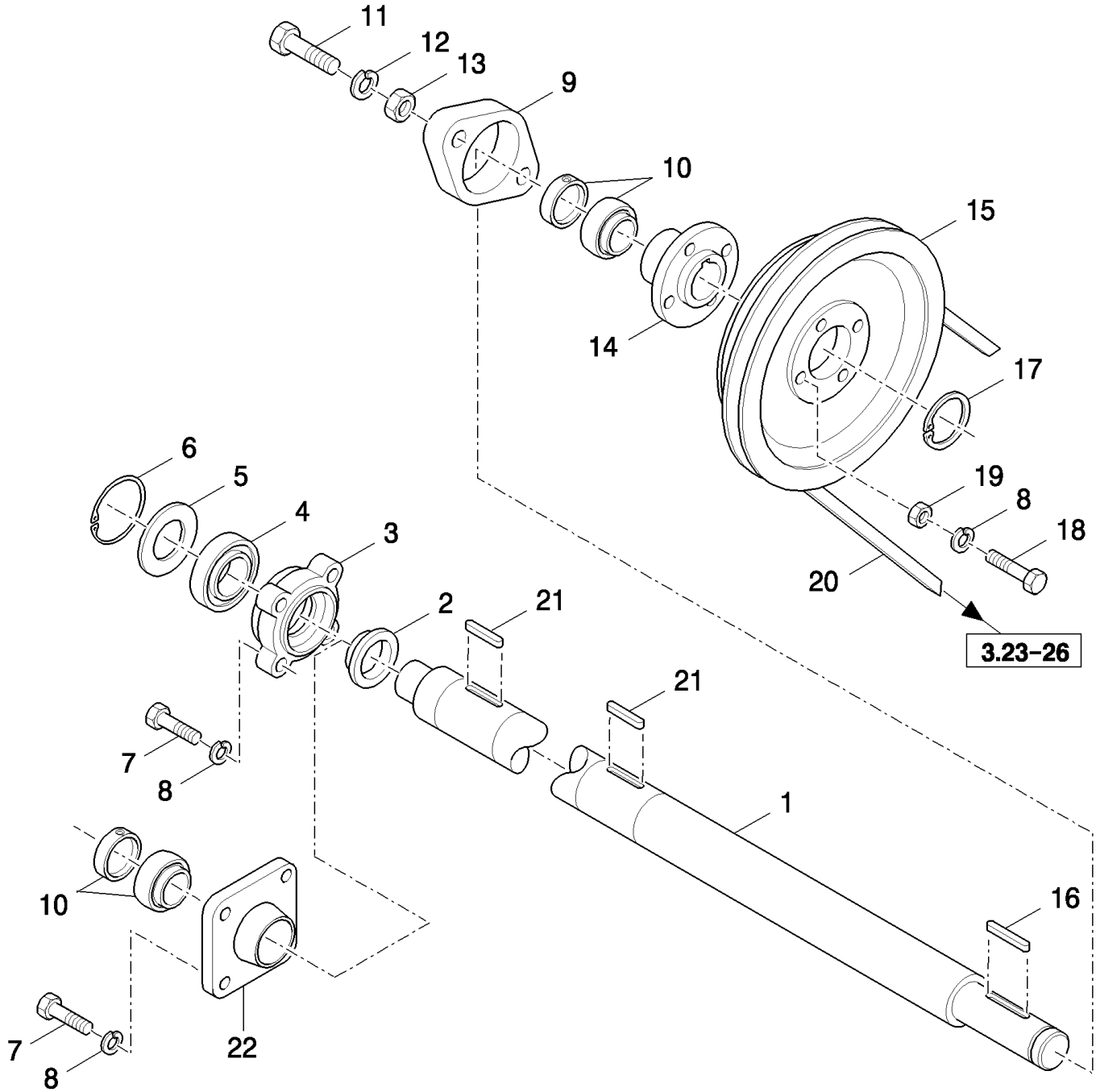

FOR VARIABLE BEATER DRIVE ONLY

TX68 COMBINE - BASE UNIT

03.40(01) ROTARY SEPARATOR DRIVE AND SHAFT

ссылка	Номер детали	Кол-во	Описание
1	84004930	1	SHAFT, , FOR TX66-67-68 ONLY, -C1163
1	84320948	1	SHAFT, , FOR TX66-67-68 ONLY, D1164-
1	84007005	1	SHAFT, , FOR TX62-63-64-65 ONLY, -C1163
1	84320947	1	SHAFT, , FOR TX62-63-64-65 ONLY, D1164-
2	437730	1	RING, , -C1163
3	84814925	1	HOUSING, BEARING, , -C1163
4	210049	1	BEARING ASSY, , -C1163
5	9826298	1	WASHER, , -C1163
6	370013	1	RING, SNAP, M90, Int, , -C1163
7	120112	4	BOLT, Hex, M10 x 40, 8.8, Full Thd,
8	140045	8	WASHER, SPRING, Belleville, M10,
9	444008	1	HOUSING, BEARING,
10	455805	1	BEARING, BALL, , -C1163
10	455805	2	BEARING, BALL, , D1164-
11	9628065	2	SCREW, Hex, M12 x 45, 8.8,
12	140046	2	WASHER, Belleville, M12,
13	337475	2	NUT, M12, Cl 10,
14	754582	1	FLANGE,
15	9835949	1	PULLEY,
16	170056	1	KEY,
17	370006	1	RING, SNAP,
18	412217	4	BOLT, Hex, M10 x 55, 8.8, M10x55
19	100016	4	NUT, M10, Cl 8,
20	9850770	1	BELT, , -C4620
20	84015531	1	BELT, TRANSMISSION, , D4620-
21	323624	2	KEY,
22	84037443	1	HOUSING, BEARING, , D1164-

FOR VARIABLE BEATER DRIVE ONLY

03.40A(01) ROTARY SEPARATOR DRIVE AND SHAFT - TX68PLUS

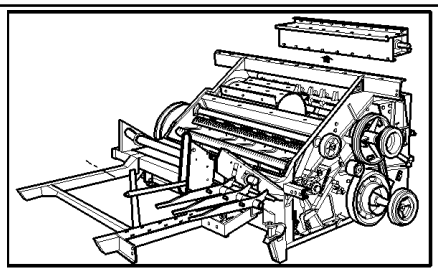

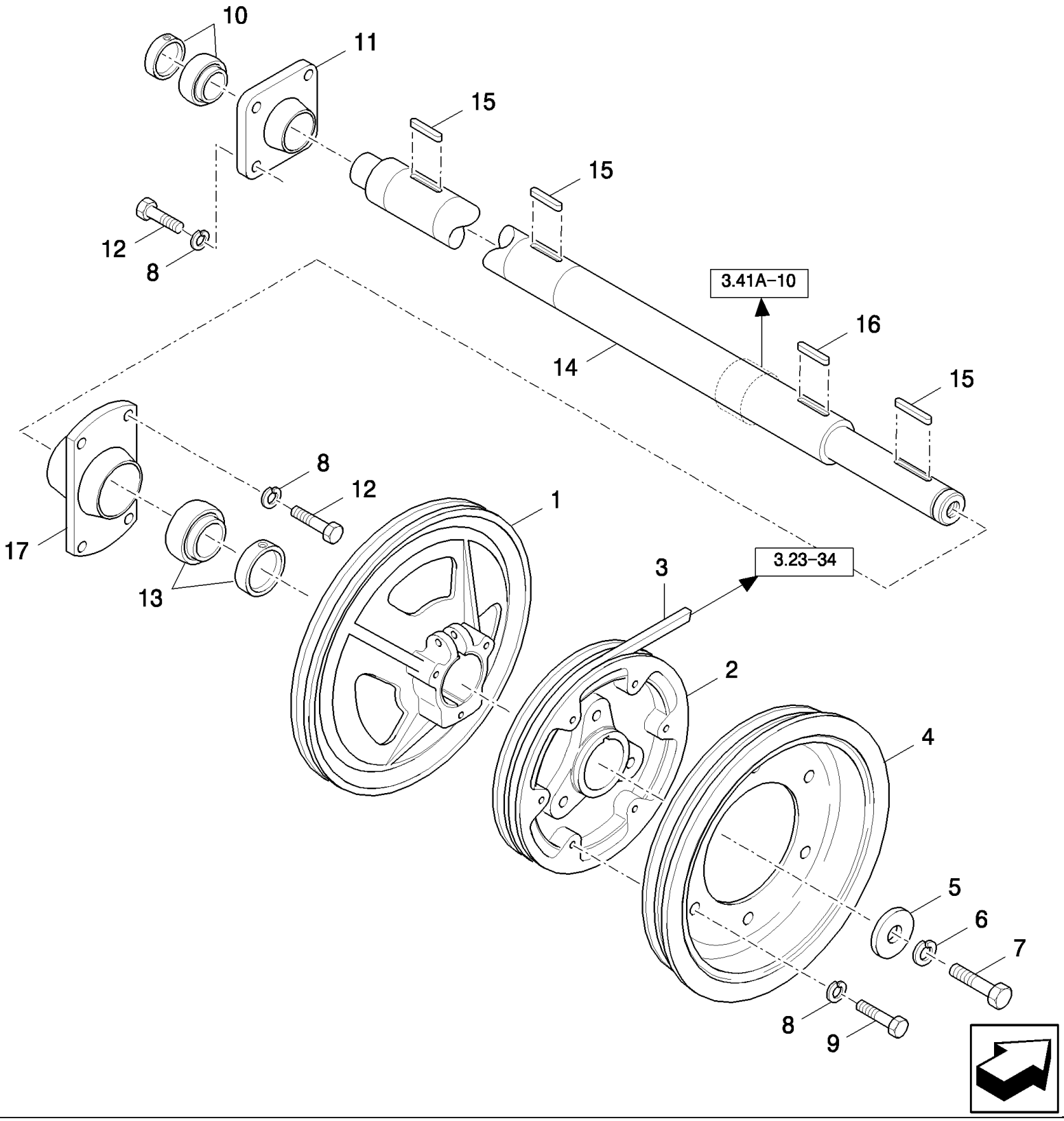

FOR CONSTANT BEATER DRIVE ONLY

TX68 COMBINE - BASE UNIT

03.40A(01) ROTARY SEPARATOR DRIVE AND SHAFT - TX68PLUS

ссылка	Номер детали	Кол-во	Описание
1	84037835	1	PULLEY,
2	84037836	1	PULLEY,
3	84037815	1	BELT, TRANSMISSION,
4	84037834	1	PULLEY,
5	9801067	1	WASHER,
6	140048	2	WASHER, SPRING, Belleville, M16,
7	43168	1	BOLT, Hex, M16 x 40, 8.8,
8	140045	AR	WASHER, SPRING, Belleville, M10,
9	43140	6	BOLT, Hex, M10 x 30, 8.8, Full Thd,
10	455805	1	BEARING, BALL,
11	84037443	1	HOUSING, BEARING,
12	120112	8	BOLT, Hex, M10 x 40, 8.8, Full Thd,
13	84026027	1	BEARING ASSY,
14	84037857	1	SHAFT,
15	323624	3	KEY,
16	170066	1	KEY,
17	84031646	1	HOUSING, BEARING,

FOR CONSTANT BEATER DRIVE ONLY

03.41(01) ROTARY SEPARATOR DRIVE AND SHAFT

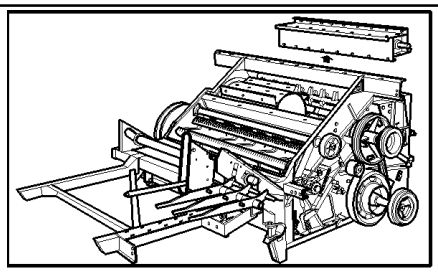

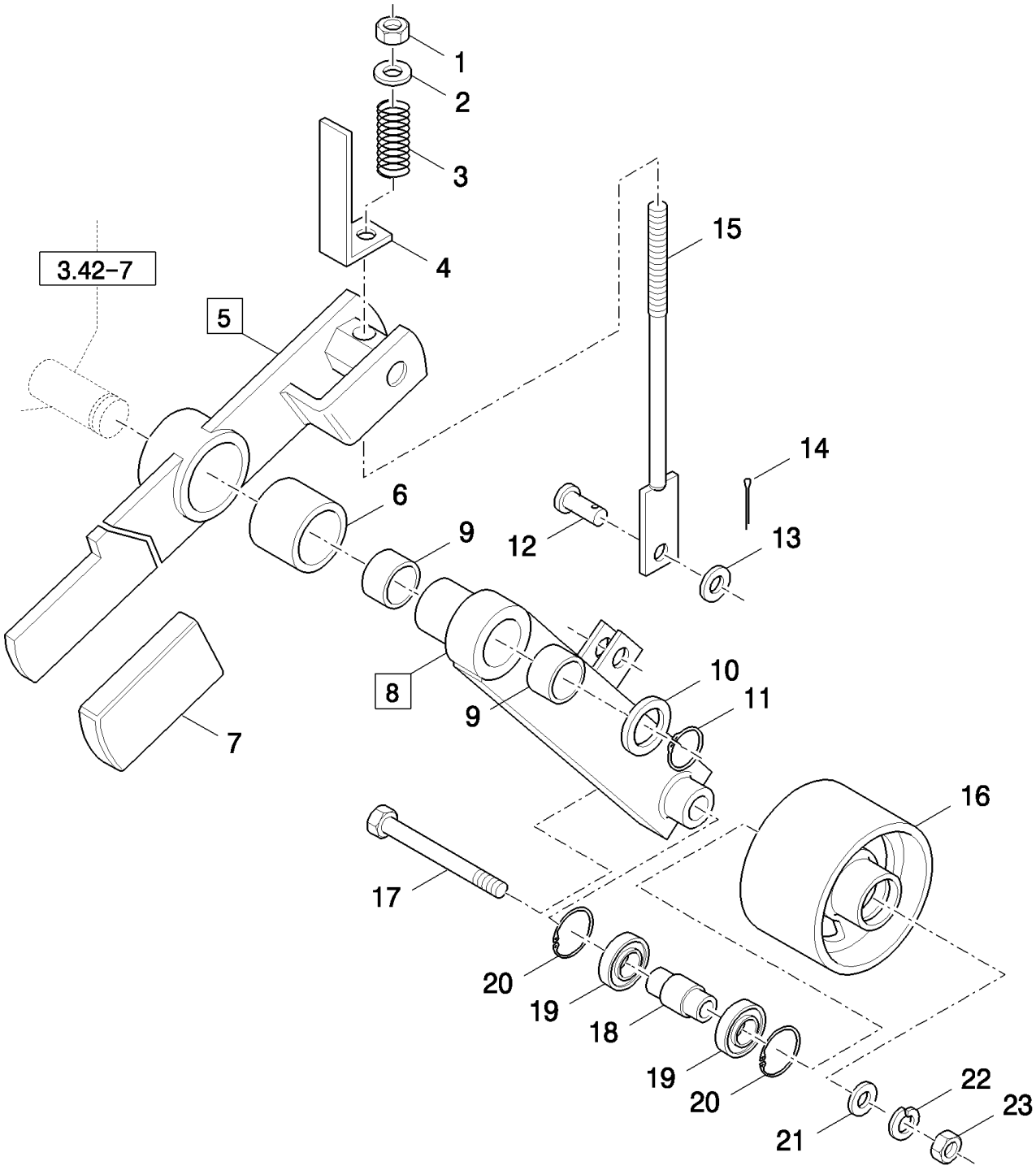

FOR VARIABLE BEATER DRIVE ONLY

TX68 COMBINE - BASE UNIT

03.41(01) ROTARY SEPARATOR DRIVE AND SHAFT

ссылка	Номер детали	Кол-во	Описание
1	412126	1	NUT, LOCK, M12 x 1.75, Cl 8,
2	378245	1	WASHER, M12,
3	392944	1	SPRING,
4	451925	1	INDICATOR,
5	9513959	1	HANDLE, (6)
6	419621	1	BUSHING,
7	357545	1	HANDLE GRIP,
8	9513929	1	LEVER, IDLER, (9)
9	382975	2	SLEEVE,
10	140103	1	WASHER,
11	370002	1	RING, SNAP, M25, Ext,
12	322901	1	PIN,
13	378244	1	WASHER, M10,
14	130003	1	PIN, SPLIT (COTTER), M3.2 x 20,
15	453001	1	ROD, ADJUSTMENT,
16	9513864	1	WHEEL, IDLER,
17	321246	1	BOLT, Hex, M16 x 120, 8.8,
18	9513986	1	BUSHING,
19	443898	2	BEARING, BALL,
20	370011	1	RING, SNAP, M52, Int,
21	140020	1	WASHER, M16 x 30 x 3,
22	86729275	1	WASHER, LOCK, 5/8",
23	100020	1	NUT, M16, Cl 8,

FOR VARIABLE BEATER DRIVE ONLY

03.41A(01) ROTARY SEPARATOR DRIVE AND SHAFT - TX68PLUS

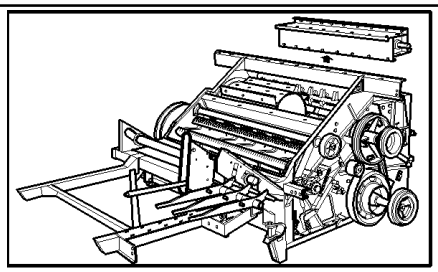

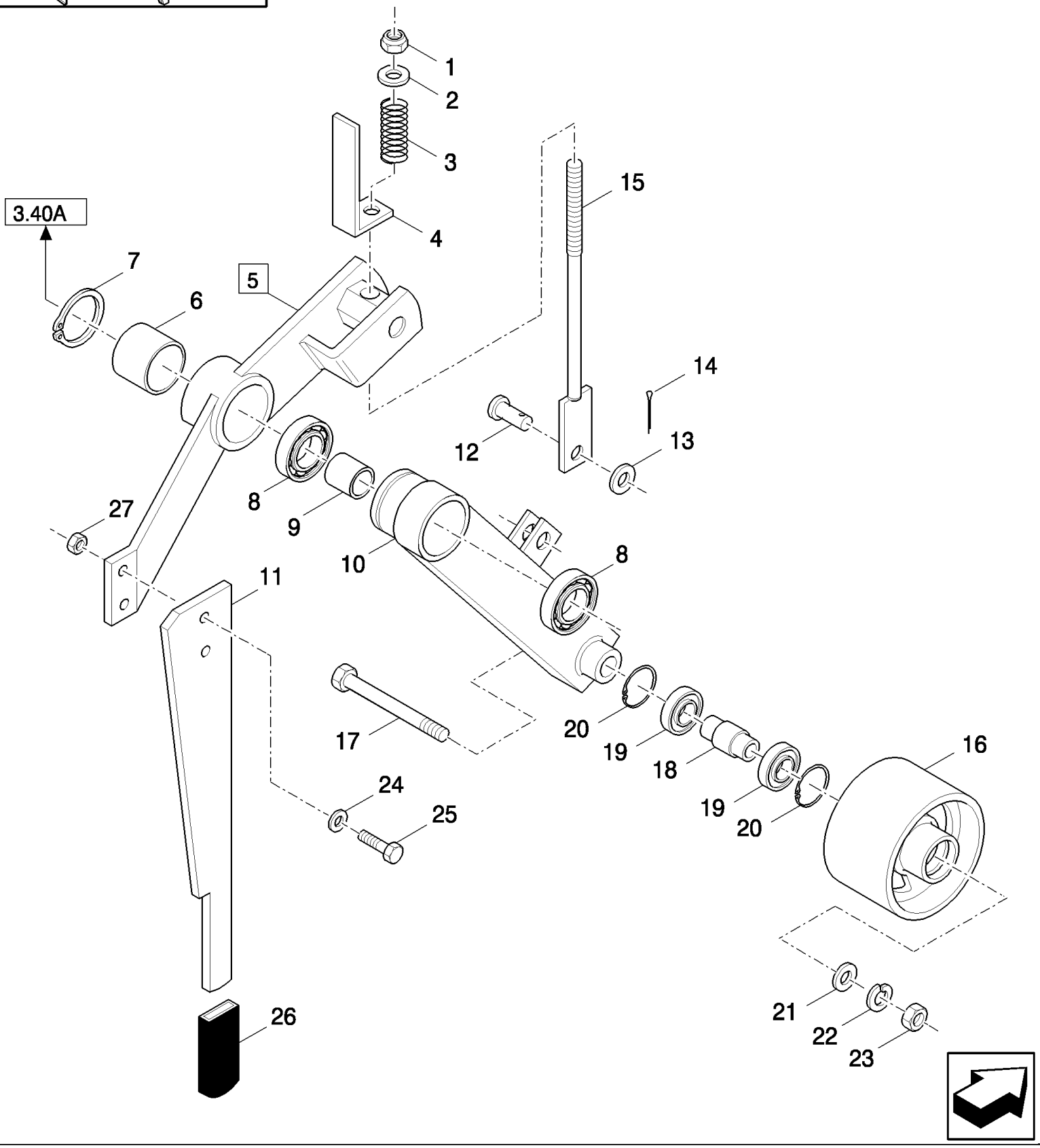

FOR CONSTANT BEATER DRIVE ONLY

TX68 COMBINE - BASE UNIT

03.41A(01) ROTARY SEPARATOR DRIVE AND SHAFT - TX68PLUS

ссылка	Номер детали	Кол-во	Описание
1	412126	1	NUT, LOCK, M12 x 1.75, Cl 8,
2	378245	1	WASHER, M12,
3	392944	1	SPRING,
4	84041325	1	INDICATOR,
5	84037956	1	LEVER, (6)
6	84037775	1	BUSHING,
7	300639	1	RING, SNAP, M90, Ext,
8	412273	2	BEARING ASSY,
9	84038007	1	BUSHING,
10	84057809	1	LEVER, IDLER,
11	84057827	1	HANDLE,
12	322901	1	PIN,
13	378244	1	WASHER, M10,
14	130003	1	PIN, SPLIT (COTTER), M3.2 x 20,
15	455412	1	ROD, ADJUSTMENT,
16	84037732	1	WHEEL, IDLER,
17	362573	1	BOLT, Hex, M16 x 150, 8.8,
18	9819056	1	BUSHING,
19	443898	2	BEARING, BALL,
20	370011	2	RING, SNAP, M52, Int,
21	140020	1	WASHER, M16 x 30 x 3,
22	140048	1	WASHER, SPRING, Belleville, M16,
23	100020	1	NUT, M16, Cl 8,
24	140046	1	WASHER, Belleville, M12,
25	300389	2	BOLT, Hex, M12 x 35, 8.8, Full Thd,
26	357545	1	HANDLE GRIP,
27	337475	2	NUT, M12, Cl 10,

FOR CONSTANT BEATER DRIVE ONLY

03.42(01) ROTARY SEPARATOR DRIVE AND SHAFT

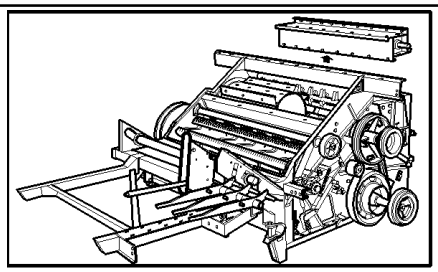

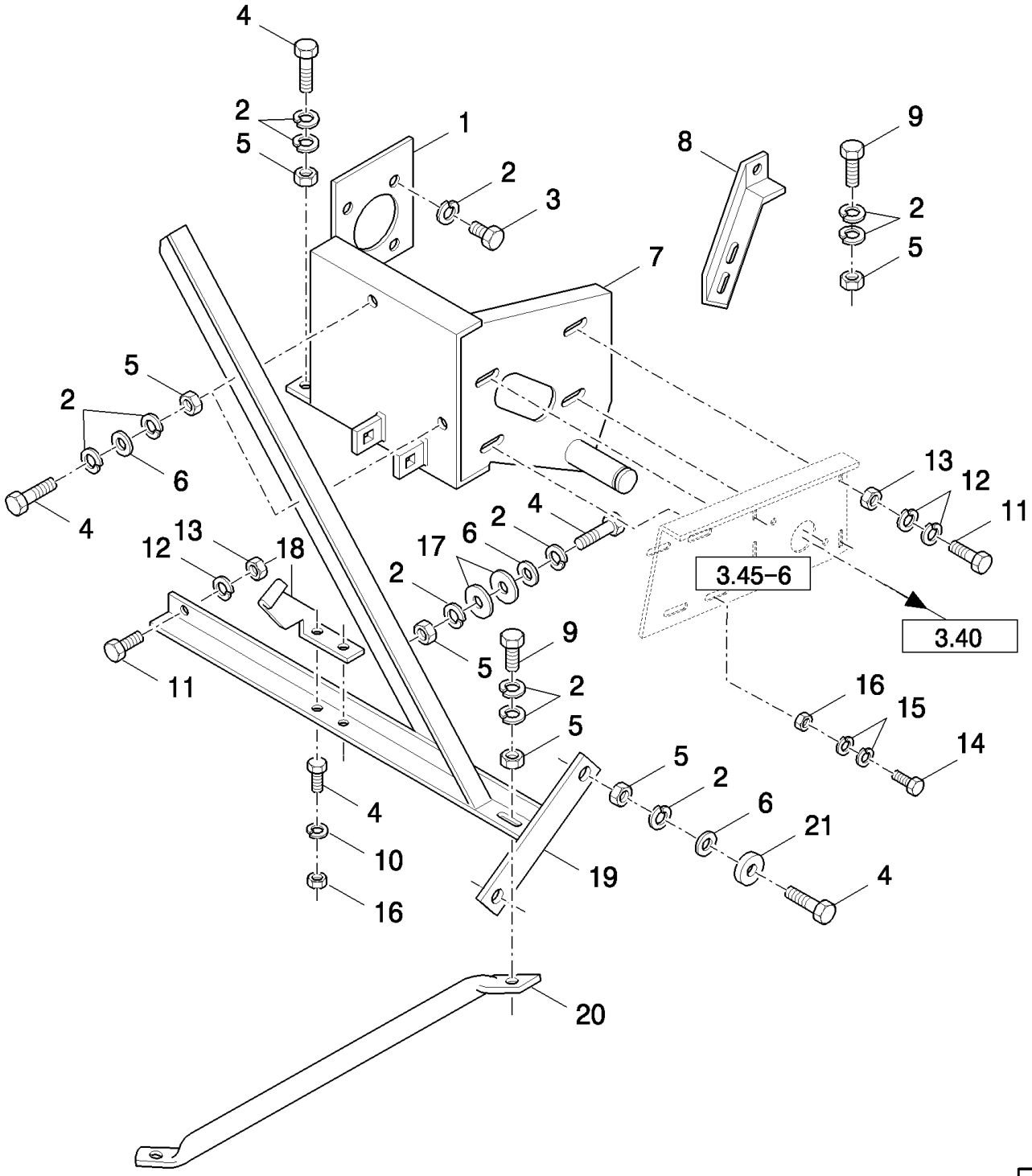

TX68 COMBINE - BASE UNIT

03.42(01) ROTARY SEPARATOR DRIVE AND SHAFT

ссылка	Номер детали	Кол-во	Описание
1	9506243	1	BRACKET, , -C4620
1	84018270	1	PLATE, , D4620-
2	140045	20	WASHER, SPRING, Belleville, M10,
3	300383	4	BOLT, Hex, M10 x 16, 8.8, Full Thd,
4	43140	6	BOLT, Hex, M10 x 30, 8.8, Full Thd,
5	100016	9	NUT, M10, Cl 8,
6	378244	5	WASHER, M10,
7	84000290	1	SUPPORT, , FOR TX66-68 ONLY, -C4620
7	84015739	1	SUPPORT, , FOR TX66-68 ONLY, -C0005
7	84015740	1	SUPPORT, , FOR TX66-67-68 ONLY, D6680-
7	84015740	1	SUPPORT, , FOR TX62-63-64-65 ONLY
8	9818099	1	SUPPORT, , FOR TX66-68 ONLY, -C4620
8	84015845	1	SUPPORT, , FOR TX66-67-68 ONLY, -C0024
8	84015735	1	SUPPORT, , FOR TX66-67-68 ONLY, D7550-
8	84015735	1	SUPPORT, , FOR TX62-63-64-65 ONLY
9	11106231	3	BOLT, Hex, M10 x 25, 10.9, Full Thd,
10	322358	4	WASHER, SPRING, Belleville, M8,
11	9706687	6	SCREW, Hex, M12 x 30, 8.8,
12	140046	6	WASHER, Belleville, M12,
13	337475	6	NUT, M12, Cl 10,
14	120104	3	SCREW, Hex, M8 x 20, 8.8,
15	412650	4	WASHER, Belleville, M8,
16	9706690	3	NUT, M8, Cl 8,
17	80702	AR	WASHER, 3/8",
18	9513988	1	SUPPORT,
18	84057491	1	BRACKET, , FOR TX68PLUS ONLY, FOR CONSTANT BEATER DRIVE ONLY
19	9835710	1	SUPPORT, , FOR TX66-67-68 ONLY
19	84000523	1	SUPPORT, , FOR TX62-63-64-65 ONLY
19	84056925	1	SUPPORT, , FOR CONSTANT BEATER DRIVE ONLY, FOR TX68PLUS ONLY
20	84000084	1	SUPPORT,
21	140042	2	WASHER, M10 x 34 x 3,

03.43(01) "STRAW FLOW" BEATER, DRUM

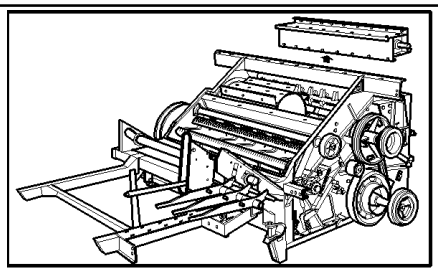

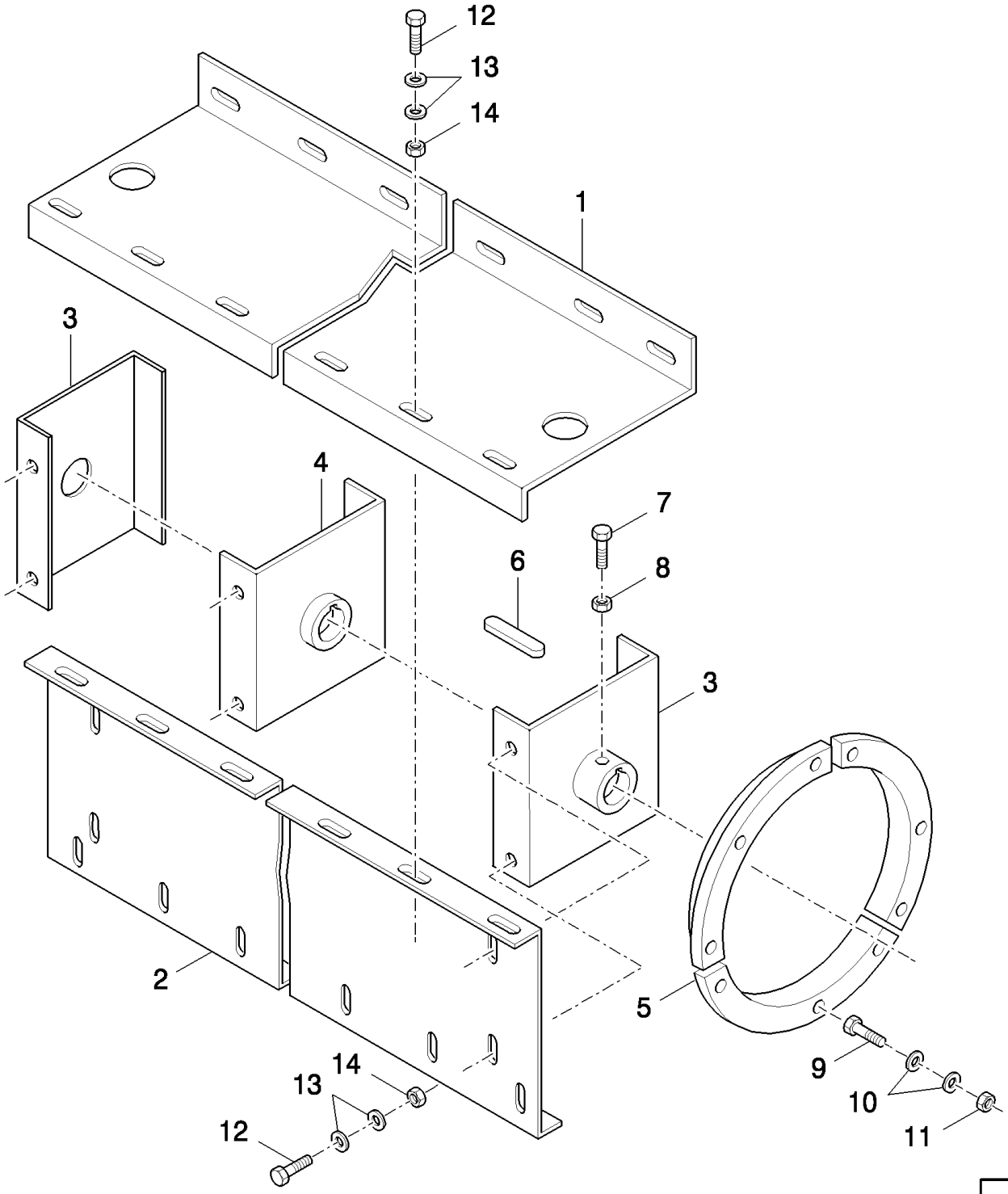

TX68 COMBINE - BASE UNIT

03.43(01) "STRAW FLOW" BEATER, DRUM

ссылка	Номер детали	Кол-во	Описание
1	9835919	2	PLATE, , FOR TX66-68 ONLY, -C5660
1	84021097	2	PLATE, , FOR TX66-67-68 ONLY, D5660-
1	84018101	2	COVER, , FOR TX62-63-64-65 ONLY
2	9835918	2	PLATE, , FOR TX66-68 ONLY, -C5660
2	84021096	2	PLATE, , FOR TX66-67-68 ONLY, D5660-
2	84018102	2	COVER, , FOR TX62-63-64-65 ONLY
3	9835924	2	FLANGE,
4	9835925	1	FLANGE,
5	84015080	6	PROFILE,
6	170012	2	KEY,
7	43140	2	BOLT, Hex, M10 x 30, 8.8, Full Thd,
8	320648	2	NUT, M10, Cl 8, M10
9	80120099	18	BOLT, Hex, M6 x 16, 8.8,
10	412649	36	WASHER, SPRING, Belleville, M6,
11	15896221	AR	NUT, M6, Cl 10,
12	120104	AR	SCREW, Hex, M8 x 20, 8.8, M10x20
13	412650	AR	WASHER, Belleville, M8, 10MM
14	9706690	AR	NUT, M8, Cl 8, M10

03.44(01) "STRAW FLOW" BEATER, DRIVE

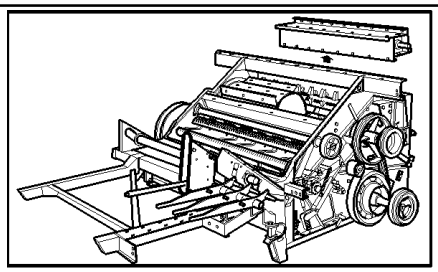

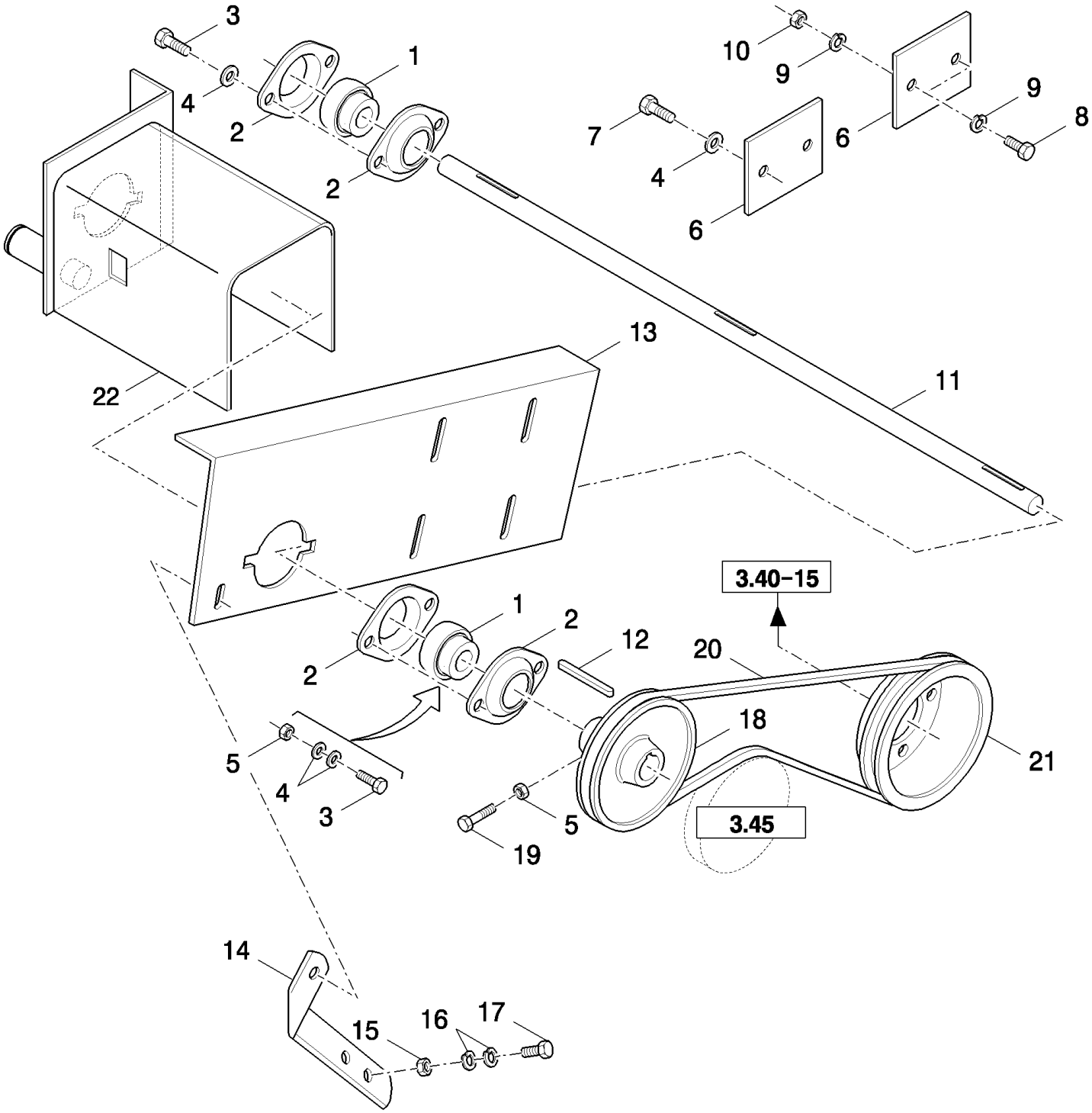

TX68 COMBINE - BASE UNIT

03.44(01) "STRAW FLOW" BEATER, DRIVE

ссылка	Номер детали	Кол-во	Описание
1	212606	2	BEARING ASSY,
2	136978	4	FLANGE,
3	43138	4	SCREW, Hex, M10 x 20, 8.8, Full Thd,
4	140045	AR	WASHER, SPRING, Belleville, M10,
5	100016	3	NUT, M10, Cl 8,
6	9850854	2	PLATE, , WITHOUT "STRAW FLOW" BEATER
7	300383	2	BOLT, Hex, M10 x 16, 8.8, Full Thd, , WITHOUT "STRAW FLOW" BEATER
8	80120099	2	BOLT, Hex, M6 x 16, 8.8, , WITHOUT "STRAW FLOW" BEATER
9	412649	4	WASHER, SPRING, Belleville, M6, , WITHOUT "STRAW FLOW" BEATER
10	15896221	2	NUT, M6, Cl 10, , WITHOUT "STRAW FLOW" BEATER
11	9835952	1	SHAFT, , FOR TX66-67-68 ONLY
11	89835953	1	SHAFT, , FOR TX62-63-64-65 ONLY
12	170012	1	KEY,
13	84000350	1	SUPPORT, , WITH VARIABLE BEATER DRIVE ONLY
14	9839597	1	BRACKET, , WITH VARIABLE BEATER DRIVE ONLY, -C4620
14	84001580	1	BRACKET, , WITH VARIABLE BEATER DRIVE ONLY, D4620-
15	9706690	3	NUT, M8, Cl 8,
16	412650	6	WASHER, Belleville, M8,
17	120104	3	SCREW, Hex, M8 x 20, 8.8,
18	9835959	1	PULLEY,
19	397382	1	SCREW, M10x30
20	84015852	1	BELT, TRANSMISSION,
21	9835947	1	PULLEY, , WITH VARIABLE BEATER DRIVE ONLY
21	84037841	1	PULLEY, , WITH CONSTANT BEATER DRIVE ONLY
22	84057867	1	SUPPORT, , WITH CONSTANT BEATER DRIVE ONLY

03.45(01) "STRAW FLOW" BEATER, IDLER

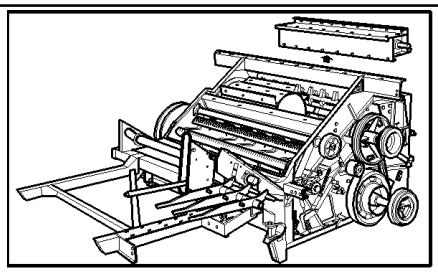

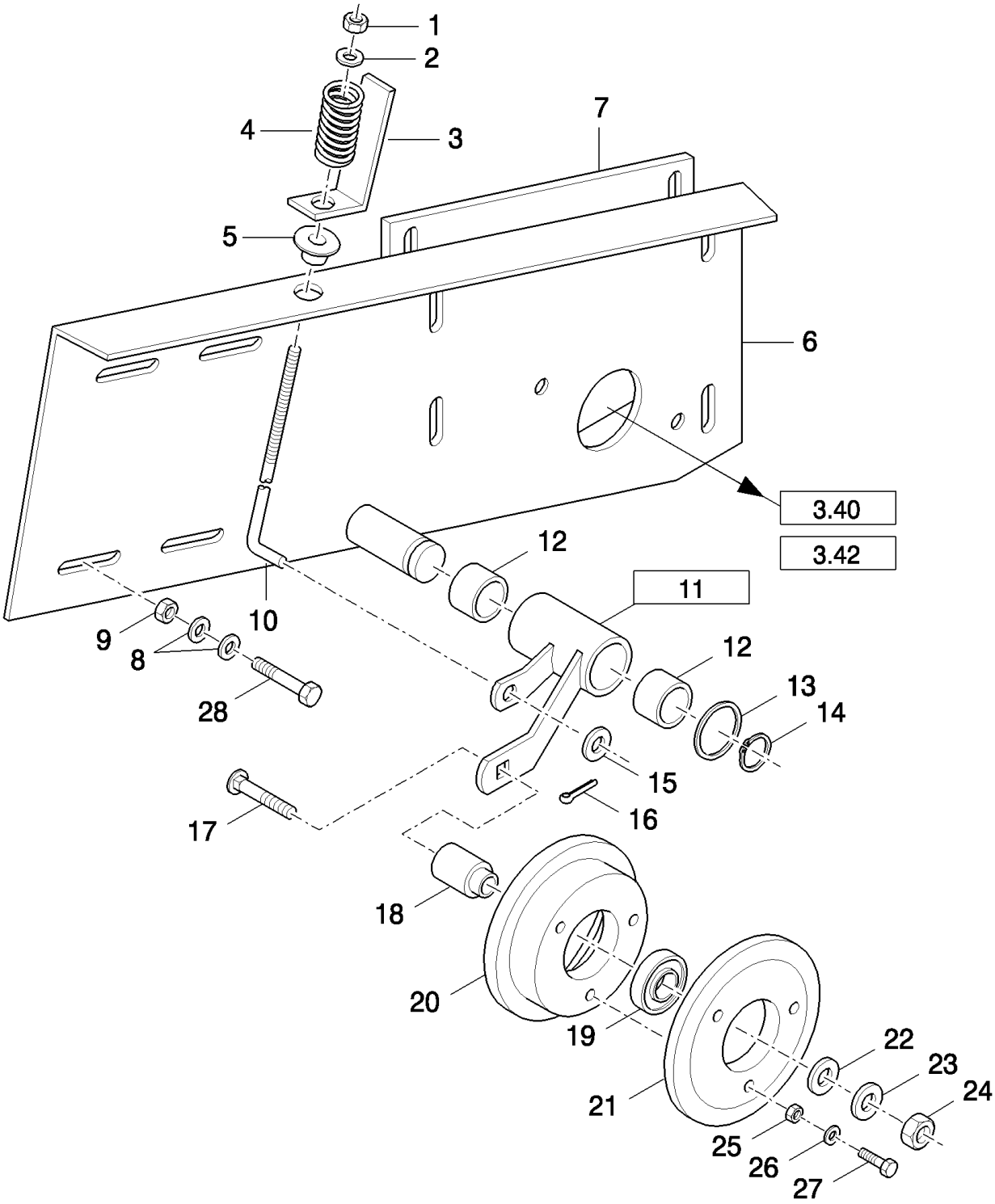

FOR VARIABLE BEATER DRIVE ONLY

TX68 COMBINE - BASE UNIT

03.45(01) "STRAW FLOW" BEATER, IDLER

ссылка	Номер детали	Кол-во	Описание
1	412126	1	NUT, LOCK, M12 x 1.75, Cl 8,
2	378245	1	WASHER, M12,
3	423978	1	INDICATOR, , -C5500
3	84036453	1	INDICATOR, , D5500-
4	308447	1	SPRING,
5	439857	1	BUSHING,
6	9835955	1	SUPPORT, , -C4620
7	84000345	1	PLATE, , -C4620
7	84015737	1	PLATE, , D4620-
8	140046	10	WASHER, Belleville, M12,
9	337475	5	NUT, M12, Cl 10,
10	388629	1	ROD,
11	9835951	1	LEVER, (12)
12	382975	2	SLEEVE,
13	140229	1	WASHER,
14	370002	1	RING, SNAP, M25, Ext,
15	140017	1	WASHER, M10 x 20 x 2,
16	130003	1	PIN, SPLIT (COTTER), M3.2 x 20,
17	120049	1	BOLT, CARRIAGE, Short NK, M16 x 90, Cl8.8,
18	377951	1	BUSHING,
19	443898	1	BEARING, BALL,
20	391081	1	PULLEY,
21	423987	1	HALF-PULLEY,
22	140020	1	WASHER, M16 x 30 x 3,
23	140048	1	WASHER, SPRING, Belleville, M16,
24	100020	1	NUT, M16, Cl 8,
25	80120099	3	BOLT, Hex, M6 x 16, 8.8,
26	412649	3	WASHER, SPRING, Belleville, M6,
27	15896221	3	NUT, M6, Cl 10,
28	300388	5	SCREW, Hex, M12 x 25, 8.8,

FOR VARIABLE BEATER DRIVE ONLY

03.46(01) "STRAW FLOW" BEATER, IDLER - TX68PLUS

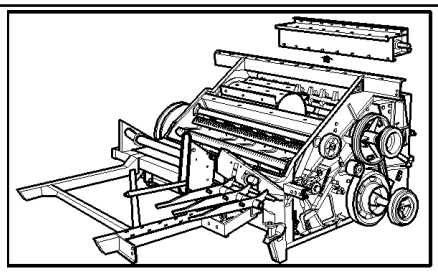

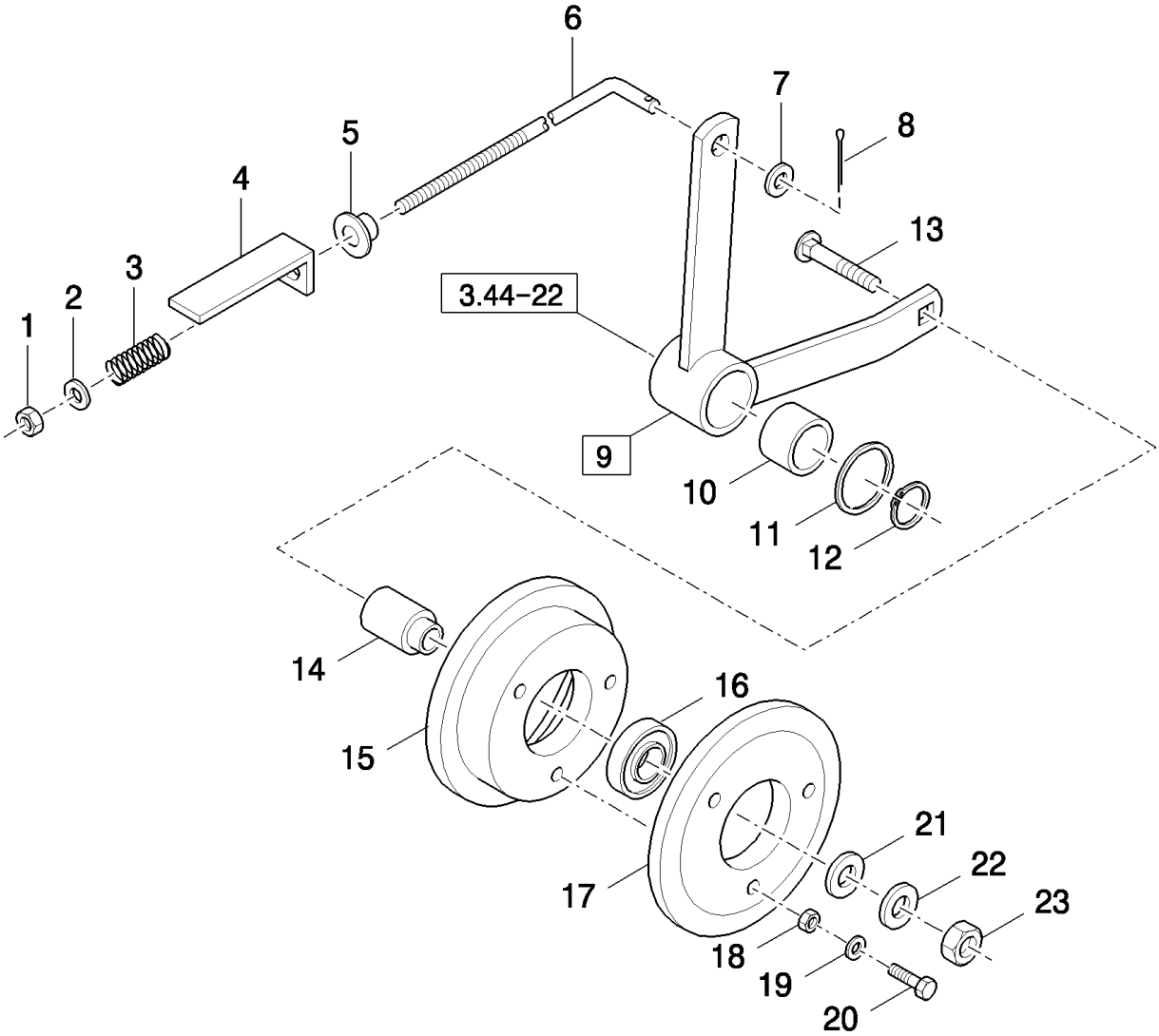

FOR CONSTANT BEATER DRIVE ONLY

TX68 COMBINE - BASE UNIT

03.46(01) "STRAW FLOW" BEATER, IDLER - TX68PLUS

ссылка	Номер детали	Кол-во	Описание
1	412126	1	NUT, LOCK, M12 x 1.75, Cl 8,
2	378245	1	WASHER, M12,
3	308447	1	SPRING,
4	84036453	1	INDICATOR,
5	439857	1	BUSHING,
6	388629	1	ROD,
7	140017	1	WASHER, M10 x 20 x 2,
8	130003	1	PIN, SPLIT (COTTER), M3.2 x 20,
9	84038115	1	LEVER, (10)
10	382975	1	SLEEVE,
11	140103	1	WASHER,
12	370002	1	RING, SNAP, M25, Ext,
13	120049	1	BOLT, CARRIAGE, Short NK, M16 x 90, Cl8.8,
14	377951	1	BUSHING,
15	391081	1	PULLEY,
16	443898	1	BEARING, BALL,
17	423987	1	HALF-PULLEY,
18	15896221	3	NUT, M6, Cl 10,
19	412649	3	WASHER, SPRING, Belleville, M6,
20	80120099	3	BOLT, Hex, M6 x 16, 8.8,
21	140020	1	WASHER, M16 x 30 x 3,
22	140048	1	WASHER, SPRING, Belleville, M16,
23	100020	1	NUT, M16, Cl 8,

FOR CONSTANT BEATER DRIVE ONLY

SECTIONS	**SECTIONS**	**SECCIONES**	**AFSNIT**
SEZIONI	**ABSCHNITTE**	**SECÇÕES**	**SECTIES**

SEC. 4

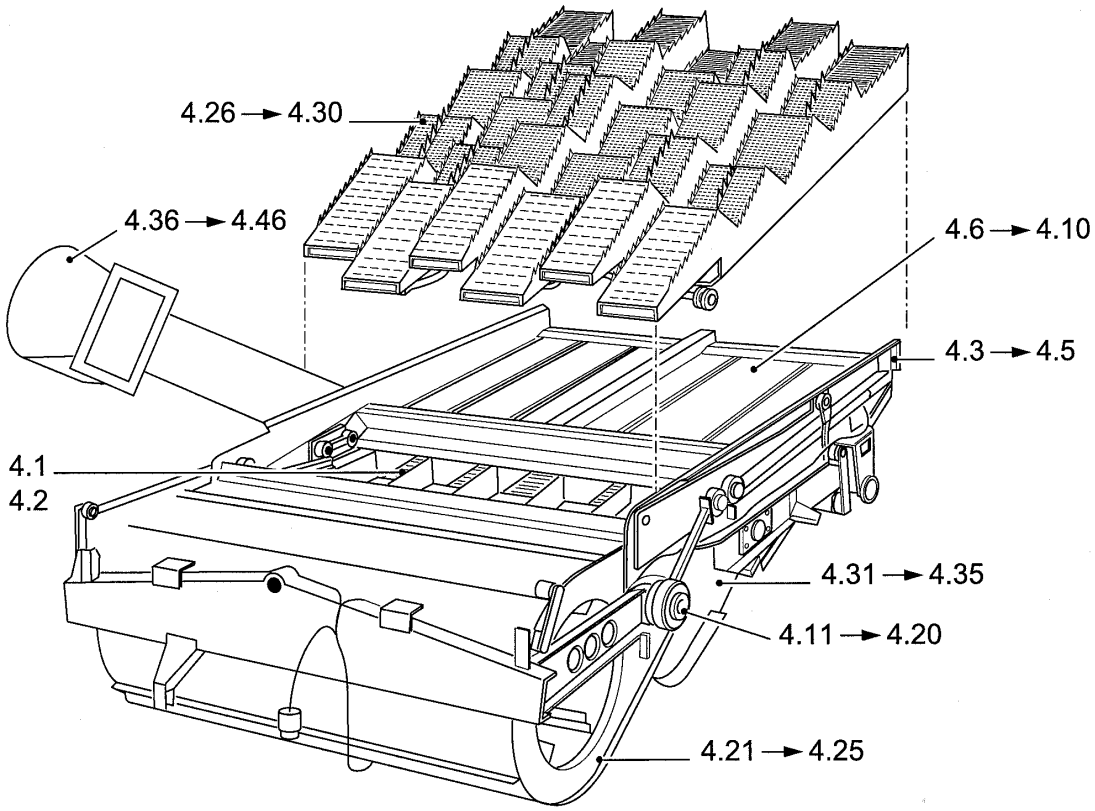

ссылка	Номер детали	Кол-во	Описание

04.01(01) GRAIN PAN

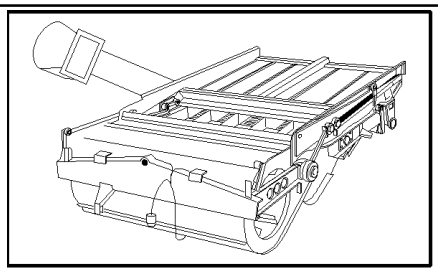

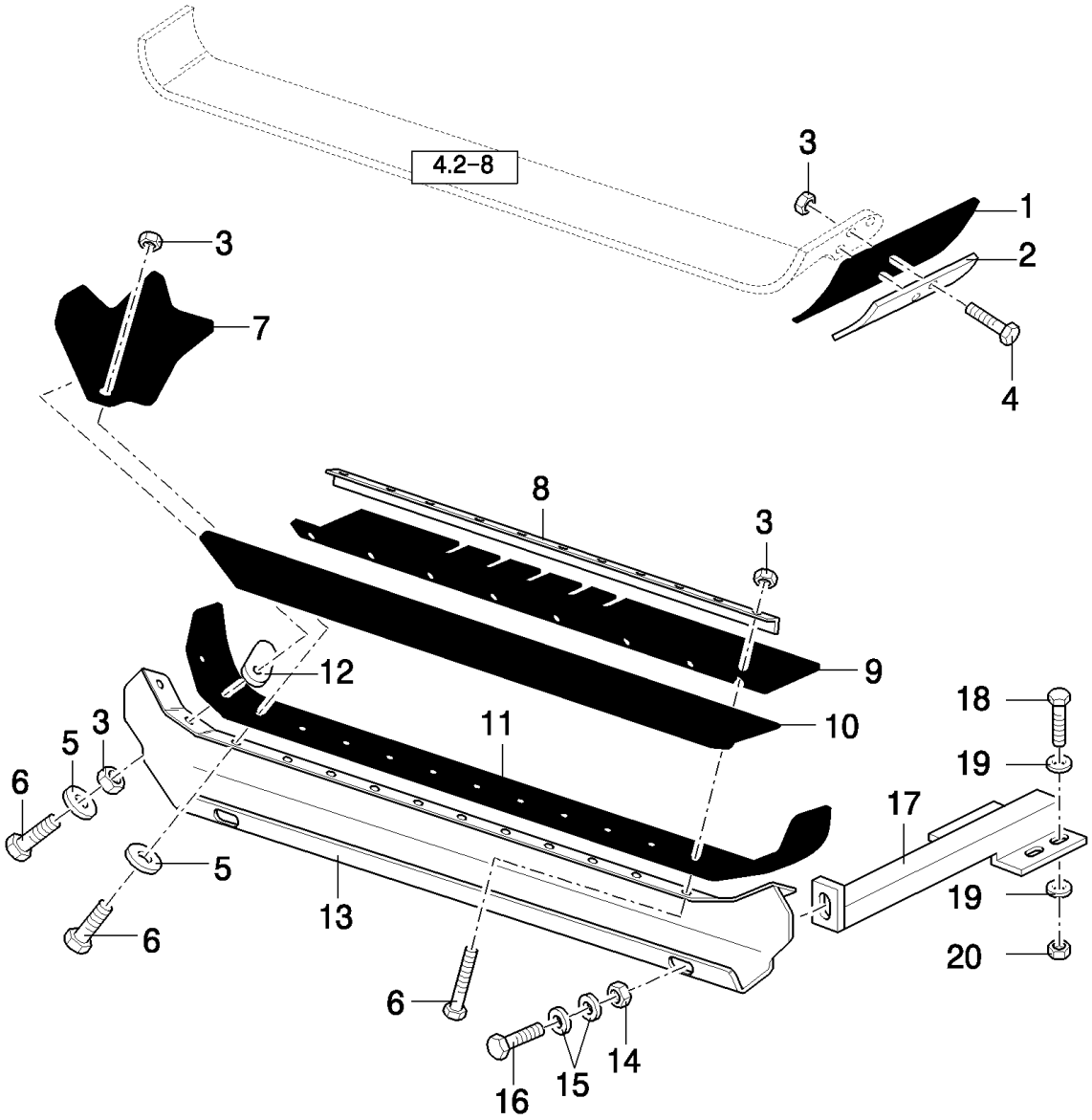

TX68 COMBINE - BASE UNIT

04.01(01) GRAIN PAN

ссылка	Номер детали	Кол-во	Описание
1	84005164	2	SEAL,
2	84005240	2	PLATE,
3	353308	18	NUT, M6 x 1, Cl 8,
4	120100	4	BOLT, Hex, M6 x 20, 8.8,
5	140040	4	WASHER, M6 x 22 x 2,
6	86977786	14	BOLT, Hex, M6 x 25, 8.8,
7	84005166	2	ELEMENT, SEALING,
8	84000704	1	STRIP, , FOR TX66-67-68 ONLY
8	9815946	1	PLATE, FIXING, , FOR TX62-63-64-65 ONLY
9	84012784	1	CANVAS, , FOR TX66-67-68 ONLY
9	84005864	1	CANVAS, , FOR TX62-63-64-65 ONLY
10	84005167	1	SEAL, RUBBER, , FOR TX66-67-68 ONLY, FOR SELF-LEVELLING ONLY
10	84005865	1	STRIP, RUBBER, , FOR SELF-LEVELLING ONLY, FOR TX62-63-64-65 ONLY
11	84005168	1	CANVAS, , FOR TX66-67-68 ONLY, -C1265
11	84440822	1	SEAL, , FOR TX66-67-68 ONLY, D1266-
11	84005866	1	CANVAS, , FOR TX62-63-64-65 ONLY, -C1265
11	84440863	1	CANVAS, , FOR TX62-63-64-65 ONLY, D1266-
12	84007182	2	BRACKET,
13	84005315	1	SUPPORT, , FOR TX66-67-68 ONLY
13	84005868	1	SUPPORT, , FOR TX62-63-64-65 ONLY
14	100016	2	NUT, M10, Cl 8,
15	140045	14	WASHER, SPRING, Belleville, M10,
16	11106231	2	BOLT, Hex, M10 x 25, 10.9, Full Thd,
17	84004847	2	SUPPORT, , FOR SELF-LEVELLING ONLY
18	120104	8	SCREW, Hex, M8 x 20, 8.8, , FOR SELF-LEVELLING ONLY
19	322358	16	WASHER, SPRING, Belleville, M8, , FOR SELF-LEVELLING ONLY
20	9706690	8	NUT, M8, Cl 8, , FOR SELF-LEVELLING ONLY

04.02(01) GRAIN PAN

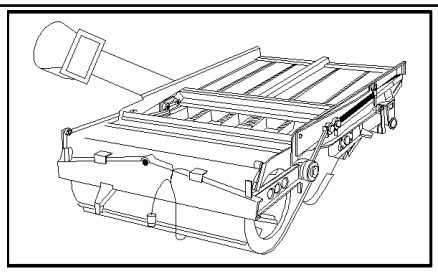

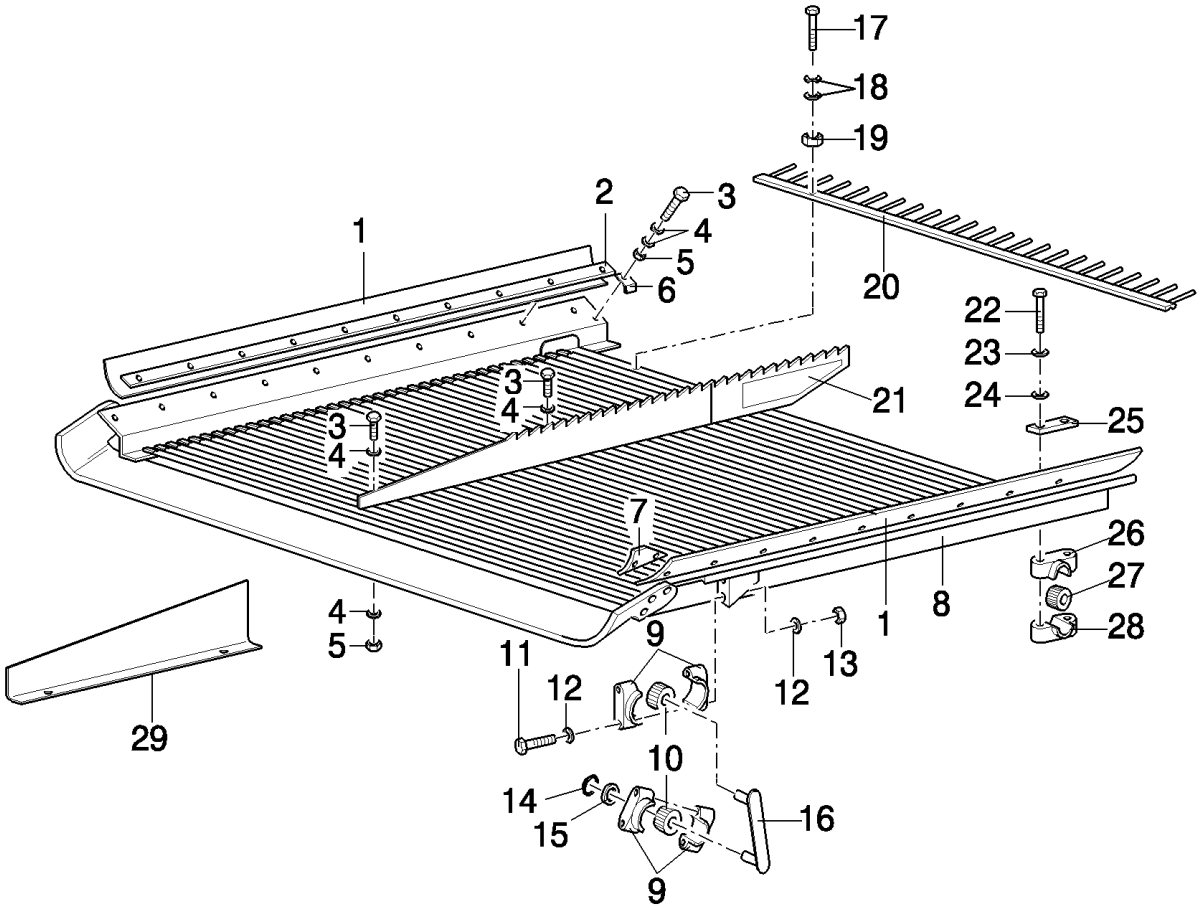

TX68 COMBINE - BASE UNIT

04.02(01) GRAIN PAN

ссылка	Номер детали	Кол-во	Описание
1	84004038	2	CANVAS,
2	394532	2	STRIP,
3	80120099	22	BOLT, Hex, M6 x 16, 8.8,
4	322357	44	WASHER, SPRING, Belleville, M6,
5	15896221	22	NUT, M6, Cl 10,
6	429635	2	SUPPORT,
7	84005165	2	PLATE, COVER,
8	9832155	1	SHOE, SHAKER, , FOR TX66-67-68 ONLY
8	9831614	1	SHOE, SHAKER, , FOR TX62-63-64-65 ONLY
9	320033	8	HOUSING,
10	84000052	4	BUSHING, RUBBER,
11	120062	8	BOLT, Hex, M8 x 70, 8.8,
12	322358	12	WASHER, SPRING, Belleville, M8,
13	86629542	8	NUT, LOCK, M8 x 1.25, Cl 8,
14	300627	4	RING, SNAP, M19, Ext,
15	84032520	4	WASHER, 20MM
16	9832412	2	ARM, , FOR SELF-LEVELLING ONLY
16	9832411	2	ARM, , FOR FIXED SHOE ONLY
17	120100	8	BOLT, Hex, M6 x 20, 8.8,
18	412618	16	WASHER, 6MM
19	353308	8	NUT, M6 x 1, Cl 8,
20	84012786	1	RAKE, , FOR TX66-67-68 ONLY
20	84005806	1	RAKE, , FOR TX62-64-65 ONLY
21	922627	5	CAM, , FOR TX66-67-68 ONLY, FOR BLOCKED FRAME ONLY
21	922627	4	CAM, , FOR TX62-63-64-65 ONLY, FOR FIXED SHOE ONLY
21	428185	2	RAKE, , FOR SELF-LEVELLING ONLY
22	120073	4	BOLT, Hex, M10 x 80, 8.8,
23	140045	4	WASHER, SPRING, Belleville, M10,
24	378244	4	WASHER, M10,
25	9839299	2	SHIM,
26	387449	2	HALF-FLANGE,
27	338222	2	BUSHING, RUBBER,
28	9510495	2	HOUSING,
29	430252	5	DIVIDER, , FOR TX66-67-68 ONLY
29	430252	4	DIVIDER, , FOR TX62-63-64-65 ONLY

04.03(01) SHAKER SHOE

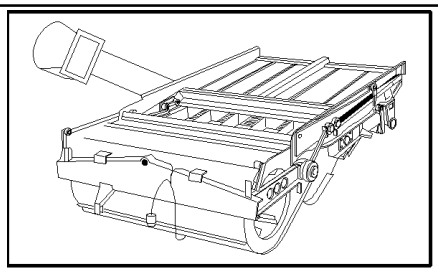

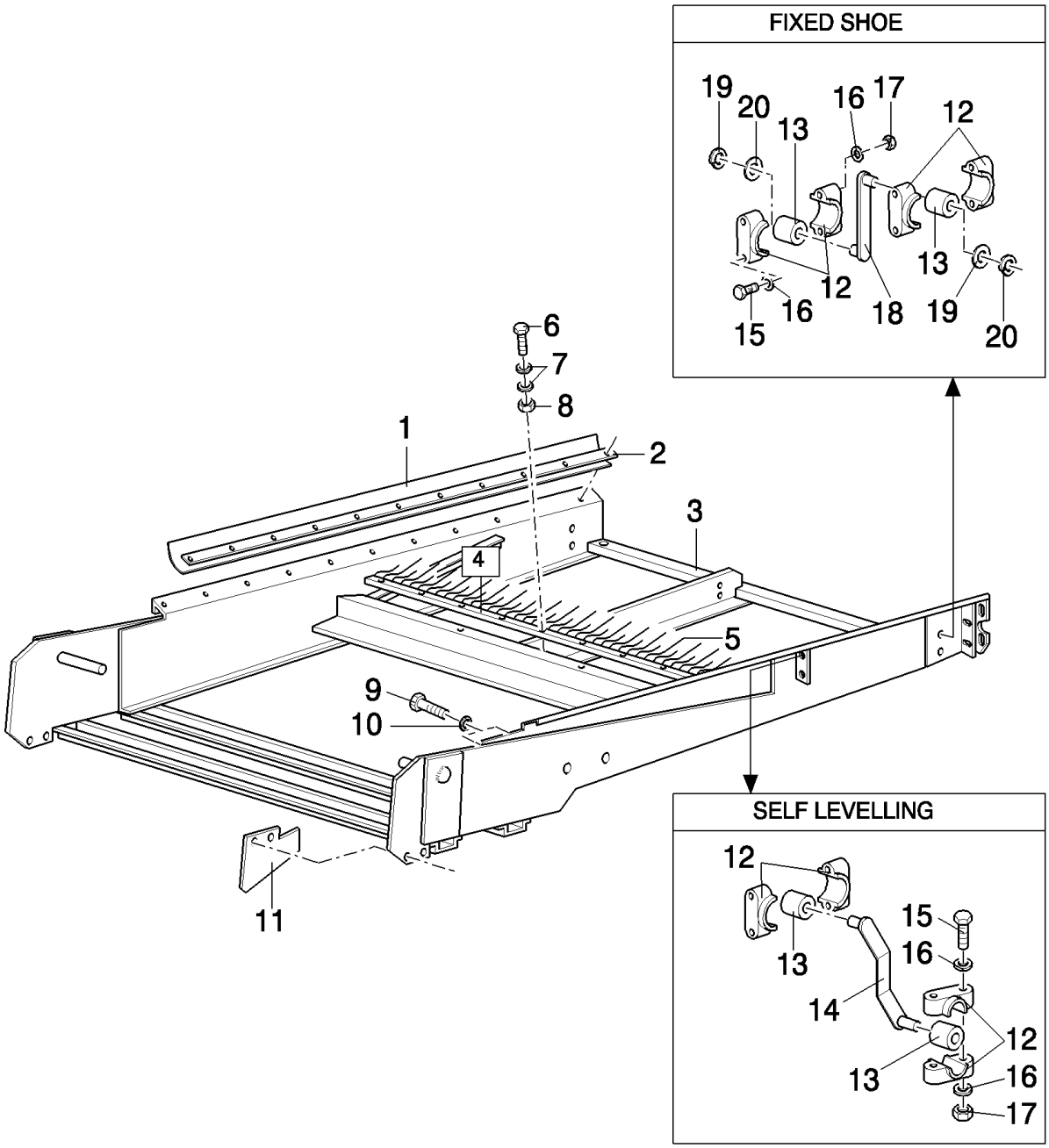

TX68 COMBINE - BASE UNIT

04.03(01) SHAKER SHOE

ссылка	Номер детали	Кол-во	Описание
1	428603	2	CANVAS,
2	428602	2	STRIP,
3	451689	1	SHOE, SHAKER, , FOR TX66-68 ONLY
3	919897	1	SHOE, SHAKER, , FOR TX62-63-64-65 ONLY
4	452392	1	RAKE, (5), FOR TX66-67-68 ONLY
4	428587	1	RAKE, (5), FOR TX62-63-64-65 ONLY
5	399827	AR	TOOTH, RICE,
6	86977786	8	BOLT, Hex, M6 x 25, 8.8,
7	412618	16	WASHER, 6MM
8	353308	8	NUT, M6 x 1, Cl 8,
9	120091	4	BOLT, Hex, M16 x 60, 8.8,
10	394631	4	WASHER, 17MM
11	84062360	2	PLATE, , FOR SELF-LEVELLING ONLY
11	9832293	2	PLATE, , FOR FIXED SHOE ONLY
12	320033	8	HOUSING,
13	84000052	4	BUSHING, RUBBER,
14	84000049	2	ARM, , FOR SELF-LEVELLING ONLY, FOR TX62-63-64-65 ONLY
14	84000049	2	ARM, , FOR SELF-LEVELLING ONLY, FOR TX66-68 ONLY, -C4540
14	84021477	2	ARM, , FOR SELF-LEVELLING ONLY, FOR TX66-67-68 ONLY, D4540-
15	120062	8	BOLT, Hex, M8 x 70, 8.8,
16	322358	12	WASHER, SPRING, Belleville, M8,
17	86629542	8	NUT, LOCK, M8 x 1.25, Cl 8,
18	9832411	2	ARM,
19	300627	4	RING, SNAP, M19, Ext,
20	84032520	4	WASHER,

04.04(01) SHAKER SHOE

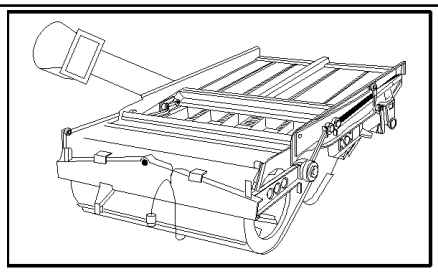

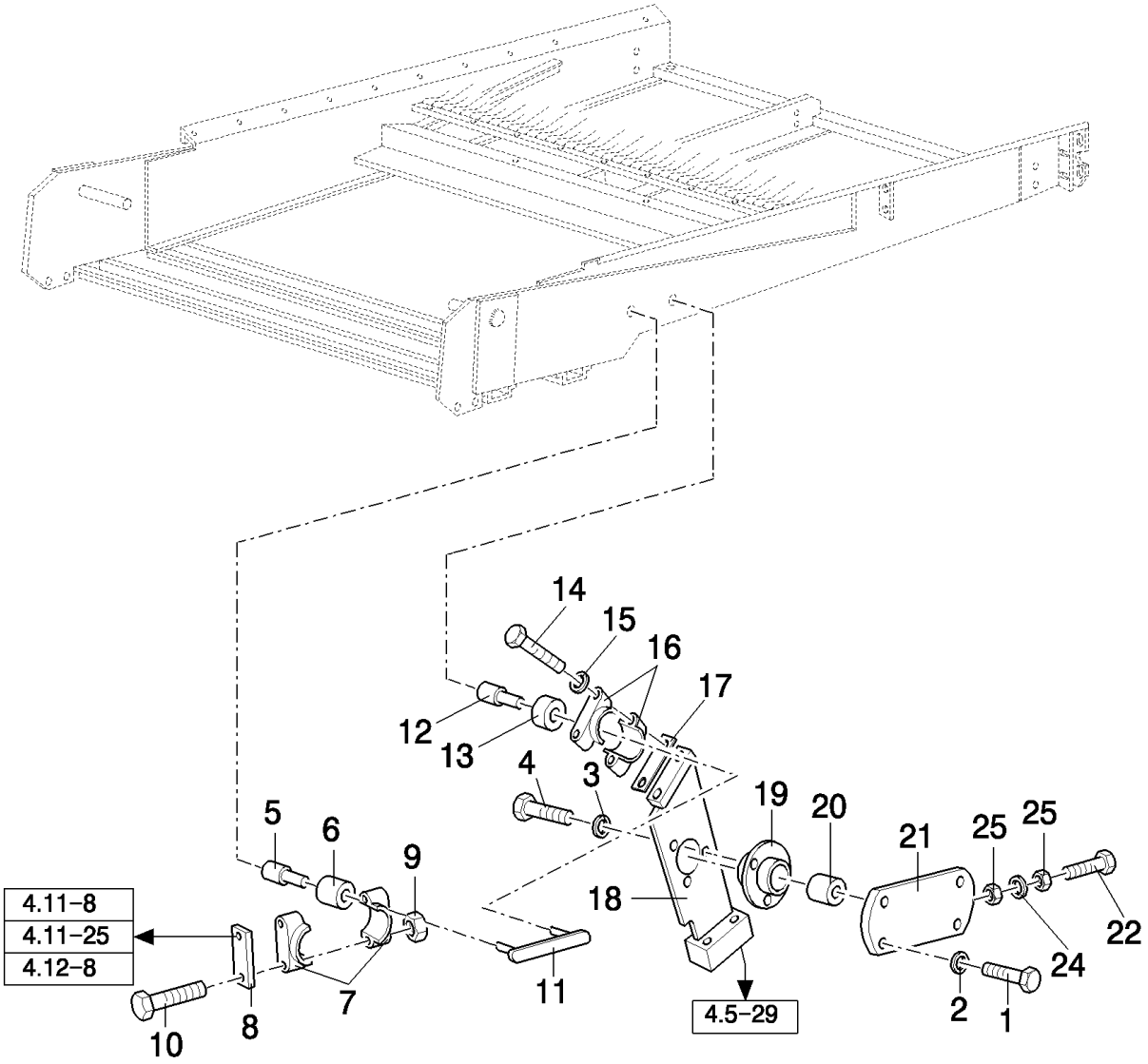

TX68 COMBINE - BASE UNIT

04.04(01) SHAKER SHOE

ссылка	Номер детали	Кол-во	Описание
1	86629541	8	BOLT, Hex, M12 x 40, 8.8, Full Thd,
2	140046	8	WASHER, Belleville, M12,
3	140045	6	WASHER, SPRING, Belleville, M10,
4	120201	6	BOLT, Hex, M10 x 35, 8.8, Full Thd,
5	452393	2	SHAFT, , FOR SELF-LEVELLING ONLY
5	919638	2	SHAFT, , FOR FIXED SHOE ONLY
6	84000053	2	BUSHING, RUBBER,
7	444596	4	HOUSING,
8	445472	AR	PLATE, ADJUSTING,
8	445473	AR	SHIM, THK.:1MM
8	445474	AR	SHIM, THK.:0.5MM
9	100038	4	NUT, M12 x 1.75, Cl 8,
10	9501756	4	BOLT, Hex, M12 x 110, 10.9,
11	919636	2	PLATE,
12	84037184	2	SHAFT, , FOR SELF-LEVELLING ONLY
12	919637	2	SHAFT, , FOR FIXED SHOE ONLY
13	80442446	2	BUSHING, RUBBER,
14	86508581	4	BOLT, Hex, M12 x 90, 8.8,
15	394630	4	WASHER, 13MM
16	84032313	4	HOUSING, BEARING, , -C1315
16	84446877	4	HOUSING, BEARING, , D1316-
17	446760	AR	SHIM, 0.2mm Thk, , -C1065
18	9832702	1	ARM, RH
18	9832701	1	ARM, LH
19	9811082	1	BUSHING,
20	80442446	2	BUSHING, RUBBER,
21	9811085	1	HOUSING, BEARING, LH, FOR SELF-LEVELLING ONLY
21	9811086	1	HOUSING, BEARING, RH, FOR SELF-LEVELLING ONLY
21	9811085	2	HOUSING, BEARING, , FOR FIXED SHOE ONLY
22	86977775	1	BOLT, Hex, M10 x 60, 8.8, Full Thd,
23	320648	1	NUT, M10, Cl 8,
24	378244	2	WASHER, M10,
25	100016	1	NUT, M10, Cl 8,

04.05(01) SHAKER SHOE

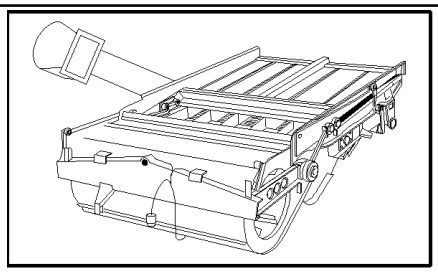

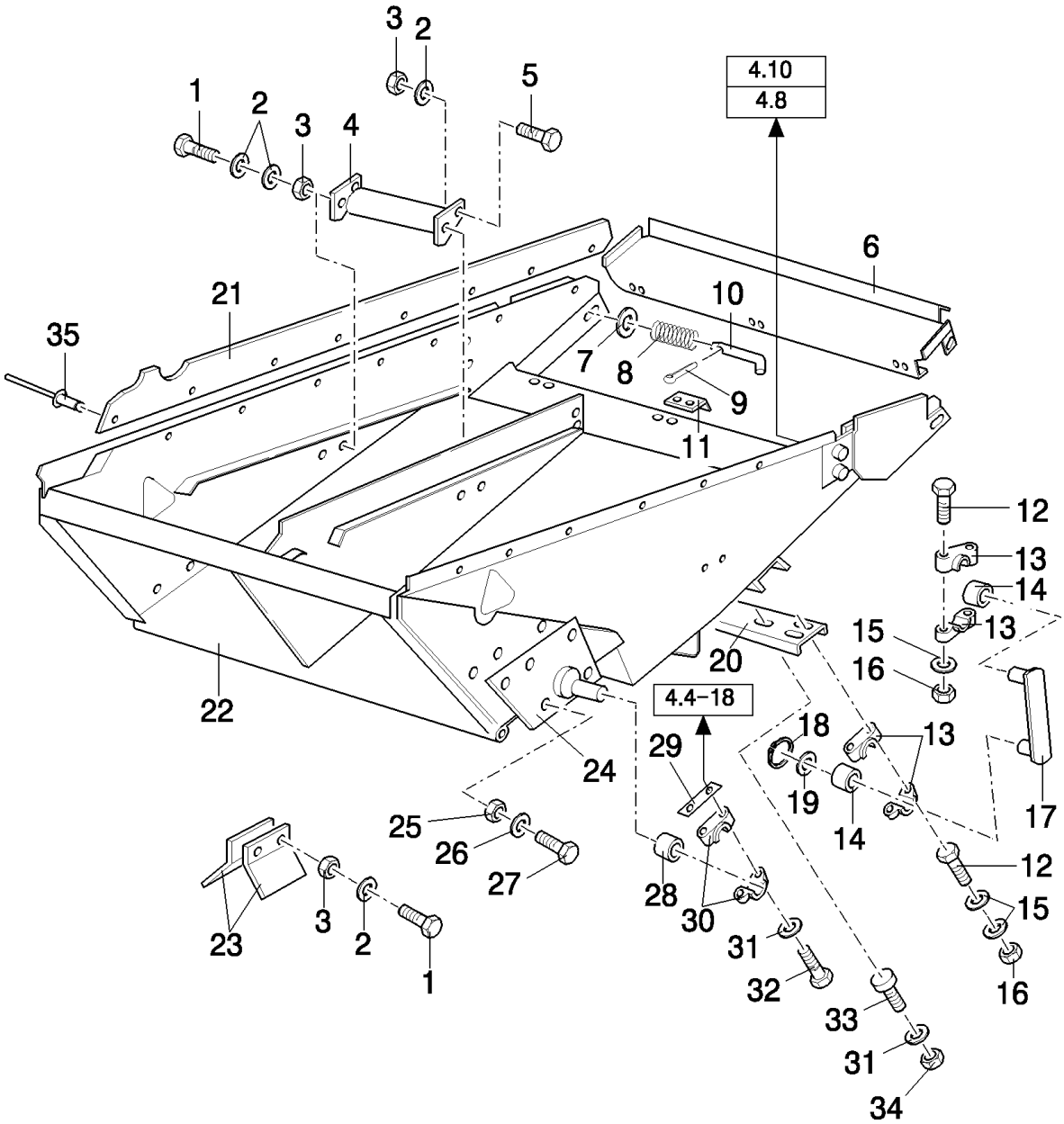

TX68 COMBINE - BASE UNIT

04.05(01) SHAKER SHOE

ссылка	Номер детали	Кол-во	Описание
1	80120099	6	BOLT, Hex, M6 x 16, 8.8,
2	322357	12	WASHER, SPRING, Belleville, M6,
3	15896221	8	NUT, M6, Cl 10,
4	9514057	2	PROFILE, , FOR TX66-67-68 ONLY
4	89514246	1	PROFILE, , FOR TX62-63-64-65 ONLY
5	120100	2	BOLT, Hex, M6 x 20, 8.8,
6	452398	1	COVER, , FOR TX66-67-68 ONLY
6	80428499	1	COVER, , FOR TX62-63-64-65 ONLY
7	140223	2	WASHER, 13MM
8	84814911	2	SPRING,
9	130003	2	PIN, SPLIT (COTTER), M3.2 x 20,
10	394549	2	HANDLE,
11	350083	3	HINGE,
12	120062	8	BOLT, Hex, M8 x 70, 8.8,
13	320033	8	HOUSING,
14	84000052	4	BUSHING, RUBBER,
15	322358	18	WASHER, SPRING, Belleville, M8,
16	86629542	8	NUT, LOCK, M8 x 1.25, Cl 8,
17	9832413	2	ARM, , FOR SELF-LEVELLING ONLY, -C1265
17	84438529	2	ARM, , FOR SELF-LEVELLING ONLY, D1266-
17	9832410	2	ARM, , FOR FIXED SHOE ONLY, -C5550
17	84022659	2	ARM, , FOR FIXED SHOE ONLY, D5550-
18	300627	4	RING, SNAP, M19, Ext,
19	84032520	4	WASHER, 20MM
20	747826	2	SUPPORT,
21	428605	2	CANVAS,
22	452053	1	SHOE, SHAKER, , FOR TX66-67-68 ONLY
22	919898	1	SHOE, SHAKER, , FOR TX62-63-64-65 ONLY
23	84012802	2	PLATE, , FOR TX66-68 ONLY
24	452394	1	SUPPORT, LH
24	452395	1	SUPPORT, RH
25	337475	10	NUT, M12, Cl 10,
26	140046	10	WASHER, Belleville, M12,
27	9706687	10	SCREW, Hex, M12 x 30, 8.8,
28	80442446	2	BUSHING, RUBBER,
29	446760	AR	SHIM, 0.2mm Thk, , -C1065
30	84032313	4	HOUSING, BEARING, , -C1315
30	84446877	4	HOUSING, BEARING, , D1316-
31	394630	AR	WASHER, 13MM
32	86508581	4	BOLT, Hex, M12 x 90, 8.8,
33	412597	4	BOLT, CARRIAGE, Short NK, M8 x 25, Cl8.8, Full Thd,
34	9706690	AR	NUT, M8, Cl 8,
35	335305	AR	RIVET,

04.06(01) FRONT SIEVES

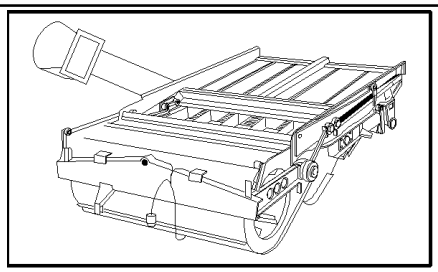

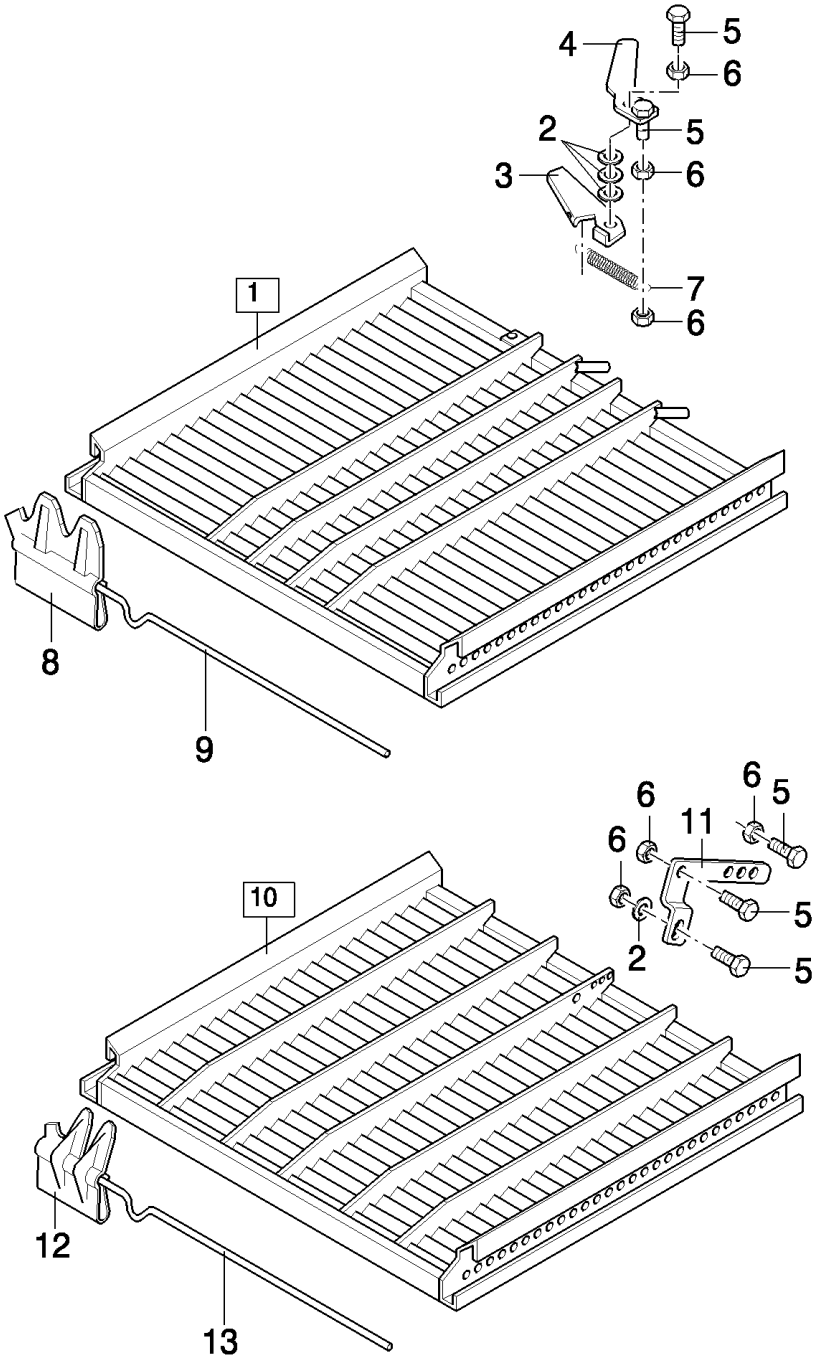

TX68 COMBINE - BASE UNIT

04.06(01) FRONT SIEVES

ссылка	Номер детали	Кол-во	Описание
1	9832171	1	SIEVE, CL1 1/8" (2 to 9), FOR TX66-68 ONLY
1	9833224	1	SIEVE, CL1 1/8" (2 to 9), FOR TX62-63-64-65 ONLY
2	140015	AR	WASHER, 6MM
3	9832710	1	HANDLE,
4	9832716	1	HANDLE,
5	80120099	AR	BOLT, Hex, M6 x 16, 8.8,
6	412152	AR	NUT, LOCK, M6 x 1, Cl 8.8,
7	9832711	1	SPRING,
8	481730	AR	BAR, L:230MM, FOR TX66-68 ONLY
8	445571	AR	BAR, L:240MM
9	9831090	23	WIRE, RETAINING, , FOR TX66-68 ONLY
9	9831632	23	WIRE, RETAINING, , FOR TX62-63-64-65 ONLY
10	920647	1	SIEVE, HC1 5/8" (2,5,6,11 to 13), FOR TX66-67-68 ONLY, ACCESSORY
10	920645	1	SIEVE, HC1 5/8" (2,5,6,11 to 13), ACCESSORY, FOR TX62-63-64-65 ONLY
11	421762	1	LEVER,
12	80396505	AR	BAR, L:230MM
12	80445568	AR	BAR, L:240MM
13	452791	16	WIRE, RETAINING, , FOR TX66-68 ONLY
13	428728	16	WIRE, RETAINING, , FOR TX62-63-64-65 ONLY

04.07(01) UPPER SIEVES

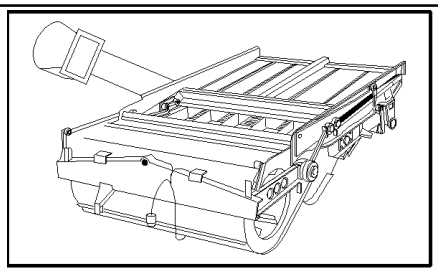

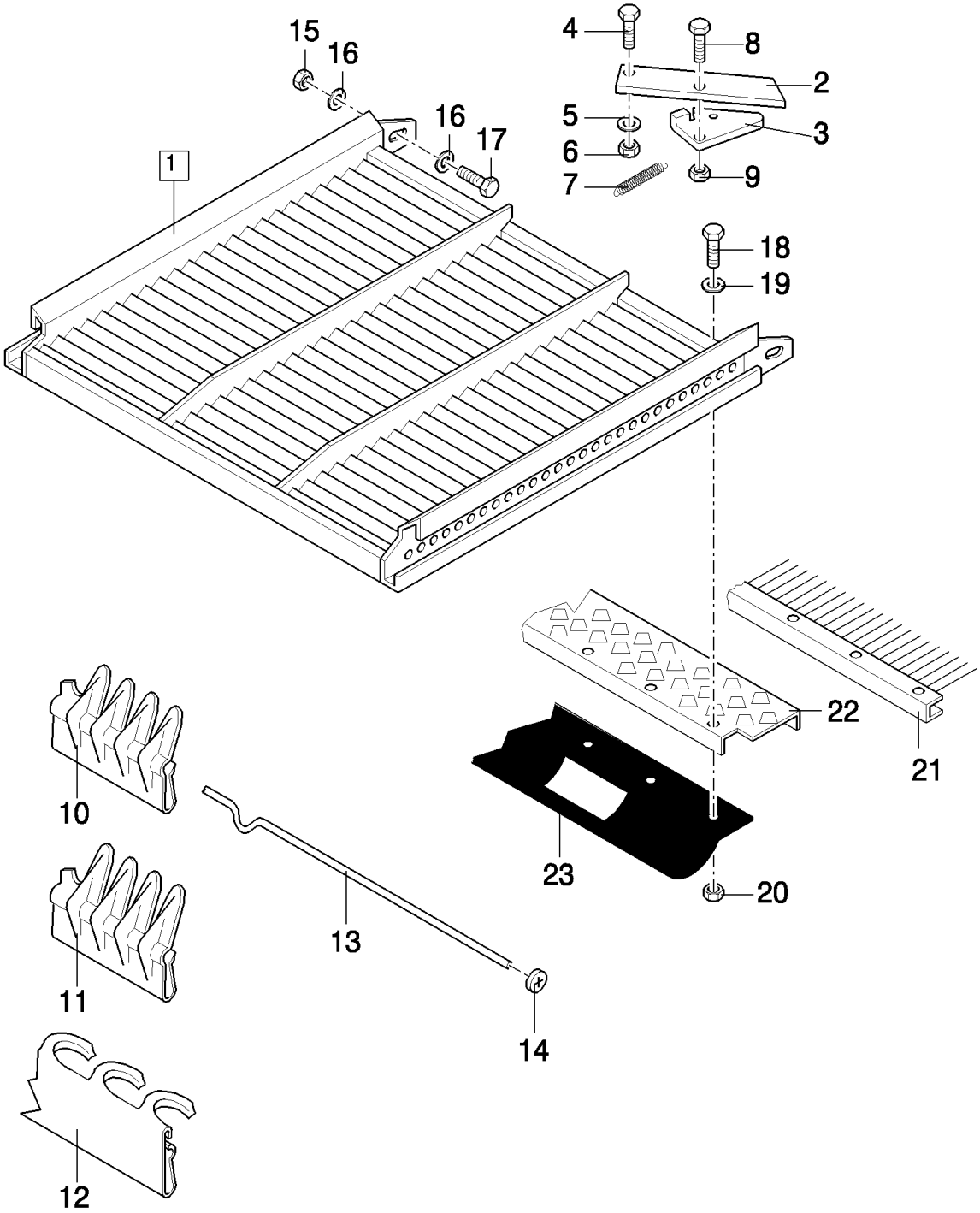

TX68 COMBINE - BASE UNIT

04.07(01) UPPER SIEVES

ссылка	Номер детали	Кол-во	Описание
1	453193	2	SIEVE, HC1 1/8" (2 to 10,13,14), FOR TX66-67-68 ONLY
1	430148	1	SIEVE, HC1 1/8" (2 to 10,13,14), FOR TX62-63-64-65 ONLY
1	453258	2	SIEVE, HC1 5/8" (2 to 9,11,13,14), FOR TX66-67-68 ONLY, ACCESSORY
1	431943	1	SIEVE, HC1 5/8" (2 to 9,11,13,14), ACCESSORY, FOR TX62-63-64-65 ONLY
1	457600	2	SIEVE, PET1 1/8" (2 to 9,12 to 14), ACCESSORY, FOR TX66-68 ONLY
1	748611	2	SIEVE, PET1 1/8" (2 to 9,12 to 14), ACCESSORY, FOR TX62-63-64-65 ONLY
2	450066	AR	HANDLE,
3	432187	AR	HANDLE,
4	120104	AR	SCREW, Hex, M8 x 20, 8.8,
5	300367	AR	WASHER, 8MM
6	412250	AR	NUT, LOCK, M8 x 1.25, Cl 8,
7	449942	AR	SPRING,
8	80120099	AR	BOLT, Hex, M6 x 16, 8.8,
9	412152	AR	NUT, LOCK, M6 x 1, Cl 8.8,
10	324715	AR	BAR, L:230MM
10	445569	AR	BAR, L:240MM
11	80396505	AR	BAR, L:230MM
11	80445568	AR	BAR, L:240MM
12	89832565	AR	BAR, L:230MM
12	89832566	AR	BAR, L:240MM
13	453189	AR	WIRE, RETAINING, , FOR TX66-67-68 ONLY
13	428728	AR	WIRE, RETAINING, , FOR TX62-63-64-65 ONLY
14	398561	AR	CLIP,
15	100016	3	NUT, M10, Cl 8,
16	140045	4	WASHER, SPRING, Belleville, M10,
17	338949	2	BOLT, CARRIAGE, Short NK, M10 x 25, Cl8.8, Full Thd,
17	120112	1	BOLT, Hex, M10 x 40, 8.8, Full Thd,
18	120100	8	BOLT, Hex, M6 x 20, 8.8,
19	322357	8	WASHER, SPRING, Belleville, M6,
20	15896221	8	NUT, M6, Cl 10,
21	453185	2	RAKE, , FOR TX66-67-68 ONLY, -C1241
21	84100961	2	RAKE, , FOR TX66-67-68 ONLY, D1242-
21	428816	1	RAKE, , FOR TX62-63-64-65 ONLY, -C1241
21	84100963	1	RAKE, , FOR TX62-63-64-65 ONLY, D1242-
22	453266	2	SIEVE EXTENSION, , FOR TX66-67-68 ONLY, ACCESSORY
22	430384	1	SIEVE EXTENSION, , ACCESSORY, FOR TX62-63-64-65 ONLY
23	743083	2	CANVAS, , FOR TX66-67-68 ONLY
23	743082	1	CANVAS, , FOR TX62-63-64-65 ONLY

04.08(01) LOWER SIEVES

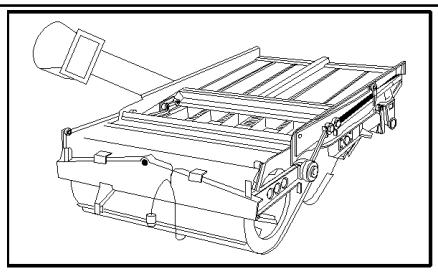

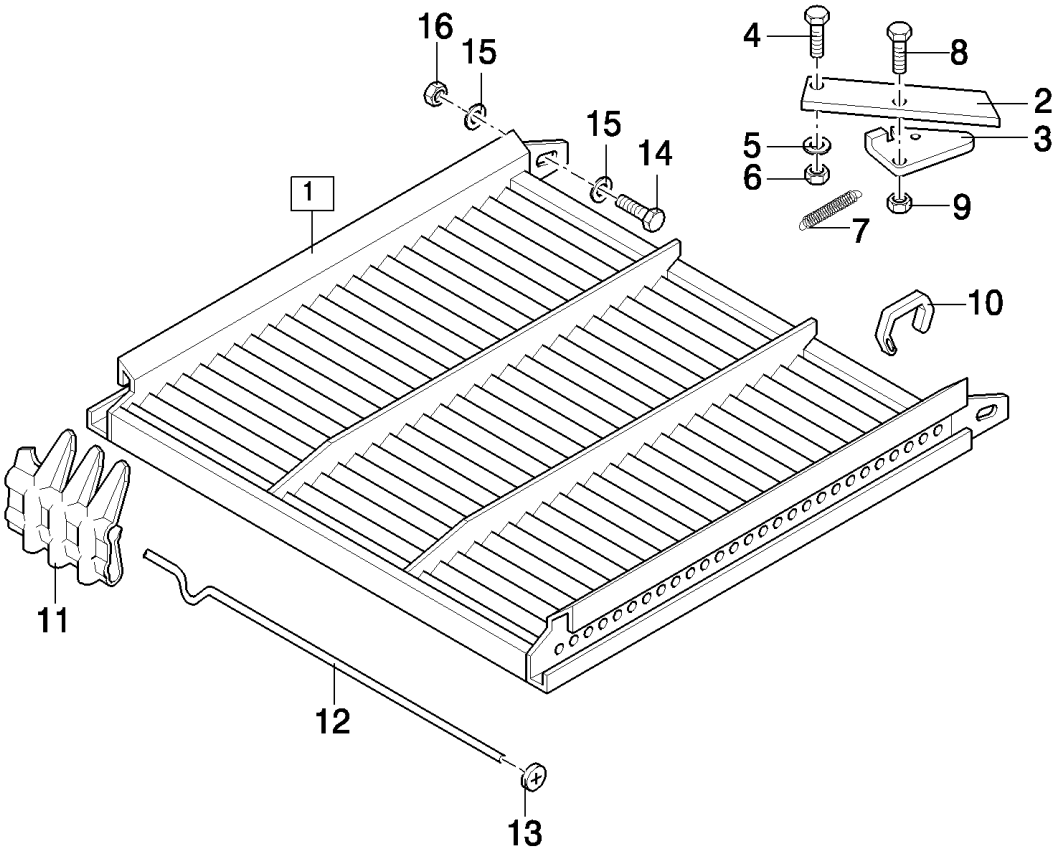

TX68 COMBINE - BASE UNIT

04.08(01) LOWER SIEVES

ссылка	Номер детали	Кол-во	Описание
1	9831370	2	SIEVE, HC 13/16" (2 to 13), FOR TX66-67-68 ONLY
1	9831346	1	SIEVE, HC 13/16" (2 to 13), FOR TX62-63-64-65 ONLY
2	450066	1	HANDLE, , -C1149
2	9817781	1	HANDLE, , D1150-
3	432187	1	HANDLE,
4	120104	1	SCREW, Hex, M8 x 20, 8.8,
5	300367	1	WASHER,
6	86629542	1	NUT, LOCK, M8 x 1.25, Cl 8,
7	449942	1	SPRING,
8	80120099	1	BOLT, Hex, M6 x 16, 8.8,
9	353308	1	NUT, M6 x 1, Cl 8,
10	9833305	1	INDICATOR,
11	748277	AR	BAR, L:230MM, FOR TX66-67-68 ONLY
11	748278	AR	BAR, L:240MM
12	453189	64	WIRE, RETAINING, , FOR TX66-67-68 ONLY
12	428728	64	WIRE, RETAINING, , FOR TX62-63-64-65 ONLY
13	398561	4	CLIP,
14	11106231	2	BOLT, Hex, M10 x 25, 10.9, Full Thd,
14	120112	1	BOLT, Hex, M10 x 40, 8.8, Full Thd,
15	140045	4	WASHER, SPRING, Belleville, M10,
16	100016	1	NUT, M10, Cl 8,

04.09(01) EXTENDED DIVIDERS

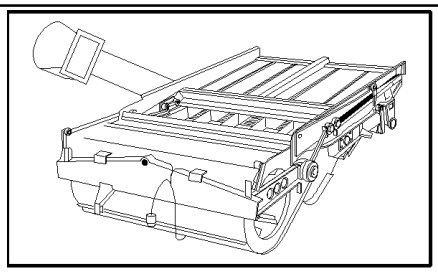

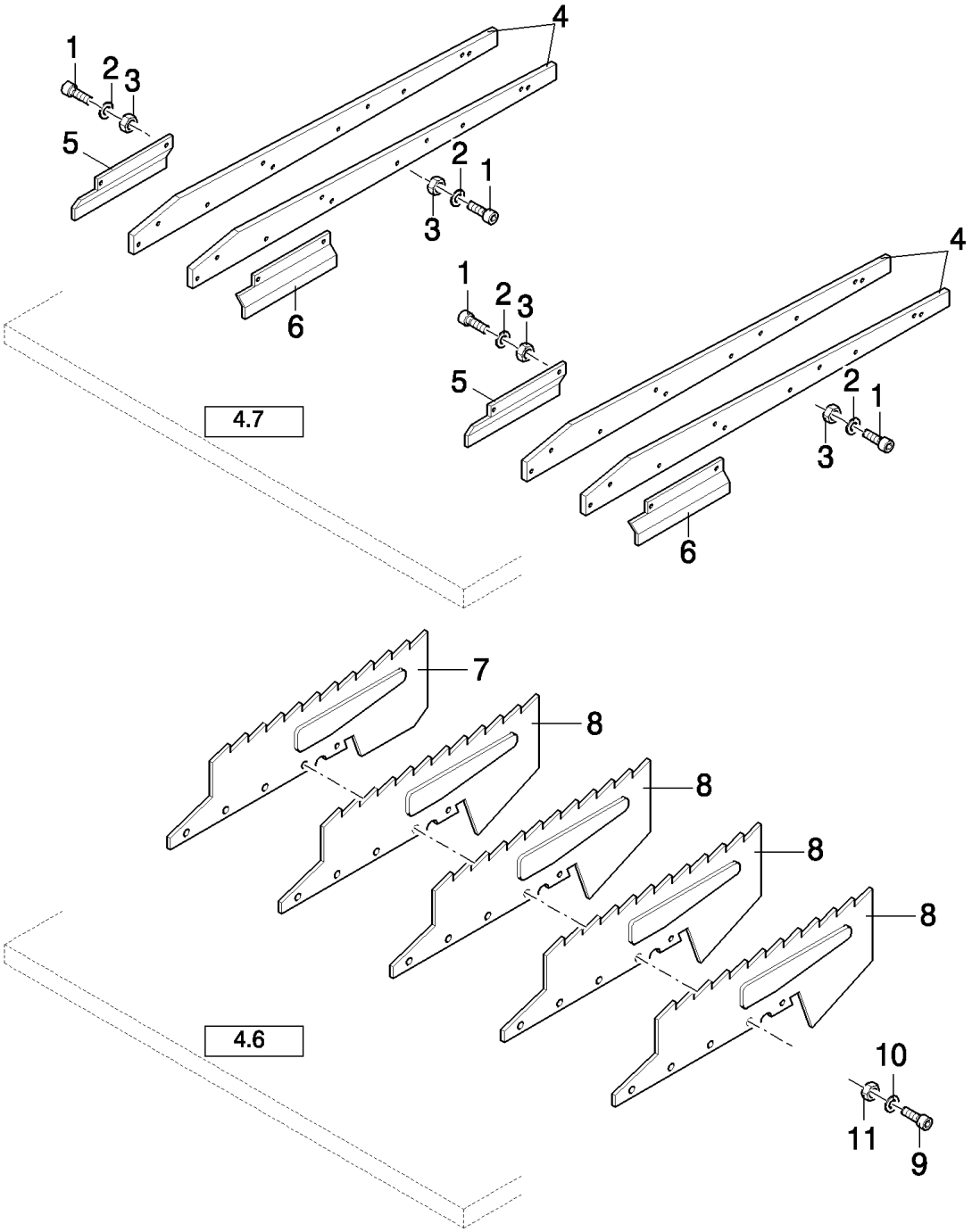

TX68 COMBINE - BASE UNIT

04.09(01) EXTENDED DIVIDERS

ссылка	Номер детали	Кол-во	Описание
1	321803	AR	SCREW, Cross Pan Hd, M4 x 10, M4x10
2	322355	AR	WASHER, Belleville, M4,
3	100012	AR	NUT, M4, Cl 8,
4	ZED922731	4	DIVIDER,
5	9506996	2	PLATE, RH, FOR TX66-67-68 ONLY
5	89506790	1	PLATE, RH, FOR TX62-63-64-65 ONLY
6	9506997	2	PLATE, LH, FOR TX66-67-68 ONLY
6	9506535	1	PLATE, LH, FOR TX62-63-64-65 ONLY
7	84012124	1	CAM, RH
8	9811136	4	CAM, , FOR TX66-67-68 ONLY
8	9811136	3	CAM, , FOR TX62-63-64-65 ONLY
9	300806	AR	SCREW, Hex, M5 x 10, 8.8, Full Thd,
10	322356	AR	WASHER, 5MM
11	86508813	AR	NUT, M5, Cl 8,

04.10(01) FRAME FOR INTERCHANGEABLE SIEVES WITH SIEVES O 16 AND O 18MM - ACCESSORIES

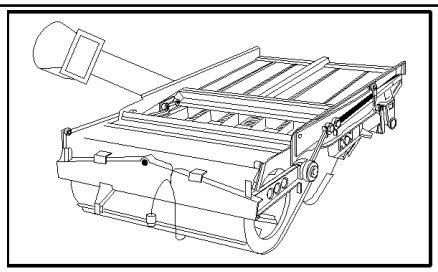

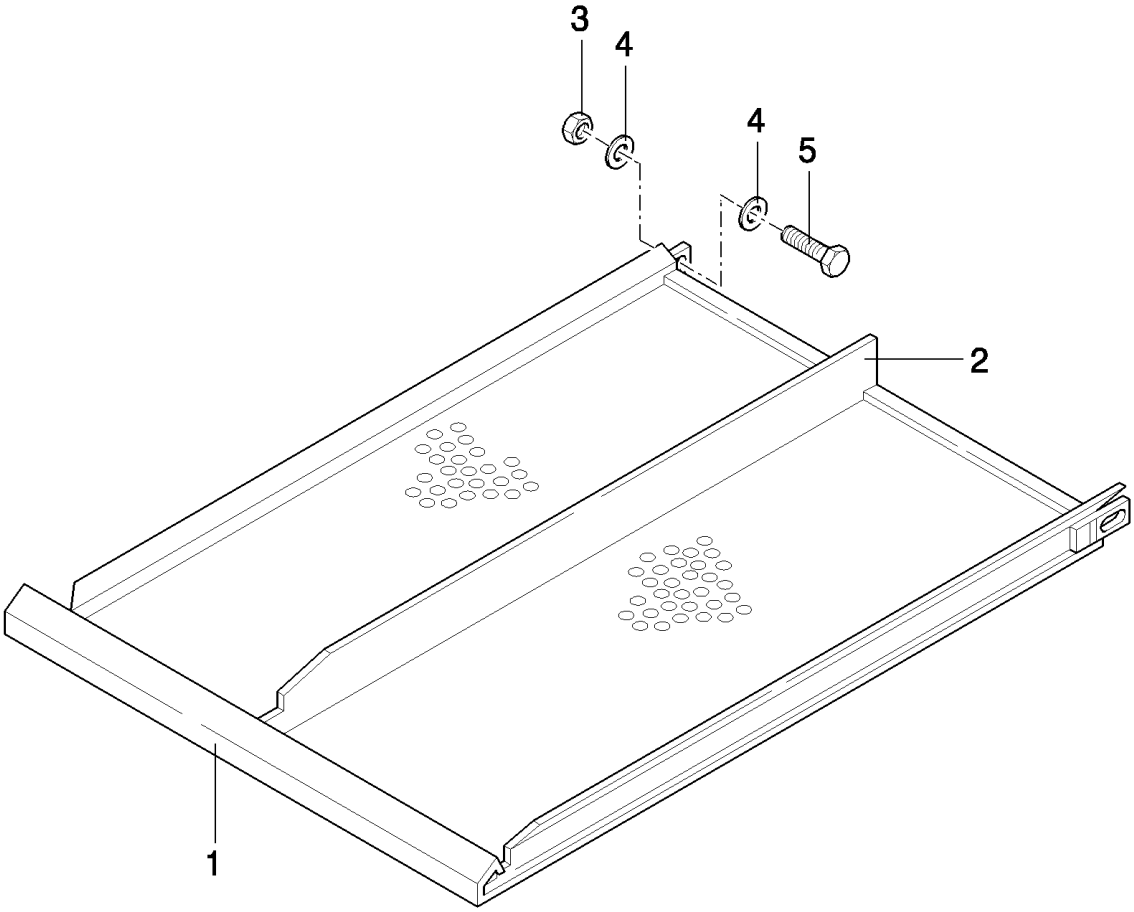

TX68 COMBINE - BASE UNIT

04.10(01) FRAME FOR INTERCHANGEABLE SIEVES WITH SIEVES O 16 AND O 18MM - ACCESSORIES

ссылка	Номер детали	Кол-во	Описание
1	740819	2	FRAME, , FOR TX66-67-68 ONLY
1	740778	1	FRAME, , FOR TX62-63-64-65 ONLY
2	9500737	2	SIEVE, DIA.:16MM, FOR TX66-67-68 ONLY
2	9500735	1	SIEVE, DIA.:16MM, FOR TX62-63-64-65 ONLY
2	9500738	2	SIEVE, DIA.:18MM, FOR TX66-67-68 ONLY
2	9500736	1	SIEVE, DIA.:18MM, FOR TX62-63-64-65 ONLY
3	100016	3	NUT, M10, Cl 8,
4	140045	4	WASHER, SPRING, Belleville, M10,
5	338949	2	BOLT, CARRIAGE, Short NK, M10 x 25, Cl8.8, Full Thd,
5	120112	1	BOLT, Hex, M10 x 40, 8.8, Full Thd,

04.11(01) ECCENTRIC AND SHAKER SHOE DRIVE - SELF-LEVELLING

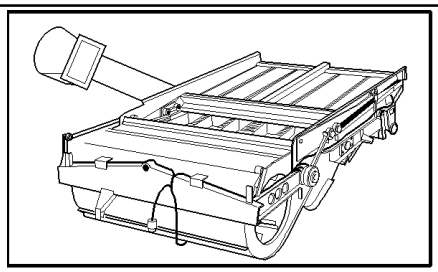

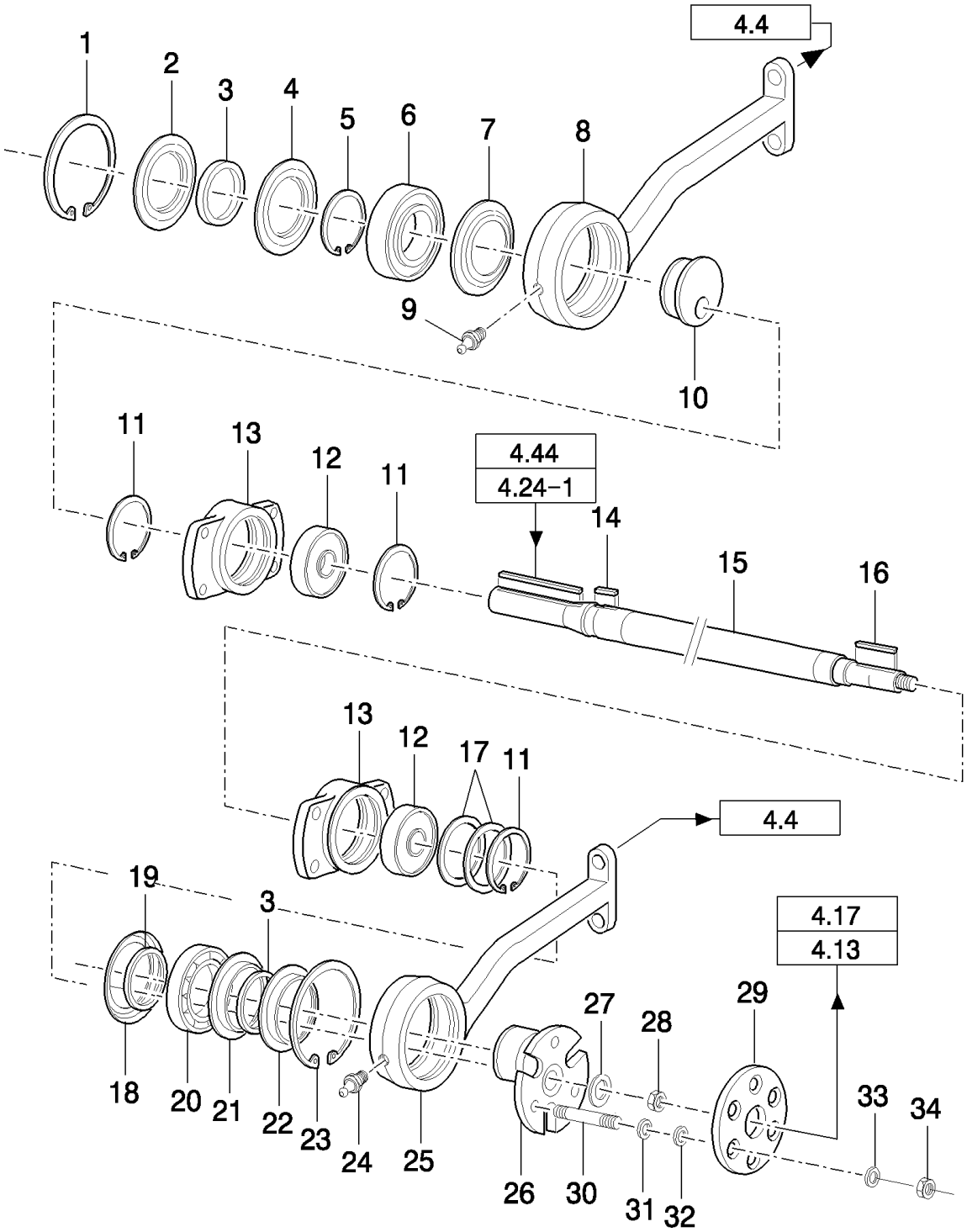

TX68 COMBINE - BASE UNIT

04.11(01) ECCENTRIC AND SHAKER SHOE DRIVE - SELF-LEVELLING

ссылка	Номер детали	Кол-во	Описание
1	370014	1	RING, SNAP, M130, Int,
2	9832769	1	FLANGE,
3	448736	2	SEALRING,
4	9831118	1	FLANGE,
5	9832771	1	CIRCLIP,
6	9833081	1	BEARING, BALL,
7	9832772	1	RING,
8	84320634	1	ARM, RH
9	321204	1	NIPPLE, LUBE, M6 x 1, 16mm lg,
10	9832765	1	ECCENTRIC,
11	370013	3	RING, SNAP, M90, Int,
12	913716	2	BEARING, BALL,
13	9508716	2	HOUSING, BEARING,
14	9817851	1	KEY,
15	9832762	1	SHAFT, , FOR TX66-67-68 ONLY
15	9832763	1	SHAFT, , FOR TX62-63-64-65 ONLY
16	170042	1	KEY, , -C7520
16	9817851	1	KEY, , D7520-
17	435045	AR	SHIM,
17	448780	AR	SHIM,
18	388427	1	RING,
19	449442	1	CIRCLIP,
20	210039	1	BEARING, BALL,
21	9831083	1	FLANGE,
22	448735	1	FLANGE,
23	388294	1	RING, SNAP, M125, Int,
24	321204	1	NIPPLE, LUBE, M6 x 1, 16mm lg,
25	84320632	1	ARM, LH
26	9832175	1	ECCENTRIC,
27	378247	1	WASHER, 20MM
28	320771	1	NUT, Thin, M20 x 1.5, Cl 04,
29	9515000	1	JOINT, UNIVERSAL,
30	412193	3	STUD, , -C5410
30	84019932	3	STUD, , D5410-
31	378244	AR	WASHER, M10,
32	331160	AR	WASHER, 10MM
33	412655	3	WASHER, SPRING, Belleville, M10,
34	100016	3	NUT, M10, Cl 8,

04.12(01) ECCENTRIC AND SHAKER SHOE DRIVE - FIXED SHOE

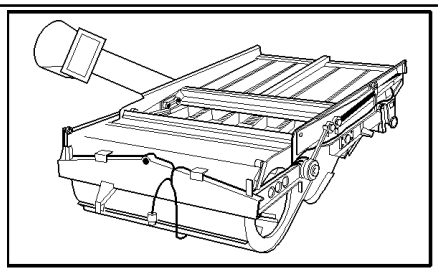

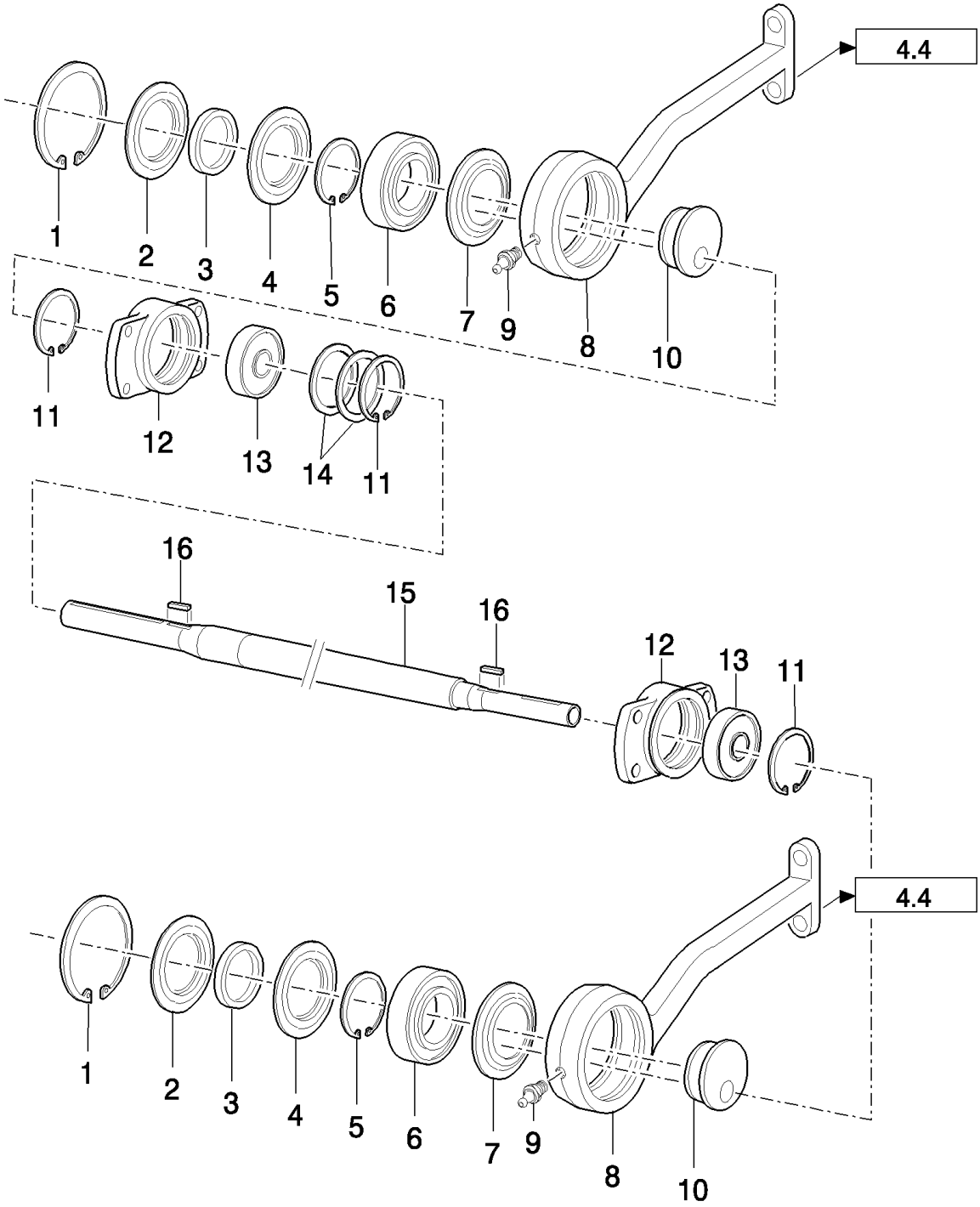

TX68 COMBINE - BASE UNIT

04.12(01) ECCENTRIC AND SHAKER SHOE DRIVE - FIXED SHOE

ссылка	Номер детали	Кол-во	Описание
1	370014	2	RING, SNAP, M130, Int,
2	9832769	2	FLANGE,
3	448736	2	SEALRING,
4	9831118	2	FLANGE,
5	9832771	2	CIRCLIP,
6	9833081	2	BEARING, BALL,
7	9832772	2	RING,
8	9833156	2	ARM, , BSN C387
8	84320626	2	ARM, , ASN D388
9	321204	2	NIPPLE, LUBE, M6 x 1, 16mm lg,
10	9832765	2	ECCENTRIC,
11	370013	3	RING, SNAP, M90, Int,
12	9508716	2	HOUSING, BEARING,
13	913716	2	BEARING, BALL,
14	435045	AR	SHIM,
14	448780	AR	SHIM,
15	9833139	1	SHAFT, , FOR TX62-63-64-65 ONLY
15	84015872	1	SHAFT, , FOR TX66-67-68 ONLY, D5550-
16	9817851	2	KEY,

04.13(01) GEARBOX - SELF-LEVELLING

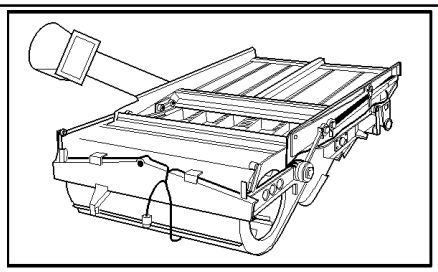

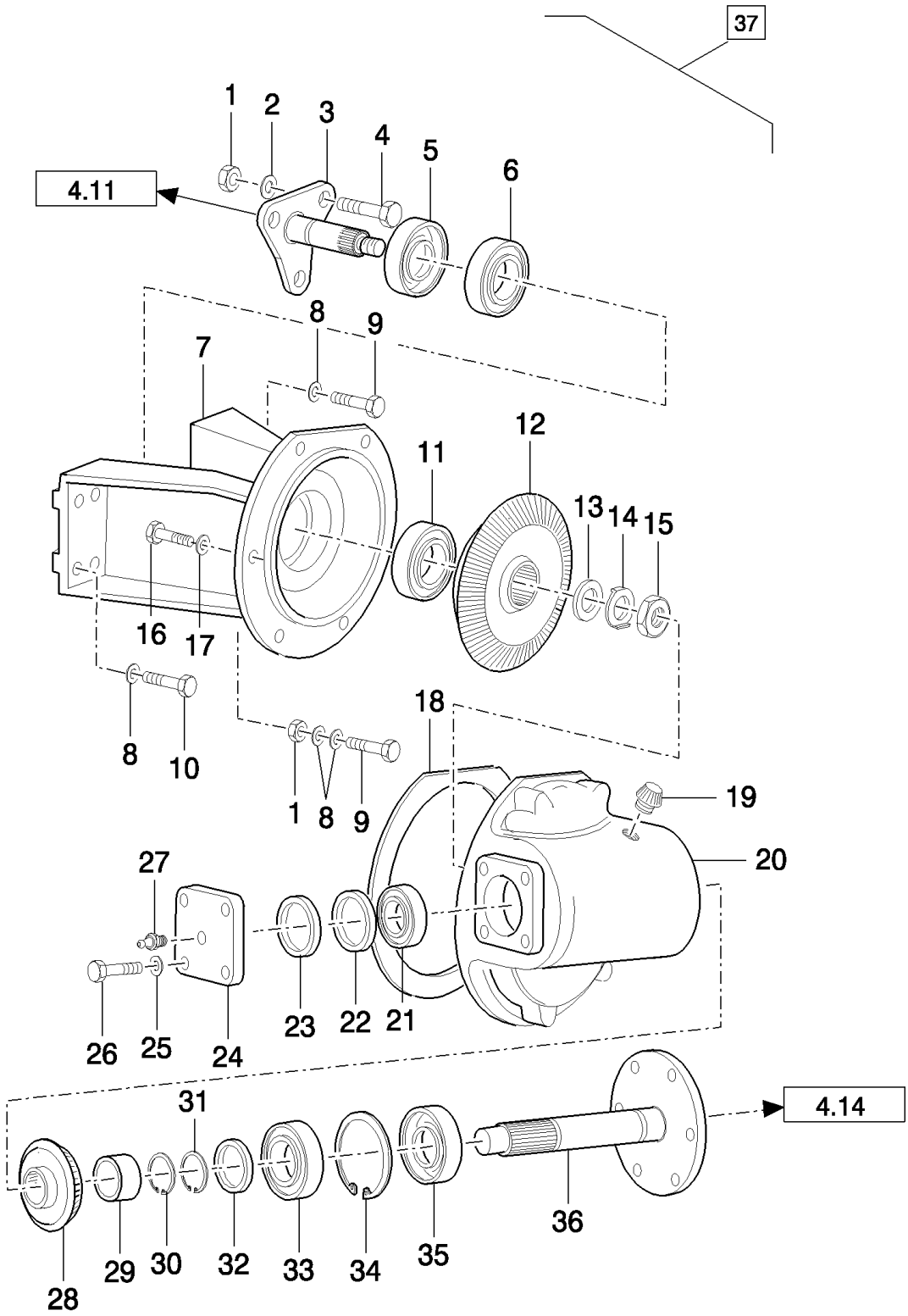

TX68 COMBINE - BASE UNIT

04.13(01) GEARBOX - SELF-LEVELLING

ссылка	Номер детали	Кол-во	Описание
1	100016	7	NUT, M10, Cl 8,
2	412655	3	WASHER, SPRING, Belleville, M10,
3	452284	1	SHAFT,
4	120113	3	BOLT, Hex, M10 x 50, 8.8, Full Thd,
5	357923	1	SEAL, OIL,
6	309085	1	BEARING ASSY,
7	9514942	1	SUPPORT,
8	140045	8	WASHER, SPRING, Belleville, M10,
9	120201	4	BOLT, Hex, M10 x 35, 8.8, Full Thd,
10	120112	2	BOLT, Hex, M10 x 40, 8.8, Full Thd,
11	428466	1	BEARING ASSY,
12	439536	1	PINION, BEVEL,
13	378246	1	WASHER, 16MM
14	442435	1	WASHER, LOCK,
15	364164	1	NUT, Thin, M16 x 1.5, Cl 04, M16
16	43127	6	BOLT, Hex, M8 x 25, 8.8,
17	322358	6	WASHER, SPRING, Belleville, M8,
18	439800	AR	PLATE, ADJUSTING,
19	46566	1	BREATHER,
20	439754	1	HOUSING,
21	412287	1	BEARING ASSY,
22	440978	AR	PLATE, ADJUSTING, THK.:0.2MM
23	140124	AR	PLATE, ADJUSTING, THK.:0.5MM
24	9516476	1	COVER,
25	322357	4	WASHER, SPRING, Belleville, M6,
26	80120099	4	BOLT, Hex, M6 x 16, 8.8,
27	321204	1	NIPPLE, LUBE, M6 x 1, 16mm lg,
28	439535	1	PINION, BEVEL,
29	446469	1	SPACER,
30	300629	1	RING, SNAP, M28, Ext,
31	370003	2	RING, SNAP, M30, Ext,
32	452194	1	WASHER,
33	309085	1	BEARING ASSY,
34	370012	1	RING, SNAP, M62, Int,
35	417722	1	SEAL,
36	454843	1	SHAFT,
37	9814963	1	GEARBOX, (1 to 36), BSN C375
37	84068826	1	GEARBOX, (1 to 36), ASN D376

04.14(01) POWER TAKE-OFF - SELF-LEVELLING

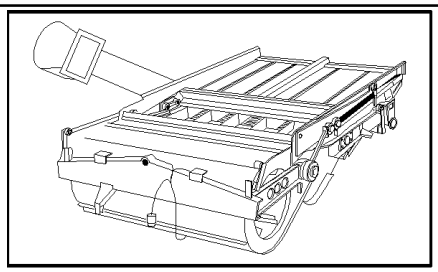

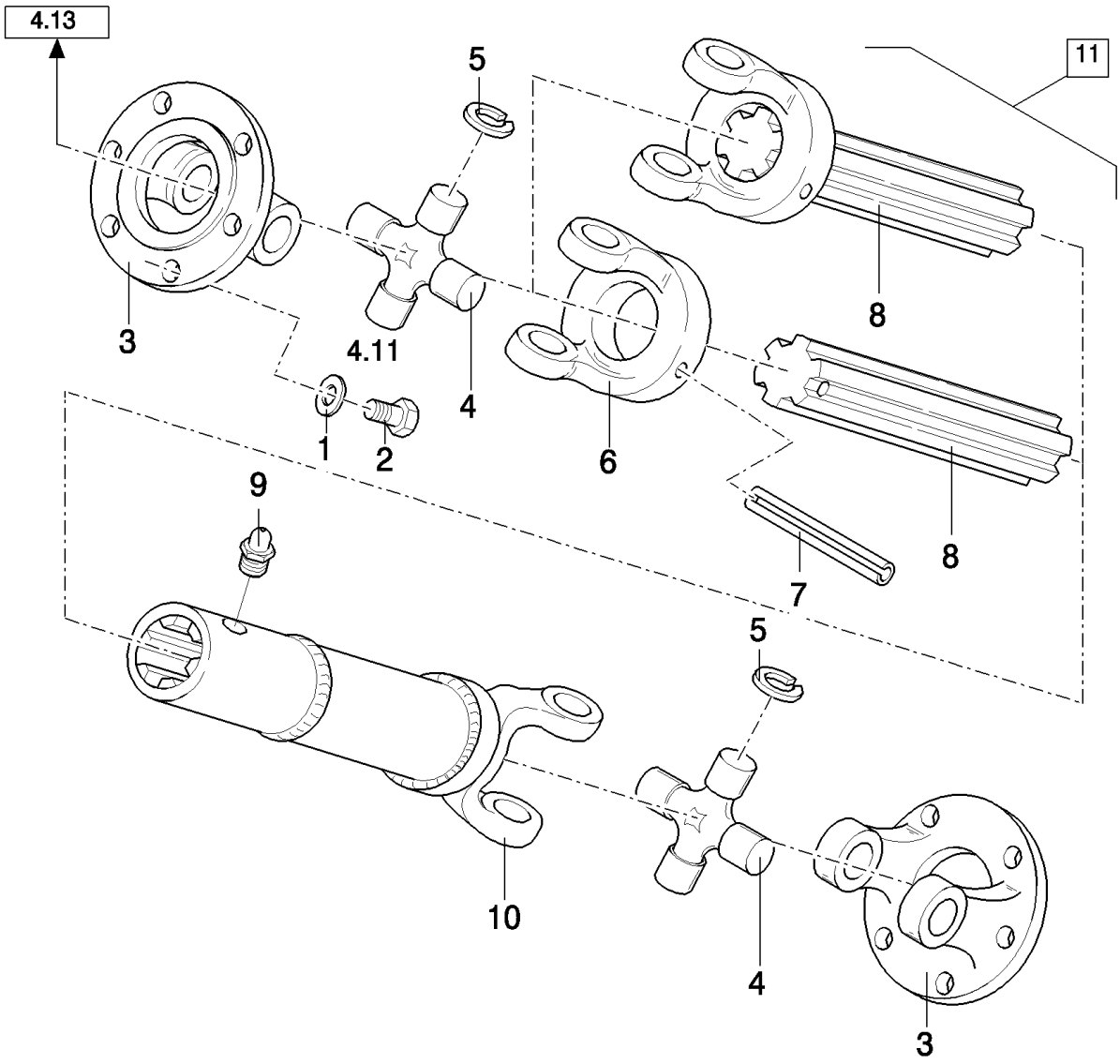

TX68 COMBINE - BASE UNIT

04.14(01) POWER TAKE-OFF - SELF-LEVELLING

ссылка	Номер детали	Кол-во	Описание
1	140045	12	WASHER, SPRING, Belleville, M10,
2	11106231	12	BOLT, Hex, M10 x 25, 10.9, Full Thd,
3	449829	2	YOKE, , BSN C371
3	84454443	2	YOKE, , ASN D372
4	418936	2	SPIDER, , BSN C371
4	84454444	2	SPIDER, , ASN D372
5	418937	8	CIRCLIP, , -C1285
5	456752	8	CIRCLIP, , BSN F1286
5	84454445	8	CIRCLIP, , ASN D372
6	449832	1	YOKE, , BSN C371
7	449833	1	PIN, , -C1285
7	412689	1	PIN, LOCK, M8 x 50, Slotted, , BSN F1286
8	449834	1	SHAFT, , BSN C371
8	84454447	1	YOKE, , ASN D372
9	412014	1	NIPPLE, LUBE,
10	449831	1	SHAFT, , BSN C371
10	84454446	1	SHAFT, , ASN D372
11	434188	1	SHAFT, PTO, (3 to 10), -C1285
11	84074377	1	SHAFT, PTO, (3 to 10), BSN F1286
11	84454449	1	SHAFT, PTO, (3 to 10), ASN D372

04.15(01) SHAKER SHOE DRIVE - SELF-LEVELLING

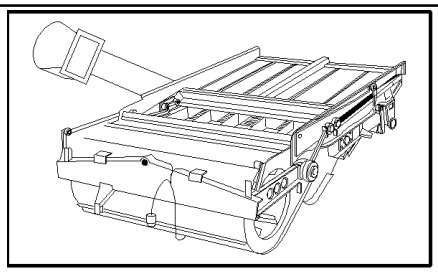

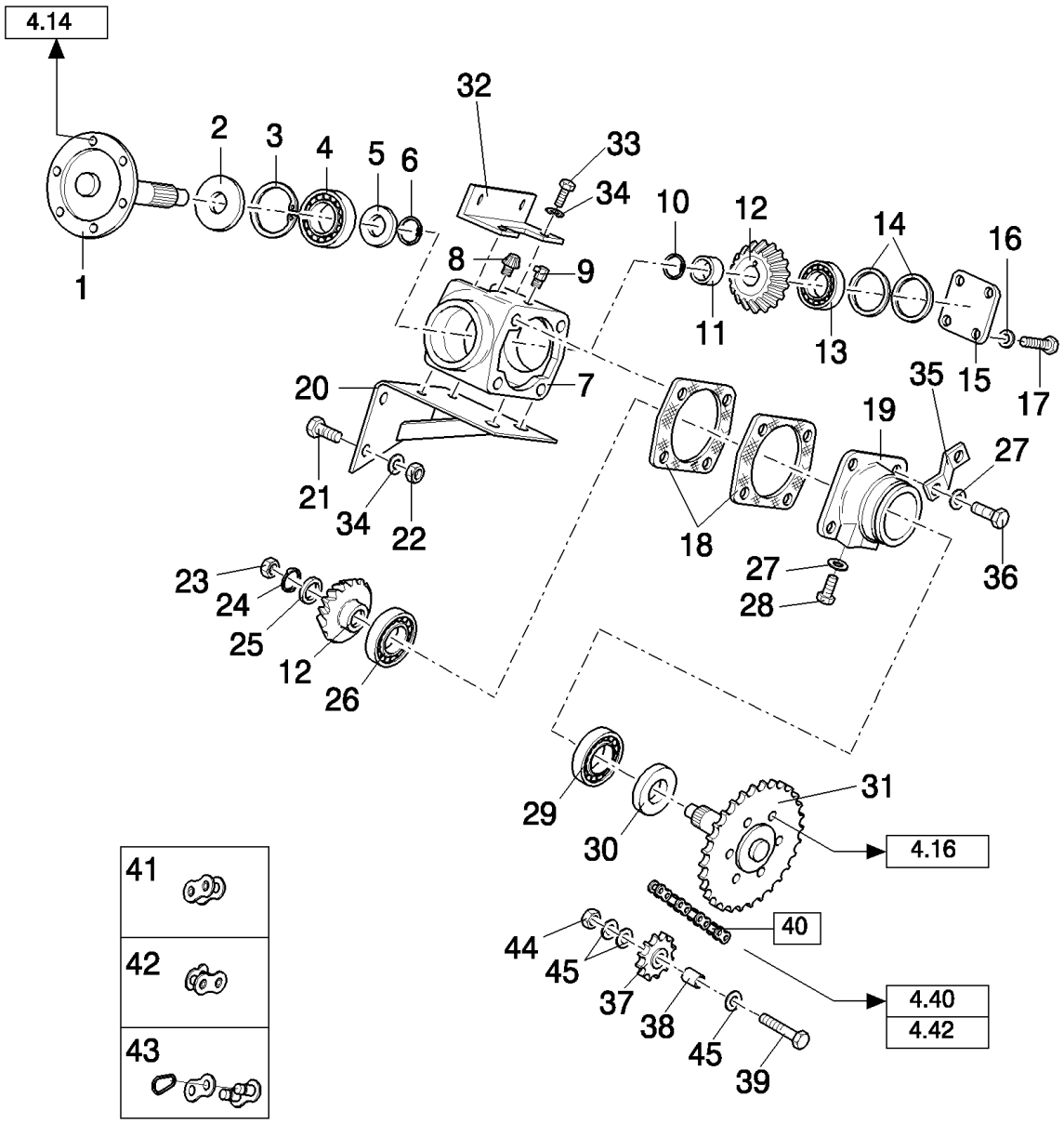

TX68 COMBINE - BASE UNIT

04.15(01) SHAKER SHOE DRIVE - SELF-LEVELLING

ссылка	Номер детали	Кол-во	Описание
	9814964	1	GEARBOX, (1 to 31), BSN C375
	84819640	1	GEARBOX, (1 to 31), ASN D376
1	454844	1	SHAFT,
2	417722	1	SEAL,
3	370012	1	RING, SNAP, M62, Int,
4	309085	1	BEARING ASSY,
5	452194	2	WASHER, 30MM
6	370003	1	RING, SNAP, M30, Ext,
7	9507274	1	HOUSING,
8	46566	1	BREATHER,
9	80717	1	NIPPLE, LUBE, 45є, 1/8" NPT x 7/8" lg,
10	300629	1	RING, SNAP, M28, Ext,
11	446469	1	SPACER,
12	439534	1	GEAR,
13	412287	1	BEARING ASSY,
14	140124	AR	PLATE, ADJUSTING, THK.:0.5MM
14	440978	AR	PLATE, ADJUSTING, THK.:0.2MM
15	434259	1	COVER, , BSN C375
15	84097369	1	COVER, , ASN D376
16	322357	4	WASHER, SPRING, Belleville, M6,
17	80120099	4	BOLT, Hex, M6 x 16, 8.8,
18	439757	3	PLATE, ADJUSTING,
18	434243	3	PLATE, ADJUSTING,
19	429358	1	HOUSING, BEARING,
20	9507302	1	SUPPORT,
21	11106231	5	BOLT, Hex, M10 x 25, 10.9, Full Thd,
22	100016	5	NUT, M10, Cl 8,
23	364164	1	NUT, Thin, M16 x 1.5, Cl 04, M16
24	442435	1	WASHER, LOCK,
25	378246	1	WASHER, 16MM
26	428466	1	BEARING ASSY,
27	322358	6	WASHER, SPRING, Belleville, M8,
28	120104	3	SCREW, Hex, M8 x 20, 8.8,
29	439692	1	BEARING ASSY,
30	357923	1	SEAL, OIL,
31	9503142	1	SPROCKET, , FOR TX66-67-68 ONLY
31	452187	1	SPROCKET, , FOR TX62-64-65 ONLY, -C5550
31	9503142	1	SPROCKET, , FOR TX62-63-64-65 ONLY, D5550-
31	84819642	1	SHAFT, , FOR TX62-63-64-65-66-67-68 ONLY, ASN D376
32	9507301	1	SUPPORT,
33	43138	6	SCREW, Hex, M10 x 20, 8.8, Full Thd,
34	140045	11	WASHER, SPRING, Belleville, M10,
35	455544	1	SUPPORT,
36	43127	6	BOLT, Hex, M8 x 25, 8.8,

TX68 COMBINE - BASE UNIT

04.15(01) SHAKER SHOE DRIVE - SELF-LEVELLING

ссылка	Номер детали	Кол-во	Описание
37	9507227	1	SPROCKET, DRIVEN, , -C5410
37	9831670	1	SPROCKET, , D5410-
38	431990	1	BUSHING, , -C5410
38	84022798	1	BUSHING, , D5410-
39	300512	1	SCREW, Hex, M12 x 55, 8.8,
40	451356	1	CHAIN, (41 to 43)
41	25808	49	LINK, CHAIN,
42	241-1716	1	
43	165590	1	LINK, CONNECTING,
44	412126	1	NUT, LOCK, M12 x 1.75, Cl 8,
45	378245	AR	WASHER, M12, 13MM

04.16(01) SHAKER SHOE DRIVE - SELF-LEVELLING

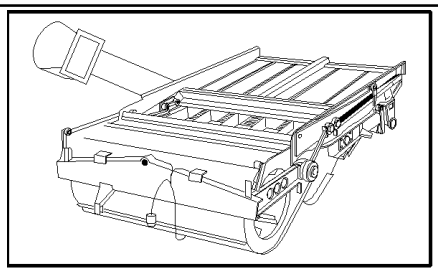

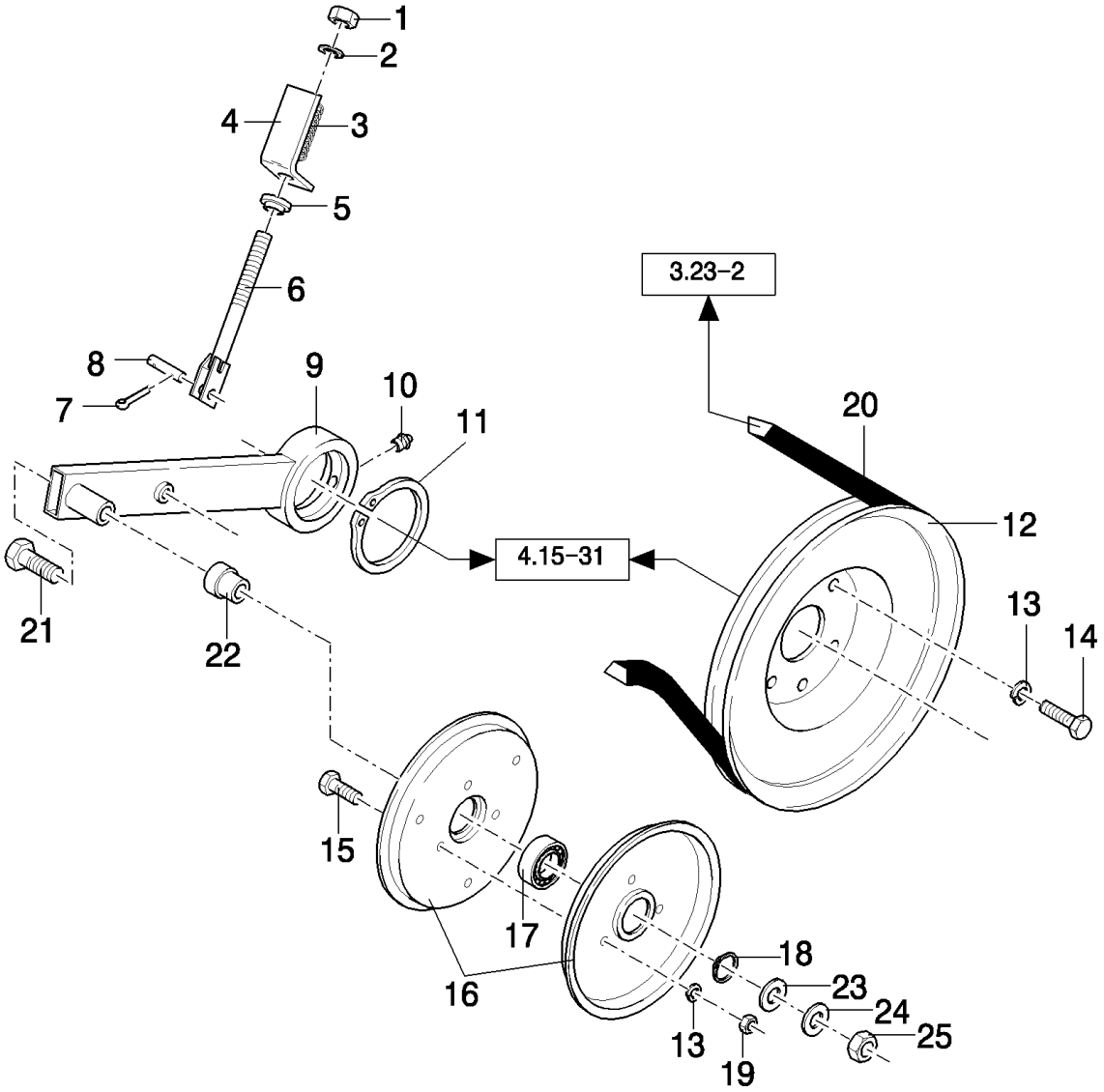

TX68 COMBINE - BASE UNIT

04.16(01) SHAKER SHOE DRIVE - SELF-LEVELLING

ссылка	Номер детали	Кол-во	Описание
1	86514720	1	NUT, LOCK, M10
2	140042	1	WASHER, M10 x 34 x 3,
3	84814907	1	SPRING,
4	434226	1	INDICATOR, , -C5410
4	84022773	1	INDICATOR, , D5410-
5	439857	1	BUSHING,
6	449107	1	ROD, ADJUSTMENT,
7	130003	2	PIN, SPLIT (COTTER), M3.2 x 20,
8	390019	1	PIN,
9	922128	1	ARM, , -C5620
9	84021029	1	ARM, , D5620-
10	321204	1	NIPPLE, LUBE, M6 x 1, 16mm lg,
11	300637	1	RING, SNAP, M75, Ext,
12	454500	1	PULLEY,
13	322358	12	WASHER, SPRING, Belleville, M8,
14	120104	6	SCREW, Hex, M8 x 20, 8.8,
16	434227	2	PULLEY, , -C1151
16	426717	2	HALF-PULLEY, , D1152-
17	443898	1	BEARING, BALL,
18	370002	1	RING, SNAP, M25, Ext, , -C5620
19	9706690	6	NUT, M8, Cl 8,
20	448794	1	BELT, TRANSMISSION,
21	334967	1	BOLT, Hex, M16 x 140, 8.8, M16x40, D5620-
22	9515145	1	BUSHING, , D5620-
23	378246	1	WASHER, 16MM, D5620-
24	140048	1	WASHER, SPRING, Belleville, M16, , D5620-
25	100020	1	NUT, M16, Cl 8, , D5620-
15	16043224	6	BOLT, Hex, M8 x 16, 8.8, Full Thd,

04.17(01) SHAKER SHOE DRIVE, BLOCKED FRAME - UNTIL --17999

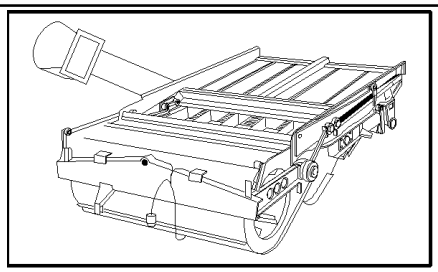

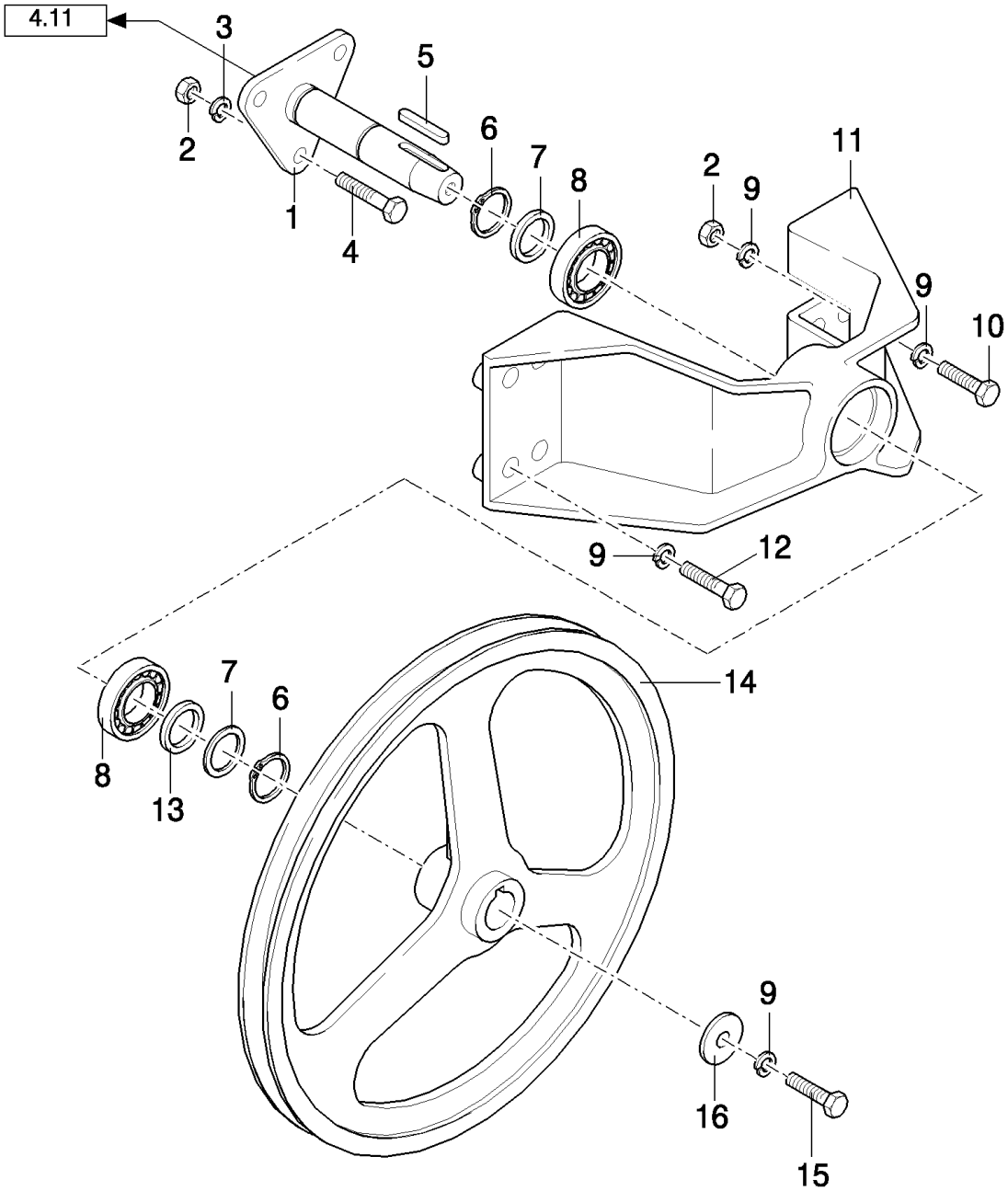

TX68 COMBINE - BASE UNIT

04.17(01) SHAKER SHOE DRIVE, BLOCKED FRAME - UNTIL --17999

ссылка	Номер детали	Кол-во	Описание
1	9516405	1	SHAFT,
2	100016	7	NUT, M10, Cl 8,
3	412655	3	WASHER, SPRING, Belleville, M10,
4	120113	3	BOLT, Hex, M10 x 50, 8.8, Full Thd,
5	170010	1	KEY,
6	370003	2	RING, SNAP, M30, Ext,
7	140109	2	WASHER, 31MM
8	210043	2	BEARING, BALL,
9	140045	8	WASHER, SPRING, Belleville, M10,
10	120201	4	BOLT, Hex, M10 x 35, 8.8, Full Thd,
11	9514941	1	HOUSING, BEARING,
12	120112	2	BOLT, Hex, M10 x 40, 8.8, Full Thd,
13	140108	AR	WASHER, 31MM
14	9516407	1	PULLEY,
15	43140	1	BOLT, Hex, M10 x 30, 8.8, Full Thd,
16	9511932	1	WASHER,

04.18(01) SHAKER SHOE DRIVE, FIXED SHOE

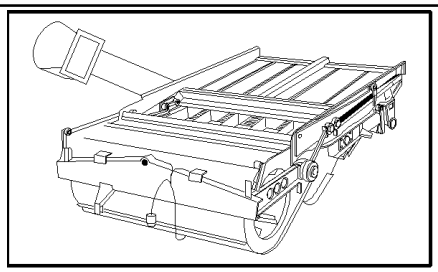

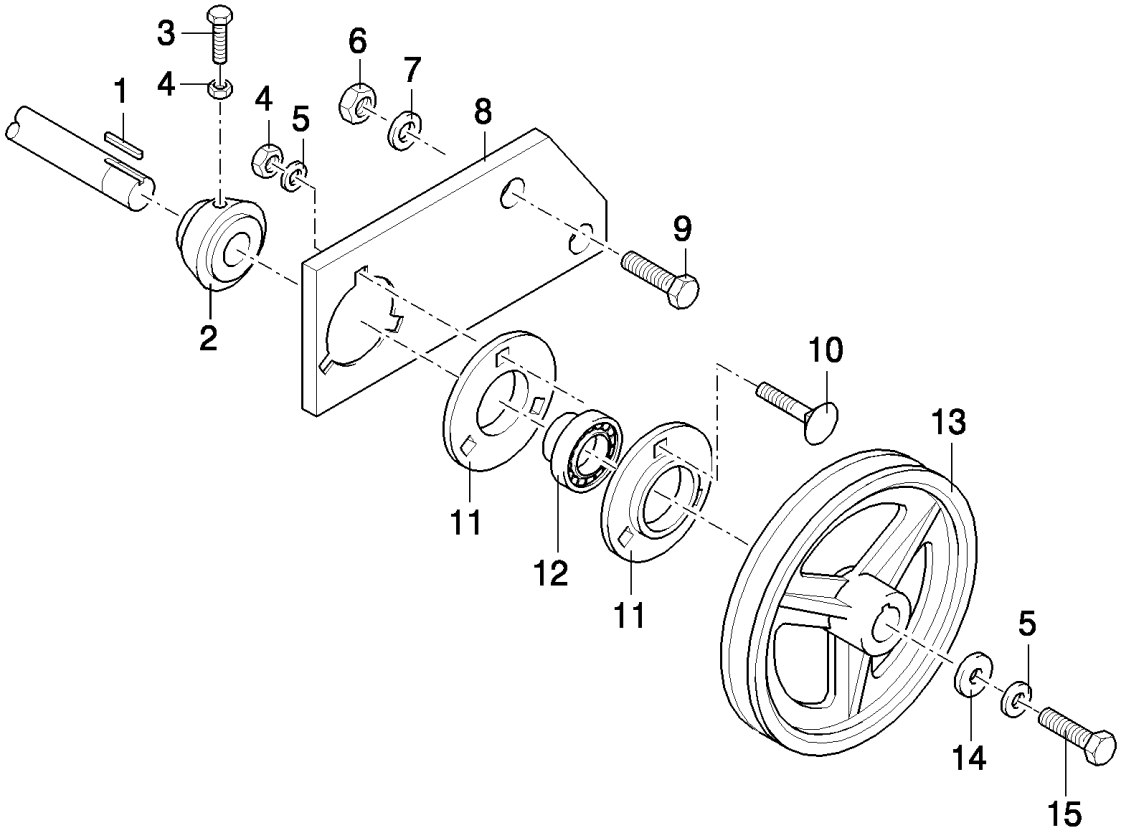

TX68 COMBINE - BASE UNIT

04.18(01) SHAKER SHOE DRIVE, FIXED SHOE

ссылка	Номер детали	Кол-во	Описание
1	170010	1	KEY,
2	89833140	1	HUB,
3	120112	1	BOLT, Hex, M10 x 40, 8.8, Full Thd,
4	100016	4	NUT, M10, Cl 8,
5	140045	4	WASHER, SPRING, Belleville, M10,
6	337475	2	NUT, M12, Cl 10,
7	140046	2	WASHER, Belleville, M12,
8	84011483	1	PLATE, COVER,
9	300388	2	SCREW, Hex, M12 x 25, 8.8,
10	338949	3	BOLT, CARRIAGE, Short NK, M10 x 25, Cl8.8, Full Thd,
11	40697	2	FLANGE,
12	325106	1	BEARING ASSY,
13	80447158	1	PULLEY,
14	9511932	1	WASHER,
15	43140	1	BOLT, Hex, M10 x 30, 8.8, Full Thd,

04.19(01) SHAKER SHOE DRIVE, FIXED SHOE AND BLOCKED FRAME

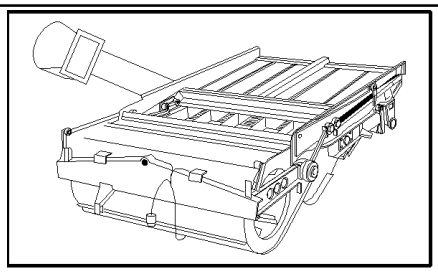

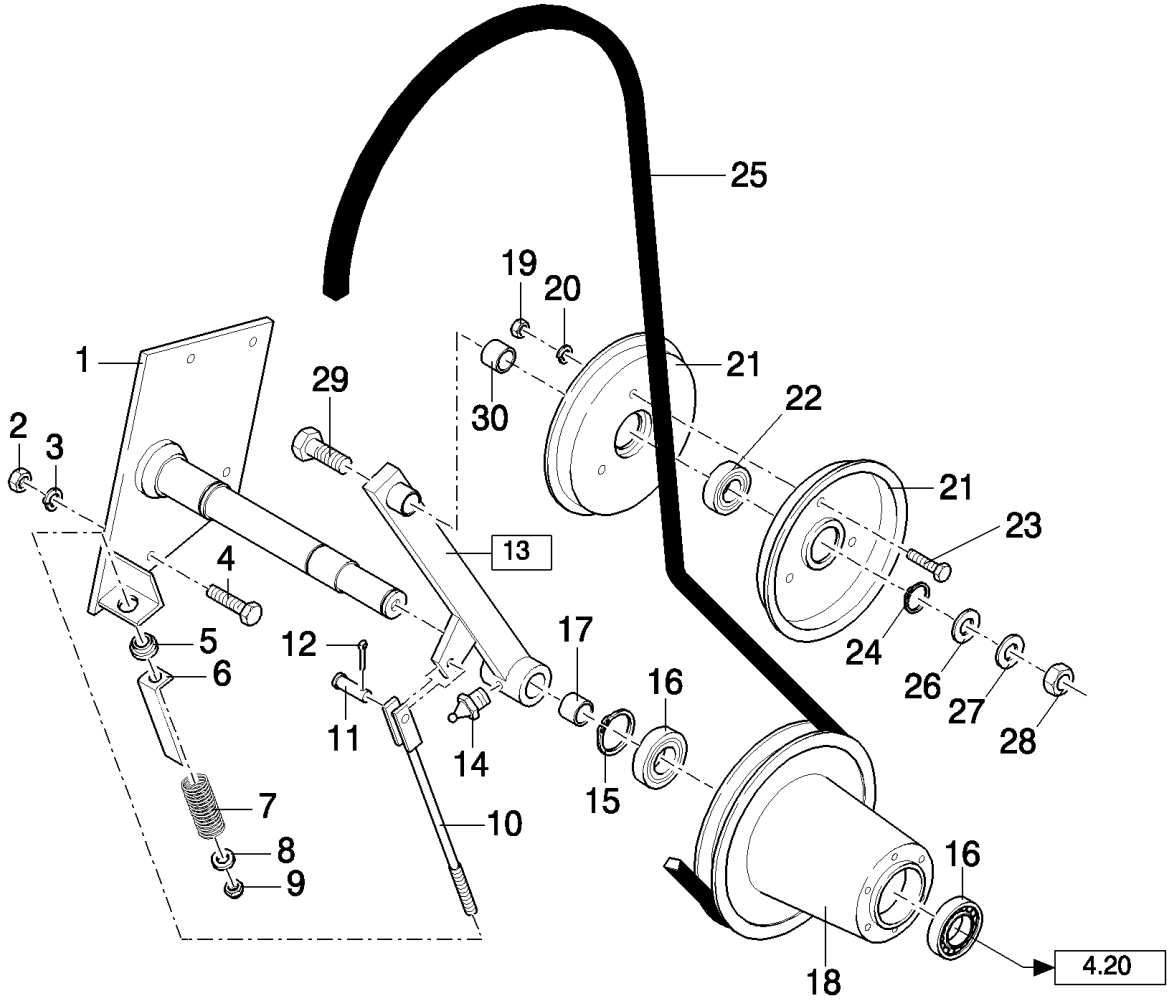

TX68 COMBINE - BASE UNIT

04.19(01) SHAKER SHOE DRIVE, FIXED SHOE AND BLOCKED FRAME

ссылка	Номер детали	Кол-во	Описание
1	447359	1	SHAFT,
2	100016	5	NUT, M10, Cl 8,
3	140045	5	WASHER, SPRING, Belleville, M10,
4	43140	5	BOLT, Hex, M10 x 30, 8.8, Full Thd,
5	439857	1	BUSHING,
6	922015	1	INDICATOR, , -C5410
6	84022774	1	INDICATOR, , D5410-
7	322987	1	SPRING,
8	378244	1	WASHER, M10,
9	86514720	1	NUT, LOCK, M10
10	450146	1	TIE-ROD,
11	322901	1	PIN,
12	130003	1	PIN, SPLIT (COTTER), M3.2 x 20,
13	447454	1	LEVER, , -C5620
13	84021031	1	LEVER, (17), D5620-
14	321204	1	NIPPLE, LUBE, M6 x 1, 16mm lg,
15	370006	1	RING, SNAP,
16	364908	2	BEARING ASSY,
17	429232	2	SLEEVE, , D5620-
18	447054	1	PULLEY,
19	9706690	3	NUT, M8, Cl 8,
20	322358	3	WASHER, SPRING, Belleville, M8,
21	426717	2	HALF-PULLEY,
22	443898	1	BEARING, BALL,
24	370002	1	RING, SNAP, M25, Ext, , -C5620
25	9513620	1	BELT, TRANSMISSION, , FOR BLOCKED FRAME ONLY
25	230164	1	BELT, TRANSMISSION, , FOR FIXED SHOE ONLY
26	378246	1	WASHER, 16MM, D5620-
27	140048	1	WASHER, SPRING, Belleville, M16, , D5620-
28	100020	1	NUT, M16, Cl 8, , D5620-
29	350616	1	SCREW, Hex, M16 x 90, 8.8,
30	441111	1	BUSHING,
23	16043224	3	BOLT, Hex, M8 x 16, 8.8, Full Thd,

04.20(01) SHAKER SHOE DRIVE, FIXED SHOE AND BLOCKED FRAME

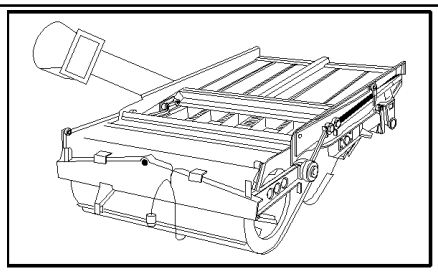

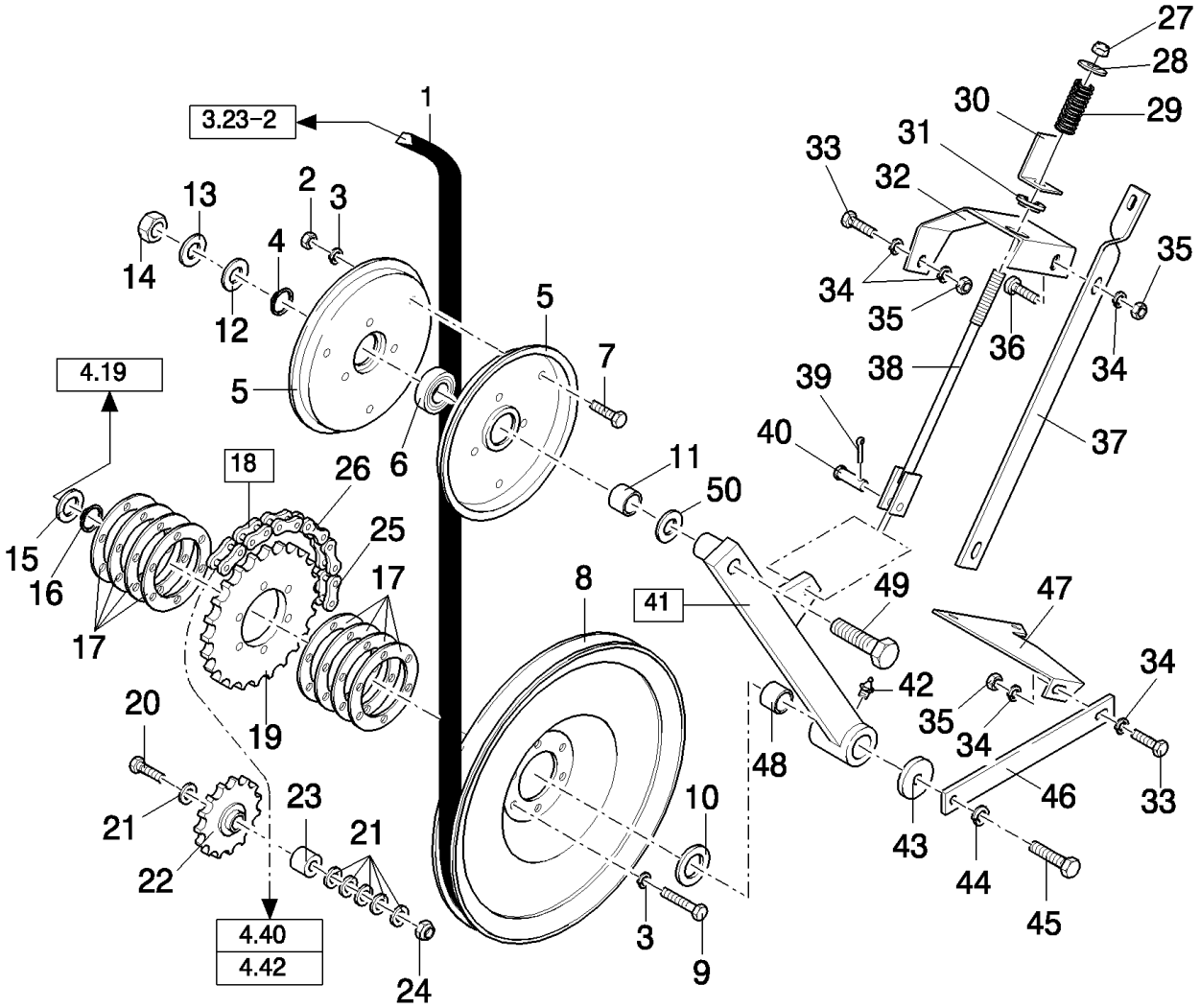

TX68 COMBINE - BASE UNIT

04.20(01) SHAKER SHOE DRIVE, FIXED SHOE AND BLOCKED FRAME

ссылка	Номер детали	Кол-во	Описание
1	446780	1	BELT, TRANSMISSION,
2	9706690	6	NUT, M8, Cl 8,
3	322358	1	WASHER, SPRING, Belleville, M8,
4	370002	1	RING, SNAP, M25, Ext, , -C5620
5	434227	2	PULLEY, , -C1151
5	426717	2	HALF-PULLEY, , D1152-
6	443898	1	BEARING, BALL,
8	454500	1	PULLEY,
9	43129	6	BOLT, Hex, M8 x 40, 8.8,
10	140184	1	WASHER, 31MM
11	441111	1	BUSHING, , D5620-
12	378246	1	WASHER, 16MM, D5620-
13	140048	1	WASHER, SPRING, Belleville, M16, , D5620-
14	100020	1	NUT, M16, Cl 8, , D5620-
15	80922593	1	PLATE, ADJUSTING,
16	11068376	1	RING, SNAP, M35, Ext x 1.5 Thk,
17	89510563	8	PLATE, ADJUSTING,
18	9509149	1	CHAIN, (25), FOR BLOCKED FRAME ONLY, -C5410
18	84000317	1	CHAIN, (26), FOR BLOCKED FRAME ONLY, D5410-
18	84000317	1	CHAIN, (26), FOR FIXED SHOE ONLY
19	919557	1	SPROCKET, DRIVEN,
20	300512	1	SCREW, Hex, M12 x 55, 8.8,
21	378245	6	WASHER, M12,
22	9507227	1	SPROCKET, DRIVEN, , -C5410
22	9831670	1	SPROCKET, , D5410-
23	431990	1	BUSHING, , -C5410
23	84022798	1	BUSHING, , D5410-
24	412126	1	NUT, LOCK, M12 x 1.75, Cl 8,
25	241-1716	1	
26	165590	1	LINK, CONNECTING,
27	86514720	1	NUT, LOCK, M10
28	140042	1	WASHER, M10 x 34 x 3,
28	306506	1	WASHER, 11MM
29	84814907	1	SPRING,
30	434226	1	INDICATOR, , -C5410
30	84022773	1	INDICATOR, , D5410-
31	439857	1	BUSHING,
32	9508641	1	SUPPORT,
33	120104	24	SCREW, Hex, M8 x 20, 8.8,
34	322358	5	WASHER, SPRING, Belleville, M8,
35	9706690	4	NUT, M8, Cl 8,
36	86507486	1	BOLT, CARRIAGE, Short NK, M8 x 20, Cl8.8, Full Thd,
37	919645	1	SUPPORT,
38	450145	1	ROD, ADJUSTMENT,

TX68 COMBINE - BASE UNIT

04.20(01) SHAKER SHOE DRIVE, FIXED SHOE AND BLOCKED FRAME

ссылка	Номер детали	Кол-во	Описание
39	130003	1	PIN, SPLIT (COTTER), M3.2 x 20,
40	322901	1	PIN,
41	447450	1	LEVER, , -C5620
41	84021030	1	LEVER, (48), D5620-
42	321204	1	NIPPLE, LUBE, M6 x 1, 16mm lg,
43	9511932	1	WASHER,
44	140045	1	WASHER, SPRING, Belleville, M10,
45	43140	1	BOLT, Hex, M10 x 30, 8.8, Full Thd,
46	450149	1	SUPPORT,
47	450144	1	SUPPORT, , FOR BLOCKED FRAME ONLY
47	84012069	1	SUPPORT, , FOR FIXED SHOE ONLY
48	420434	2	BUSHING, , D5620-
49	350616	1	SCREW, Hex, M16 x 90, 8.8,
50	140090	1	WASHER, , D1152-
7	16043224	6	BOLT, Hex, M8 x 16, 8.8, Full Thd,

04.21(01) FAN

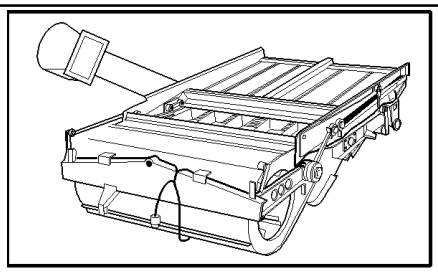

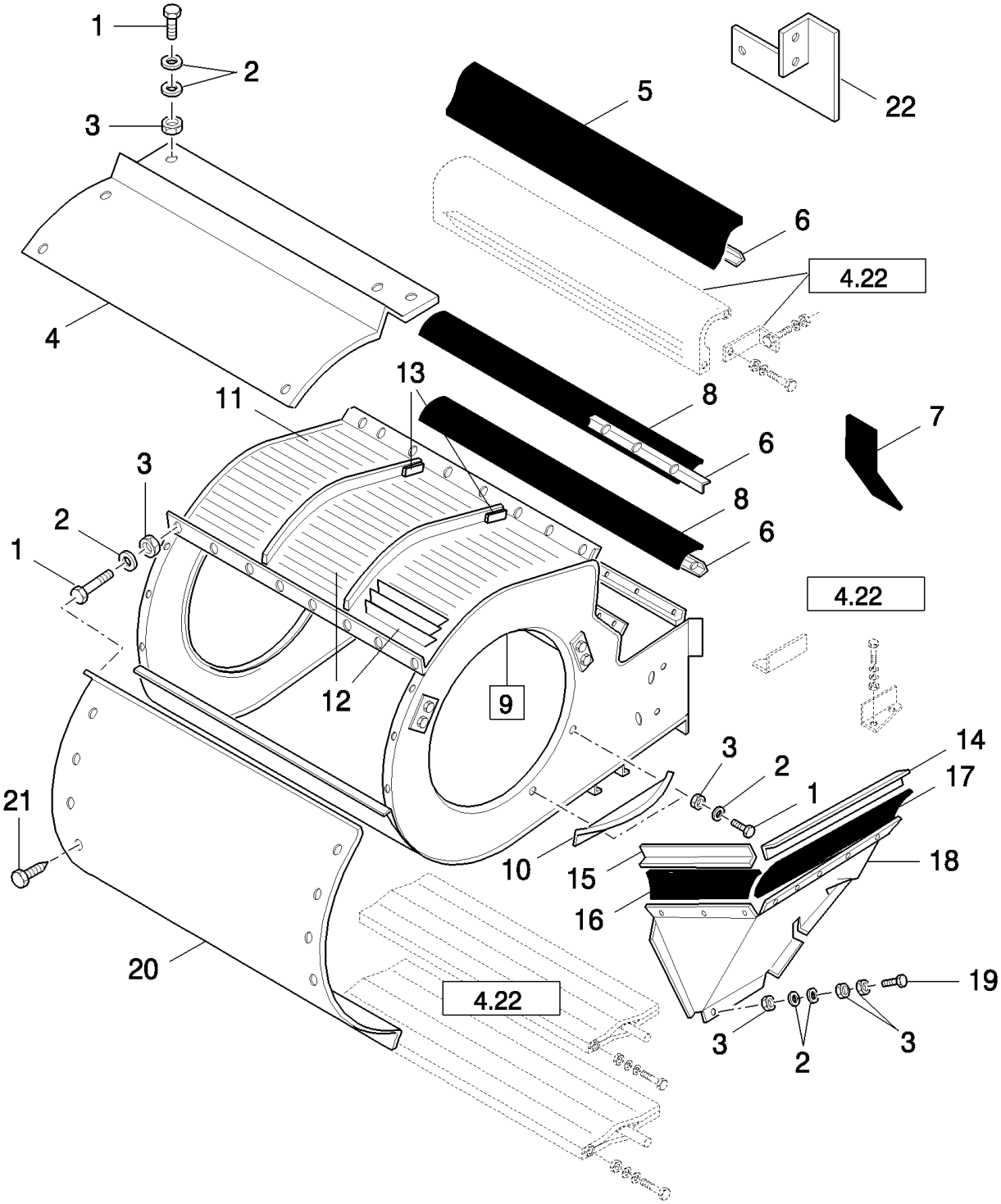
1
2
3
4
5
6
4.22
22
7
8
6
8
6
11
13
3
2
1
12
9
4.22
14
17
3
2
1
21
10
15
18
16
20
19
4.22
3
2
3

TX68 COMBINE - BASE UNIT

04.21(01) FAN

ссылка	Номер детали	Кол-во	Описание
1	80120099	AR	BOLT, Hex, M6 x 16, 8.8,
2	322357	AR	WASHER, SPRING, Belleville, M6,
3	15896221	AR	NUT, M6, Cl 10,
4	751310	1	PLATE, COVER, , FOR TX66-68 ONLY, ACCESSORY, -C4620
5	9501642	1	CANVAS, , FOR TX66-67-68 ONLY
5	918263	1	CANVAS, , FOR TX62-63-64-65 ONLY
6	747558	3	STRIP, , FOR TX66-67-68 ONLY
6	451800	3	PLATE, FIXING, , FOR TX62-63-64-65 ONLY
7	84062361	2	CANVAS, , -C1205
7	84071827	2	SEAL, , D1206-
8	9501641	2	CANVAS, , FOR TX66-67-68 ONLY
8	918145	2	CANVAS, , FOR TX62-63-64-65 ONLY
9	9506765	1	HOUSING, FAN, (11 to 13), FOR TX66-67-68 ONLY, -C1205
9	84431365	1	HOUSING, FAN, , FOR TX66-67-68 ONLY, D1206-
9	918136	1	HOUSING, FAN, (11 to 13), FOR TX62-63-64-65 ONLY, -C1205
9	84431366	1	HOUSING, FAN, , FOR TX62-63-64-65 ONLY, D1206-
10	9819456	2	DEFLECTOR, , -C1205
11	84015242	1	PLATE, LH, WELDED PARTS
12	84014309	5	PLATE, , WELDED PARTS, FOR TX66-67-68 ONLY
12	84014309	4	PLATE, , FOR TX62-63-64-65 ONLY, WELDED PARTS
13	84032088	4	PLATE, COVER, , WELDED PARTS, FOR TX66-67-68 ONLY
13	84032088	3	PLATE, COVER, , FOR TX62-63-64-65 ONLY, WELDED PARTS
14	446268	1	PLATE, FIXING, LH, FOR SELF-LEVELLING ONLY
14	446269	1	PLATE, FIXING, RH, FOR SELF-LEVELLING ONLY
15	441629	1	PLATE, FIXING, LH, FOR SELF-LEVELLING ONLY
15	9850791	1	PLATE, FIXING, RH, FOR SELF-LEVELLING ONLY
16	9819452	1	CANVAS, LH, FOR SELF-LEVELLING ONLY
16	9833905	1	CANVAS, RH, FOR SELF-LEVELLING ONLY
17	9850790	1	CANVAS, LH, FOR SELF-LEVELLING ONLY
17	9833904	1	CANVAS, RH, FOR SELF-LEVELLING ONLY
18	9838043	1	SHIELD, LH
18	9812483	1	SHIELD, RH
19	86977786	8	BOLT, Hex, M6 x 25, 8.8,
20	9506766	1	COVER, , FOR TX66-67-68 ONLY
20	918160	1	COVER, , FOR TX62-63-64-65 ONLY
21	353075	6	SCREW,
22	9513822	1	PLATE, LH, FOR FIXED SHOE ONLY
22	9513823	1	PLATE, RH, FOR FIXED SHOE ONLY

04.22(01) FAN

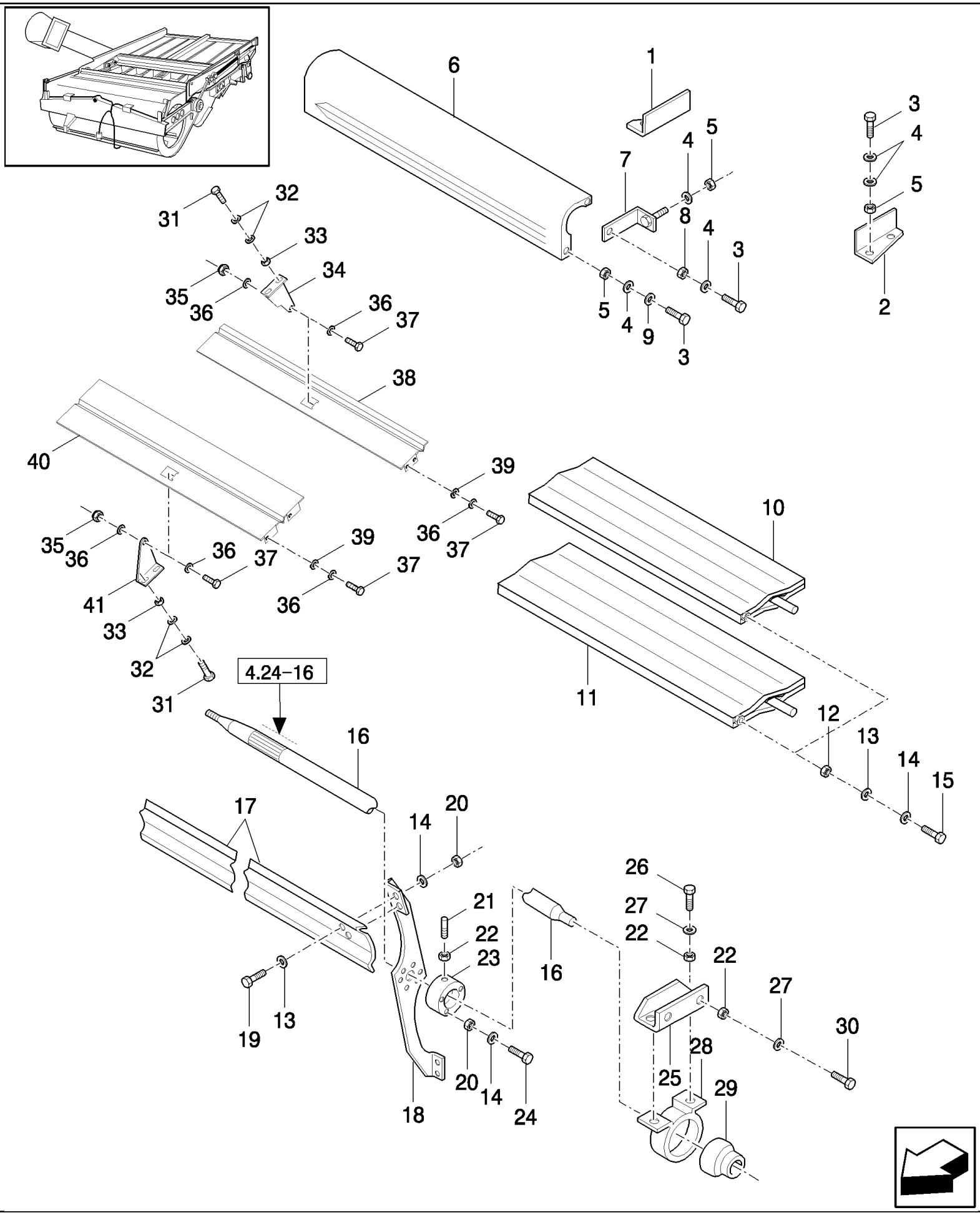
1
2
3
4
5
6
7
8
9
10
11
12
13
14
15
16
17
18
19
20
21
22
23
24
25
26
27
28
29
30
31
32
33
34
35
36
37
38
39
40
41
4.24-16

TX68 COMBINE - BASE UNIT

04.22(01) FAN

ссылка	Номер детали	Кол-во	Описание
1	9837733	1	DEFLECTOR, LH, BSN C375
1	84334751	1	DEFLECTOR, LH, ASN D376
2	9837734	1	DEFLECTOR, RH, BSN C375
2	84334742	1	DEFLECTOR, RH, ASN D376
3	80120099	10	BOLT, Hex, M6 x 16, 8.8,
4	322357	14	WASHER, SPRING, Belleville, M6,
5	15896221	10	NUT, M6, Cl 10,
6	747556	1	PLATE, , FOR TX66-67-68 ONLY, BSN C375
6	84320550	1	PLATE, , FOR TX66-67-68 ONLY, ASN D376
6	80918147	1	PLATE, , FOR TX62-64-65 ONLY, BSN C375
6	84320548	1	PLATE, , FOR TX62-64-65 ONLY, ASN D376
7	438906	2	SUPPORT,
8	353308	2	NUT, M6 x 1, Cl 8,
9	412649	4	WASHER, SPRING, Belleville, M6,
10	747568	1	BUSHING, , FOR TX66-67-68 ONLY, -C1205
10	918149	1	DEFLECTOR, , FOR TX62-63-64-65 ONLY, -C1205
11	747566	1	DEFLECTOR, , FOR TX66-67-68 ONLY, -C1205
11	80918151	1	DEFLECTOR, , FOR TX62-63-64-65 ONLY, -C1205
12	378243	4	WASHER, M8, , -C1205
13	140041	40	WASHER, M8 x 28 x 3, , -C1205
14	322358	49	WASHER, SPRING, Belleville, M8, , -C1205
16	9502397	1	SHAFT, , FOR TX66-67-68 ONLY
16	9502831	1	SHAFT, , FOR TX62-63-64-65 ONLY
17	747571	6	BLADE, TILLAGE, , FOR TX66-67-68 ONLY
17	918144	6	BLADE, TILLAGE, , FOR TX62-63-64-65 ONLY
18	747570	9	SUPPORT,
19	120104	36	SCREW, Hex, M8 x 20, 8.8,
20	9706690	45	NUT, M8, Cl 8,
21	391136	3	SET SCREW, Hex Soc, M10 x 40, M10x40
22	100016	11	NUT, M10, Cl 8,
23	393760	3	BUSHING,
24	43130	9	BOLT, Hex, M8 x 50, 8.8,
25	748996	1	SUPPORT, RH, FOR FIXED SHOE ONLY, -C5550
25	84022989	1	SUPPORT, RH, FOR FIXED SHOE ONLY, D5550-
25	748996	1	SUPPORT, RH, FOR SELF-LEVELLING ONLY
25	920848	1	SUPPORT, LH, FOR FIXED SHOE ONLY, -C5550
25	920848	1	SUPPORT, LH, FOR SELF-LEVELLING ONLY, -C5550
25	84043845	1	SUPPORT, LH, FOR FIXED SHOE ONLY, D5550-
25	84022989	1	SUPPORT, LH, FOR SELF-LEVELLING ONLY, D5550-
26	43140	8	BOLT, Hex, M10 x 30, 8.8, Full Thd,
27	140045	8	WASHER, SPRING, Belleville, M10,
28	410433	1	HOUSING, BEARING, LH
28	748907	1	HOUSING, BEARING, RH
29	212606	1	BEARING ASSY, LH

TX68 COMBINE - BASE UNIT

04.22(01) FAN

ссылка	Номер детали	Кол-во	Описание
29	455805	1	BEARING, BALL, RH
30	11106231	2	BOLT, Hex, M10 x 25, 10.9, Full Thd,
31	86508568	AR	SCREW, Hex, M6 x 16, 8.8,
32	412649	AR	WASHER, SPRING, Belleville, M6,
33	15896221	AR	NUT, M6, Cl 10,
34	84334663	1	SUPPORT,
35	86629542	2	NUT, LOCK, M8 x 1.25, Cl 8,
36	322358	AR	WASHER, SPRING, Belleville, M8,
38	84431364	1	DEFLECTOR, , FOR TX66-67-68 ONLY, BSN C375
38	84072806	1	DEFLECTOR, , FOR TX66-67-68 ONLY, ASN D376
38	84431363	1	DEFLECTOR, , FOR TX62-63-64-65 ONLY, BSN C375
38	84072808	1	DEFLECTOR, , FOR TX62-63-64-65 ONLY, ASN D376
39	140041	AR	WASHER, M8 x 28 x 3,
40	84431362	1	DEFLECTOR, , FOR TX66-67-68 ONLY, BSN C375
40	84334129	1	DEFLECTOR, , FOR TX66-67-68 ONLY, ASN D376
40	84431361	1	DEFLECTOR, , FOR TX62-63-64-65 ONLY, BSN C375
40	84334733	1	DEFLECTOR, , FOR TX62-63-64-65 ONLY, ASN D376
41	84072631	1	SUPPORT,
15	16043224	4	BOLT, Hex, M8 x 16, 8.8, Full Thd, , -C1205
37	16043224	AR	BOLT, Hex, M8 x 16, 8.8, Full Thd,

04.23(01) CLEANING SHOE FAN GUARD

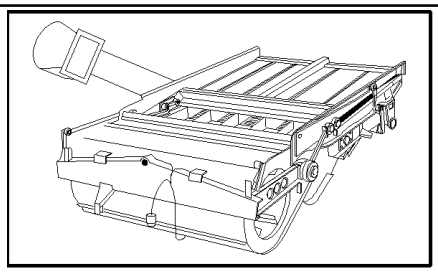

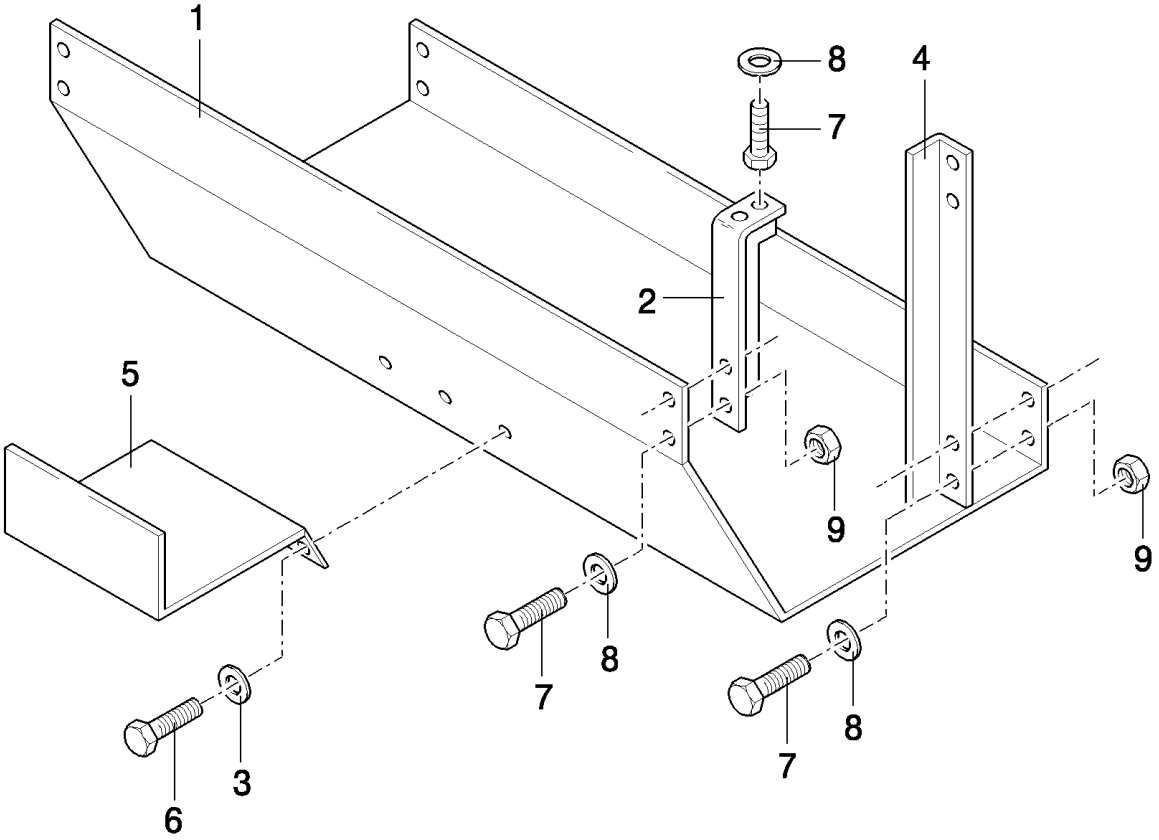

TX68 COMBINE - BASE UNIT

04.23(01) CLEANING SHOE FAN GUARD

ссылка	Номер детали	Кол-во	Описание
1	9839478	1	PLATE, , FOR TX66-67-68 ONLY
1	9839479	1	PLATE, , FOR TX62-63-64-65 ONLY
2	430622	2	BRACKET, , FOR SELF-LEVELLING ONLY
2	920068	2	SUPPORT, , FOR FIXED SHOE ONLY
3	322358	6	WASHER, SPRING, Belleville, M8, , FOR SELF-LEVELLING ONLY
4	457671	2	BRACKET, , FOR SELF-LEVELLING ONLY
4	84022683	2	SUPPORT, , FOR FIXED SHOE ONLY
5	9835991	1	PLATE, , FOR SELF-LEVELLING ONLY
7	11106231	16	BOLT, Hex, M10 x 25, 10.9, Full Thd,
8	140045	16	WASHER, SPRING, Belleville, M10,
9	100016	16	NUT, M10, Cl 8,
6	16043224	3	BOLT, Hex, M8 x 16, 8.8, Full Thd, , FOR SELF-LEVELLING ONLY

04.24(01) FAN VARI-DRIVE

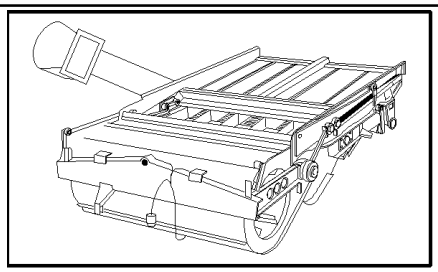

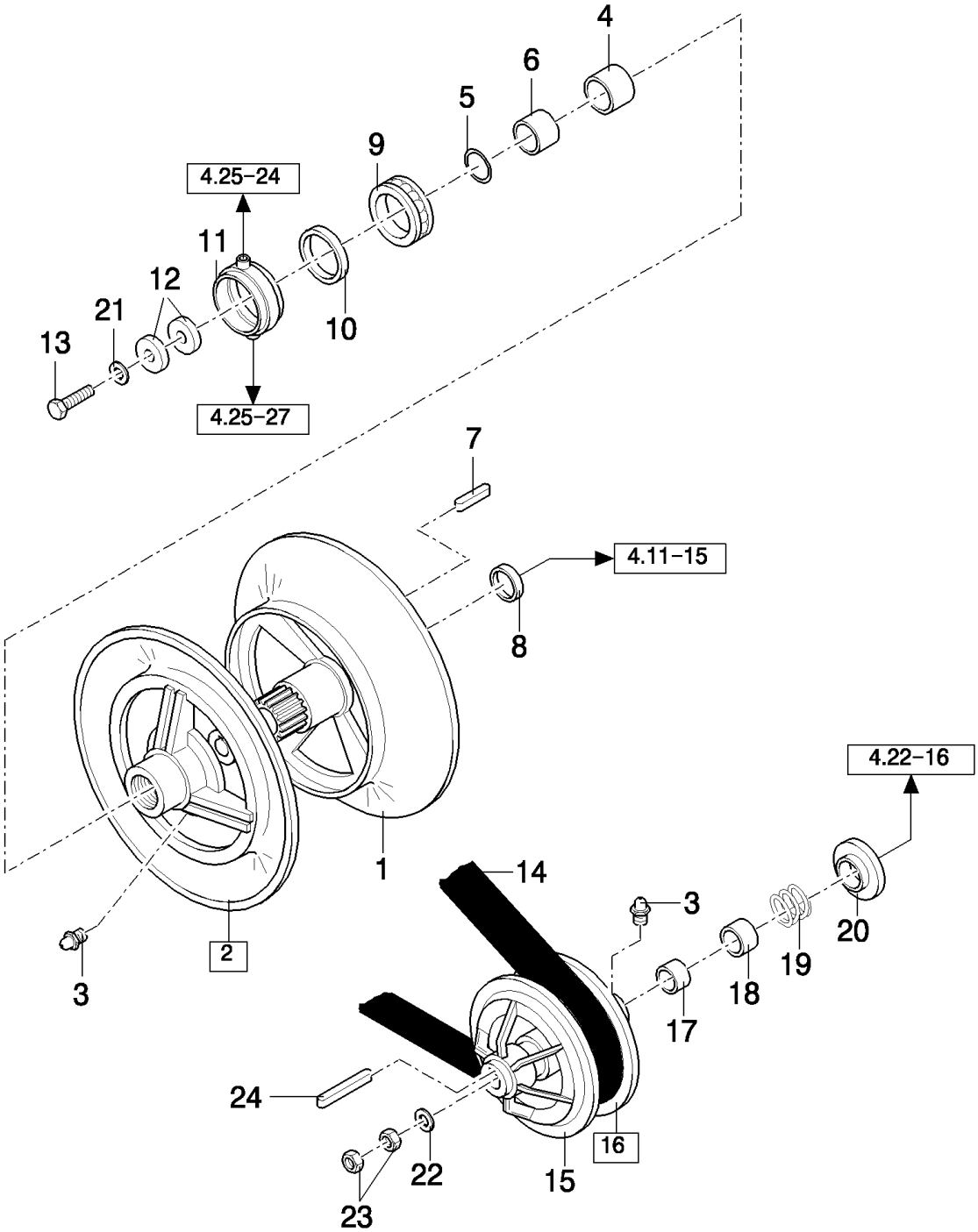

TX68 COMBINE - BASE UNIT

04.24(01) FAN VARI-DRIVE

ссылка	Номер детали	Кол-во	Описание
1	9832767	1	DISC, , BSN C315
1	84818362	1	DISC, , ASN D316
2	9502482	1	DISC, (3 to 6)
3	321204	2	NIPPLE, LUBE, M6 x 1, 16mm lg,
4	89502347	1	SLEEVE,
5	84814916	1	O-RING,
6	9503683	1	SLEEVE,
7	170035	1	KEY,
8	9832773	1	SPACER, , FOR SELF-LEVELLING AND BLOCKED FRAME ONLY
9	385803	1	BEARING ASSY,
10	9502933	1	GASKET, , BSN C315
10	84818400	1	GASKET, , ASN D316
11	9502934	1	HOUSING, BEARING, , BSN C315
11	84078831	1	HOUSING, BEARING, , ASN D316
12	140083	2	WASHER, 11MM
13	120070	1	BOLT, Hex, M10 x 60, 8.8,
14	84817627	1	BELT, TRANSMISSION, , FOR SELF-LEVELLING AND BLOCKED FRAME ONLY
14	919739	1	BELT, TRANSMISSION, , FOR FIXED SHOE ONLY
15	9502399	1	HALF-PULLEY, , BSN C315
15	84818348	1	DISC, , ASN D316
16	9502481	1	DISC, (3,17,18), BSN C315
16	84818361	1	DISC, (3,17,18), ASN D316
17	419621	1	BUSHING,
18	429232	1	SLEEVE,
19	388166	1	SPRING,
20	913044	1	WASHER,
21	140045	1	WASHER, SPRING, Belleville, M10,
22	9506874	1	WASHER, 22MM
23	100085	2	NUT, M20 x 1.5, Cl 8,
24	170050	1	KEY,

04.25(01) FAN VARI-DRIVE

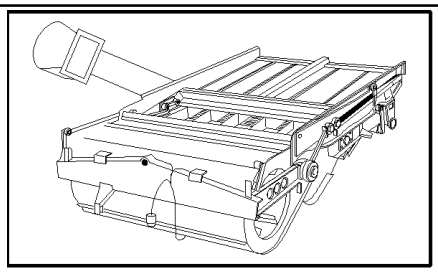

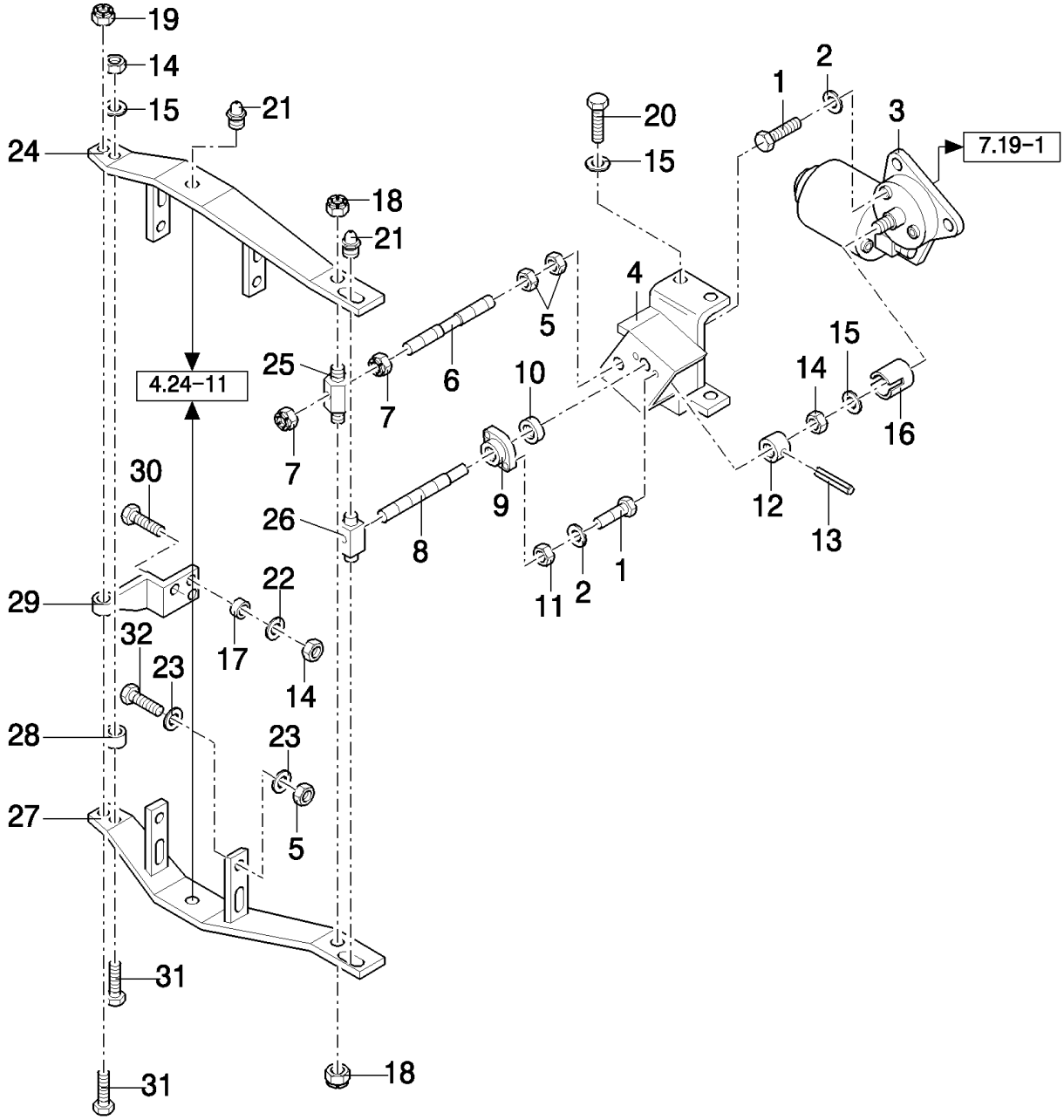

TX68 COMBINE - BASE UNIT

04.25(01) FAN VARI-DRIVE

ссылка	Номер детали	Кол-во	Описание
1	80120099	5	BOLT, Hex, M6 x 16, 8.8,
2	322357	5	WASHER, SPRING, Belleville, M6,
3	9507880	1	MOTOR, ELECTRIC,
4	9506590	1	BRACKET, , FOR SELF-LEVELLING ONLY
4	80919776	1	SUPPORT, , FOR FIXED SHOE ONLY
5	100016	6	NUT, M10, Cl 8,
6	397559	1	STUD,
7	86514720	2	NUT, LOCK, M10
8	9811471	1	SHAFT,
9	443794	1	HOUSING, BEARING,
10	412431	1	BEARING ASSY,
11	15896221	2	NUT, M6, Cl 10,
12	9811470	1	BUSHING,
13	300869	1	PIN, LOCK, M6 x 40, Slotted,
14	9706690	4	NUT, M8, Cl 8,
15	322358	6	WASHER, SPRING, Belleville, M8,
16	437642	1	BUSHING,
17	309101	2	SPACER, , FOR SELF-LEVELLING ONLY
18	100037	2	NUT, M10 x 1.5, Cl 8,
19	86629542	1	NUT, LOCK, M8 x 1.25, Cl 8,
20	120104	4	SCREW, Hex, M8 x 20, 8.8,
20	43127	4	BOLT, Hex, M8 x 25, 8.8,
21	321204	2	NIPPLE, LUBE, M6 x 1, 16mm lg,
22	412650	2	WASHER, Belleville, M8,
23	140045	4	WASHER, SPRING, Belleville, M10,
24	9502967	1	ARM,
24	84818407	1	ARM,
25	437653	1	ADJUSTER,
26	443796	1	ADJUSTER,
27	9502969	1	ARM,
27	84818408	1	ARM,
28	334056	1	BUSHING,
29	9502974	1	SUPPORT, , FOR SELF-LEVELLING ONLY
29	84818410	1	SUPPORT,
29	80919763	1	SUPPORT, , FOR FIXED SHOE ONLY
30	43465	2	BOLT, CARRIAGE, Short NK, M8 x 30, Cl8.8, Full Thd,
31	43130	2	BOLT, Hex, M8 x 50, 8.8,
32	11106231	4	BOLT, Hex, M10 x 25, 10.9, Full Thd,

04.26(01) STRAW WALKER DRIVE

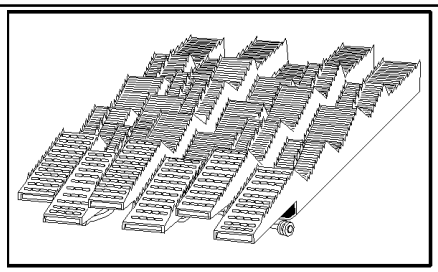

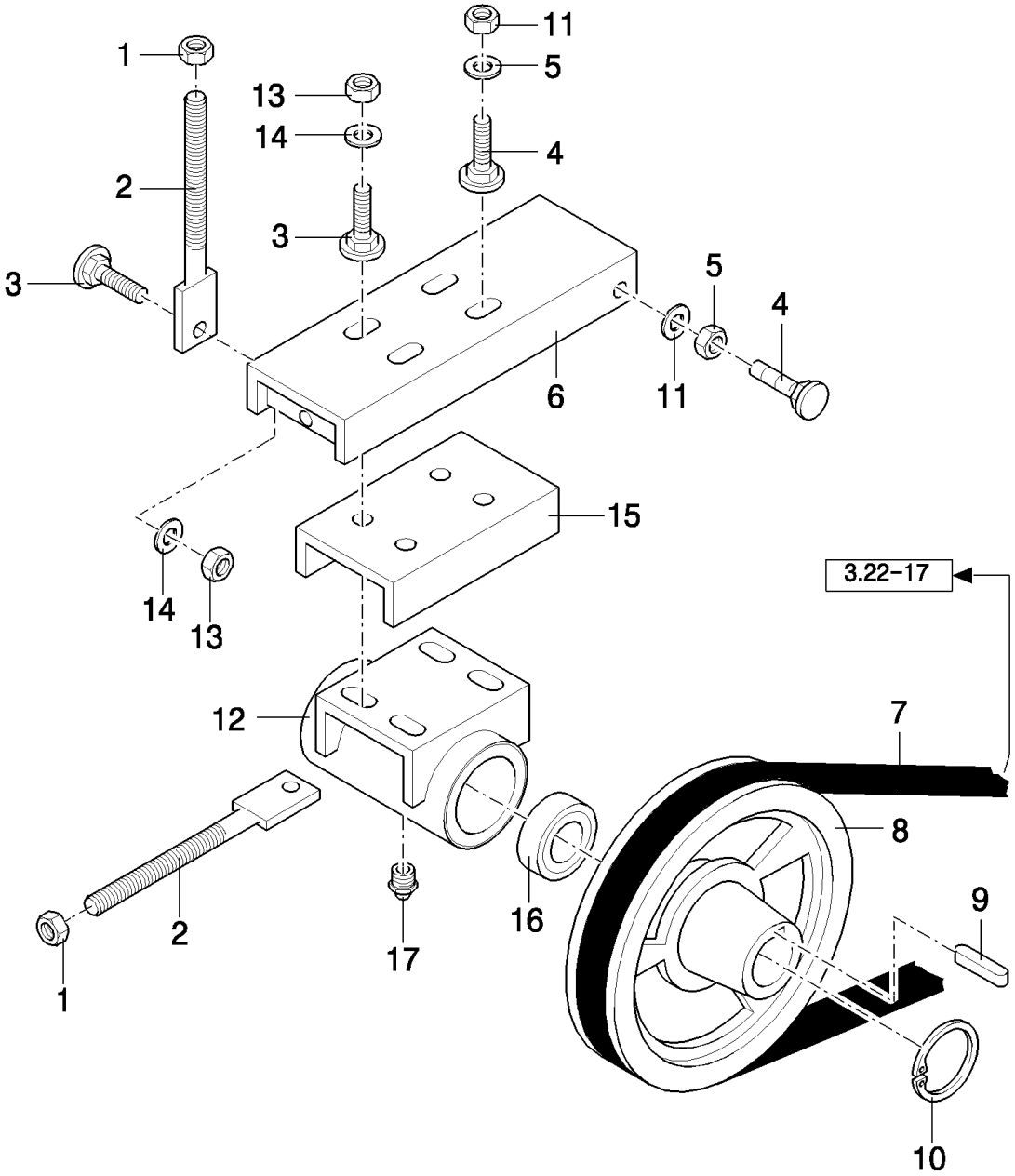

TX68 COMBINE - BASE UNIT

04.26(01) STRAW WALKER DRIVE

ссылка	Номер детали	Кол-во	Описание
1	412126	2	NUT, LOCK, M12 x 1.75, Cl 8,
2	918881	2	ROD, ADJUSTMENT,
3	120044	2	BOLT, CARRIAGE, Short NK, M12 x 30, Cl8.8, Full Thd,
4	338949	2	BOLT, CARRIAGE, Short NK, M10 x 25, Cl8.8, Full Thd,
5	140045	2	WASHER, SPRING, Belleville, M10,
6	754744	1	SUPPORT,
7	84817625	1	BELT, TRANSMISSION,
8	9832779	1	PULLEY,
9	170030	1	KEY, M8 x 7 x 32, Par,
10	370002	1	RING, SNAP, M25, Ext,
11	100016	22	NUT, M10, Cl 8,
12	754741	1	SUPPORT,
13	337475	2	NUT, M12, Cl 10,
14	140046	2	WASHER, Belleville, M12,
15	9503852	1	PLATE,
16	84057966	1	BEARING, BALL,
17	321204	1	NIPPLE, LUBE, M6 x 1, 16mm lg,

04.27(01) STRAW WALKER DRIVE

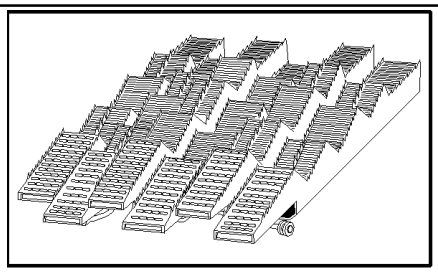

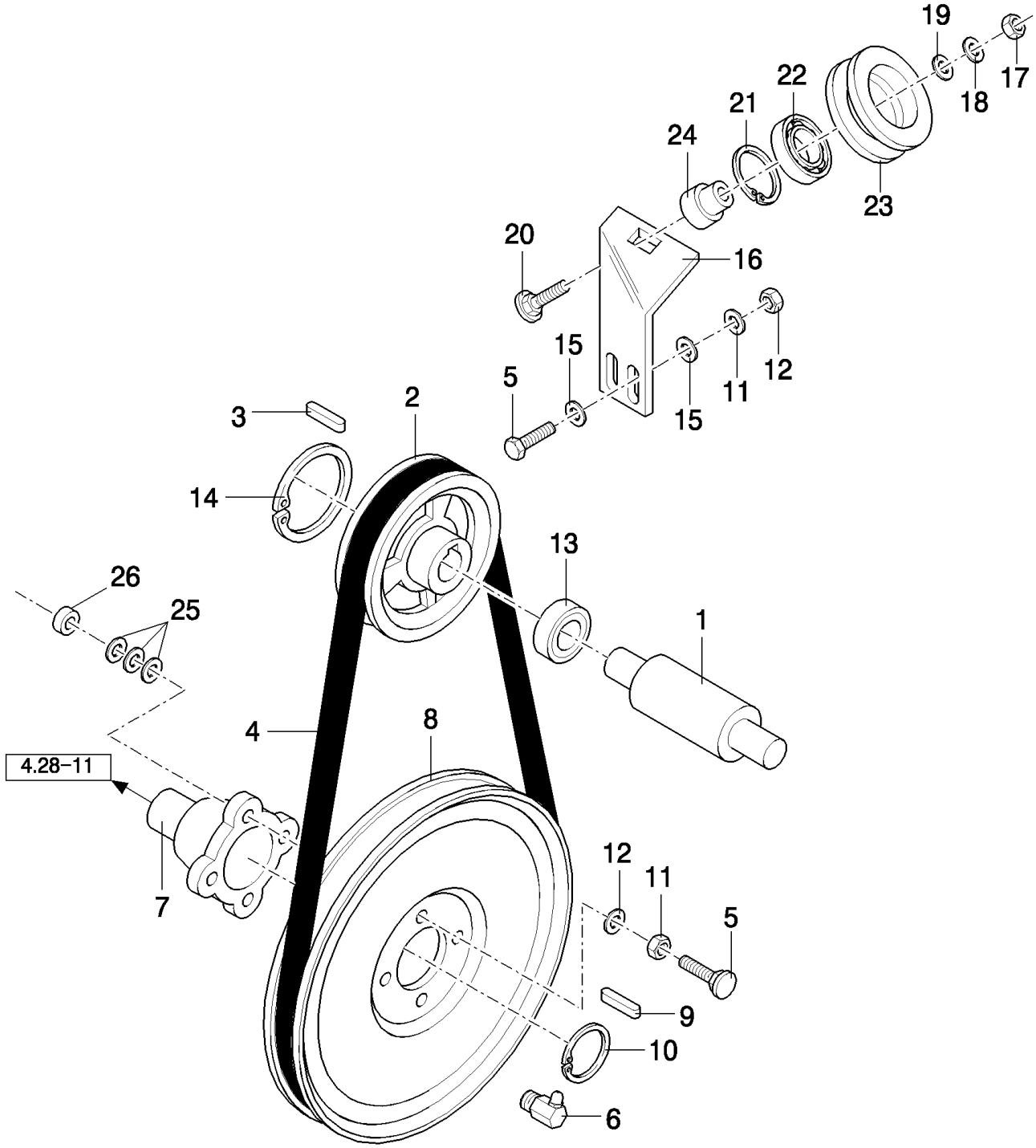

TX68 COMBINE - BASE UNIT

04.27(01) STRAW WALKER DRIVE

ссылка	Номер детали	Кол-во	Описание
1	9512696	1	SHAFT,
2	920294	1	PULLEY,
3	170005	1	KEY,
4	84817624	1	BELT, TRANSMISSION,
5	43140	6	BOLT, Hex, M10 x 30, 8.8, Full Thd, , -C1135
5	120070	4	BOLT, Hex, M10 x 60, 8.8, , D1136-
6	321204	1	NIPPLE, LUBE, M6 x 1, 16mm lg,
7	754353	1	FLANGE,
8	320866	1	PULLEY,
9	170010	1	KEY,
10	370003	1	RING, SNAP, M30, Ext,
11	140045	6	WASHER, SPRING, Belleville, M10,
12	100016	6	NUT, M10, Cl 8,
13	84057966	1	BEARING, BALL,
14	370002	1	RING, SNAP, M25, Ext,
15	447336	4	WASHER, 11MM
16	9506954	1	SUPPORT, , WITH VARIABLE BEATER DRIVE ONLY
16	84038075	1	BRACKET, , WITH CONSTANT BEATER DRIVE ONLY
17	100020	1	NUT, M16, Cl 8,
18	140048	1	WASHER, SPRING, Belleville, M16,
19	140190	1	WASHER, 17MM
20	120046	1	BOLT, CARRIAGE, Short NK, M16 x 60, Cl8.8, Full Thd,
21	370011	1	RING, SNAP, M52, Int,
22	443898	1	BEARING, BALL,
23	9506953	1	PULLEY,
24	200071	1	BUSHING,
25	86511323	12	WASHER, M10 x 20 x 2, , D1136-
26	921371	4	RING, , D1136-

04.28(01) STRAW WALKER SHAFTS

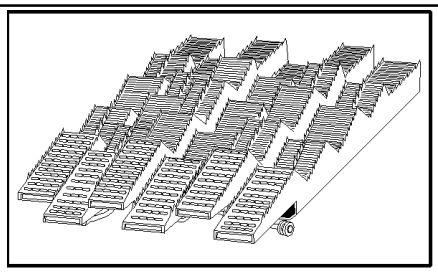

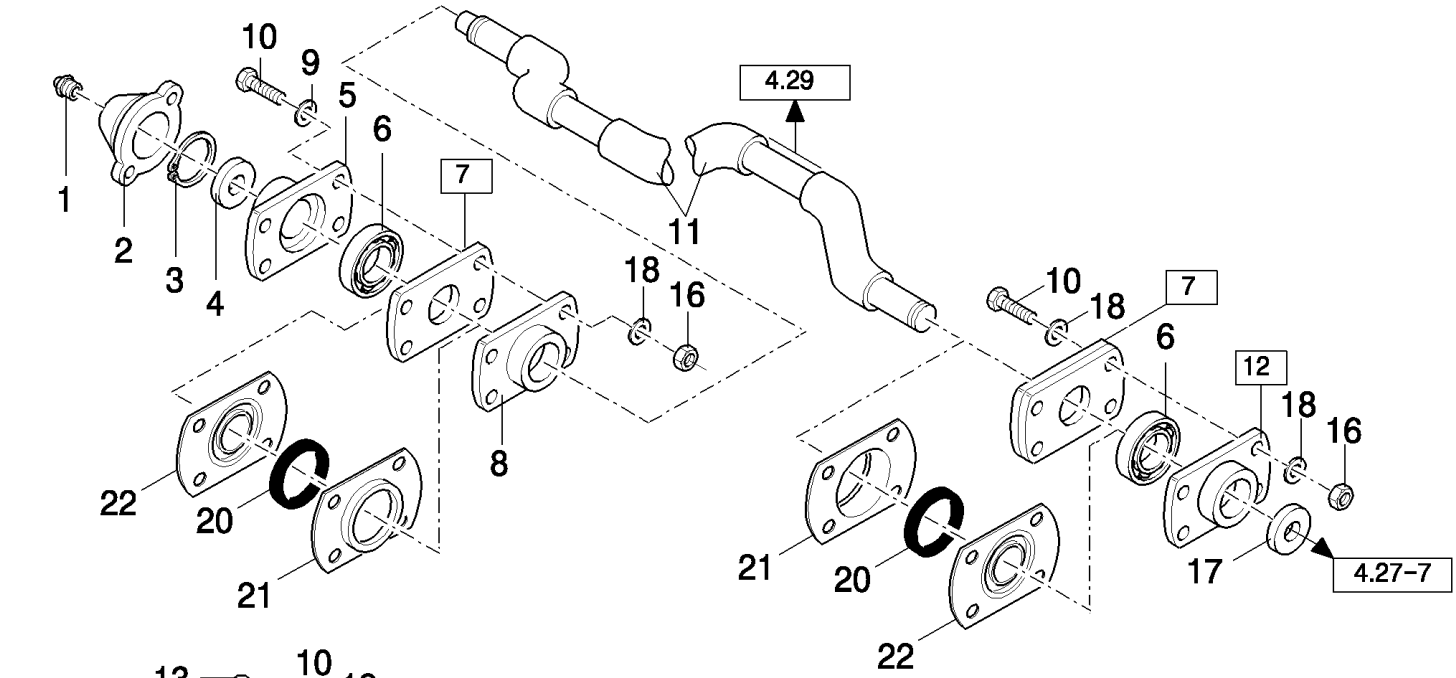

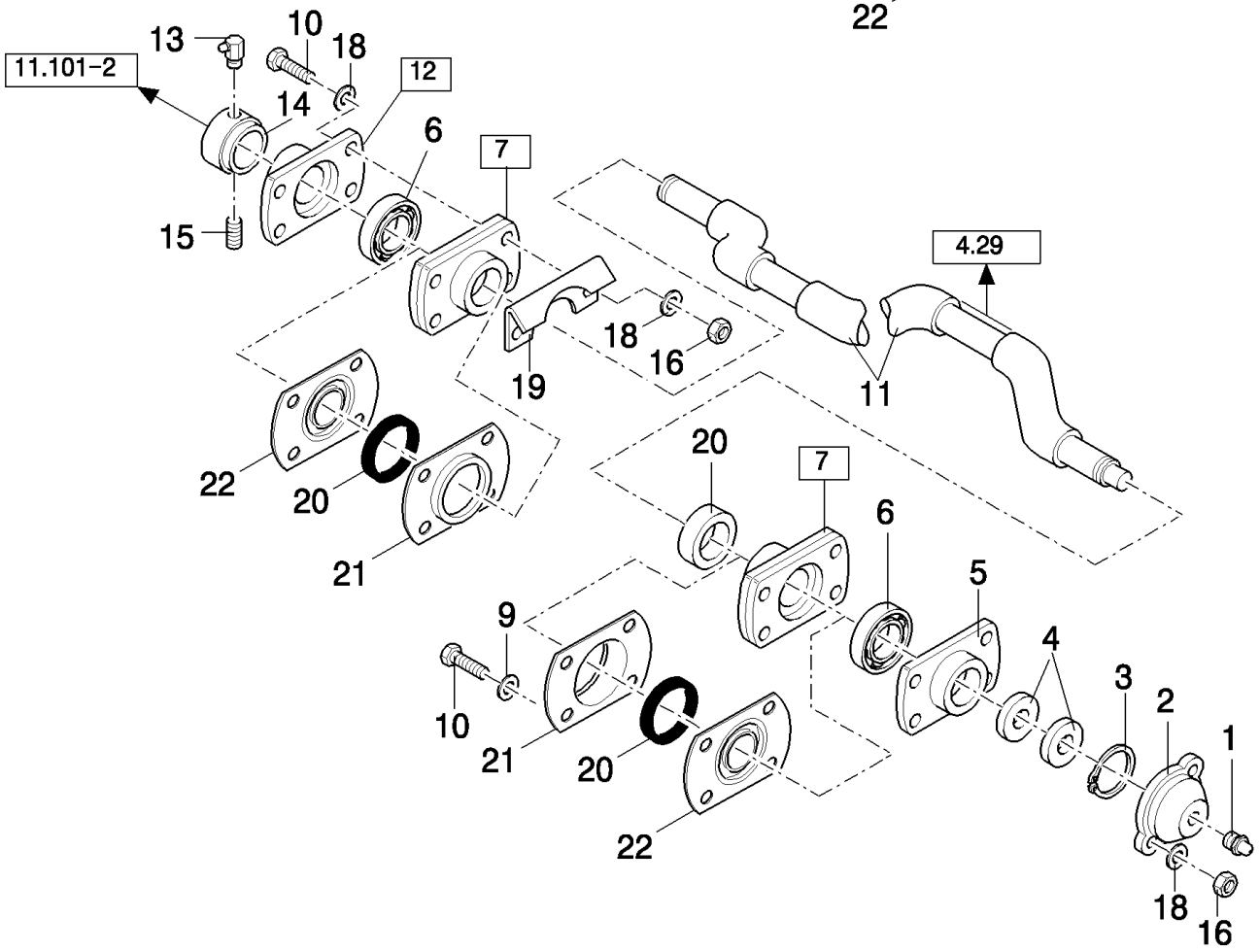

TX68 COMBINE - BASE UNIT

04.28(01) STRAW WALKER SHAFTS

ссылка	Номер детали	Кол-во	Описание
1	332038	2	NIPPLE, LUBE,
2	310067	2	COVER,
3	370003	2	RING, SNAP, M30, Ext,
4	140108	AR	WASHER, 31MM
5	9511041	2	FLANGE,
6	210033	4	BEARING, BALL,
7	310051	4	COVER, (20), -C1135
8	918328	1	FLANGE,
9	140160	8	WASHER, LOCK, Int T, M8
10	120104	16	SCREW, Hex, M8 x 20, 8.8,
11	387205	2	SHAFT, , FOR TX66-67-68 ONLY
11	391092	2	SHAFT, , FOR TX62-63-64-65 ONLY
12	310049	2	HOUSING, BEARING, (17)
13	332040	1	NIPPLE, LUBE, 90є, 1/8" NPT x .84" lg,
14	300014	1	COLLAR,
15	300480	1	SET SCREW, Hex Soc, M10 x 12, Cup Pt,
16	9706690	12	NUT, M8, Cl 8,
17	220063	2	SEAL, FELT,
18	322358	20	WASHER, SPRING, Belleville, M8,
19	84041119	2	PLATE, COVER,
20	220061	4	GASKET,
21	310056	4	COVER, , D1136-
22	310055	4	COVER, , D1136-

04.29(01) STRAW WALKER BEARINGS

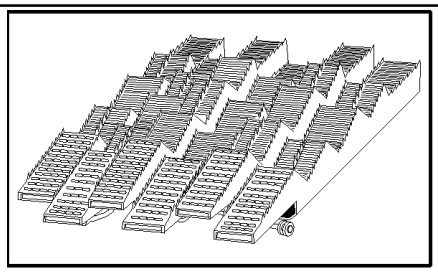

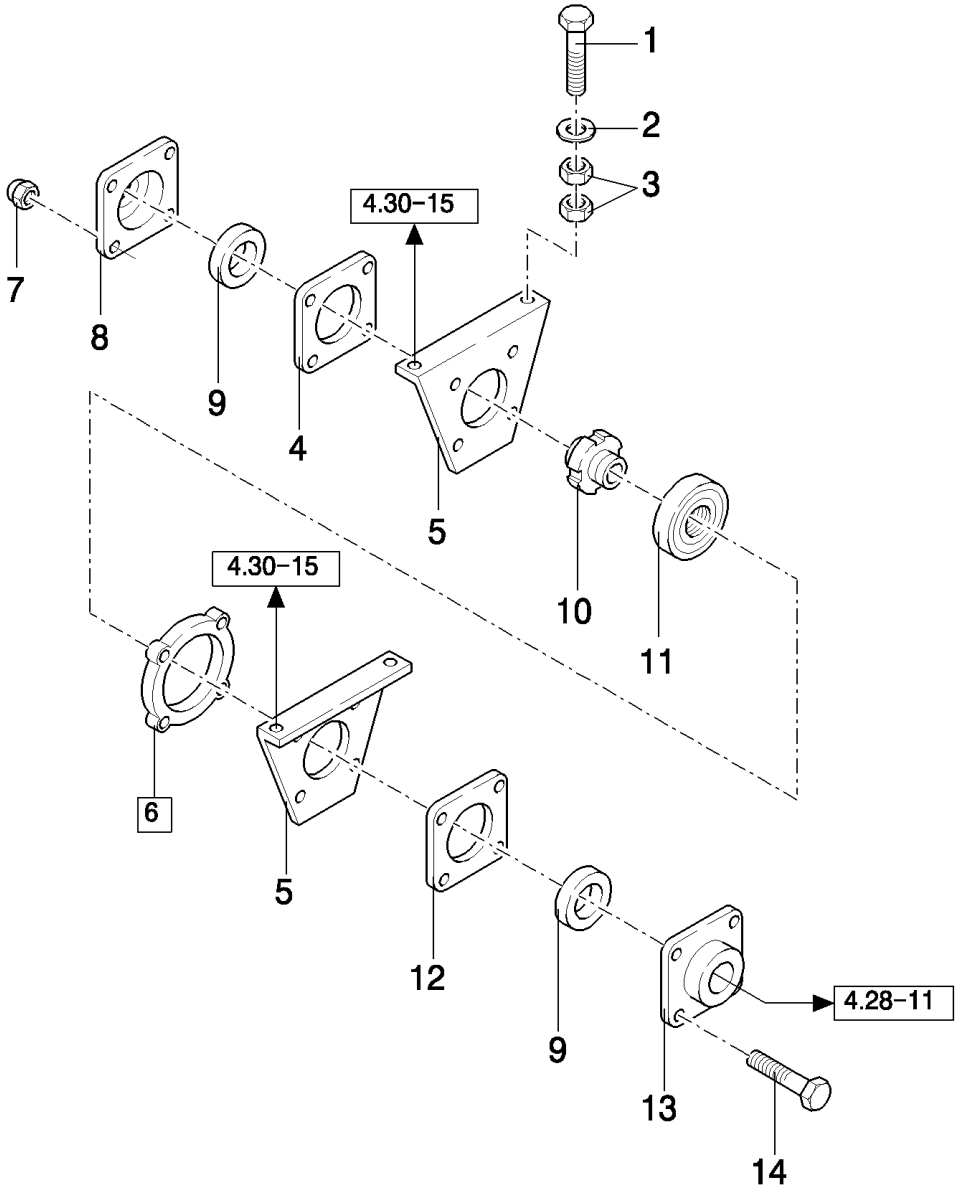

TX68 COMBINE - BASE UNIT

04.29(01) STRAW WALKER BEARINGS

ссылка	Номер детали	Кол-во	Описание
1	338949	AR	BOLT, CARRIAGE, Short NK, M10 x 25, Cl8.8, Full Thd,
2	394629	AR	WASHER, LOCK, 10MM
3	100037	AR	NUT, M10 x 1.5, Cl 8,
4	9850679	AR	FLANGE,
5	421876	AR	PLATE,
6	396079	AR	BEARING ASSY, (11), BSN C415
6	84434854	AR	BEARING ASSY, (11), ASN D416
7	86629542	AR	NUT, LOCK, M8 x 1.25, Cl 8,
8	9850682	AR	FLANGE,
9	9850108	AR	RING,
10	306740	AR	WASHER, LOCK,
11	306739	AR	BEARING, BALL, , BSN C415
11	84433201	AR	BEARING, BALL, , ASN D416
12	9850681	AR	COVER,
13	9850680	AR	FLANGE,
14	43129	AR	BOLT, Hex, M8 x 40, 8.8,

04.30(01) STRAW WALKERS AND COVER PLATES

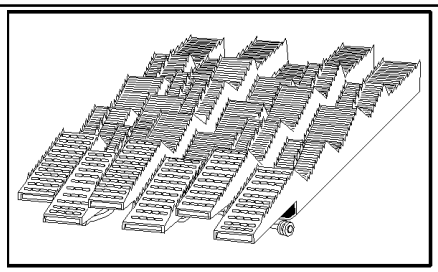

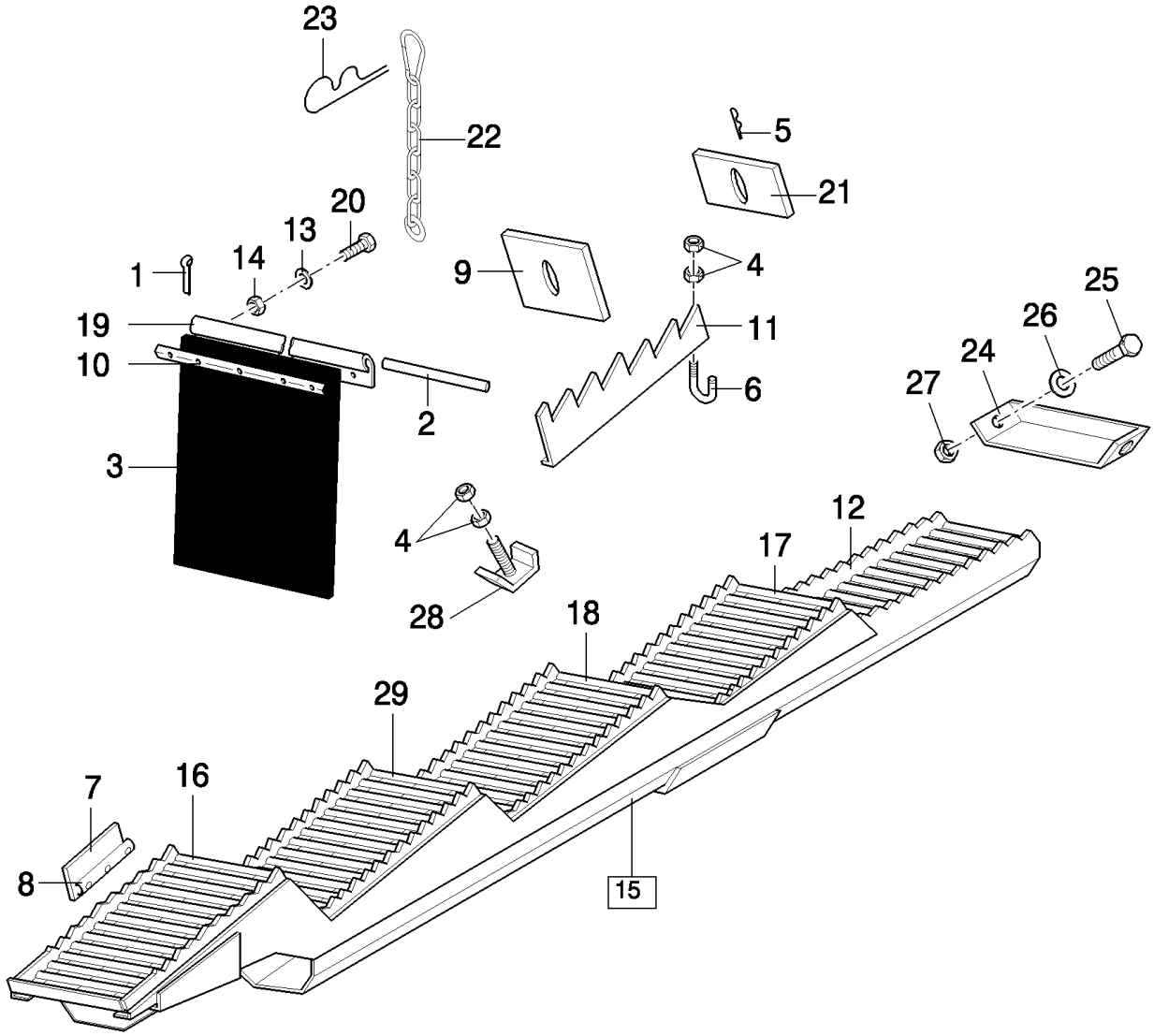

TX68 COMBINE - BASE UNIT

04.30(01) STRAW WALKERS AND COVER PLATES

ссылка	Номер детали	Кол-во	Описание
1	130003	2	PIN, SPLIT (COTTER), M3.2 x 20,
2	387691	1	SHAFT, , FOR TX66-67-68 ONLY
2	391238	1	SHAFT, , FOR TX62-63-64-65 ONLY
3	426949	AR	CANVAS,
4	15896221	40	NUT, M6, Cl 10,
5	86628570	AR	PIN, SPLIT (COTTER), , ACCESSORY
6	359726	AR	HOOK,
7	334502	4	CANVAS,
8	9504186	4	PLATE, FIXING,
9	309623	AR	COVER, , ACCESSORY
10	441843	1	PLATE, FIXING, , FOR TX66-67-68 ONLY
10	441844	1	LATH, , FOR TX62-63-64-65 ONLY
11	374412	AR	CAM,
12	84062226	AR	LINER, METAL,
13	322357	7	WASHER, SPRING, Belleville, M6,
14	353308	7	NUT, M6 x 1, Cl 8,
15	9515584	6	STRAW WALKER, (12,16 to 18,29), FOR TX66-67-68 ONLY
15	9515584	5	STRAW WALKER, (12,16 to 18,29), FOR TX62-63-64-65 ONLY
16	9515591	AR	LINER, METAL,
17	84062227	AR	LINER, METAL, , BSN C359
17	84072766	AR	LINER, METAL, , ASN D360
18	84062225	AR	LINER, METAL,
19	426950	1	HINGE, , FOR TX66-67-68 ONLY
19	80427246	1	HINGE, , FOR TX62-63-64-65 ONLY
20	120100	7	BOLT, Hex, M6 x 20, 8.8,
21	397862	AR	PLATE, STEEL, , ACCESSORY
22	9506868	1	CHAIN,
23	740591	1	PIN, SPLIT (COTTER),
24	84042926	2	PLATE, COVER, , FOR TX62-63-64-65 ONLY
24	84042926	3	PLATE, COVER, , FOR TX66-67-68 ONLY
26	322358	AR	WASHER, SPRING, Belleville, M8,
27	9706690	AR	NUT, M8, Cl 8,
28	353893	8	CLAMP, , D1081-
29	9515594	AR	LINER, METAL, , -C1080
29	84062228	AR	LINER, METAL, , D1081-
25	16043224	AR	BOLT, Hex, M8 x 16, 8.8, Full Thd,

04.31(01) AUGER HOUSING - SELF-LEVELLING

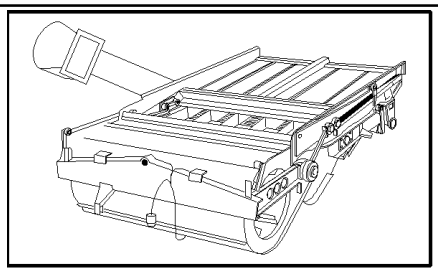

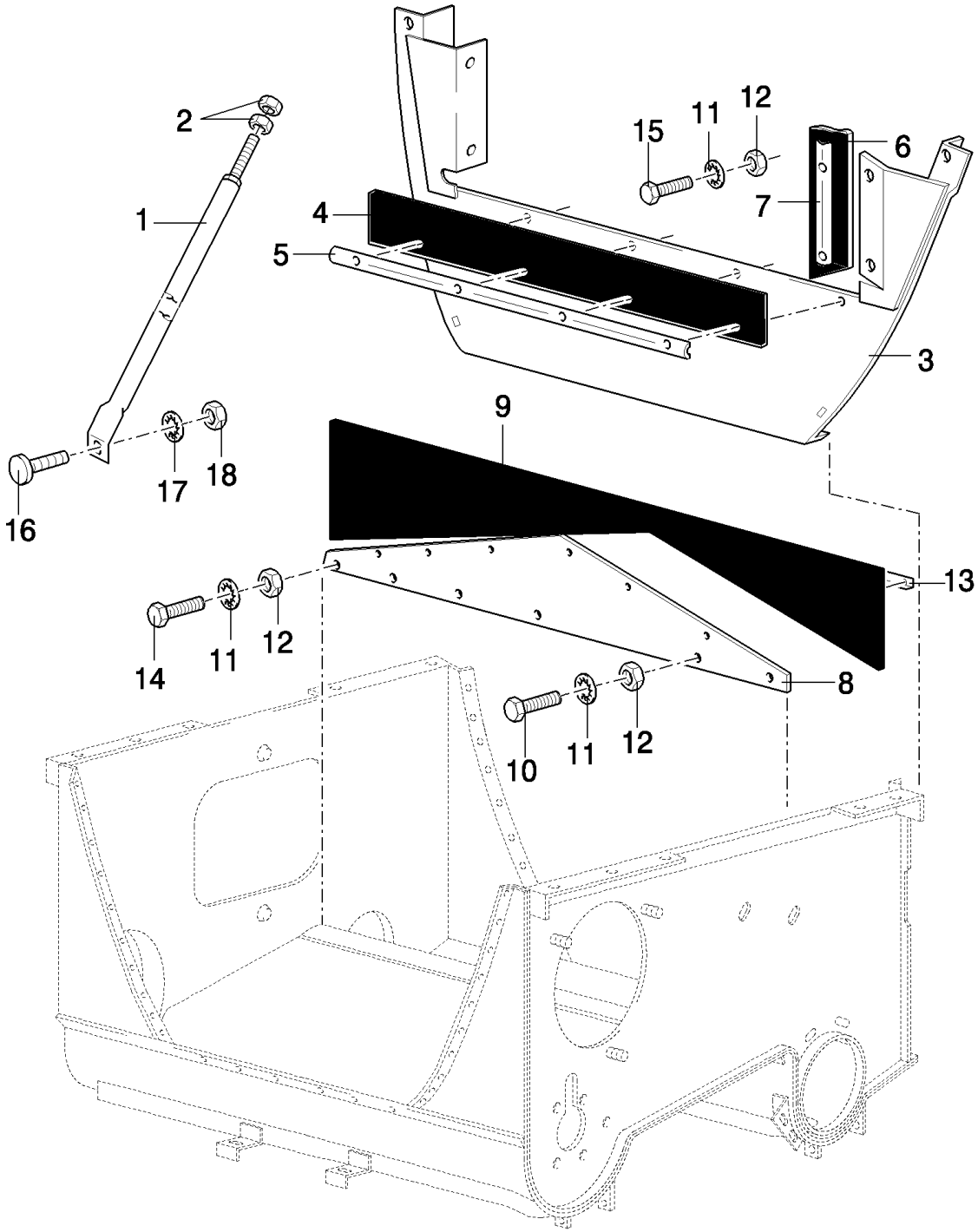

TX68 COMBINE - BASE UNIT

04.31(01) AUGER HOUSING - SELF-LEVELLING

ссылка	Номер детали	Кол-во	Описание
1	444438	1	SUPPORT, LH
1	444439	1	SUPPORT, RH
2	337475	4	NUT, M12, Cl 10,
3	9501549	1	PLATE, REAR, FOR TX66-68 ONLY
3	9501545	1	PLATE, REAR, FOR TX62-63-64-65 ONLY
4	9501640	1	CANVAS, , FOR TX66-67-68 ONLY
4	922273	1	CANVAS, , FOR TX62-63-64-65 ONLY
5	451797	1	PLATE, FIXING, , FOR TX66-67-68 ONLY
5	428057	1	PLATE, FIXING, , FOR TX62-63-64-65 ONLY
6	922272	2	ELEMENT, SEALING,
7	428404	2	PLATE, FIXING,
8	451799	1	PLATE, , FOR TX66-67-68 ONLY
8	80430706	1	PLATE, , FOR TX62-63-64-65 ONLY
9	451801	2	SEAL, , FOR TX66-67-68 ONLY
9	916005	2	CANVAS, , FOR TX62-63-64-65 ONLY
10	80120099	AR	BOLT, Hex, M6 x 16, 8.8,
11	322357	AR	WASHER, SPRING, Belleville, M6,
12	15896221	AR	NUT, M6, Cl 10,
13	399945	2	PLATE, FIXING, , FOR TX66-67-68 ONLY
13	435591	2	PLATE, FIXING, , FOR TX62-63-64-65 ONLY
14	120100	2	BOLT, Hex, M6 x 20, 8.8,
15	86977786	2	BOLT, Hex, M6 x 25, 8.8,
16	86507486	2	BOLT, CARRIAGE, Short NK, M8 x 20, Cl8.8, Full Thd,
17	322358	2	WASHER, SPRING, Belleville, M8,
18	9706690	2	NUT, M8, Cl 8,

04.32(01) AUGER HOUSING - SELF-LEVELLING

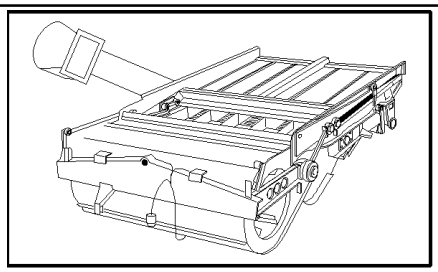

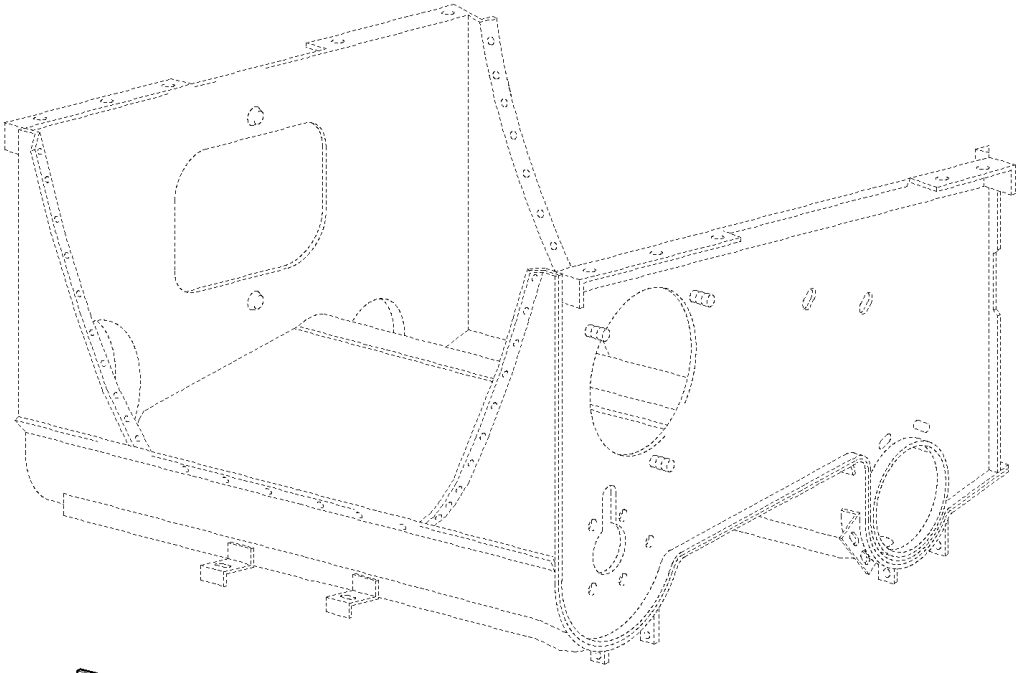

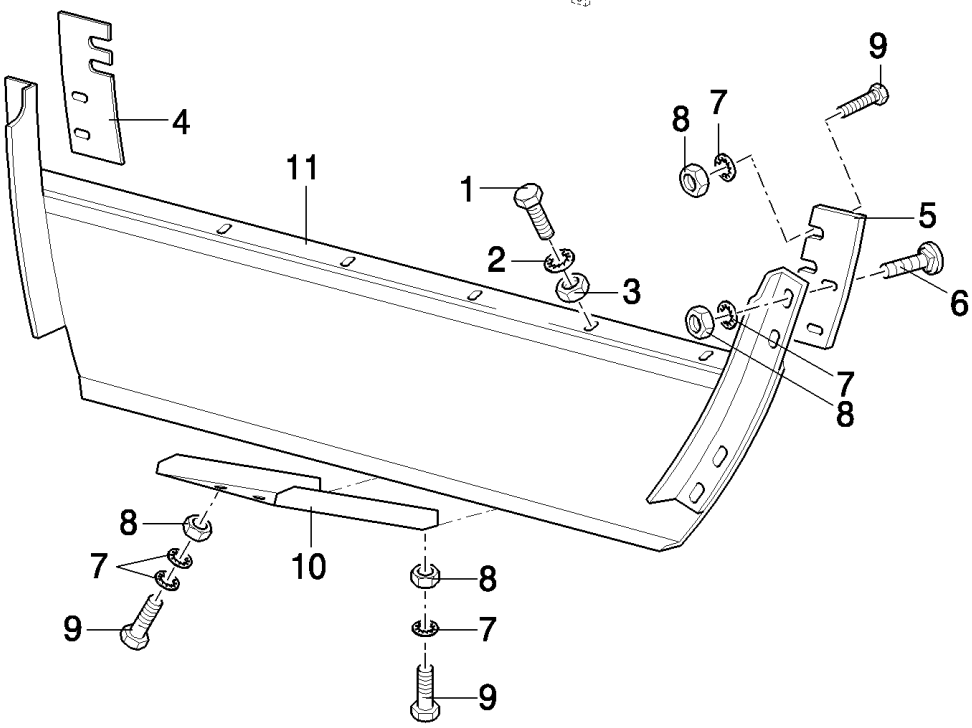

TX68 COMBINE - BASE UNIT

04.32(01) AUGER HOUSING - SELF-LEVELLING

ссылка	Номер детали	Кол-во	Описание
1	80120099	AR	BOLT, Hex, M6 x 16, 8.8,
2	322357	AR	WASHER, SPRING, Belleville, M6,
3	15896221	AR	NUT, M6, Cl 10,
4	9505917	1	PLATE, RH
5	747573	1	PLATE, LH
6	86507486	4	BOLT, CARRIAGE, Short NK, M8 x 20, Cl8.8, Full Thd,
7	322358	AR	WASHER, SPRING, Belleville, M8,
8	9706690	AR	NUT, M8, Cl 8,
9	120104	AR	SCREW, Hex, M8 x 20, 8.8,
10	753442	2	SUPPORT,
11	9501548	1	PLATE, , FOR TX66-67-68 ONLY
11	9501544	1	PLATE, , FOR TX62-63-64-65 ONLY

04.33(01) AUGER HOUSING - SELF-LEVELLING

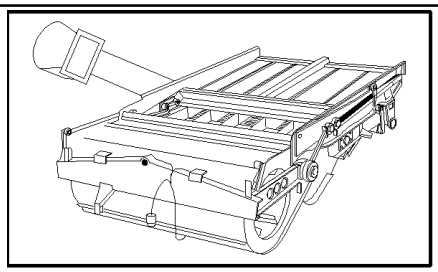

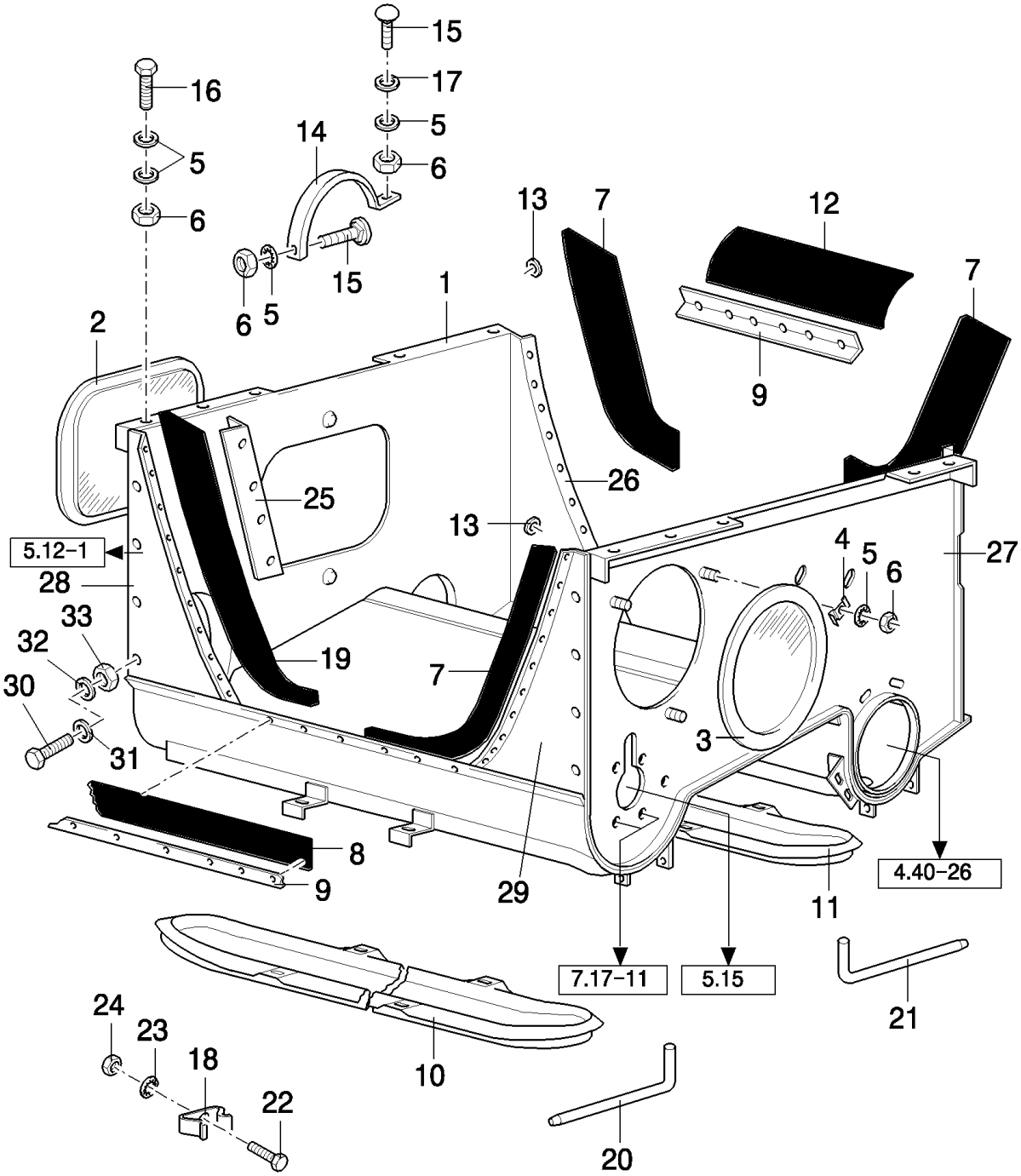

PERFORATED COVERS ON GRAIN ELEVATOR SEE SECTION 5

TX68 COMBINE - BASE UNIT

04.33(01) AUGER HOUSING - SELF-LEVELLING

ссылка	Номер детали	Кол-во	Описание
1	9831377	1	HOUSING, , FOR TX66-68 ONLY, -C5550
1	84017113	1	HOUSING, , FOR TX66-67-68 ONLY, D5550-
1	9831378	1	HOUSING, , FOR TX62-63-64-65 ONLY
2	380457	1	COVER,
3	435627	1	COVER,
4	425093	6	CLIP,
5	322358	AR	WASHER, SPRING, Belleville, M8,
6	9706690	36	NUT, M8, Cl 8,
7	435601	3	SEAL,
8	451794	1	ELEMENT, SEALING, , FOR TX66-67-68 ONLY
8	80428401	1	ELEMENT, SEALING, , FOR TX62-63-64-65 ONLY
9	451793	2	PLATE, FIXING, , FOR TX66-67-68 ONLY
9	428402	2	PLATE, FIXING, , FOR TX62-63-64-65 ONLY
10	429313	1	COVER, , STANDARD COVERS
10	740666	1	COVER, , PERFORATED COVERS
10	84023432	1	COVER, , REINFORCED
11	429314	1	COVER, , STANDARD COVERS
11	740667	1	COVER, , PERFORATED COVERS
12	451792	1	ELEMENT, SEALING, , FOR TX66-67-68 ONLY
12	442793	1	ELEMENT, SEALING, , FOR TX62-63-64-65 ONLY
13	140182	AR	WASHER, M5 x 18 x 2,
14	9513460	1	SUPPORT,
15	86507486	3	BOLT, CARRIAGE, Short NK, M8 x 20, Cl8.8, Full Thd,
16	120104	10	SCREW, Hex, M8 x 20, 8.8,
17	140041	2	WASHER, M8 x 28 x 3,
18	323307	4	CLAMP,
19	9503113	1	ELEMENT, SEALING,
20	9819719	2	PIN,
21	9819720	2	PIN,
22	412064	4	SCREW, Hex, M4 x 16, 8.8, Full Thd,
23	322355	4	WASHER, Belleville, M4,
24	100012	4	NUT, M4, Cl 8,
25	428404	1	PLATE, FIXING,
26	9515004	1	PLATE, REAR,RH
27	9515005	1	PLATE, REAR,LH
28	9514939	1	PLATE, FRONT,RH
29	9514940	1	PLATE, FRONT,LH
30	80120099	14	BOLT, Hex, M6 x 16, 8.8,
31	140040	14	WASHER, M6 x 22 x 2,
32	322357	14	WASHER, SPRING, Belleville, M6,
33	15896221	14	NUT, M6, Cl 10,

PERFORATED COVERS ON GRAIN ELEVATOR SEE SECTION 5

04.34(01) AUGER HOUSING, FIXED SHOE

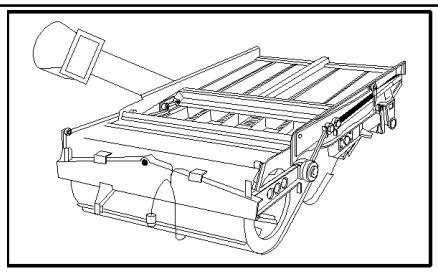

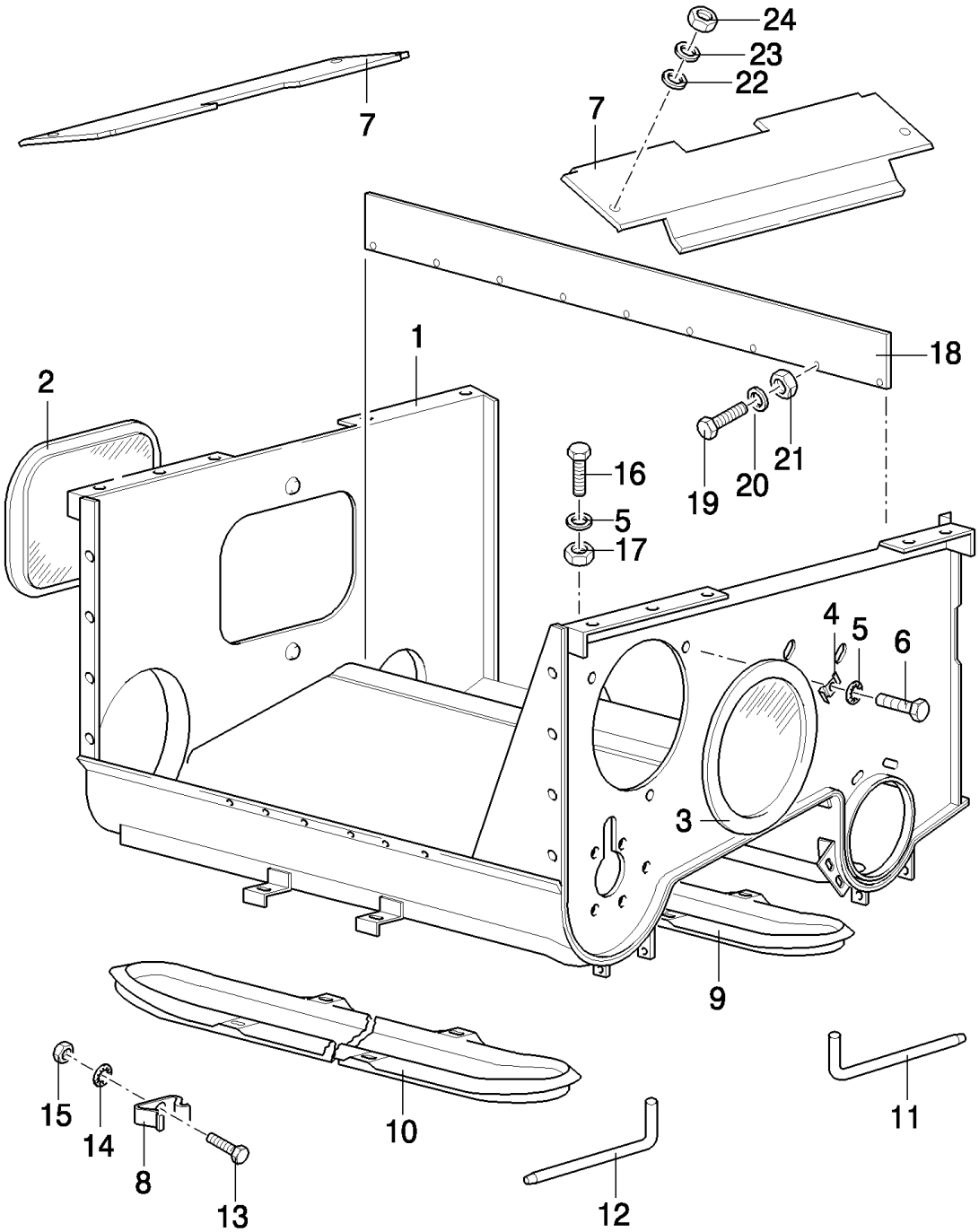

TX68 COMBINE - BASE UNIT

04.34(01) AUGER HOUSING, FIXED SHOE

ссылка	Номер детали	Кол-во	Описание
1	9831378	1	HOUSING, , FOR TX62-63-64-65 ONLY
1	84017113	1	HOUSING, , FOR TX66-67-68 ONLY, D5550-
2	380457	1	COVER,
3	435627	1	COVER,
4	425093	6	CLIP,
5	322358	8	WASHER, SPRING, Belleville, M8,
6	43128	6	BOLT, Hex, M8 x 30, 8.8,
7	84011482	2	PLATE,
8	323307	4	CLAMP,
9	429314	1	COVER,
10	429313	1	COVER,
11	9819720	2	PIN,
12	9819719	2	PIN,
13	412064	4	SCREW, Hex, M4 x 16, 8.8, Full Thd,
14	322355	4	WASHER, Belleville, M4,
15	100012	4	NUT, M4, Cl 8,
17	9706690	2	NUT, M8, Cl 8,
18	80922831	1	PLATE, , FOR TX62-63-64-65 ONLY
18	84017101	1	PLATE, , FOR TX66-67-68 ONLY, D5550-
19	378056	9	BOLT, Hex, M6 x 10, 8.8, Full Thd,
20	322357	9	WASHER, SPRING, Belleville, M6,
21	15896221	9	NUT, M6, Cl 10,
22	358817	4	WASHER,
23	140040	4	WASHER, M6 x 22 x 2,
24	353308	4	NUT, M6 x 1, Cl 8,
16	16043224	2	BOLT, Hex, M8 x 16, 8.8, Full Thd,

04.35(01) AUGER HOUSING, FIXED SHOE

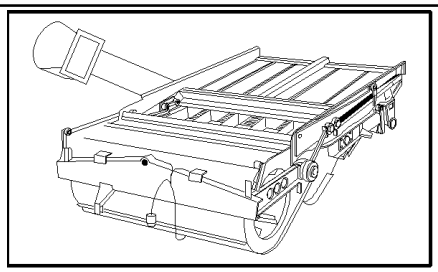

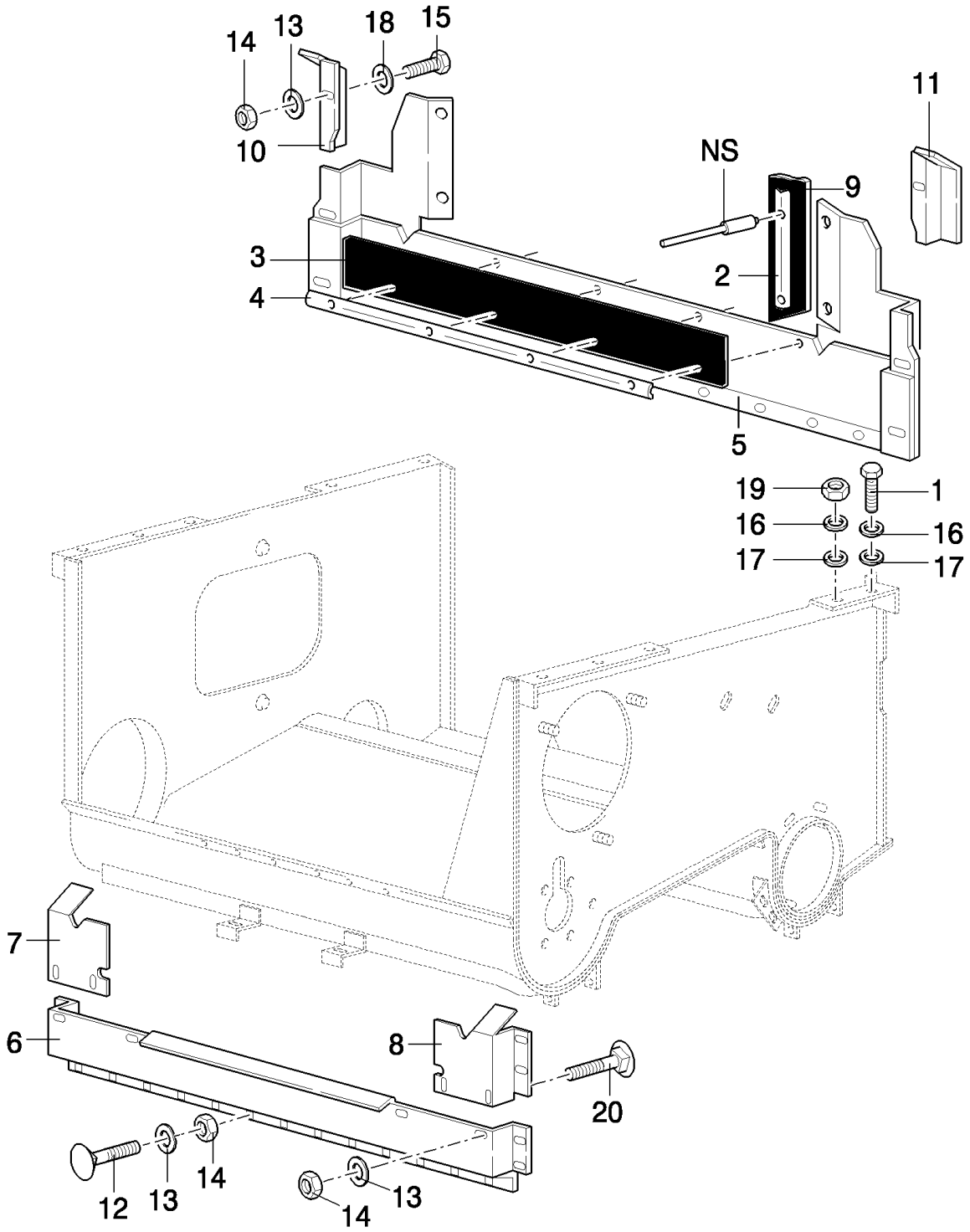

TX68 COMBINE - BASE UNIT

04.35(01) AUGER HOUSING, FIXED SHOE

ссылка	Номер детали	Кол-во	Описание
1	43128	8	BOLT, Hex, M8 x 30, 8.8,
2	80922542	2	PLATE, FIXING,
3	922273	1	CANVAS, , FOR TX62-63-64-65 ONLY
3	84017102	1	CANVAS, , FOR TX66-67-68 ONLY, D5550-
4	428057	1	PLATE, FIXING, , FOR TX62-63-64-65 ONLY
4	451797	1	PLATE, FIXING, , FOR TX66-67-68 ONLY, D5550-
5	84017188	1	SHIELD, , FOR TX62-63-64-65 ONLY
5	84017110	1	SHIELD, , FOR TX66-67-68 ONLY, D5550-
6	922549	1	PLATE, , FOR TX62-63-64-65 ONLY
6	84017112	1	PLATE, , FOR TX66-67-68 ONLY, D5550-
7	84017107	1	PLATE, COVER,
8	84017106	1	PLATE, COVER,
9	922541	2	CANVAS,
10	84017108	1	PLATE, COVER,
11	84019384	1	PLATE,
12	86512439	25	SCREW, Short NK, M6 x 16, Cl8.8, Full Thd,
13	322357	40	WASHER, SPRING, Belleville, M6,
14	15896221	40	NUT, M6, Cl 10,
15	80120099	14	BOLT, Hex, M6 x 16, 8.8,
16	140041	16	WASHER, M8 x 28 x 3,
17	358817	16	WASHER,
18	140040	14	WASHER, M6 x 22 x 2,
19	86629542	8	NUT, LOCK, M8 x 1.25, Cl 8,
20	374891	1	BOLT, CARRIAGE, Short NK, M6 x 25, Cl8.8, Full Thd,

04.36(01) TAILINGS ELEVATORS

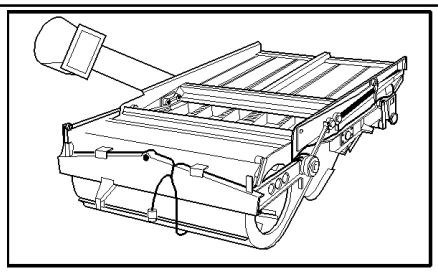

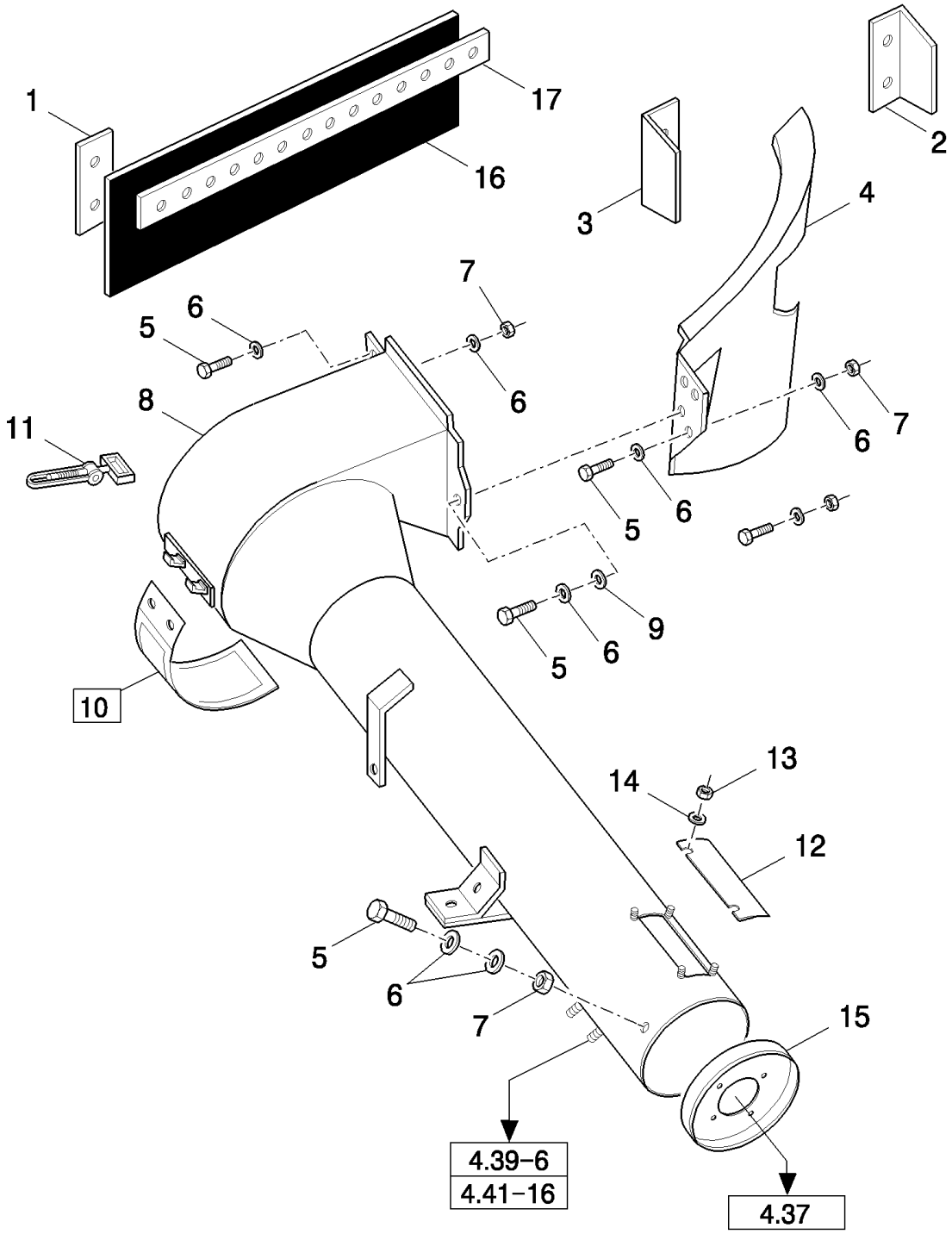

TX68 COMBINE - BASE UNIT

04.36(01) TAILINGS ELEVATORS

ссылка	Номер детали	Кол-во	Описание
1	454496	AR	PLATE, COVER, L:140MM
1	84017823	AR	PLATE, COVER, L:100MM, FOR TX62-63-64-65 ONLY
2	84007169	AR	DEFLECTOR, RH,L:140MM
2	84017822	AR	DEFLECTOR, RH,L:100MM, FOR TX62-63-64-65 ONLY
3	84012942	AR	DEFLECTOR, LH, FOR TX66-67-68 ONLY
4	84001835	1	GUIDE, RH, FOR TX66-67-68 ONLY
4	84001833	1	GUIDE, LH, FOR TX66-67-68 ONLY
4	84011906	1	GUIDE, LH, FOR TX62-63-64-65 ONLY
5	120104	AR	SCREW, Hex, M8 x 20, 8.8,
6	322358	AR	WASHER, SPRING, Belleville, M8,
7	9706690	AR	NUT, M8, Cl 8,
8	84015483	1	HOUSING, GRAIN ELEVATOR, RH, FOR TX66-67-68 ONLY
8	84015482	1	HOUSING, GRAIN ELEVATOR, LH
9	140041	2	WASHER, M8 x 28 x 3,
10	84000112	1	COVER, (11), -C7510
10	84043040	1	COVER, (11), D7510-
11	9513188	1	FASTENER, , -C7510
11	84043033	1	CLAMP, , D7510-
12	428440	AR	COVER,
13	15896221	8	NUT, M6, Cl 10,
14	322357	8	WASHER, SPRING, Belleville, M6,
15	433469	AR	FLANGE,
16	84018627	1	CANVAS, , FOR TX66-67-68 ONLY, -C1301
16	84817933	1	CANVAS, , FOR TX66-67-68 ONLY, D1302-
16	84017981	1	CANVAS, , FOR TX62-63-64-65 ONLY, FOR SELF-LEVELLING ONLY, -C1301
16	84817931	1	CANVAS, , FOR SELF-LEVELLING ONLY, FOR TX62-63-64-65 ONLY, D1302-
16	84018013	1	CANVAS, , FOR TX62-63-64-65 ONLY, FOR FIXED SHOE ONLY, -C1301
16	84817932	1	CANVAS, , FOR FIXED SHOE ONLY, FOR TX62-63-64-65 ONLY, D1302-
17	457881	1	PLATE, FIXING, , FOR TX66-67-68 ONLY
17	457879	1	PLATE, FIXING, , FOR TX62-63-64-65 ONLY

04.37(01) TAILINGS ELEVATORS

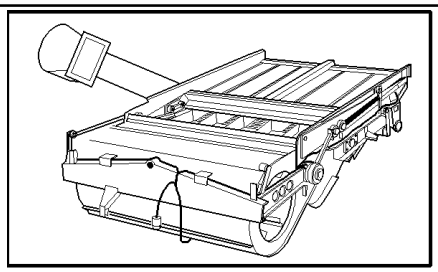

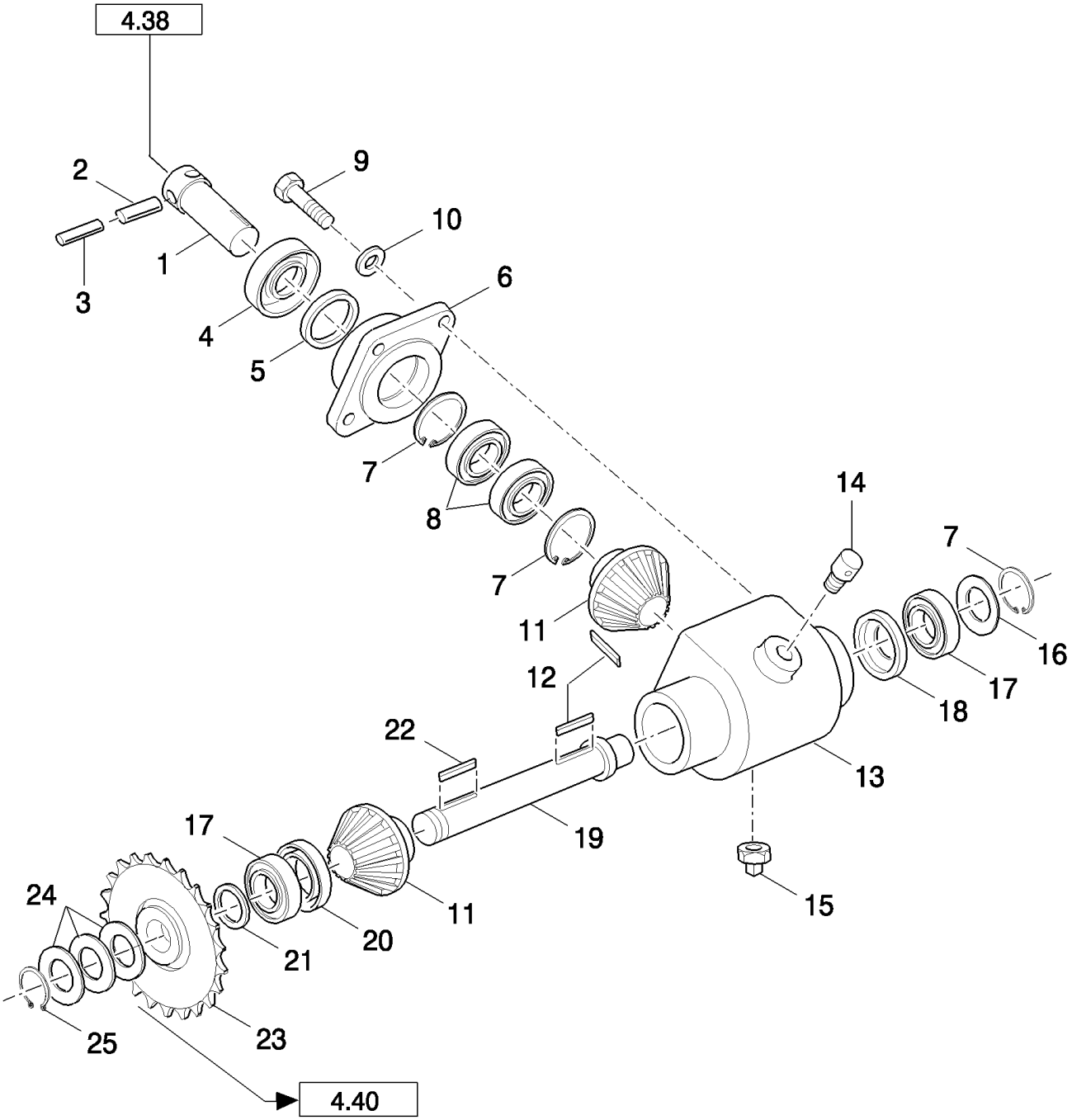

TX68 COMBINE - BASE UNIT

04.37(01) TAILINGS ELEVATORS

ссылка	Номер детали	Кол-во	Описание
	84004254	1	GEARBOX, (1 to 20), BSN C375
	84819504	1	GEARBOX, (1, 4 to 20), ASN D376
1	428702	1	SHAFT,
2	381928	1	PIN, LOCK, M10 x 50, Slotted,
3	333960	1	PIN, LOCK, M6 x 50, Slotted,
4	427252	1	PROTECTION CAP,
5	378273	1	SEAL,
6	428704	1	HOUSING, BEARING,
7	370011	3	RING, SNAP, M52, Int,
8	84057966	2	BEARING, BALL, , BSN C375
8	84057966	2	BEARING, BALL, , ASN D376
9	43140	4	BOLT, Hex, M10 x 30, 8.8, Full Thd,
10	140045	4	WASHER, SPRING, Belleville, M10,
11	9508218	2	GEAR,
12	170005	4	KEY, 8x7x25, -C7590
12	170030	4	KEY, M8 x 7 x 32, Par, , D7590-
13	428711	1	HOUSING,
14	80710	1	NIPPLE, LUBE, 1/8"-27 x .66 lg,
15	80709	1	PLUG, Sq Hd, 1/8"-27,
16	376817	AR	WASHER, 42MM
17	443898	2	BEARING, BALL,
18	447563	1	ELEMENT, SEALING,
19	84004253	1	SHAFT,
20	391120	1	ELEMENT, SEALING,
21	419854	AR	WASHER, 26MM
22	170008	1	KEY,
23	84004252	1	SPROCKET, DRIVEN, 28T
24	444976	AR	WASHER, 26MM
25	370002	1	RING, SNAP, M25, Ext,

04.38(01) TAILINGS ELEVATORS

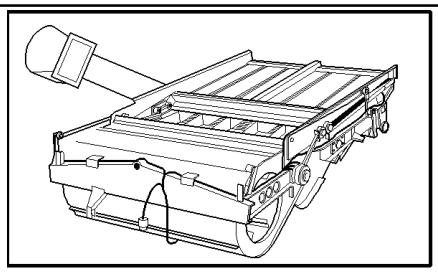

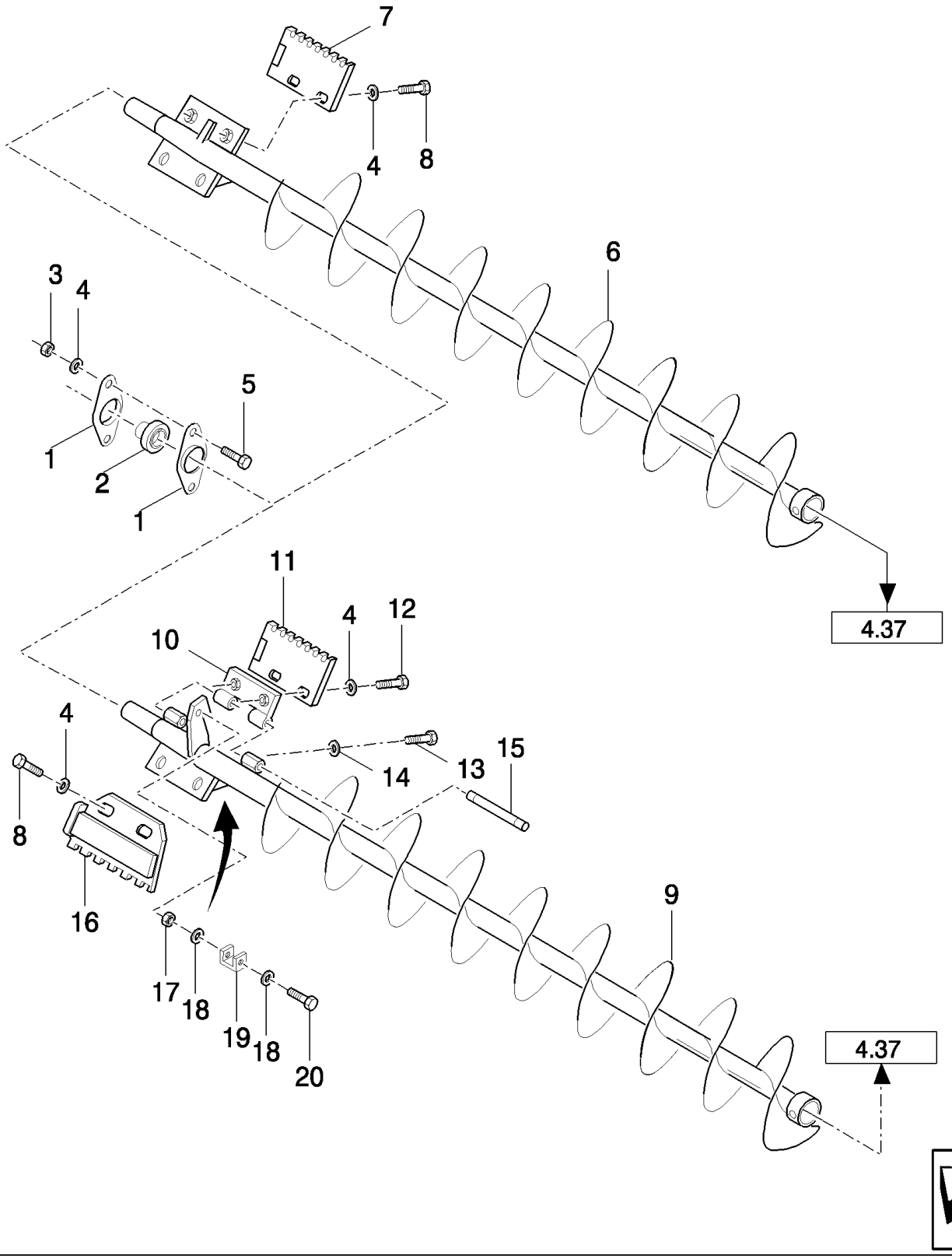

TX68 COMBINE - BASE UNIT

04.38(01) TAILINGS ELEVATORS

ссылка	Номер детали	Кол-во	Описание
1	56128	AR	FLANGE,
2	325103	AR	BEARING, BALL,
3	9706690	AR	NUT, M8, Cl 8,
4	322358	AR	WASHER, SPRING, Belleville, M8,
5	86507486	AR	BOLT, CARRIAGE, Short NK, M8 x 20, Cl8.8, Full Thd,
6	9850823	1	AUGER, RH, FOR TX66-67-68 ONLY, STANDARD
6	84000643	1	AUGER, RH, FOR TX66-67-68 ONLY, REINFORCED
7	9837532	2	DEFLECTOR, RH, FOR TX66-67-68 ONLY, STANDARD
7	84000642	2	DEFLECTOR, RH, FOR TX66-67-68 ONLY, REINFORCED
8	43127	6	BOLT, Hex, M8 x 25, 8.8,
9	9831155	1	AUGER, LH, STANDARD
9	9850046	1	AUGER, LH, REINFORCED
10	9831148	1	HINGE,
11	9838317	1	DEFLECTOR, LH, STANDARD
11	9850047	1	DEFLECTOR, LH, REINFORCED
12	120104	AR	SCREW, Hex, M8 x 20, 8.8,
13	120242	1	SET SCREW, Hex Soc, M6 x 10, Cup Pt,
13	80300473	1	SCREW, M6x16
13	300477	1	SET SCREW, Hex Soc, M8 x 16, Cup Pt, M8x16
14	15896221	1	NUT, M6, Cl 10,
15	9831156	1	SHAFT, , -C7510
15	84043035	1	PIN, , D7510-
16	9838316	1	DEFLECTOR, LH, STANDARD
16	9850048	1	DEFLECTOR, LH, REINFORCED
17	86629542	2	NUT, LOCK, M8 x 1.25, Cl 8,
18	378243	4	WASHER, M8,
19	84014122	2	CANVAS,
20	300381	2	BOLT, Hex, M8 x 35, 8.8,

04.39(01) TAILINGS BOTTOM AUGER

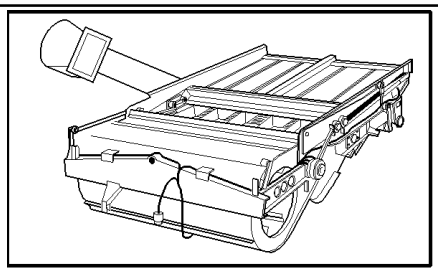

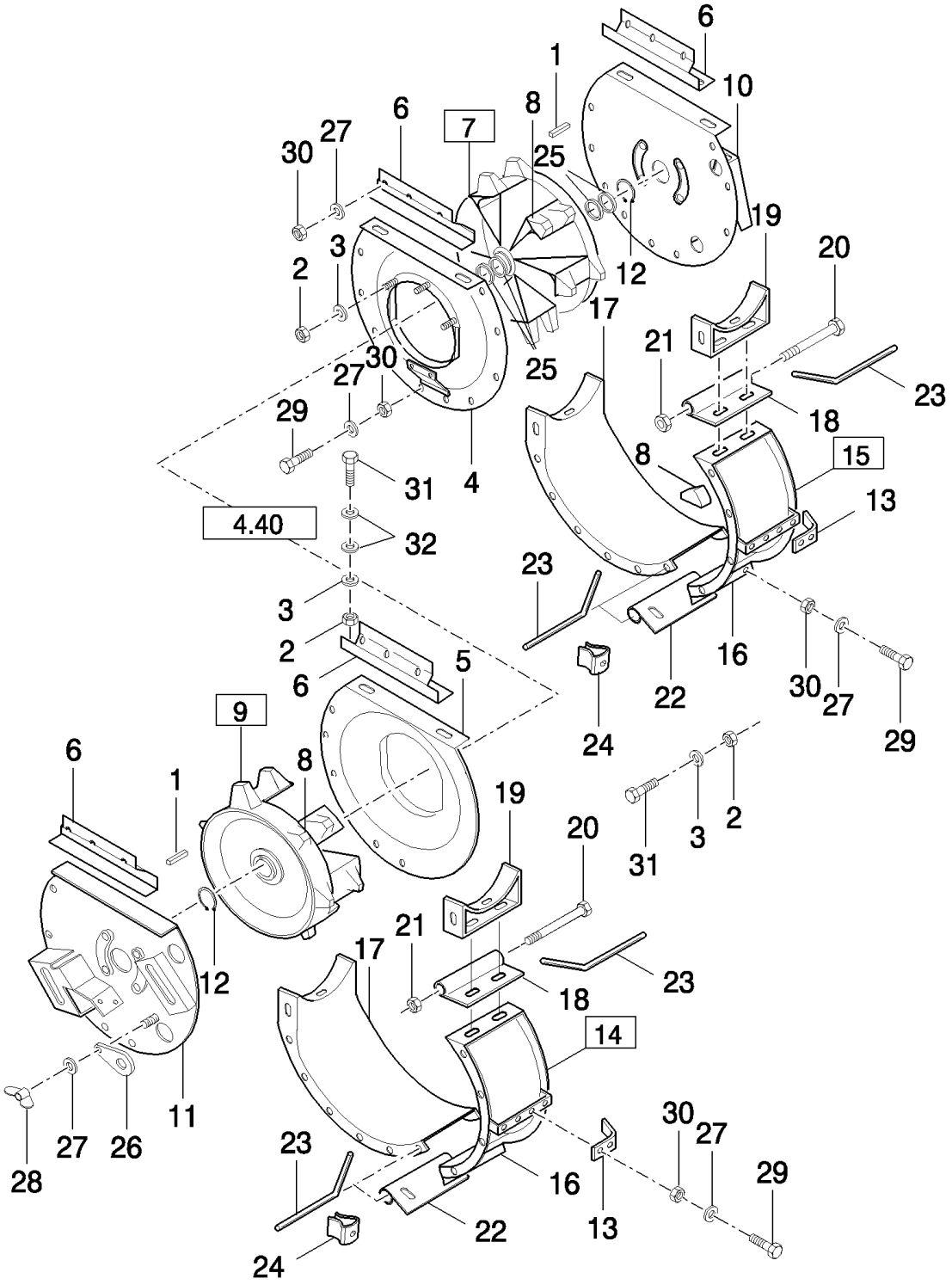

TX68 COMBINE - BASE UNIT

04.39(01) TAILINGS BOTTOM AUGER

ссылка	Номер детали	Кол-во	Описание
1	323190	AR	KEY,
2	9706690	AR	NUT, M8, Cl 8,
3	322358	AR	WASHER, SPRING, Belleville, M8,
4	921302	1	PANEL, SIDE, RH, WITH TEETH
5	921303	1	PANEL, SIDE, LH
6	445802	AR	SUPPORT,
7	9509686	1	AWNER, RH [8(12x)], WITH TEETH, STANDARD VERSION, -C1205
7	84607287	1	AWNER, RH [8(12x)], STANDARD VERSION, WITH TEETH, D1206-
7	9512669	1	AWNER, RH [8(12x)], WITH TEETH, REINFORCED VERSION, -C1205
7	84607289	1	AWNER, RH [8(12x)], REINFORCED VERSION, WITH TEETH, D1206-
8	421866	AR	PIN,
9	9509685	1	AWNER, LH [8(12x)], STANDARD VERSION, -C1205
9	84607291	1	AWNER, LH [8(12x)], STANDARD VERSION, D1206-
9	9512668	1	AWNER, LH [8(12x)], REINFORCED VERSION, -C1205
9	84607293	1	AWNER, LH [8(12x)], REINFORCED VERSION, D1206-
10	84015581	1	PLATE, RH, WITH TEETH
11	9838625	1	PLATE, LH
12	11068376	AR	RING, SNAP, M35, Ext x 1.5 Thk,
13	455652	AR	BRACKET,
14	921724	1	COVER, LH [8(11x)]
15	921726	1	COVER, RH [8(11x)], WITH TEETH
16	455167	AR	DIA KIT, HARVESTER, , SMOOTH VERSION
17	434524	AR	COVER, , SMOOTH VERSION
17	84014724	AR	COVER, , REINFORCED VERSION
18	428700	2	PLATE, ADJUSTING,
19	434516	2	SUPPORT,
20	381522	2	BOLT, Hex, M8 x 130, 8.8, , -C1034
21	412250	2	NUT, LOCK, M8 x 1.25, Cl 8, , -C1034
22	747606	2	PLATE, ADJUSTING,
23	9819720	2	PIN, , -C1034
23	84038089	4	PIN, , D1035-
24	323307	4	CLAMP,
25	444099	AR	PLATE, ADJUSTING, THK.:3MM
25	58630	AR	SHIM, .0299" Thk, THK.:0.8MM
26	456468	4	PLATE, , STANDARD VERSION
26	84023284	4	COVER, , REINFORCED VERSION
27	322357	AR	WASHER, SPRING, Belleville, M6,
28	84814892	4	NUT, WING, M6 x 1,
29	80120099	AR	BOLT, Hex, M6 x 16, 8.8,
30	15896221	AR	NUT, M6, Cl 10,
31	120104	4	SCREW, Hex, M8 x 20, 8.8,
32	378243	AR	WASHER, M8,

04.40(01) TAILINGS BOTTOM AUGER

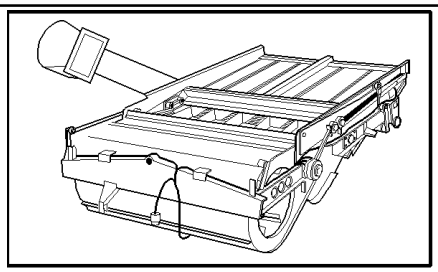

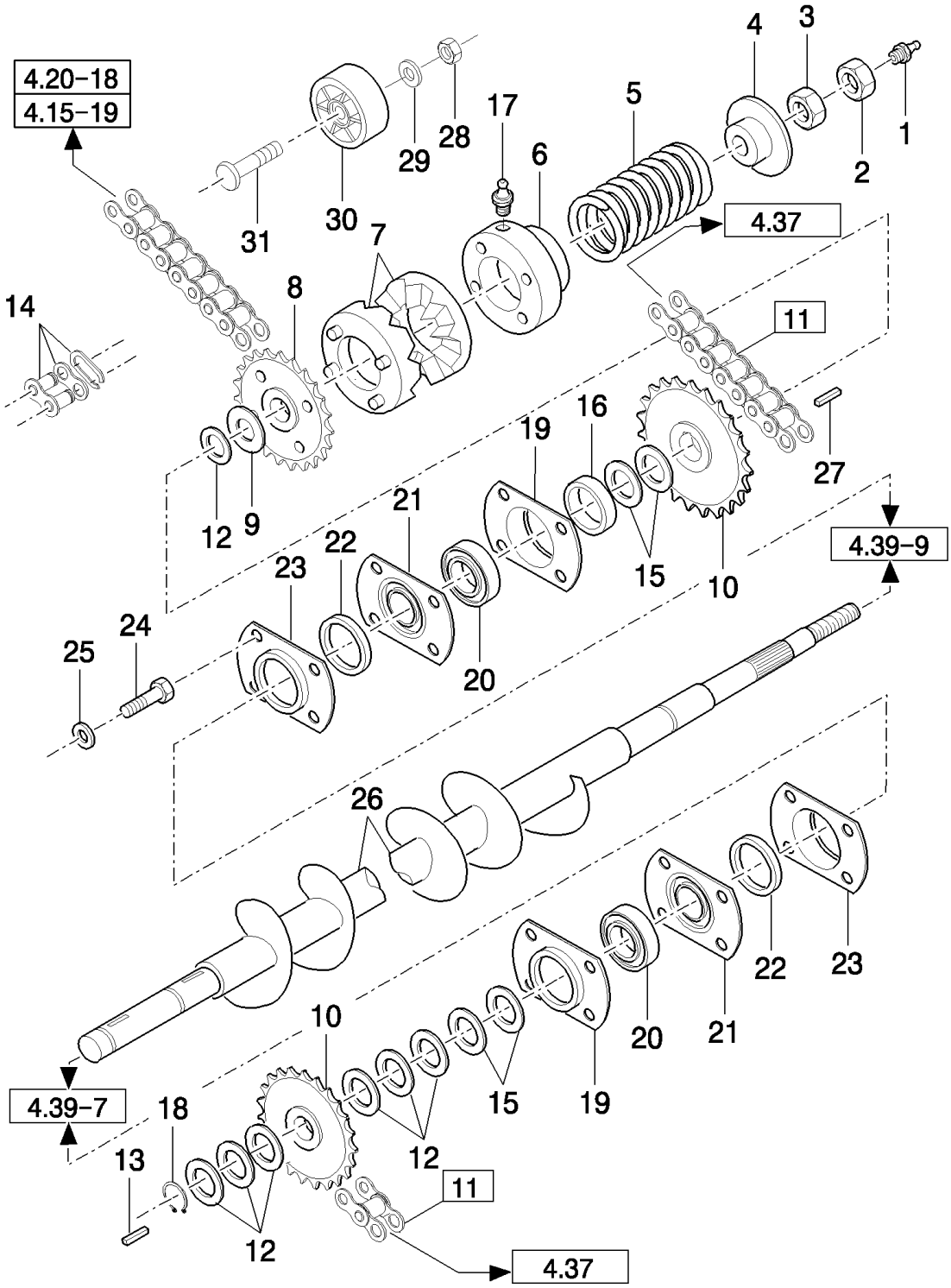

TX68 COMBINE - BASE UNIT

04.40(01) TAILINGS BOTTOM AUGER

ссылка	Номер детали	Кол-во	Описание
1	321204	1	NIPPLE, LUBE, M6 x 1, 16mm lg,
2	62275	1	NUT, Thin, M20x 2.5, Cl 04, M20
3	9706694	1	NUT, M20, Cl 8,
4	443462	1	BUSHING,
5	456674	1	SPRING,
6	452892	1	HUB,
7	394363	2	CLUTCH,
8	451349	1	SPROCKET, DRIVEN,
9	140184	1	WASHER, THK.:2.99MM
10	451358	2	SPROCKET, DRIVEN,
11	84000317	2	CHAIN, (14)
12	444974	AR	WASHER, THK.:2MM
13	170008	1	KEY,
14	165590	2	LINK, CONNECTING,
15	140119	AR	WASHER,
16	436895	1	SPACER,
17	323787	1	NIPPLE, LUBE,
18	370003	1	RING, SNAP, M30, Ext,
19	9511041	2	FLANGE,
20	364908	2	BEARING ASSY,
21	444104	2	COVER,
22	220010	2	ELEMENT, SEALING,
23	444105	2	COVER,
25	322358	8	WASHER, SPRING, Belleville, M8,
26	453130	1	AUGER, , STANDARD VERSION
26	9831426	1	AUGER, , REINFORCED VERSION
27	170005	1	KEY,
28	412126	2	NUT, LOCK, M12 x 1.75, Cl 8,
29	378245	2	WASHER, M12,
30	451361	2	WHEEL, IDLER,
31	334682	2	BOLT, CARRIAGE, Short NK, M12 x 50, Cl8.8, Full Thd,
24	16043224	8	BOLT, Hex, M8 x 16, 8.8, Full Thd,

04.43(01) GRASS SEED EQUIPMENT - ACCESSORIES

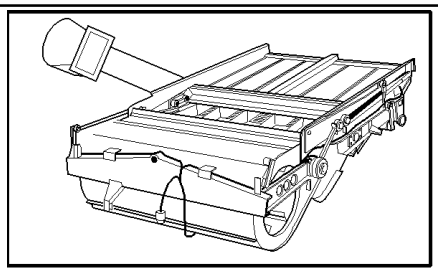

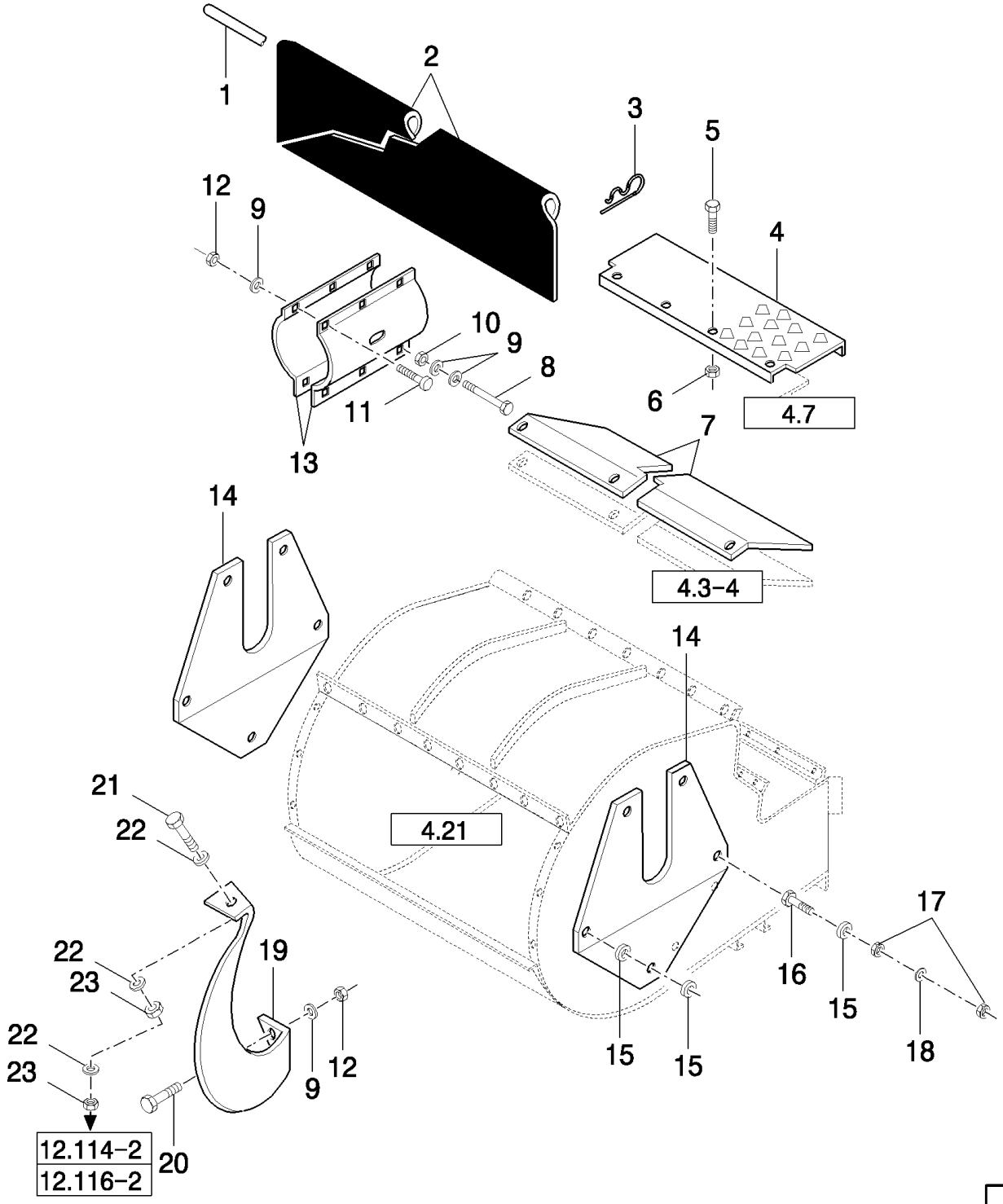

TX68 COMBINE - BASE UNIT

04.43(01) GRASS SEED EQUIPMENT - ACCESSORIES

ссылка	Номер детали	Кол-во	Описание
1	387691	1	SHAFT, , FOR TX66-68 ONLY, -C5500
1	391238	1	SHAFT, , FOR TX62-64-65 ONLY, -C5500
2	84000984	1	CANVAS, , FOR TX66-68 ONLY, -C5500
2	84014681	1	CANVAS, , FOR TX62-64-65 ONLY, -C5500
3	370539	2	PIN, SPLIT (COTTER), , -C5500
4	453266	2	SIEVE EXTENSION, , FOR TX66-67-68 ONLY, -C5500
4	430384	1	SIEVE EXTENSION, , FOR TX62-64-65 ONLY, -C5500
5	80120099	8	BOLT, Hex, M6 x 16, 8.8,
6	353308	8	NUT, M6 x 1, Cl 8,
7	751312	2	PLATE, , FOR TX66-68 ONLY, -C5500
7	80436084	1	PLATE, , FOR TX62-64-65 ONLY, -C5500
8	44028	1	BOLT, Hex, M8 x 110, 8.8, M8x110, FOR 3.85M UNLOADING AUGER ONLY
8	300807	1	SCREW, Hex, M8 x 140, 8.8, M8x140, FOR 4.65M AND 5.20M UNLOADING AUGER ONLY
9	322358	9	WASHER, SPRING, Belleville, M8,
10	86629542	1	NUT, LOCK, M8 x 1.25, Cl 8,
11	86507486	6	BOLT, CARRIAGE, Short NK, M8 x 20, Cl8.8, Full Thd,
12	9706690	7	NUT, M8, Cl 8,
13	373667	2	PLATE, , FOR 3.85M UNLOADING AUGER ONLY
13	84004207	2	PLATE, , FOR 4.65M AND 5.20M UNLOADING AUGER ONLY, -C5500
13	84031028	2	PLATE, STEEL, , FOR 4.65M AND 5.20M UNLOADING AUGER ONLY, D5500-
14	9512111	2	COVER, , -C5500
15	140086	6	WASHER,
16	120100	2	BOLT, Hex, M6 x 20, 8.8,
17	15896221	4	NUT, M6, Cl 10,
18	412649	2	WASHER, SPRING, Belleville, M6, , -C5500
19	9508665	1	PLATE, , -C5500
20	120104	1	SCREW, Hex, M8 x 20, 8.8,
21	43140	1	BOLT, Hex, M10 x 30, 8.8, Full Thd,
22	140045	3	WASHER, SPRING, Belleville, M10,
23	100016	2	NUT, M10, Cl 8,

04.44(01) GRASS SEED EQUIPMENT - ACCESSORIES

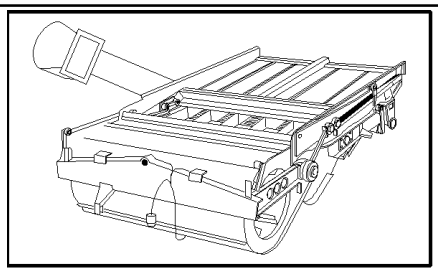

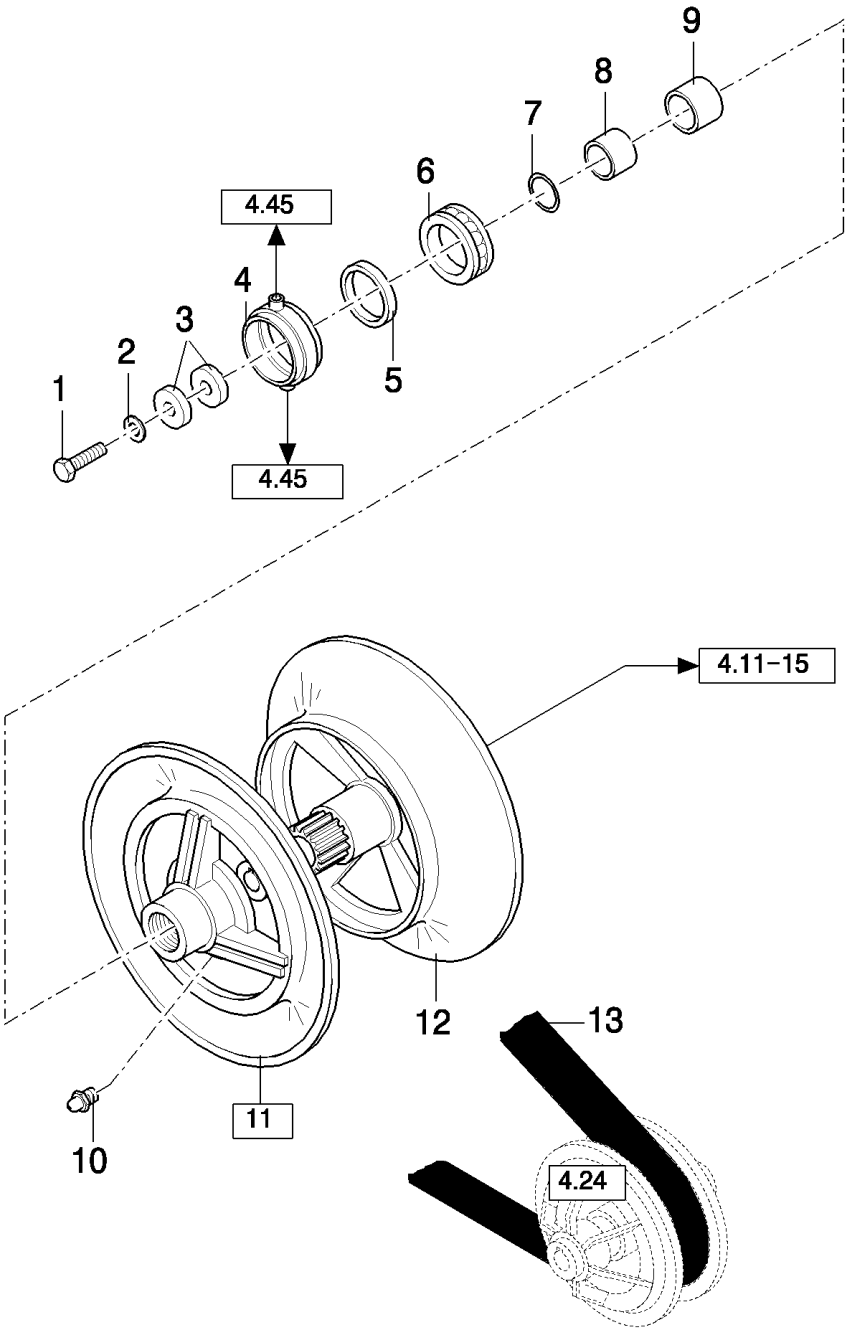

TX68 COMBINE - BASE UNIT

04.44(01) GRASS SEED EQUIPMENT - ACCESSORIES

ссылка	Номер детали	Кол-во	Описание
1	120070	1	BOLT, Hex, M10 x 60, 8.8,
2	140045	1	WASHER, SPRING, Belleville, M10,
3	140083	2	WASHER, 11MM
4	9502934	1	HOUSING, BEARING, , BSN C315
4	84078831	1	HOUSING, BEARING, , ASN D316
5	9502933	1	GASKET, , BSN C315
5	84818400	1	GASKET, , ASN D316
6	385803	1	BEARING ASSY,
7	84814916	1	O-RING,
8	9503683	1	SLEEVE,
9	89502347	1	SLEEVE,
10	321204	1	NIPPLE, LUBE, M6 x 1, 16mm lg,
11	84023321	1	VARIATOR, (7 to 10)
12	84023306	1	VARIATOR,
13	84023277	1	BELT, , FOR SELF-LEVELLING ONLY
13	84023278	1	BELT, TRANSMISSION, , FOR FIXED SHOE ONLY

04.45(01) GRASS SEED EQUIPMENT - ACCESSORIES

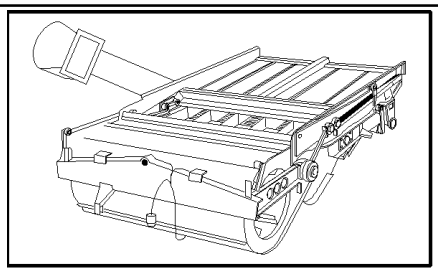

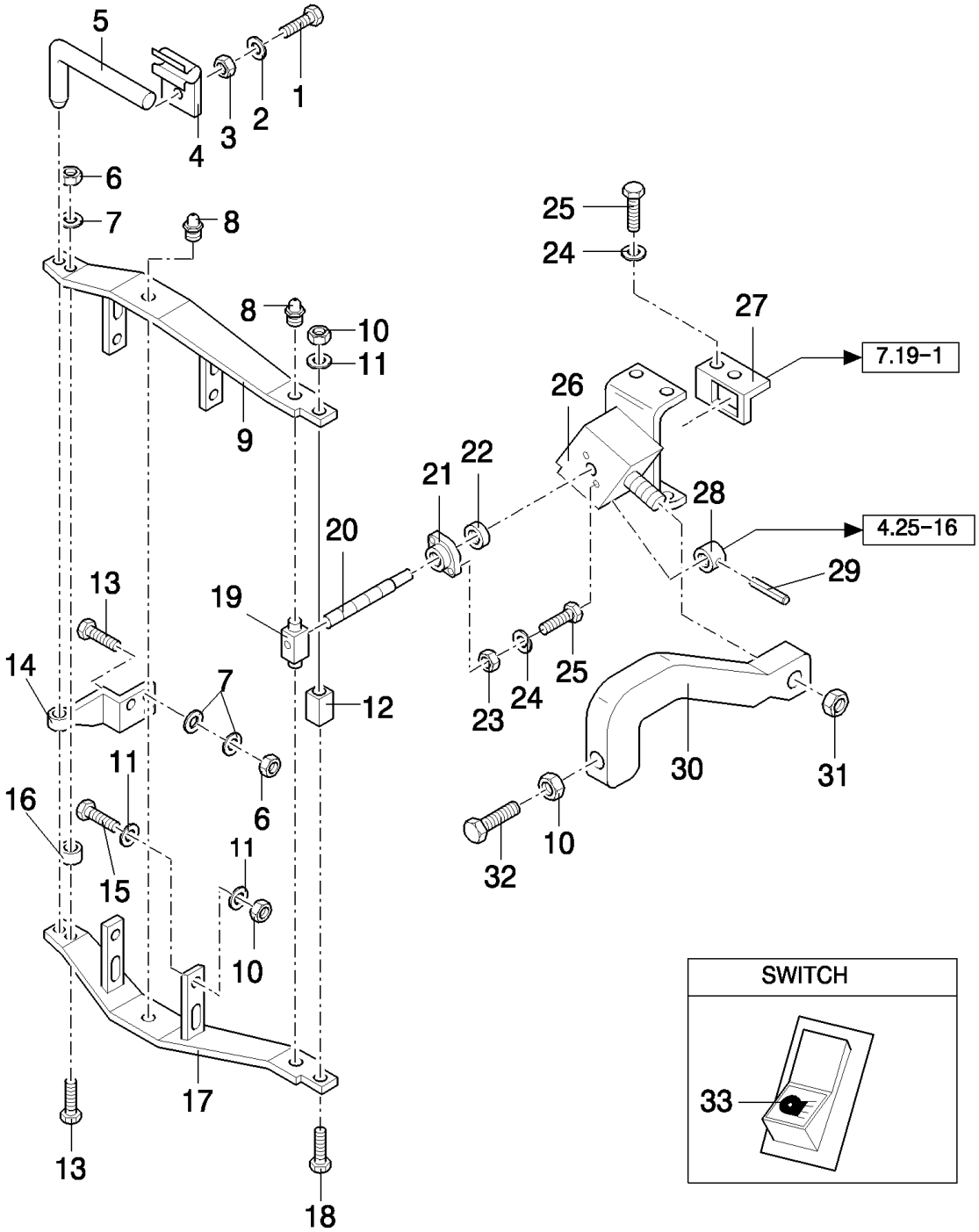

TX68 COMBINE - BASE UNIT

04.45(01) GRASS SEED EQUIPMENT - ACCESSORIES

ссылка	Номер детали	Кол-во	Описание
1	412064	1	SCREW, Hex, M4 x 16, 8.8, Full Thd,
2	322355	1	WASHER, Belleville, M4,
3	100012	1	NUT, M4, Cl 8,
4	323307	1	CLAMP,
5	84023276	1	PIN,
6	9706690	2	NUT, M8, Cl 8,
7	322358	3	WASHER, SPRING, Belleville, M8,
8	321204	2	NIPPLE, LUBE, M6 x 1, 16mm lg,
9	84023235	1	ARM,
10	100016	6	NUT, M10, Cl 8,
11	140045	AR	WASHER, SPRING, Belleville, M10,
12	84023232	1	BLOCK,
13	80120160	2	SCREW, M8x50
14	84023208	1	SUPPORT, , FOR SELF-LEVELLING ONLY
14	84023298	1	SUPPORT, , FOR FIXED SHOE ONLY
15	11106231	4	BOLT, Hex, M10 x 25, 10.9, Full Thd,
16	334056	1	BUSHING,
17	84023237	1	ARM,
18	43144	1	SCREW, Hex, M10 x 70, 8.8,
19	443796	1	ADJUSTER,
20	9811471	1	SHAFT,
21	443794	1	HOUSING, BEARING,
22	412431	1	BEARING ASSY,
23	15896221	2	NUT, M6, Cl 10,
24	322357	4	WASHER, SPRING, Belleville, M6,
25	80120099	4	BOLT, Hex, M6 x 16, 8.8,
26	84023197	1	SUPPORT, , FOR SELF-LEVELLING ONLY
26	84023287	1	SUPPORT, , FOR FIXED SHOE ONLY
27	84026038	1	BRACKET,
28	9811470	1	BUSHING,
29	300869	1	PIN, LOCK, M6 x 40, Slotted,
30	84023233	1	SUPPORT,
31	100037	1	NUT, M10 x 1.5, Cl 8,
32	120113	1	BOLT, Hex, M10 x 50, 8.8, Full Thd,
33	9817421	1	SWITCH, FAN,

04.46(01) "CORN COB MIX" AND HIGH RPM GRAIN ELEVATOR - ACCESSORIES

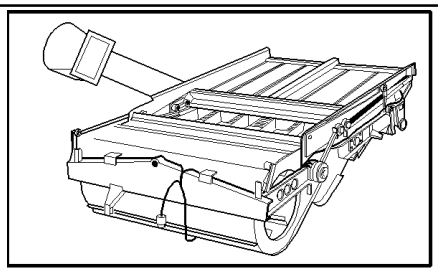

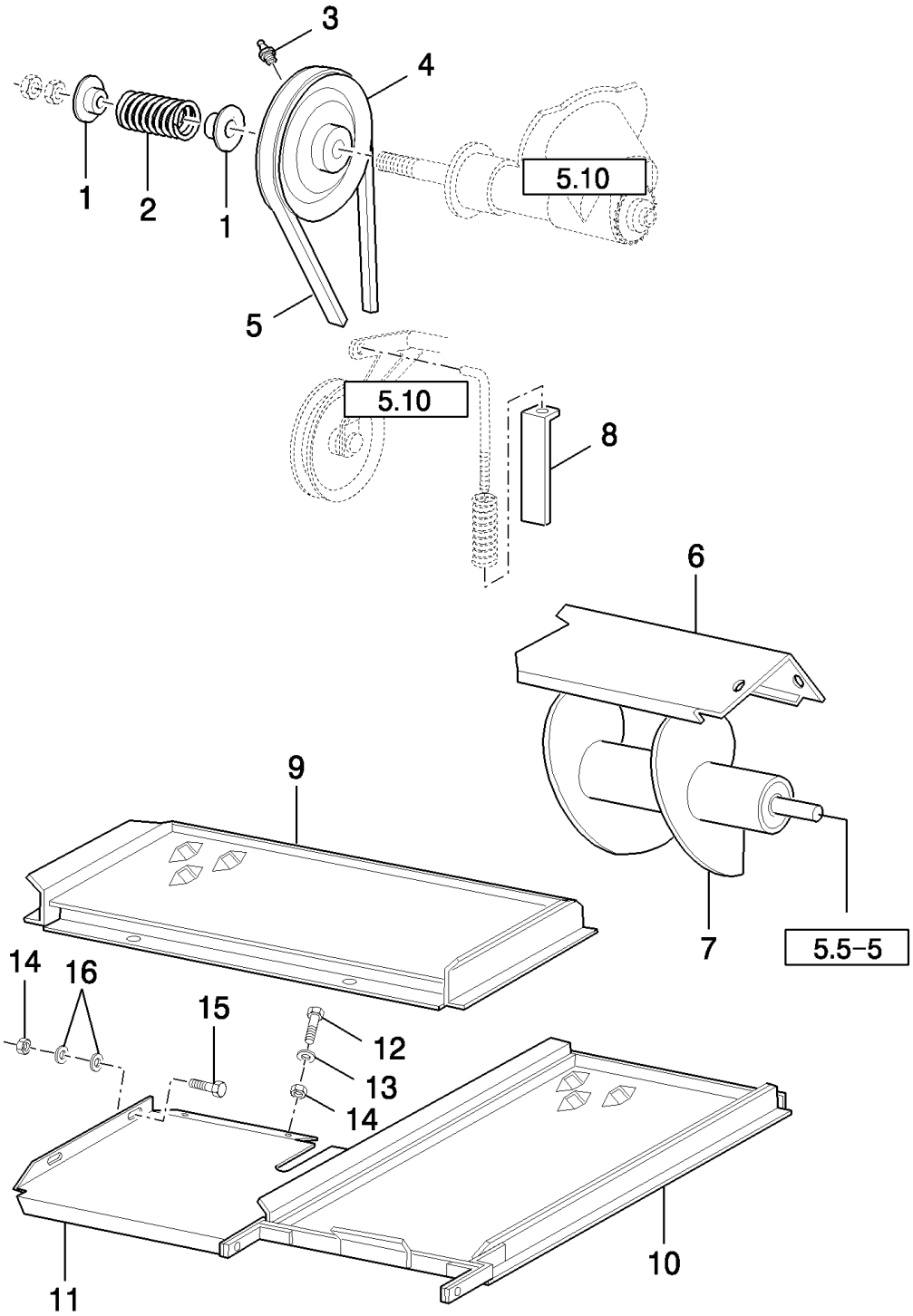

TX68 COMBINE - BASE UNIT

04.46(01) "CORN COB MIX" AND HIGH RPM GRAIN ELEVATOR - ACCESSORIES

ссылка	Номер детали	Кол-во	Описание
1	443462	2	BUSHING,
2	420927	1	SPRING,
3	321204	1	NIPPLE, LUBE, M6 x 1, 16mm lg,
4	80454061	1	PULLEY, , ALSO FOR HIGH RPM
5	84005357	1	BELT, , ALSO FOR HIGH RPM
6	751239	1	PLATE, STEEL, , FOR TX66-68 ONLY
6	84041339	1	SHIELD, , FOR TX67 ONLY
6	80454190	1	COVER, , FOR TX62-63-64-65 ONLY
7	9832497	1	AUGER, , FOR TX66-68 ONLY
7	84041338	1	AUGER, , FOR TX67 ONLY
7	9832498	1	AUGER, , FOR TX62-63-64-65 ONLY
8	80747259	1	INDICATOR,
9	9818294	1	GRILLE, , FOR TX66-67-68 ONLY
9	9501766	1	SIEVE, , FOR TX62-63-64-65 ONLY
10	751220	2	SIEVE, , FOR TX66-67-68 ONLY
10	448831	1	SIEVE, , FOR TX62-63-64-65 ONLY
11	751213	1	PLATE, STEEL, , FOR TX66-67-68 ONLY
11	448902	1	COVER, , FOR TX62-63-64-65 ONLY
12	80120099	4	BOLT, Hex, M6 x 16, 8.8,
13	322357	4	WASHER, SPRING, Belleville, M6,
14	353308	6	NUT, M6 x 1, Cl 8,
15	120101	2	BOLT, Hex, M6 x 30, 8.8, Full Thd,
16	140015	8	WASHER, 6MM

SECTIONS	**SECTIONS**	**SECCIONES**	**AFSNIT**
SEZIONI	**ABSCHNITTE**	**SECÇÕES**	**SECTIES**

SEC. 5

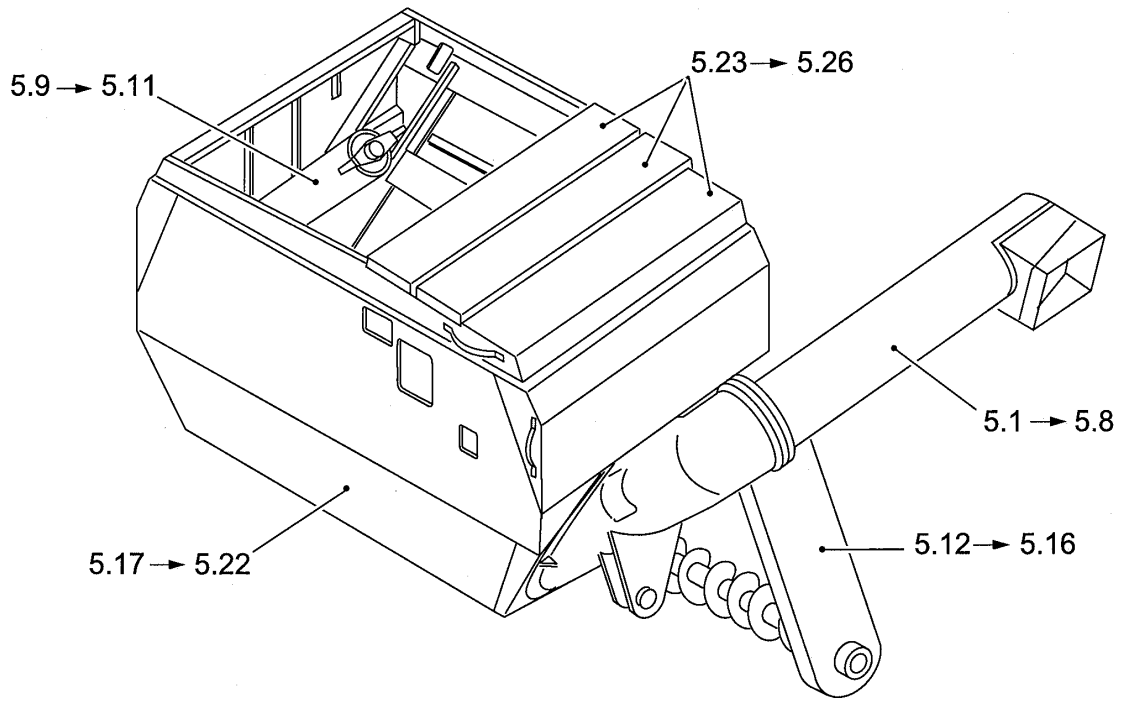

ссылка	Номер детали	Кол-во	Описание

05.01(01) UNLOADING AUGER DRIVE

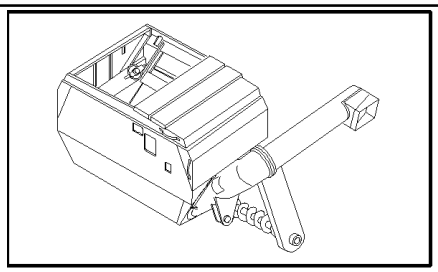

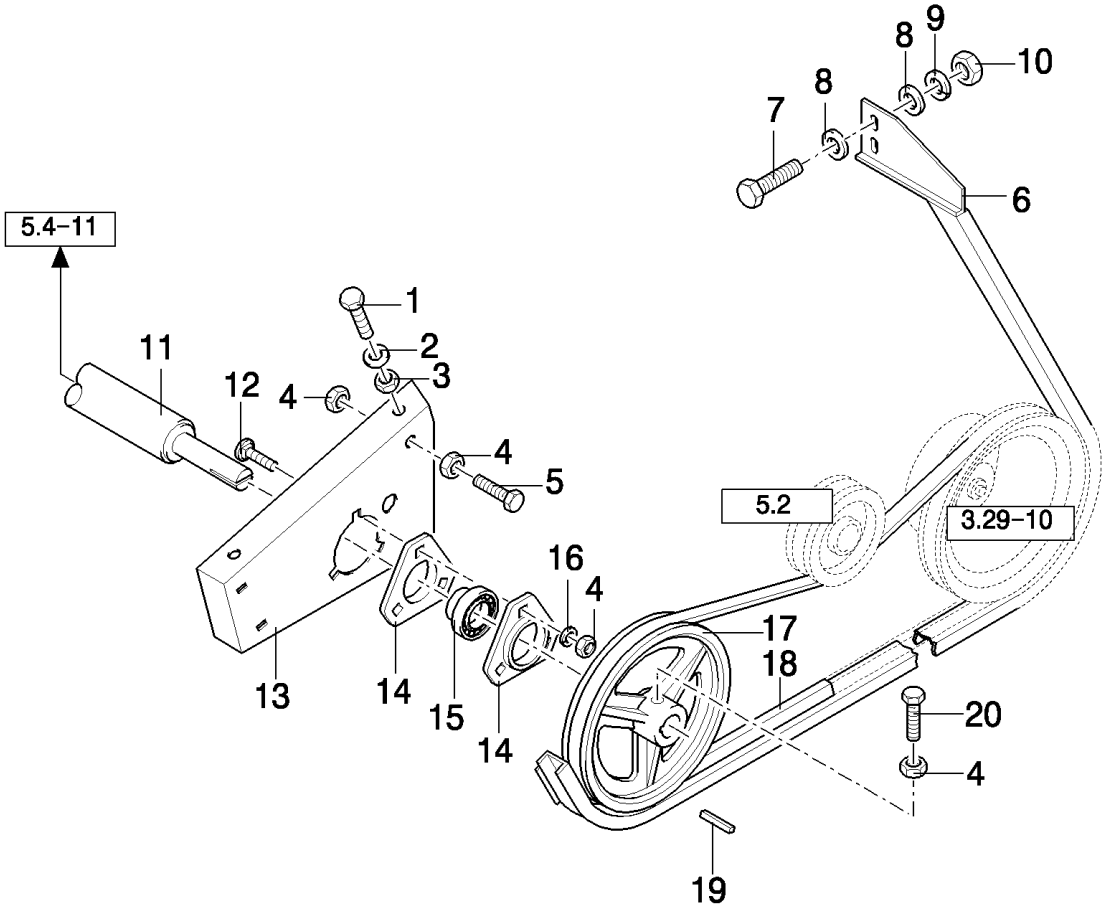

TX68 COMBINE - BASE UNIT

05.01(01) UNLOADING AUGER DRIVE

ссылка	Номер детали	Кол-во	Описание
1	300388	2	SCREW, Hex, M12 x 25, 8.8,
2	140046	2	WASHER, Belleville, M12, 9MM
3	337475	2	NUT, M12, Cl 10,
4	100016	6	NUT, M10, Cl 8,
5	120073	1	BOLT, Hex, M10 x 80, 8.8,
6	748425	1	GUIDE,
7	43127	4	BOLT, Hex, M8 x 25, 8.8,
8	378243	8	WASHER, M8,
9	322358	8	WASHER, SPRING, Belleville, M8,
10	9706690	8	NUT, M8, Cl 8,
11	84004091	1	SHAFT, , FOR TX66-68 ONLY, -C5660
11	84021460	1	SHAFT, , FOR TX66-68 ONLY, D5660-
11	429287	1	SHAFT, , FOR TX62-64-65 ONLY, -C5660
11	84021457	1	SHAFT, , FOR TX62-63-64-65 ONLY, D5660-
11	84036546	1	SHAFT, , FOR TX67 ONLY
12	338949	3	BOLT, CARRIAGE, Short NK, M10 x 25, Cl8.8, Full Thd,
13	441119	1	PLATE,
14	86548970	2	FLANGE,
15	325106	1	BEARING ASSY,
16	140045	3	WASHER, SPRING, Belleville, M10,
17	9813935	1	PULLEY,
18	9814069	1	BELT, , BSN C309
18	84817629	1	BELT, TRANSMISSION, , ASN D310
19	170010	2	KEY,
20	43140	1	BOLT, Hex, M10 x 30, 8.8, Full Thd,

05.02(01) UNLOADING AUGER DRIVE

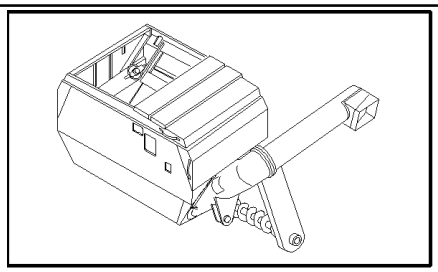

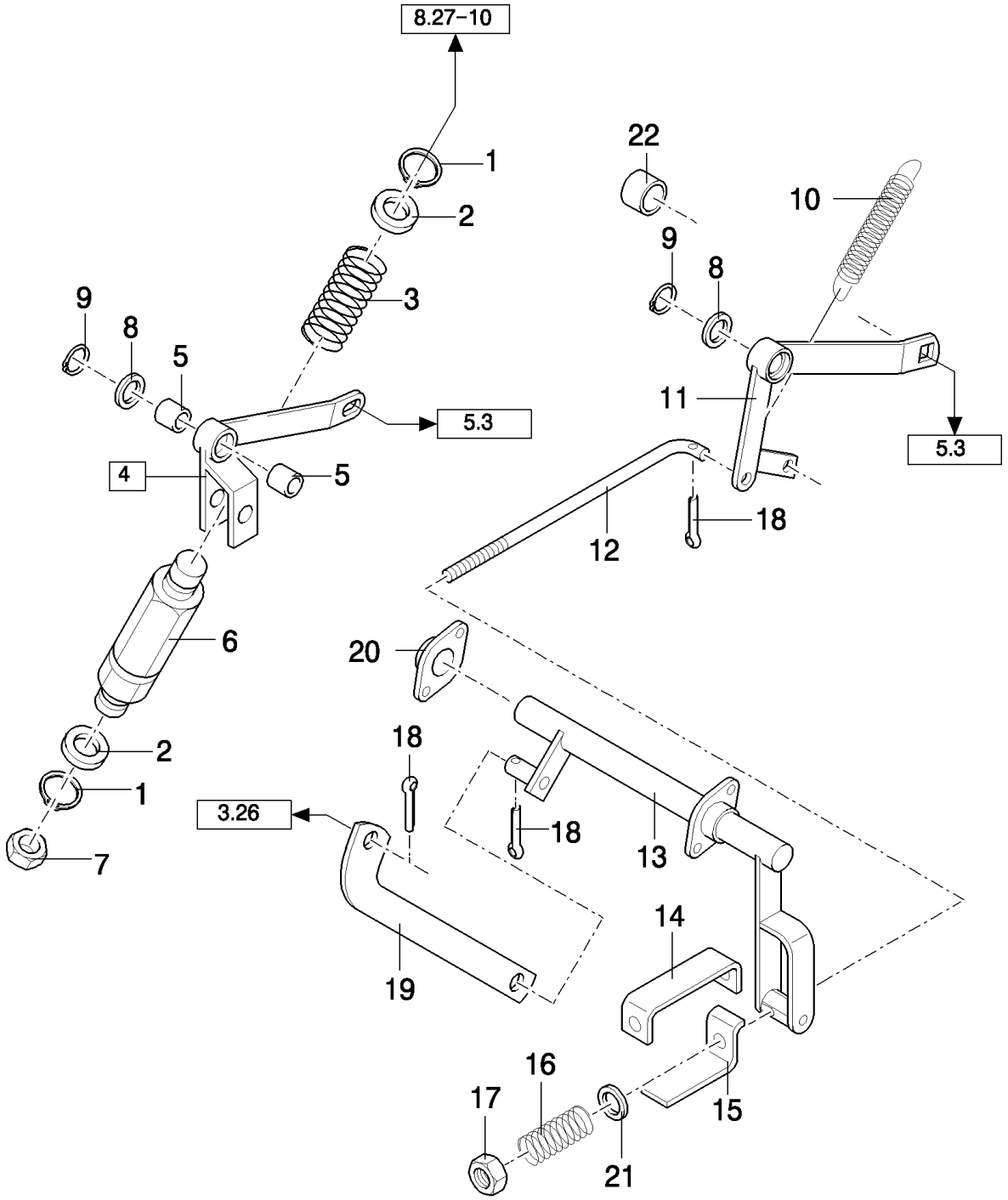

TX68 COMBINE - BASE UNIT

05.02(01) UNLOADING AUGER DRIVE

ссылка	Номер детали	Кол-во	Описание
1	370001	2	RING, SNAP, M22, Ext, , FOR TX64-65-66-67-68 ONLY, FOR TX63 WITH REMOTE CONTROL
2	84000320	2	WASHER, 22MM, FOR TX63 WITH REMOTE CONTROL, FOR TX64-65-66-67-68 ONLY
3	435967	1	SPRING, , FOR TX64-65-66-67-68 ONLY, FOR TX63 WITH REMOTE CONTROL
4	9814479	1	ARM, (5), FOR TX63 WITH REMOTE CONTROL, FOR TX64-65-66-67-68 ONLY
5	382975	2	SLEEVE, , FOR TX64-65-66-67-68 ONLY, FOR TX63 WITH REMOTE CONTROL
6	9814531	1	NUT, , FOR TX63 WITH REMOTE CONTROL, FOR TX64-65-66-67-68 ONLY
7	364164	1	NUT, Thin, M16 x 1.5, Cl 04, M16, FOR TX64-65-66-67-68 ONLY, FOR TX63 WITH REMOTE CONTROL
8	140103	1	WASHER,
9	370002	1	RING, SNAP, M25, Ext,
10	180039	1	SPRING, , FOR TX62-63 ONLY
11	442928	1	ARM, , FOR TX62-63 ONLY
12	9819739	1	PLATE, ADJUSTING, , FOR TX62-63 ONLY
13	9819711	1	SHAFT, , FOR TX62-63 ONLY
14	423979	1	SUPPORT, , FOR TX62-63 ONLY
15	457103	1	INDICATOR, , FOR TX62-63 ONLY
16	322297	1	SPRING, , FOR TX62-63 ONLY
17	412126	1	NUT, LOCK, M12 x 1.75, Cl 8, , FOR TX62-63 ONLY
18	130004	3	PIN, SPLIT (COTTER), M3.2 x 25, , FOR TX62-63 ONLY
19	9819703	1	LINK, CONNECTING, , FOR TX62-63 ONLY
20	338712	1	FLANGE, , FOR TX62-63 ONLY
21	378245	1	WASHER, M12, 13MM, FOR TX62-63 ONLY
22	334056	1	BUSHING, , FOR TX62-63 ONLY

05.03(01) IDLER UNLOADING AUGER DRIVE

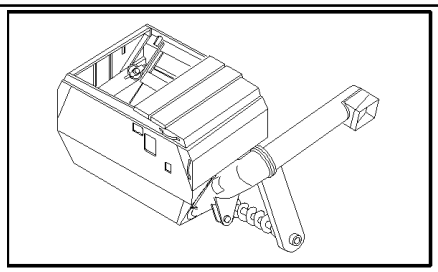

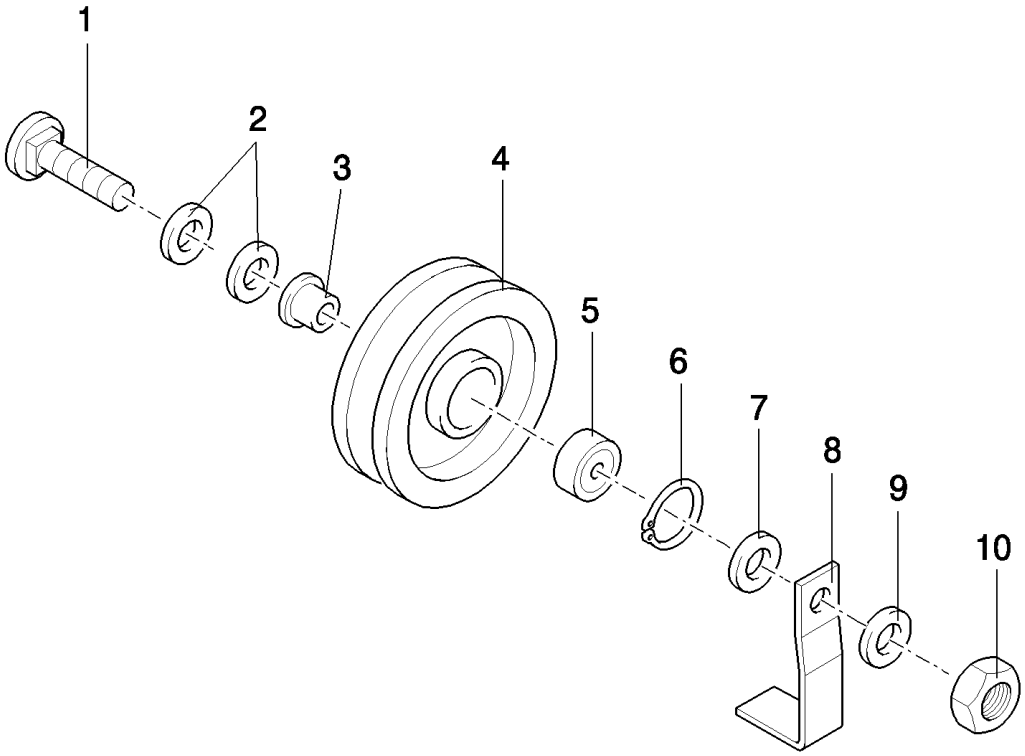

TX68 COMBINE - BASE UNIT

05.03(01) IDLER UNLOADING AUGER DRIVE

ссылка	Номер детали	Кол-во	Описание
1	120047	1	BOLT, CARRIAGE, Short NK, M16 x 70, Cl8.8,
2	140090	AR	WASHER, 17MM
3	441111	1	BUSHING,
4	9819460	1	WHEEL, IDLER,
5	443898	1	BEARING, BALL,
6	370011	1	RING, SNAP, M52, Int,
7	140093	1	WASHER,
8	424562	1	GUIDE,
9	140018	1	WASHER, M12 x 24 x 2.5, 16MM
10	100020	1	NUT, M16, Cl 8,

05.04(01) UNLOADING AUGER DRIVE

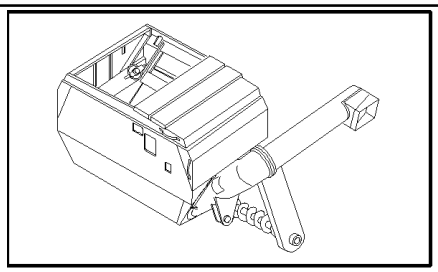

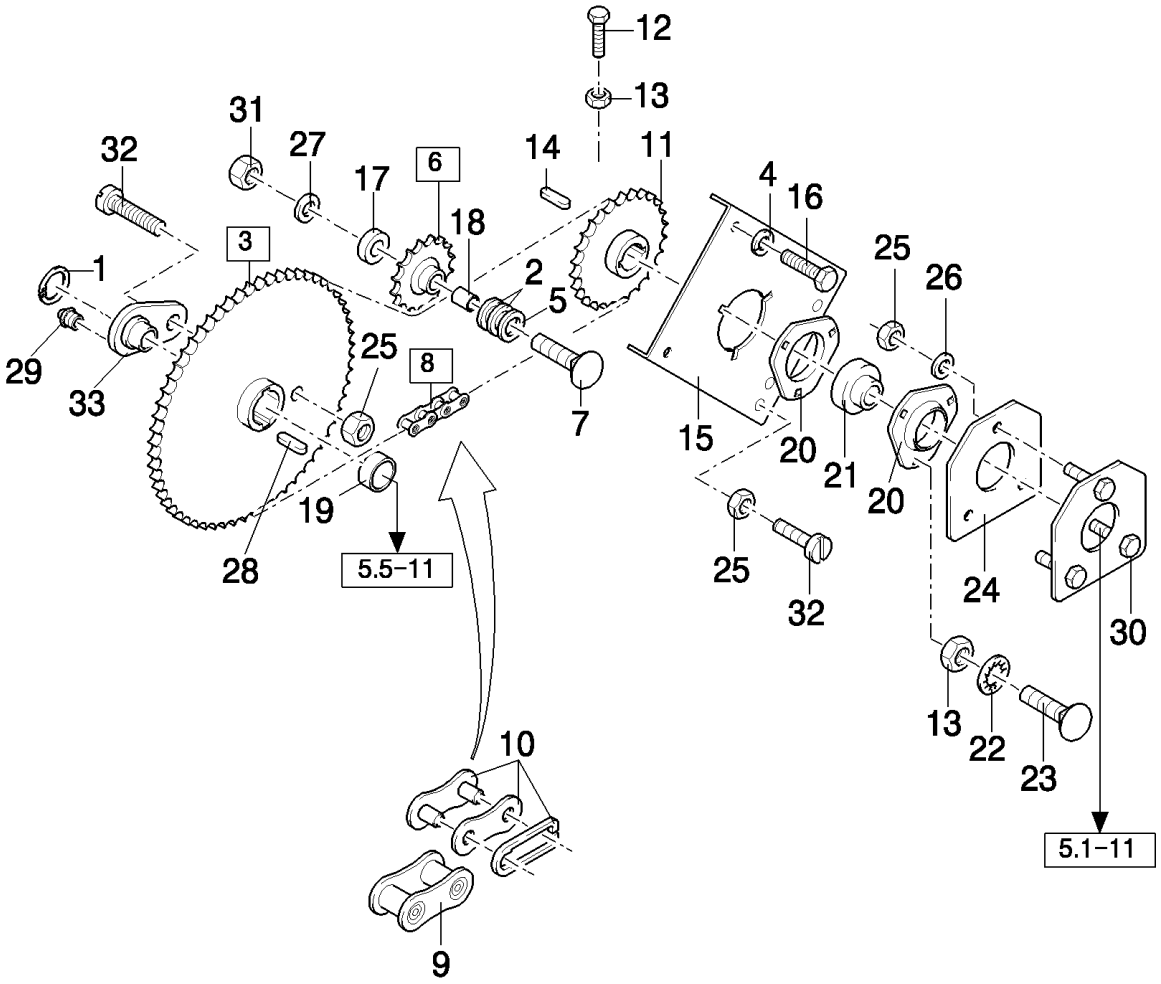

TX68 COMBINE - BASE UNIT

05.04(01) UNLOADING AUGER DRIVE

ссылка	Номер детали	Кол-во	Описание
1	11068376	1	RING, SNAP, M35, Ext x 1.5 Thk,
2	140175	AR	WASHER, 13MM
3	9814572	1	SPROCKET, DRIVEN, 51T (19), -C5660
3	84019661	1	SPROCKET, DRIVEN, 51T (19), D5660-
4	140046	2	WASHER, Belleville, M12,
5	333040	1	WASHER, 18MM
6	9507227	1	SPROCKET, DRIVEN, , -C5660
6	9831670	1	SPROCKET, (17), D5660-
7	334682	1	BOLT, CARRIAGE, Short NK, M12 x 50, Cl8.8, Full Thd, , -C5660
7	412097	1	BOLT, CARRIAGE, Short NK, M12 x 60, Cl8.8, , D5660-
8	424107	1	CHAIN, (9,10)
9	25808	AR	LINK, CHAIN,
10	165590	1	LINK, CONNECTING,
11	9819337	1	SPROCKET,
12	43138	1	SCREW, Hex, M10 x 20, 8.8, Full Thd,
13	100016	4	NUT, M10, Cl 8,
14	170010	2	KEY,
15	9839647	1	PLATE,
16	43151	2	SCREW, Hex, M12 x 20, 8.8, Full Thd,
17	443898	1	BEARING, BALL,
18	431990	1	BUSHING, , -C5660
18	84021454	1	BUSHING, , D5660-
19	9819016	1	BUSHING,
20	86548970	2	FLANGE,
21	325106	2	BEARING ASSY,
22	140045	AR	WASHER, SPRING, Belleville, M10,
23	338949	AR	BOLT, CARRIAGE, Short NK, M10 x 25, Cl8.8, Full Thd,
24	9819610	2	GASKET,
25	412250	6	NUT, LOCK, M8 x 1.25, Cl 8,
26	378246	6	WASHER, 17MM
27	378245	1	WASHER, M12, 13MM
28	354775	2	KEY,
29	321204	1	NIPPLE, LUBE, M6 x 1, 16mm lg,
30	9819609	2	PLATE,
31	412126	1	NUT, LOCK, M12 x 1.75, Cl 8,
32	9819398	6	SCREW,
33	9814553	1	ARM, , -C5660
33	84019660	1	HUB, , D5660-

05.05(01) UNLOADING AUGER DRIVE

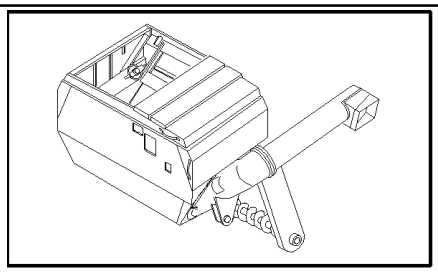

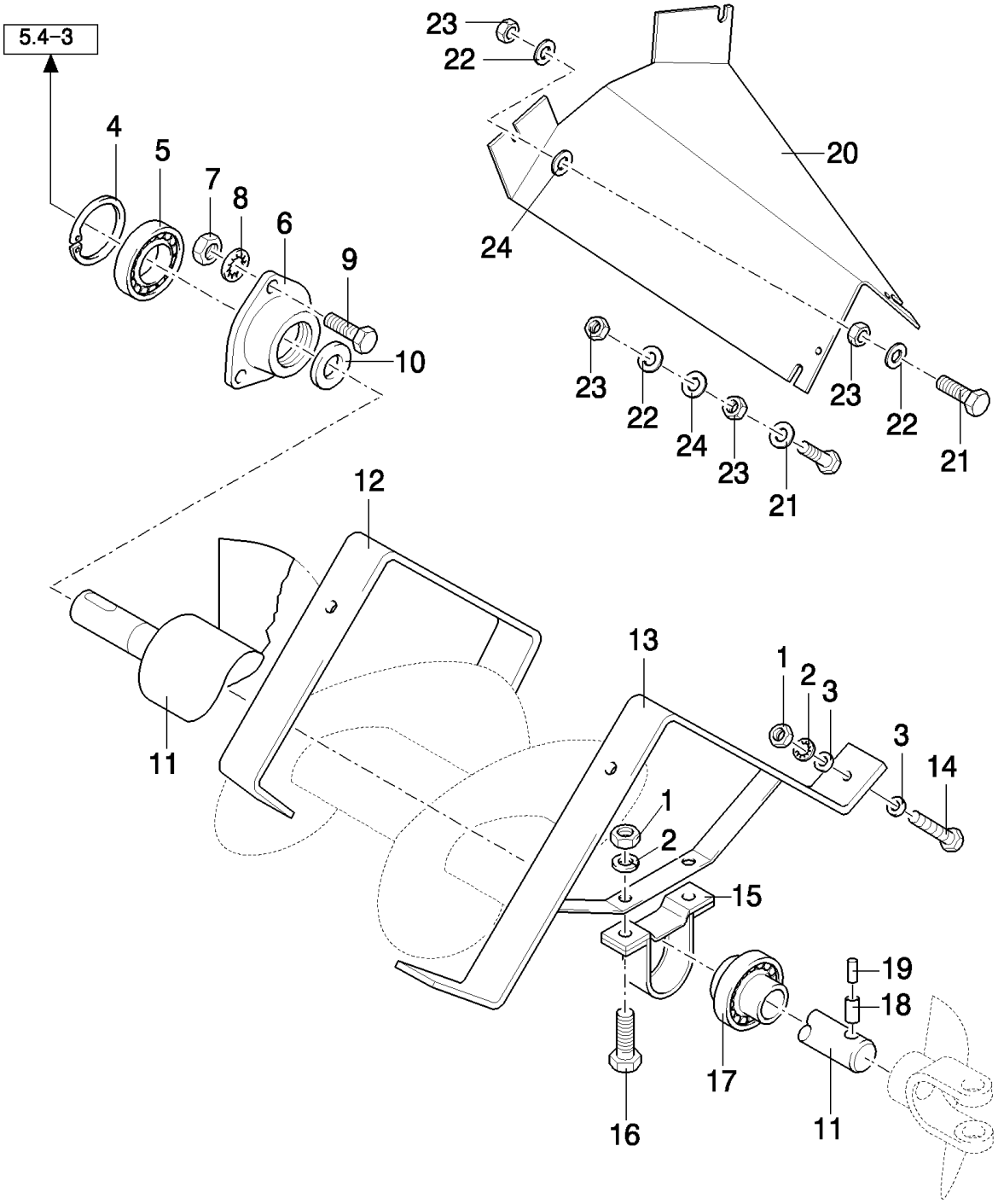

TX68 COMBINE - BASE UNIT

05.05(01) UNLOADING AUGER DRIVE

ссылка	Номер детали	Кол-во	Описание
1	100016	AR	NUT, M10, Cl 8,
2	140045	AR	WASHER, SPRING, Belleville, M10,
3	378244	AR	WASHER, M10,
4	370018	1	RING, SNAP,
5	25953	1	BEARING, BALL, , -C1237
5	84438926	1	BEARING ASSY, , D1238-
6	9819092	1	FLANGE,
7	9706690	3	NUT, M8, Cl 8,
8	322358	3	WASHER, SPRING, Belleville, M8,
9	120104	3	SCREW, Hex, M8 x 20, 8.8,
10	220010	1	ELEMENT, SEALING,
11	9814550	1	AUGER, , AUGER "CORN COB MIX", SEE FIG. 04.46 REF.7, FOR TX66-68 ONLY
11	84036548	1	AUGER, , FOR TX67 ONLY, AUGER "CORN COB MIX", SEE FIG. 04.46 REF.7
11	9814551	1	AUGER, , AUGER "CORN COB MIX", SEE FIG. 04.46 REF.7, FOR TX62-64-65 ONLY
12	9504369	1	SUPPORT,
13	429270	1	SUPPORT,
14	43140	5	BOLT, Hex, M10 x 30, 8.8, Full Thd,
15	410433	1	HOUSING, BEARING,
16	9819398	1	SCREW,
17	212606	1	BEARING ASSY,
18	130054	1	PIN, LOCK, M13 x 55, Slotted,
19	412689	1	PIN, LOCK, M8 x 50, Slotted,
20	9812154	1	GUARD,
21	120112	4	BOLT, Hex, M10 x 40, 8.8, Full Thd,
22	140045	AR	WASHER, SPRING, Belleville, M10,
23	100016	AR	NUT, M10, Cl 8,
24	378246	AR	WASHER, 10MM

05.06(01) UNLOADING AUGER

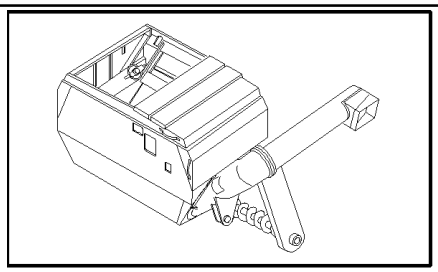

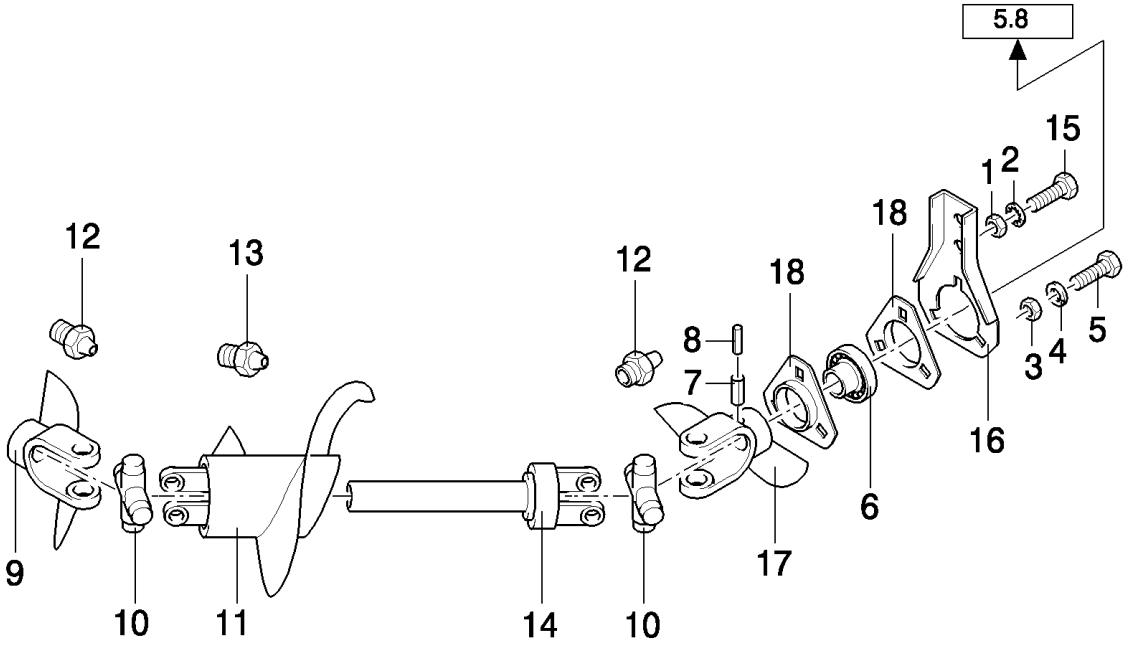

TX68 COMBINE - BASE UNIT

05.06(01) UNLOADING AUGER

ссылка	Номер детали	Кол-во	Описание
1	337475	AR	NUT, M12, Cl 10,
2	140046	AR	WASHER, Belleville, M12,
3	100016	AR	NUT, M10, Cl 8,
4	140045	AR	WASHER, SPRING, Belleville, M10,
5	338949	AR	BOLT, CARRIAGE, Short NK, M10 x 25, Cl8.8, Full Thd,
6	212606	1	BEARING ASSY,
7	130054	1	PIN, LOCK, M13 x 55, Slotted,
8	412689	1	PIN, LOCK, M8 x 50, Slotted,
9	916104	1	YOKE,
10	916025	2	SPIDER,
11	920224	1	AUGER,
12	412014	2	NIPPLE, LUBE,
13	321204	1	NIPPLE, LUBE, M6 x 1, 16mm lg,
14	916024	1	YOKE,
15	9706687	2	SCREW, Hex, M12 x 30, 8.8,
16	399601	1	SUPPORT,
17	916103	1	YOKE,
18	410434	2	FLANGE,

05.07(01) UNLOADING AUGER AND TUBE

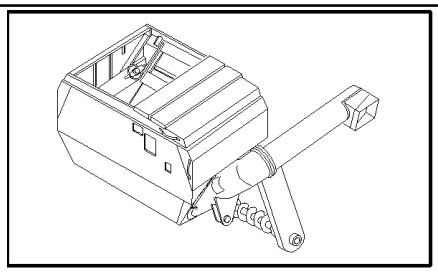

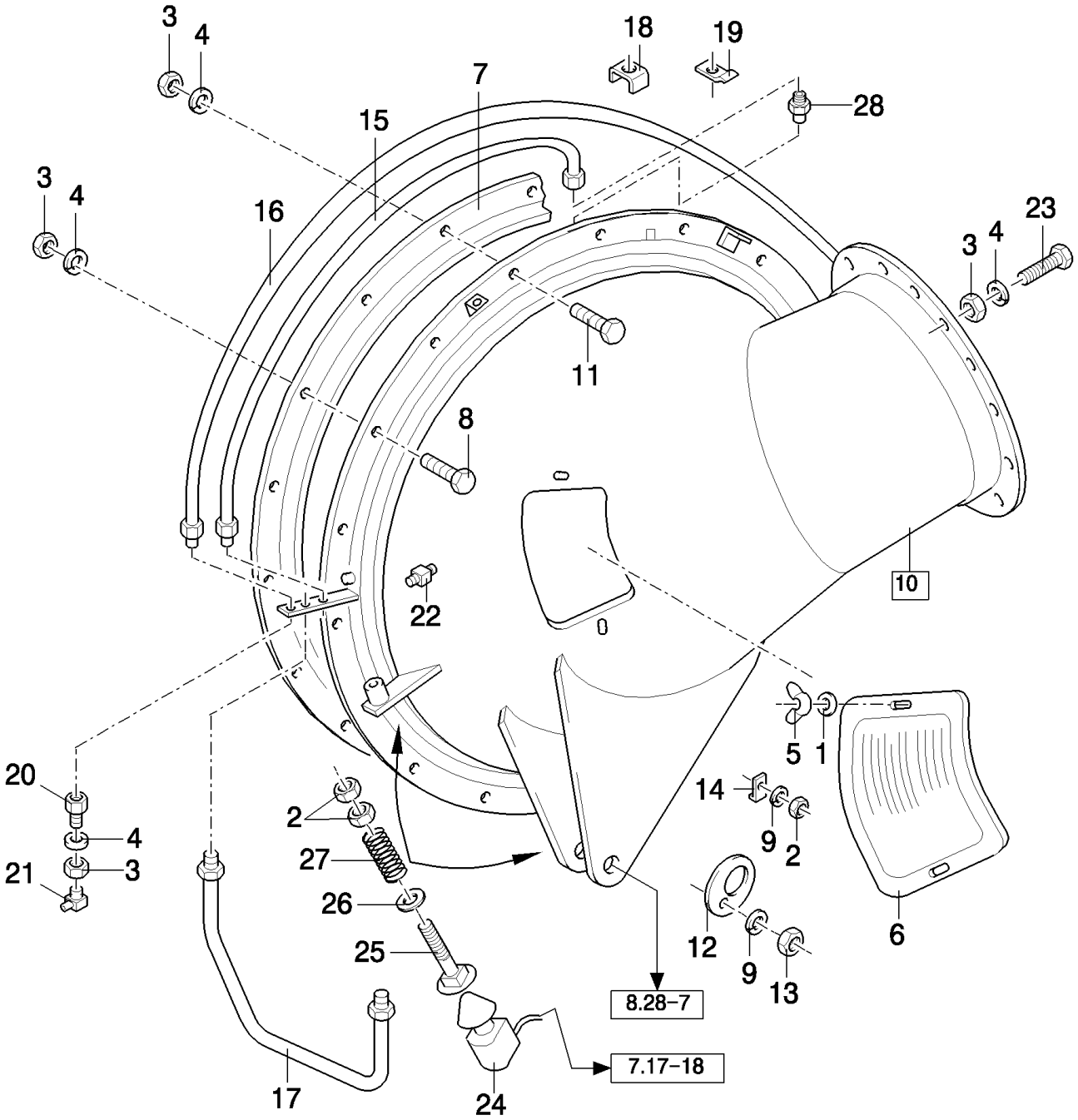

TX68 COMBINE - BASE UNIT

05.07(01) UNLOADING AUGER AND TUBE

ссылка	Номер детали	Кол-во	Описание
1	322357	28	WASHER, SPRING, Belleville, M6,
2	9706690	AR	NUT, M8, Cl 8,
3	100016	AR	NUT, M10, Cl 8,
4	140045	AR	WASHER, SPRING, Belleville, M10,
5	84814892	2	NUT, WING, M6 x 1,
6	9812875	1	COVER,
7	80433627	1	RING,
8	11106231	16	BOLT, Hex, M10 x 25, 10.9, Full Thd,
9	322358	AR	WASHER, SPRING, Belleville, M8,
10	9812634	1	JOINT, UNIVERSAL, (28), -C1169
10	84989684	1	JOINT, UNIVERSAL, (28), D1170-
11	43140	1	BOLT, Hex, M10 x 30, 8.8, Full Thd,
12	429855	1	COVER,
13	412250	AR	NUT, LOCK, M8 x 1.25, Cl 8,
14	425093	1	CLIP,
15	9510485	1	TUBE, RIGID,
16	9510487	1	TUBE, RIGID, , -C4420
16	84014099	1	TUBE, RIGID, , D4420-
17	9510483	1	TUBE, RIGID,
18	336760	1	CLAMP,
19	336748	1	CLAMP,
20	9510459	3	CONNECTOR, HYD.,
21	323713	3	NIPPLE, LUBE,
22	323787	3	NIPPLE, LUBE,
23	43138	15	SCREW, Hex, M10 x 20, 8.8, Full Thd,
24	9507836	2	SWITCH,
25	366046	2	BOLT, CARRIAGE, Short NK, M8 x 80, Cl8.8, M8x80
26	140042	2	WASHER, M10 x 34 x 3, 8MM
27	445319	2	SPRING,
28	89512660	3	CONNECTOR, HYD.,

05.08(01) UNLOADING AUGER AND TUBE

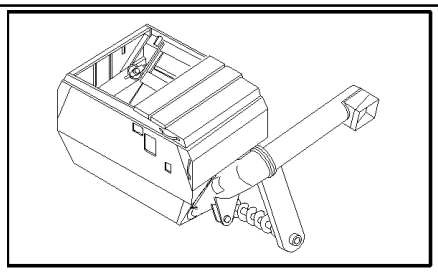

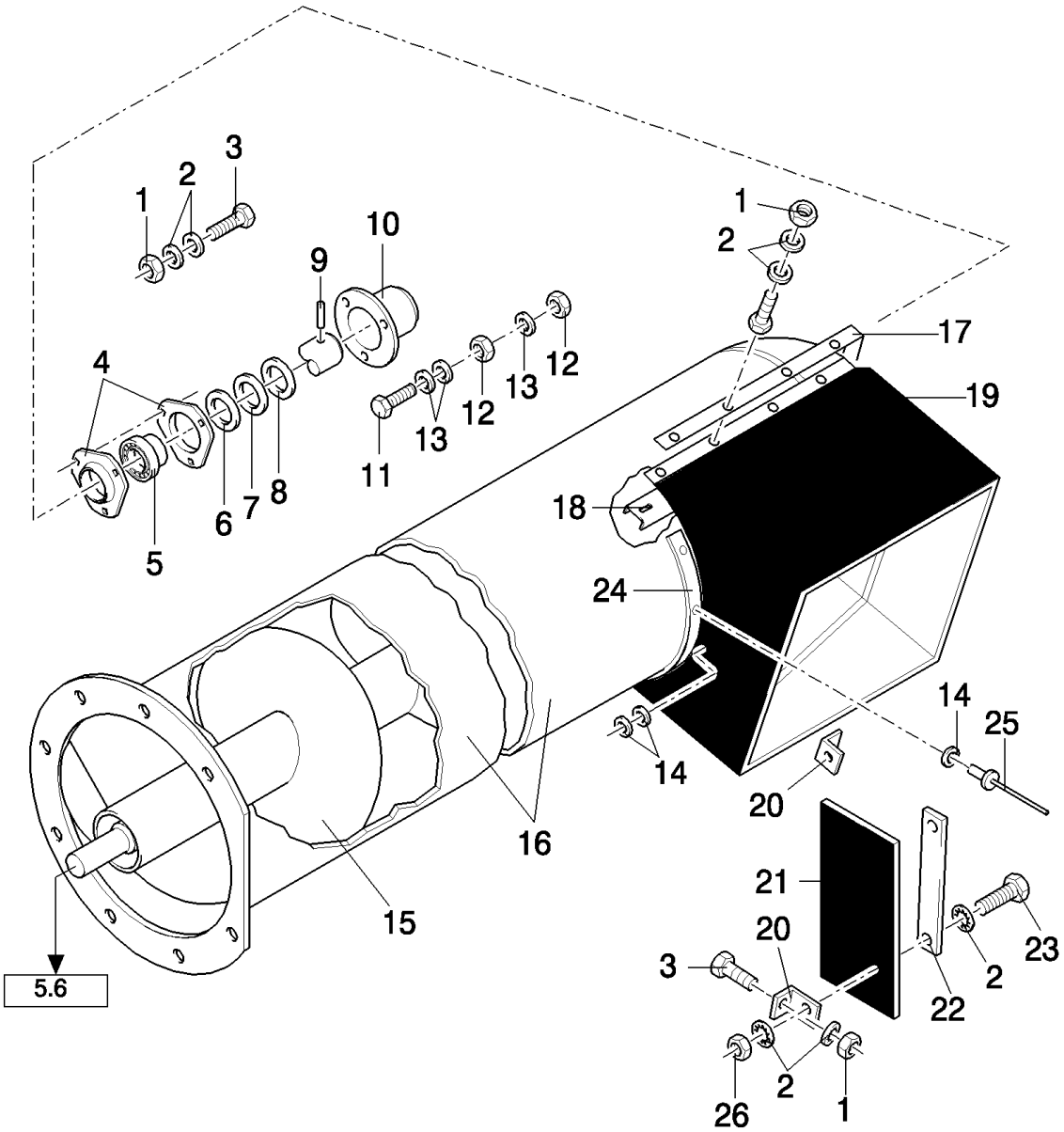

TX68 COMBINE - BASE UNIT

05.08(01) UNLOADING AUGER AND TUBE

ссылка	Номер детали	Кол-во	Описание
1	15896221	15	NUT, M6, Cl 10,
2	322357	28	WASHER, SPRING, Belleville, M6,
3	80120099	5	BOLT, Hex, M6 x 16, 8.8,
4	86548970	2	FLANGE,
5	325106	1	BEARING ASSY,
6	84814900	AR	WASHER, 31MM
7	84814901	AR	WASHER, 31MM
8	441176	AR	WASHER, 31MM
9	14610270	1	PIN, LOCK, M10 x 45, Slotted,
10	334568	1	COVER,
11	120112	3	BOLT, Hex, M10 x 40, 8.8, Full Thd,
12	100016	3	NUT, M10, Cl 8,
13	140045	3	WASHER, SPRING, Belleville, M10,
14	335872	15	WASHER, 4MM
15	84023189	1	AUGER, L:4.65M
15	455429	1	AUGER, L:3.85M
15	84056827	1	AUGER, L:5.20M
16	84011783	1	TUBE, L:3.85M, -C1169
16	84429193	1	TUBE, L:3.85M, D1170-
16	84000196	1	TUBE, L:4.65M, -C5620
16	84019924	1	TUBE, L:4.65M, -C0006
16	84032889	1	TUBE, L:4.65M, -C0052
16	84429192	1	TUBE, L:4.65M, D1170-
16	84056828	1	TUBE, L:5.20M, -C1169
16	84429191	1	TUBE, L:5.20M, D1170-
17	389240	2	PLATE,
18	399602	1	SUPPORT,
19	9811657	1	CANVAS,
20	333349	2	BRACKET,
21	439876	1	CANVAS,
22	389623	1	PLATE,
23	120100	10	BOLT, Hex, M6 x 20, 8.8,
24	455862	1	SUPPORT,
25	425522	7	RIVET,
26	353308	2	NUT, M6 x 1, Cl 8,

05.09(01) GEARBOX "BUBBLE-UP"

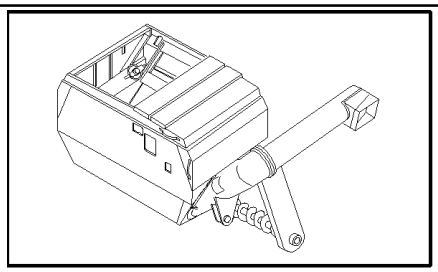

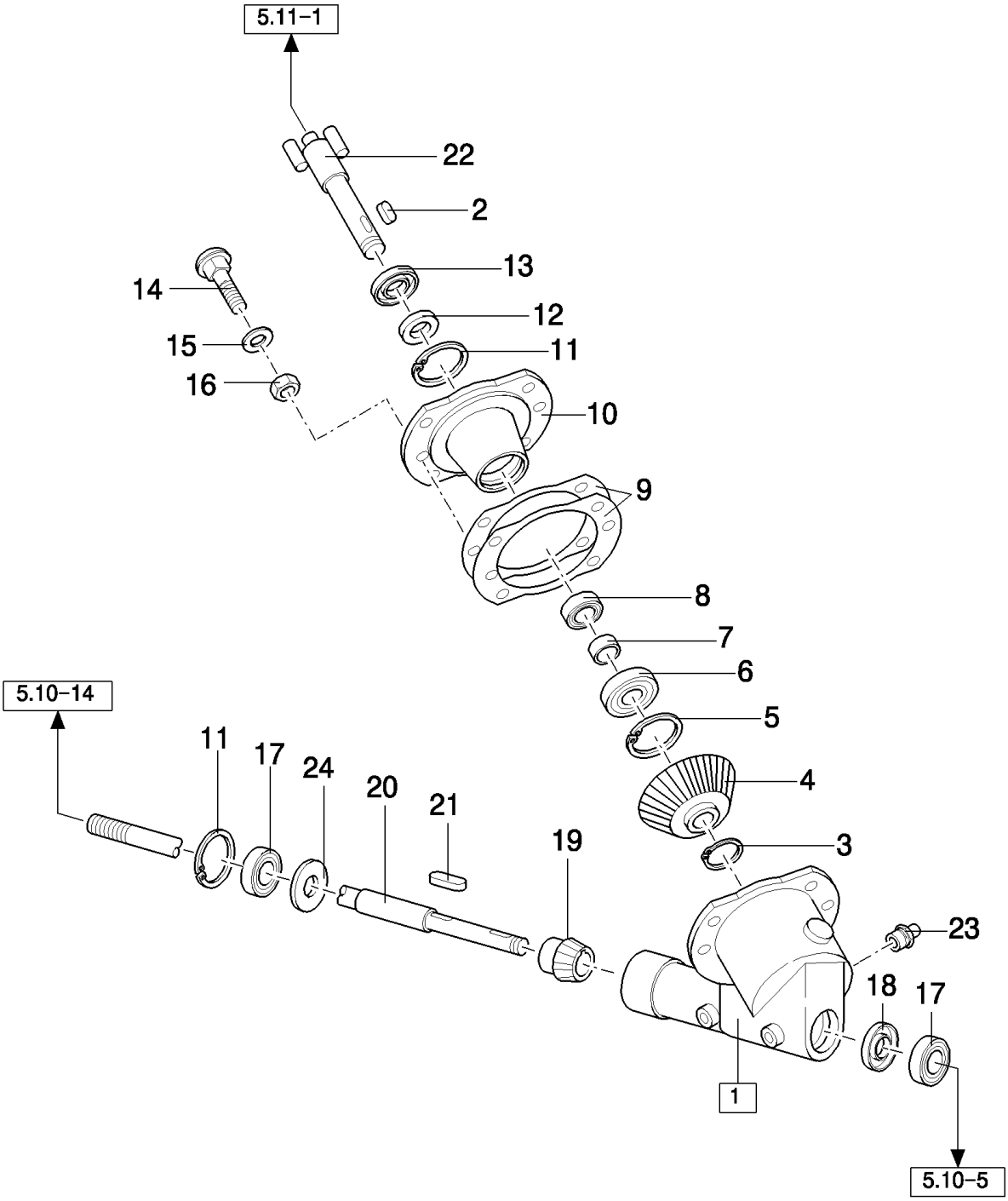

TX68 COMBINE - BASE UNIT

05.09(01) GEARBOX "BUBBLE-UP"

ссылка	Номер детали	Кол-во	Описание
1	84005295	1	GEARBOX, , INCL. ALL REFS. EXCEPT REFS.14 TO 16, BSN C375
1	84819563	1	GEARBOX, , INCL. ALL REFS. EXCEPT REFS.14 TO 16, ASN D376
2	170006	1	KEY,
3	370002	1	RING, SNAP, M25, Ext,
4	433641	1	GEAR,
5	370012	1	RING, SNAP, M62, Int,
6	159863	1	BEARING ASSY,
7	428640	1	BUSHING,
8	84057966	1	BEARING, BALL,
9	428639	AR	PLATE, ADJUSTING,
10	433643	1	FLANGE,
11	370011	2	RING, SNAP, M52, Int,
12	378273	1	SEAL,
13	445050	1	PROTECTION CAP,
14	374892	4	BOLT, CARRIAGE, Short NK, M10 x 40, Cl8.8, Full Thd,
15	140045	4	WASHER, SPRING, Belleville, M10,
16	100016	4	NUT, M10, Cl 8,
17	443898	2	BEARING, BALL,
18	391120	1	ELEMENT, SEALING,
19	433640	1	GEAR,
20	9819823	1	SHAFT,
21	396143	1	KEY,
22	9510018	1	SHAFT,
23	321204	1	NIPPLE, LUBE, M6 x 1, 16mm lg,
24	84011046	1	RING,

05.10(01) GEARBOX DRIVE "BUBBLE-UP"

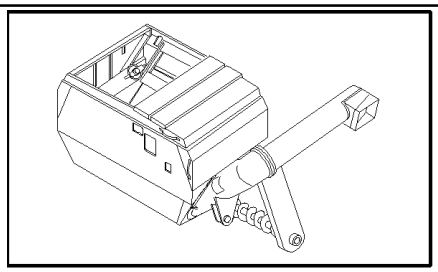

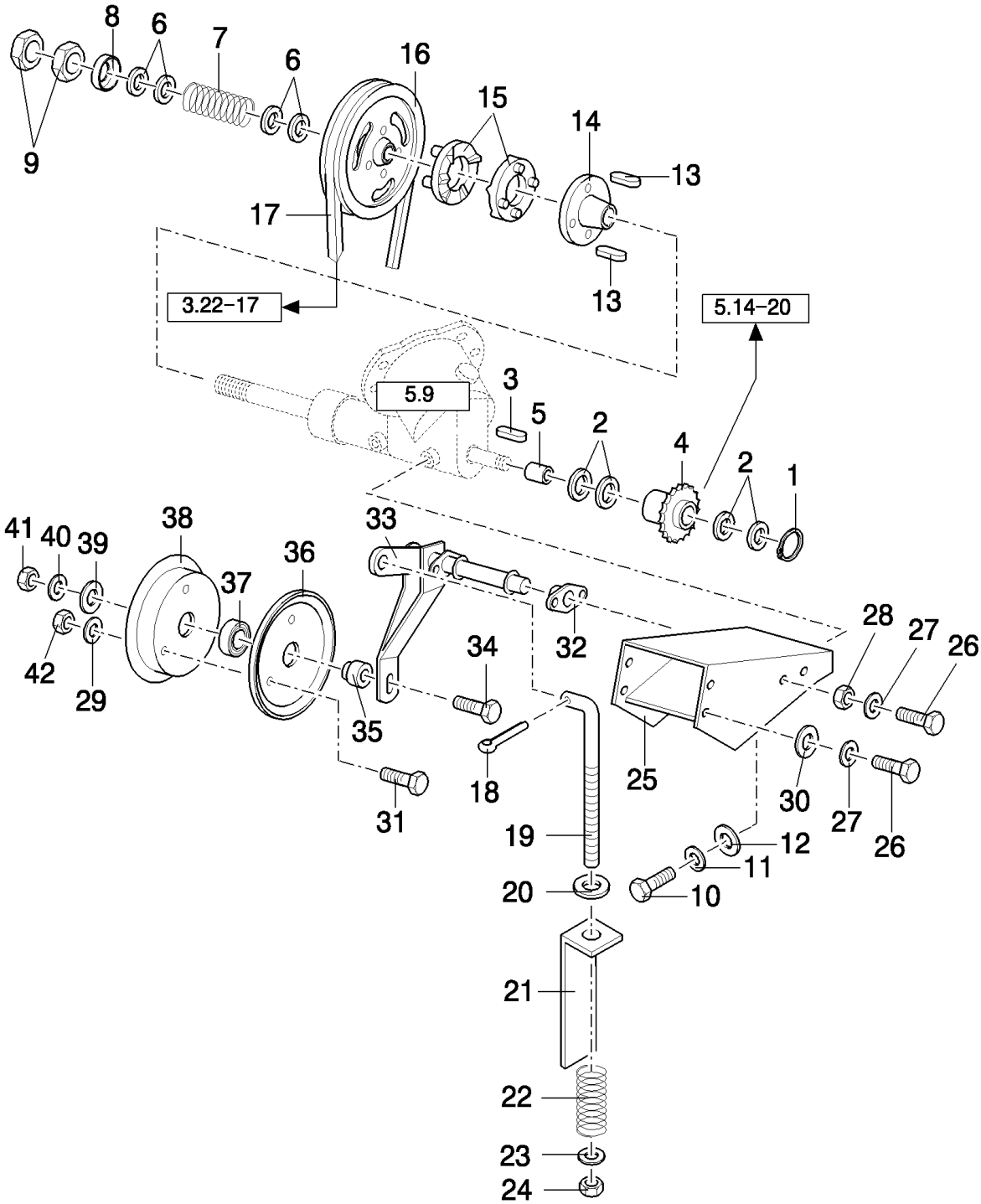

TX68 COMBINE - BASE UNIT

05.10(01) GEARBOX DRIVE "BUBBLE-UP"

ссылка	Номер детали	Кол-во	Описание
1	370002	2	RING, SNAP, M25, Ext,
2	444976	8	WASHER,
3	170010	1	KEY,
4	84004636	1	SPROCKET, DRIVEN,
5	9506696	1	BUSHING, , FOR TX66-68 ONLY
5	338206	1	WASHER, , FOR TX62-63-64-65 ONLY
6	356526	4	WASHER,
7	333506	1	SPRING,
8	397340	1	COVER,
9	100024	1	NUT, M24 x 1.5, Cl 8,
10	43140	2	BOLT, Hex, M10 x 30, 8.8, Full Thd,
11	140045	2	WASHER, SPRING, Belleville, M10,
12	378244	2	WASHER, M10,
13	170008	2	KEY,
14	387759	1	HUB,
15	394363	2	CLUTCH,
16	428435	1	PULLEY,
17	84015852	1	BELT, TRANSMISSION,
18	130003	1	PIN, SPLIT (COTTER), M3.2 x 20,
19	422800	1	ROD, ADJUSTMENT,
20	439857	1	BUSHING,
21	422542	1	GAUGE, , -C4420
21	80747259	1	INDICATOR, , D4420-
22	322297	1	SPRING,
23	378245	2	WASHER, M12,
24	412126	1	NUT, LOCK, M12 x 1.75, Cl 8,
25	84000116	1	SUPPORT, , FOR TX66-67-68 ONLY
25	84007946	1	SUPPORT, , FOR TX62-63-64-65 ONLY
27	322358	8	WASHER, SPRING, Belleville, M8,
28	9706690	8	NUT, M8, Cl 8,
29	322357	3	WASHER, SPRING, Belleville, M6,
30	140041	4	WASHER, M8 x 28 x 3,
31	80120099	3	BOLT, Hex, M6 x 16, 8.8,
32	338712	1	FLANGE,
33	84005249	1	ARM,
34	120093	1	BOLT, Hex, M16 x 80, 8.8,
35	200072	1	BUSHING,
36	290119	1	HALF-PULLEY, , WITH VARIABLE BEATER DRIVE ONLY
36	330737	1	HALF-PULLEY, , WITH CONSTANT BEATER DRIVE ONLY
37	443898	1	BEARING, BALL,
38	290122	1	HALF-PULLEY,
39	140020	1	WASHER, M16 x 30 x 3,
40	140048	1	WASHER, SPRING, Belleville, M16,
41	100020	1	NUT, M16, Cl 8,

TX68 COMBINE - BASE UNIT

05.10(01) GEARBOX DRIVE "BUBBLE-UP"

ссылка	Номер детали	Кол-во	Описание
42	15896221	3	NUT, M6, Cl 10,
26	16043224	2	BOLT, Hex, M8 x 16, 8.8, Full Thd,

05.11(01) "BUBBLE-UP" TUBE

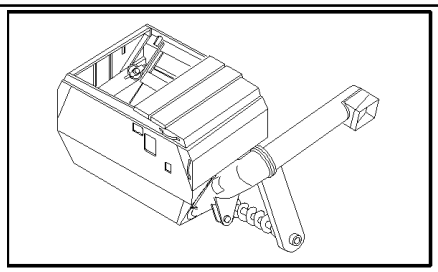

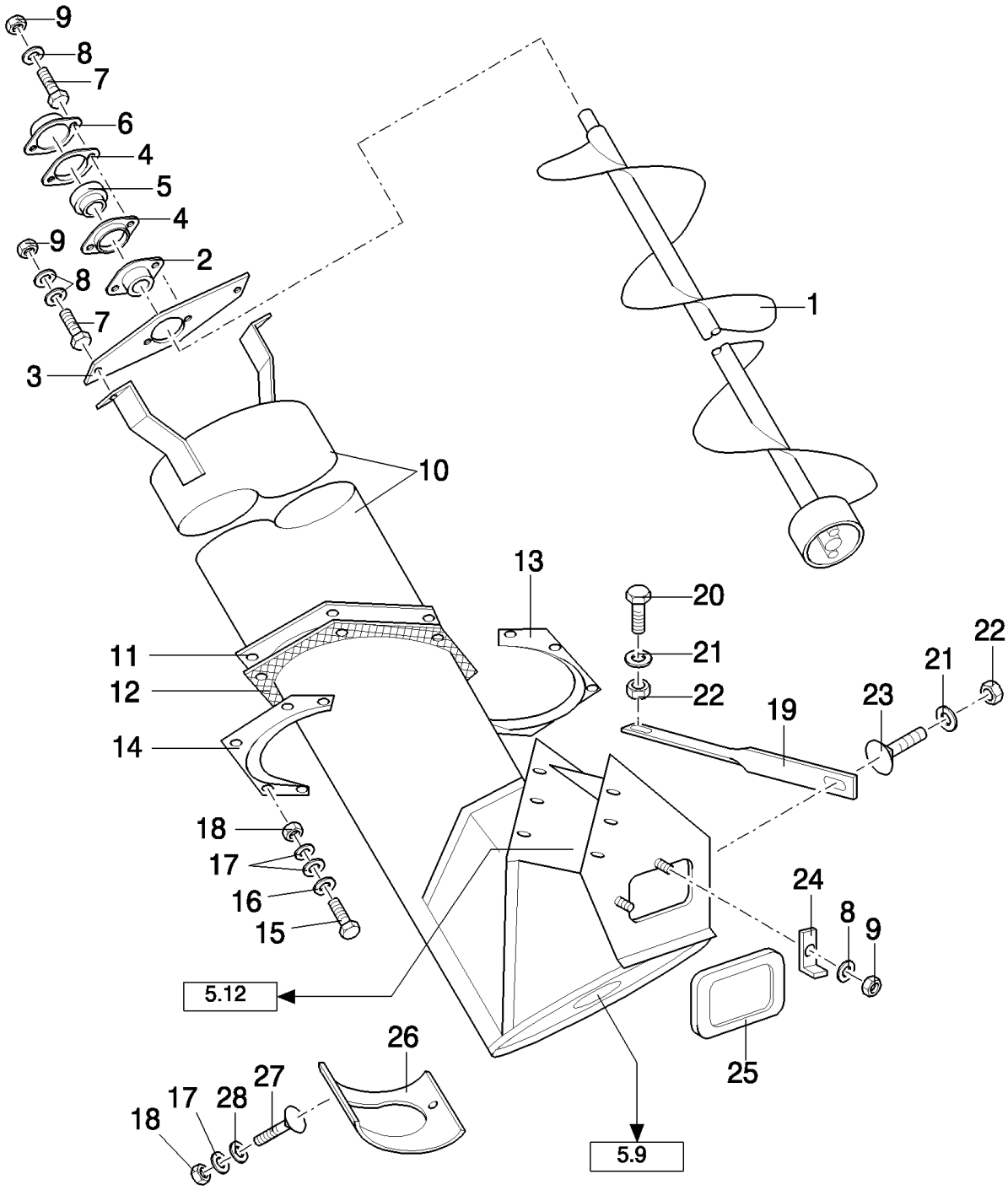

TX68 COMBINE - BASE UNIT

05.11(01) "BUBBLE-UP" TUBE

ссылка	Номер детали	Кол-во	Описание
1	9819471	1	AUGER, , STANDARD, FOR TX66-67-68 ONLY
1	9811003	1	AUGER, , FOR TX62-63-64-65 ONLY, STANDARD
1	9831386	1	AUGER, , FOR TX66-67-68 ONLY, REINFORCED
1	9831385	1	AUGER, , REINFORCED, FOR TX62-63-64-65 ONLY
2	751044	1	COVER,
3	9819820	1	BRACKET,
4	56128	2	FLANGE,
5	325103	1	BEARING, BALL,
6	750092	1	COVER,
7	120104	2	SCREW, Hex, M8 x 20, 8.8,
8	322358	4	WASHER, SPRING, Belleville, M8,
9	9706690	4	NUT, M8, Cl 8,
10	9839304	1	ELEVATOR, , FOR TX66-67-68 ONLY
10	9839302	1	ELEVATOR, , FOR TX62-63-64-65 ONLY
11	429785	1	PLATE,
12	434153	1	ELEMENT, SEALING,
13	446066	1	CLAMP,
14	446067	1	CLAMP,
15	120100	7	BOLT, Hex, M6 x 20, 8.8,
16	140040	14	WASHER, M6 x 22 x 2,
17	322357	9	WASHER, SPRING, Belleville, M6,
18	15896221	9	NUT, M6, Cl 10,
19	9812234	1	SUPPORT,
20	43140	1	BOLT, Hex, M10 x 30, 8.8, Full Thd,
21	140045	2	WASHER, SPRING, Belleville, M10,
22	100016	2	NUT, M10, Cl 8,
23	V43471	1	BOLT, M10x20
24	425093	2	CLIP,
25	916303	1	COVER,
26	434152	1	COVER,
27	86512439	2	SCREW, Short NK, M6 x 16, Cl8.8, Full Thd,
28	337411	2	WASHER, 6.6MM

05.12(01) GRAIN ELEVATOR

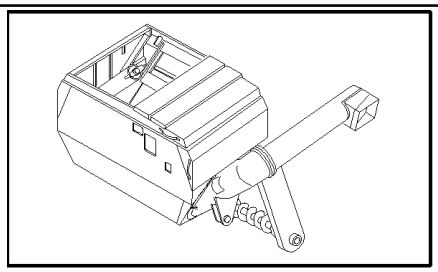

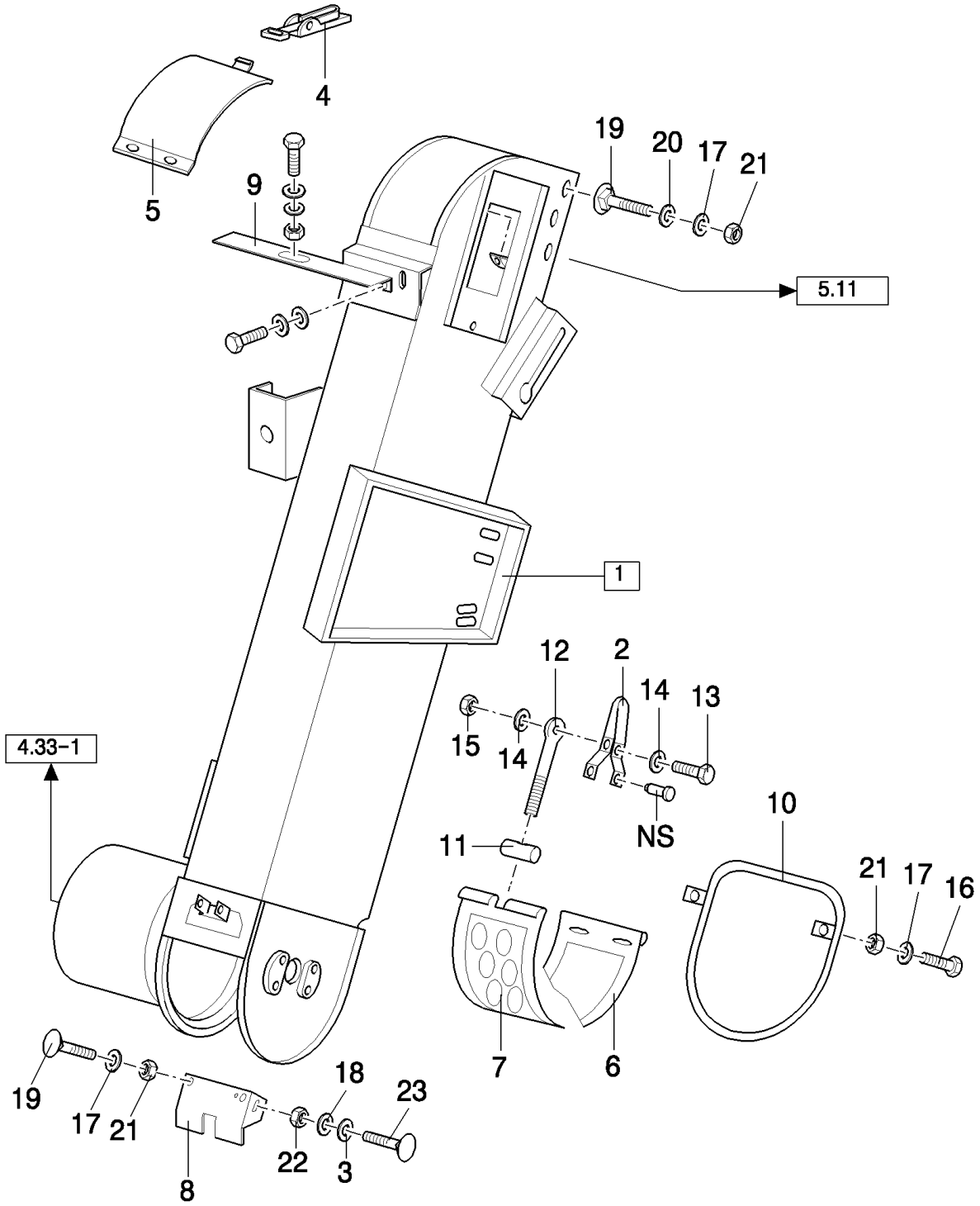

TX68 COMBINE - BASE UNIT

05.12(01) GRAIN ELEVATOR

ссылка	Номер детали	Кол-во	Описание
1	9819788	1	ELEVATOR, (2 to 4), STANDARD, -C4450
1	84017212	1	HOUSING, GRAIN ELEVATOR, (2 to 4), STANDARD, D4450-
1	89831314	1	HOUSING, GRAIN ELEVATOR, (2 to 4), REINFORCED, -C4450
1	84017213	1	HOUSING, GRAIN ELEVATOR, (2 to 4), REINFORCED, D4450-
2	321793	1	COVER,
3	140040	2	WASHER, M6 x 22 x 2,
4	9513188	1	FASTENER,
5	9833211	1	COVER, , STANDARD
5	9839420	1	COVER, , REINFORCED
6	9850477	1	COVER, , STANDARD
6	89850848	1	COVER, , REINFORCED
7	9850822	1	COVER, , -C1241
7	84814325	1	COVER, , D1242-
8	748549	1	PROTECTION CAP, , STANDARD, -C4450
8	84015917	1	CAP, FLANGE COVER, , STANDARD, D4450-
8	9831344	1	PROTECTION CAP, , REINFORCED, -C4450
8	84015919	1	CAP, FLANGE COVER, , REINFORCED, D4450-
9	451529	1	SUPPORT, , -C4450
9	84015952	1	SUPPORT, , D4450-
10	392523	1	SHIELD, , FOR GERMANY ONLY, -C1241
10	85006516	1	SHIELD, , FOR GERMANY ONLY, D1242-
11	9811398	1	ROD,
12	9811378	1	U-BOLT,
13	43128	1	BOLT, Hex, M8 x 30, 8.8,
14	378243	2	WASHER, M8,
15	86629542	1	NUT, LOCK, M8 x 1.25, Cl 8,
16	120104	3	SCREW, Hex, M8 x 20, 8.8,
17	322358	AR	WASHER, SPRING, Belleville, M8,
17	412649	AR	WASHER, SPRING, Belleville, M6,
18	322357	2	WASHER, SPRING, Belleville, M6,
19	86507486	AR	BOLT, CARRIAGE, Short NK, M8 x 20, Cl8.8, Full Thd,
19	300497	AR	SCREW, Hex Soc Flat Hd, M6 x 16, 8.8, M6x16
20	356903	6	WASHER, 9MM
21	9706690	AR	NUT, M8, Cl 8,
21	15896221	AR	NUT, M6, Cl 10,
22	15896221	2	NUT, M6, Cl 10,
23	9706703	2	BOLT, CARRIAGE, Short NK, M6 x 20, Cl8.8, Full Thd,

05.14(01) GRAIN ELEVATOR : DRIVE

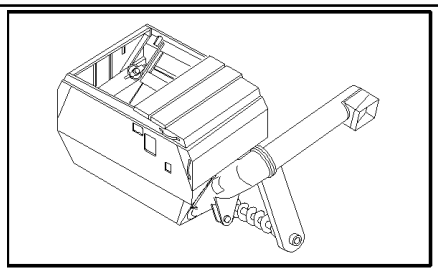

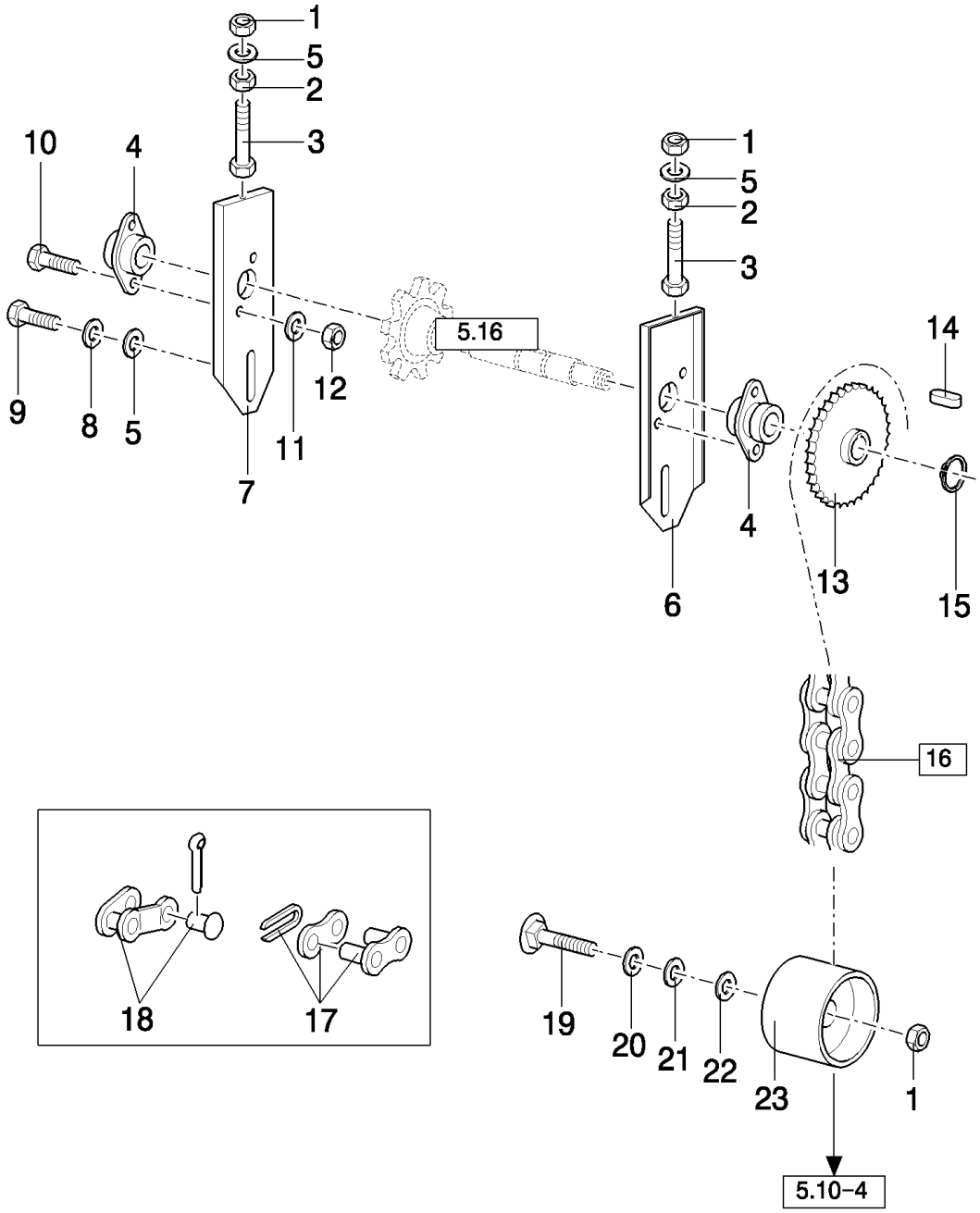

TX68 COMBINE - BASE UNIT

05.14(01) GRAIN ELEVATOR : DRIVE

ссылка	Номер детали	Кол-во	Описание
1	412126	2	NUT, LOCK, M12 x 1.75, Cl 8,
2	337475	2	NUT, M12, Cl 10,
3	120124	2	BOLT, Hex, M12 x 90, 8.8,
4	9513250	2	FLANGE,
5	378245	4	WASHER, M12,
6	9510583	1	PLATE,
7	9510584	1	PLATE,
8	140046	2	WASHER, Belleville, M12,
9	300388	2	SCREW, Hex, M12 x 25, 8.8, M12x35
10	43128	4	BOLT, Hex, M8 x 30, 8.8,
11	322358	4	WASHER, SPRING, Belleville, M8,
12	9706690	4	NUT, M8, Cl 8,
13	9819821	1	SPROCKET,
14	170030	1	KEY, M8 x 7 x 32, Par,
15	370002	1	RING, SNAP, M25, Ext,
16	321797	1	CHAIN, (17,18)
17	165590	2	LINK, CONNECTING,
18	241-1716	2	
19	412097	1	BOLT, CARRIAGE, Short NK, M12 x 60, Cl8.8, , FOR TX66-67-68 ONLY
19	334682	1	BOLT, CARRIAGE, Short NK, M12 x 50, Cl8.8, Full Thd, , FOR TX62-63-64-65 ONLY
20	140020	1	WASHER, M16 x 30 x 3,
21	9511052	1	WASHER, M12 x 44 x 4, 12MM, FOR TX66-68 ONLY
22	378245	1	WASHER, M12,
23	451361	1	WHEEL, IDLER,

05.15(01) GRAIN BOTTOM AUGER

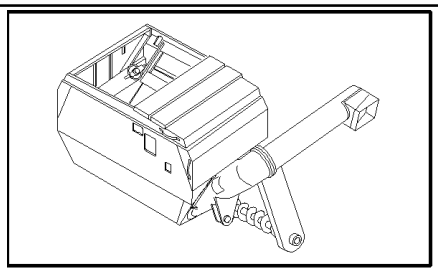

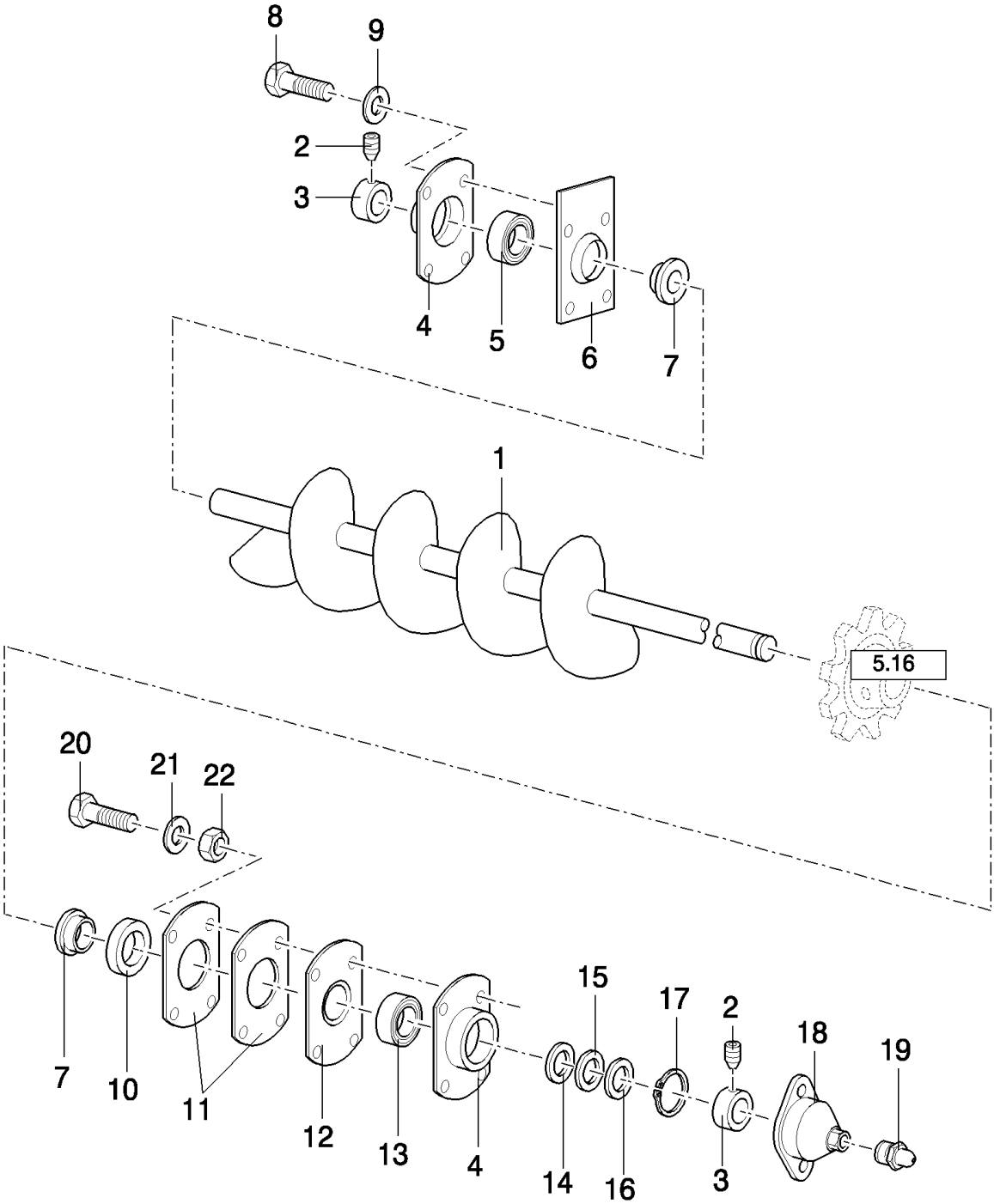

TX68 COMBINE - BASE UNIT

05.15(01) GRAIN BOTTOM AUGER

ссылка	Номер детали	Кол-во	Описание
1	84000347	1	AUGER, , FOR TX66-67-68 ONLY, STANDARD
1	84007948	1	AUGER, , STANDARD, FOR TX62-63-64-65 ONLY
1	84000644	1	AUGER, , FOR TX66-67-68 ONLY, REINFORCED
1	84007949	1	AUGER, , REINFORCED, FOR TX62-63-64-65 ONLY
2	300480	2	SET SCREW, Hex Soc, M10 x 12, Cup Pt,
3	300004	AR	RING,
4	9511041	2	FLANGE,
5	210043	1	BEARING, BALL,
6	433659	1	COVER,
7	310072	2	RING,
9	322358	4	WASHER, SPRING, Belleville, M8,
10	220062	1	ELEMENT, SEALING,
11	310085	2	FLANGE,
12	310056	1	COVER,
13	210033	1	BEARING, BALL,
14	140110	AR	WASHER,
15	140109	AR	WASHER,
16	140108	AR	WASHER,
17	370003	1	RING, SNAP, M30, Ext,
18	310067	1	COVER,
19	332038	1	NIPPLE, LUBE,
20	43127	4	BOLT, Hex, M8 x 25, 8.8,
21	140160	4	WASHER, LOCK, Int T, M8
22	9706690	4	NUT, M8, Cl 8,
8	16043224	4	BOLT, Hex, M8 x 16, 8.8, Full Thd,

05.16(01) GRAIN ELEVATOR CHAIN

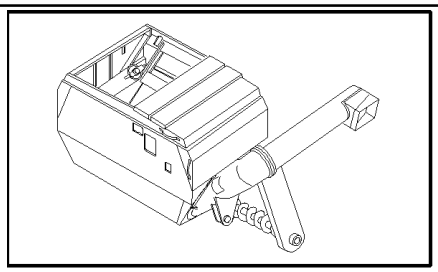

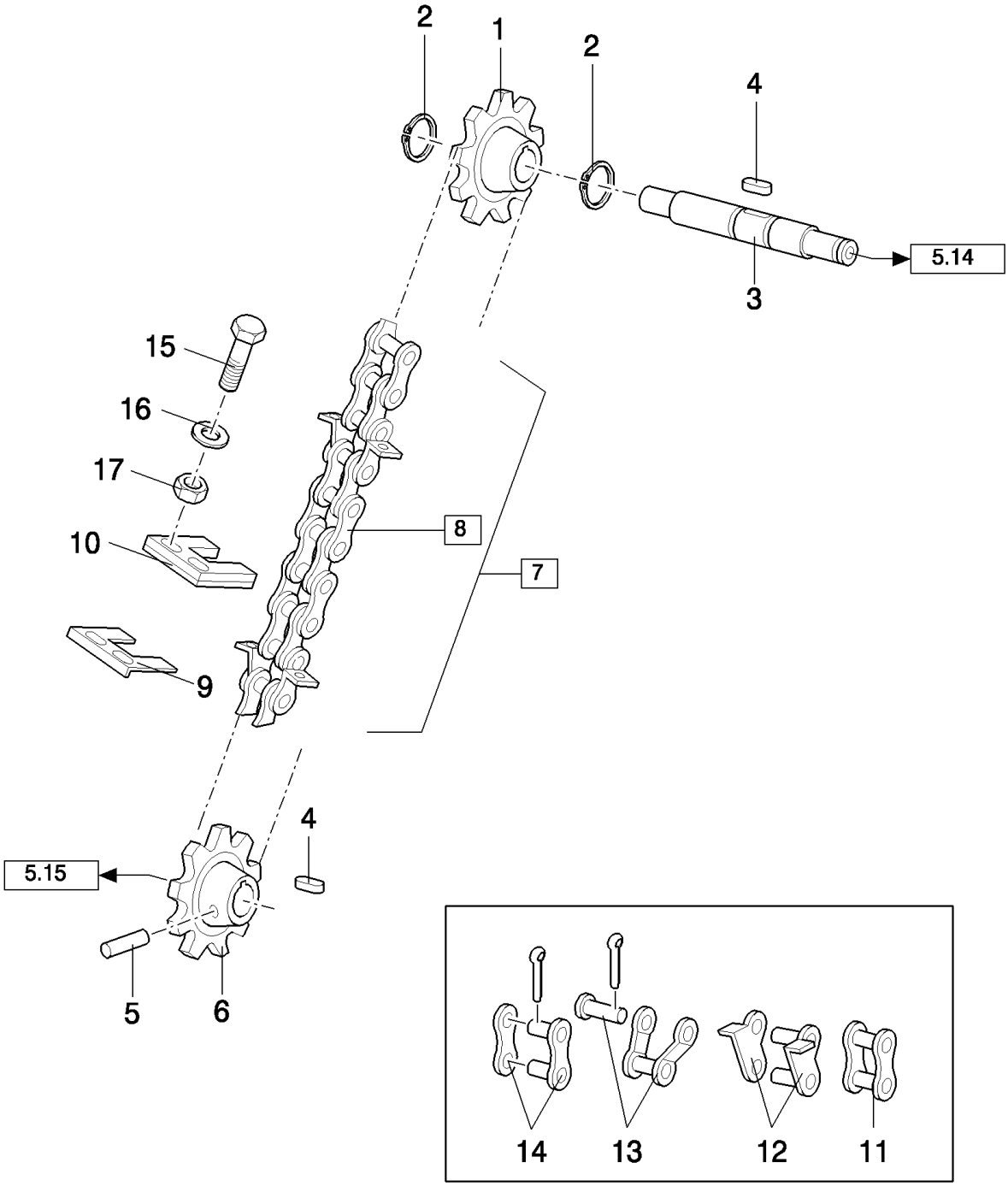

TX68 COMBINE - BASE UNIT

05.16(01) GRAIN ELEVATOR CHAIN

ссылка	Номер детали	Кол-во	Описание
1	417786	1	GEAR,
2	370003	2	RING, SNAP, M30, Ext,
3	9819822	1	SHAFT, , FOR TX66-67-68 ONLY
3	9831279	1	SHAFT, , FOR TX62-63-64-65 ONLY
4	170011	2	KEY,
5	412660	1	PIN, M6 x 45, Slotted,
6	417785	1	SPROCKET,
7	9837056	1	CHAIN, (8 to 10), FOR TX66-68 ONLY, -C4450
7	84015232	1	CHAIN, (8 to 10), FOR TX66-67-68 ONLY, D4450-
7	84017638	1	CHAIN, (8 to 10), FOR TX62-63-64-65 ONLY
8	84015227	1	CHAIN, (11 to 14)
9	84015241	26	PLATE, , FOR TX66-67-68 ONLY
9	84017656	26	PLATE, , FOR TX62-63-64-65 ONLY
10	9835453	26	FLIGHT, RUBBER, , FOR TX66-67-68 ONLY
10	84004821	26	BLADE, TILLAGE, , FOR TX62-63-64-65 ONLY
11	43278	52	LINK, CHAIN,
12	84017435	26	LINK, CONNECTING,
13	40242	2	LINK, OFFSET,
14	40241	26	LINK, CONNECTING,
15	86977786	2	BOLT, Hex, M6 x 25, 8.8,
16	140040	2	WASHER, M6 x 22 x 2,
17	353308	2	NUT, M6 x 1, Cl 8,

05.17(01) GRAINTANK

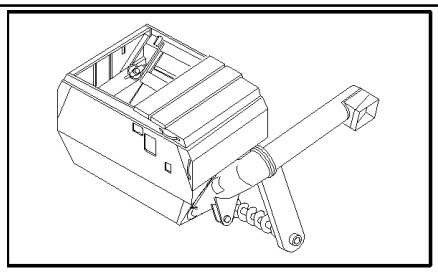

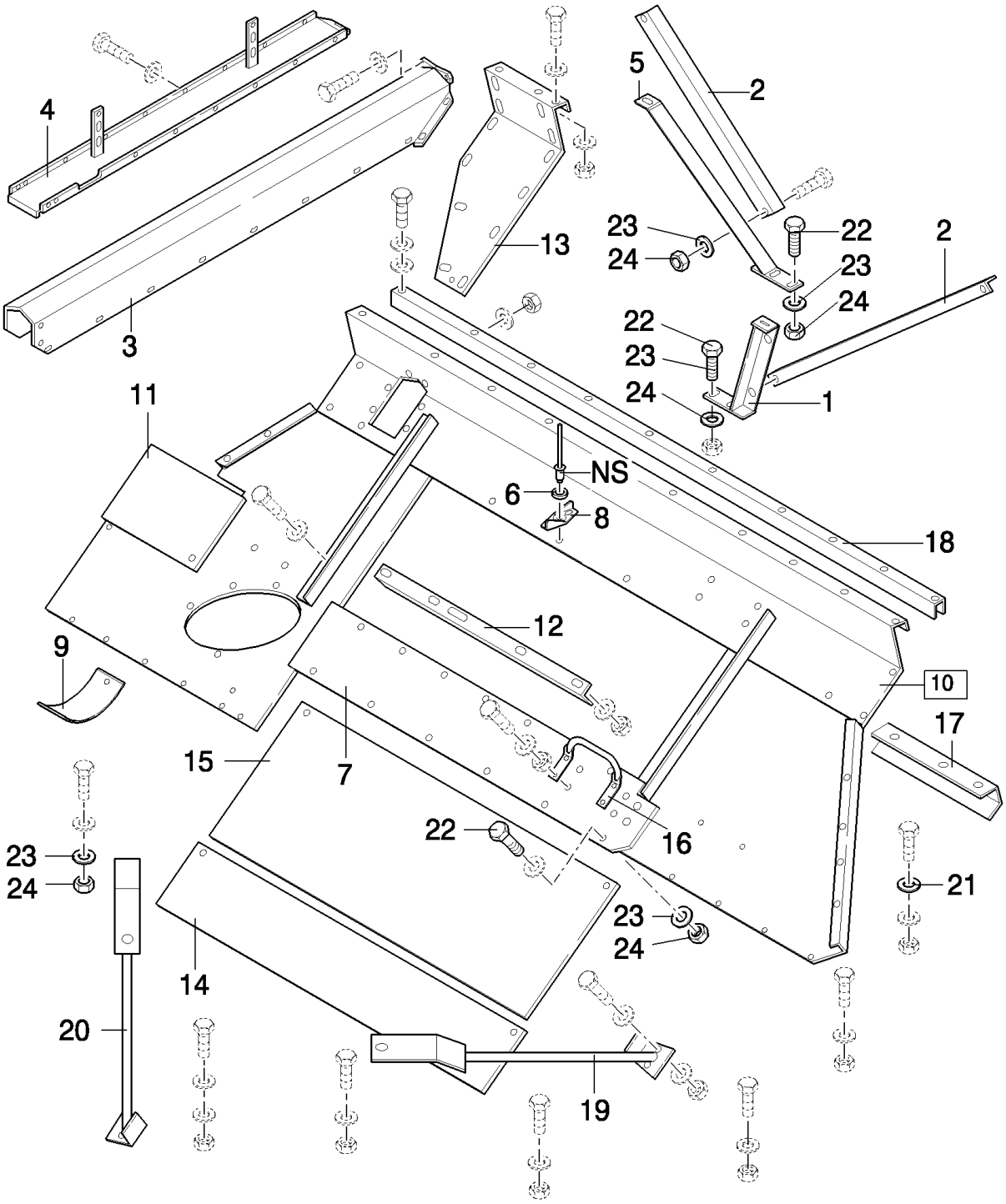

TX68 COMBINE - BASE UNIT

05.17(01) GRAINTANK

ссылка	Номер детали	Кол-во	Описание
1	80916326	1	SUPPORT,
2	80916325	2	ANGLE,
3	84001186	1	PLATE,
4	84001188	1	SUPPORT,
5	916327	1	SUPPORT,
6	362785	AR	WASHER,
7	84002648	1	PLATE, COVER,
8	362786	AR	FASTENER,
9	389718	1	COVER,
10	9594893	1	PLATE, BOTTOM (7), FOR TX66-68 ONLY
10	84002730	1	PLATE, BOTTOM (7), FOR TX67 ONLY
11	750470	1	COVER, , FOR TX66-68 ONLY
11	84036490	1	COVER, , FOR TX67 ONLY
12	453642	1	SUPPORT, , FOR TX66-68 ONLY
12	84036493	1	SUPPORT, , FOR TX67 ONLY
13	84035282	1	PLATE, COVER,
14	453554	1	COVER,
15	453553	1	COVER,
16	753798	2	BRACKET,
17	453619	1	SUPPORT, , -C7520
17	84041527	1	SUPPORT, , FOR TX66-68 ONLY, D7520-
17	84002764	1	SUPPORT, , FOR TX67 ONLY
18	84035285	1	REINFORCEMENT, , FOR TX66-68 ONLY
18	84002731	1	REINFORCEMENT, , FOR TX67 ONLY
19	9812348	1	SUPPORT, , FOR TX66-68 ONLY
20	9812352	1	SUPPORT, , FOR TX66-68 ONLY
21	333041	2	WASHER,
22	43140	6	BOLT, Hex, M10 x 30, 8.8, Full Thd,
23	140045	AR	WASHER, SPRING, Belleville, M10,
24	100016	AR	NUT, M10, Cl 8,

05.19(01) GRAINTANK

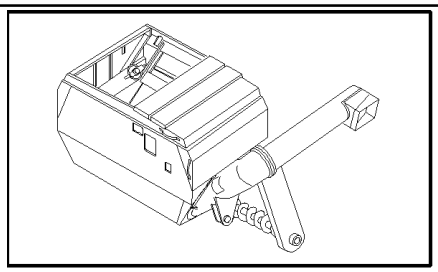

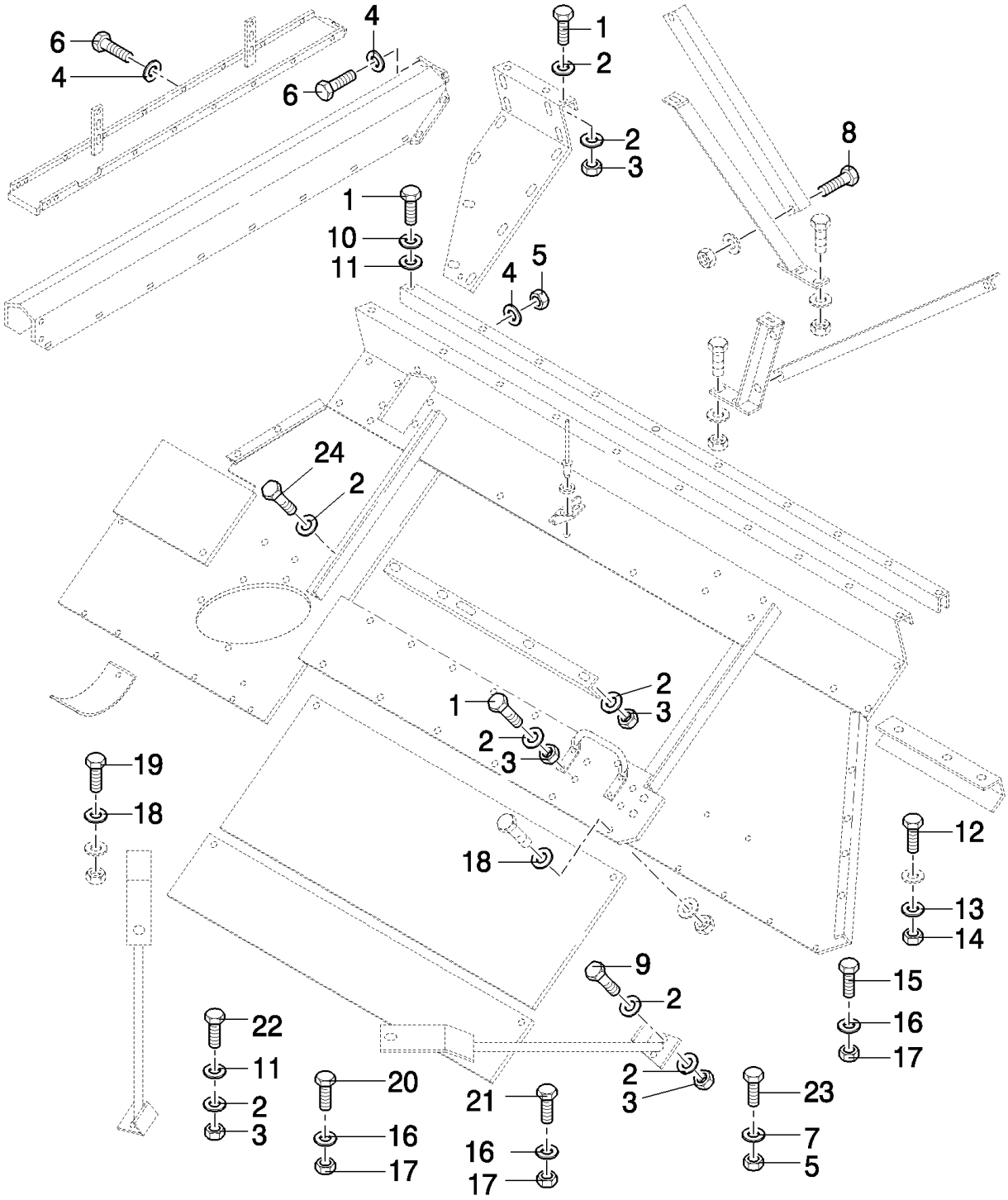

TX68 COMBINE - BASE UNIT

05.19(01) GRAINTANK

ссылка	Номер детали	Кол-во	Описание
1	120104	15	SCREW, Hex, M8 x 20, 8.8,
2	412650	25	WASHER, Belleville, M8,
3	9706690	15	NUT, M8, Cl 8,
4	412649	25	WASHER, SPRING, Belleville, M6,
5	15896221	10	NUT, M6, Cl 10,
6	80120099	25	BOLT, Hex, M6 x 16, 8.8,
7	322357	1	WASHER, SPRING, Belleville, M6,
8	43138	8	SCREW, Hex, M10 x 20, 8.8, Full Thd,
9	43128	4	BOLT, Hex, M8 x 30, 8.8,
10	322358	2	WASHER, SPRING, Belleville, M8,
11	140041	5	WASHER, M8 x 28 x 3,
12	120090	2	SCREW, Hex, M16 x 50, 8.8,
13	140048	2	WASHER, SPRING, Belleville, M16,
14	100020	2	NUT, M16, Cl 8,
15	9706687	4	SCREW, Hex, M12 x 30, 8.8,
16	140046	8	WASHER, Belleville, M12,
17	337475	8	NUT, M12, Cl 10,
18	140042	5	WASHER, M10 x 34 x 3,
19	120201	3	BOLT, Hex, M10 x 35, 8.8, Full Thd,
20	337563	3	BOLT, Hex, M12 x 40, 10.9, Full Thd,
21	120122	1	BOLT, Hex, M12 x 50, 8.8, Full Thd,
22	120106	1	BOLT, Hex, M8 x 40, 8.8, Full Thd,
23	120102	1	SCREW, Hex, M6 x 40, 8.8, Full Thd,
24	43127	1	BOLT, Hex, M8 x 25, 8.8,

05.20(01) GRAINTANK

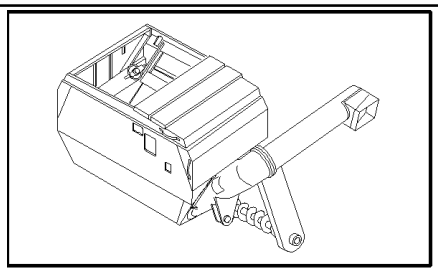

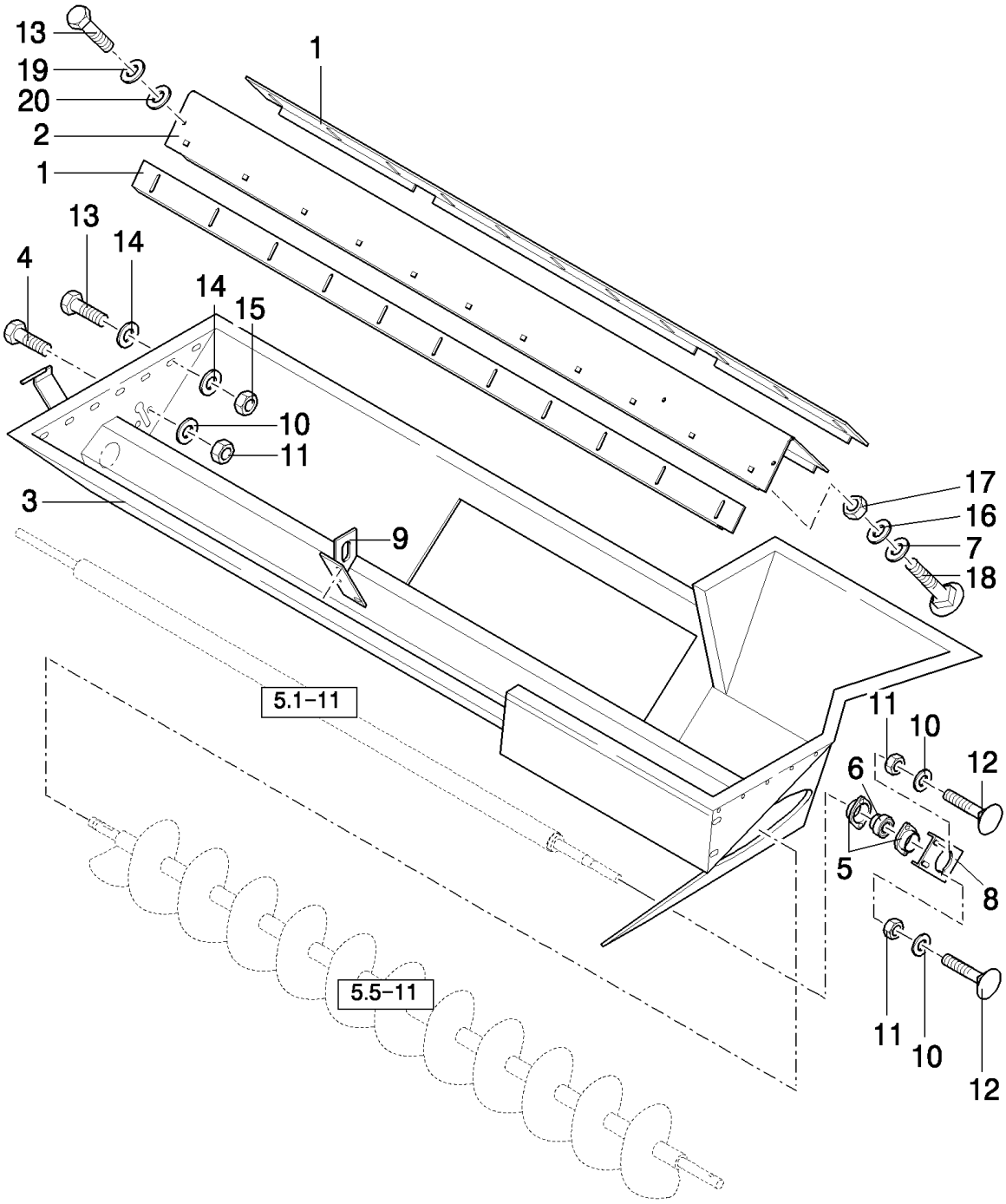

TX68 COMBINE - BASE UNIT

05.20(01) GRAINTANK

ссылка	Номер детали	Кол-во	Описание
1	452585	2	COVER, , FOR TX66-68 ONLY
1	429272	2	COVER, , FOR TX62-63-64-65 ONLY
1	84036506	2	COVER, , FOR TX67 ONLY
2	9513907	1	PLATE, COVER, , FOR TX66-68 ONLY, -C7520
2	84041531	1	PLATE, COVER, , FOR TX66-68 ONLY, D7520-
2	84036550	1	PLATE, COVER, , FOR TX67 ONLY
2	89835557	1	PLATE, COVER, , FOR TX62-63-64-65 ONLY
3	9594876	1	PLATE, COVER, , FOR TX66-68 ONLY
3	9594813	1	PLATE, , FOR TX62-63-64-65 ONLY
3	84002723	1	PLATE, COVER, , FOR TX67 ONLY
4	11106231	2	BOLT, Hex, M10 x 25, 10.9, Full Thd,
5	136978	2	FLANGE, , FOR TX66-67-68 ONLY
6	322360	1	BEARING, BALL, , FOR TX66-67-68 ONLY
7	378243	22	WASHER, M8,
8	84004090	1	PLATE, COVER, , FOR TX66-67-68 ONLY
9	9594875	1	SUPPORT,
10	140045	6	WASHER, SPRING, Belleville, M10,
11	100016	6	NUT, M10, Cl 8,
12	338949	4	BOLT, CARRIAGE, Short NK, M10 x 25, Cl8.8, Full Thd, , FOR TX66-68 ONLY
13	120104	15	SCREW, Hex, M8 x 20, 8.8,
14	412650	18	WASHER, Belleville, M8,
15	9706690	9	NUT, M8, Cl 8,
16	412649	22	WASHER, SPRING, Belleville, M6,
17	15896221	22	NUT, M6, Cl 10,
18	86512439	22	SCREW, Short NK, M6 x 16, Cl8.8, Full Thd,
19	322358	4	WASHER, SPRING, Belleville, M8,
20	140041	4	WASHER, M8 x 28 x 3,

05.21(01) GRAINTANK

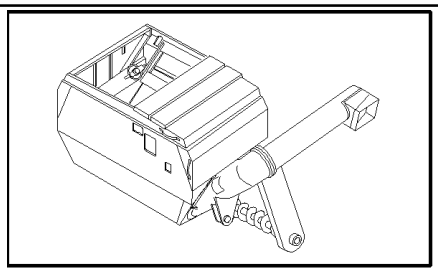

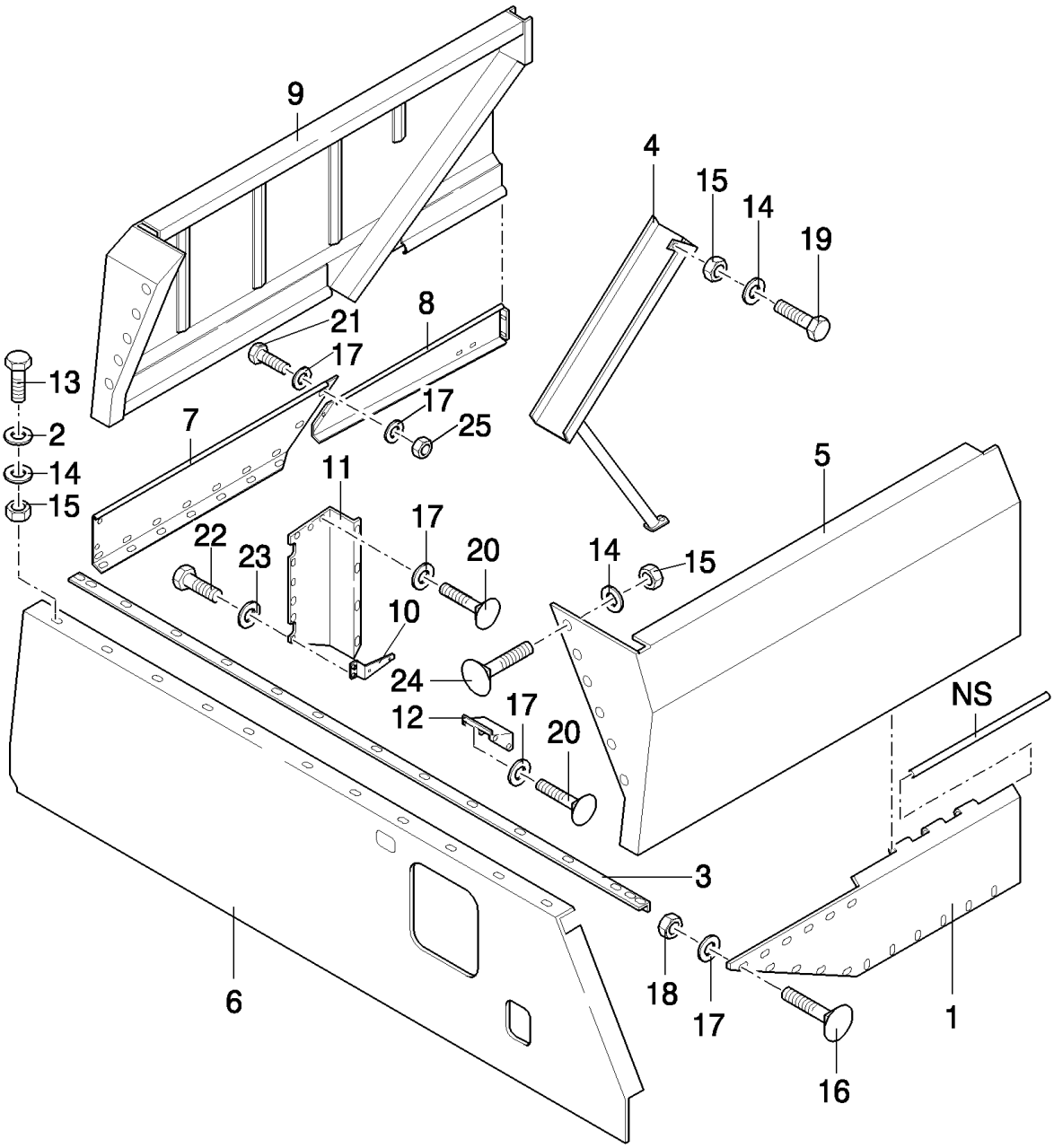

TX68 COMBINE - BASE UNIT

05.21(01) GRAINTANK

ссылка	Номер детали	Кол-во	Описание
1	9593595	1	COVER,
2	140041	11	WASHER, M8 x 28 x 3,
3	84001035	1	REINFORCEMENT, , FOR TX66-68 ONLY
3	89594904	1	REINFORCEMENT, , FOR TX62-63-64-65 ONLY
4	9812378	1	CHUTE, , FOR TX66-67-68 ONLY
4	89812373	1	GUIDE, , FOR TX62-63-64-65 ONLY
5	9594887	1	PANEL, SIDE, , -C1169
5	84989563	1	PANEL, SIDE, , D1170-
6	84001034	1	PLATE, , FOR TX66-68 ONLY, -C1169
6	84989572	1	PLATE, , FOR TX66-68 ONLY, D1170-
6	84002918	1	PLATE, , FOR TX67 ONLY, -C1169
6	84989615	1	PLATE, , FOR TX67 ONLY, D1170-
6	9594905	1	PLATE, , FOR TX62-63-64-65 ONLY, -C1169
6	84989621	1	PLATE, , FOR TX62-63-64-65 ONLY, D1170-
7	9594836	1	COVER,
8	84035289	1	PLATE, COVER,
9	84001043	1	PANEL, SIDE, , -C1169
9	84989683	1	PANEL, SIDE, , D1170-
10	84005676	2	SUPPORT,
11	84001213	1	PLATE,
12	9594917	1	PLATE, COVER,
13	120104	11	SCREW, Hex, M8 x 20, 8.8,
14	412650	24	WASHER, Belleville, M8,
15	9706690	24	NUT, M8, Cl 8,
16	9706703	6	BOLT, CARRIAGE, Short NK, M6 x 20, Cl8.8, Full Thd,
17	412649	12	WASHER, SPRING, Belleville, M6,
18	15896221	6	NUT, M6, Cl 10,
19	43128	1	BOLT, Hex, M8 x 30, 8.8,
20	86512439	7	SCREW, Short NK, M6 x 16, Cl8.8, Full Thd,
21	120101	1	BOLT, Hex, M6 x 30, 8.8, Full Thd,
22	120100	4	BOLT, Hex, M6 x 20, 8.8,
23	322357	4	WASHER, SPRING, Belleville, M6,
24	86507486	11	BOLT, CARRIAGE, Short NK, M8 x 20, Cl8.8, Full Thd,
25	353308	1	NUT, M6 x 1, Cl 8,

05.22(01) GRAINTANK

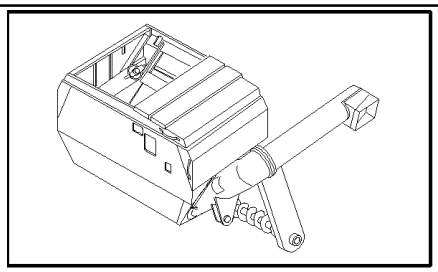

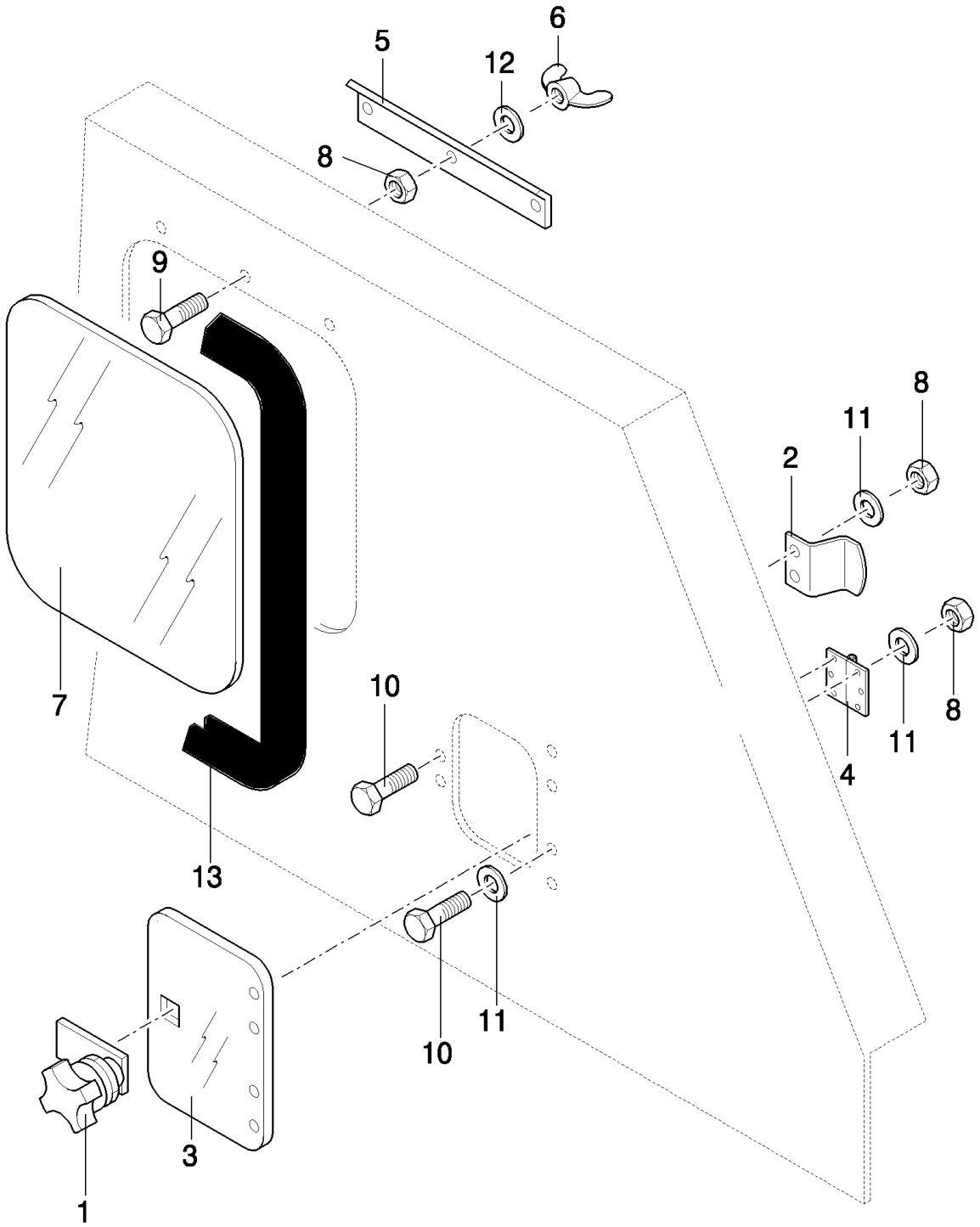

TX68 COMBINE - BASE UNIT

05.22(01) GRAINTANK

ссылка	Номер детали	Кол-во	Описание
1	425915	1	LOCK,
2	9514387	1	BRACKET,
3	9833979	1	GLASS, CAB,
4	9833212	2	HINGE,
5	9812263	1	BRACKET,
6	84814892	3	NUT, WING, M6 x 1,
7	9500277	1	GLASS, CAB,
8	15896221	13	NUT, M6, Cl 10,
9	120100	3	BOLT, Hex, M6 x 20, 8.8,
10	80120099	10	BOLT, Hex, M6 x 16, 8.8,
11	322357	14	WASHER, SPRING, Belleville, M6,
12	140040	3	WASHER, M6 x 22 x 2,
13	84053834	1	SEAL PROTECTION,

05.23(01) GRAINTANK COVER

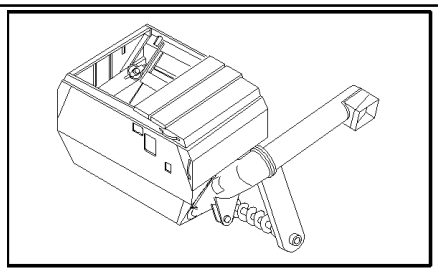

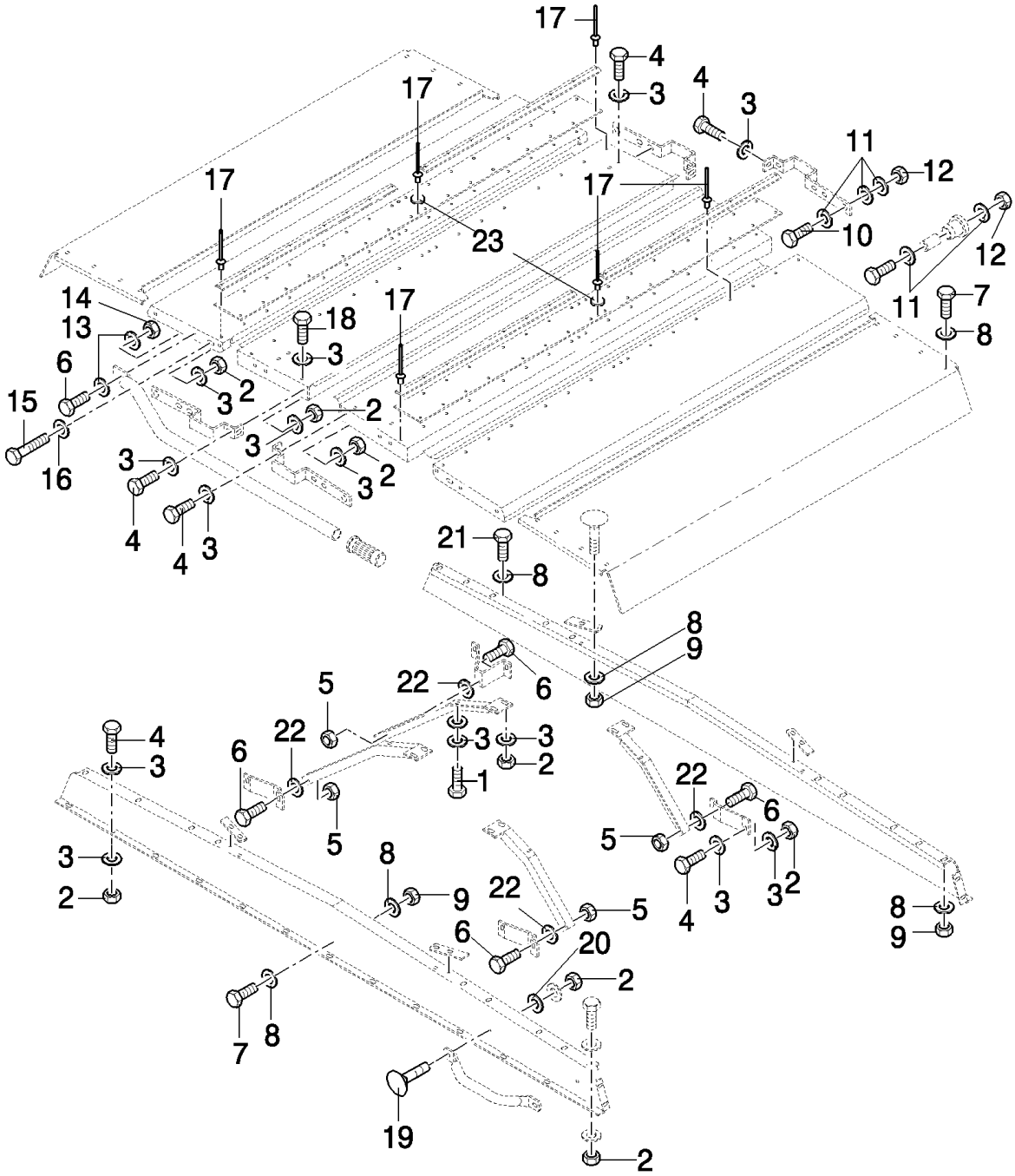

TX68 COMBINE - BASE UNIT

05.23(01) GRAINTANK COVER

ссылка	Номер детали	Кол-во	Описание
2	9706690	AR	NUT, M8, Cl 8,
3	412650	AR	WASHER, Belleville, M8,
4	120104	AR	SCREW, Hex, M8 x 20, 8.8,
5	100037	4	NUT, M10 x 1.5, Cl 8,
6	43140	AR	BOLT, Hex, M10 x 30, 8.8, Full Thd,
7	80120099	AR	BOLT, Hex, M6 x 16, 8.8,
8	412649	AR	WASHER, SPRING, Belleville, M6,
9	15896221	AR	NUT, M6, Cl 10,
10	9706687	4	SCREW, Hex, M12 x 30, 8.8,
11	378245	20	WASHER, M12,
12	100038	8	NUT, M12 x 1.75, Cl 8,
13	140045	AR	WASHER, SPRING, Belleville, M10,
14	100016	AR	NUT, M10, Cl 8,
15	43129	AR	BOLT, Hex, M8 x 40, 8.8,
16	333962	1	CLAMP,
17	445394	68	RIVET, Pop, M4.8 x 12.7,
18	43128	2	BOLT, Hex, M8 x 30, 8.8,
19	86507486	AR	BOLT, CARRIAGE, Short NK, M8 x 20, Cl8.8, Full Thd, , FOR TX64-65-66-68 ONLY
20	140041	AR	WASHER, M8 x 28 x 3, 6MM
21	120100	2	BOLT, Hex, M6 x 20, 8.8,
22	378244	4	WASHER, M10,
23	140182	4	WASHER, M5 x 18 x 2,
1	16043224	4	BOLT, Hex, M8 x 16, 8.8, Full Thd,

05.24(01) GRAINTANK COVER

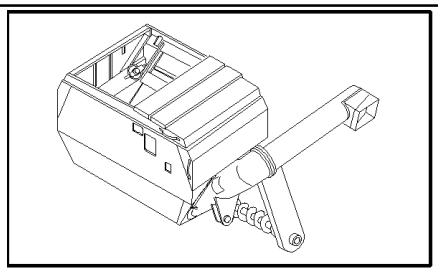

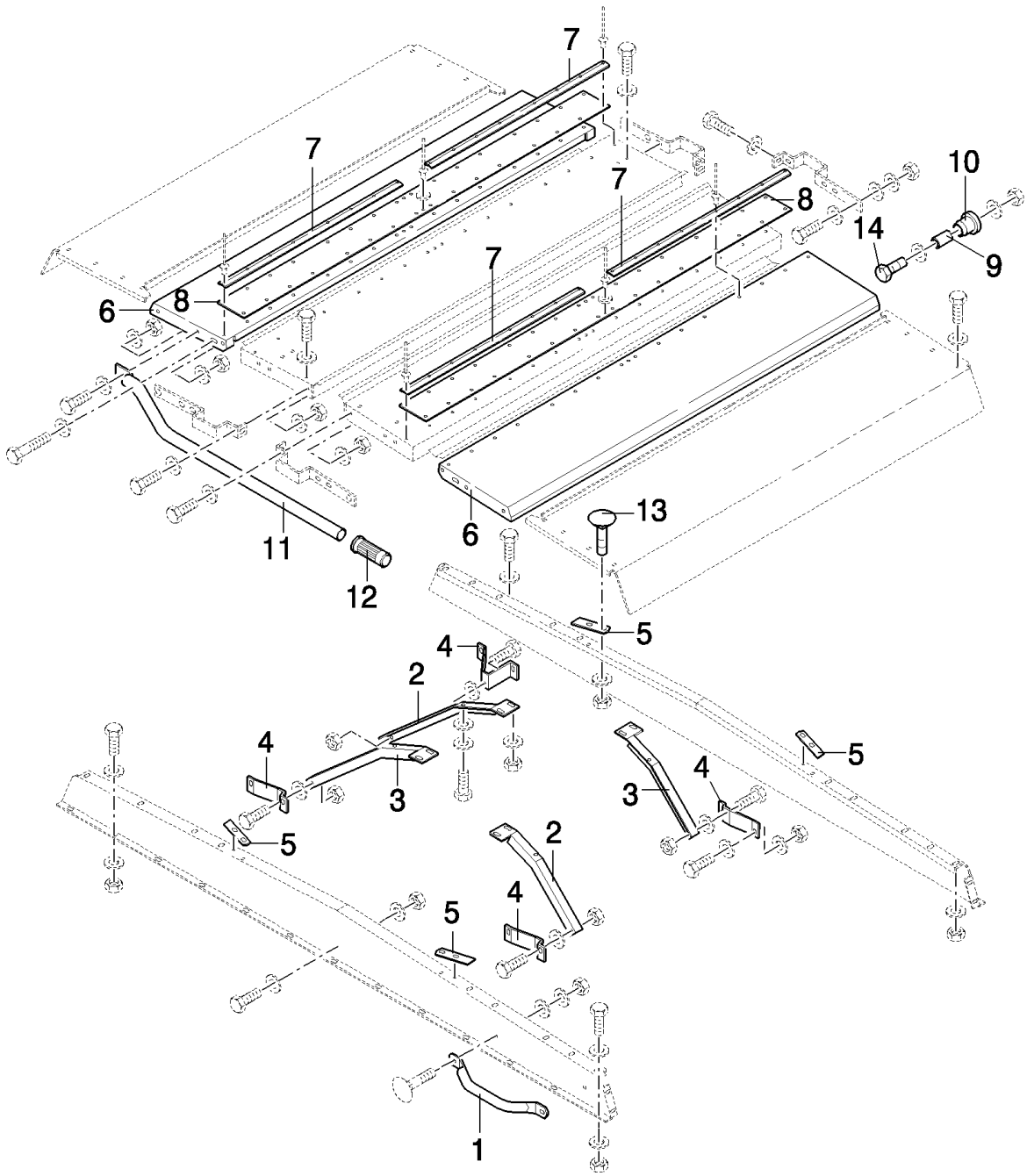

TX68 COMBINE - BASE UNIT

05.24(01) GRAINTANK COVER

ссылка	Номер детали	Кол-во	Описание
1	388476	1	HANDLE,
2	84001083	2	SUPPORT, , FOR TX63-64-65-66-67-68 ONLY
2	84001596	2	SUPPORT, , FOR TX62 ONLY, -C1032
2	84001083	2	SUPPORT, , FOR TX62 ONLY, D1033-
3	84001078	2	SUPPORT, , FOR TX63-64-65-66-67-68 ONLY
3	84001595	2	SUPPORT, , FOR TX62 ONLY, -C1032
3	84001078	2	SUPPORT, , FOR TX62 ONLY, D1033-
4	9812848	4	SUPPORT, , FOR TX62-63-64-65-66-68 ONLY
4	84002820	4	SUPPORT, , FOR TX67 ONLY
5	84001366	4	ELEMENT, SEALING,
6	84001160	2	COVER,
7	754103	8	PLATE, FIXING,
8	9812858	2	CANVAS,
9	436353	4	BUSHING,
10	424230	4	BUSHING,
11	89850769	1	TUBE,
12	9837774	1	HANDLE GRIP,
13	9706703	8	BOLT, CARRIAGE, Short NK, M6 x 20, Cl8.8, Full Thd,
14	9706693	4	BOLT, Hex, M12 x 60, 8.8,

TX68 COMBINE - BASE UNIT

05.25(01) GRAINTANK COVER

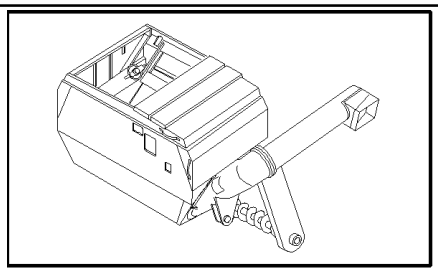

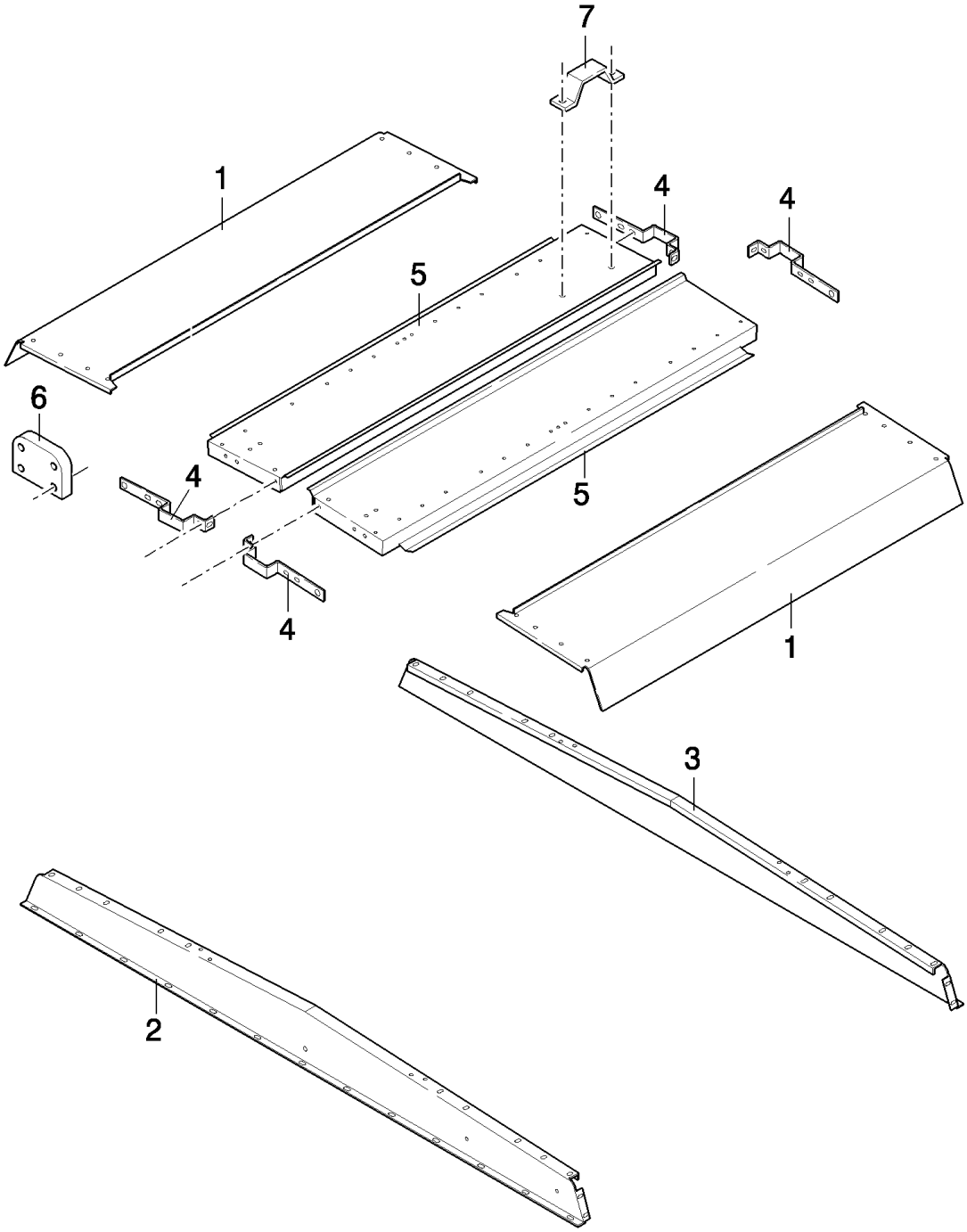

TX68 COMBINE - BASE UNIT

05.25(01) GRAINTANK COVER

ссылка	Номер детали	Кол-во	Описание
1	84001073	2	PANEL, SIDE, , FOR TX68 ONLY, -C1169
1	84431190	2	PANEL, SIDE, , FOR TX68 ONLY, D1170-
1	84002788	2	PANEL, SIDE, , FOR TX67 ONLY, -C1169
1	84431417	2	PANEL, SIDE, , FOR TX67 ONLY, D1170-
1	84001168	2	PANEL, SIDE, , FOR TX66 ONLY, -C1169
1	84431422	2	PANEL, SIDE, , FOR TX66 ONLY, D1170-
1	84001274	2	PANEL, SIDE, , FOR TX63-64 ONLY, -C1169
1	84431419	2	PANEL, SIDE, , FOR TX63-64 ONLY, D1170-
1	84001274	2	PANEL, SIDE, , FOR TX65 ONLY, -C1032
1	84035623	2	PANEL, SIDE, , FOR TX65 ONLY, -C0051
1	84431192	2	PANEL, SIDE, , FOR TX65 ONLY, D1170-
1	84001606	2	PANEL, SIDE, , FOR TX62 ONLY
2	84001164	1	PLATE, , FOR TX66 ONLY
2	84052368	1	PLATE, , FOR TX67 ONLY
2	84001082	1	PLATE, , FOR TX68 ONLY
2	84001271	1	PLATE, , FOR TX63-64 ONLY
2	84001271	1	PLATE, , FOR TX65 ONLY, -C1032
2	84035620	1	PLATE, , FOR TX65 ONLY, D1033-
2	84001594	1	PLATE, , FOR TX62 ONLY
3	84001163	1	PLATE, , FOR TX66 ONLY
3	84052370	1	PLATE, , FOR TX67 ONLY
3	84001081	1	PLATE, , FOR TX68 ONLY
3	84001272	1	PLATE, , FOR TX63-64 ONLY
3	84001272	1	PLATE, , FOR TX65 ONLY, -C1032
3	84035615	1	PLATE, , FOR TX65 ONLY, D1033-
3	84001586	1	PLATE, , FOR TX62 ONLY
4	84001079	4	BRACKET, , FOR TX66-68 ONLY
4	84001802	4	BRACKET, , FOR TX62-63-64-65-67 ONLY
5	84001161	2	COVER, , FOR TX66-68 ONLY, -C1169
5	84431193	2	COVER, , FOR TX66-68 ONLY, D1170-
5	84001270	2	COVER, , FOR TX62-63-64-65-67 ONLY, -C1169
5	84431195	2	COVER, , FOR TX62-63-64-65-67 ONLY, D1170-
6	84001604	1	SUPPORT, , FOR TX62 ONLY, -C1032
7	89837395	3	HANDLE, , FOR TX62-63-64-65-67 ONLY

05.26(01) ADDITIONAL AUGER IN GRAIN ELEVATOR

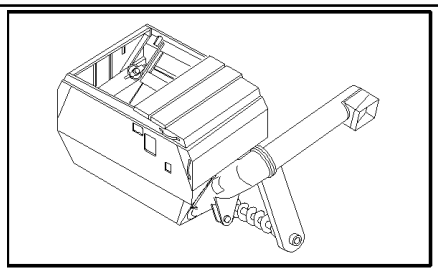

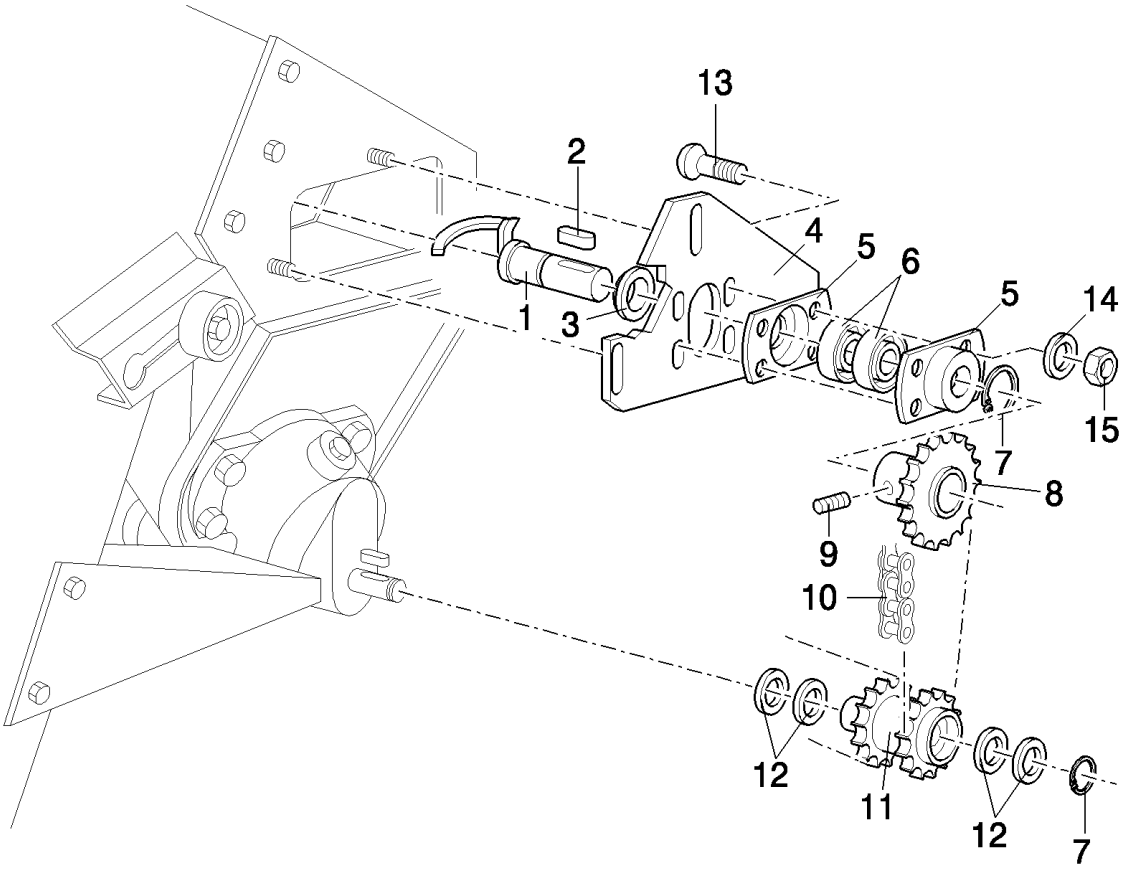

TX68 COMBINE - BASE UNIT

05.26(01) ADDITIONAL AUGER IN GRAIN ELEVATOR

ссылка	Номер детали	Кол-во	Описание
1	9812112	1	AUGER,
2	170030	1	KEY, M8 x 7 x 32, Par,
3	310072	1	RING,
4	9812108	1	PLATE,
5	310045	2	FLANGE,
6	443898	2	BEARING, BALL,
7	370002	1	RING, SNAP, M25, Ext,
8	423659	1	SPROCKET, DRIVEN,
9	300480	1	SET SCREW, Hex Soc, M10 x 12, Cup Pt,
10	116140	1	CHAIN,
11	9500703	1	SPROCKET,
12	338206	1	WASHER, 26MM
14	322358	5	WASHER, SPRING, Belleville, M8,
15	9706690	5	NUT, M8, Cl 8,
13	16043224	5	BOLT, Hex, M8 x 16, 8.8, Full Thd,

SECTIONS	**SECTIONS**	**SECCIONES**	**AFSNIT**
SEZIONI	**ABSCHNITTE**	**SECÇÕES**	**SECTIES**

SEC. 6

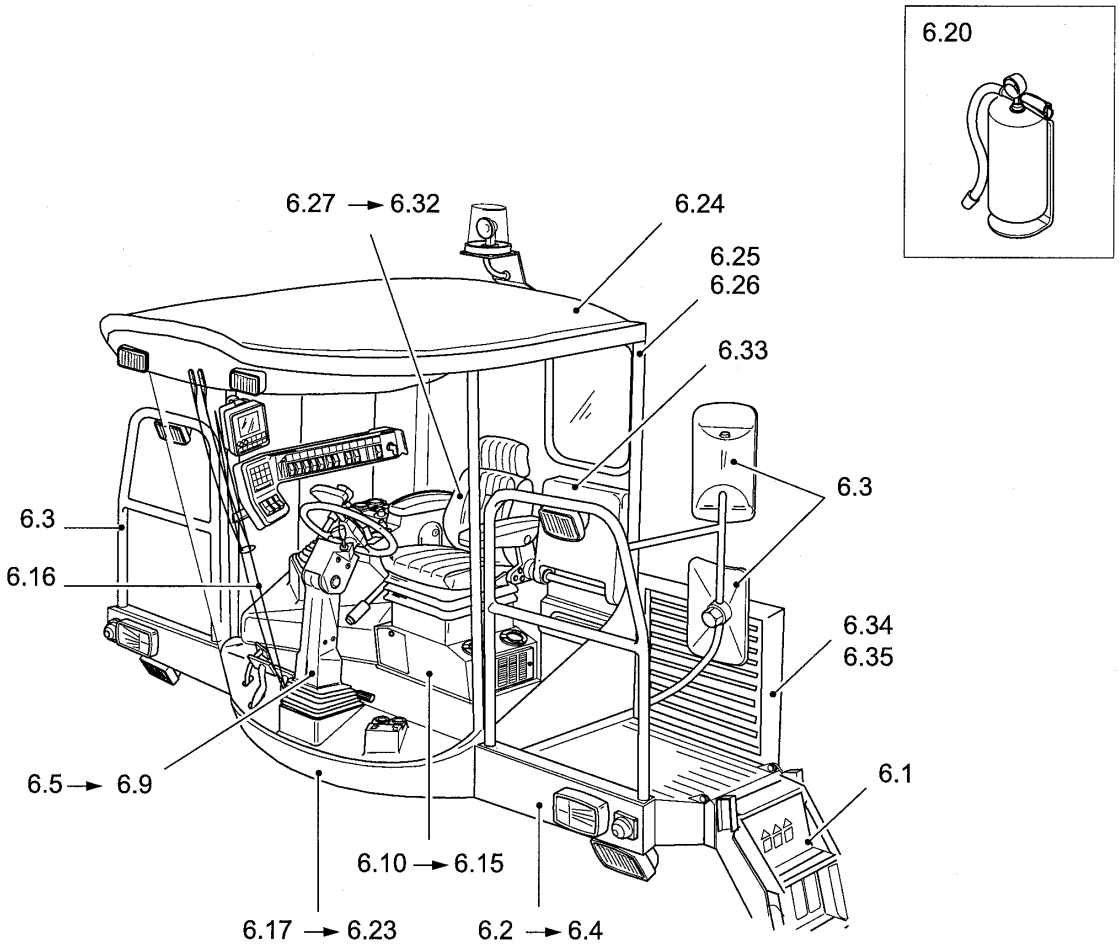

ссылка	Номер детали	Кол-во	Описание

06.01(01) OPERATOR'S PLATFORM LADDER

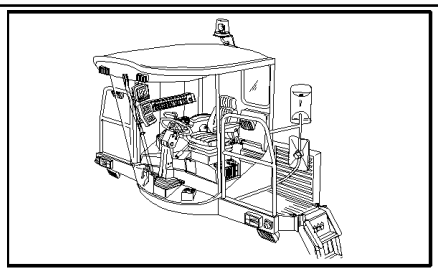

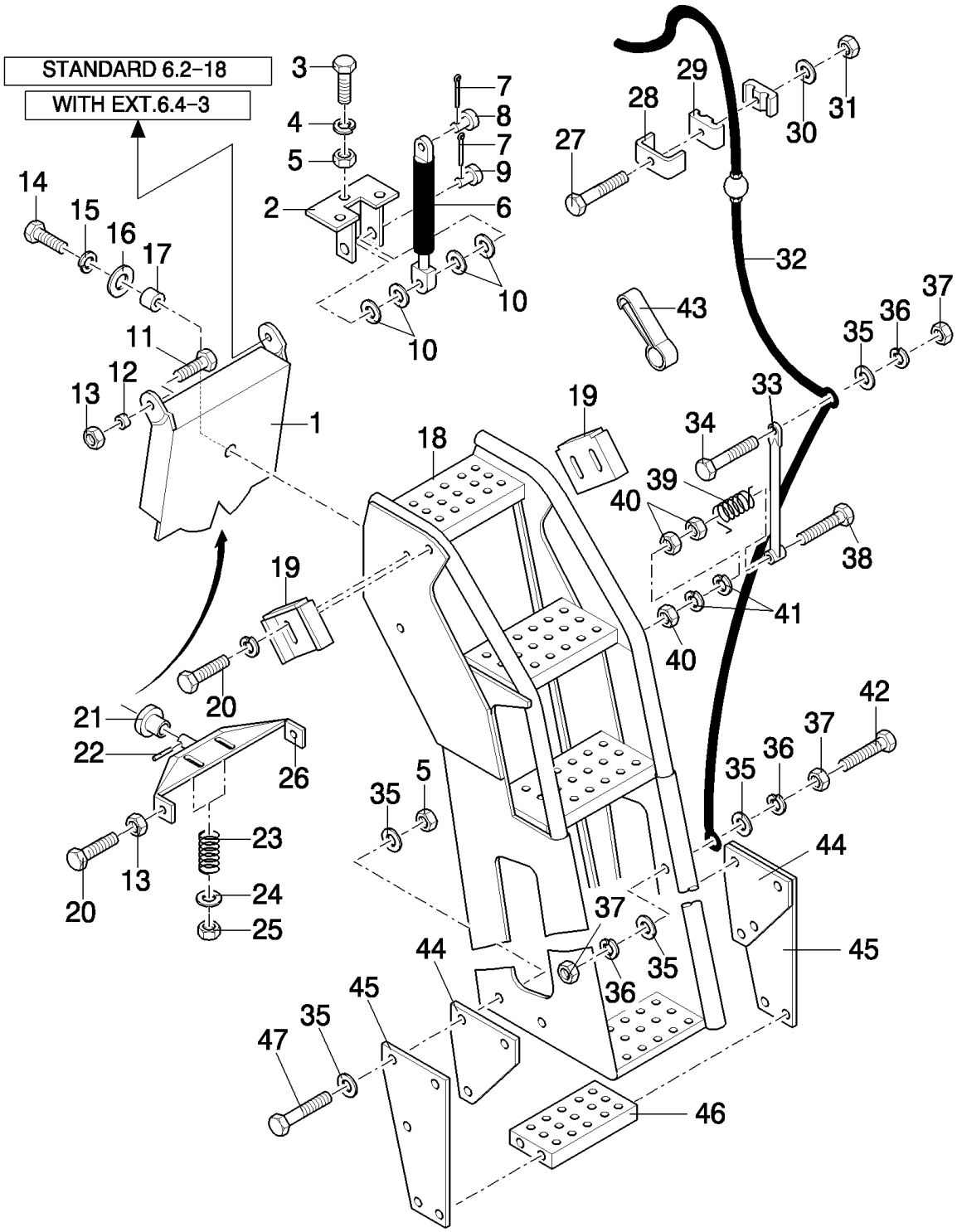

TX68 COMBINE - BASE UNIT

06.01(01) OPERATOR'S PLATFORM LADDER

ссылка	Номер детали	Кол-во	Описание
1	9814579	1	SUPPORT,
2	84011781	1	SUPPORT,
3	120112	3	BOLT, Hex, M10 x 40, 8.8, Full Thd,
4	140045	7	WASHER, SPRING, Belleville, M10,
5	100016	AR	NUT, M10, Cl 8,
6	89818978	1	SHOCK ABSORBER,
7	130003	2	PIN, SPLIT (COTTER), M3.2 x 20,
8	390040	1	PIN, CLEVIS, M10 x 35,
9	379547	1	PIN, CLEVIS, M10 x 60,
10	140079	4	WASHER,
11	43140	2	BOLT, Hex, M10 x 30, 8.8, Full Thd,
12	9838548	2	BUSHING,
13	100037	4	NUT, M10 x 1.5, Cl 8,
14	120090	1	SCREW, Hex, M16 x 50, 8.8,
15	140048	1	WASHER, SPRING, Belleville, M16,
16	748217	AR	PLATE, ADJUSTING,
17	458871	1	BUSHING,
18	84012248	1	LADDER,
19	9815149	2	SUPPORT,
20	43138	4	SCREW, Hex, M10 x 20, 8.8, Full Thd,
21	913654	1	BUSHING,
22	9510330	1	PIN, ROLL,
23	9509233	2	SPRING,
24	140042	2	WASHER, M10 x 34 x 3,
25	86514720	2	NUT, LOCK, M10
26	9814931	1	SUPPORT,
27	86977790	1	SCREW, Hex, M6 x 45, 8.8,
28	431941	1	SUPPORT,
29	430357	2	CLAMP,
30	140040	1	WASHER, M6 x 22 x 2,
31	412152	1	NUT, LOCK, M6 x 1, Cl 8.8,
32	84022066	1	ROPE, , BSN C479
32	87328127	1	ROPE, , ASN D480
33	84012251	1	LEVER,
34	43128	1	BOLT, Hex, M8 x 30, 8.8,
35	140041	AR	WASHER, M8 x 28 x 3,
36	322358	1	WASHER, SPRING, Belleville, M8,
37	9706690	1	NUT, M8, Cl 8,
38	120115	1	SCREW, Hex, M10 x 70, 8.8, Full Thd,
39	84014761	1	SPRING,
40	100016	3	NUT, M10, Cl 8,
41	140045	2	WASHER, SPRING, Belleville, M10,
42	300382	1	BOLT, Hex, M8 x 60, 8.8, Full Thd, M8x60
43	354957	1	HOOK,

ссылка	Номер детали	Кол-во	Описание
44	84035268	2	PLATE, COVER,
45	84035267	2	PLATE, COVER,
46	84045339	1	STEP,
47	412479	10	BOLT, Hex, M8 x 35, 8.8,

06.02(01) OPERATOR'S PLATFORM - LH

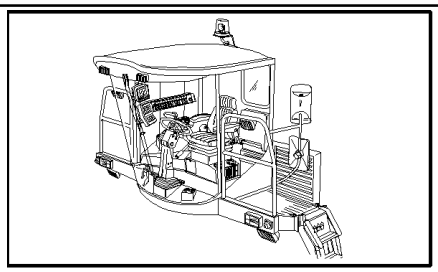

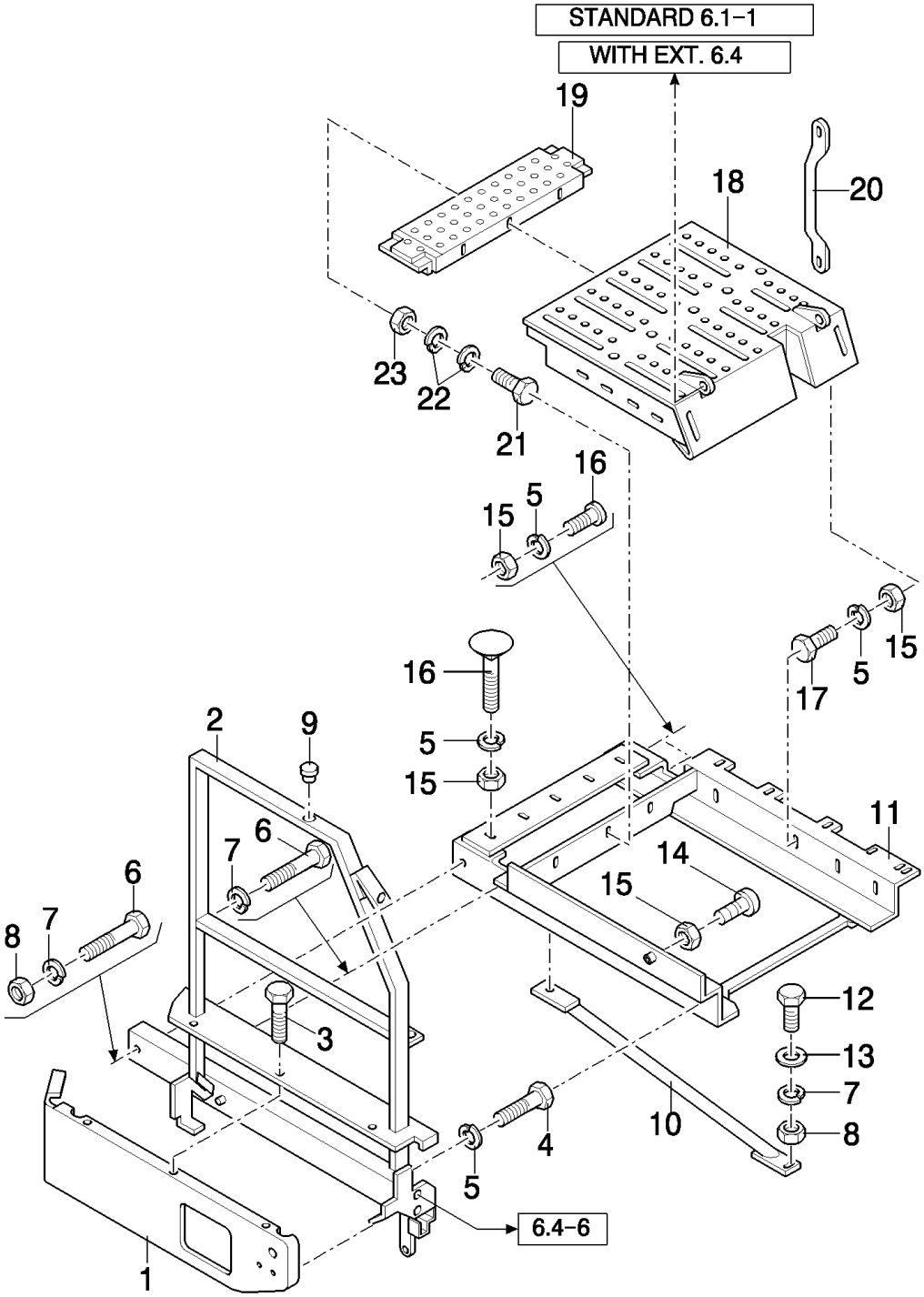

TX68 COMBINE - BASE UNIT

06.02(01) OPERATOR'S PLATFORM - LH

ссылка	Номер детали	Кол-во	Описание
1	84001021	1	PLATE, COVER, , FOR TX66-68 ONLY
1	84001381	1	PLATE, COVER, , FOR TX62-63-64-65-67 ONLY
2	9831224	1	HANDRAIL, , FOR TX66-68 ONLY, -C6405
2	84002328	1	HANDRAIL, , FOR TX66-68 ONLY, D6405-
2	89818338	1	HANDRAIL, , FOR TX62-64-65 ONLY, -C6405
2	84002335	1	HANDRAIL, , FOR TX62-63-64-65-67 ONLY, D6405-
3	N605772S36	5	SCREW,
4	120073	3	BOLT, Hex, M10 x 80, 8.8,
5	140045	3	WASHER, SPRING, Belleville, M10,
6	43158	4	BOLT, Hex, M12 x 80, 8.8,
7	140046	7	WASHER, Belleville, M12,
8	337475	7	NUT, M12, Cl 10,
9	433314	1	PLUG,
10	9832577	1	SUPPORT, , FOR TX62-63-64-65-66-68 ONLY
10	84035242	1	SUPPORT, , FOR TX67 ONLY
11	9814571	1	SUPPORT, , FOR TX66-68 ONLY
11	89831320	1	SUPPORT, , FOR TX62-63-64-65-67 ONLY
12	9706687	3	SCREW, Hex, M12 x 30, 8.8,
13	378245	3	WASHER, M12,
14	190029	1	INSULATOR BLOCK,
15	100016	1	NUT, M10, Cl 8,
16	V43471	5	BOLT, M10x20
17	43138	3	SCREW, Hex, M10 x 20, 8.8, Full Thd,
18	84012200	1	SUPPORT,
19	9831162	1	EXTENSION, , FOR TX66-68 ONLY
20	388476	1	HANDLE,
21	80120099	6	BOLT, Hex, M6 x 16, 8.8,
22	322357	6	WASHER, SPRING, Belleville, M6,
23	15896221	6	NUT, M6, Cl 10,

06.03(01) OPERATOR'S PLATFORM - RH

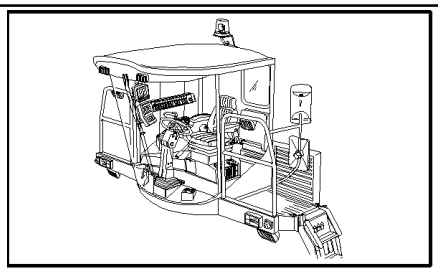

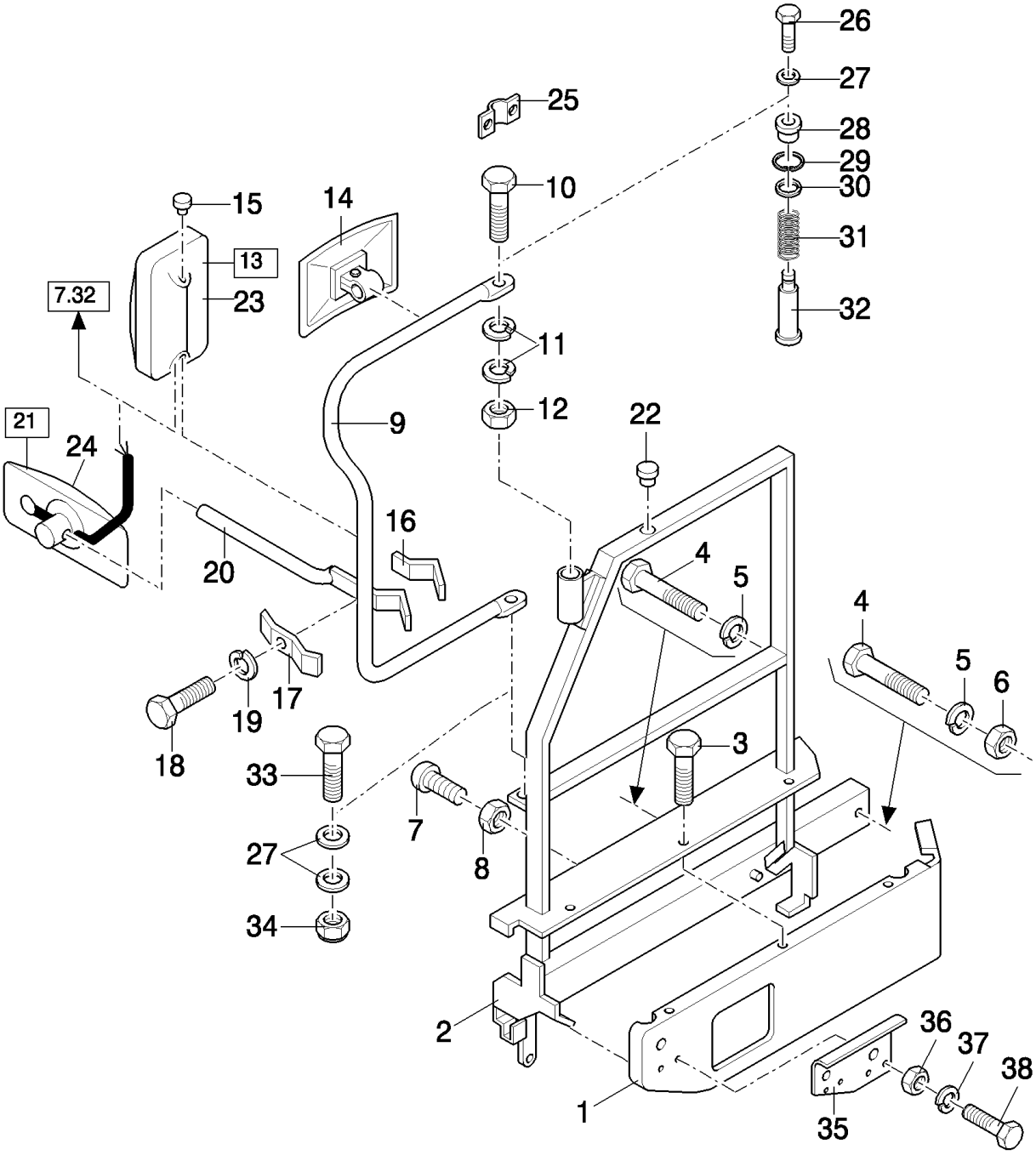

TX68 COMBINE - BASE UNIT

06.03(01) OPERATOR'S PLATFORM - RH

ссылка	Номер детали	Кол-во	Описание
1	84001022	1	PLATE, , FOR TX66-68 ONLY
1	84001237	1	PLATE, , FOR TX62-63-64-65 ONLY
1	84002859	1	PLATE, , FOR TX67 ONLY
2	9831226	1	HANDRAIL, , FOR TX66-68 ONLY, -C6405
2	84002333	1	HANDRAIL, , FOR TX66-68 ONLY, D6405-
2	89818337	1	HANDRAIL, , FOR TX62-64-65 ONLY, -C6405
2	84002337	1	HANDRAIL, , FOR TX62-63-64-65 ONLY, D6405-
2	84002861	1	HANDRAIL, , FOR TX67 ONLY
3	N605772S36	5	SCREW,
4	43158	2	BOLT, Hex, M12 x 80, 8.8,
5	140046	2	WASHER, Belleville, M12,
6	337475	1	NUT, M12, Cl 10,
7	190029	1	INSULATOR BLOCK,
8	100016	1	NUT, M10, Cl 8,
9	9818318	2	SUPPORT, , LH AND RH, -C6405
9	84002209	1	SUPPORT, LH, -C0032
9	84002209	1	SUPPORT, LH, FOR TX66-68 ONLY, D1033-
9	84035536	1	SUPPORT, LH, FOR TX62-63-64-65-67 ONLY, D1033-
9	84002210	1	SUPPORT, RH, D6405-
10	43140	4	BOLT, Hex, M10 x 30, 8.8, Full Thd, , LH AND RH
11	140045	8	WASHER, SPRING, Belleville, M10, , LH AND RH
12	100037	4	NUT, M10 x 1.5, Cl 8, , LH AND RH
13	9501005	2	MIRROR, REAR-VIEW, (23), LH AND RH
14	437650	2	MIRROR, REAR-VIEW, , LH AND RH, -C6405
14	84026680	2	MIRROR, REAR-VIEW, , LH AND RH, D6405-
15	610662	2	PLUG, , LH AND RH, -C6405
16	84007510	1	CLAMP, RH, FOR GERMANY ONLY
17	84007508	1	CLAMP, RH, FOR GERMANY ONLY
18	86977786	1	BOLT, Hex, M6 x 25, 8.8, RH, FOR GERMANY ONLY
19	322357	1	WASHER, SPRING, Belleville, M6, , FOR GERMANY ONLY
20	84007509	1	SUPPORT, RH, FOR GERMANY ONLY
21	84038307	1	MIRROR, REAR-VIEW, RH (24), FOR GERMANY ONLY
22	433314	1	PLUG,
23	84036577	1	COVER,
24	84036693	1	GLASS,
25	84037250	1	CLAMP,
27	322358	AR	WASHER, SPRING, Belleville, M8,
28	84002212	2	BUSHING,
29	456770	2	CIRCLIP,
30	419176	2	RING,
31	754891	2	SPRING,
32	84002211	2	PIN,
33	43128	2	BOLT, Hex, M8 x 30, 8.8,
34	86629542	2	NUT, LOCK, M8 x 1.25, Cl 8,

TX68 COMBINE - BASE UNIT

06.03(01) OPERATOR'S PLATFORM - RH

ссылка	Номер детали	Кол-во	Описание
35	84053757	2	SUPPORT, RH, WITH TRACKS AND TW800/65 ONLY
36	86511042	4	SCREW, Cross Pan Hd, M4 x 16, , WITH TRACKS AND TW800/65 ONLY
37	140013	4	WASHER, M4, , WITH TRACKS AND TW800/65 ONLY
38	100012	4	NUT, M4, Cl 8, , WITH TRACKS AND TW800/65 ONLY
26	16043224	2	BOLT, Hex, M8 x 16, 8.8, Full Thd,

06.04(01) OPERATOR'S PLATFORM AND EXTENSIONS - LH

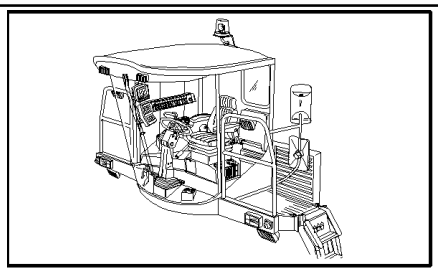

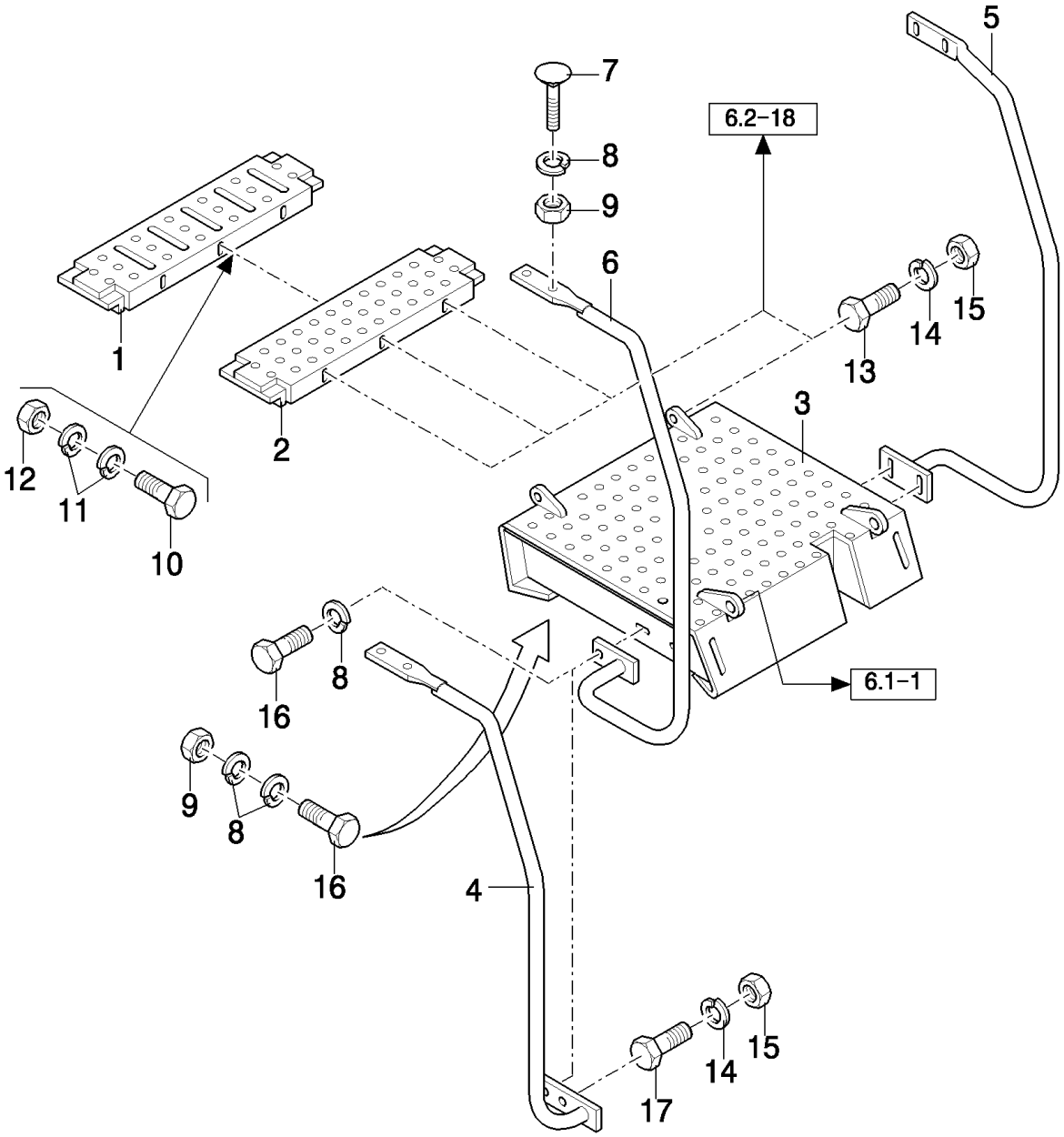

TX68 COMBINE - BASE UNIT

06.04(01) OPERATOR'S PLATFORM AND EXTENSIONS - LH

ссылка	Номер детали	Кол-во	Описание
1	9814888	AR	EXTENSION, 200MM, WITH "TERRA" TYRES
2	9831162	1	EXTENSION, 100MM, WITH "TERRA" TYRES, FOR TX66-67-68 ONLY
3	84007275	1	EXTENSION, , WITH "TERRA" TYRES, -C1065
4	84007280	1	HANDRAIL, , WITH "TERRA" TYRES, -C1065
5	84007284	1	HANDRAIL, , WITH "TERRA" TYRES, -C1065
5	9831221	1	HANDRAIL, , WITH 200MM EXTENSION, WITH 100MM EXTENSION, -C6405
5	84002382	1	HANDRAIL, , WITH 100MM EXTENSION, WITH 200MM EXTENSION, -C0033
5	84035533	1	HANDRAIL, , WITH 200MM EXTENSION, WITH 100MM EXTENSION, D7550-
5	84035533	1	HANDRAIL, , WITH "TERRA" TYRES, D1066-
6	9831217	1	HANDRAIL, , WITH 200MM EXTENSION, -C6405
6	84002385	1	HANDRAIL, , WITH 200MM EXTENSION, WITH 100MM EXTENSION, -C0033
6	84035532	1	HANDRAIL, , WITH 100MM EXTENSION, WITH 200MM EXTENSION, D7550-
6	84035532	1	HANDRAIL, , WITH "TERRA" TYRES, D1066-
6	9831215	1	HANDRAIL, , WITH 100MM EXTENSION, -C6405
7	86512444	AR	BOLT, CARRIAGE, Short NK, M8 x 40, Cl8.8, Full Thd, M8x40
8	322358	AR	WASHER, SPRING, Belleville, M8,
9	9706690	AR	NUT, M8, Cl 8,
10	80120099	AR	BOLT, Hex, M6 x 16, 8.8,
11	322357	AR	WASHER, SPRING, Belleville, M6,
12	15896221	AR	NUT, M6, Cl 10,
13	43138	AR	SCREW, Hex, M10 x 20, 8.8, Full Thd, M10x25
14	140045	AR	WASHER, SPRING, Belleville, M10,
15	100016	AR	NUT, M10, Cl 8,
16	120104	1	SCREW, Hex, M8 x 20, 8.8,
17	43140	4	BOLT, Hex, M10 x 30, 8.8, Full Thd,

06.05(01) PIVOTING STEERING COLUMN

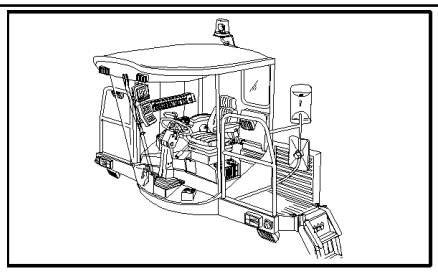

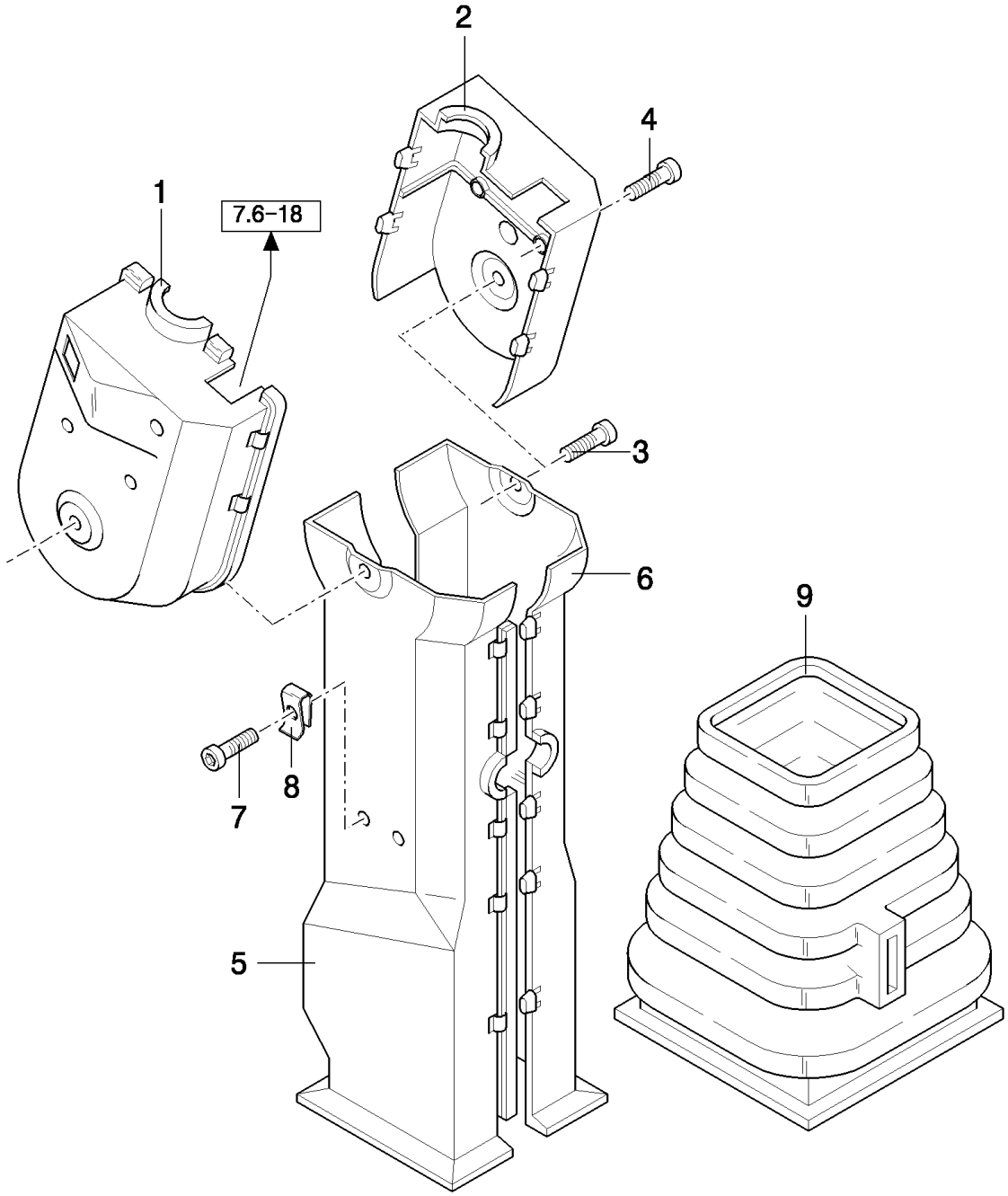

TX68 COMBINE - BASE UNIT

06.05(01) PIVOTING STEERING COLUMN

ссылка	Номер детали	Кол-во	Описание
1	84014915	1	COVER, PLASTIC
2	84014916	1	COVER, PLASTIC
3	43128	1	BOLT, Hex, M8 x 30, 8.8,
4	86511042	4	SCREW, Cross Pan Hd, M4 x 16, M14x14
5	84014918	1	COVER, PLASTIC
6	84014963	1	COVER, PLASTIC
7	9819754	4	SCREW,
8	9819712	4	CLIP,
9	9819608	1	BELLOWS,

06.06(01) PIVOTING STEERING COLUMN

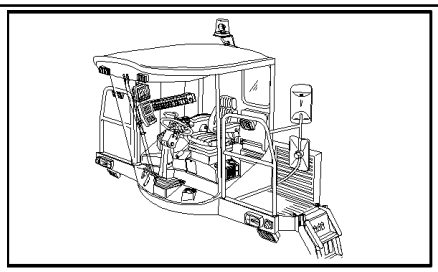

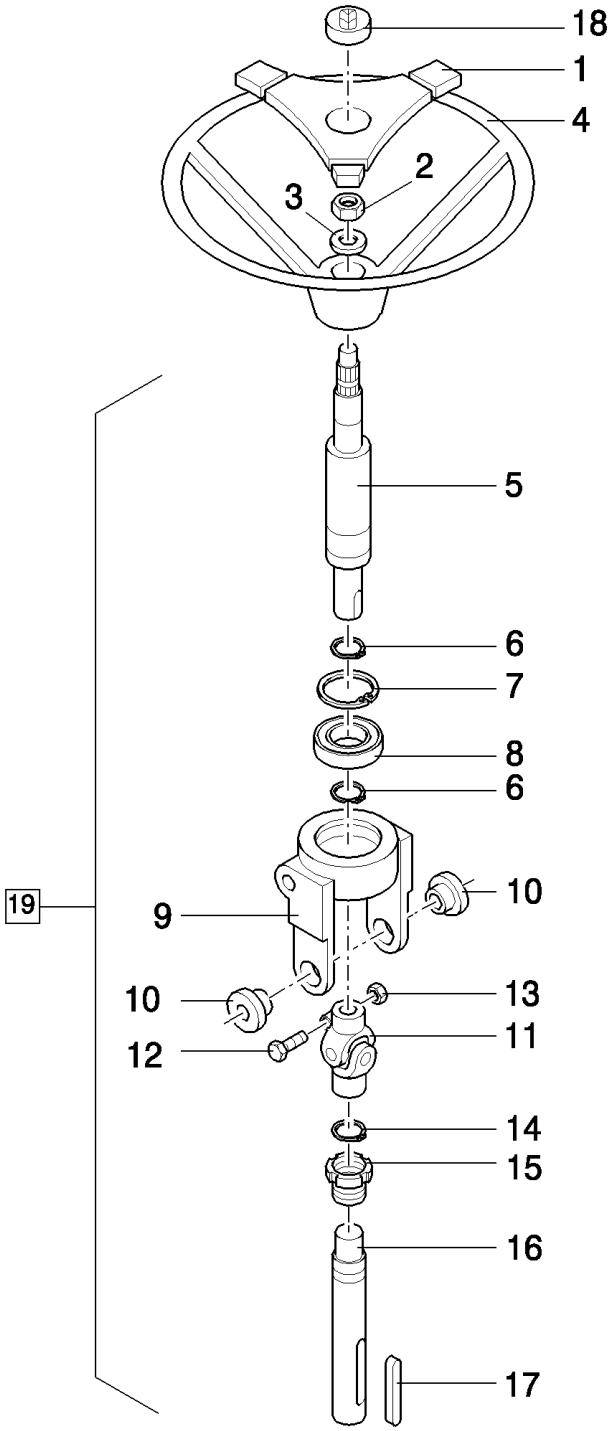

TX68 COMBINE - BASE UNIT

06.06(01) PIVOTING STEERING COLUMN

ссылка	Номер детали	Кол-во	Описание
1	84015153	1	COVER, PLASTIC
2	86511416	1	NUT, Jam, 5/8"-18, G2, 5/8-18UNF
3	140048	1	WASHER, SPRING, Belleville, M16,
4	82016844	1	STEERING WHEEL,
5	84014884	1	SHAFT,
6	370024	2	RING, SNAP, M20, Ext,
7	300645	1	RING, SNAP, M42, Int,
8	412669	1	BEARING, BALL,
9	84014885	1	YOKE,
10	84014886	2	BUSHING,
11	84056200	1	JOINT, UNIVERSAL,
12	412479	1	BOLT, Hex, M8 x 35, 8.8,
13	86629542	1	NUT, LOCK, M8 x 1.25, Cl 8,
14	370001	1	RING, SNAP, M22, Ext,
15	84014883	1	NUT,
16	84014880	1	SHAFT,
17	84014882	1	KEY,
18	84015154	1	EMBLEM,
19	89818434	1	STEERING COLUMN, (5 to 17, 06.07, 06.08, 06.09)

06.07(01) PIVOTING STEERING COLUMN

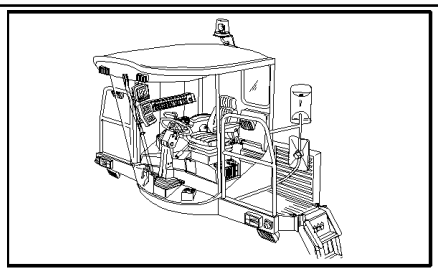

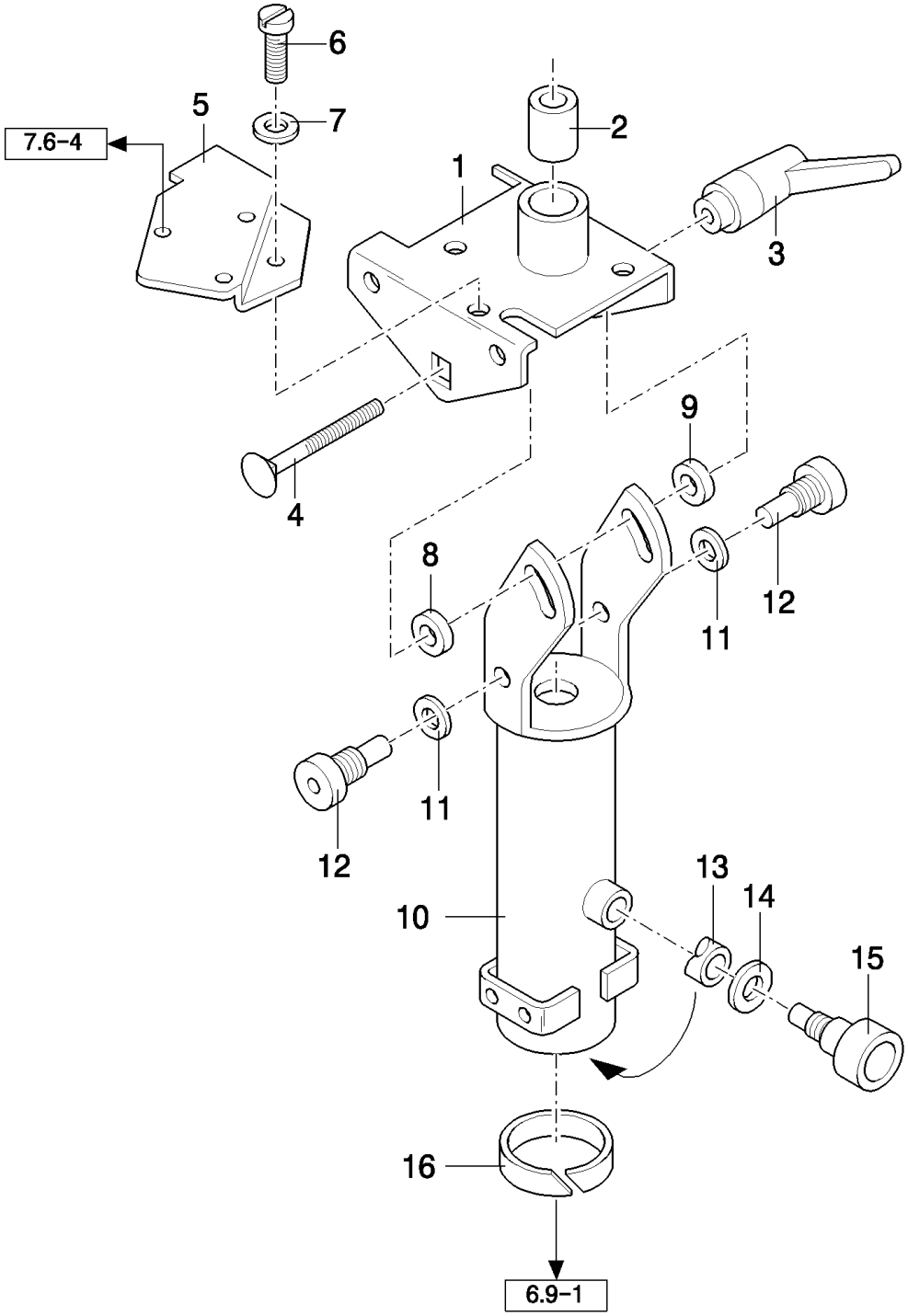

TX68 COMBINE - BASE UNIT

06.07(01) PIVOTING STEERING COLUMN

ссылка	Номер детали	Кол-во	Описание
1	84014912	1	SUPPORT,
2	84014911	1	BUSHING,
3	84014891	1	HANDLE,
4	84014888	1	SCREW,
5	84014914	1	SUPPORT,
6	321803	2	SCREW, Cross Pan Hd, M4 x 10,
7	322355	2	WASHER, Belleville, M4,
8	84014889	1	WASHER, LOCK,
9	84014890	1	WASHER, LOCK,
10	84014875	1	STEERING COLUMN,
11	140028	2	WASHER, M10,
12	84014887	2	SCREW,
13	84014910	1	WASHER,
14	140045	1	WASHER, SPRING, Belleville, M10,
15	84014909	1	KNOB,
16	84014877	2	SLEEVE,

06.08(01) PIVOTING STEERING COLUMN

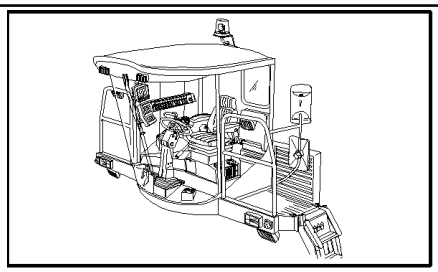

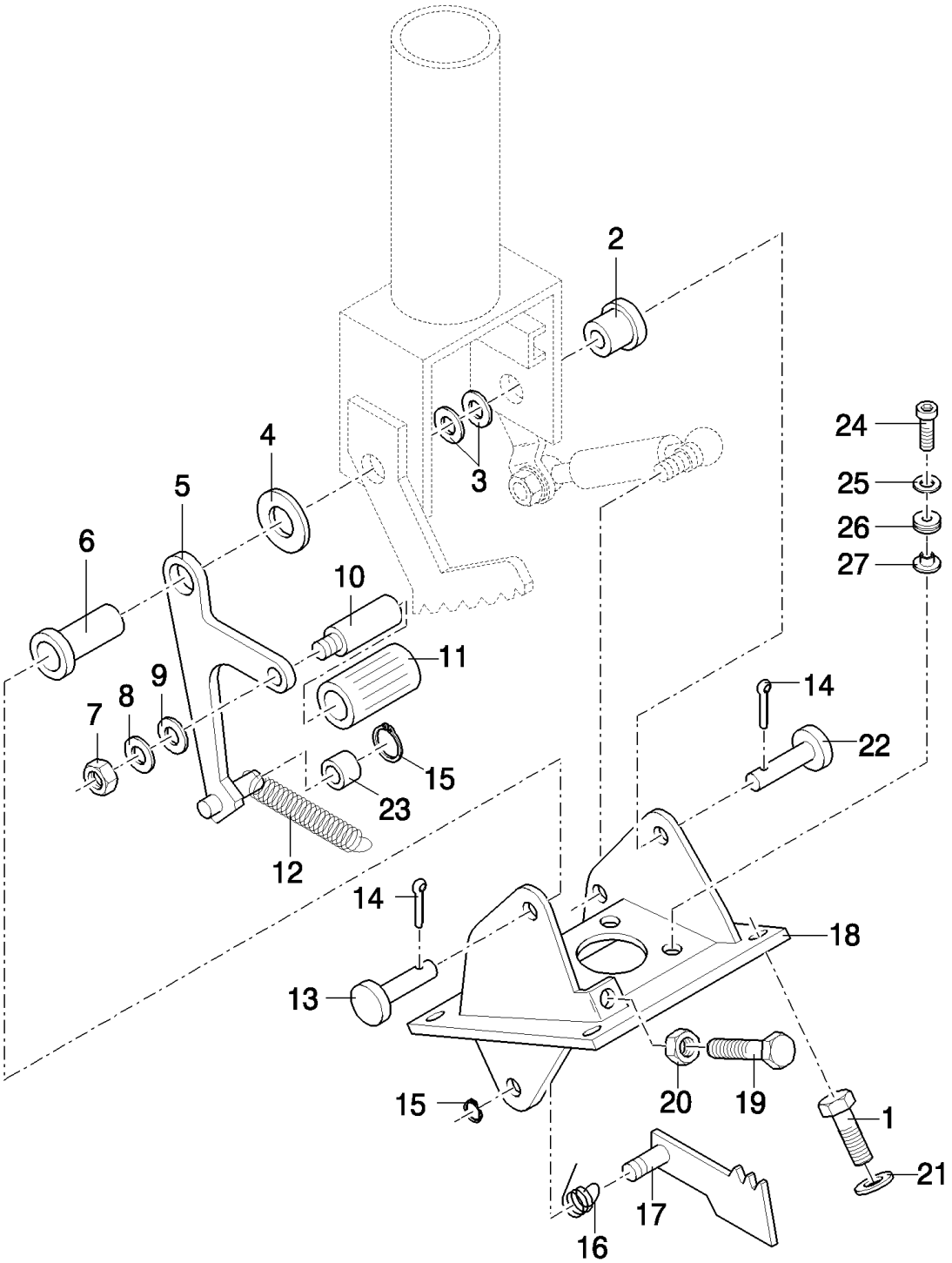

TX68 COMBINE - BASE UNIT

06.08(01) PIVOTING STEERING COLUMN

ссылка	Номер детали	Кол-во	Описание
1	120104	1	SCREW, Hex, M8 x 20, 8.8,
2	84014896	1	BUSHING,
3	325291	2	WASHER,
4	84014898	1	WASHER,
5	84014899	1	LEVER,
6	84014897	1	BUSHING,
7	100016	1	NUT, M10, Cl 8,
8	140028	1	WASHER, M10,
9	378244	1	WASHER, M10,
10	84014905	1	PEDAL,
11	84014906	1	PAD, RUBBER,
12	84014904	1	SPRING,
13	84014894	1	PIN,
14	130007	2	PIN, SPLIT (COTTER), M4 x 25,
15	84014901	2	CIRCLIP,
16	84014903	1	SPRING,
17	84014902	1	TAB, LOCKING,
18	84014893	1	SUPPORT,
19	43128	1	BOLT, Hex, M8 x 30, 8.8, Front
19	120104	5	SCREW, Hex, M8 x 20, 8.8, Rear
20	9706690	2	NUT, M8, Cl 8,
21	322358	6	WASHER, SPRING, Belleville, M8,
22	84014895	1	PIN,
23	84014900	1	BUSHING,
24	88011	AR	BOLT, Hex, 3/8"-16 x 1 1/4", G5, Full Thd,
25	140045	AR	WASHER, SPRING, Belleville, M10,
26	89514935	4	SHOCK ABSORBER,
27	89819785	4	FLANGE,

06.09(01) PIVOTING STEERING COLUMN

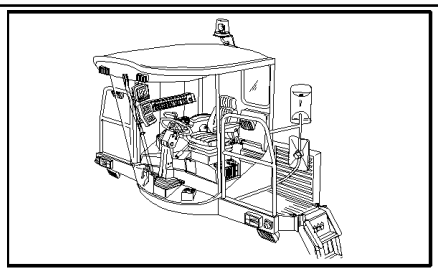

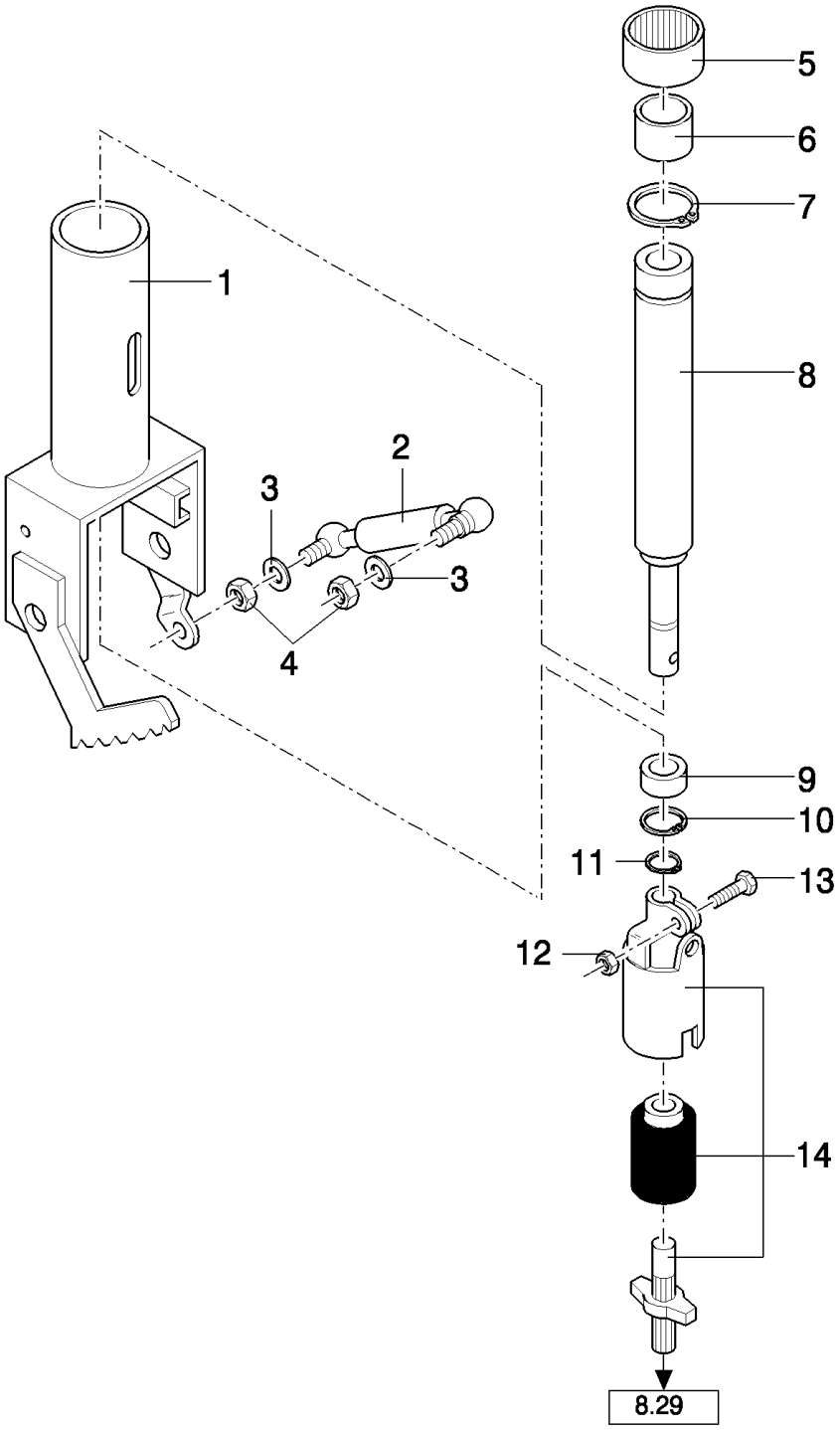

TX68 COMBINE - BASE UNIT

06.09(01) PIVOTING STEERING COLUMN

ссылка	Номер детали	Кол-во	Описание
1	84014876	1	STEERING COLUMN,
2	84014907	1	GAS STRUT,
3	322358	2	WASHER, SPRING, Belleville, M8,
4	9706690	2	NUT, M8, Cl 8,
5	84014913	1	BEARING ASSY,
6	84014878	1	BUSHING,
7	11068376	1	RING, SNAP, M35, Ext x 1.5 Thk,
8	84014879	1	GUIDE,
9	412669	1	BEARING, BALL,
10	300645	1	RING, SNAP, M42, Int,
11	370024	1	RING, SNAP, M20, Ext,
12	86629542	1	NUT, LOCK, M8 x 1.25, Cl 8,
13	412479	1	BOLT, Hex, M8 x 35, 8.8,
14	84014908	1	JOINT, UNIVERSAL,

06.10(01) AIR CONDITIONER

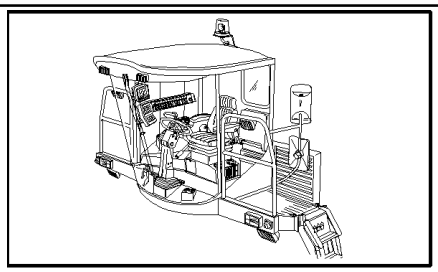

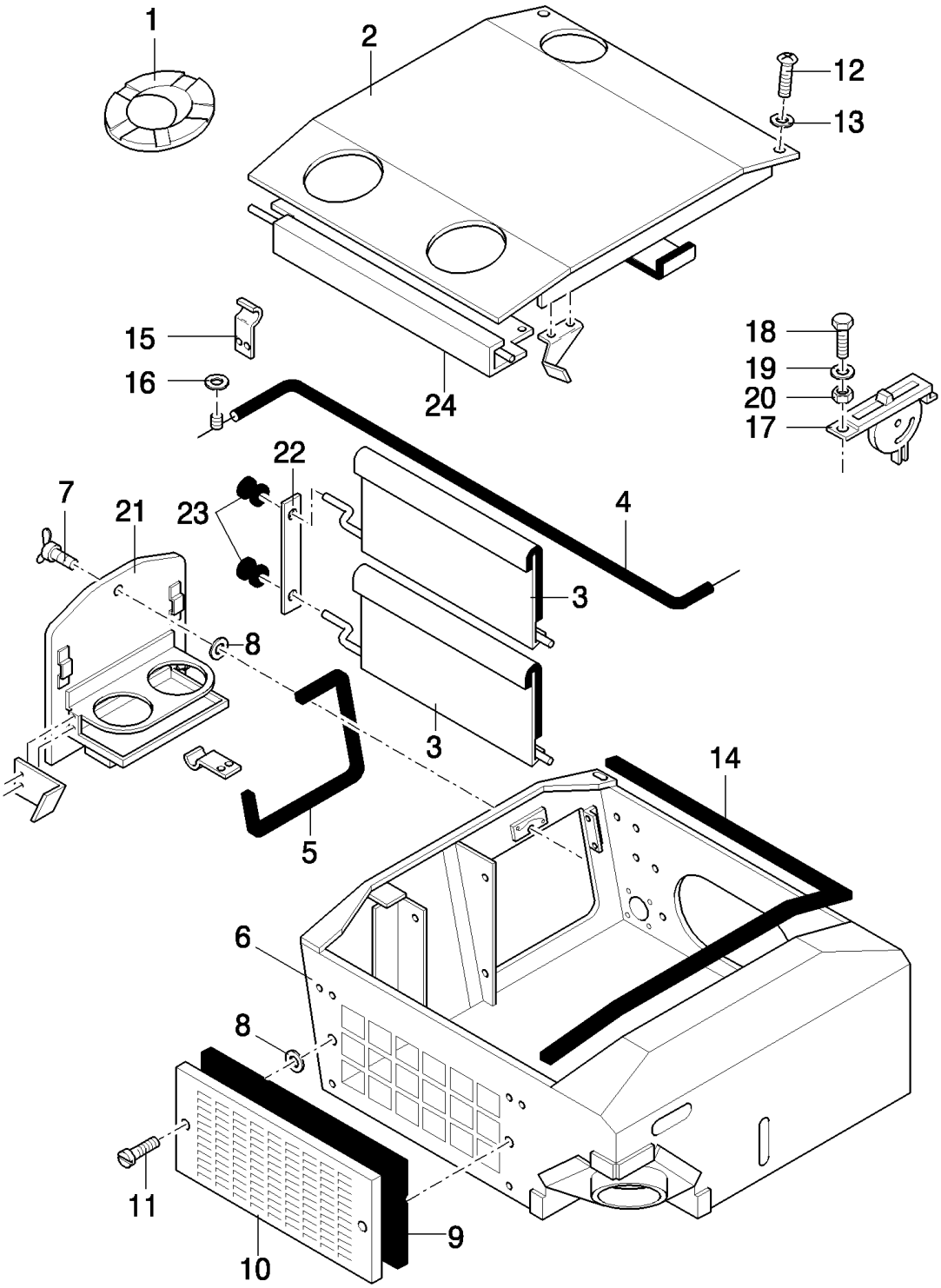

TX68 COMBINE - BASE UNIT

06.10(01) AIR CONDITIONER

ссылка	Номер детали	Кол-во	Описание
1	84015380	3	PIPE, VENTILATION,
2	84015373	1	COVER, , -C7520
2	84043996	1	COVER, , D7520-
3	84015374	1	COVER, , -C7520
3	84043997	1	COVER, UPPER, D7520-
3	84043998	1	COVER, LOWER, D7520-
4	84015385	1	CABLE, , -C7520
4	84015385	2	CABLE, , D7520-
5	84015382	1	ELEMENT, SEALING,
6	84015371	1	ENVELOPE, , -C5510
6	84032084	1	ENVELOPE, , -C0038
6	84043995	1	ENVELOPE, , D7520-
7	84015391	1	SCREW,
8	84015390	3	RING, LOCKING,
9	84015381	1	FILTER, ELEMENT, , -C5620
9	84021840	1	FILTER, CAB, , -C0039
9	84045002	1	FILTER, CAB, , D7520-
10	84015379	1	GRILLE, , -C5620
10	84021839	1	GRILLE, , -C0039
10	84043999	1	GRILLE, , D7520-
11	84015389	2	SCREW, , -C5620
11	84023290	2	SCREW, , D5620-
12	62320	2	SCREW, M10x25
13	378244	2	WASHER, M10,
14	84015383	1	SEAL, , -C7520
14	84045003	1	ELEMENT, SEALING, , D7520-
15	84015376	2	BRACKET,
16	426735	1	RING, LOCKING,
17	9833562	1	CONTROL,
18	412475	1	SCREW,
19	322355	1	WASHER, Belleville, M4,
20	100012	1	NUT, M4, Cl 8,
21	84032082	1	DOOR, , -C5510
21	84032083	1	DOOR, , D5510-
22	84045001	1	PLATE, COVER, , D7520-
23	426735	2	RING, LOCKING, , D7520-
24	84068438	1	PLATE, , -C7520
24	84068439	1	PLATE, , D7520-

06.11(01) AIR CONDITIONER

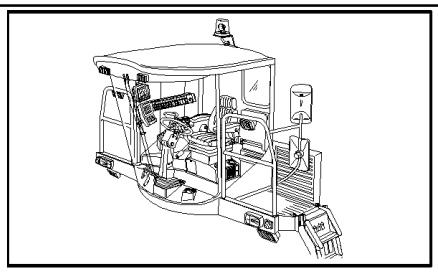

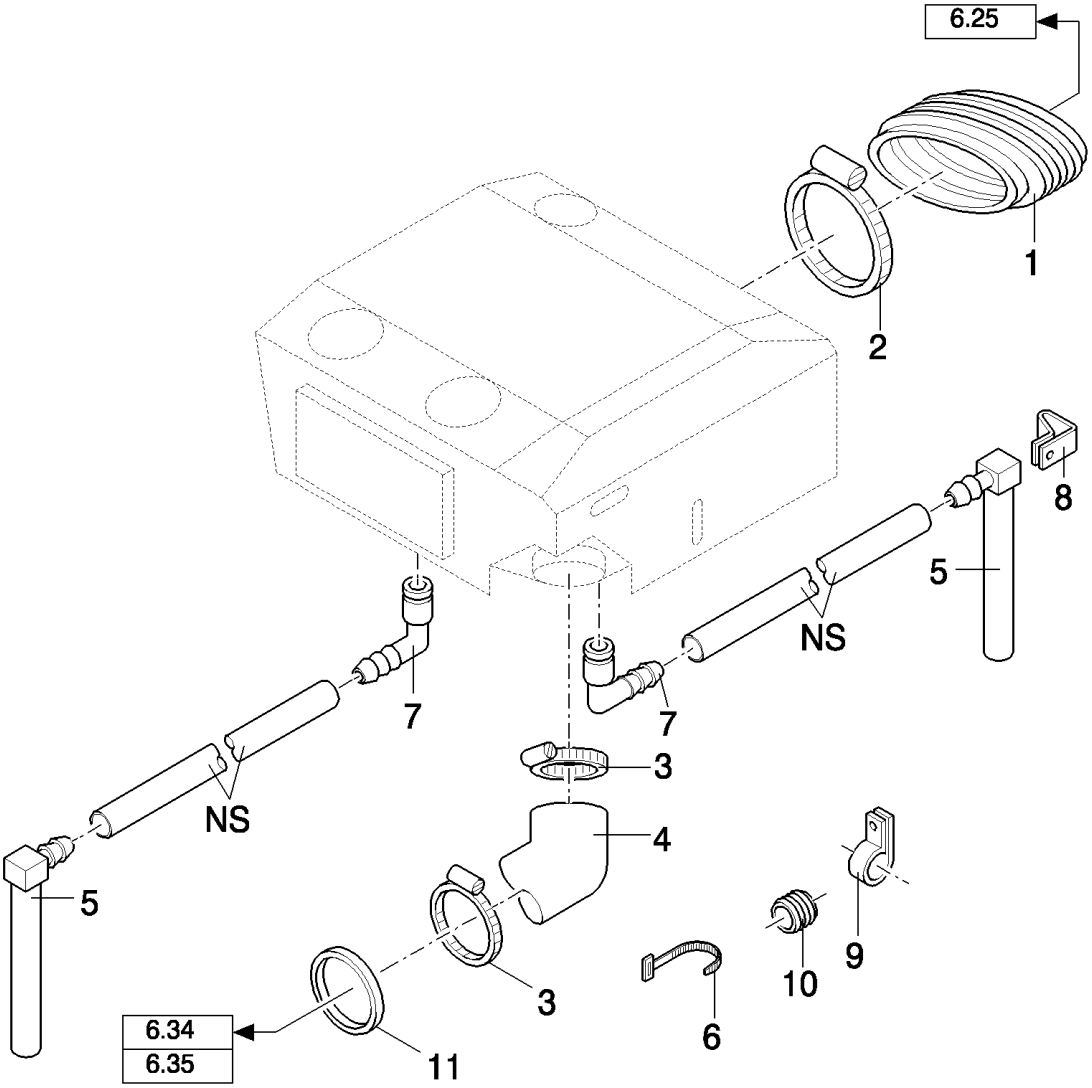

TX68 COMBINE - BASE UNIT

06.11(01) AIR CONDITIONER

ссылка	Номер детали	Кол-во	Описание
1	9819551	1	HOSE,
2	84011664	2	CLAMP,
3	381144	2	CLAMP, HOSE, #60, 3.31/4.25 Type F Worm,
4	84012306	1	HOSE, , -C7520
4	84038369	1	HOSE, , -C0050
4	84400356	1	HOSE, , D1164-
5	9833900	2	TUBE,
6	323597	AR	STRAP, CABLE, M9 x 165 or M5 x 197,
7	9850816	2	ELBOW,
8	9513271	AR	CLAMP,
9	711051	AR	CLAMP,
10	102043	2	GROMMET,
11	84400209	1	COLLAR, , D1164-

06.12(01) AIR CONDITIONER

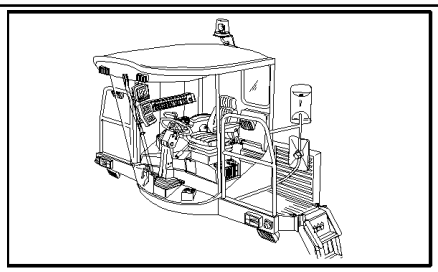

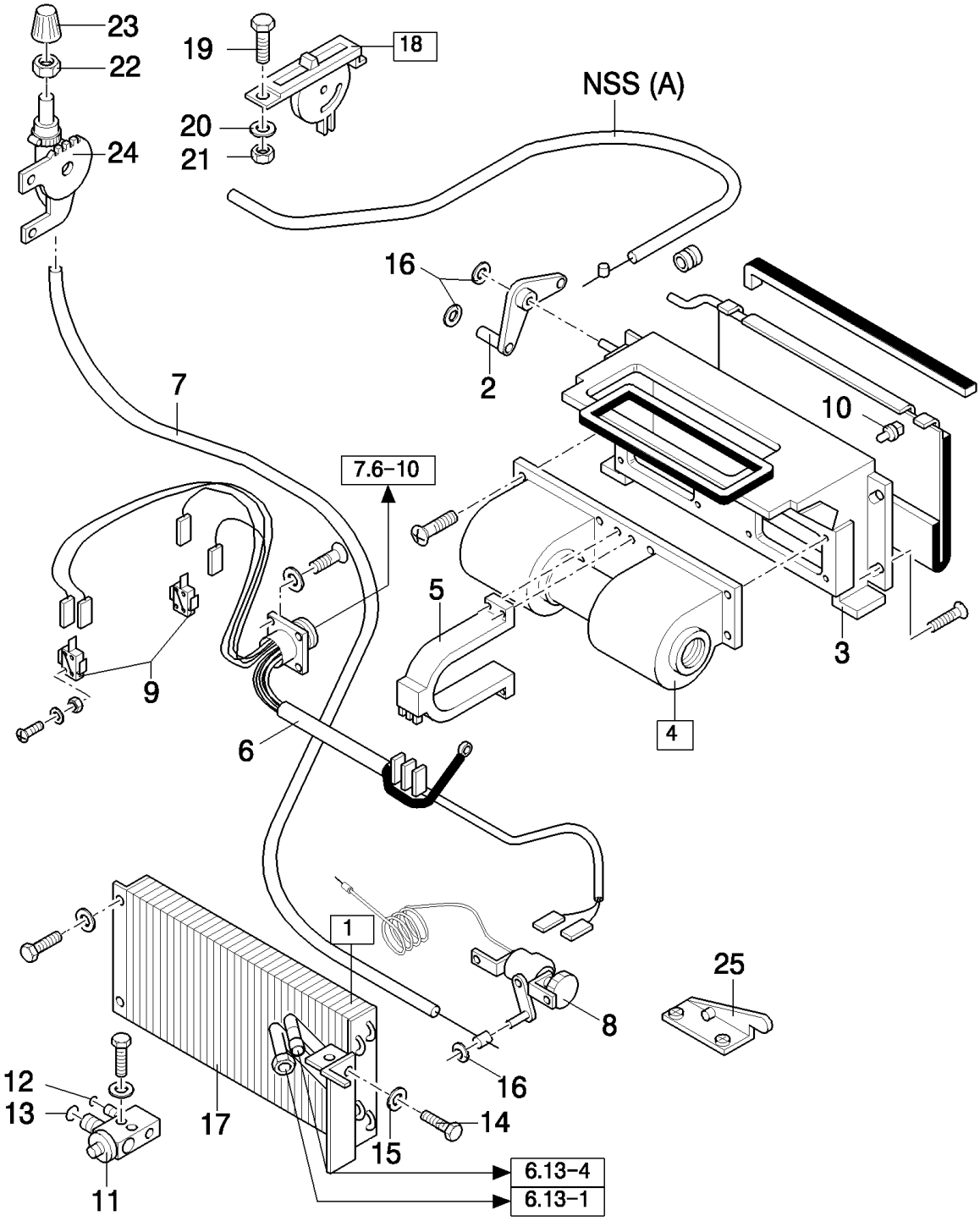

ALL PARTS WITHOUT No. ARE NOT AVAILABLE

TX68 COMBINE - BASE UNIT

06.12(01) AIR CONDITIONER

ссылка	Номер детали	Кол-во	Описание
1	9850814	1	EVAPORATOR, (11 to 15,17), -C7520
1	84038330	1	EVAPORATOR, (11 to 15,17), D7520-
2	84015375	1	LEVER,
3	84015372	1	ENVELOPE,
4	9512492	1	BLOWER, (5)
5	84015395	1	RESISTOR,
6	84015378	1	HARNESS, WIRE, , -C7520
6	84045000	1	HARNESS, WIRE, , D7520-
7	84015394	1	CABLE,
8	84015392	1	THERMOSTAT, , -C7520
8	84037990	1	THERMOSTAT, , D7520-
9	84015384	2	SWITCH ASSY,
10	84015388	2	CLIP,
11	84015397	1	VALVE,
12	84817009	1	O-RING,
13	84015398	1	O-RING,
14	120102	2	SCREW, Hex, M6 x 40, 8.8, Full Thd,
15	140015	2	WASHER, 6MM
16	426735	3	RING, LOCKING,
17	84019381	1	EVAPORATOR, , -C7520
17	84045396	1	EVAPORATOR, , D7520-
18	9833562	1	CONTROL, (A)
19	412475	1	SCREW,
20	322355	1	WASHER, Belleville, M4,
21	100012	1	NUT, M4, Cl 8,
22	84000368	1	NUT, 7/16"-20, G2,
23	9832337	1	KNOB,
24	84015393	1	CONTROL,
25	84042749	1	BRACKET, , -C7520

ALL PARTS WITHOUT No. ARE NOT AVAILABLE

06.13(01) AIR CONDITIONER, ENGINE PARTS

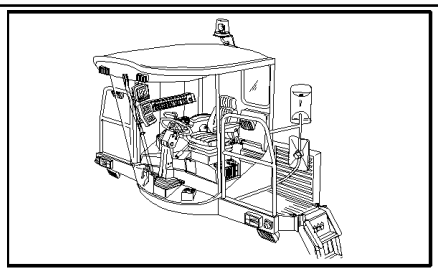

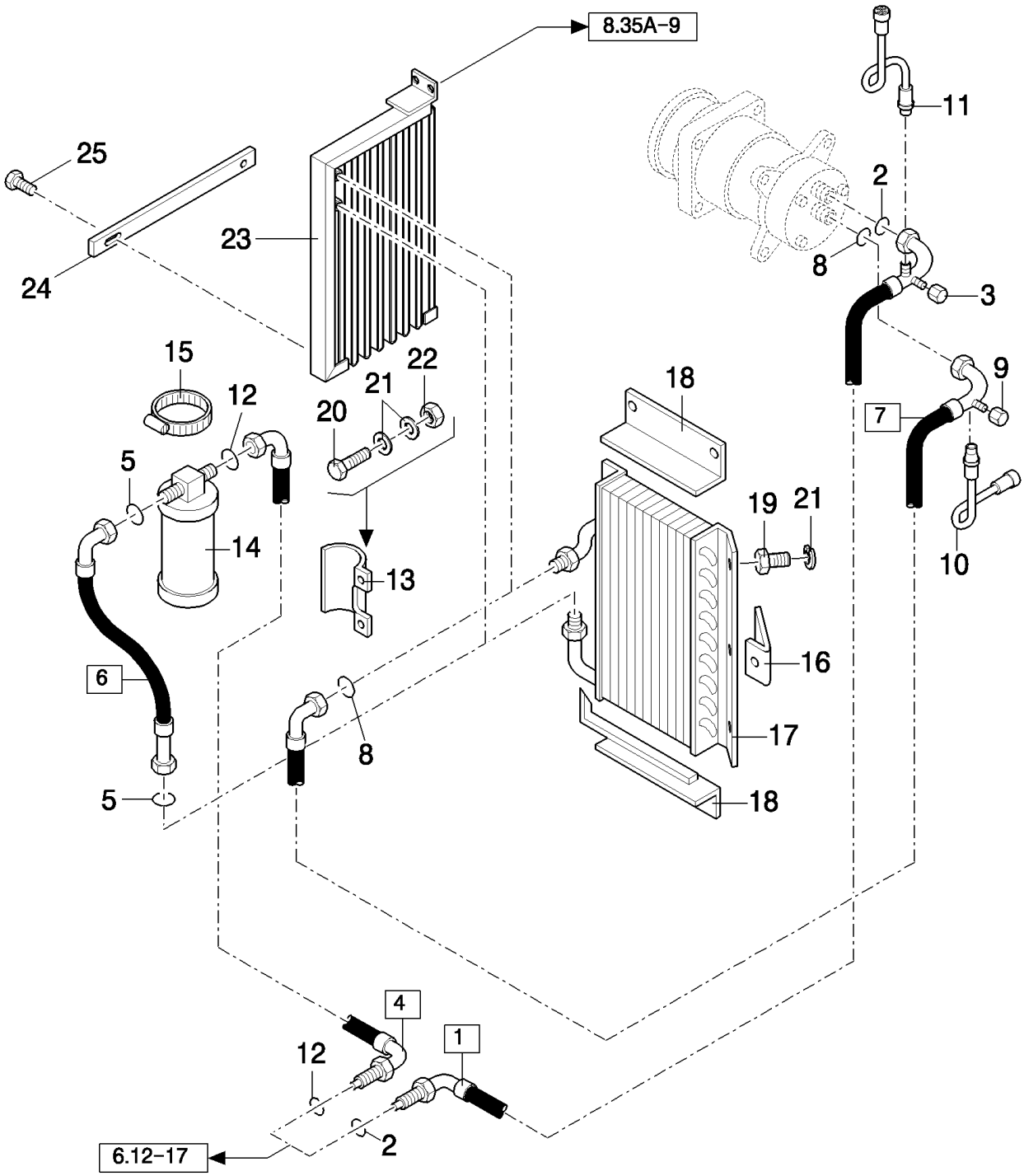

TX68 COMBINE - BASE UNIT

06.13(01) AIR CONDITIONER, ENGINE PARTS

ссылка	Номер детали	Кол-во	Описание
1	9819878	1	HOSE, FLEXIBLE, (2,3), FOR TX66 ONLY, -C1032
1	84015099	1	HOSE, FLEXIBLE, (2,3), FOR TX68PLUS ONLY, D1033-
1	9819878	1	HOSE, FLEXIBLE, (2,3), NOT FOR TX68PLUS, FOR TX68 ONLY, -C1076
1	84038283	1	HOSE, HYDRAULIC, (2,3), FOR TX68 ONLY, NOT FOR TX68PLUS, D1077-
1	84011361	1	HOSE, HYDRAULIC, (2,3), FOR TX62-64-65 ONLY, -C1032
1	84038283	1	HOSE, HYDRAULIC, (2,3), FOR TX62-63-64-65-66-67 ONLY, D1033-
2	89827059	2	O-RING, , BLACK
2	82000791	2	O-RING, , GREEN
3	9843388	1	DUST CAP,
4	9819877	1	HOSE, FLEXIBLE, (12), FOR TX66 ONLY, -C1032
4	84021653	1	HOSE, HYDRAULIC, (12), FOR TX62-64-65 ONLY, -C1032
4	84038282	1	HOSE, HYDRAULIC, (12), FOR TX68PLUS ONLY, D1033-
4	9819877	1	HOSE, FLEXIBLE, (12), NOT FOR TX68PLUS, FOR TX68 ONLY, -C1076
4	84038282	1	HOSE, HYDRAULIC, (12), FOR TX68 ONLY, NOT FOR TX68PLUS, D1077-
5	9827060	2	O-RING, , BLACK
5	82000793	2	O-RING, 5/16" ID x .070" Thk, Green, GREEN
6	9819871	1	HOSE, FLEXIBLE, [5(2x)], FOR TX66 ONLY, -C1032
6	84011362	1	HOSE, FLEXIBLE, [5(2x)], FOR TX62-64-65 ONLY, -C1032
6	84038281	1	HOSE, HYDRAULIC, (5), FOR TX62-63-64-65-66-67 ONLY, FOR TX68PLUS ONLY, D1033-
6	9819871	1	HOSE, FLEXIBLE, (5), NOT FOR TX68PLUS, FOR TX68 ONLY, -C1076
6	84038281	1	HOSE, HYDRAULIC, (5), FOR TX68 ONLY, NOT FOR TX68PLUS, D1077-
7	9819873	1	HOSE, FLEXIBLE, (8,9), FOR TX66 ONLY, -C1032
7	9819873	1	HOSE, FLEXIBLE, (8,9), FOR TX62-64-65 ONLY, -C1032
7	84038284	1	HOSE, HYDRAULIC, (8,9), FOR TX68PLUS ONLY, D1033-
7	9819873	1	HOSE, FLEXIBLE, (8,9), NOT FOR TX68PLUS, FOR TX68 ONLY, -C1076
7	84038284	1	HOSE, HYDRAULIC, (8,9), FOR TX68 ONLY, NOT FOR TX68PLUS, D1077-
8	9827058	2	O-RING, .426" ID x .070" Thk, BLACK
8	82000792	2	O-RING, , GREEN
9	9843389	1	DUST CAP,
10	03247432	1	SWITCH, A/C HIGH PRESSURE,
11	03247424	1	SWITCH, A/C LOW PRESSURE,
12	9827060	2	O-RING, , BLACK, FOR TX62-63-64-65-67 ONLY
12	82000793	2	O-RING, 5/16" ID x .070" Thk, Green, FOR TX62-63-64-65-67 ONLY, GREEN
12	9837190	2	O-RING, , BLACK, FOR TX66-68 ONLY
12	82000793	2	O-RING, 5/16" ID x .070" Thk, Green, FOR TX66-68 ONLY, GREEN
13	9819763	1	SUPPORT,
14	9832539	1	RECEIVER-DRYER,
14	84031407	1	RECEIVER-DRYER, , FOR SCANDINAVIA ONLY
15	381144	1	CLAMP, HOSE, #60, 3.31/4.25 Type F Worm,
16	84014160	1	BRACKET, , FOR TX62-64-65-66-68 ONLY, -C1032
16	84014160	1	BRACKET, , NOT FOR TX68PLUS, FOR TX68 ONLY, D1033-
17	9850813	1	CONDENSER, , -C4425
17	84021139	1	CONDENSER, , FOR TX68 ONLY, NOT FOR TX68PLUS, -C0045
17	84021139	1	CONDENSER, , FOR TX62-64-65-66 ONLY, -C0037

ссылка	Номер детали	Кол-во	Описание
18	84015109	2	SHIELD, , -C1032
18	84015109	2	SHIELD, , NOT FOR TX68PLUS, FOR TX68 ONLY, D1033-
19	120104	AR	SCREW, Hex, M8 x 20, 8.8,
21	322358	AR	WASHER, SPRING, Belleville, M8,
22	9706690	AR	NUT, M8, Cl 8,
23	84026459	1	CONDENSER, , FOR TX68PLUS ONLY, D1030-
23	84026459	1	CONDENSER, , NOT FOR TX68PLUS, FOR TX68 ONLY, D1077-
24	84061839	2	SUPPORT,
25	412215	2	BOLT, Hex, M8 x 100, 8.8,
20	16043224	AR	BOLT, Hex, M8 x 16, 8.8, Full Thd,

06.14(01) AIR CONDITIONER, ENGINE PARTS

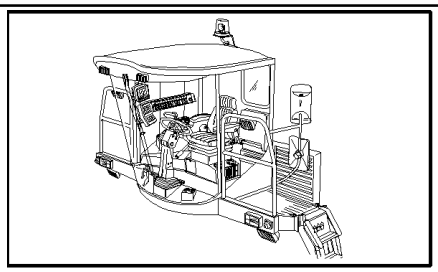

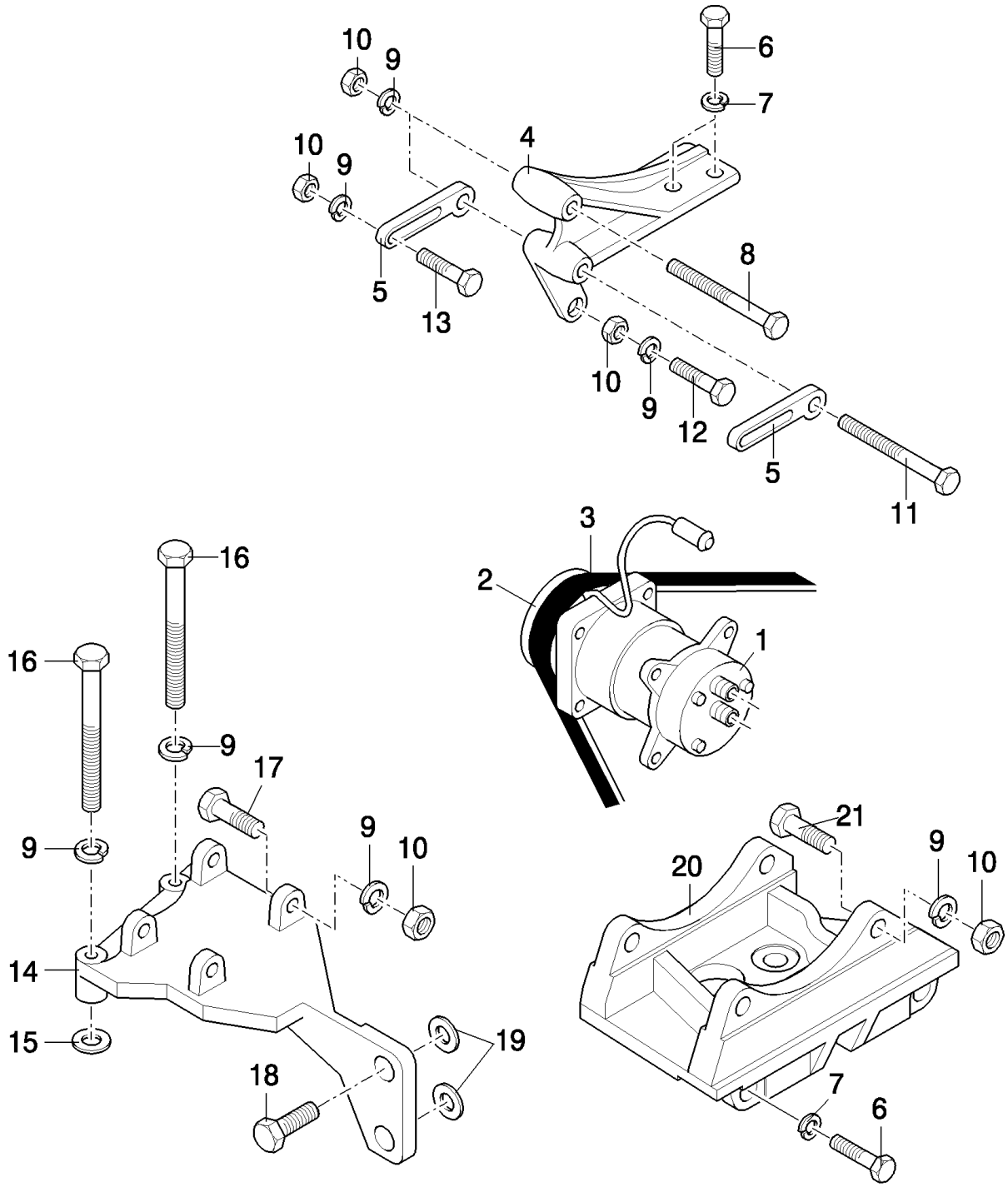

TX68 COMBINE - BASE UNIT

06.14(01) AIR CONDITIONER, ENGINE PARTS

ссылка	Номер детали	Кол-во	Описание
1	9831429	1	COMPRESSOR, AIR, (2), -C4420
1	84018078	1	COMPRESSOR, AIR, , FOR TX66 ONLY, -C0037
1	84011595	1	COMPRESSOR, AIR, , FOR TX68PLUS ONLY, D1033-
1	84018078	1	COMPRESSOR, AIR, , NOT FOR TX68PLUS, FOR TX68 ONLY, -C1076
1	84039022	1	COMPRESSOR, AIR, , FOR TX68 ONLY, NOT FOR TX68PLUS, D1077-
1	84018078	1	COMPRESSOR, AIR, , FOR TX62-64-65 ONLY, -C1032
1	84039022	1	COMPRESSOR, AIR, , FOR TX62-63-64-65-66-67 ONLY, D1030-
2	84019697	1	CLUTCH, , FOR TX62-64-65-66-68 ONLY, -C4420
2	84045066	1	CLUTCH, , FOR TX62-63-64-65-66-67 ONLY, D1030-
3	9835876	1	BELT, , FOR TX64-65-66 ONLY, -C1032
3	84007307	1	BELT, TRANSMISSION, , FOR TX68PLUS ONLY
3	84007307	1	BELT, TRANSMISSION, , NOT FOR TX68PLUS, FOR TX68 ONLY, -C1076
3	84036070	1	BELT, TRANSMISSION, , FOR TX68 ONLY, NOT FOR TX68PLUS, D1077-
3	80754165	1	BELT, TRANSMISSION, , FOR TX62 ONLY, -C1032
3	84036070	1	BELT, TRANSMISSION, , FOR TX62-63-64-65-66-67 ONLY, D1030-
4	84007260	1	SUPPORT, , FOR TX62-64-65-66 ONLY, -C1032
5	913808	2	BRACKET, , FOR TX62-64-65-66 ONLY, -C1032
6	9627887	2	BOLT, Hex, 7/16"-14 x 1 1/4", G5, , FOR TX62-63-64-65-66-67 ONLY
7	140046	2	WASHER, Belleville, M12, , FOR TX62-63-64-65-66-67 ONLY
8	331168	1	BOLT, Hex, M10 x 140, 8.8, , FOR TX62-64-65-66 ONLY
9	140045	AR	WASHER, SPRING, Belleville, M10,
10	100016	1	NUT, M10, Cl 8,
11	120075	1	SCREW, Hex, M10 x 100, 8.8, , FOR TX62-64-65-66 ONLY
12	120074	1	BOLT, Hex, M10 x 90, 8.8, , FOR TX62-64-65-66 ONLY
13	120112	2	BOLT, Hex, M10 x 40, 8.8, Full Thd, , FOR TX62-63-64-65-66-67 ONLY
14	9850357	2	SUPPORT, , NOT FOR TX68PLUS, FOR TX68 ONLY, -C1076
15	ZED140078	2	WASHER, , FOR TX68 ONLY
16	84007091	1	BOLT, Hex, M10 x 1.25 x 100, 8.8, M10x100, FOR TX68 ONLY
17	325829	4	BOLT, Hex, M10 x 45, 8.8, M10x40, FOR TX68 ONLY
18	412037	2	BOLT, Hex, M12 x 1.25 x 40, 8.8, Full Thd, M12x40, FOR TX68 ONLY
19	378245	2	WASHER, M12, , FOR TX68 ONLY
20	84038086	1	SUPPORT, , FOR TX62-63-64-65-66-67 ONLY, D1030-
20	84038086	1	SUPPORT, , FOR TX68 ONLY, NOT FOR TX68PLUS, D1077-
20	84015659	1	SUPPORT, , FOR TX68PLUS ONLY, D1033-
21	300443	4	SCREW, M10x35

06.15(01) HEATING

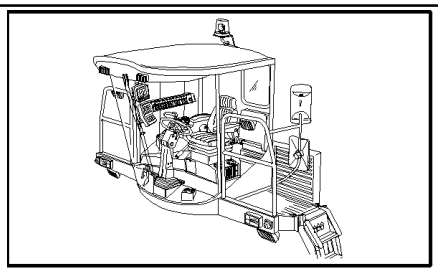

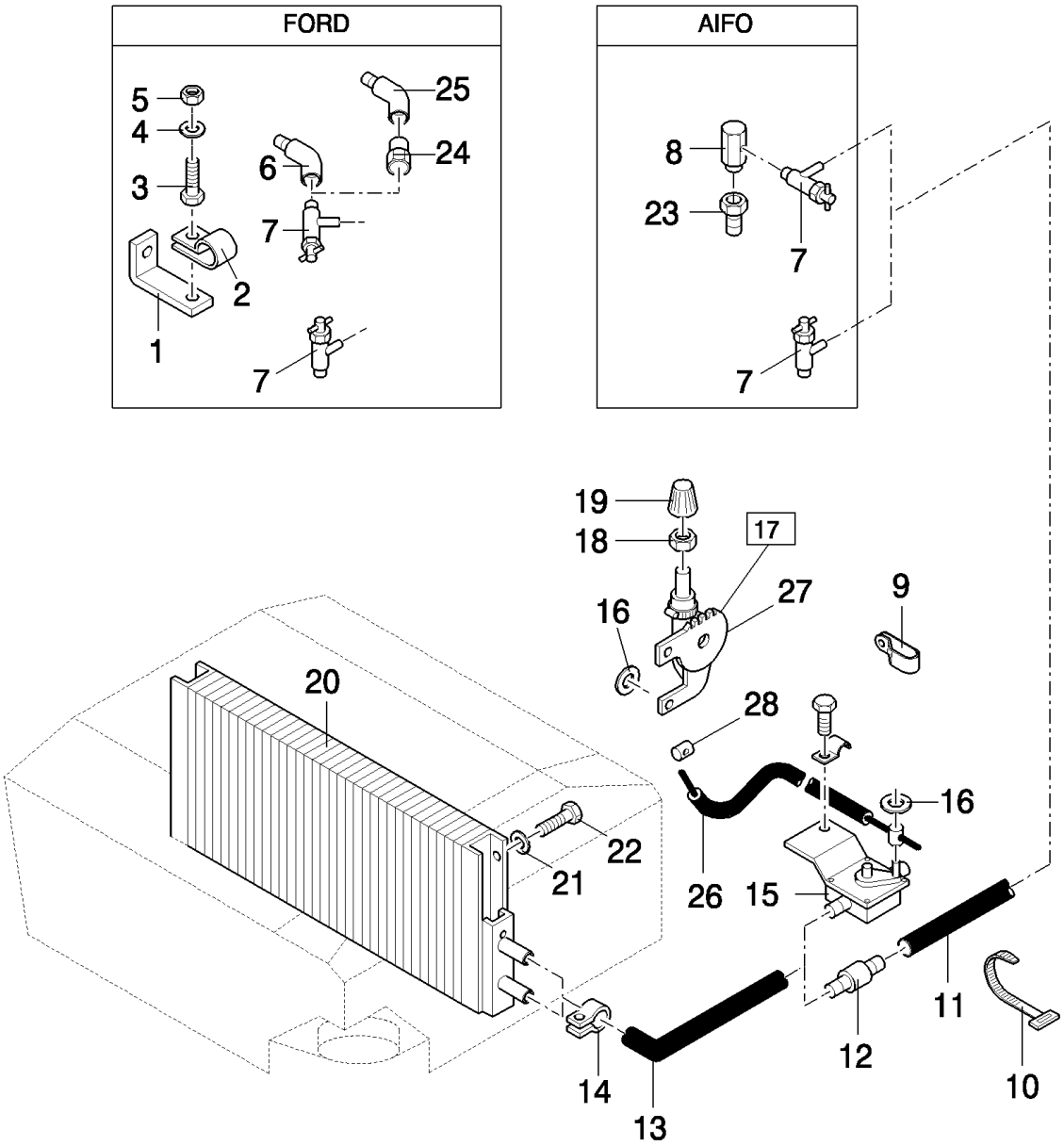

TX68 COMBINE - BASE UNIT

06.15(01) HEATING

ссылка	Номер детали	Кол-во	Описание
1	84007407	1	SUPPORT, , FOR TX62-64-65 ONLY, -C1032
2	9827902	5	CLAMP, 1", Insul, 3/8" Bolt, , FOR TX62-63-64-65 ONLY
3	120104	1	SCREW, Hex, M8 x 20, 8.8, , FOR TX62-64-65 ONLY
4	322358	1	WASHER, SPRING, Belleville, M8, , FOR TX62-64-65 ONLY
5	9706690	1	NUT, M8, Cl 8, , FOR TX62-64-65 ONLY
6	353779S	1	ELBOW, , FOR TX62-64-65 ONLY, -C1032
7	83961305	2	VALVE, SHUT-OFF,
8	84000247	1	CONNECTOR, HYD., , FOR TX66-68 ONLY
9	417412	6	CLAMP,
10	368582	5	STRAP,
11	420098	2	HOSE,
12	E8NN8594BA	1	CONNECTOR, HYD.,
13	9835205	2	ELBOW,
14	326082	8	CLAMP,
15	9832336	1	VALVE,
16	398561	1	CLIP,
17	9837974	1	CABLE, (16,26 to 28)
18	84000368	1	NUT, 7/16"-20, G2,
19	9850811	1	KNOB,
20	9850812	1	RADIATOR, , -C7520
20	84039021	1	RADIATOR, , D7520-
21	322358	3	WASHER, SPRING, Belleville, M8,
22	300806	3	SCREW, Hex, M5 x 10, 8.8, Full Thd,
23	84012391	1	JOINT, UNIVERSAL, , FOR TX66-68 ONLY
24	918688	1	CONNECTOR, HYD., , FOR ATA ENGINE ONLY
25	E7NN18599AA	1	ELBOW, , FOR ATA ENGINE ONLY
26	84058994	1	CABLE,
27	84058995	1	CONTROL,
28	84058996	1	SPIDER,

06.16(01) WINDSCREEN WIPER

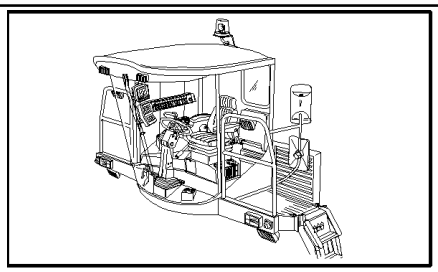

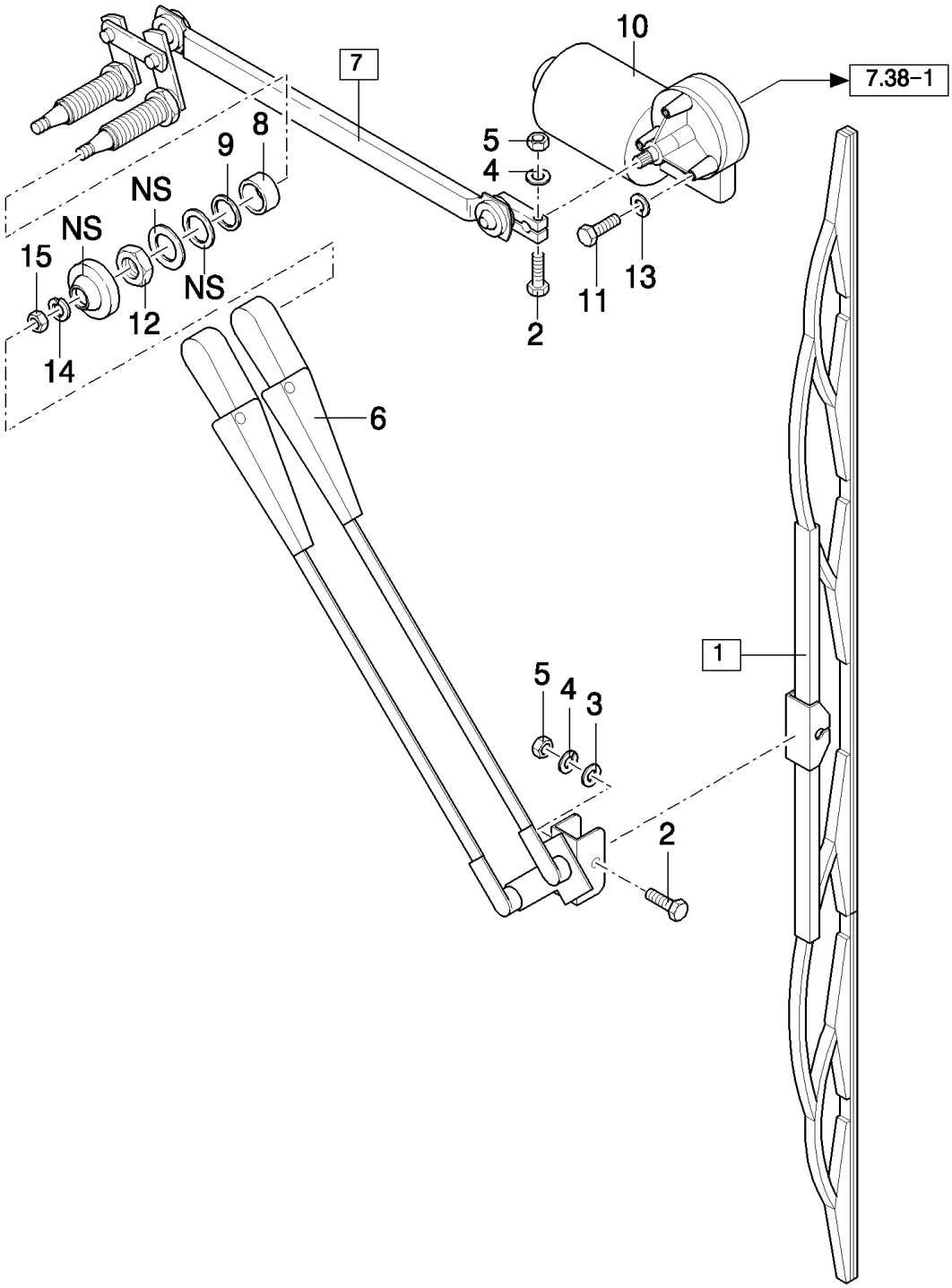

TX68 COMBINE - BASE UNIT

06.16(01) WINDSCREEN WIPER

ссылка	Номер детали	Кол-во	Описание
1	84007417	1	WIPER BLADE, (2 to 5)
2	120101	2	BOLT, Hex, M6 x 30, 8.8, Full Thd,
3	140044	1	WASHER, 6MM
4	140015	2	WASHER, 6MM
5	353308	2	NUT, M6 x 1, Cl 8,
6	84007418	1	ARM,
7	84007420	1	ARM, (8 to 15)
8	32406	1	SPACER,
9	412568	2	WASHER,
10	84007419	1	WIPER MOTOR,
11	80120099	3	BOLT, Hex, M6 x 16, 8.8,
12	412569	2	NUT, M26 x 1, Cl 8, M26
13	322357	3	WASHER, SPRING, Belleville, M6,
14	140045	2	WASHER, SPRING, Belleville, M10,
15	100016	2	NUT, M10, Cl 8,

06.17(01) CAB FRAME

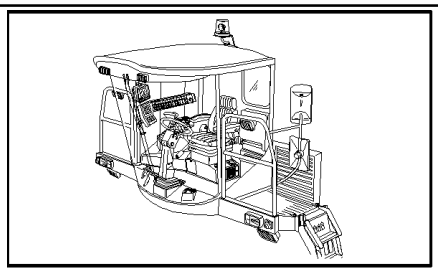

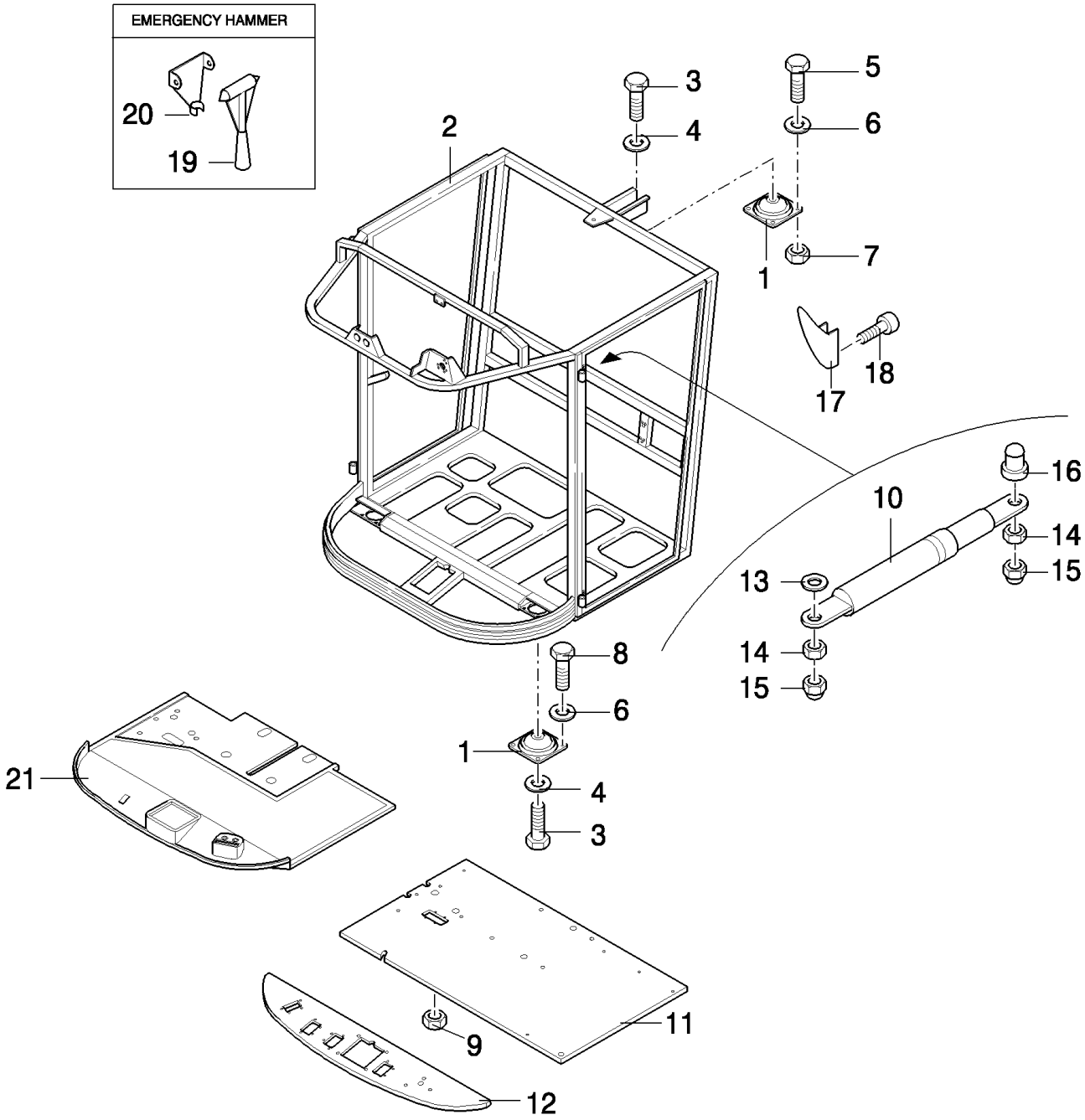

TX68 COMBINE - BASE UNIT

06.17(01) CAB FRAME

ссылка	Номер детали	Кол-во	Описание
1	84053736	3	DAMPER,
2	9500051	1	CAB, , FOR TX62-63-64-65-66-68 ONLY
2	84002930	1	CAB, , FOR TX67 ONLY, -C1076
2	9500051	1	CAB, , FOR TX67 ONLY, D1077-
3	9706687	3	SCREW, Hex, M12 x 30, 8.8,
4	140046	3	WASHER, Belleville, M12,
5	43128	4	BOLT, Hex, M8 x 30, 8.8,
6	322358	8	WASHER, SPRING, Belleville, M8,
7	9706690	4	NUT, M8, Cl 8,
9	353068	4	NUT,
10	89594808	1	GAS STRUT, , D4540-
11	84001503	1	FLOOR, , -C5500
11	84002531	1	FLOOR, , FOR TX62-63-64-65-66-68 ONLY, D5500-
11	84035304	1	FLOOR, , FOR TX67 ONLY
12	84001504	1	MAT, , -C5500
12	84001618	1	MAT, , D5500-
13	350240	1	WASHER, , D4540-
14	86629542	2	NUT, LOCK, M8 x 1.25, Cl 8, , D4540-
15	458639	2	CAP, Nut, M8, , D4540-
16	9812123	1	RING, , D4540-
17	9500198	1	HOOK,
18	80445395	1	RIVET,
19	89507312	1	HAMMER, , FOR RUSSIA ONLY, FOR TX65 ONLY
20	89507313	1	HOLDER, , FOR TX65 ONLY, FOR RUSSIA ONLY
21	84435822	1	MAT,
8	16043224	4	BOLT, Hex, M8 x 16, 8.8, Full Thd,

06.18(01) CAB WINDOW PANES

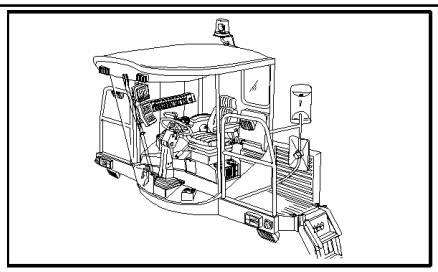

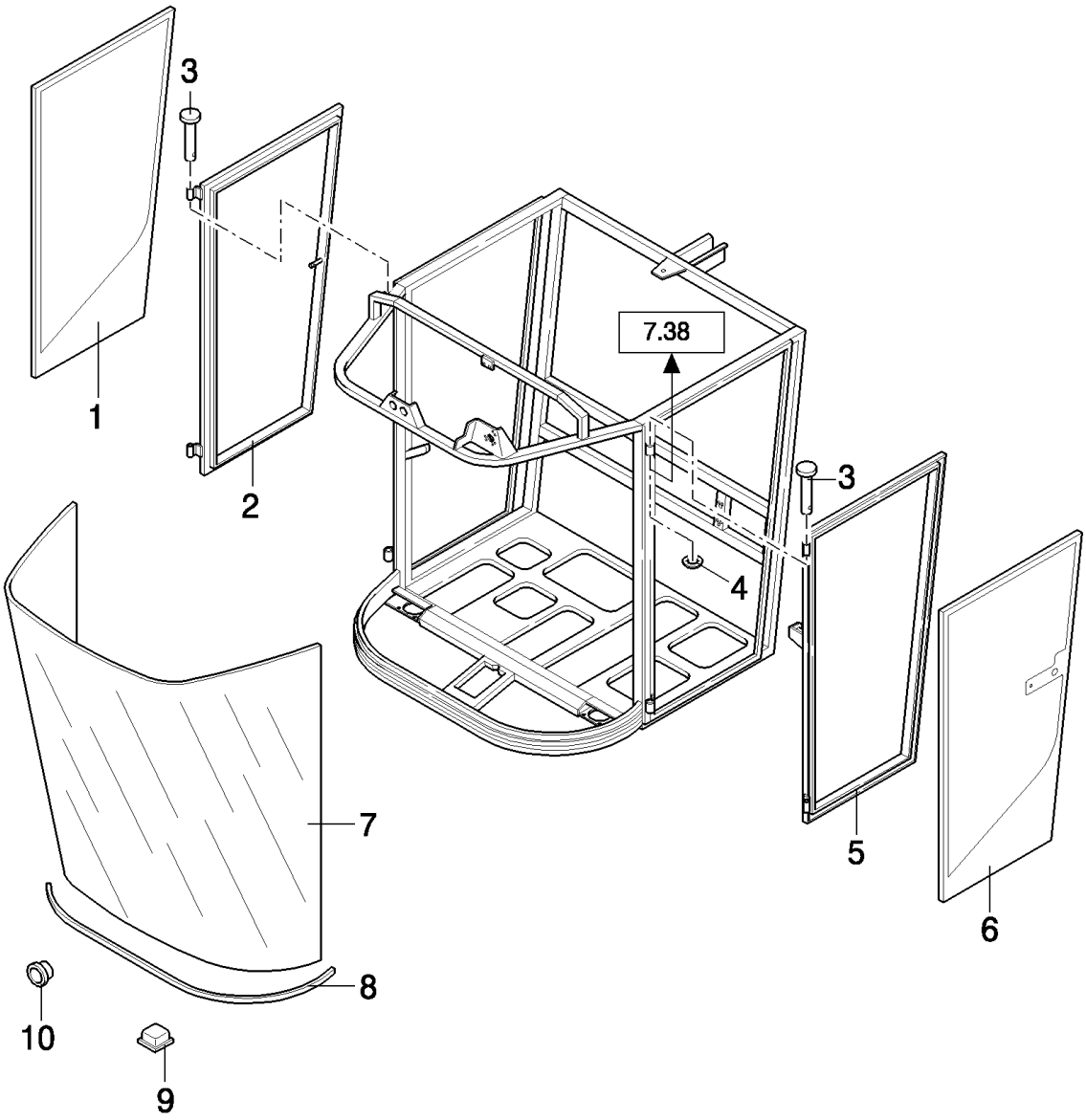

TX68 COMBINE - BASE UNIT

06.18(01) CAB WINDOW PANES

ссылка	Номер детали	Кол-во	Описание
1	740854	1	GLASS, CAB,
2	9500096	1	CAB DOOR, RH, , -C1189
2	84607346	1	CAB DOOR, RH, , D1190-
3	412607	4	PIN, , -C5530
3	412561	4	PIN, CLEVIS, , -C0065
3	84607358	4	PIN, , D1190-
4	431021	4	WASHER, SPECIAL, , -C1189
4	431021	8	WASHER, SPECIAL, , D1190-
5	9500071	1	CAB DOOR, LH, , -C4540
5	84001701	1	CAB DOOR, LH, , -C0059
5	84607347	1	CAB DOOR, LH, , D1190-
6	84001859	1	GLASS, CAB,
7	740775	1	WINDSHIELD, , BSN C407
7	84400385	1	GLASS, , ASN D408
8	9501985	AR	STRIP, RUBBER, L=10M, BSN C407
8	84458002	AR	SEAL PROTECTION, , ASN D408
9	9818501	AR	PLUG, Sq, Plastic,
10	9992359	AR	PLUG,

06.19(01) SCREEN WASHER FOR FRONT WINDOW

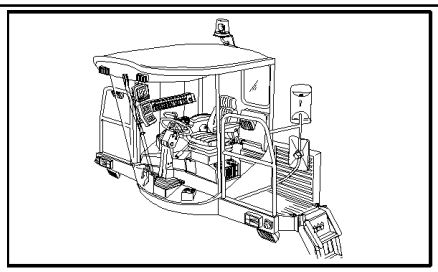

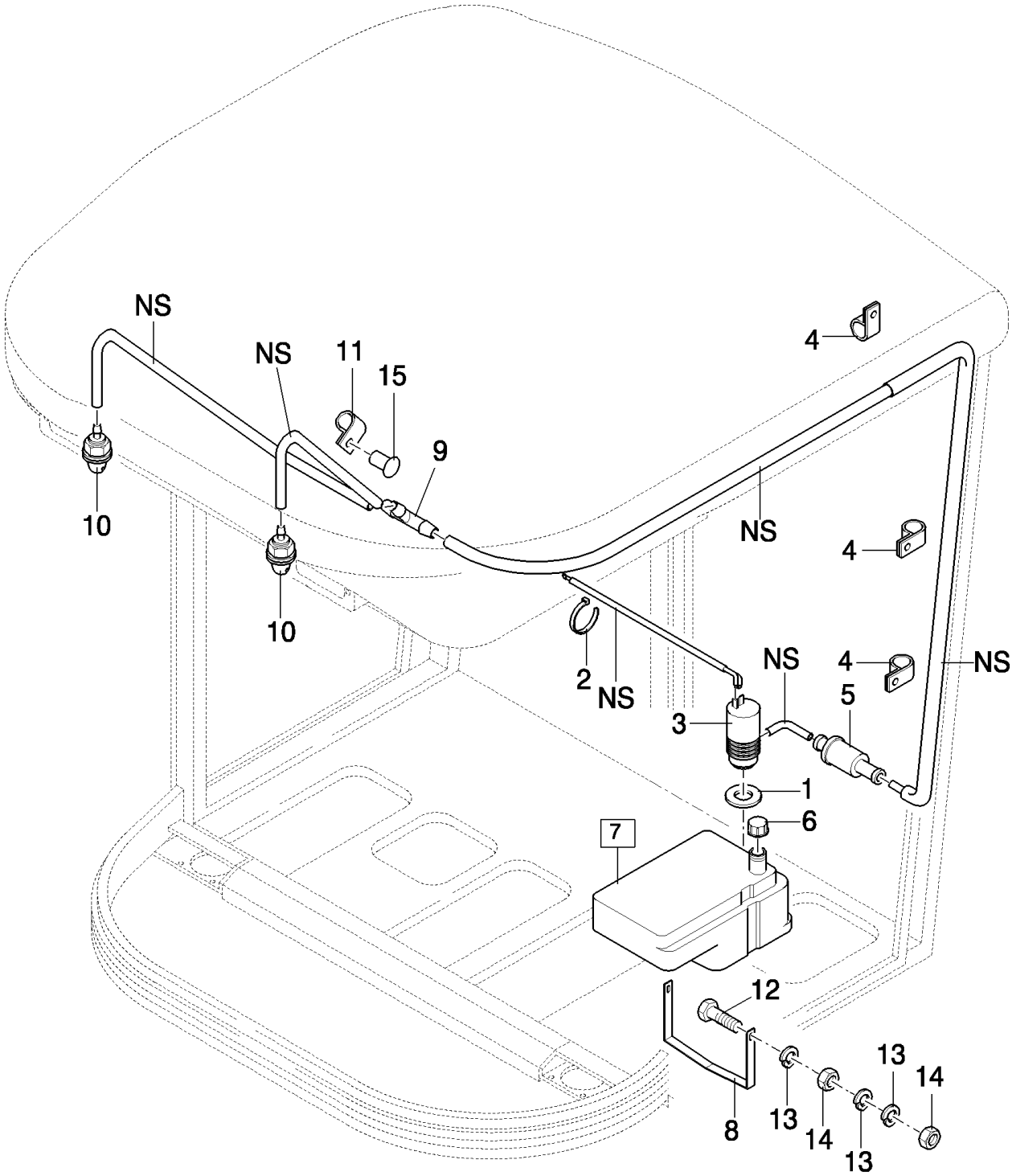

ONLY VALID FROM 4817001 (TX62) - 461033001 (TX63) - 4917001 (TX64) - 6617001 (TX65) - 5024001 (TX66) - 4404001 (TX67) - 5124001 (TX68)

TX68 COMBINE - BASE UNIT

06.19(01) SCREEN WASHER FOR FRONT WINDOW

ссылка	Номер детали	Кол-во	Описание
1	84037531	1	SEAL,
2	323597	3	STRAP, CABLE, M9 x 165 or M5 x 197,
3	84037533	1	PUMP,
4	9503930	3	CLAMP, RP16
5	84037530	1	VALVE, CHECK,
6	84041004	1	CAP,
7	84002498	1	RESERVOIR, WINDSH. WASH, (1,3,6)
8	84002499	1	CLAMP,
9	84037529	1	CONNECTION, 3 WAY,
10	84038325	2	NOZZLE, , -C7520
10	84037532	2	NOZZLE CAP, , D7520-
11	353072	2	CLAMP,
12	86977786	2	BOLT, Hex, M6 x 25, 8.8,
13	322357	6	WASHER, SPRING, Belleville, M6,
14	15896221	4	NUT, M6, Cl 10,
15	425520	2	RIVET,

ONLY VALID FROM 4817001 (TX62) - 461033001 (TX63) - 4917001 (TX64) - 6617001 (TX65) - 5024001 (TX66) - 4404001 (TX67) - 5124001 (TX68)

06.20(01) FIRE EXTINGUISHER

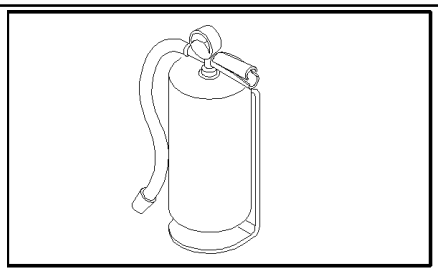

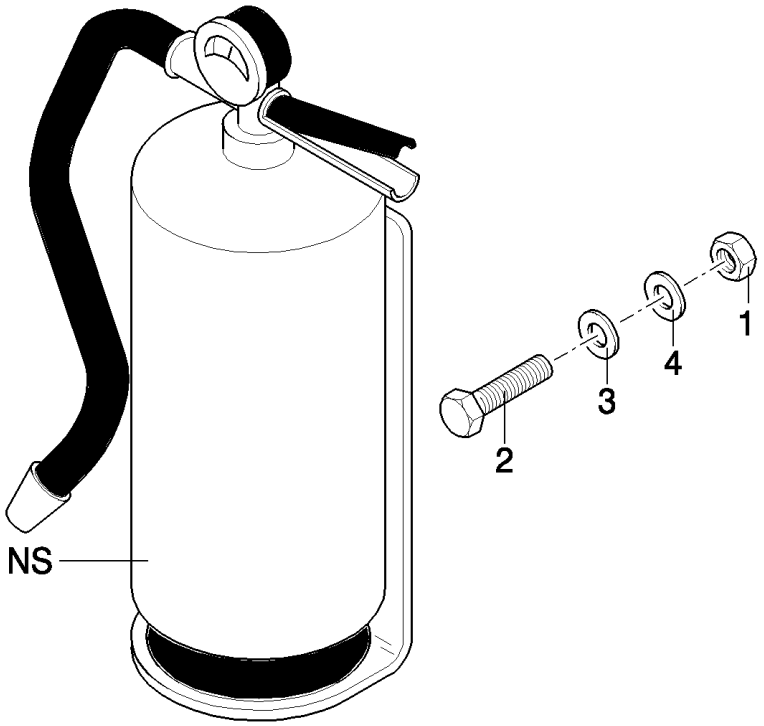

TX68 COMBINE - BASE UNIT

06.20(01) FIRE EXTINGUISHER

ссылка	Номер детали	Кол-во	Описание
1	100016	4	NUT, M10, Cl 8,
1	9706690	4	NUT, M8, Cl 8,
2	300383	4	BOLT, Hex, M10 x 16, 8.8, Full Thd,
2	120104	4	SCREW, Hex, M8 x 20, 8.8,
3	140045	4	WASHER, SPRING, Belleville, M10,
3	140016	4	WASHER, M8 x 16 x 1.6,
4	412650	4	WASHER, Belleville, M8,

06.21(01) DOOR LOCK

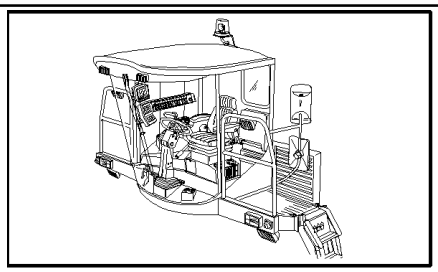

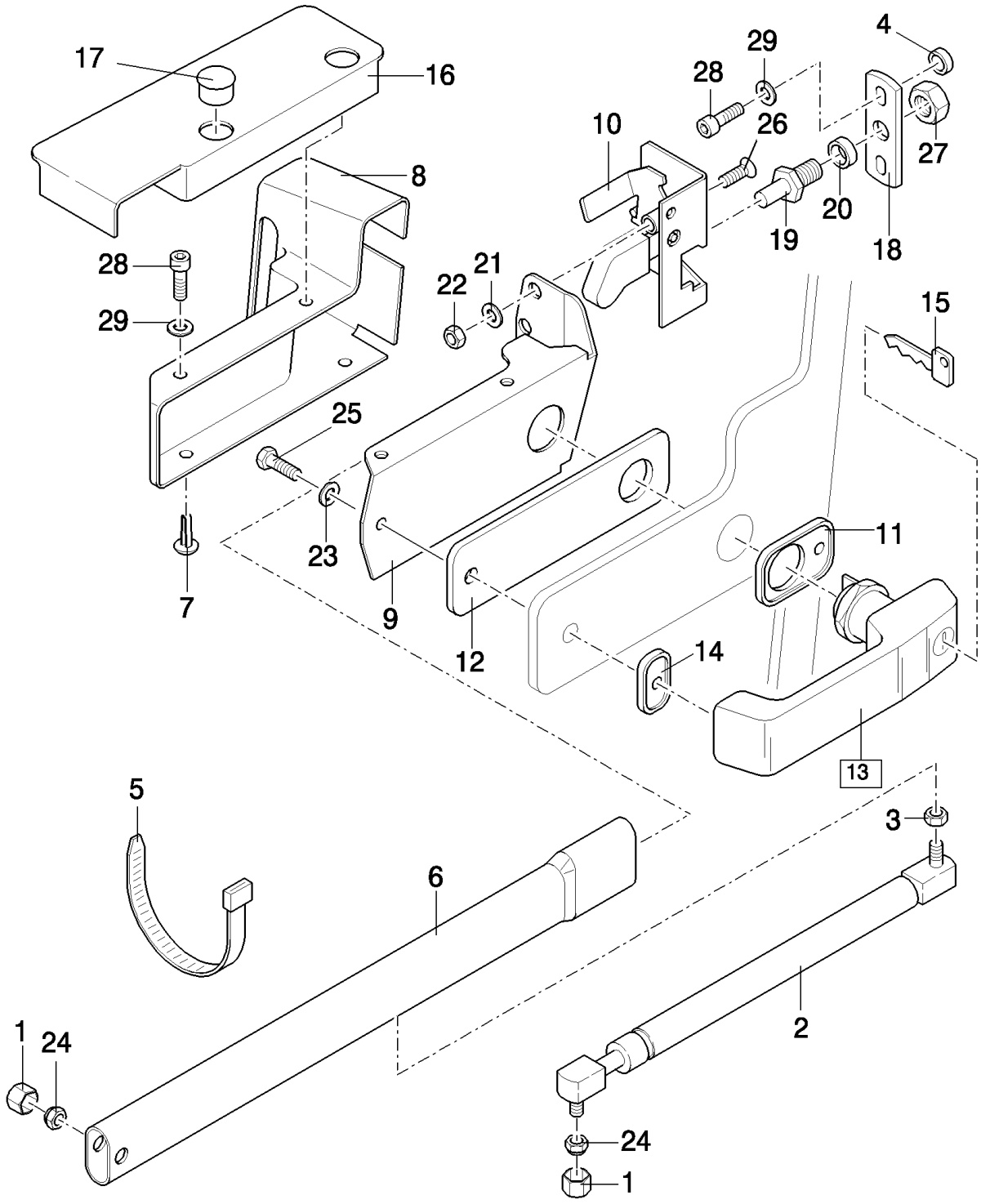

ONLY VALID UNTIL 4805999 (TX62) - 4905999 (TX64) - 6605999 (TX65) - 5009999 (TX66) - 5109999 (TX68)

TX68 COMBINE - BASE UNIT

06.21(01) DOOR LOCK

ссылка	Номер детали	Кол-во	Описание
1	458639	2	CAP, Nut, M8,
2	9812214	1	SHOCK ABSORBER,
3	E8NN16N574AA	1	NUT,
4	396606	2	BUSHING,
5	747159	1	CLAMP,
6	9812441	1	TUBE,
7	446914	2	PLUG,
8	9594290	1	COVER,
9	84001515	1	SUPPORT,
10	9817980	1	LOCK,
11	9513968	1	GASKET,
12	9593403	1	GASKET,
13	9513970	1	HANDLE, (15)
14	9513969	1	GASKET,
15	E8NN9422053AA	1	KEY, DOOR LOCK, CODE 1008
15	84032451	1	KEY, DOOR LOCK, CODE 0201
16	84001481	1	SUPPORT,
17	84014802	2	PLUG, Dome, .750" hole, Nylon,
18	9812327	2	BRACKET,
19	9594675	1	STOP,
20	750159	1	BUSHING,
21	322358	2	WASHER, SPRING, Belleville, M8,
22	9706690	2	NUT, M8, Cl 8,
23	322357	1	WASHER, SPRING, Belleville, M6,
24	86629542	2	NUT, LOCK, M8 x 1.25, Cl 8,
25	120101	1	BOLT, Hex, M6 x 30, 8.8, Full Thd,
26	300352	2	SCREW, Hex Flat Hd, M8 x 40, 4.8,
27	9818861	1	NUT, M12 x 1, Cl 8, M12
28	84007540	4	SCREW,
29	84007539	4	WASHER,

ONLY VALID UNTIL 4805999 (TX62) - 4905999 (TX64) - 6605999 (TX65) - 5009999 (TX66) - 5109999 (TX68)

06.22(01) DOOR LOCK

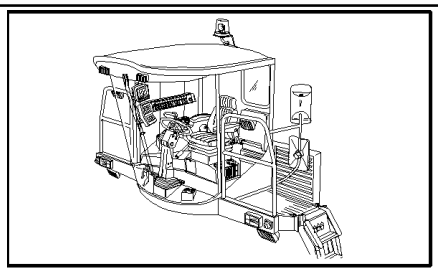

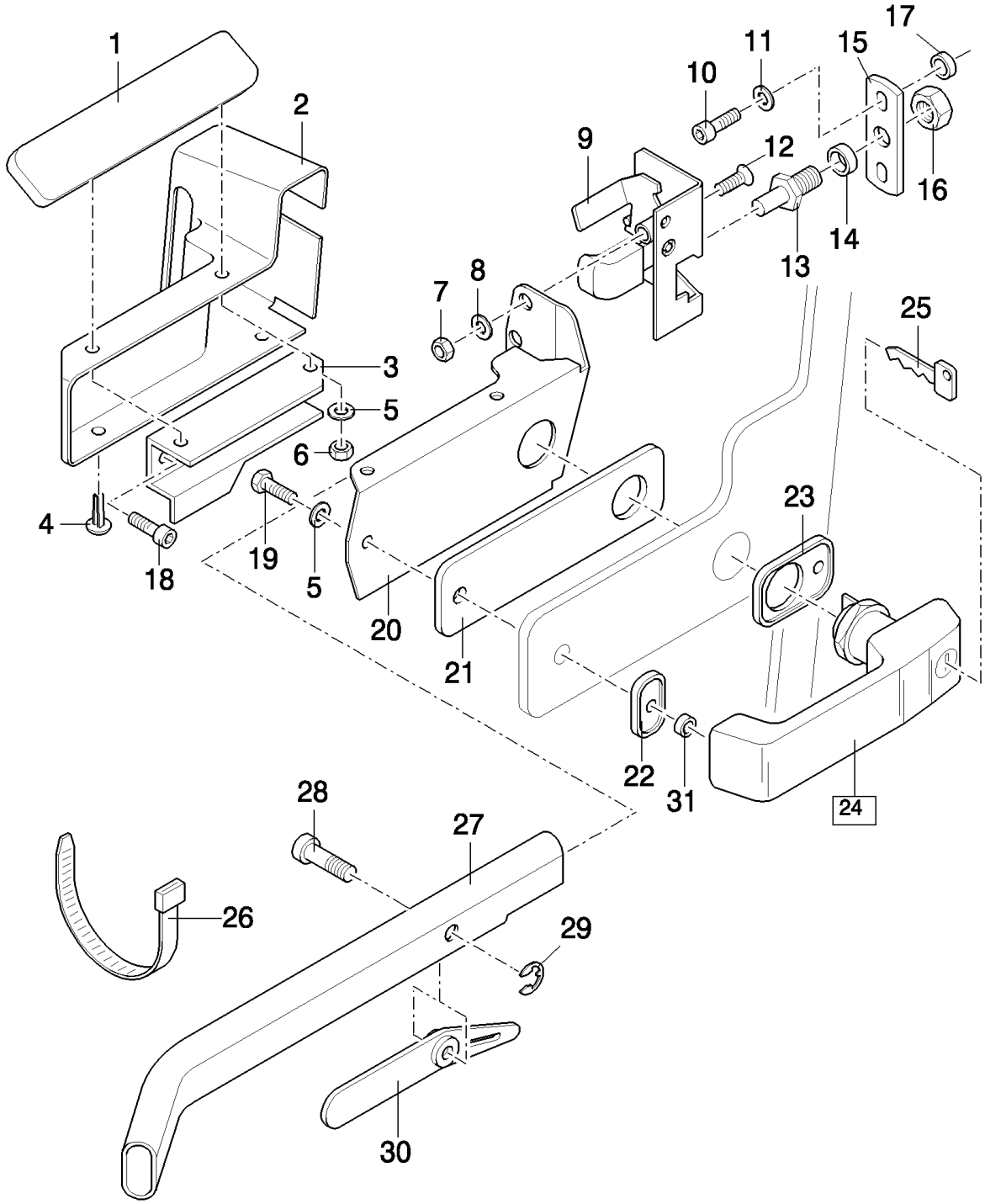

ONLY VALID FROM 4806001 (TX62) - 461033001 (TX63) - 4906001 (TX64) - 6606001 (TX65) - 5010001 (TX66) - 4404001 (TX67) - 5110001 (TX68)

TX68 COMBINE - BASE UNIT

06.22(01) DOOR LOCK

ссылка	Номер детали	Кол-во	Описание
1	84001710	1	PLATE,
2	9594290	1	COVER,
3	84001709	1	SUPPORT,
4	446914	2	PLUG,
5	322357	3	WASHER, SPRING, Belleville, M6,
6	15896221	2	NUT, M6, Cl 10,
7	9706690	2	NUT, M8, Cl 8,
8	322358	2	WASHER, SPRING, Belleville, M8,
9	9817980	1	LOCK,
10	84007540	2	SCREW,
11	84007539	2	WASHER,
12	300352	2	SCREW, Hex Flat Hd, M8 x 40, 4.8,
13	9594675	1	STOP,
14	750159	1	BUSHING, , -C5530
15	9812327	2	BRACKET,
16	9818861	1	NUT, M12 x 1, Cl 8, M12
17	396606	2	BUSHING,
18	380426	2	SCREW,
19	120101	1	BOLT, Hex, M6 x 30, 8.8, Full Thd,
20	84001515	1	SUPPORT,
21	9593403	1	GASKET,
22	9513969	1	GASKET,
23	9513968	1	GASKET,
24	9513970	1	HANDLE, (25)
25	E8NN9422053AA	1	KEY, DOOR LOCK, CODE 1008
25	84032451	1	KEY, DOOR LOCK, CODE 201
26	747159	1	CLAMP,
27	84001707	1	TUBE,
28	84001708	1	PIN,
29	E663210S71	1	CIRCLIP,
30	84001706	1	LEVER,
31	264036	1	BUSHING, , D5420-

ONLY VALID FROM 4806001 (TX62) - 461033001 (TX63) - 4906001 (TX64) - 6606001 (TX65) - 5010001 (TX66) - 4404001 (TX67) - 5110001 (TX68)

06.23(01) DOOR LOCK EMERGENCY EXIT

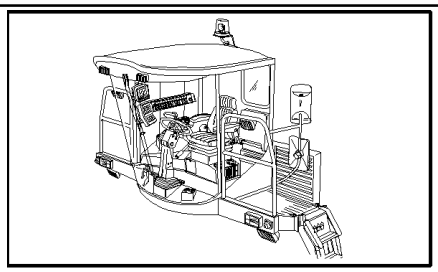

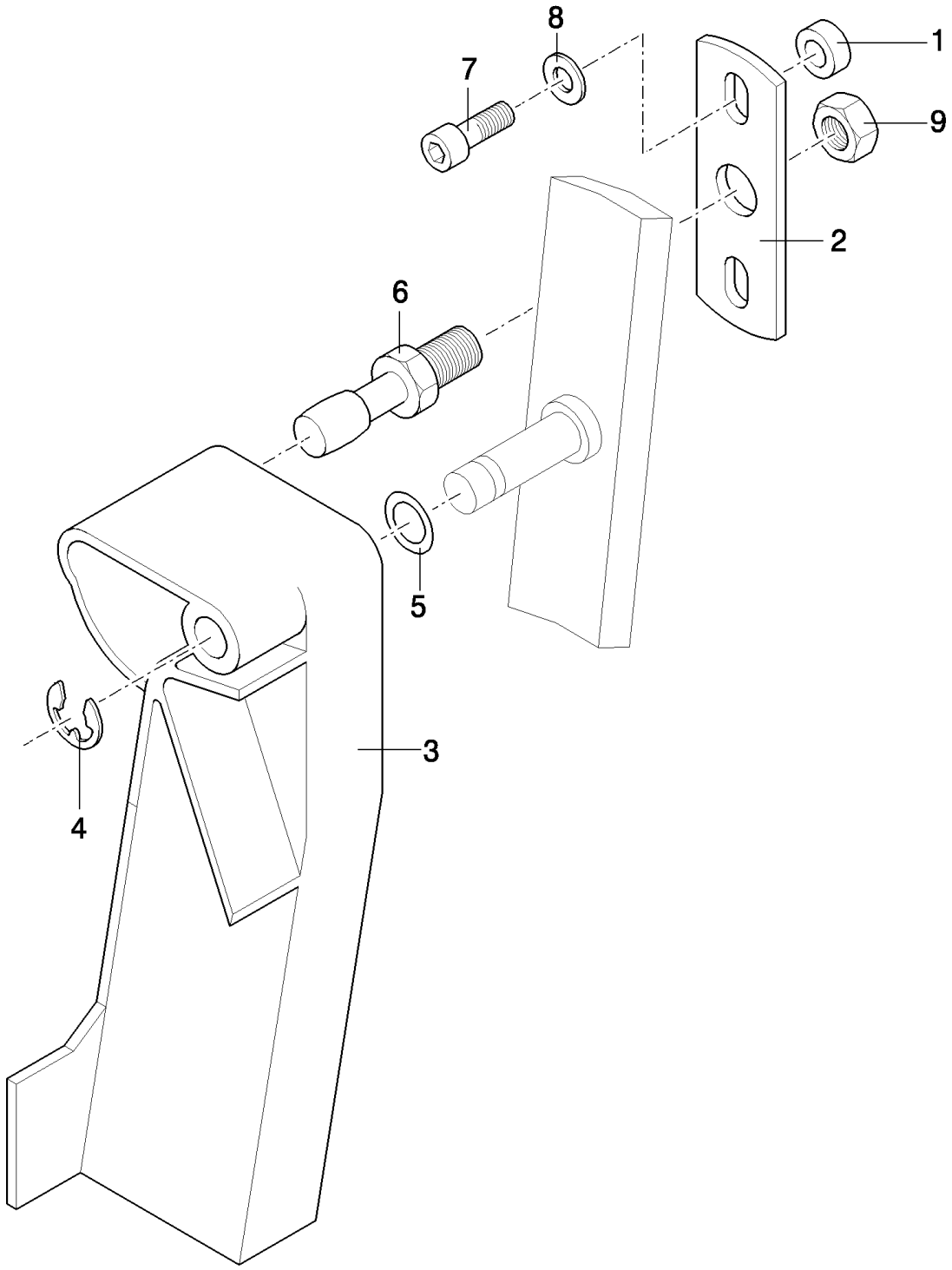

TX68 COMBINE - BASE UNIT

06.23(01) DOOR LOCK EMERGENCY EXIT

ссылка	Номер детали	Кол-во	Описание
1	396606	2	BUSHING,
2	9812327	1	BRACKET,
3	83992586	1	HANDLE,
4	E663210S71	1	CIRCLIP,
5	236535	1	O-RING, -110, 90 Duro, .362" ID x .103" Thk,
6	E7NN94296N05AC	1	PIN, SPLIT (COTTER),
7	84007540	2	SCREW,
8	84007539	2	WASHER,
9	100016	1	NUT, M10, Cl 8,

06.24(01) CAB ROOF

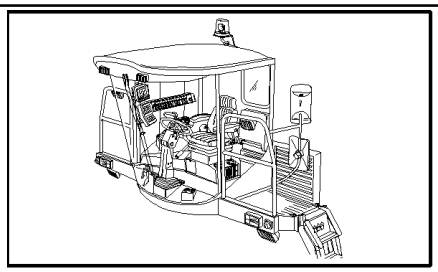

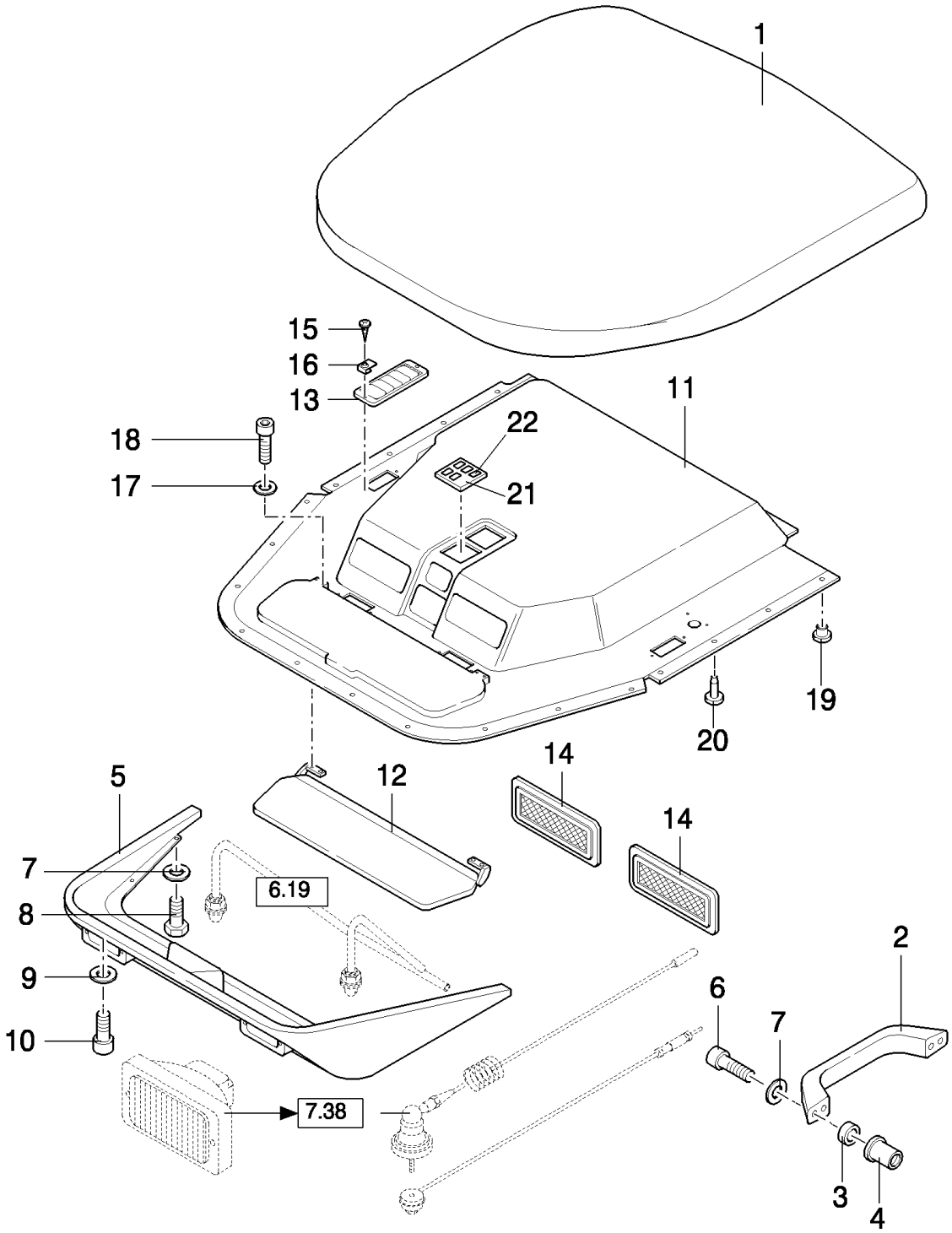

TX68 COMBINE - BASE UNIT

06.24(01) CAB ROOF

ссылка	Номер детали	Кол-во	Описание
1	9501572	1	ROOF, , -C7520
1	84035353	1	ROOF, , ANTENNE ALSO INCLUDED, -C0058
1	84429743	1	ROOF, , ANTENNE ALSO INCLUDED, D1170-
2	9500185	1	HANDLE GRIP,
3	396606	2	BUSHING,
4	353068	2	NUT,
5	9507659	1	COVER, , INCLUDED WITH REF.1 FROM D7520 ONWARDS, -C7520
6	86511831	2	SCREW, Cross Pan Hd, M6 x 25,
7	322357	6	WASHER, SPRING, Belleville, M6,
8	80120099	4	BOLT, Hex, M6 x 16, 8.8,
9	84007539	2	WASHER,
10	84007540	2	SCREW,
11	9500149	1	COVER, , -C5500
11	84002351	1	SOFT TRIM, , -C0007
11	84002950	1	SOFT TRIM, , -C0061
11	84429899	1	SOFT TRIM, , D1164-
12	9500213	1	SUN VISOR,
13	9504600	6	GRILLE,
14	F1NN9404587AA	2	PLATE,
15	9835804	AR	SCREW,
16	84005699	AR	CLIP,
17	322355	4	WASHER, Belleville, M4,
18	86511042	4	SCREW, Cross Pan Hd, M4 x 16,
19	84014802	1	PLUG, Dome, .750" hole, Nylon,
20	84000834	18	PLUG,
21	84002869	1	PLATE, COVER,
22	9504368	5	PLUG,

06.25(01) CAB - SOUNDPROOFING

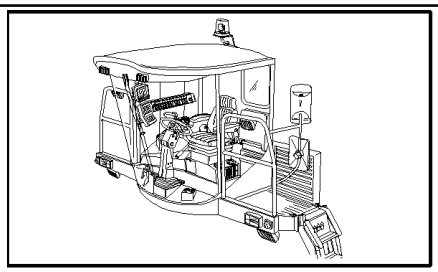

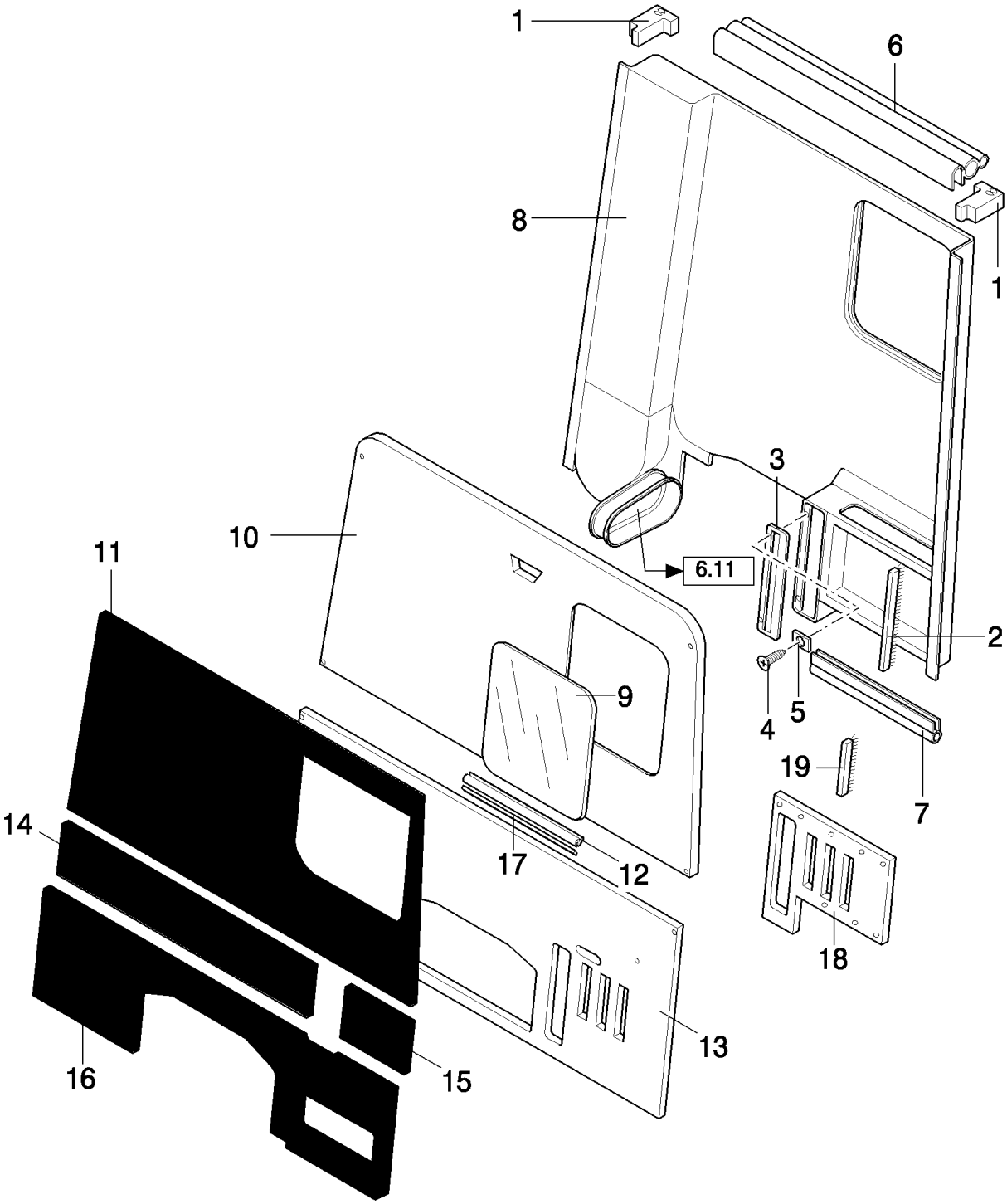

TX68 COMBINE - BASE UNIT

06.25(01) CAB - SOUNDPROOFING

ссылка	Номер детали	Кол-во	Описание
1	84001290	2	ELEMENT, SEALING, , -C5530
2	9812255	AR	BRUSH,
3	9812256	1	PLATE, COVER, , FOR TX64-65-66-68 ONLY, -C4620
3	84001464	1	PLATE, COVER, , FOR TX64-65-66-68 ONLY, D4620-
3	84001464	1	PLATE, COVER, , FOR TX62-63 ONLY
4	9514970	AR	SCREW,
5	84005699	AR	CLIP,
6	84014499	AR	ELEMENT, SEALING, L:5000MM
7	9838333	AR	ELEMENT, SEALING, L=4000MM
8	9505280	1	SOFT TRIM, , FOR TX63 WITH REMOTE CONTROL, FOR TX64-65-66-68 ONLY
8	84001315	1	SOFT TRIM, , FOR TX62-63 ONLY
8	84035305	1	SOFT TRIM, , FOR TX67 ONLY
9	918376	1	GLASS,
10	9500079	1	PLATE,
11	84001241	1	SOFT TRIM, , -C5500
12	84014503	AR	ELEMENT, SEALING, L:1800MM
13	84001037	1	PLATE, COVER, , FOR TX66-68 ONLY, -C4620
13	89812633	1	PLATE, COVER, , FOR TX66-68 ONLY, -C0008
13	89812633	1	PLATE, COVER, , FOR TX64-65 ONLY, -C5500
13	84001616	1	PLATE, COVER, , FOR TX64-65-66-68 ONLY, FOR TX63 WITH REMOTE CONTROL, D5500-
13	89500057	1	PLATE, COVER, , FOR TX62-63 ONLY, -C5500
13	84002350	1	PLATE, COVER, , FOR TX62-63 ONLY, D5500-
13	84035302	1	PLATE, COVER, , FOR TX67 ONLY
14	84001242	1	SOFT TRIM, , -C5500
15	84001243	1	SOFT TRIM, , -C5500
16	84001244	1	SOFT TRIM, , FOR TX64-65-66-68 ONLY, -C5500
16	84001369	1	SOFT TRIM, , FOR TX62-63 ONLY, -C5500
17	401211	AR	SEAL PROTECTION,
18	89812828	1	PLATE, COVER, , FOR TX62-63 ONLY
19	89515169	6	BRUSH, , FOR TX62-63 ONLY

06.26(01) CAB FLOOR

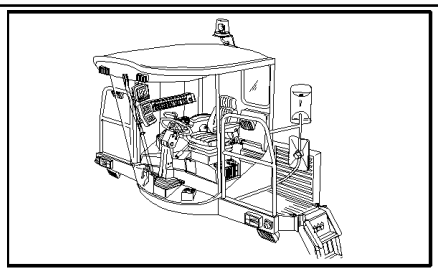

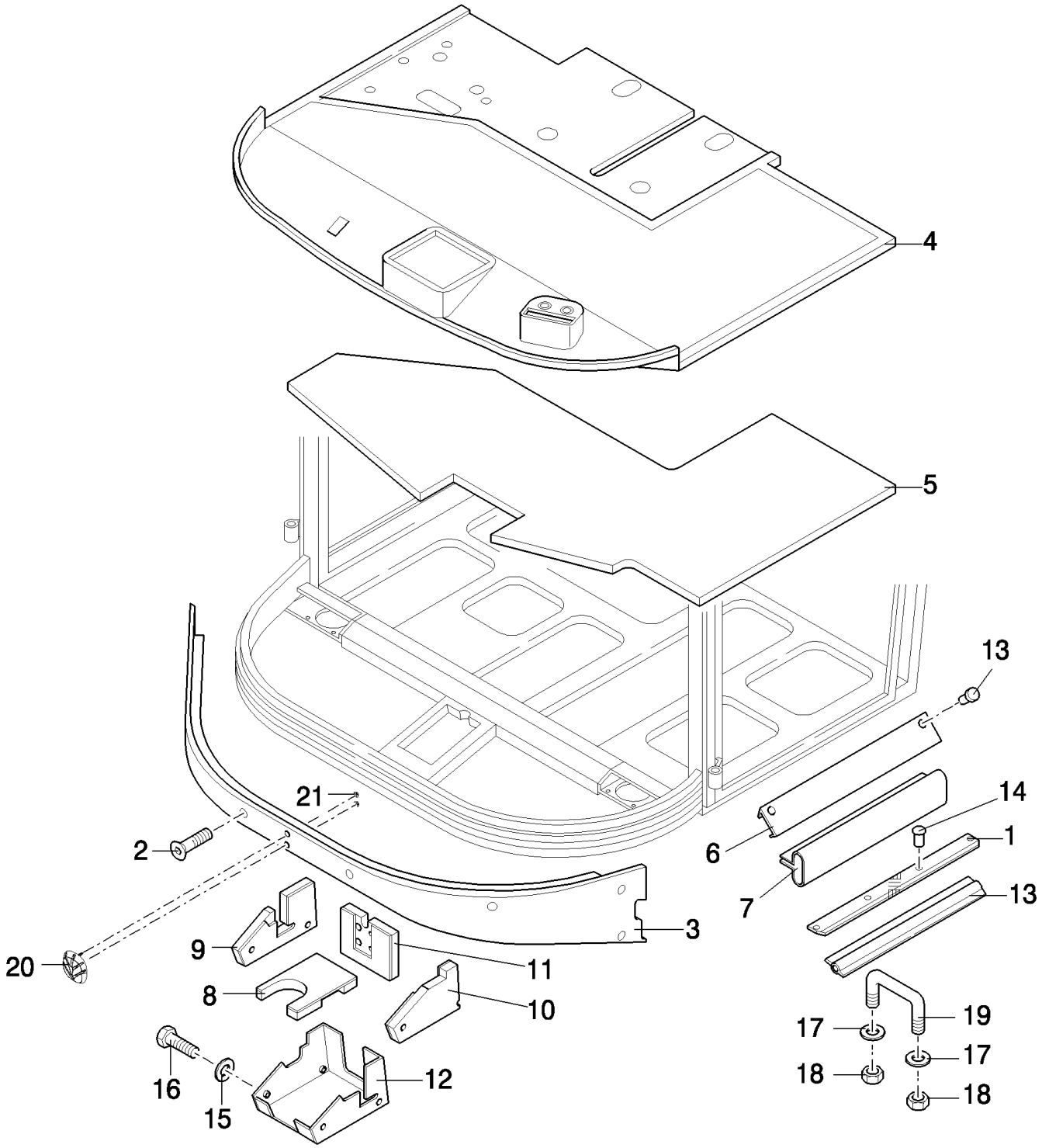

TX68 COMBINE - BASE UNIT

06.26(01) CAB FLOOR

ссылка	Номер детали	Кол-во	Описание
1	84001240	1	PLATE, COVER,
2	84007083	8	SCREW,
3	9500643	1	COVER, , -C1169
3	84429740	1	COVER, , BSN F1170
3	84800879	1	SHIELD, , ASN D408
4	84001508	1	MAT, Mat, FOR TX62-64-65-66-68 ONLY, -C5500
4	84035319	1	MAT, , FOR TX67 ONLY
4	84002530	1	MAT, , FOR TX62-63-64-65-66-68 ONLY, D5500-
5	84001569	1	PLATE,
6	84002922	1	PLATE, COVER,
7	84014500	1	ELEMENT, SEALING, L:4500MM
8	84011276	1	SOFT TRIM,
9	84011277	1	SOFT TRIM,
10	84011278	1	SOFT TRIM,
11	84011279	1	SOFT TRIM,
12	84015542	1	COVER,
13	331233	2	PLUG,
14	425520	4	RIVET,
15	322357	4	WASHER, SPRING, Belleville, M6,
16	80120099	AR	BOLT, Hex, M6 x 16, 8.8,
17	322358	2	WASHER, SPRING, Belleville, M8,
18	9706690	2	NUT, M8, Cl 8,
19	84014562	1	SUPPORT,
20	47128460	1	EMBLEM, , ASN D408
21	14227876	3	NUT, M4, Push, , ASN D408

06.27(01) ARM REST, RH

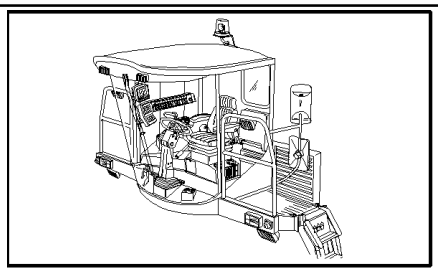

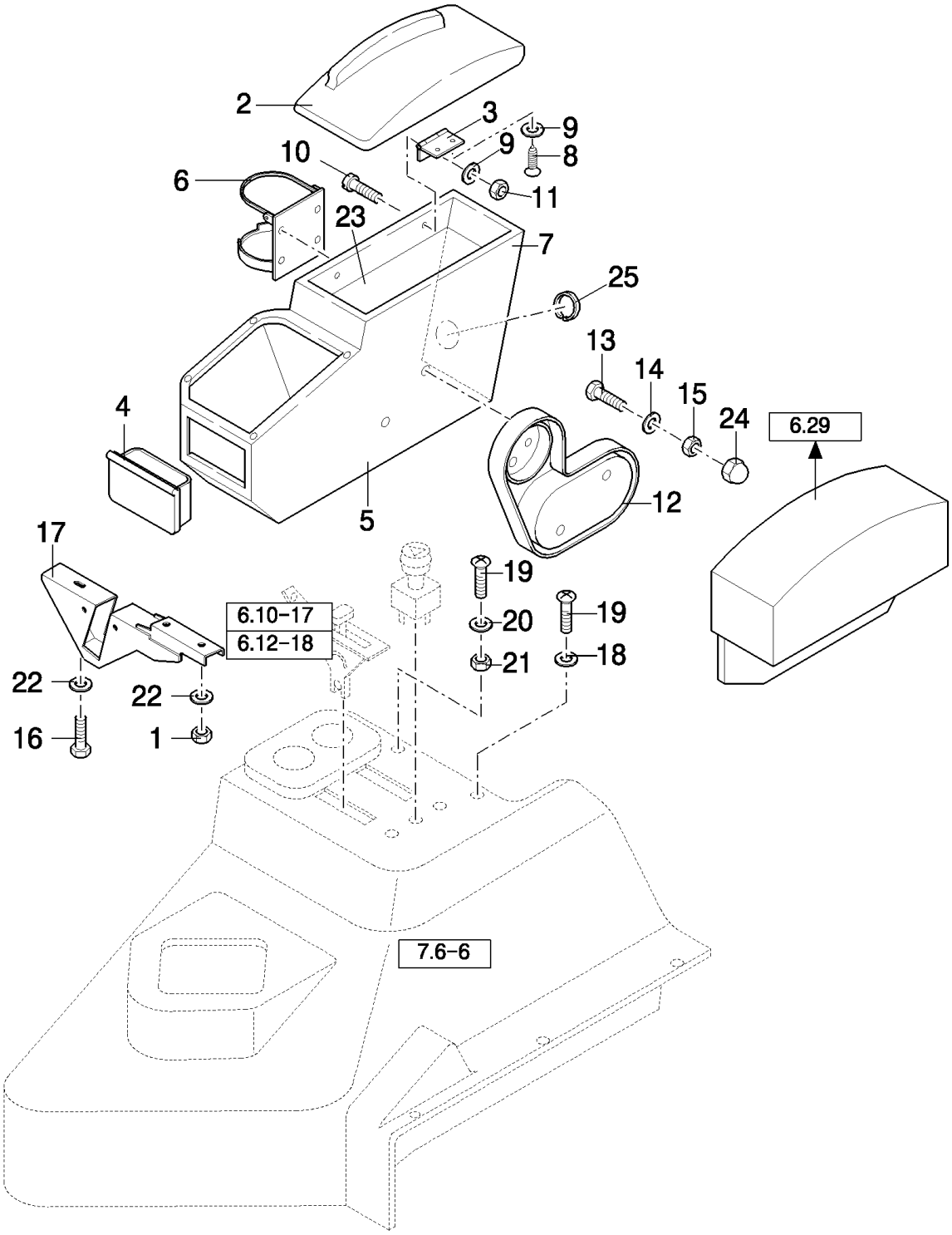

TX68 COMBINE - BASE UNIT

06.27(01) ARM REST, RH

ссылка	Номер детали	Кол-во	Описание
1	9706690	3	NUT, M8, Cl 8,
2	9831167	2	ARMREST,
3	9831042	2	HINGE,
4	E7NN94048N05AA	1	ASH TRAY,
5	9831404	1	CASE, , FOR TX62-63-64-65-66-68 ONLY
5	84038336	1	CASE, , FOR TX67 ONLY
6	9819041	1	CLAMP,
7	9831564	1	SOFT TRIM,
8	412684	4	SCREW,
9	322357	6	WASHER, SPRING, Belleville, M6,
10	412491	2	SCREW, M6x16
11	15896221	2	NUT, M6, Cl 10,
12	9831401	1	COVER,
13	43138	2	SCREW, Hex, M10 x 20, 8.8, Full Thd,
14	140045	2	WASHER, SPRING, Belleville, M10,
15	100016	2	NUT, M10, Cl 8,
17	9831402	1	SUPPORT, , FOR TX62-63-64-65-66-68 ONLY
17	84038410	1	SUPPORT, , FOR TX67 ONLY
18	448889	2	WASHER,
19	412475	4	SCREW,
20	322355	2	WASHER, Belleville, M4,
21	100012	2	NUT, M4, Cl 8,
22	322358	3	WASHER, SPRING, Belleville, M8,
23	84001403	1	PLATE,
24	747886	1	NUT, M10
25	401266	1	STRIP-GASKET,
16	16043224	1	BOLT, Hex, M8 x 16, 8.8, Full Thd,

06.28(01) SEAT

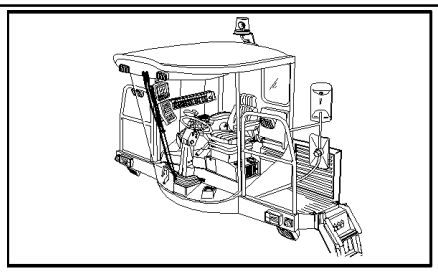

SAFETY BELT

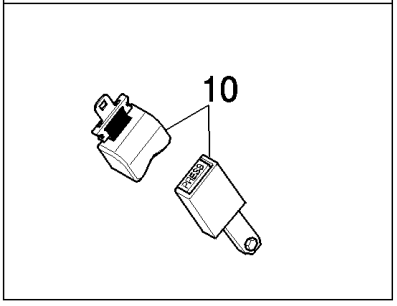

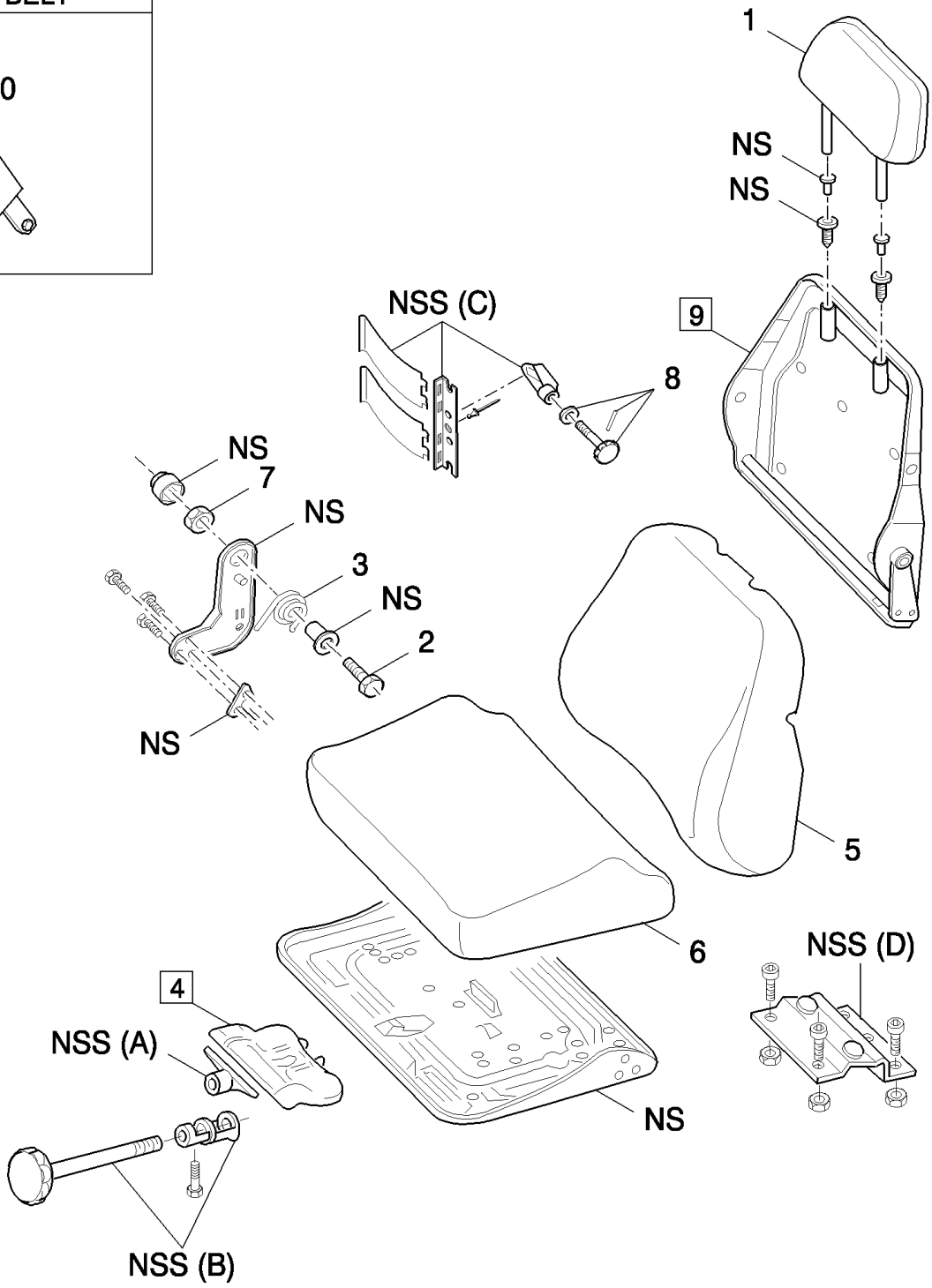

TX68 COMBINE - BASE UNIT

06.28(01) SEAT

ссылка	Номер детали	Кол-во	Описание
	9817955	1	SEAT, DRIVER, STANDARD (6.28 to 6.31)
	9513129	1	SEAT, DRIVER, AIR SUSPENDED (6.28,6.29,6.32)
1	84021181	1	HEADREST, SEAT, , AIR SUSPENDED SEAT
2	80412502	1	BOLT,
3	84021190	1	SPRING,
4	84021182	1	PAD, ADJUSTING, (A,B)
5	84021183	1	CUSHION, SEAT, , STANDARD SEAT
5	84021184	1	CUSHION, SEAT, , AIR SUSPENDED SEAT
6	84021185	1	CUSHION, SEAT, , STANDARD SEAT
6	84021186	1	CUSHION, SEAT, , AIR SUSPENDED SEAT
7	86629542	1	NUT, LOCK, M8 x 1.25, Cl 8,
8	84021188	1	SCREW,
9	84021187	1	SUPPORT, (C,D), STANDARD SEAT
9	84021189	1	SUPPORT, (C,D), AIR SUSPENDED SEAT
10	84429853	1	SEAT BELT,

06.29(01) SEAT

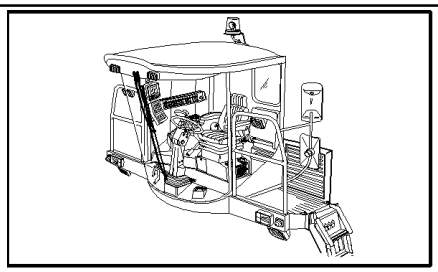

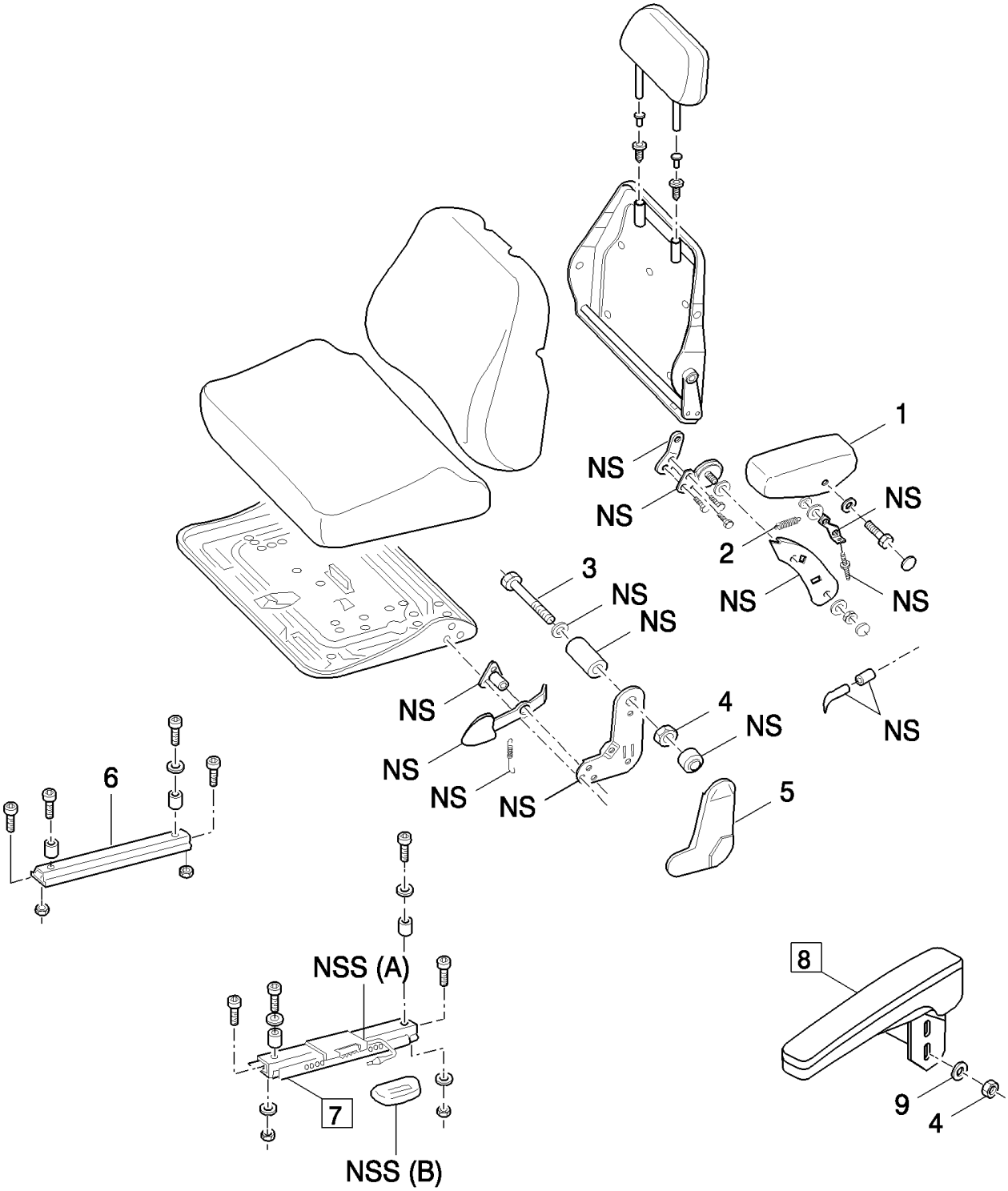

TX68 COMBINE - BASE UNIT

06.29(01) SEAT

ссылка	Номер детали	Кол-во	Описание
1	84000906	1	ARMREST, , FOR TX64-65-66-68 ONLY, -C4540
2	918232	1	SPRING, , FOR TX64-65-66-68 ONLY, -C4540
3	80412502	1	BOLT,
4	86629542	3	NUT, LOCK, M8 x 1.25, Cl 8,
5	84005802	1	COVER, PLASTIC
6	84021191	1	PROFILE,
7	84021195	1	PROFILE, (A,B)
8	84017114	1	ARMREST, (4,9), FOR TX63-64-65-66-67-68 ONLY, D4540-
9	412228	2	WASHER, , FOR TX63-64-65-66-68 ONLY, D4540-

06.30(01) STANDARD SEAT

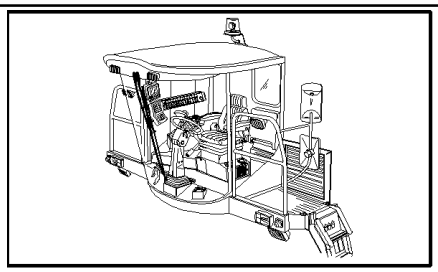

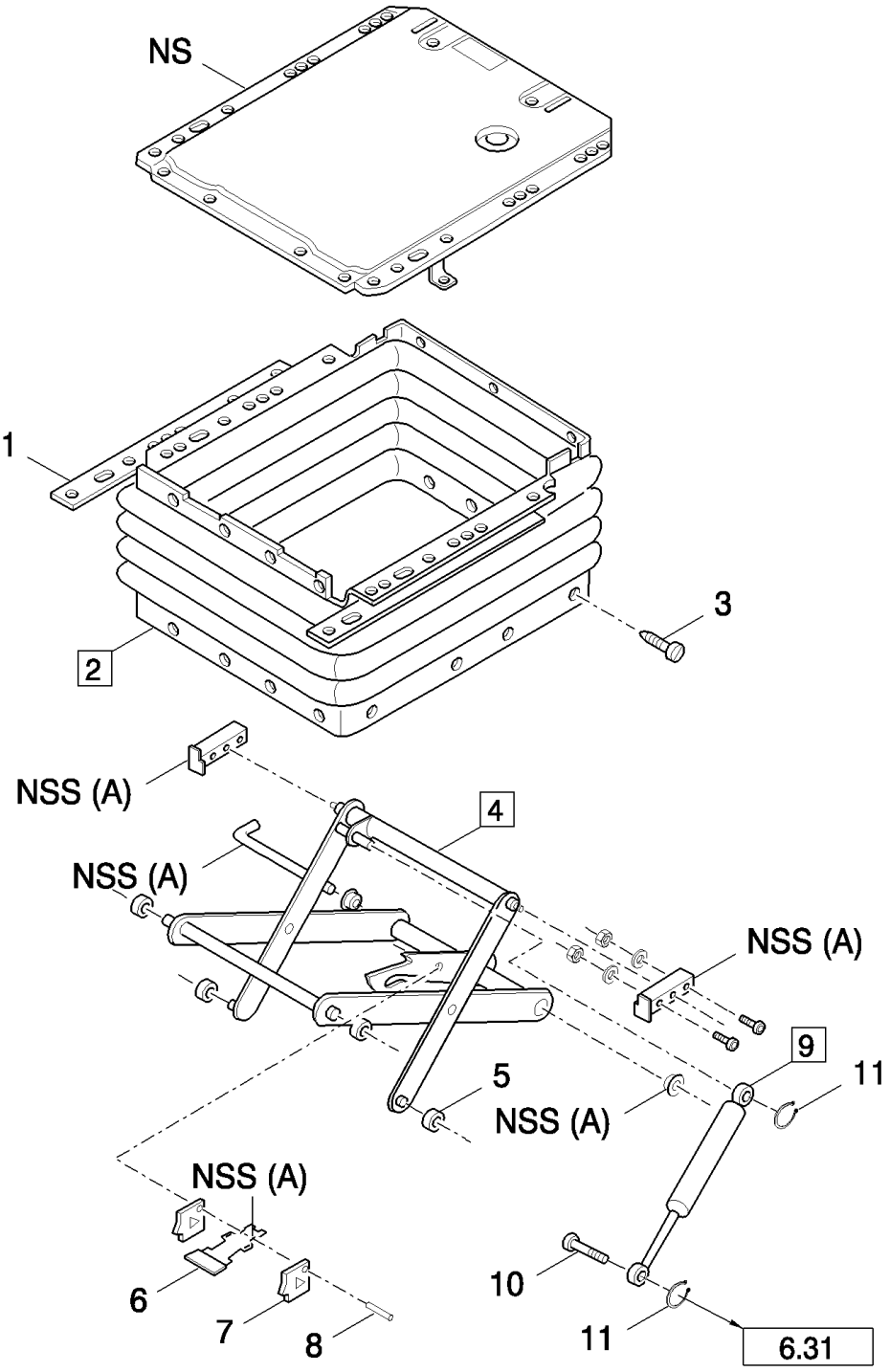

TX68 COMBINE - BASE UNIT

06.30(01) STANDARD SEAT

ссылка	Номер детали	Кол-во	Описание
1	446927	2	PLATE,
2	84021192	1	BELLOWS, (1,3)
3	446914	22	PLUG,
4	84021193	1	ADJUSTER, (5 to 8,A)
5	446921	4	ROLLER,
6	446924	1	PLATE,
7	446922	2	PLATE,
8	446925	1	SHAFT,
9	84021196	1	DAMPER, (10,11)
10	412515	1	BOLT,
11	412516	2	CIRCLIP,

06.31(01) STANDARD SEAT

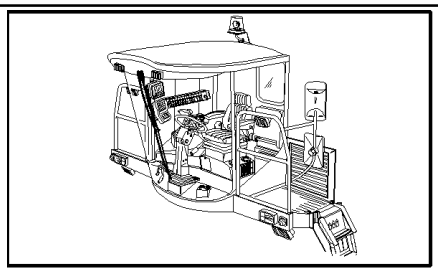

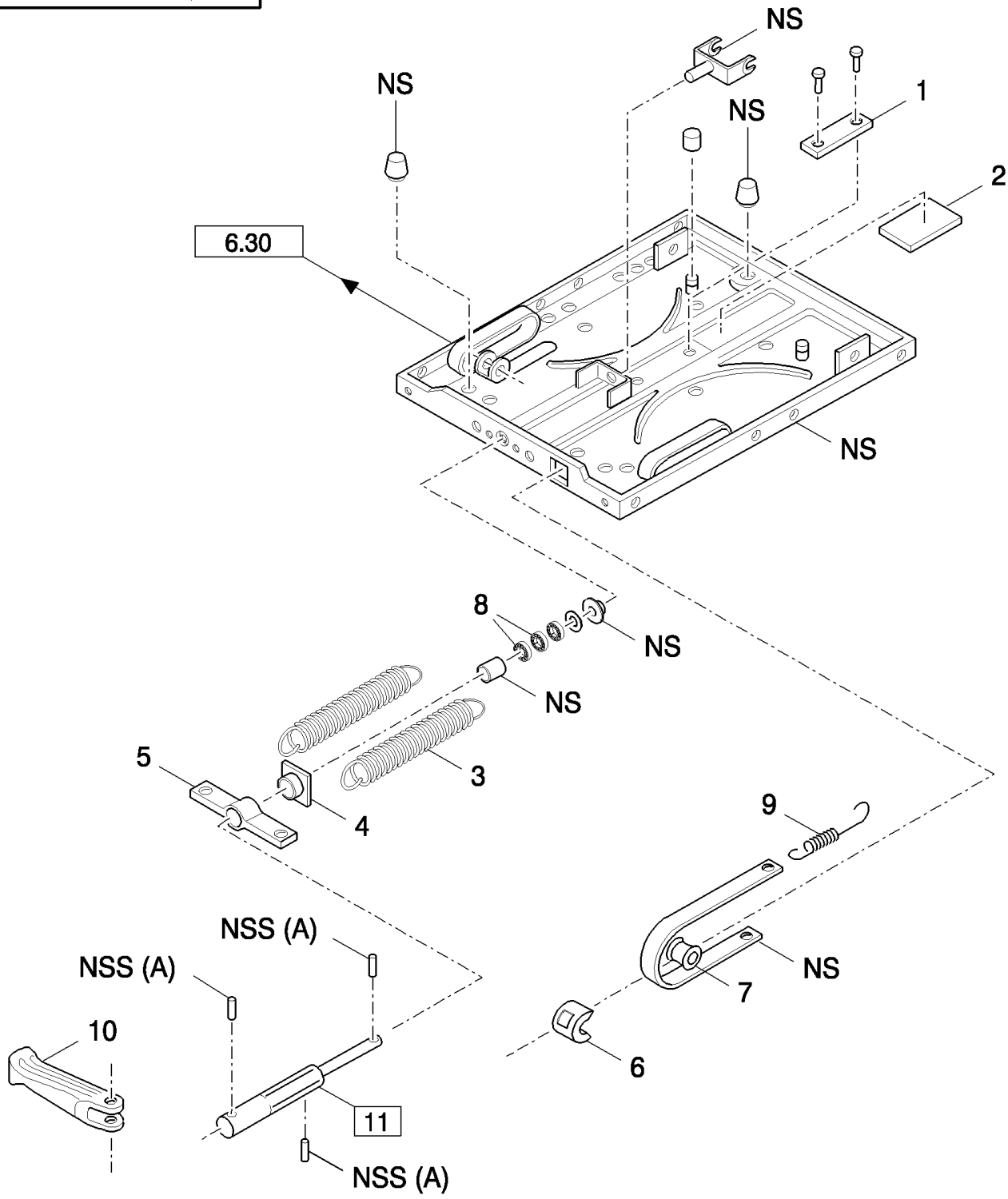

TX68 COMBINE - BASE UNIT

06.31(01) STANDARD SEAT

ссылка	Номер детали	Кол-во	Описание
1	446931	1	PLATE,
2	446932	1	PLATE,
3	84021197	2	SPRING,
4	412520	1	COLLAR,
5	446942	1	BRACKET,
6	446935	1	CAP,
7	446936	1	ROLLER,
8	446943	1	BEARING ASSY,
9	446937	1	SPRING,
10	84021198	1	HANDLE,
11	84021199	1	SCREW, (10,A)

06.32(01) AIR SUSPENDED SEAT

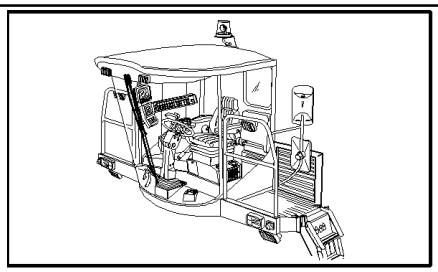

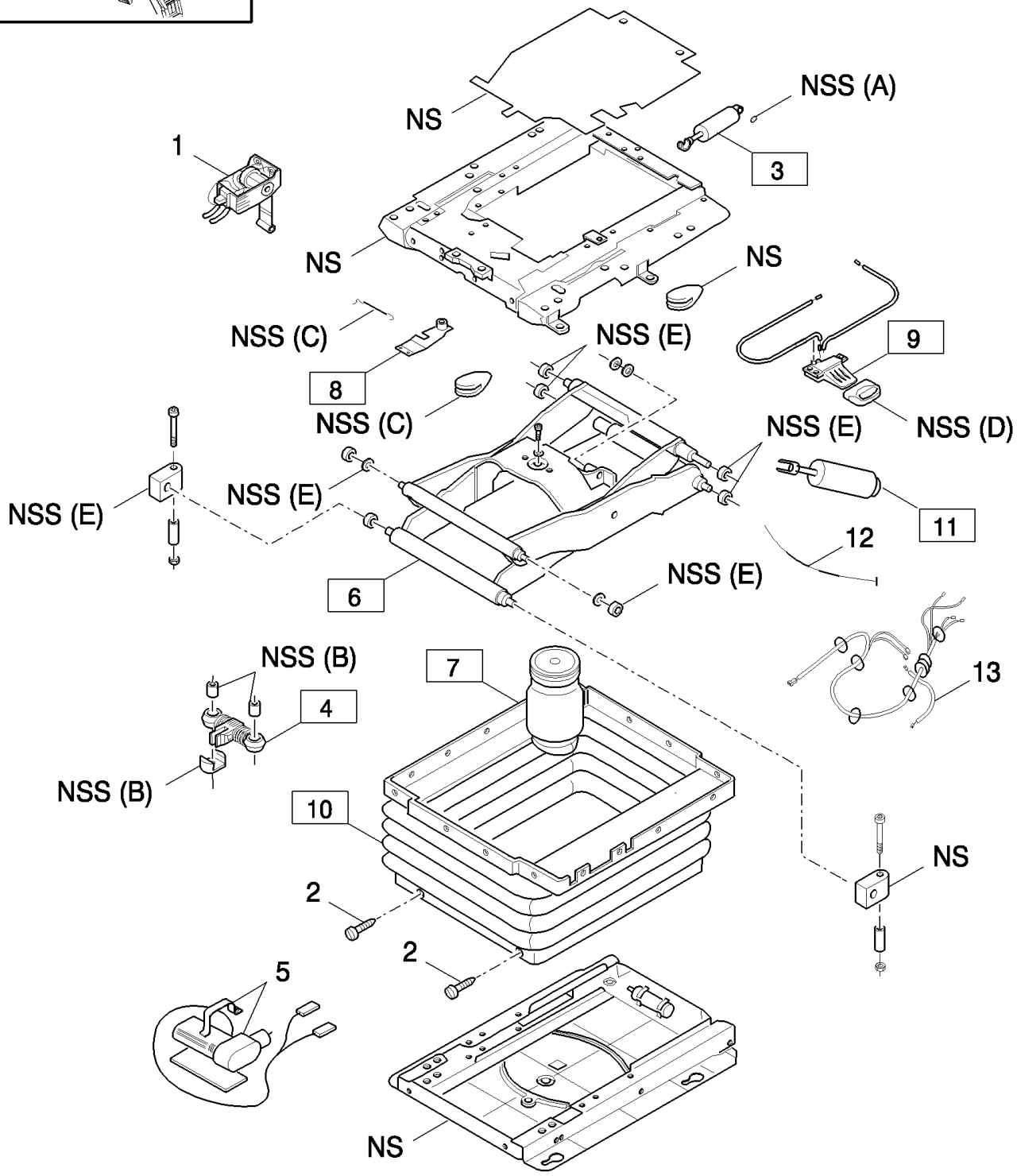

TX68 COMBINE - BASE UNIT

06.32(01) AIR SUSPENDED SEAT

ссылка	Номер детали	Кол-во	Описание
1	84021200	1	ADJUSTER, , INCL. HARDWARE
2	446914	24	PLUG,
3	84021202	1	DAMPER, (2,A)
4	84021203	1	PLATE, (2,B), INCL. HARDWARE
5	84021210	1	COMPRESSOR, AIR, (2), INCL. HARDWARE
6	84021211	1	ADAPTER, (2,E), INCL. HARDWARE
7	84021209	1	COMPRESSOR, SPRING, (2), INCL. HARDWARE
8	84021204	1	PLATE, (C), INCL. HARDWARE
9	84021205	1	ADJUSTER, (2,D), INCL. HARDWARE
10	84021212	1	BELLOWS, (2)
11	84021206	1	DAMPER, (2), INCL. HARDWARE
12	84021207	1	CABLE, , INCL. HARDWARE
13	84021208	1	CABLE, , INCL. HARDWARE

06.33(01) BUDDY SEAT

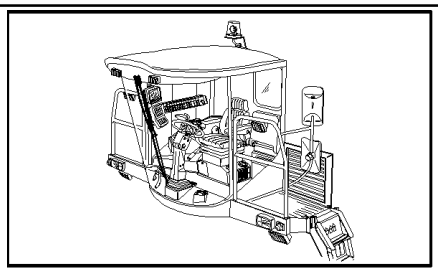

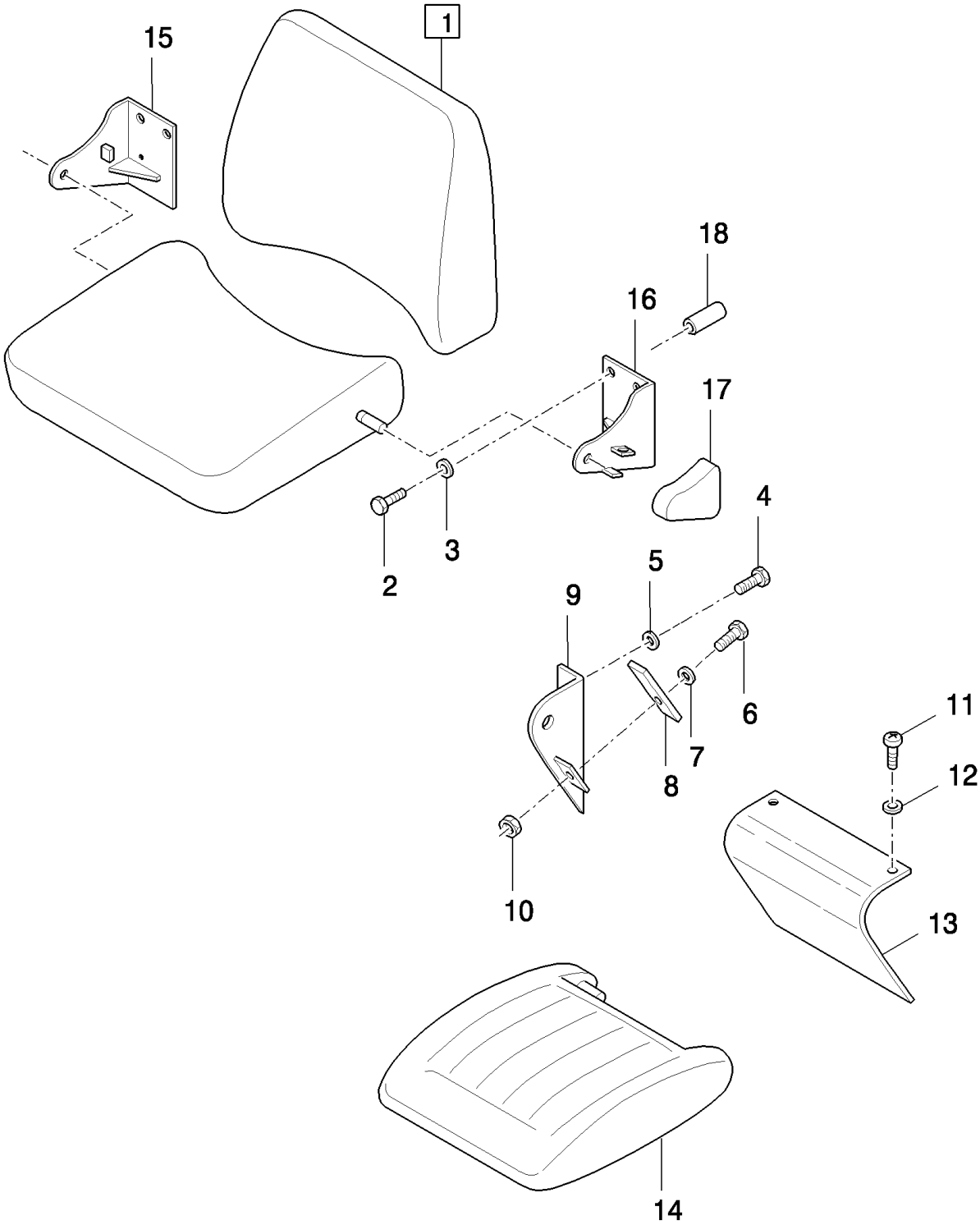

FOR TX63 WITH REMOTE CONTROL ONLY

TX68 COMBINE - BASE UNIT

06.33(01) BUDDY SEAT

ссылка	Номер детали	Кол-во	Описание
1	84015303	1	SEAT, PASSENGER, (15 to 17), BSN C479
1	87324128	1	SEAT, (15 to 17), ASN D480
2	43127	4	BOLT, Hex, M8 x 25, 8.8,
2	120061	4	BOLT, Hex, M8 x 60, 8.8,
3	322358	4	WASHER, SPRING, Belleville, M8,
4	120104	4	SCREW, Hex, M8 x 20, 8.8,
5	322358	4	WASHER, SPRING, Belleville, M8,
6	120100	1	BOLT, Hex, M6 x 20, 8.8,
7	140015	1	WASHER, 6MM
8	84011856	1	LEAF, SPRING,
9	84007535	1	SUPPORT, LH
9	84007536	1	SUPPORT, RH
10	353308	1	NUT, M6 x 1, Cl 8,
11	412491	4	SCREW, M6x16
12	448889	4	WASHER,
13	84007396	1	PLATE, COVER,
14	9500055	1	SEAT, PASSENGER,
15	84037866	1	PLATE, RH
16	84037867	1	PLATE, LH
17	84037868	1	COVER,
18	84448099	4	BUSHING,

FOR TX63 WITH REMOTE CONTROL ONLY

06.34(01) CARBON FILTER

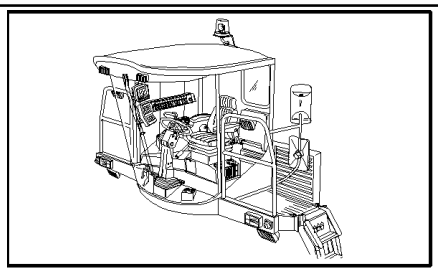

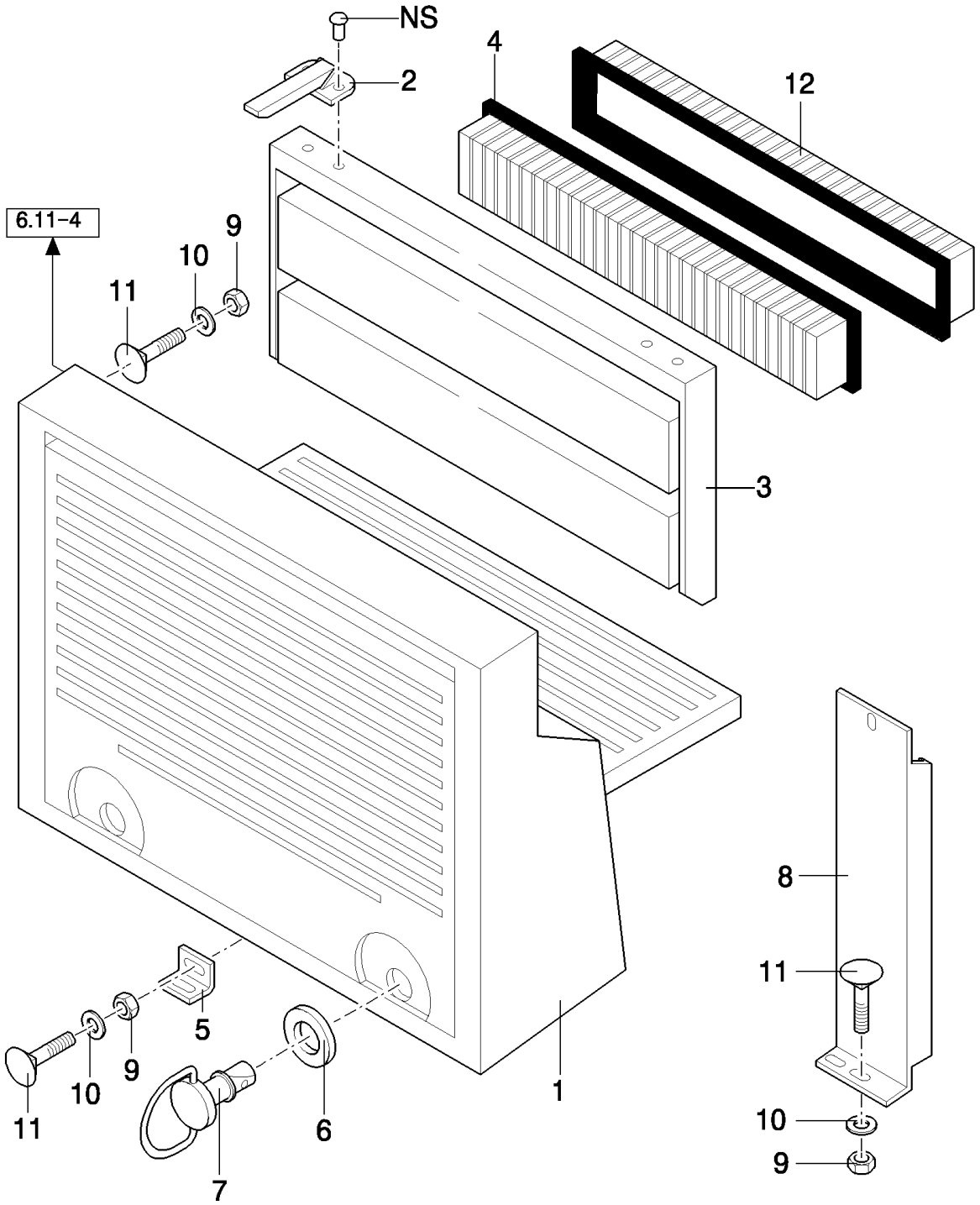

ONLY VALID UNTIL 4816999 (TX62) - 4916999 (TX64) - 6616999 (TX65) - 5023999 (TX66) - 5123999 (TX68)

TX68 COMBINE - BASE UNIT

06.34(01) CARBON FILTER

ссылка	Номер детали	Кол-во	Описание
1	89814151	1	PANEL, BOXED,
2	244457	2	CLAMP,
3	84002843	1	GRILLE,
4	922214	2	FILTER, PAPER
5	89814305	4	BRACKET,
6	84000656	4	WASHER,
7	89819681	2	PANEL, DOOR,
8	89814459	1	PANEL, , FOR TX66-68 ONLY
9	9706690	AR	NUT, M8, Cl 8,
10	322358	AR	WASHER, SPRING, Belleville, M8,
11	86507486	AR	BOLT, CARRIAGE, Short NK, M8 x 20, Cl8.8, Full Thd,
12	80922215	2	FILTER, ELEMENT, CARBON

ONLY VALID UNTIL 4816999 (TX62) - 4916999 (TX64) - 6616999 (TX65) - 5023999 (TX66) - 5123999 (TX68)

06.35(01) AIR FILTER

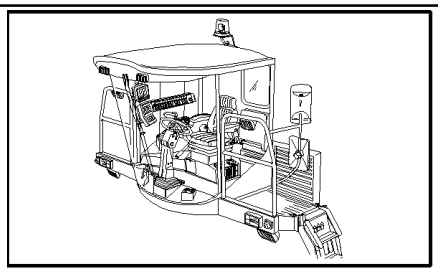

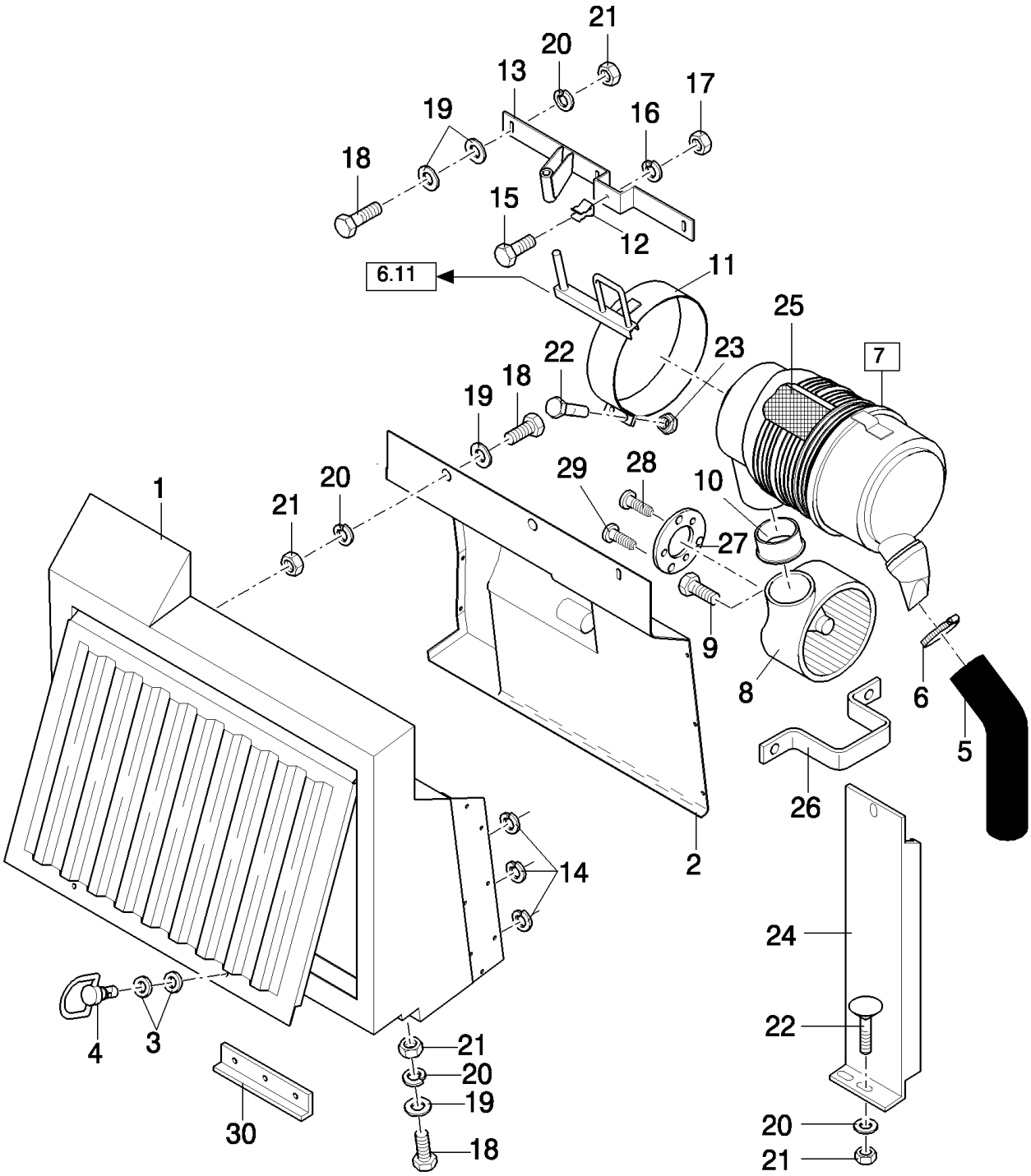

ONLY VALID FROM 4817001 (TX62) - 461033001 (TX63) - 4917001 (TX64) - 6617001 (TX65) - 5024001 (TX66) - 4404001 (TX67) - 5124001 (TX68)

TX68 COMBINE - BASE UNIT

06.35(01) AIR FILTER

ссылка	Номер детали	Кол-во	Описание
1	84042461	1	PANEL, BOXED, , -C1169
1	84429922	1	PANEL, BOXED, , D1170-
2	84037657	1	PLATE, , -C1169
2	84429923	1	PLATE, , D1170-
3	84000656	4	WASHER,
4	89819681	2	PANEL, DOOR,
5	84038577	1	HOSE, FLEXIBLE,
6	360747	1	CLAMP,
7	84036675	1	FILTER, AIR, (25)
8	84056300	1	BLOWER,
9	412407	3	SCREW,
10	84002842	1	RING,
11	84036982	1	SUPPORT,
12	84035664	1	CLIP,
13	84036981	1	SUPPORT,
14	322356	3	WASHER,
15	80120099	1	BOLT, Hex, M6 x 16, 8.8,
16	322357	1	WASHER, SPRING, Belleville, M6,
17	15896221	1	NUT, M6, Cl 10,
18	120104	12	SCREW, Hex, M8 x 20, 8.8,
19	378243	13	WASHER, M8,
20	322358	12	WASHER, SPRING, Belleville, M8,
21	9706690	12	NUT, M8, Cl 8,
22	43128	2	BOLT, Hex, M8 x 30, 8.8,
23	86629542	2	NUT, LOCK, M8 x 1.25, Cl 8,
24	89814459	1	PANEL, , FOR TX66-68 ONLY
25	84036676	1	FILTER, AIR,
26	84043110	1	CLAMP,
27	84043303	1	RING, , -C1301
27	84446072	1	RING, , D1302-
28	84043237	3	SCREW,
29	84043238	4	SCREW,
30	84045786	1	PROFILE, , -C7580

ONLY VALID FROM 4817001 (TX62) - 461033001 (TX63) - 4917001 (TX64) - 6617001 (TX65) - 5024001 (TX66) - 4404001 (TX67) - 5124001 (TX68)

SECTIONS	**SECTIONS**	**SECCIONES**	**AFSNIT**
SEZIONI	**ABSCHNITTE**	**SECÇÕES**	**SECTIES**

SEC. 7

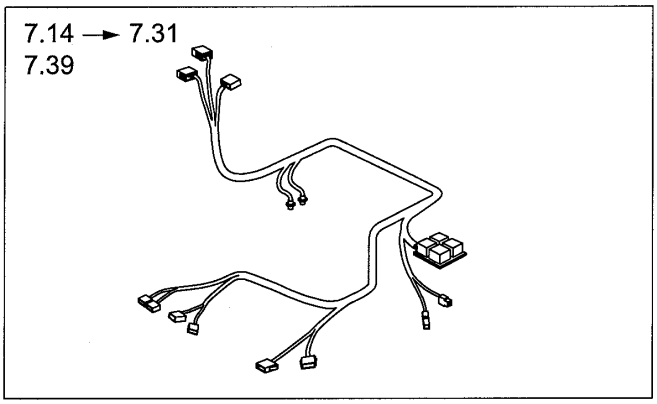

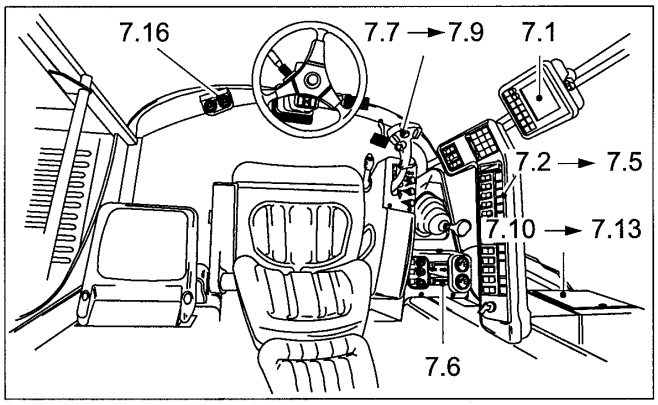

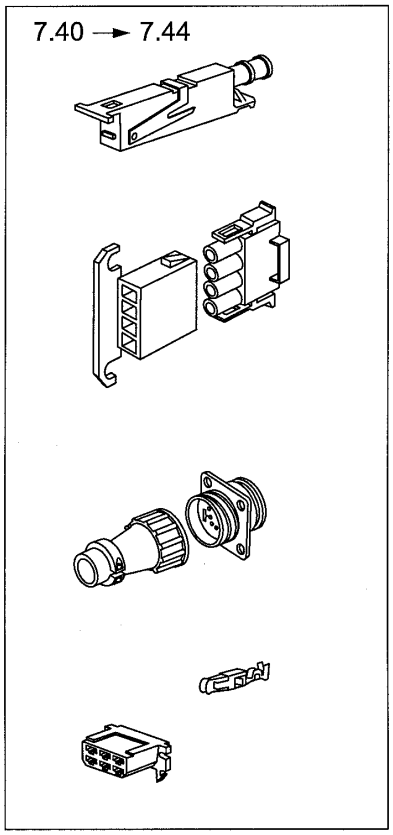

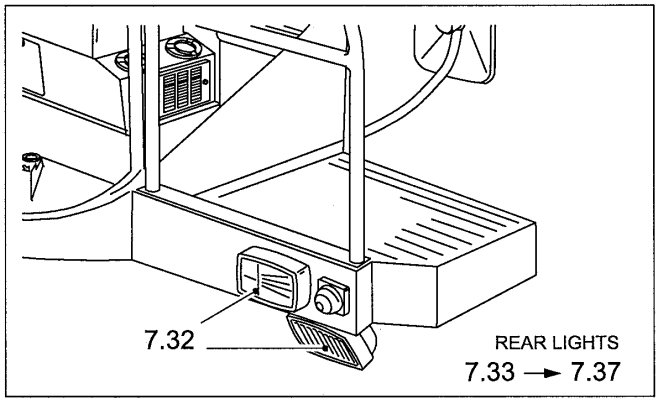

ссылка	Номер детали	Кол-во	Описание

07.01(01) INSTRUMENT PANEL AND WIRING LOOMS

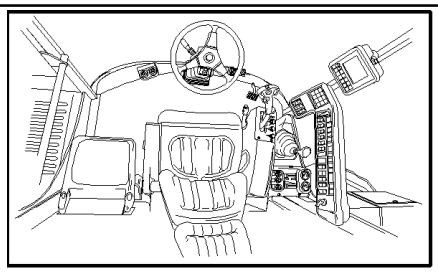

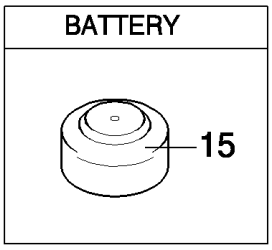

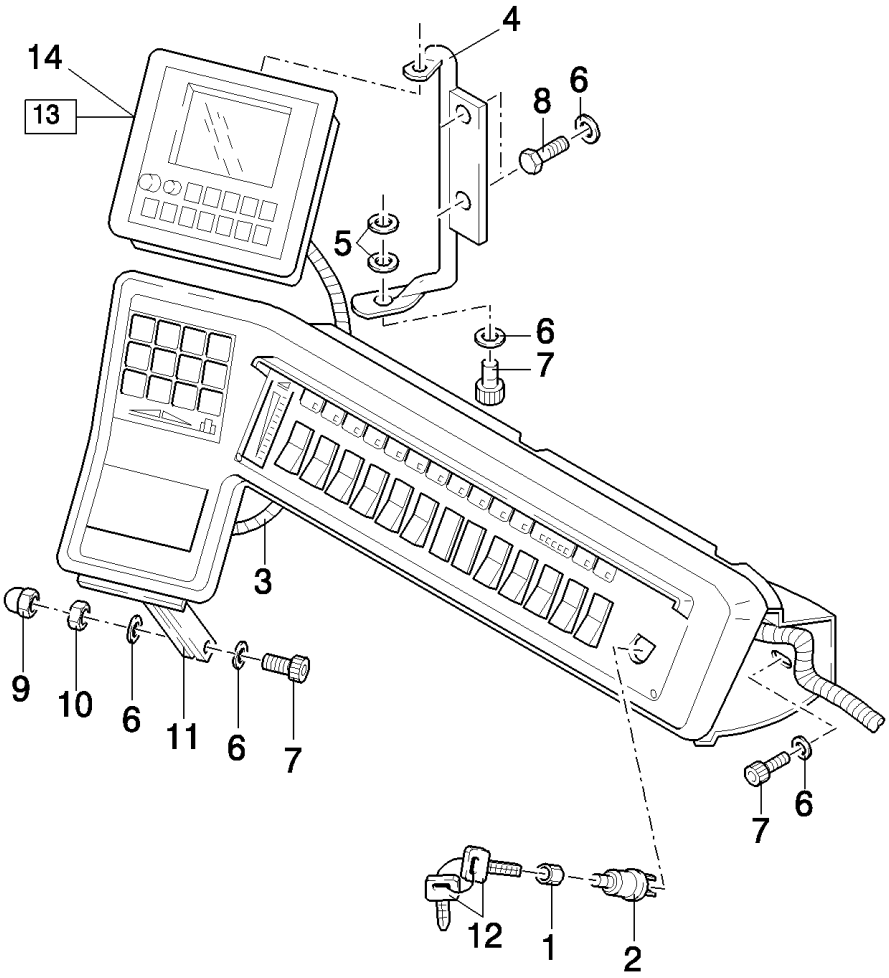

TX68 COMBINE - BASE UNIT

07.01(01) INSTRUMENT PANEL AND WIRING LOOMS

ссылка	Номер детали	Кол-во	Описание
1	D4NN11N496A	1	NUT,
2	E8NN11N572AB	1	SWITCH, IGNITION,
3	84032301	1	CABLE,
4	9832284	1	SUPPORT,
5	9819099	1	WASHER,
6	448889	7	WASHER,
7	412491	5	SCREW,
8	84007540	4	SCREW,
9	747881	2	NUT,
10	15896221	2	NUT, M6, Cl 10,
11	9812186	1	SUPPORT,
12	E9NN11603AB	2	KEY, IGNITION,
13	9835300	1	MONITOR, CONTROL, ENGLISH, -C4540
13	84001803	1	MONITOR, CONTROL, ENGLISH, -C0009
13	84002775	1	PANEL, INSTRUMENTS, , -C0017
13	84041856	1	MONITOR, CONTROL, , -C0032
13	84055601	1	MONITOR, CONTROL, , D1033-
13	84031154	1	MONITOR, CONTROL, ENGLISH, WITH FLEX HEADER ONLY, -C6620
13	84002776	1	MONITOR, CONTROL, , WITH FLEX HEADER ONLY, -C0017
13	84041855	1	MONITOR, CONTROL, , WITH FLEX HEADER ONLY, -C0032
13	84055641	1	MONITOR, CONTROL, , WITH FLEX HEADER ONLY, D1033-
14	84037116	1	EPROM CHIP, DUTCH, 28 PINS, -C6620
14	84037117	1	EPROM CHIP, FRENCH, 28 PINS, -C6620
14	84037118	1	EPROM CHIP, GERMAN, 28 PINS, -C6620
14	84037119	1	EPROM CHIP, DANISH, 28 PINS, -C6620
14	84037120	1	EPROM CHIP, ITALIAN, 28 PINS, -C6620
14	84037121	1	EPROM CHIP, SPANISH, 28 PINS, -C6620
14	84037527	1	EPROM CHIP, ENGLISH, 28 PINS, -C6620
14	NSS	1	NOT SERVICED SEPARATELY, Eprom Chip, 32PINS, D6620-
14	84055683	1	EPROM CHIP, EUROPE, ASN D348
14	84055682	1	EPROM CHIP, RUSSIAN, BSN C331
14	84055683	1	EPROM CHIP, EUROPE, ASN D332
15	84056021	1	BATTERY, DRY,

07.02(01) INSTRUMENT PANEL AND WIRING LOOMS

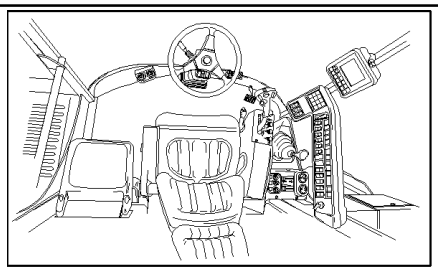

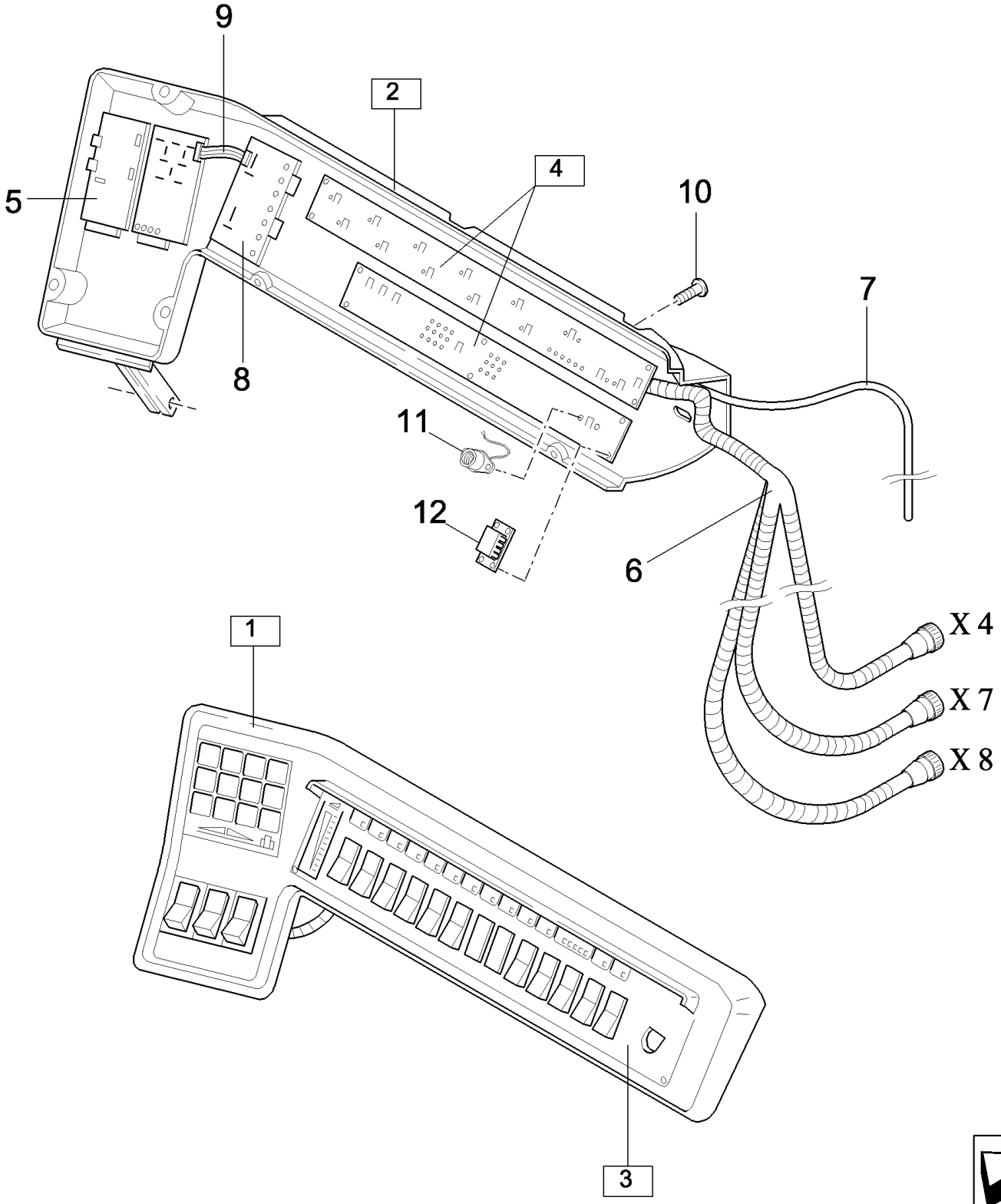

TX68 COMBINE - BASE UNIT

07.02(01) INSTRUMENT PANEL AND WIRING LOOMS

ссылка	Номер детали	Кол-во	Описание
1	84000386	1	PANEL, INSTRUMENTS, (7.2,7.3), FOR TX66-68 ONLY, -C4620
1	84001799	1	PANEL, INSTRUMENTS, (7.2,7.4), FOR TX66-68 ONLY, -C0008
1	84001799	1	PANEL, INSTRUMENTS, (7.2,7.4), FOR TX64-65 ONLY, -C5500
1	84002773	1	PANEL, INSTRUMENTS, (7.2,7.4), FOR TX64-65-66-68 ONLY, -C0031
1	84002771	1	PANEL, INSTRUMENTS, (7.2,7.5), WITH COMPENSATION, FOR TX62 ONLY, -C0031
1	84002772	1	PANEL, INSTRUMENTS, (7.2,7.5), FOR TX62 ONLY, WITHOUT COMPENSATION, -C0031
2	84001152	1	COVER, [7.1(3)]
3	84037612	1	PANEL, INSTRUMENTS, FRONT [(4,5,8,9),7.1,7.4(1,2)], FOR TX64-65-66-68 ONLY, -C6405
3	84035549	1	PANEL, INSTRUMENTS, FRONT [(4,5,8,9),7.1,7.4(1,2)], FOR TX64-65-66-67-68 ONLY, FOR TX63 WITH REMOTE CONTROL, D6405-
3	84037611	1	PANEL, INSTRUMENTS, FRONT [(4,5,8,9),7.1,7.5(1,2)], FOR TX62 ONLY, WITH COMPENSATION, -C6405
3	84035548	1	PANEL, INSTRUMENTS, FRONT [(4,5,8,9),7.1,7.5(1,2)], WITH COMPENSATION, FOR TX62-63 ONLY, D6405-
3	84037610	1	PANEL, INSTRUMENTS, FRONT [(4,5,8,9),7.1,7.5(1,2)], FOR TX62 ONLY, WITHOUT COMPENSATION, -C6405
3	84035547	1	PANEL, INSTRUMENTS, FRONT [(4,5,8,9),7.1,7.5(1,2)], WITHOUT COMPENSATION, FOR TX62 ONLY, D6405-
4	9835304	1	BOARD, PRINTED CIRCUIT, (11), -C6620
4	84037581	1	BOARD, PRINTED CIRCUIT, (11,12), D6620-
5	9594457	1	MONITOR, CONTROL,
6	9812272	1	HARNESS, WIRE, , FOR TX66-68 ONLY, -C4620
6	84001798	1	HARNESS, WIRE, , FOR TX66-68 ONLY, -C0008
6	84001798	1	HARNESS, WIRE, , FOR TX64-65 ONLY, -C5500
6	84002476	1	HARNESS, WIRE, , FOR TX64-65-66-68 ONLY, -C0031
6	84035325	1	HARNESS, WIRE, , FOR TX64-65-66-67-68 ONLY, FOR TX63 WITH REMOTE CONTROL, D6405-
6	84001475	1	HARNESS, WIRE, , FOR TX62 ONLY, -C6405
6	84035324	1	HARNESS, WIRE, , FOR TX62-63 ONLY, D6405-
7	9850332	1	CABLE, L:6M
7	84053876	1	CABLE, L:8M
8	9835303	1	BOARD, PRINTED CIRCUIT, , -C6620
8	84037580	1	BOARD, PRINTED CIRCUIT, , D6620-
9	84037747	1	CABLE, ELECTRIC,
10	412475	9	SCREW,
11	450051	1	ALARM, Buzzer
12	84607110	1	CONNECTOR, WIRE,

07.03(01) INSTRUMENT PANEL AND WIRING LOOMS - UNTIL --08999

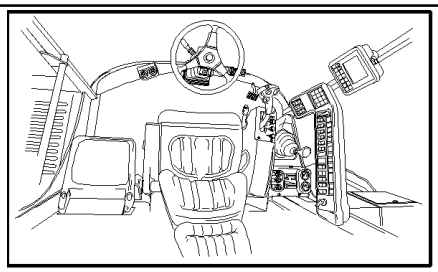

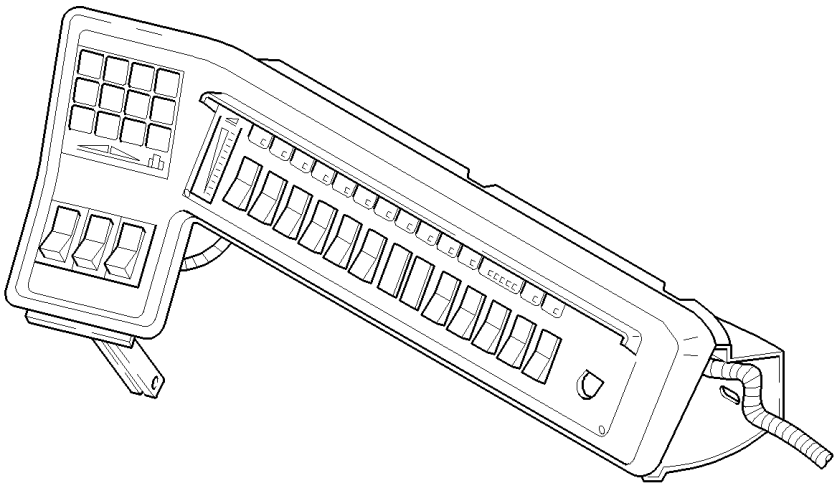

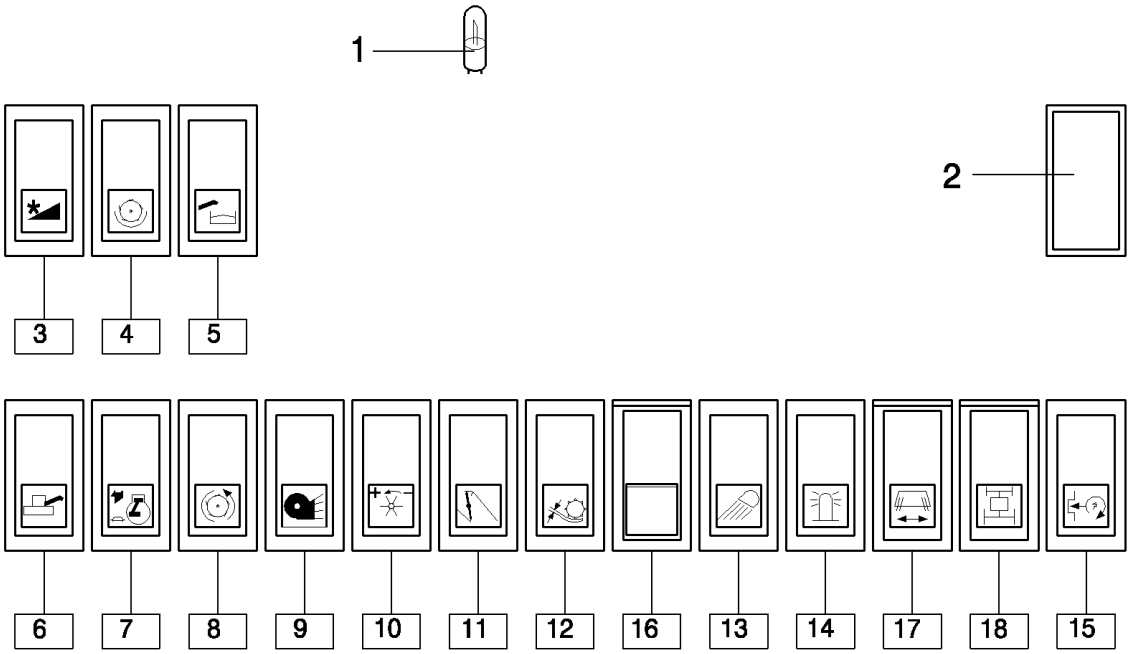

TX68 COMBINE - BASE UNIT

07.03(01) INSTRUMENT PANEL AND WIRING LOOMS - UNTIL --08999

ссылка	Номер детали	Кол-во	Описание
1	84017423	AR	BULB, 1.2W/12V
2	9504368	AR	PLUG,
3	9850607	1	SWITCH, (1) HEADER
4	9850608	1	SWITCH, THRESHING, (1) THRESHING
5	9850609	1	SWITCH, (1) UNLOADING
6	9850610	1	SWITCH, (1) UNLOADING TUBE
7	84004387	1	SWITCH ASSY, (1) ENGINE
8	9817975	1	SWITCH, THRESHING, (1) DRUM
9	9817421	1	SWITCH, FAN, (1) FAN
10	84004541	1	SWITCH ASSY, (1) REEL
11	9850612	1	SWITCH, (1) STRAW CHOPPER
12	84014460	1	SWITCH ASSY, (1)
13	9850613	1	SWITCH, LIGHTS, (1) LIGHTS
14	9817431	1	SWITCH, FLASHER, (1) FLASHER
15	84012973	1	SWITCH ASSY, (1) RESET
16	9850611	1	SWITCH, (1) KNIVES
17	9850615	1	SWITCH, (1) DEFLECTORS
18	89850614	1	SWITCH, (1) REAR WHEEL DRIVE

07.04(01) INSTRUMENT PANEL AND WIRING LOOMS

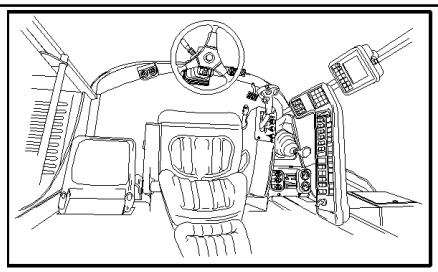

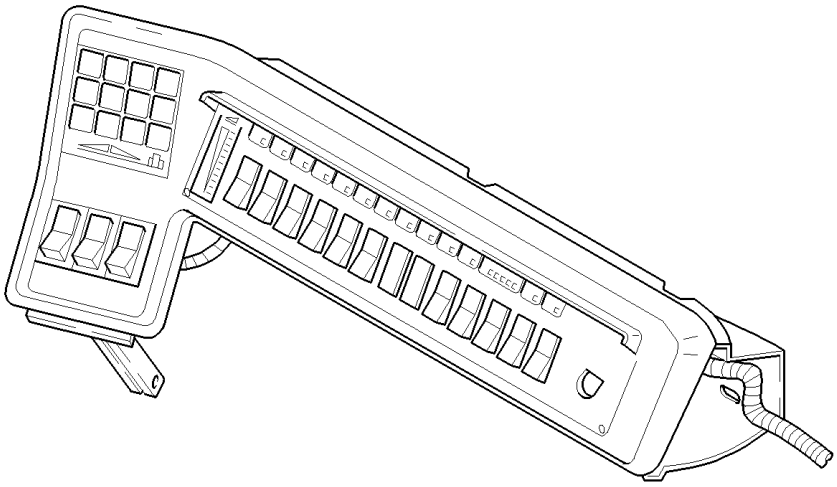

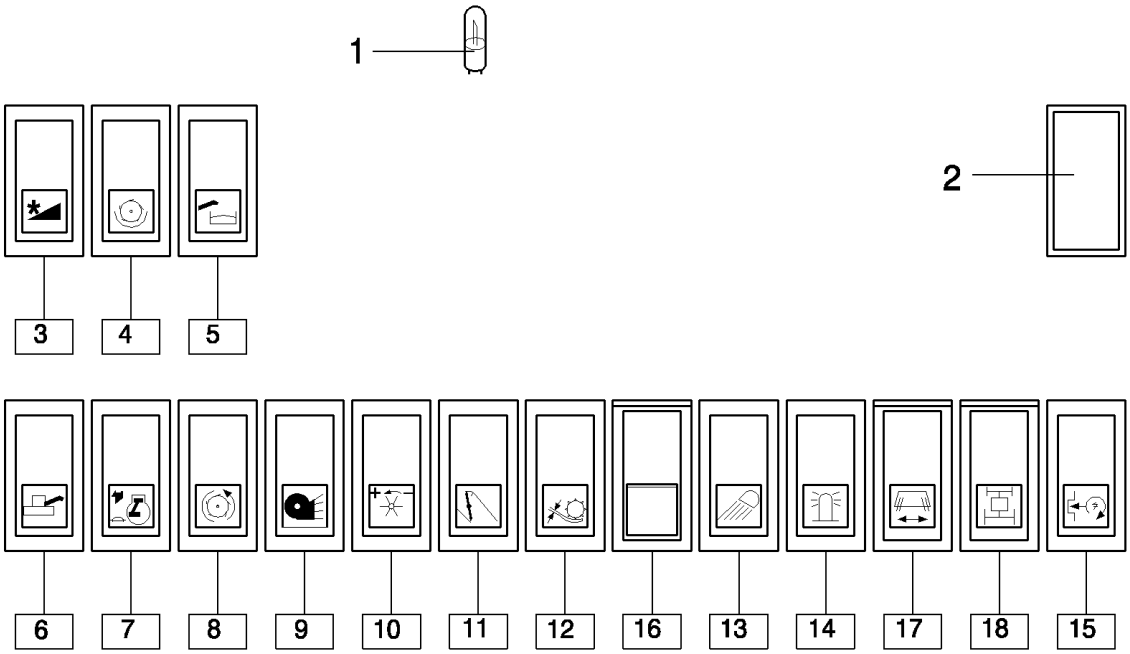

ONLY VALID FROM 5009001 (TX66) - 4404001 (TX67) - 5109001 (TX68) / FOR TX63 WITH REMOTE CONTROL ONLY

TX68 COMBINE - BASE UNIT

07.04(01) INSTRUMENT PANEL AND WIRING LOOMS

ссылка	Номер детали	Кол-во	Описание
1	84017423	AR	BULB, 1.2W/12V
2	9504368	AR	PLUG,
3	9850607	1	SWITCH, (1) HEADER
4	9850608	1	SWITCH, THRESHING, (1) THRESHING
5	9850609	1	SWITCH, (1) UNLOADING
6	84018204	1	SWITCH ASSY, (1) UNLOADING TUBE
7	84015779	1	SWITCH ASSY, (1) ENGINE, -C6405
7	84019741	1	SWITCH ASSY, (1) ENGINE, D6405-
8	9817975	1	SWITCH, THRESHING, (1) DRUM
9	9817421	1	SWITCH, FAN, (1) FAN
10	84004541	1	SWITCH ASSY, (1) REEL
11	9850612	1	SWITCH, (1) STRAW CHOPPER
12	84014126	1	SWITCH, PRESSURE, (1) DRUM
13	9850613	1	SWITCH, LIGHTS, (1) LIGHTS
14	9817431	1	SWITCH, FLASHER, (1) FLASHER
15	84012973	1	SWITCH ASSY, (1) RESET
16	9850611	1	SWITCH, (1) KNIVES
17	9850615	1	SWITCH, (1) DEFLECTORS
18	89850614	1	SWITCH, (1) REAR WHEEL DRIVE

ONLY VALID FROM 5009001 (TX66) - 4404001 (TX67) - 5109001 (TX68) / FOR TX63 WITH REMOTE CONTROL ONLY

07.06(01) INSTRUMENT PANEL AND WIRING LOOMS

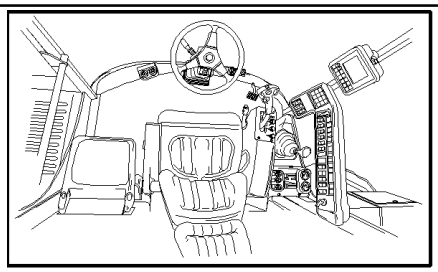

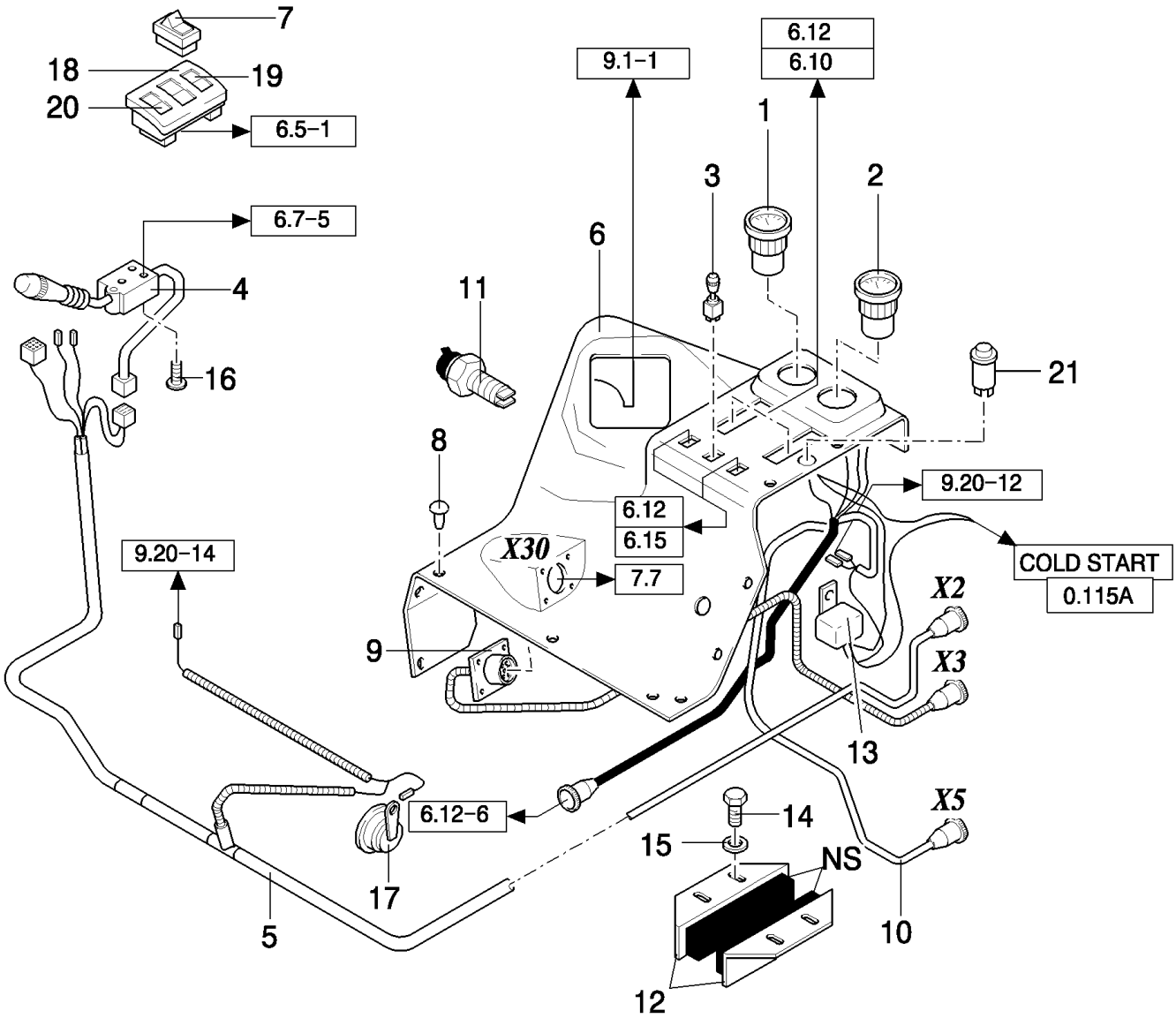

TX68 COMBINE - BASE UNIT

07.06(01) INSTRUMENT PANEL AND WIRING LOOMS

ссылка	Номер детали	Кол-во	Описание
1	9837115	1	GAUGE, LEVEL,
2	9837116	1	GAUGE, LEVEL,
3	9850817	1	SWITCH, FAN, CAB FAN
4	84014920	1	SWITCH ASSY,
5	9812265	1	HARNESS, WIRE,
6	9818587	1	CASE, GEARSHIFT, FOR TX62-63-64-65-66-68 ONLY
6	84002975	1	CASE, GEARSHIFT, FOR TX67 ONLY
7	89817432	1	SWITCH, FLASHER,
8	446914	AR	PLUG,
9	9812839	1	HARNESS, WIRE, , -C6405
9	84035356	1	HARNESS, WIRE, , D6405-
10	9812268	1	HARNESS, WIRE, , -C6405
10	84035182	1	HARNESS, WIRE, , -C0030
10	84035638	1	HARNESS, WIRE, , -C0035
10	84052389	1	HARNESS, WIRE, , D1033-
11	374418	1	SOCKET, POWER,
12	84000548	2	SUPPORT,
13	84000651	AR	RELAY,
14	80120099	4	BOLT, Hex, M6 x 16, 8.8,
15	140015	4	WASHER, 6MM
16	280154	3	SCREW, SELF TAPPING, Cross Rd Hd, #6 x 1/2",
17	80354374	1	HORN,
18	84014917	1	PLATE, COVER,
19	9817519	1	LAMP,
20	9817520	1	LAMP,
21	335378	1	SWITCH, Cold start

07.07(01) CONTROL LEVER FOR HYDRAULICS

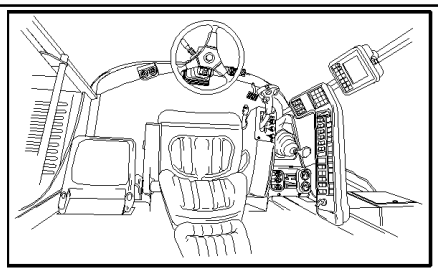

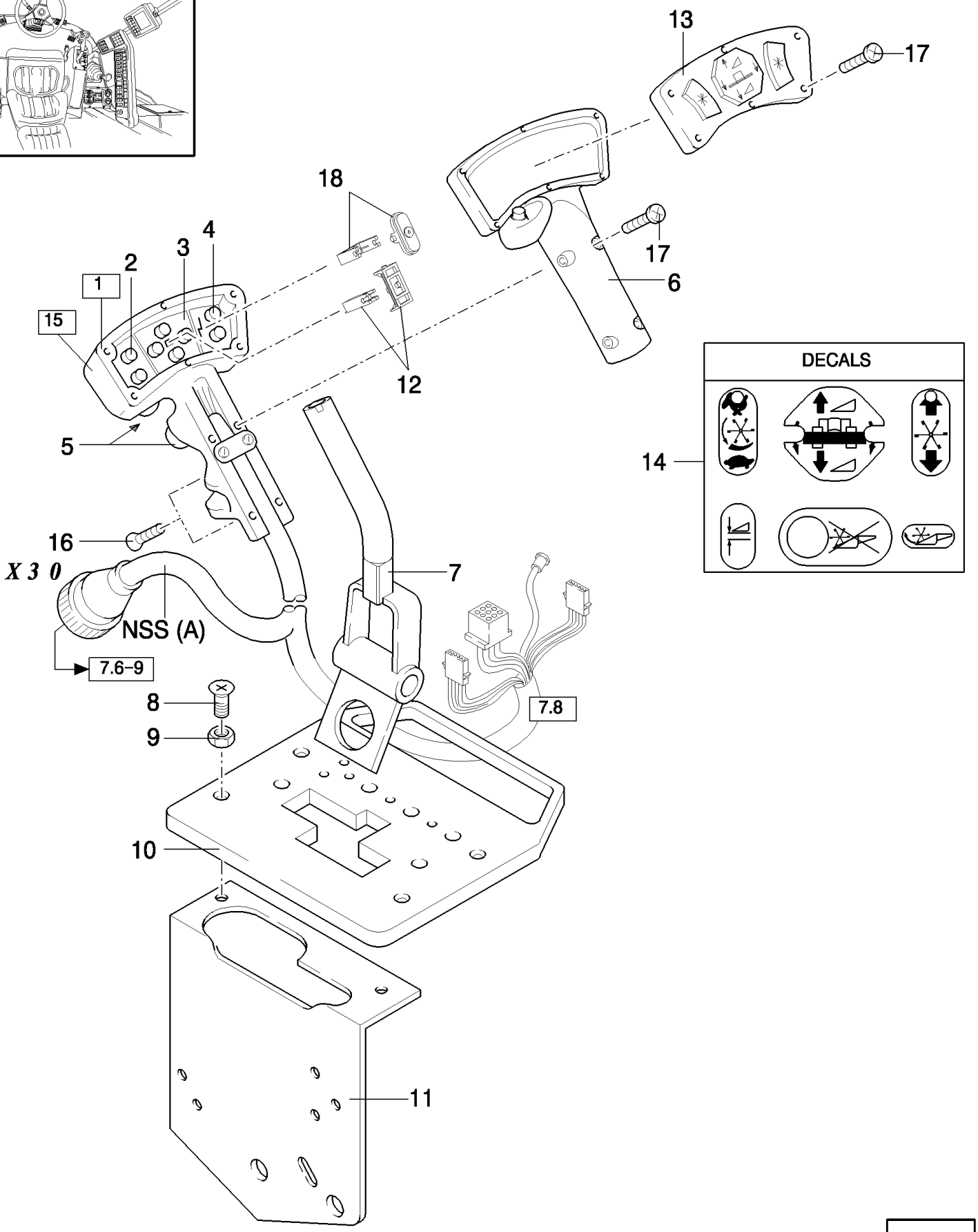

TX68 COMBINE - BASE UNIT

07.07(01) CONTROL LEVER FOR HYDRAULICS

ссылка	Номер детали	Кол-во	Описание
1	84017717	1	HANDLE, (2 to 14,A,16 to 18), FOR TX63-64-65-66-68 ONLY
1	84017717	1	HANDLE, (2 to 14,A,16 to 18), WITH COMPENSATION, FOR TX62 ONLY
1	84001492	1	HANDLE, (2 to 14,A,16 to 18), FOR TX62 ONLY, WITHOUT COMPENSATION
1	84035357	1	HANDLE, (2 to 14,A,16 to 18), FOR TX67 ONLY
2	84018843	1	BOARD, PRINTED CIRCUIT, LH, INCLUDING SWITCHES
3	84018842	1	BOARD, PRINTED CIRCUIT, , INCLUDING SWITCHES
4	84018844	1	BOARD, PRINTED CIRCUIT, RH, INCLUDING SWITCHES
5	84018845	2	SWITCH ASSY,
6	84017914	1	COVER,
7	84017665	1	HANDLE,
8	374897	4	SCREW, Hex Flat Hd, M8 x 25, 4.8,
9	86629542	2	NUT, LOCK, M8 x 1.25, Cl 8,
10	84017666	1	COVER, , FOR TX62-63-64-65-66-68 ONLY
10	84036938	1	COVER, , FOR TX67 ONLY
11	9819972	1	SUPPORT,
12	84058337	1	LEVELLING DEVICE,
13	84032398	1	KNOB,
14	84032397	1	DECAL, Set
15	9813919	1	HANDLE, (2 to 6,12 to 14,A,16 to 18)
16	89819756	2	SCREW,
17	84100667	4	SCREW,
18	84058336	2	LEVELLING DEVICE,

07.07A(01) ELECTRICAL EQUIPMENT, SB12 VALVE, COMPENSATION, BLOW-OFF SYSTEM

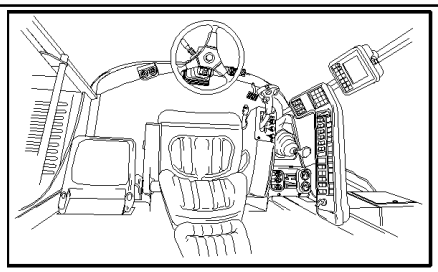

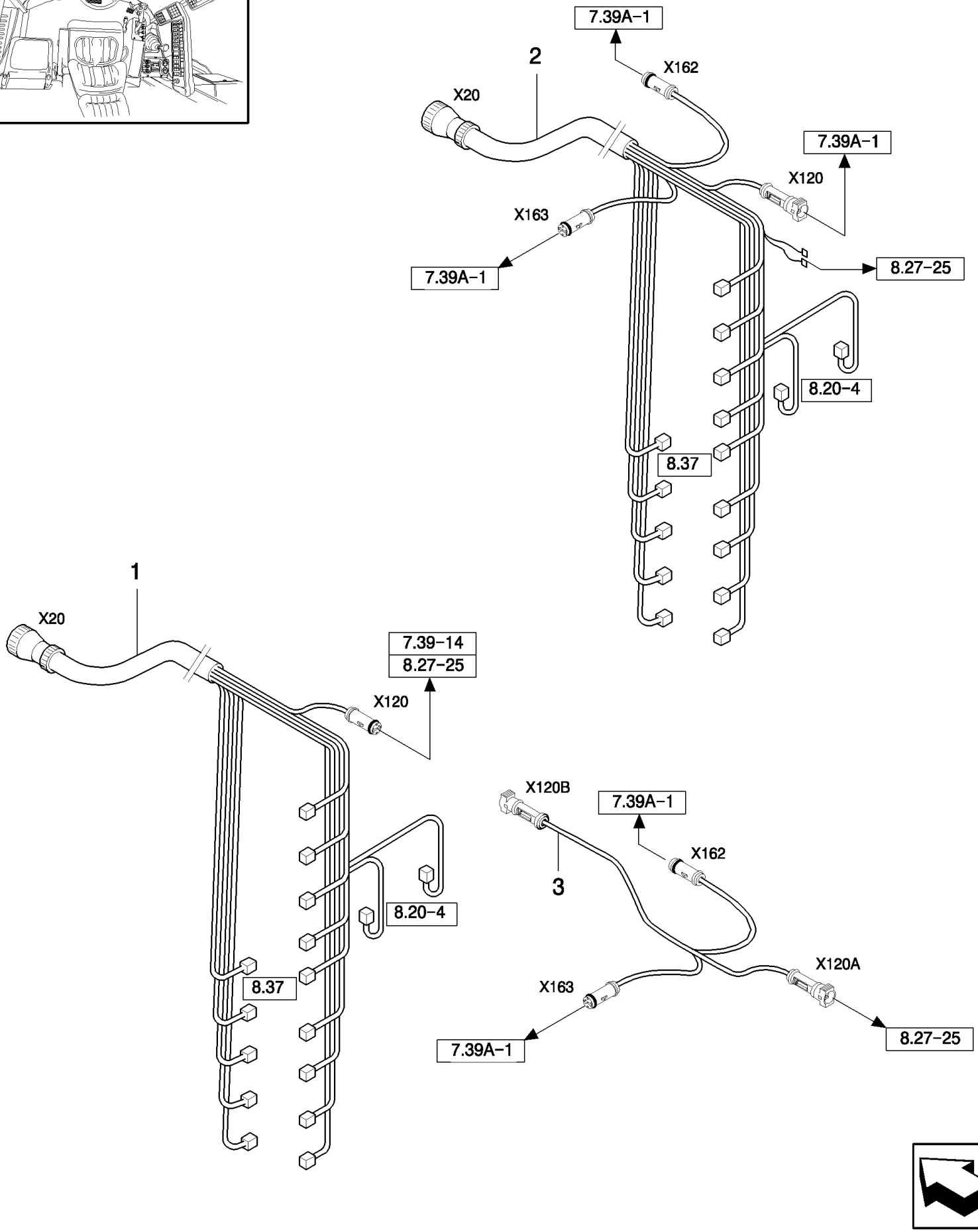

ссылка	Номер детали	Кол-во	Описание
1	9812305	1	HARNESS, WIRE, , FOR TX66-68 ONLY, -C1032
1	84052107	1	HARNESS, WIRE, , FOR TX66-68 ONLY, -C0049
1	84001427	1	HARNESS, WIRE, , FOR TX64-65 ONLY, WITH LATERAL FLOTATION, -C1032
1	84052108	1	HARNESS, WIRE, , WITH LATERAL FLOTATION, FOR TX64-65 ONLY, -C0049
1	84001428	1	HARNESS, WIRE, , FOR TX64-65 ONLY, WITHOUT LATERAL FLOTATION, -C1032
1	84052106	1	HARNESS, WIRE, , WITHOUT LATERAL FLOTATION, FOR TX64-65 ONLY, -C0049
1	84001473	1	HARNESS, WIRE, , WITH COMPENSATION, FOR TX62 ONLY, -C1032
1	84052099	1	HARNESS, WIRE, , FOR TX62 ONLY, WITH COMPENSATION, D1033-
1	84035590	1	HARNESS, WIRE, , WITH COMPENSATION, FOR TX63 ONLY
1	84001474	1	HARNESS, WIRE, , WITHOUT COMPENSATION, FOR TX62 ONLY
1	84035589	1	HARNESS, WIRE, , WITHOUT COMPENSATION, FOR TX63 ONLY
1	84035323	1	HARNESS, WIRE, , FOR TX67 ONLY, -C1109
2	84071594	1	HARNESS, WIRE, , WITH LATERAL FLOTATION, FOR TX64-65 ONLY, D1110-
2	84071657	1	HARNESS, WIRE, , FOR TX64-65 ONLY, WITHOUT LATERAL FLOTATION, D1110-
2	84071593	1	HARNESS, WIRE, , FOR TX66-67-68 ONLY, D1110-
3	84076853	1	HARNESS, WIRE, , ONLY IN COMBINATION WITH REF.1 OF FIG 07.39A, -C1109

07.08(01) ELECTRONIC CONTROL UNIT FOR HYDRAULICS

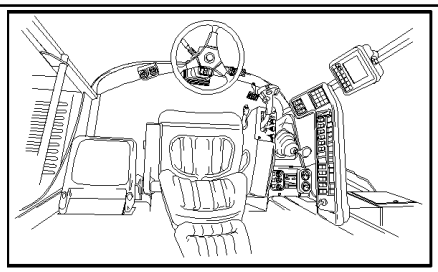

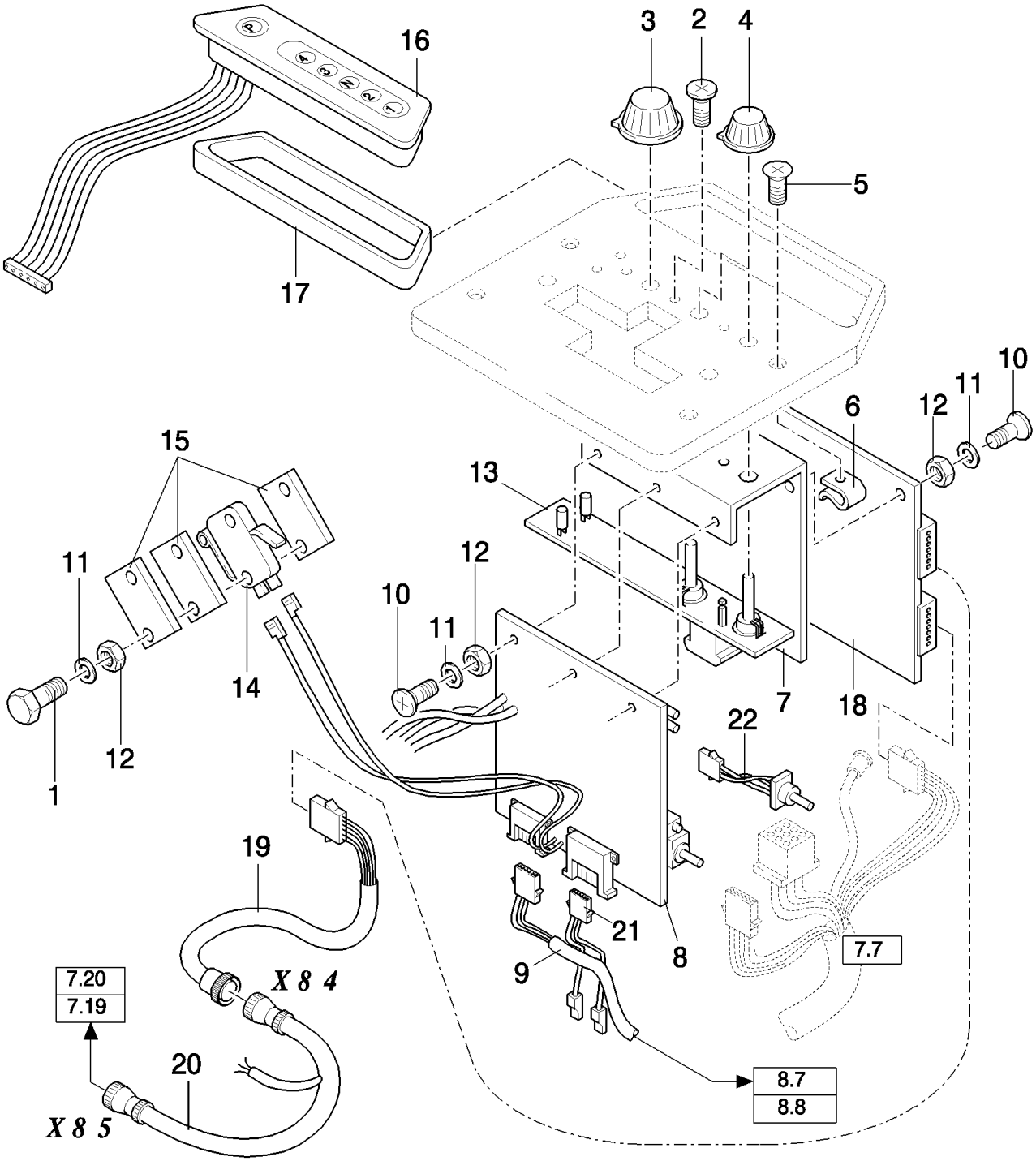

TX68 COMBINE - BASE UNIT

07.08(01) ELECTRONIC CONTROL UNIT FOR HYDRAULICS

ссылка	Номер детали	Кол-во	Описание
1	301571	2	SCREW, M3x25
2	86511824	1	SCREW, Cross Pan Hd, M4 x 20,
3	9819757	1	KNOB, , WITH COMPENSATION
4	9819758	2	KNOB, , WITH COMPENSATION
5	9819754	4	SCREW,
6	9819712	4	CLIP,
7	9819911	1	SUPPORT, , FOR TX62-63-64-65-66-68 ONLY
7	84041994	1	SUPPORT, , FOR TX67 ONLY
8	84320525	1	BOARD, PRINTED CIRCUIT, (21,22)
9	9812292	1	HARNESS, WIRE, , FOR TX66-68 ONLY, -C6405
9	84035211	1	HARNESS, WIRE, , FOR TX66-68 ONLY, -C0032
9	9812292	1	HARNESS, WIRE, , FOR TX66-67-68 ONLY, D1030-
9	84001460	1	HARNESS, WIRE, , FOR TX62-64-65 ONLY, -C6405
9	84035212	1	HARNESS, WIRE, , FOR TX62-64-65 ONLY, -C0032
9	84001460	1	HARNESS, WIRE, , FOR TX62-63-64-65 ONLY, D1033-
10	80120006	3	SCREW,
11	412547	5	WASHER, Serr, M3, 3MM
12	86508812	5	NUT, M3, Cl 8,
13	84017215	1	BOARD, PRINTED CIRCUIT,
14	399159	1	SWITCH,
15	9819980	3	PLATE, , -C7520
15	84002065	3	PLATE, , D7520-
16	84041715	1	BOARD, PRINTED CIRCUIT, , FOR TX67 ONLY
17	84041716	1	HOUSING, , FOR TX67 ONLY
18	84062696	1	BOARD, PRINTED CIRCUIT, , FOR TX67 ONLY, -C1169
18	84100161	1	BOARD, PRINTED CIRCUIT, , FOR TX67 ONLY, D1170-
18	84062437	1	BOARD, PRINTED CIRCUIT, , FOR TX67 ONLY, FOR GERMANY ONLY, -C1169
18	84100160	1	BOARD, PRINTED CIRCUIT, , FOR GERMANY ONLY, FOR TX67 ONLY, D1170-
19	84035368	1	HARNESS, WIRE, , FOR TX67 ONLY, -C1076
19	84064649	1	HARNESS, WIRE, , FOR TX67 ONLY, D1077-
20	84035355	1	HARNESS, WIRE, , FOR TX67 ONLY, -C1076
20	84064652	1	HARNESS, WIRE, , FOR TX67 ONLY, D1077-
21	84043855	1	HARNESS, WIRE, , D7580-
22	84043856	1	POTENTIOMETER, , D7580-

07.09(01) ELECTRONIC CONTROL UNIT FOR HYDRAULICS

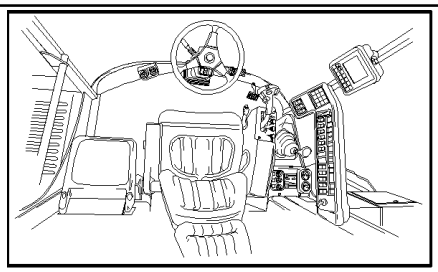

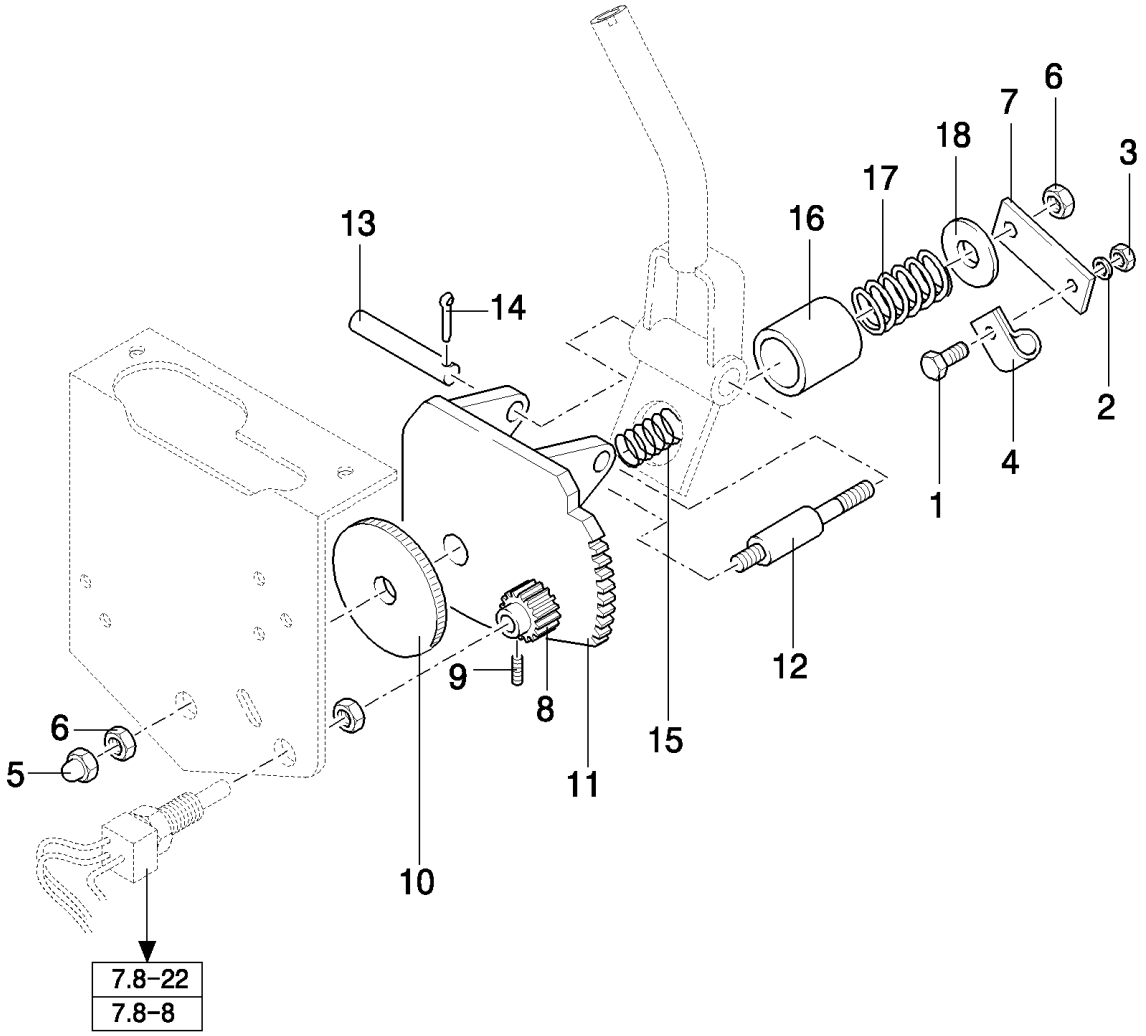

TX68 COMBINE - BASE UNIT

07.09(01) ELECTRONIC CONTROL UNIT FOR HYDRAULICS

ссылка	Номер детали	Кол-во	Описание
1	412491	1	SCREW,
2	322357	1	WASHER, SPRING, Belleville, M6,
3	15896221	1	NUT, M6, Cl 10,
4	9503929	1	CLAMP, RP13
5	747886	1	NUT, M10
6	100016	2	NUT, M10, Cl 8,
7	9832483	1	PLATE, COVER,
8	9819752	1	GEAR, , -C5640
8	84022671	1	GEAR, , D5640-
9	9819753	1	SET SCREW, Hex Soc, M4 x 4, Cup Pt,
10	84056641	1	DISC,
11	9819679	1	SUPPORT,
12	9819970	1	SHAFT,
13	412102	1	PIN,
14	130003	2	PIN, SPLIT (COTTER), M3.2 x 20,
15	320502	1	SPRING,
16	84007406	1	BUSHING,
17	750881	1	SPRING,
18	140219	1	WASHER, 10MM

07.10(01) ELECTRICAL EQUIPMENT, CENTRAL BOX

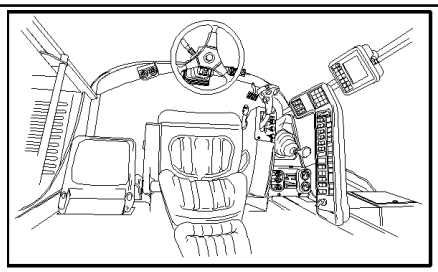

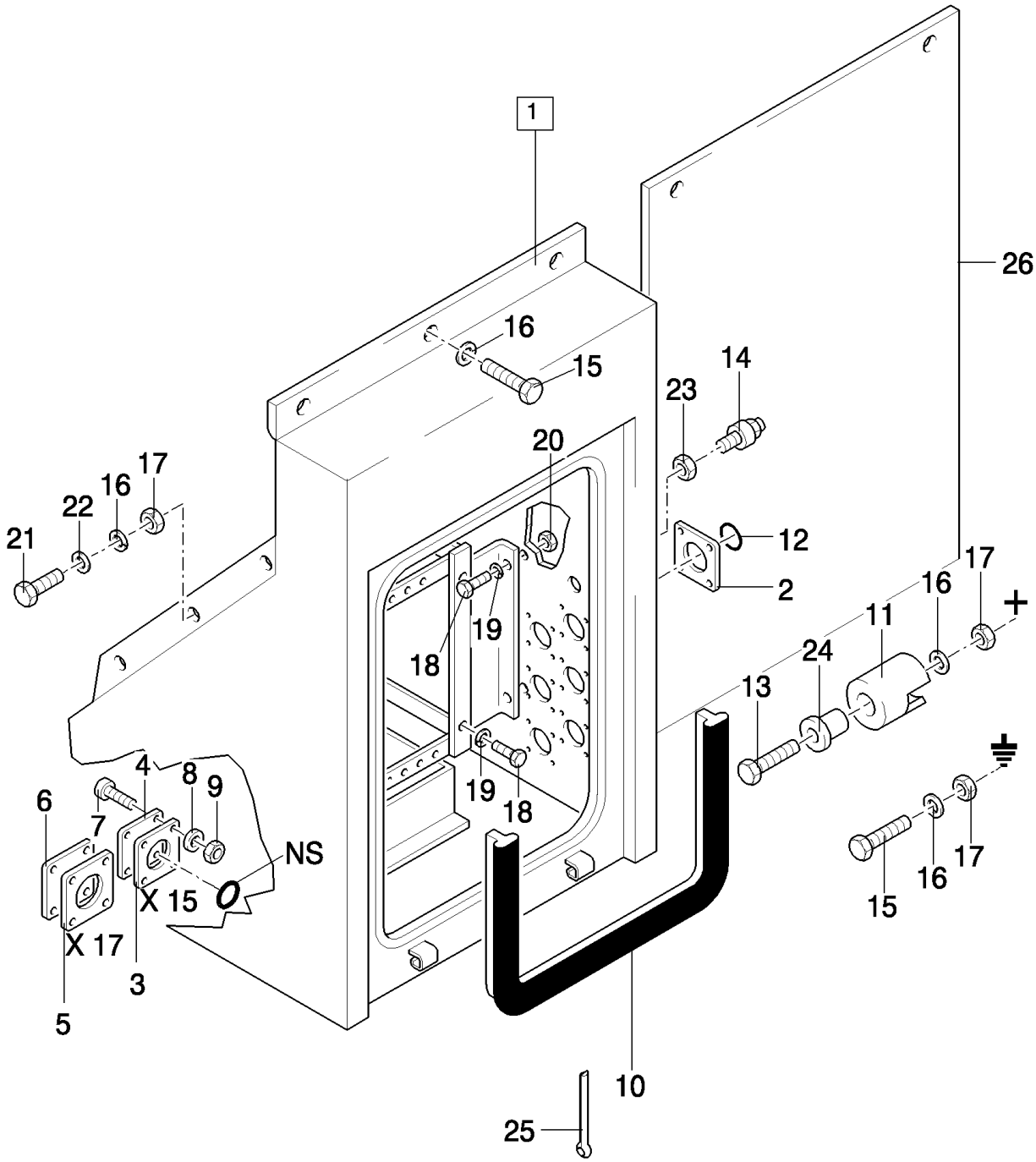

TX68 COMBINE - BASE UNIT

07.10(01) ELECTRICAL EQUIPMENT, CENTRAL BOX

ссылка	Номер детали	Кол-во	Описание
1	9812480	1	PANEL, BOXED, , FOR TX66-68 ONLY, -C4620
1	84001523	1	PANEL, BOXED, , FOR TX66-68 ONLY, -C0008
1	84001523	1	PANEL, BOXED, , FOR TX64-65-66 ONLY, -C5500
1	84032546	1	ELECTRONIC UNIT, CONTROL, [(2 to 9,11 to 17),7.11(7),7.12(A)], WITHOUT COMPENSATION, FOR TX62 ONLY, -C0019
1	84041320	1	ELECTRONIC UNIT, CONTROL, [(2 to 9,11 to 17),7.11(7),7.12(A)], FOR TX62 ONLY, WITHOUT COMPENSATION, -C0032
1	84053610	1	ELECTRONIC UNIT, CONTROL, [(2 to 9,11 to 17),7.11(7),7.12(A)], WITHOUT COMPENSATION, FOR TX62 ONLY, -C0051
1	84429089	1	ELECTRONIC UNIT, CONTROL, [(2 to 9,11 to 17),7.11(7),7.12(A)], FOR TX62 ONLY, WITHOUT COMPENSATION, -C0067
1	NS	1	NOT SERVICED, , WITHOUT COMPENSATION, FOR TX62 ONLY, D1254-
1	84032547	1	ELECTRONIC UNIT, CONTROL, [(2 to 9,11 to 17),7.11(7),7.12(A)], FOR TX62 ONLY, WITH COMPENSATION, -C0019
1	84041321	1	ELECTRONIC UNIT, CONTROL, [(2 to 9,11 to 17),7.11(7),7.12(A)], WITH COMPENSATION, FOR TX62 ONLY, -C0032
1	84053611	1	ELECTRONIC UNIT, CONTROL, [(2 to 9,11 to 17),7.11(7),7.12(A)], FOR TX62 ONLY, WITH COMPENSATION, -C0051
1	84429090	1	ELECTRONIC UNIT, CONTROL, [(2 to 9,11 to 17),7.11(7),7.12(A)], WITH COMPENSATION, FOR TX62 ONLY, -C0067
1	NS	1	NOT SERVICED, , FOR TX62 ONLY, WITH COMPENSATION, D1254-
1	84100338	1	ELECTRONIC UNIT, CONTROL, [(2 to 9,11 to 17),7.11(7),7.12(A)], FOR TX63 ONLY, -C0051
1	84429088	1	ELECTRONIC UNIT, CONTROL, [(2 to 9,11 to 17),7.11(7),7.12(A)], FOR TX63 ONLY, -C0067
1	NS	1	NOT SERVICED, , FOR TX63 ONLY, D1254-
1	84032548	1	PANEL, BOXED, [(2 to 9,11 to 17),7.11(7),7.12(A)], FOR TX64-65-66-68 ONLY, -C0010
1	84037319	1	ELECTRONIC UNIT, CONTROL, [(2 to 9,11 to 17),7.11(7),7.12(A)], FOR TX64-65-66-68 ONLY, -C0017
1	84041322	1	ELECTRONIC UNIT, CONTROL, [(2 to 9,11 to 17),7.11(7),7.12(A)], FOR TX64-65-66-67-68 ONLY, -C0032
1	84100335	1	ELECTRONIC UNIT, CONTROL, [(2 to 9,11 to 17),7.11(7),7.12(A)], FOR TX64-65-66-67-68 ONLY, FOR TX63 WITH REMOTE CONTROL, -C0051
1	84429085	1	ELECTRONIC UNIT, CONTROL, [(2 to 9,11 to 17),7.11(7),7.12(A)], FOR TX63 WITH REMOTE CONTROL, FOR TX64-65-66-67-68 ONLY, -C0067
1	NS	1	NOT SERVICED, , FOR TX64-65-66-67-68 ONLY, FOR TX63 WITH REMOTE CONTROL, D1254-
1	84032545	1	PANEL, BOXED, [(2 to 9,11 to 17),7.11(7),7.12(A)], WITH FLEX HEADER ONLY, FOR TX64-65-66-68 ONLY, -C0010
1	84037318	1	ELECTRONIC UNIT, CONTROL, [(2 to 9,11 to 17),7.11(7),7.12(A)], FOR TX64-65-66-68 ONLY, WITH FLEX HEADER ONLY, -C0017
1	84041324	1	ELECTRONIC UNIT, CONTROL, [(2 to 9,11 to 17),7.11(7),7.12(A)], WITH FLEX HEADER ONLY, FOR TX64-65-66-67-68 ONLY, -C0032
1	84100337	1	ELECTRONIC UNIT, CONTROL, [(2 to 9,11 to 17),7.11(7),7.12(A)], FOR TX64-65-66-67-68 ONLY, WITH FLEX HEADER ONLY, FOR TX63 WITH REMOTE CONTROL, -C0051
1	84429087	1	ELECTRONIC UNIT, CONTROL, , FOR TX63 WITH REMOTE CONTROL, WITH FLEX HEADER ONLY, FOR TX64-65-66-67-68 ONLY, -C0067

TX68 COMBINE - BASE UNIT

07.10(01) ELECTRICAL EQUIPMENT, CENTRAL BOX

ссылка	Номер детали	Кол-во	Описание
1	NS	1	NOT SERVICED, , D1254-
2	9850647	16	ELEMENT, SEALING,
3	9850649	1	ELEMENT, SEALING,
4	9818022	1	COVER,
5	9850648	1	ELEMENT, SEALING,
6	84004450	1	COVER,
7	80120006	72	SCREW, M3x16
8	412547	72	WASHER, Serr, M3, 3MM
9	86508812	72	NUT, M3, Cl 8,
10	9819465	1	PROFILE,
11	9815122	1	PLASTIC RING,
12	84004383	1	ELEMENT, SEALING,
13	120061	1	BOLT, Hex, M8 x 60, 8.8,
14	9837223	1	CONNECTOR, HYD.,
15	120104	3	SCREW, Hex, M8 x 20, 8.8,
16	322358	11	WASHER, SPRING, Belleville, M8,
17	9706690	8	NUT, M8, Cl 8,
18	80120099	8	BOLT, Hex, M6 x 16, 8.8,
19	322357	8	WASHER, SPRING, Belleville, M6,
20	15896221	7	NUT, M6, Cl 10,
22	140016	6	WASHER, M8 x 16 x 1.6,
23	9839398	1	NUT,
24	9815121	1	PLASTIC RING,
25	130006	1	PIN, SPLIT (COTTER), M4 x 20,
26	89812574	1	COVER, , FOR TX66-67-68 ONLY
26	89812599	1	COVER, , FOR TX62-63-64-65 ONLY
21	16043224	6	BOLT, Hex, M8 x 16, 8.8, Full Thd,

07.11(01) ELECTRICAL EQUIPMENT, CENTRAL BOX

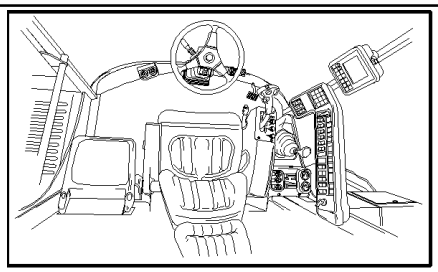

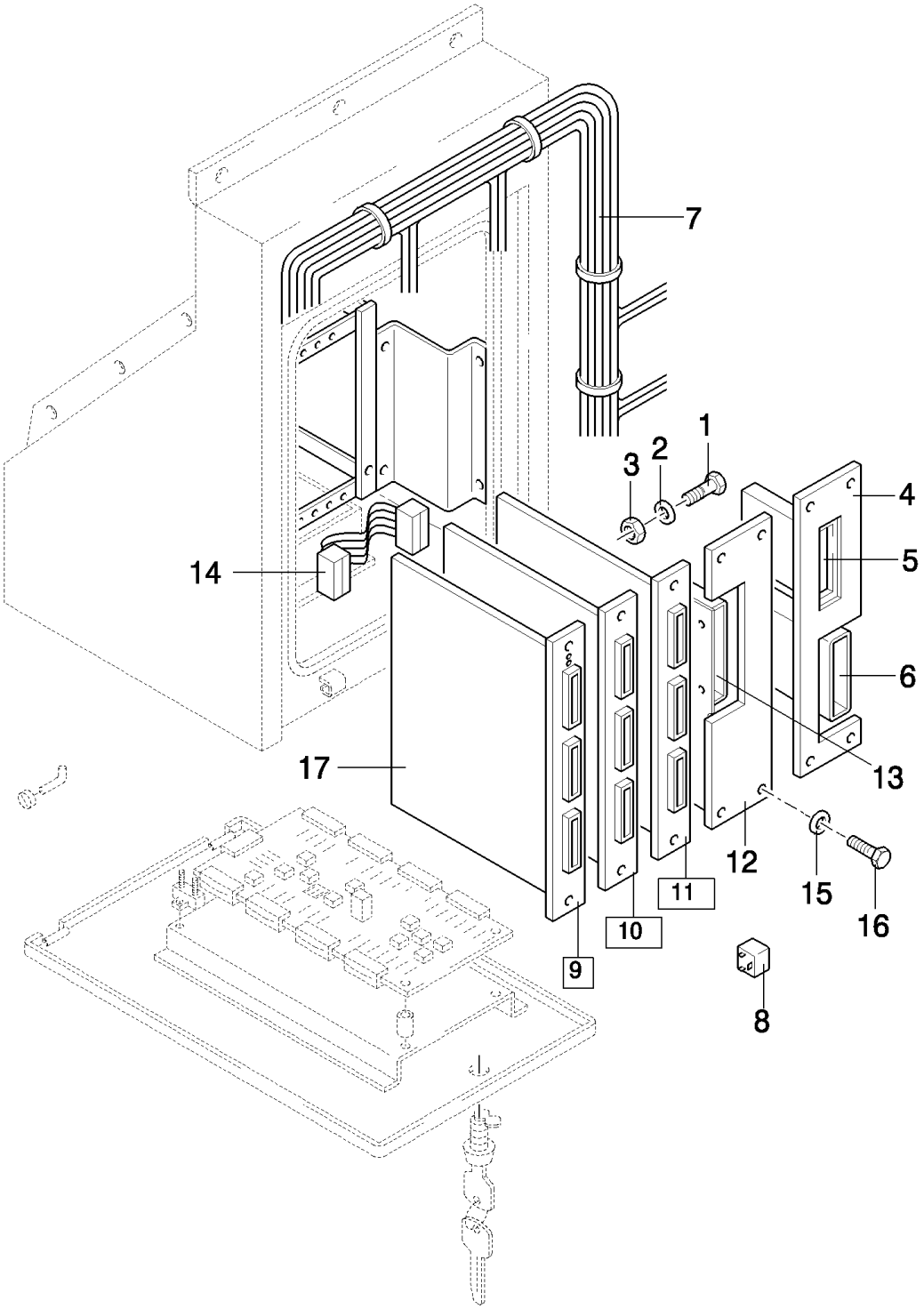

ONLY VALID UNTIL 4812999 (TX62) - 4912999 (TX64) - 6612999 (TX65) - 5019999 (TX66) - 5119999 (TX68)

TX68 COMBINE - BASE UNIT

07.11(01) ELECTRICAL EQUIPMENT, CENTRAL BOX

ссылка	Номер детали	Кол-во	Описание
1	80120099	6	BOLT, Hex, M6 x 16, 8.8,
2	322357	6	WASHER, SPRING, Belleville, M6,
3	15896221	6	NUT, M6, Cl 10,
4	9812609	1	PLATE, COVER,
5	9837662	1	ELECTRONIC UNIT, CONTROL, , WITH LATERAL FLOTATION, -C4540
5	84021899	1	ELECTRONIC UNIT, CONTROL, , WITH LATERAL FLOTATION, D4540-
6	9837661	1	ELECTRONIC UNIT, CONTROL, ULTRASOON
7	9812275	1	HARNESS, WIRE, , FOR TX66-68 ONLY, FROM D5500 REF.7 NSS, -C4540
7	84001573	1	HARNESS, WIRE, , FROM D5500 REF.7 NSS, FOR TX66-68 ONLY, -C0011
7	84022627	1	HARNESS, WIRE, , FOR TX66-68 ONLY, FROM D5500 REF.7 NSS, -C0012
7	84001573	1	HARNESS, WIRE, , FROM D5500 REF.7 NSS, FOR TX64-65 ONLY, -C5660
7	84022627	1	HARNESS, WIRE, , FOR TX64-65 ONLY, FROM D5500 REF.7 NSS, -C0012
7	84001575	1	HARNESS, WIRE, , FROM D5500 REF.7 NSS, FOR TX62 ONLY, WITH COMPENSATION
7	84001574	1	HARNESS, WIRE, , FOR TX62 ONLY, FROM D5500 REF.7 NSS, WITHOUT COMPENSATION
8	84000651	AR	RELAY,
8	84036121	AR	RELAY, RETARDATION
8	84807239	AR	RELAY, K34/35 K44
9	9835301	1	BOARD, PRINTED CIRCUIT, CPU (17), FOR SEASON '94 ONLY
9	84031617	1	BOARD, PRINTED CIRCUIT, CPU
9	84031727	1	BOARD, PRINTED CIRCUIT, CPU, WITH FLEX HEADER ONLY
10	84019877	1	BOARD, PRINTED CIRCUIT, REMOTE (8)
11	9835799	1	BOARD, PRINTED CIRCUIT, RELAY (8)
12	9812608	1	PLATE,
13	84036682	1	ELECTRONIC UNIT, CONTROL,
14	84007586	1	HARNESS, WIRE,
14	84014347	1	HARNESS, WIRE, , WITH FLEX HEADER ONLY
15	84031878	AR	WASHER,
16	84031877	AR	BOLT,
17	84039071	1	EPROM CHIP, , FOR SEASON '94 ONLY

ONLY VALID UNTIL 4812999 (TX62) - 4912999 (TX64) - 6612999 (TX65) - 5019999 (TX66) - 5119999 (TX68)

07.12(01) ELECTRICAL EQUIPMENT, CENTRAL BOX

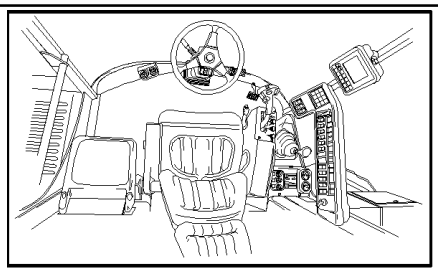

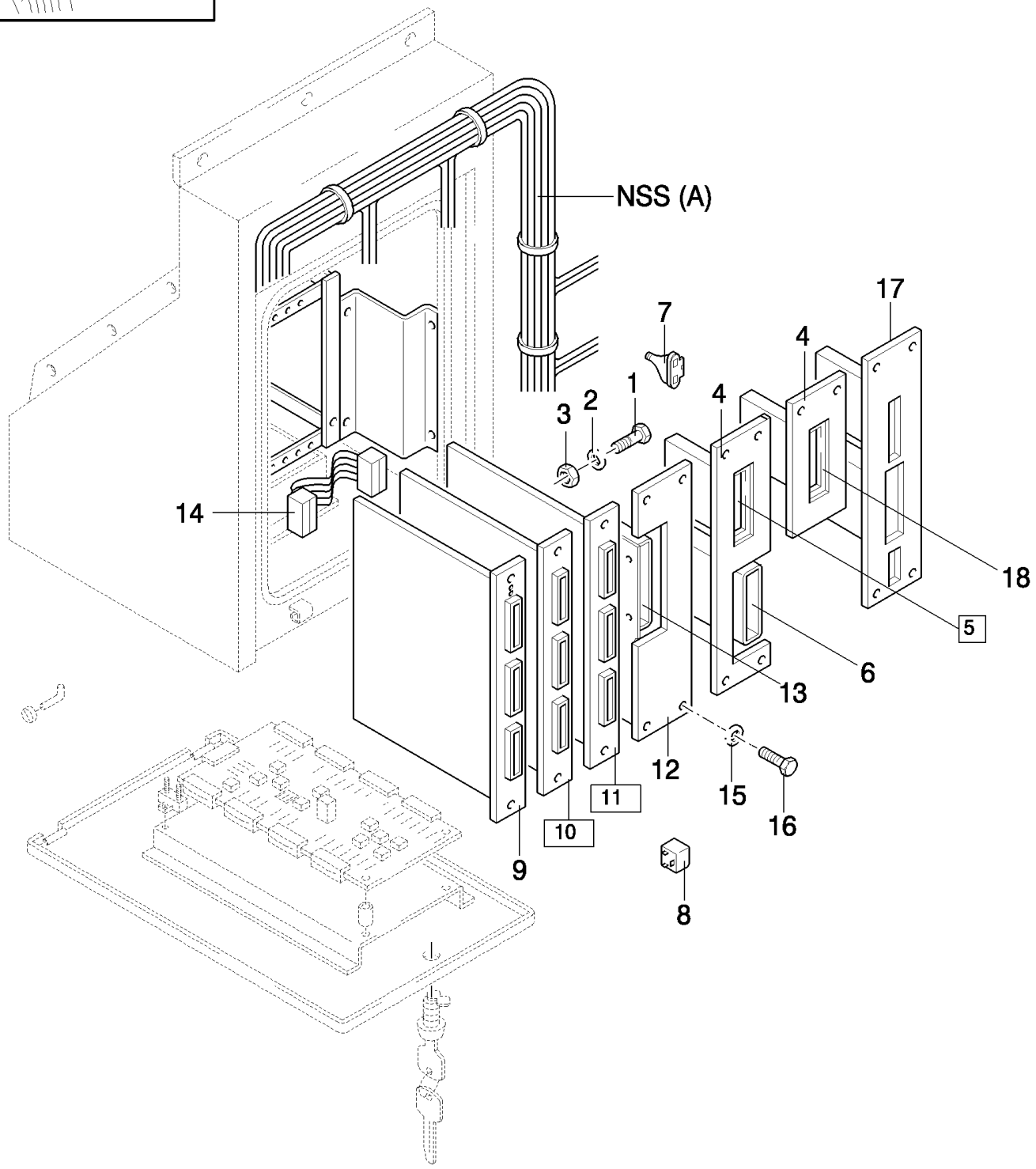

ONLY VALID FROM 4813001 (TX62) - 461033001 (TX63) - 4913001 (TX64) - 6613001 (TX65) - 5020001 (TX66) - 4404001 (TX67) - 5120001 (TX68)

TX68 COMBINE - BASE UNIT

07.12(01) ELECTRICAL EQUIPMENT, CENTRAL BOX

ссылка	Номер детали	Кол-во	Описание
1	80120099	6	BOLT, Hex, M6 x 16, 8.8,
2	322357	6	WASHER, SPRING, Belleville, M6,
3	15896221	6	NUT, M6, Cl 10,
4	9812609	1	PLATE, COVER,
5	84021899	1	ELECTRONIC UNIT, CONTROL, (7), WITH LATERAL FLOTATION, -C1253
6	84042949	1	ELECTRONIC UNIT, CONTROL, Ultrasoon, -C1253
7	84041852	1	CONNECTOR, WIRE,
8	84000651	AR	RELAY,
8	84036121	AR	RELAY, Retardation
8	84807239	AR	RELAY, K34/35 K44
9	84042745	1	BOARD, PRINTED CIRCUIT, CPU, -C1032
9	84045661	1	BOARD, PRINTED CIRCUIT, CPU, D1033-
9	84041853	1	BOARD, PRINTED CIRCUIT, CPU, WITH FLEX HEADER ONLY, -C1032
9	84058163	1	BOARD, PRINTED CIRCUIT, CPU, WITH FLEX HEADER ONLY, D1033-
10	84078764	1	BOARD, PRINTED CIRCUIT, Remote (8)
11	84037180	1	BOARD, PRINTED CIRCUIT, Relay (8)
12	9812608	1	PLATE,
13	84045023	1	ELECTRONIC UNIT, CONTROL, EMRD, -C1123
13	84100291	1	ELECTRONIC UNIT, CONTROL, EMRD, -C0074
13	84807861	1	ELECTRONIC UNIT, CONTROL, , D1254-
14	84007586	1	HARNESS, WIRE,
14	84014347	1	HARNESS, WIRE, , WITH FLEX HEADER ONLY
15	84031878	AR	WASHER,
16	84031877	AR	BOLT,
17	84045667	1	BOARD, PRINTED CIRCUIT, , WITH FLEX HEADER ONLY
18	84607102	1	CONVERTER, CAN, FOR TX68 ONLY

ONLY VALID FROM 4813001 (TX62) - 461033001 (TX63) - 4913001 (TX64) - 6613001 (TX65) - 5020001 (TX66) - 4404001 (TX67) - 5120001 (TX68)

07.13(01) ELECTRICAL EQUIPMENT, CENTRAL BOX

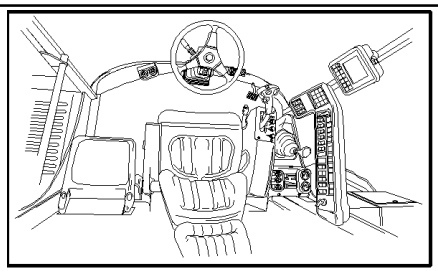

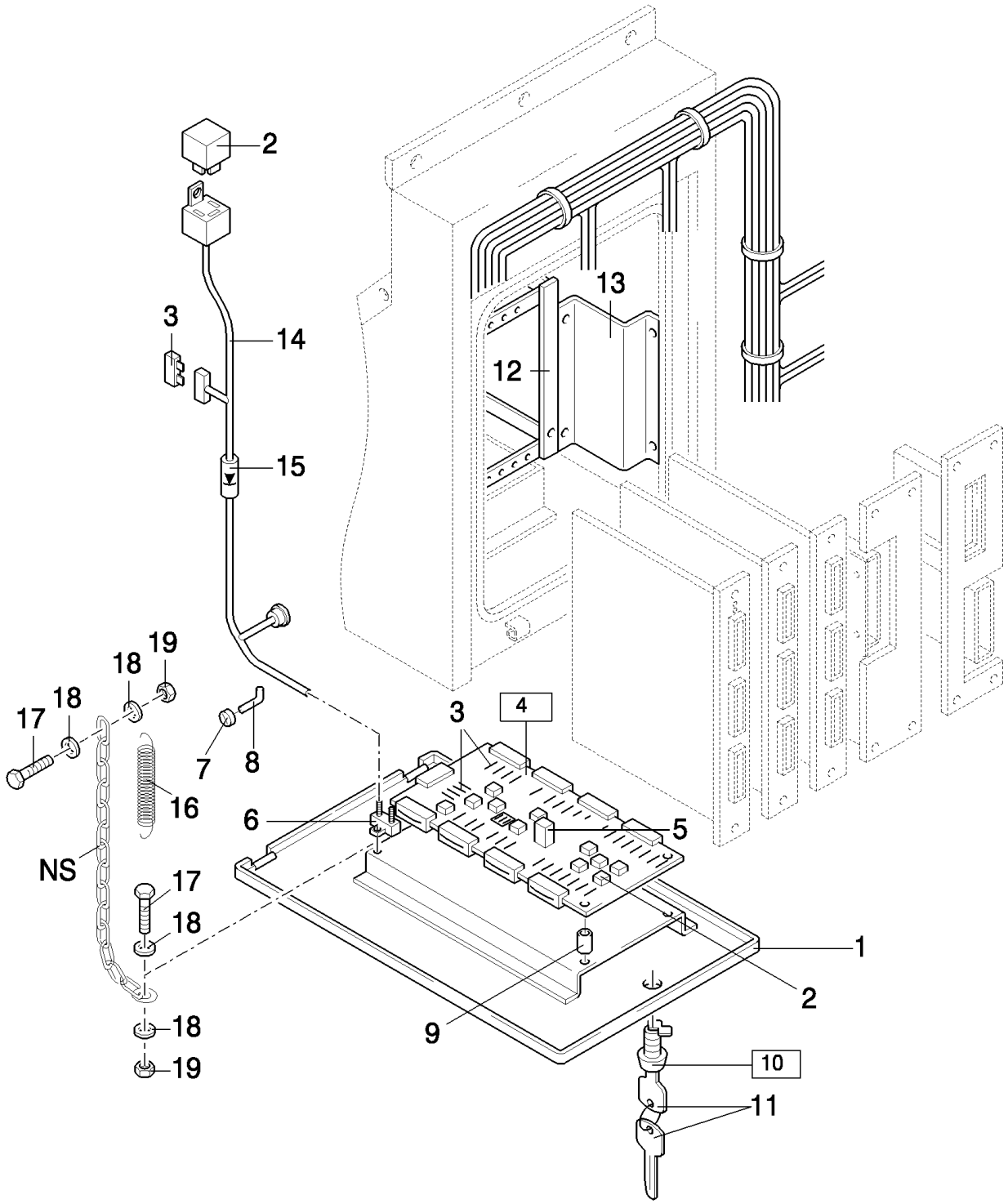

TX68 COMBINE - BASE UNIT

07.13(01) ELECTRICAL EQUIPMENT, CENTRAL BOX

ссылка	Номер детали	Кол-во	Описание
1	9812444	1	DOOR, , FOR TX66-67-68 ONLY, -C4620
1	84001754	1	DOOR, , FOR TX66-67-68 ONLY, -C0053
1	84429779	1	DOOR, , FOR TX66-67-68 ONLY, D1170-
1	84001754	1	DOOR, , FOR TX62-64-65 ONLY, -C1169
1	84429779	1	DOOR, , FOR TX62-64-65 ONLY, D1170-
2	84000651	AR	RELAY,
3	9811773	AR	FUSE, 10A
3	9623774	AR	FUSE, 15A
3	83932926	AR	FUSE, 25A
4	9814595	1	BOARD, PRINTED CIRCUIT, (2,3)
5	9813500	1	FLASHER UNIT,
6	457197	2	FUSE, 40A
7	9833361	2	TAB, LOCKING,
8	9819698	2	PIN,
9	9818991	8	BUSHING,
10	9814881	1	LOCK, (11)
11	84004011	2	KEY, LOCK,
12	9850382	1	PANEL, BOXED,
13	9812622	1	SUPPORT, , FOR TX66-68 ONLY, -C4620
13	84001532	1	SUPPORT, , FOR TX66-67-68 ONLY, -C0053
13	84429780	1	SUPPORT, , FOR TX66-67-68 ONLY, D1170-
13	84001532	1	SUPPORT, , FOR TX62-64-65 ONLY, -C1169
13	84429780	1	SUPPORT, , FOR TX62-64-65 ONLY, D1170-
14	84035976	1	HARNESS, WIRE,
15	84022195	1	DIODE,
16	338713	1	SPRING,
17	120098	2	BOLT, Hex, M5 x 20, 8.8, Full Thd,
18	322356	4	WASHER, 5MM
19	86508813	2	NUT, M5, Cl 8,

07.14(01) LATERAL FLOTATION, INDICATOR AND REVERSING MECHANISM, SWITCHES

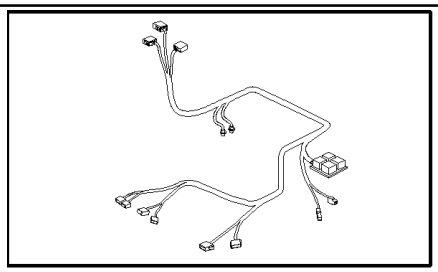

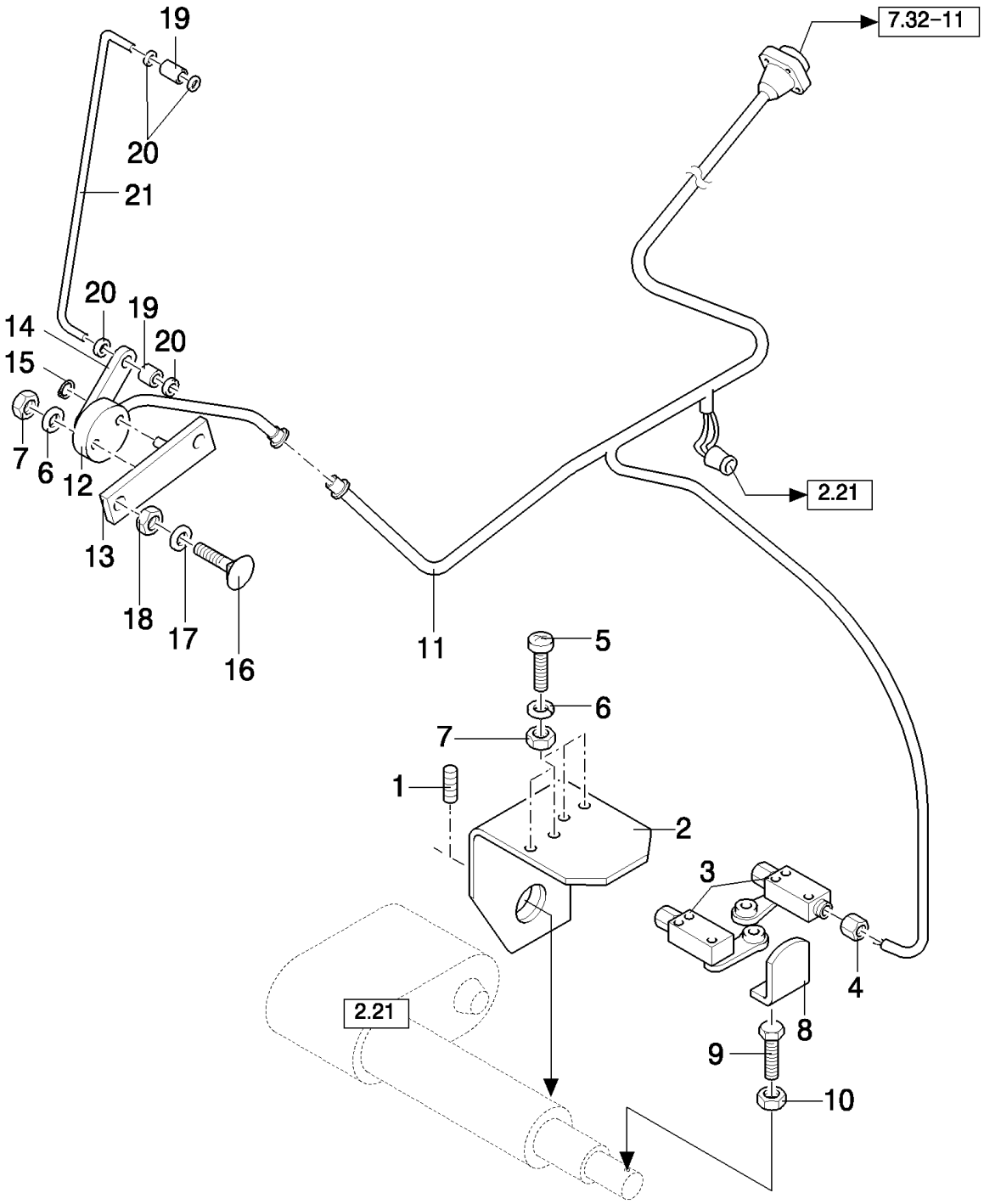

TX68 COMBINE - BASE UNIT

07.14(01) LATERAL FLOTATION, INDICATOR AND REVERSING MECHANISM, SWITCHES

ссылка	Номер детали	Кол-во	Описание
1	300487	1	SET SCREW, Hex Soc, M12 x 16, Cup Pt,
2	84015670	1	SUPPORT,
3	84015509	2	SWITCH ASSY,
4	84000832	2	NUT,
5	84015627	4	SCREW, M5x35
6	322356	6	WASHER, 5MM
7	86508813	6	NUT, M5, Cl 8,
8	84015540	1	ARM,
9	9706693	1	BOLT, Hex, M12 x 60, 8.8,
10	100038	1	NUT, M12 x 1.75, Cl 8,
11	84001419	1	HARNESS, WIRE, , WITH LATERAL FLOTATION
11	84001441	1	HARNESS, WIRE, , WITHOUT LATERAL FLOTATION
12	9594791	1	SENSOR, , WITH LATERAL FLOTATION
13	E6NNT936AA	1	BRACKET, , WITH LATERAL FLOTATION
14	E6NNT933AA	1	LEVER, , WITH LATERAL FLOTATION
15	83981963	1	WASHER, THRUST, M8, , WITH LATERAL FLOTATION
16	86507486	2	BOLT, CARRIAGE, Short NK, M8 x 20, Cl8.8, Full Thd, , WITH LATERAL FLOTATION
17	322358	2	WASHER, SPRING, Belleville, M8, , WITH LATERAL FLOTATION
18	9706690	2	NUT, M8, Cl 8, , WITH LATERAL FLOTATION
19	E6NNT934AA	2	BEARING, NYLON, , WITH LATERAL FLOTATION
20	398561	4	CLIP, , WITH LATERAL FLOTATION
21	9813148	1	ROD, , WITH LATERAL FLOTATION, FOR TX66-67-68 ONLY
21	9813148	1	ROD, , WITH LATERAL FLOTATION, FOR TX64-65 ONLY, -C5410
21	89594824	1	ROD, , FOR TX64-65 ONLY, WITH LATERAL FLOTATION, D5410-
21	9813148	1	ROD, , WITH LATERAL FLOTATION, FOR TX63 ONLY, -C1083
21	89594824	1	ROD, , FOR TX63 ONLY, WITH LATERAL FLOTATION, D1084-

07.15(01) HEADER, HEIGHT INDICATOR

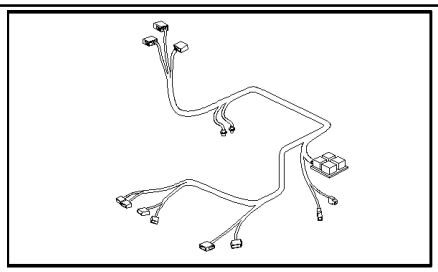

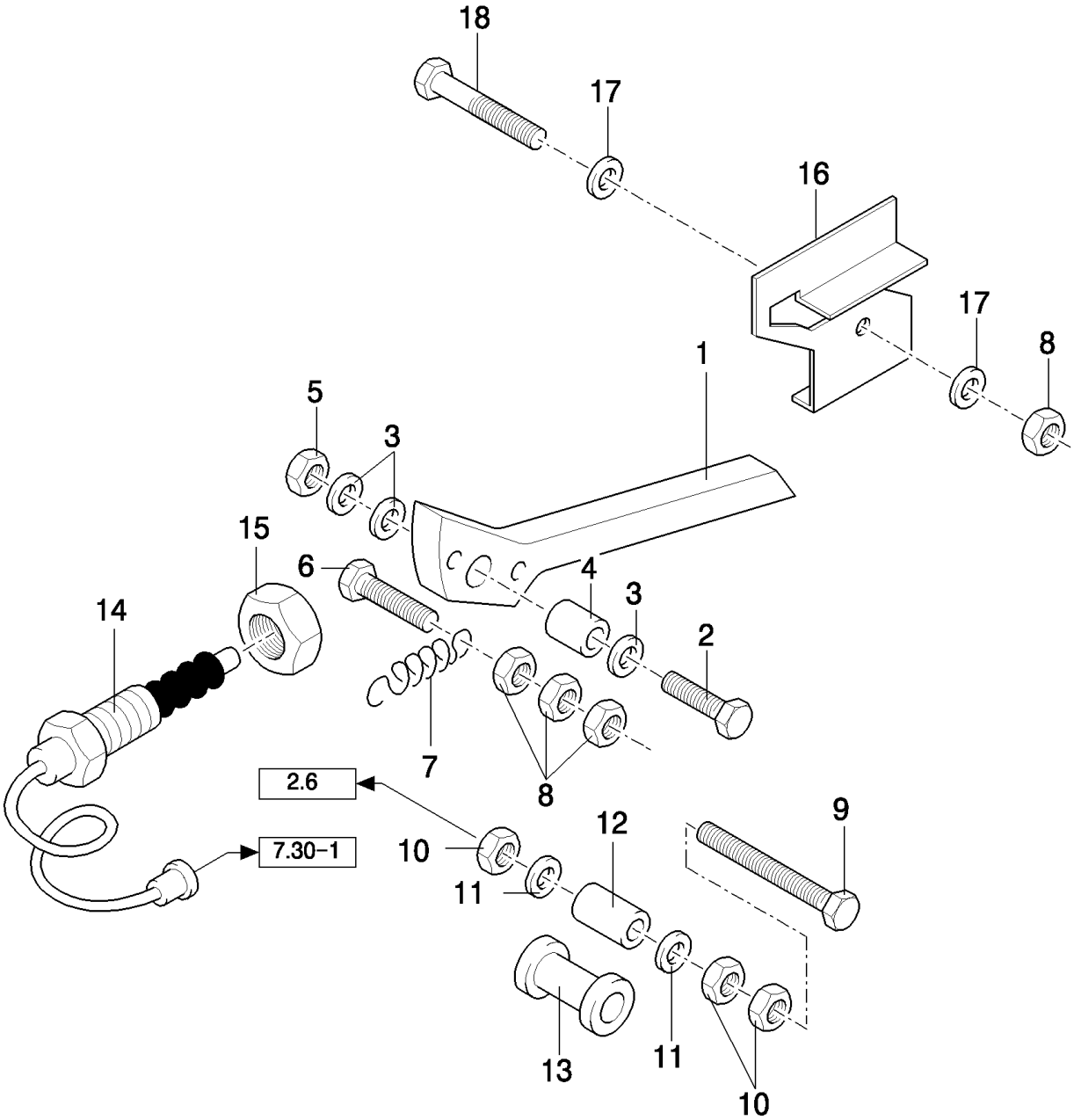

TX68 COMBINE - BASE UNIT

07.15(01) HEADER, HEIGHT INDICATOR

ссылка	Номер детали	Кол-во	Описание
1	84400013	1	CAM, , -C1169
1	84400013	1	CAM, , D1170-
2	120122	1	BOLT, Hex, M12 x 50, 8.8, Full Thd,
3	378245	3	WASHER, M12,
4	9815356	1	BUSHING,
5	323238	1	NUT, Thin, M12 x 1.75, Cl 05, M12
6	120102	1	SCREW, Hex, M6 x 40, 8.8, Full Thd,
7	180071	1	SPRING,
8	15896221	5	NUT, M6, Cl 10,
9	538885	1	BOLT, Hex, M10 x 90, 8.8, Full Thd, M10x90
10	100016	3	NUT, M10, Cl 8,
11	378244	2	WASHER, M10,
12	9815355	1	SPACER,
13	9815357	1	ROLLER,
14	9513732	1	SENSOR,
15	100033	1	NUT, Thin, M24 x 1.5, Cl 04,
16	84432505	1	SUPPORT, , D1170-
17	322357	2	WASHER, SPRING, Belleville, M6, , D1170-
18	397985	1	BOLT, Hex, M6 x 70, 8.8, Full Thd, , D1170-
18	412499	1	BOLT, Hex, M6 x 100, 8.8, Full Thd, M6x100, D1214-

07.16(01) CABLES, HORIZONTAL REEL ADJUSTMENT, "ULTRA-SONIC" AND VERTICAL KNIVES

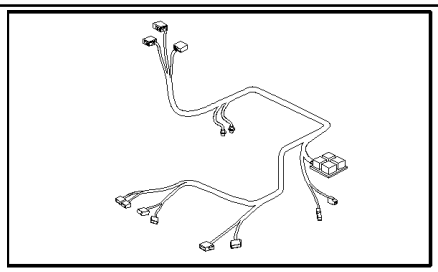

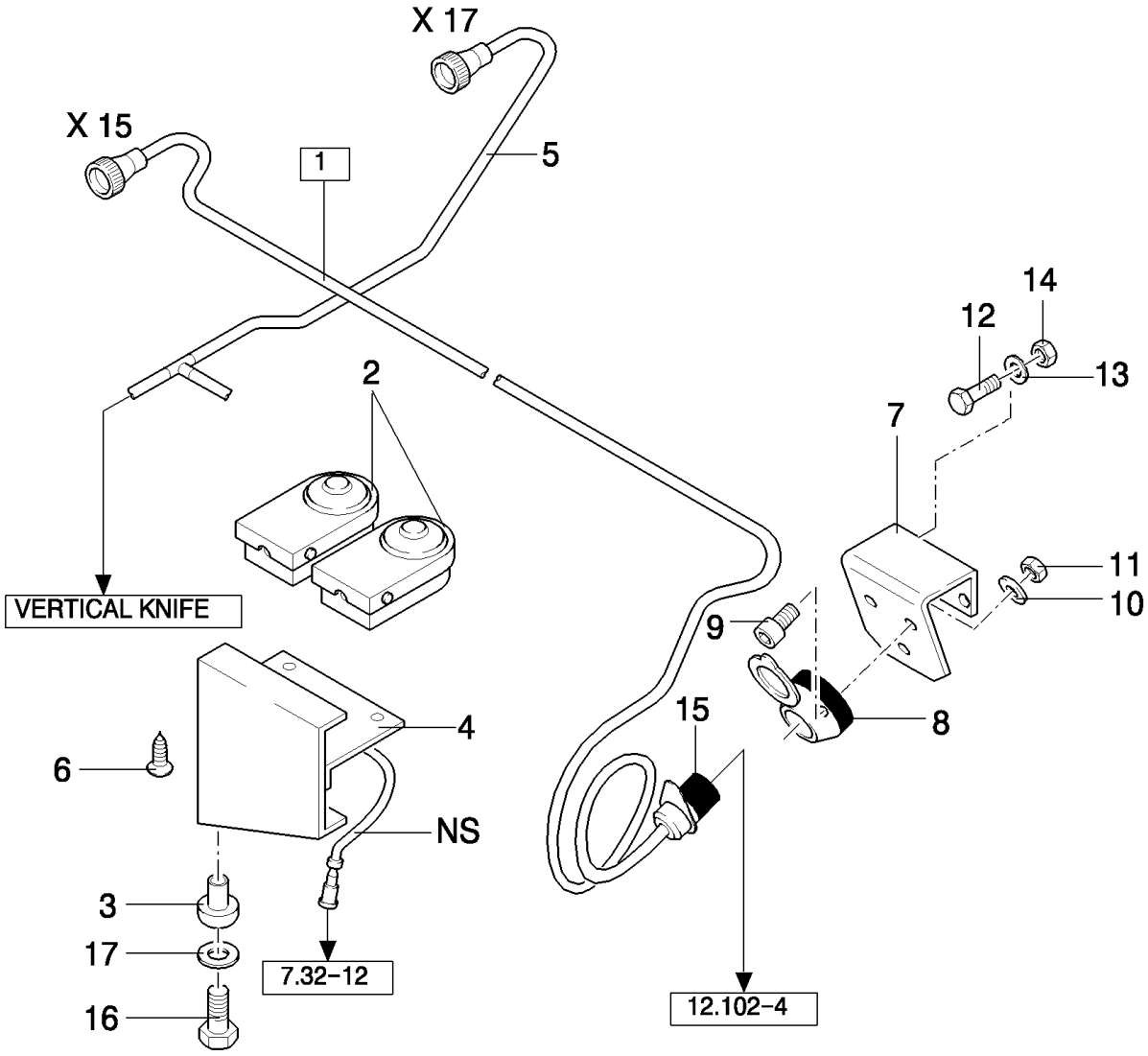

TX68 COMBINE - BASE UNIT

07.16(01) CABLES, HORIZONTAL REEL ADJUSTMENT, "ULTRA-SONIC" AND VERTICAL KNIVES

ссылка	Номер детали	Кол-во	Описание
1	84001506	1	HARNESS, WIRE, (15), FOR TX66-67-68 ONLY
1	84001461	1	HARNESS, WIRE, (15), FOR TX62-63-64-65 ONLY
2	9833626	2	PEDAL,
3	353068	2	NUT, , -C1245
4	84001175	1	SUPPORT, , -C1245
5	84001844	1	HARNESS, WIRE, , ACCESSORY
6	9850737	4	SCREW, , -C1245
7	84007675	1	SUPPORT,
8	84007468	1	PLUG,
9	120202	3	SCREW, Cross Pan Hd, M4 x 30,
10	322355	3	WASHER, Belleville, M4,
11	100012	3	NUT, M4, Cl 8,
12	80120099	2	BOLT, Hex, M6 x 16, 8.8,
13	322357	2	WASHER, SPRING, Belleville, M6,
14	15896221	2	NUT, M6, Cl 10,
15	84007467	1	CONNECTOR, HYD.,
16	120100	3	BOLT, Hex, M6 x 20, 8.8,
17	140040	3	WASHER, M6 x 22 x 2,

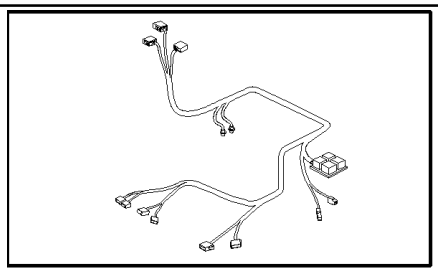

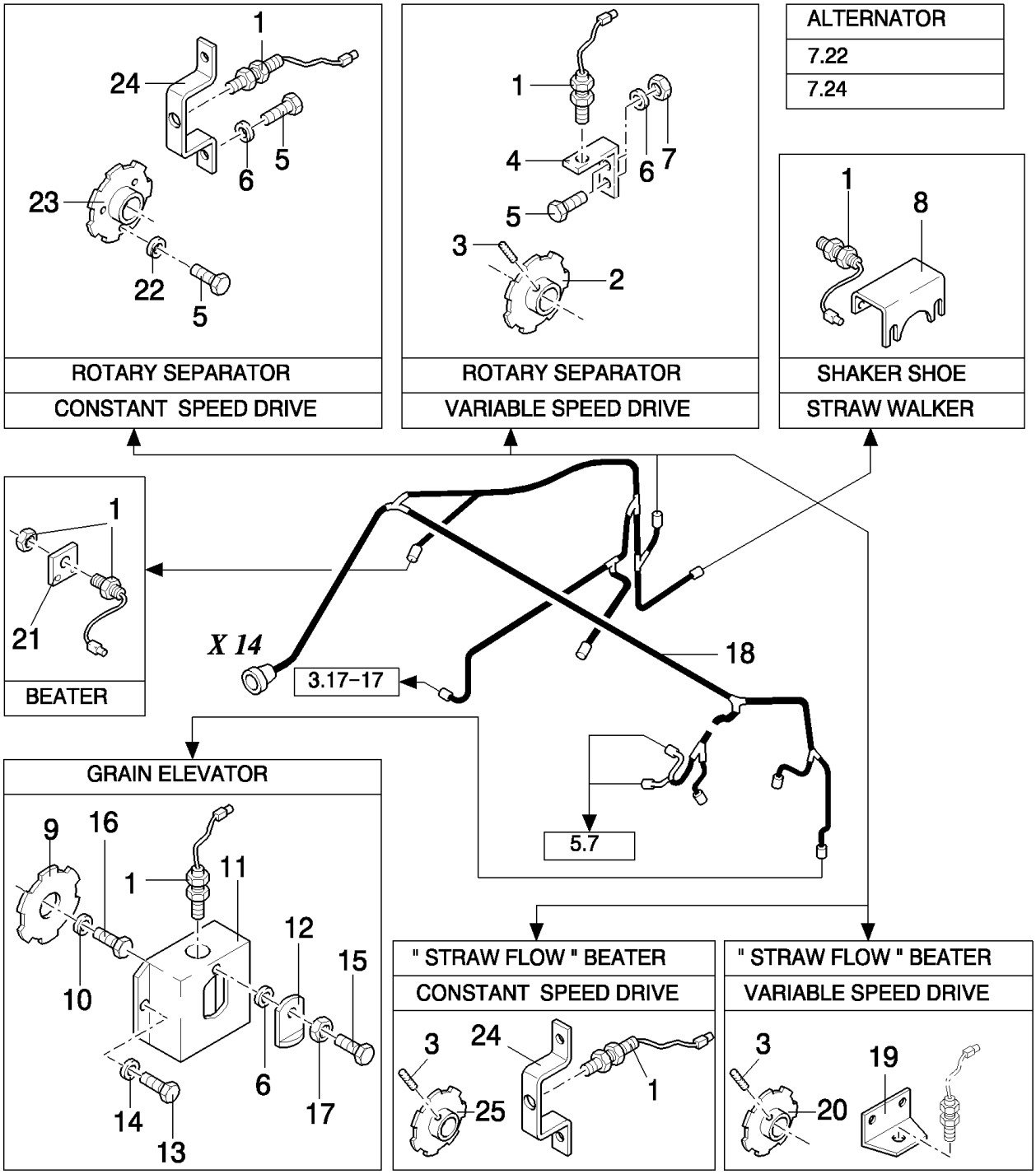
ROTARY SEPARATOR
CONSTANT SPEED DRIVE
ROTARY SEPARATOR
VARIABLE SPEED DRIVE
ALTERNATOR
7.22
7.24
SHAKER SHOE
STRAW WALKER
BEATER
X 14
3.17-17
18
5.7
GRAIN ELEVATOR
" STRAW FLOW " BEATER
CONSTANT SPEED DRIVE
" STRAW FLOW " BEATER
VARIABLE SPEED DRIVE

TX68 COMBINE - BASE UNIT

07.17(01) R.P.M. SENSORS

ссылка	Номер детали	Кол-во	Описание
1	84056992	4	SENSOR,
2	9819667	1	DISC,
3	300482	2	SET SCREW, Hex Soc, M10 x 20, Cone Pt,
4	84037474	1	BRACKET,
5	120100	AR	BOLT, Hex, M6 x 20, 8.8,
6	140015	AR	WASHER, 6MM
7	15896221	1	NUT, M6, Cl 10,
8	84100829	1	BRACKET,
9	9819468	1	DISC,
10	378244	1	WASHER, M10,
11	84007721	1	SHIELD,
12	395187	1	COVER,
14	322358	2	WASHER, SPRING, Belleville, M8,
15	80120099	1	BOLT, Hex, M6 x 16, 8.8,
16	43138	1	SCREW, Hex, M10 x 20, 8.8, Full Thd,
17	353308	1	NUT, M6 x 1, Cl 8,
18	9812331	1	HARNESS, WIRE, , FOR TX66-68 ONLY, -C6405
18	84035184	1	HARNESS, WIRE, , FOR TX66-67-68 ONLY, D6405-
18	84001424	1	HARNESS, WIRE, , FOR TX62-64-65 ONLY, -C6405
18	84035190	1	HARNESS, WIRE, , FOR TX62-63-64-65 ONLY, D6405-
19	84037717	1	BRACKET,
20	84037718	1	DISC,
21	84057493	1	BRACKET,
22	412649	2	WASHER, SPRING, Belleville, M6,
23	84037858	1	DISC,
24	84057486	1	BRACKET,
25	84041344	1	DISC,
13	16043224	2	BOLT, Hex, M8 x 16, 8.8, Full Thd,

07.18(01) R.P.M. SENSORS

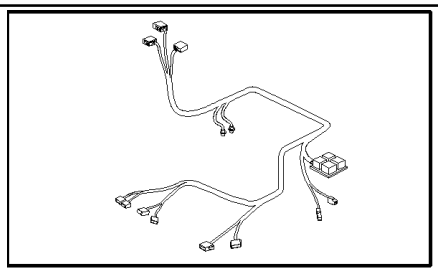

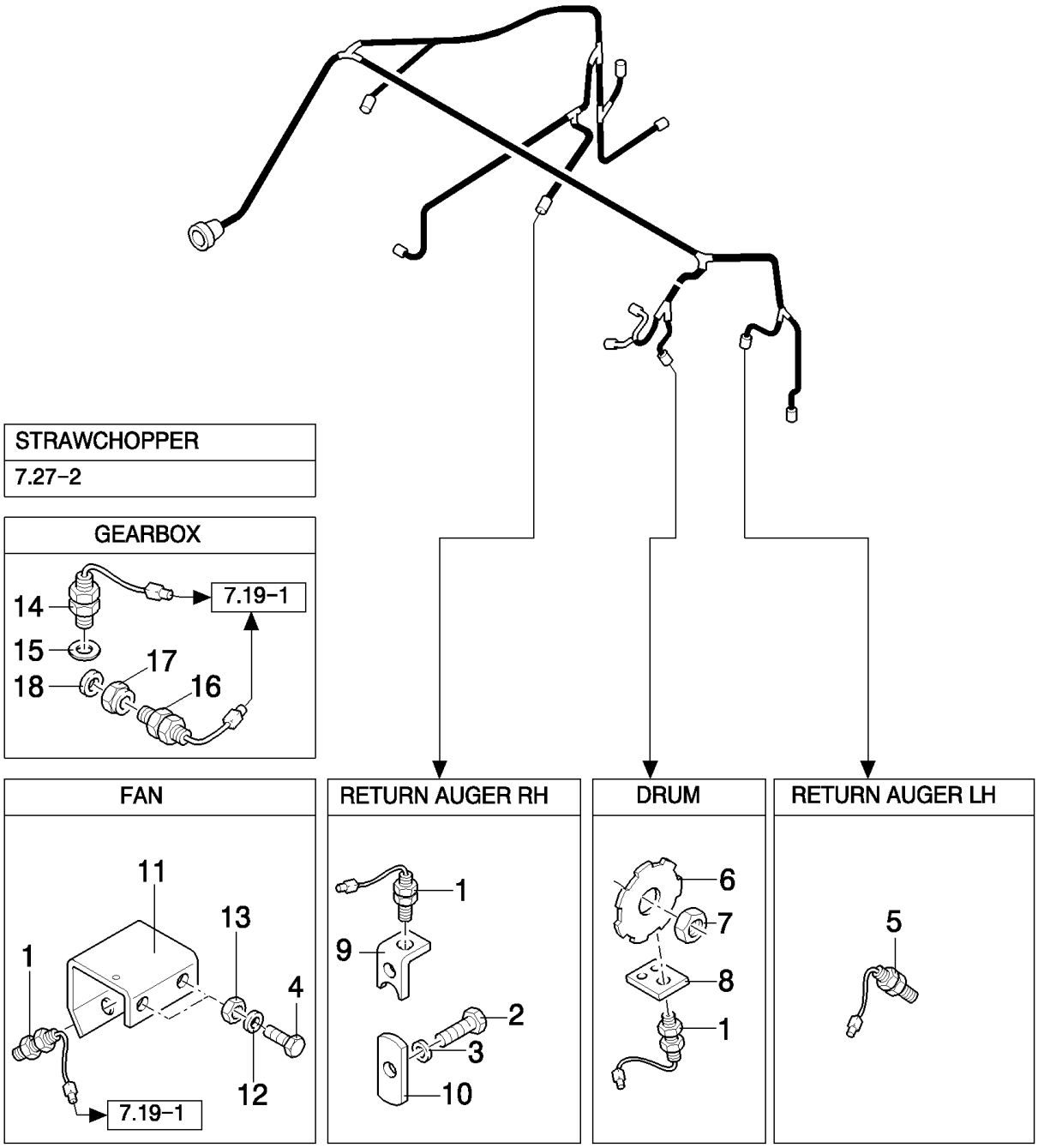

TX68 COMBINE - BASE UNIT

07.18(01) R.P.M. SENSORS

ссылка	Номер детали	Кол-во	Описание
1	84056992	3	SENSOR, , FOR TX66-67-68 ONLY
1	84036826	2	SENSOR, , FOR TX62-63-64-65 ONLY
2	120100	1	BOLT, Hex, M6 x 20, 8.8, , FOR TX66-67-68 ONLY
3	378244	1	WASHER, M10, , FOR TX66-67-68 ONLY
4	80120099	2	BOLT, Hex, M6 x 16, 8.8,
5	84056993	1	SENSOR,
6	84000373	1	DISC,
7	100034	1	NUT, M30 x 1.5, Cl 8,
8	84037471	1	BRACKET,
9	84038302	1	BRACKET, , FOR TX66-67-68 ONLY
10	9819618	1	PLATE, , FOR TX66-67-68 ONLY
11	84037476	1	BRACKET, , FOR TX66-68 ONLY, -C6405
11	84043556	1	BRACKET, , FOR TX66-67-68 ONLY, D6405-
11	84037475	1	BRACKET, , FOR TX62-64-65 ONLY, -C6405
11	84043557	1	BRACKET, , FOR TX62-63-64-65 ONLY, D6405-
12	322357	2	WASHER, SPRING, Belleville, M6,
13	15896221	2	NUT, M6, Cl 10,
14	84056991	1	SENSOR,
15	355607	1	SEALRING,
16	84037941	1	SENSOR,
17	84031322	1	CONNECTOR, HYD.,
18	355607	1	SEALRING,

07.19(01) ELECTRICITY, SELF-LEVELLING

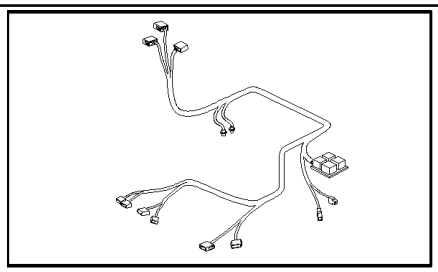

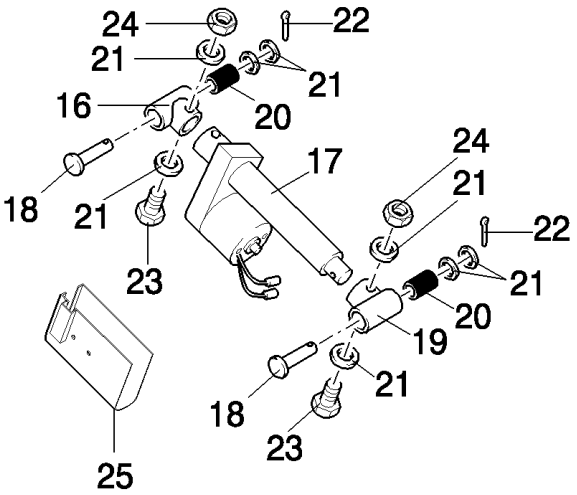

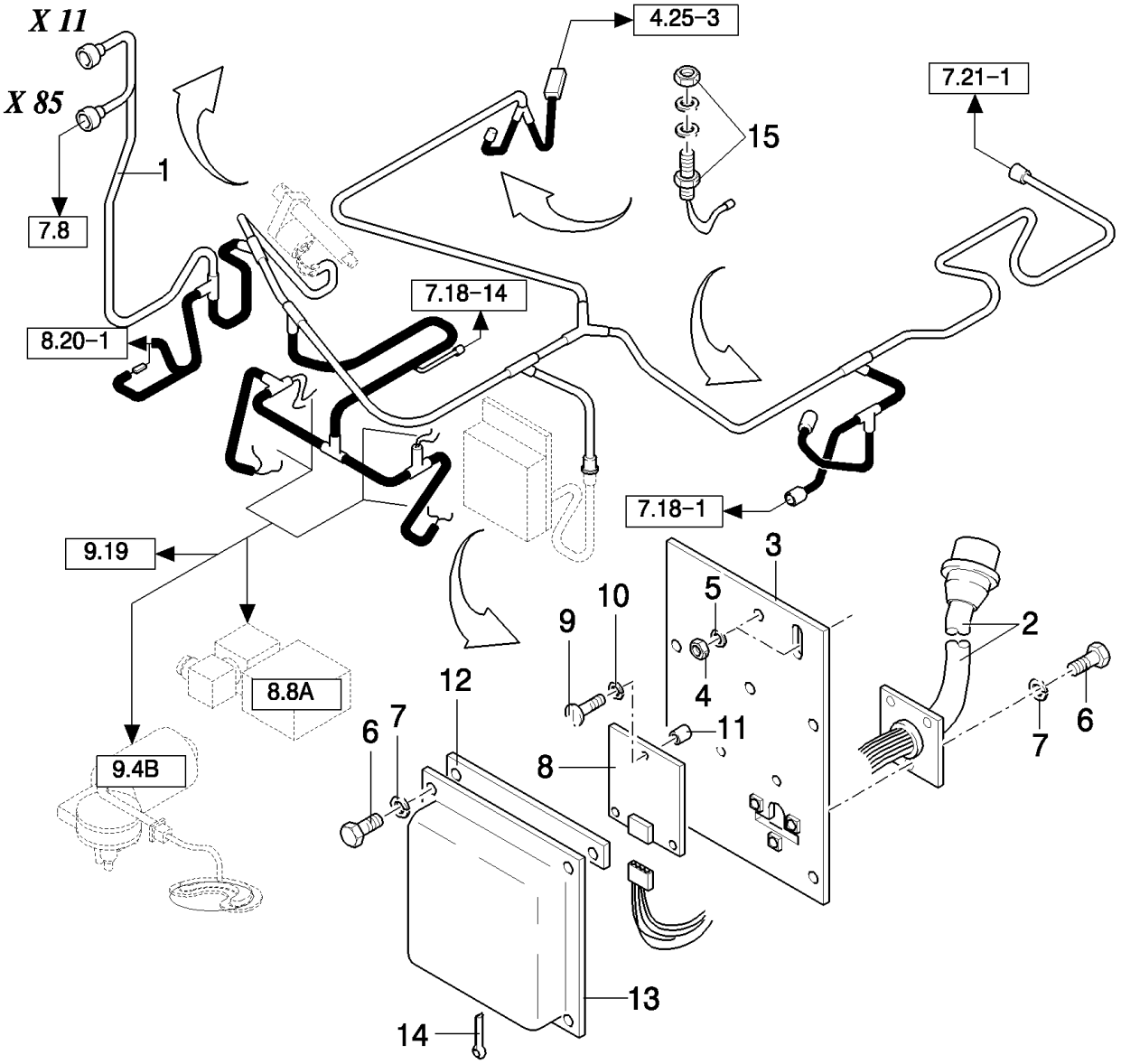

TX68 COMBINE - BASE UNIT

07.19(01) ELECTRICITY, SELF-LEVELLING

ссылка	Номер детали	Кол-во	Описание
1	9812311	1	HARNESS, WIRE, , FOR TX66-68 ONLY, -C5500
1	84002587	1	HARNESS, WIRE, , FOR TX66-68 ONLY, D5500-
1	84001458	1	HARNESS, WIRE, , WITH COMPENSATION FOR TX62 ONLY, FOR TX62-64-65 ONLY, -C5500
1	84002594	1	HARNESS, WIRE, , FOR TX62-63-64-65 ONLY, WITH COMPENSATION FOR TX62 ONLY, D5500-
1	84001468	1	HARNESS, WIRE, , WITHOUT COMPENSATION, FOR TX62 ONLY, -C5500
1	84002597	1	HARNESS, WIRE, , FOR TX62 ONLY, WITHOUT COMPENSATION, D5500-
1	84002426	1	HARNESS, WIRE, , FOR GRASS SEED ONLY
1	84035297	1	HARNESS, WIRE, , FOR TX67 ONLY, -C1076
1	84064656	1	HARNESS, WIRE, , FOR TX67 ONLY, D1077-
2	9812312	1	HARNESS, WIRE,
3	84000862	1	PLATE,
4	86629542	2	NUT, LOCK, M8 x 1.25, Cl 8,
5	378243	2	WASHER, M8,
6	80120099	7	BOLT, Hex, M6 x 16, 8.8,
7	322357	7	WASHER, SPRING, Belleville, M6,
8	9814597	1	BOARD, PRINTED CIRCUIT,
9	86511824	3	SCREW, Cross Pan Hd, M4 x 20, M4x16
10	322355	3	WASHER, Belleville, M4,
11	448516	3	SPACER,
12	440782	4	ELEMENT, SEALING,
13	439559	1	COVER,
14	130006	1	PIN, SPLIT (COTTER), M4 x 20,
15	84056994	2	SENSOR,
16	753565	1	CLAMP,
17	918214	1	ACTUATOR,
18	412118	2	PIN, CLEVIS, M12 x 65,
19	921250	1	CLAMP,
20	445913	2	BUSHING, RUBBER,
21	378245	AR	WASHER, M12,
22	130004	2	PIN, SPLIT (COTTER), M3.2 x 25,
23	9706693	2	BOLT, Hex, M12 x 60, 8.8,
24	100038	2	NUT, M12 x 1.75, Cl 8,
25	9835714	1	COVER,

07.20(01) ELECTRICITY, FIXED SHOE

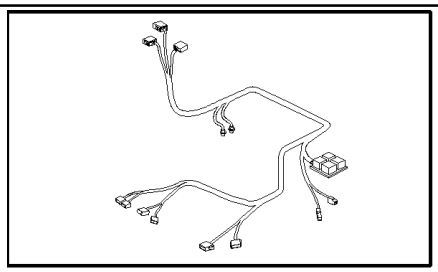

STRAW ELEVATOR

FRAME

2

7 6 5 4

X 11

X 85

4.25-3

3

7.21-1

1

FRAME

7.8

8

9

7.18-14

BATTERY

2.22-1

9.19

8.8A

9.4B

WITH COMP. 8.8-1

TX68 COMBINE - BASE UNIT

07.20(01) ELECTRICITY, FIXED SHOE

ссылка	Номер детали	Кол-во	Описание
1	84001420	1	HARNESS, WIRE, , FOR MACHINES WITH COMPENSATION, -C5500
1	84002600	1	HARNESS, WIRE, , FOR MACHINES WITH COMPENSATION, FOR TX62-64-65 ONLY, D5500-
1	84001641	1	HARNESS, WIRE, , FOR MACHINES WITH COMPENSATION, FOR TX66-68 ONLY, D5500-
1	84001471	1	HARNESS, WIRE, , FOR TX62 ONLY, FOR MACHINES WITHOUT COMPENSATION, -C5500
1	84002601	1	HARNESS, WIRE, , FOR MACHINES WITHOUT COMPENSATION, FOR TX62 ONLY, D5500-
1	84035317	1	HARNESS, WIRE, , FOR TX67 ONLY, -C1076
1	84064659	1	HARNESS, WIRE, , FOR TX67 ONLY, D1077-
2	9838919	1	HARNESS, WIRE, , FOR TX62 ONLY
3	84017271	1	BRACKET, , FOR TX62 ONLY
4	120100	AR	BOLT, Hex, M6 x 20, 8.8,
5	140015	AR	WASHER, 6MM
6	322357	AR	WASHER, SPRING, Belleville, M6,
7	15896221	AR	NUT, M6, Cl 10,
8	84017463	1	HARNESS, WIRE, , FOR TX62 ONLY, -C1032
8	84053166	1	HARNESS, WIRE, , FOR TX62 ONLY, D1033-
9	84015279	1	HARNESS, WIRE, , FOR TX62 ONLY

07.21(01) PERFORMANCE DETECTORS

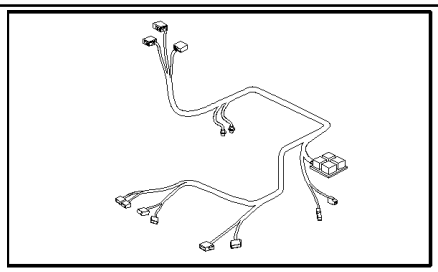

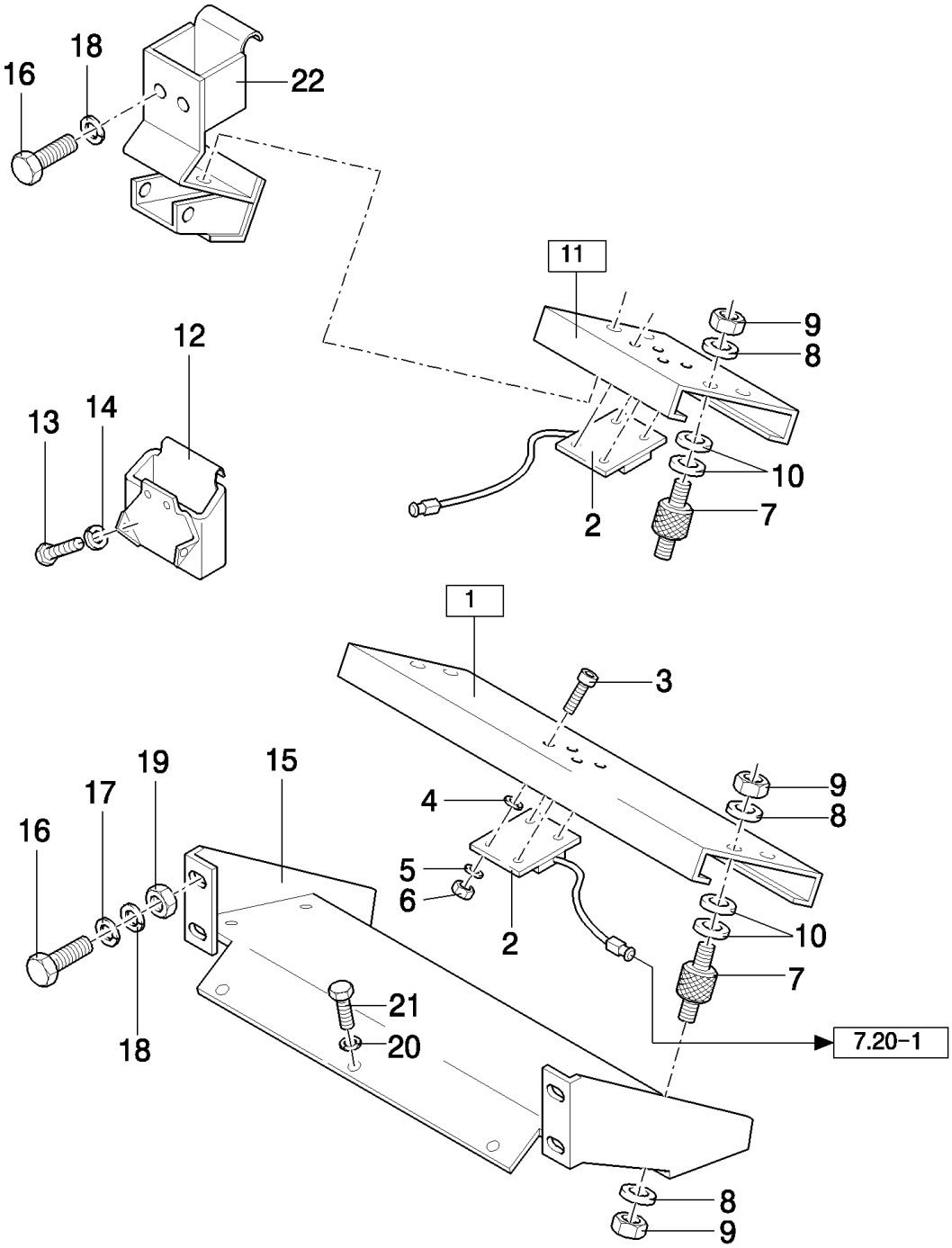

TX68 COMBINE - BASE UNIT

07.21(01) PERFORMANCE DETECTORS

ссылка	Номер детали	Кол-во	Описание
1	84000253	1	DETECTOR, (2 to 10), FOR TX66-67-68 ONLY
1	84000254	1	DETECTOR, (2 to 10), FOR TX62-63-64-65 ONLY
2	84000257	3	SENSOR,
3	89819756	8	SCREW, M4x8
4	140013	8	WASHER, M4,
5	322355	8	WASHER, Belleville, M4,
6	100012	8	NUT, M4, Cl 8,
7	9513734	8	SILENTBLOC,
8	322357	16	WASHER, SPRING, Belleville, M6,
9	15896221	16	NUT, M6, Cl 10,
10	140015	16	WASHER, 6MM
11	84017051	2	DETECTOR, (2 to 10)
12	9509508	6	BOX, , FOR TX66-68 ONLY, -C4620
13	80120099	24	BOLT, Hex, M6 x 16, 8.8, , -C4620
14	412649	24	WASHER, SPRING, Belleville, M6, , -C4620
15	9509550	1	SUPPORT, , FOR TX66-67-68 ONLY
15	9509551	1	SUPPORT, , FOR TX62-63-64-65 ONLY
16	120104	4	SCREW, Hex, M8 x 20, 8.8,
17	378243	4	WASHER, M8,
18	322358	3	WASHER, SPRING, Belleville, M8,
19	9706690	4	NUT, M8, Cl 8,
20	322358	4	WASHER, SPRING, Belleville, M8,
22	84017737	2	HOLDER,
21	16043224	3	BOLT, Hex, M8 x 16, 8.8, Full Thd,

07.22(01) ELECTRICAL EQUIPMENT FOR IVECO ENGINE

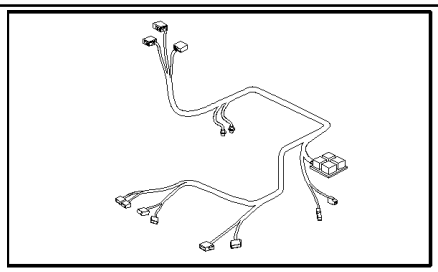

WATER THERMO SWITCH

TEMP.SENDER

ALTERNATOR & R.P.M. INDICATOR

OIL PRESSURE

OIL-THERMO SWITCH

GASACTUATOR

1.24

6.13

1.15

7.25

0.36.0

7.27

7.29

7.36

7.37

9.55

8.3-7

8.8

X 18

X 16

ONLY VALID UNTIL --1076999 (NOT FOR TX68PLUS)

TX68 COMBINE - BASE UNIT

07.22(01) ELECTRICAL EQUIPMENT FOR IVECO ENGINE

ссылка	Номер детали	Кол-во	Описание
1	84001023	1	HARNESS, WIRE, , NOT FOR TX68PLUS
1	84035637	1	HARNESS, WIRE, , FOR TX68PLUS ONLY
2	220104	1	SEALRING,
3	84043512	1	SWITCH, TEMPERATURE,
4	84031916	1	SWITCH, TEMPERATURE,
5	220025	1	SEALRING,
6	84014678	1	CONNECTOR, HYD.,
7	84056991	1	SENSOR,
8	220049	1	WASHER, SEALING,
9	84021583	1	SWITCH, PRESSURE, , -C1052
9	84053657	1	SWITCH, PRESSURE, , D1053-
10	9838063	1	SENDER UNIT,
11	84000077	1	SUPPORT, , NOT FOR TX68PLUS
11	84039187	1	SUPPORT, , FOR TX68PLUS ONLY
12	220104	1	SEALRING, , NOT FOR TX68PLUS
13	84022413	1	SUPPORT, , FOR TX68PLUS ONLY

ONLY VALID UNTIL --1076999 (NOT FOR TX68PLUS)

07.23(01) ELECTRICAL EQUIPMENT FOR IVECO ENGINE

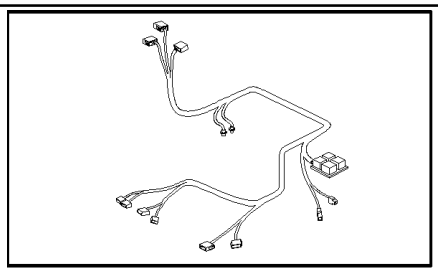

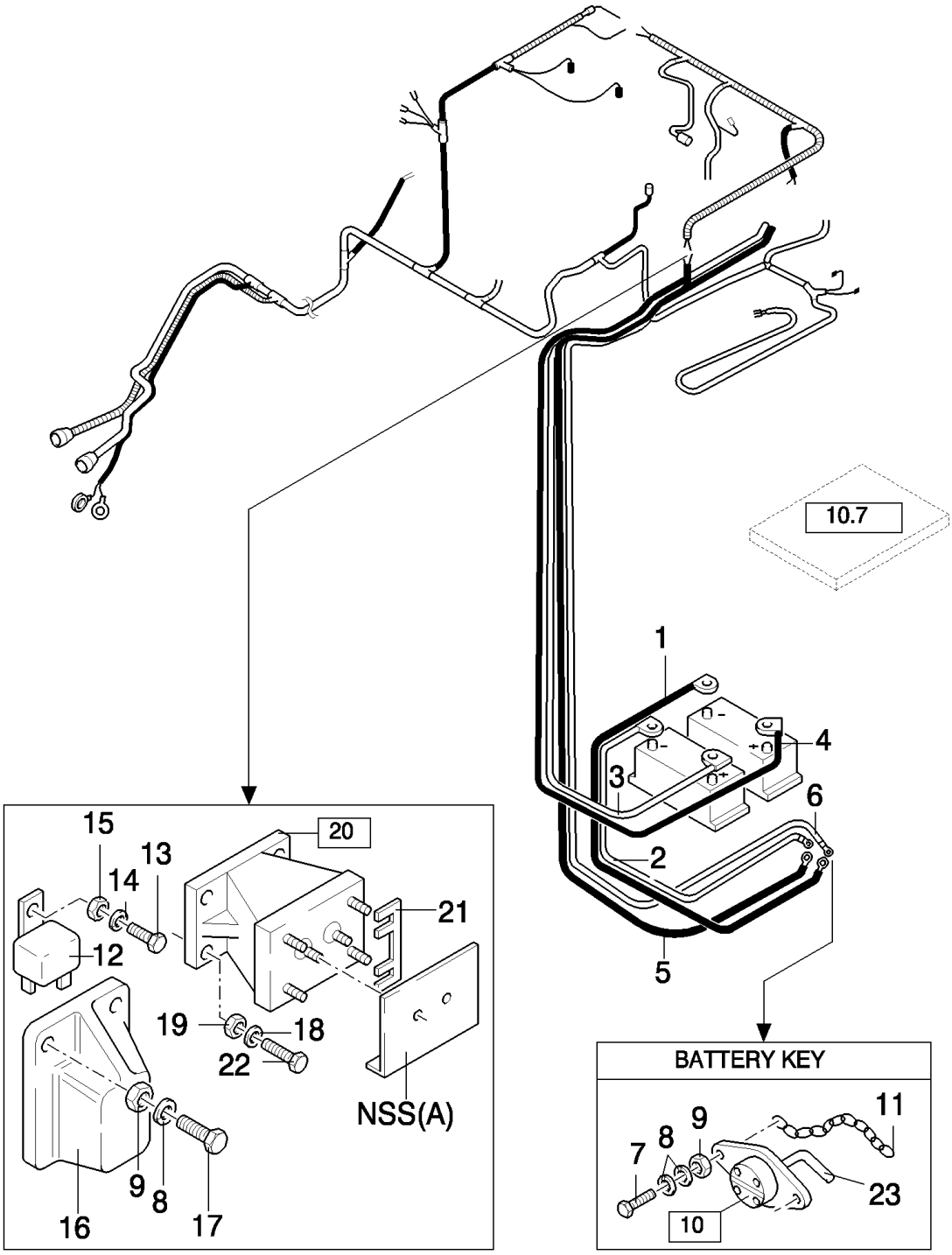

ONLY VALID UNTIL --1076999 (NOT FOR TX68PLUS)

TX68 COMBINE - BASE UNIT

07.23(01) ELECTRICAL EQUIPMENT FOR IVECO ENGINE

ссылка	Номер детали	Кол-во	Описание
1	84004376	1	CABLE, Negatif, Black
2	84007310	1	CABLE, Negatif, Yellow
3	84000676	1	CABLE, Positif, Yellow
4	84000675	1	CABLE, Positif, Black
5	84007309	1	CABLE,
6	84000677	1	CABLE,
7	120100	1	BOLT, Hex, M6 x 20, 8.8,
8	322357	7	WASHER, SPRING, Belleville, M6,
9	15896221	4	NUT, M6, Cl 10,
10	84005283	1	BATTERY CUT-OUT, (23)
11	539289	1	CHAIN,
12	84000651	1	RELAY,
13	120098	1	BOLT, Hex, M5 x 20, 8.8, Full Thd,
14	322356	1	WASHER, 5MM
15	86508813	1	NUT, M5, Cl 8,
16	84000369	1	COVER,
17	80120099	2	BOLT, Hex, M6 x 16, 8.8,
18	322358	3	WASHER, SPRING, Belleville, M8,
19	9706690	3	NUT, M8, Cl 8,
20	389120	1	RELAY, (21,A)
21	420580	4	PLATE, Fuse - 80 Amp
22	43128	3	BOLT, Hex, M8 x 30, 8.8,
23	84607500	1	KEY, LOCK,

ONLY VALID UNTIL --1076999 (NOT FOR TX68PLUS)

07.24(01) ELECTRICAL EQUIPMENT FOR NH675 ENGINE

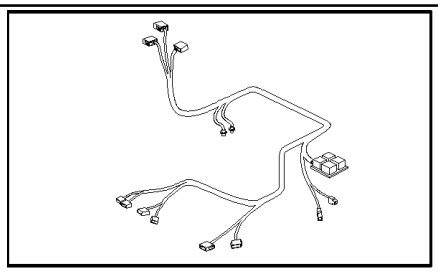

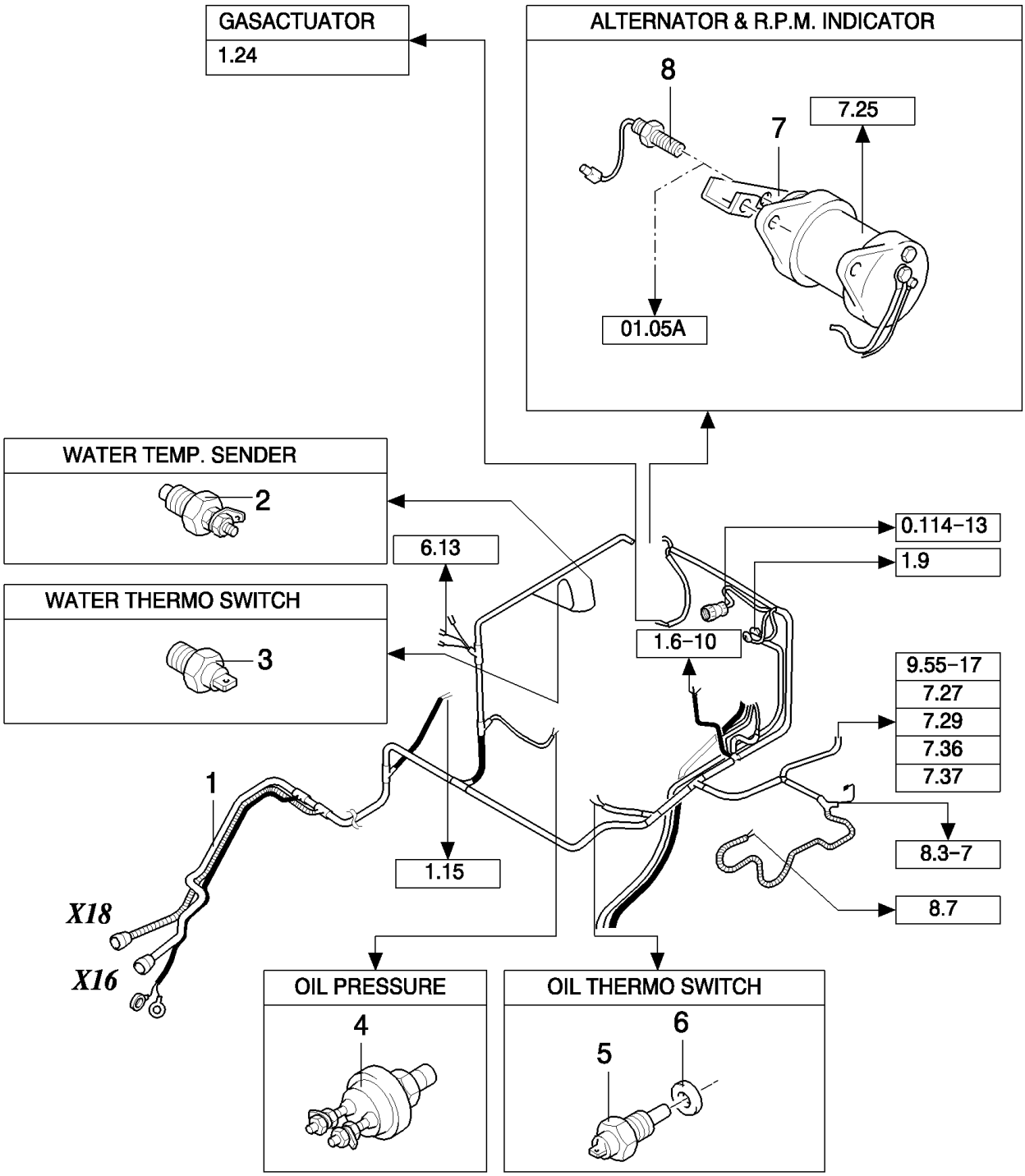

ONLY VALID FROM --1077001 (NOT FOR TX68PLUS)

TX68 COMBINE - BASE UNIT

07.24(01) ELECTRICAL EQUIPMENT FOR NH675 ENGINE

ссылка	Номер детали	Кол-во	Описание
1	9812337	1	HARNESS, WIRE, , FOR TX66 ONLY, -C1032
1	84035890	1	HARNESS, WIRE, , FOR TX68 ONLY, -C1265
1	84035890	1	HARNESS, WIRE, , FOR TX66 ONLY, BSN F1033
1	84453810	1	HARNESS, WIRE, , FOR TX66 ONLY, ASN D376
1	84807996	1	HARNESS, WIRE, , FOR TX68 ONLY, BSN F1266
1	84453804	1	HARNESS, WIRE, , FOR TX68 ONLY, ASN D376
1	84001752	1	HARNESS, WIRE, , FOR TX62-64-65 ONLY, -C1032
1	84035877	1	HARNESS, WIRE, , FOR TX62-63-64-65 ONLY, BSN F1033
1	84453808	1	HARNESS, WIRE, , FOR TX62-63-64-65 ONLY, ASN D376
1	84035298	1	HARNESS, WIRE, , FOR TX67 ONLY, BSN C375
1	84453807	1	HARNESS, WIRE, , FOR TX67 ONLY, ASN D376
2	322512	1	SENDER UNIT, , FOR TX62-64-65-66 ONLY, -C1032
2	84041953	1	SENDER UNIT, , D1030-
3	9817185	1	SWITCH, THERMOGUARD, , FOR TX62-64-65-66 ONLY, -C1032
3	84041954	1	SENDER UNIT, , D1030-
4	372043	1	SWITCH, PRESSURE, , FOR TX62-64-65-66 ONLY, -C1032
4	84053656	1	SWITCH, PRESSURE, , D1030-
5	9818128	1	SENDER UNIT,
6	722441	1	GASKET, , -C6670
6	84038227	1	GASKET, , D6670-
7	84000077	1	SUPPORT, , -C5620
7	84019175	1	SUPPORT, , D5620-
8	84056991	1	SENSOR,

ONLY VALID FROM --1077001 (NOT FOR TX68PLUS)

07.25(01) ALTERNATOR

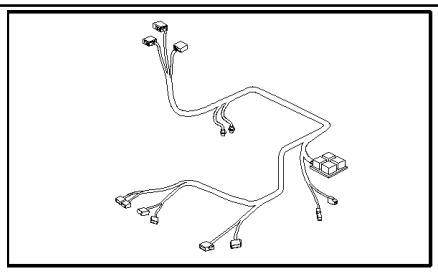

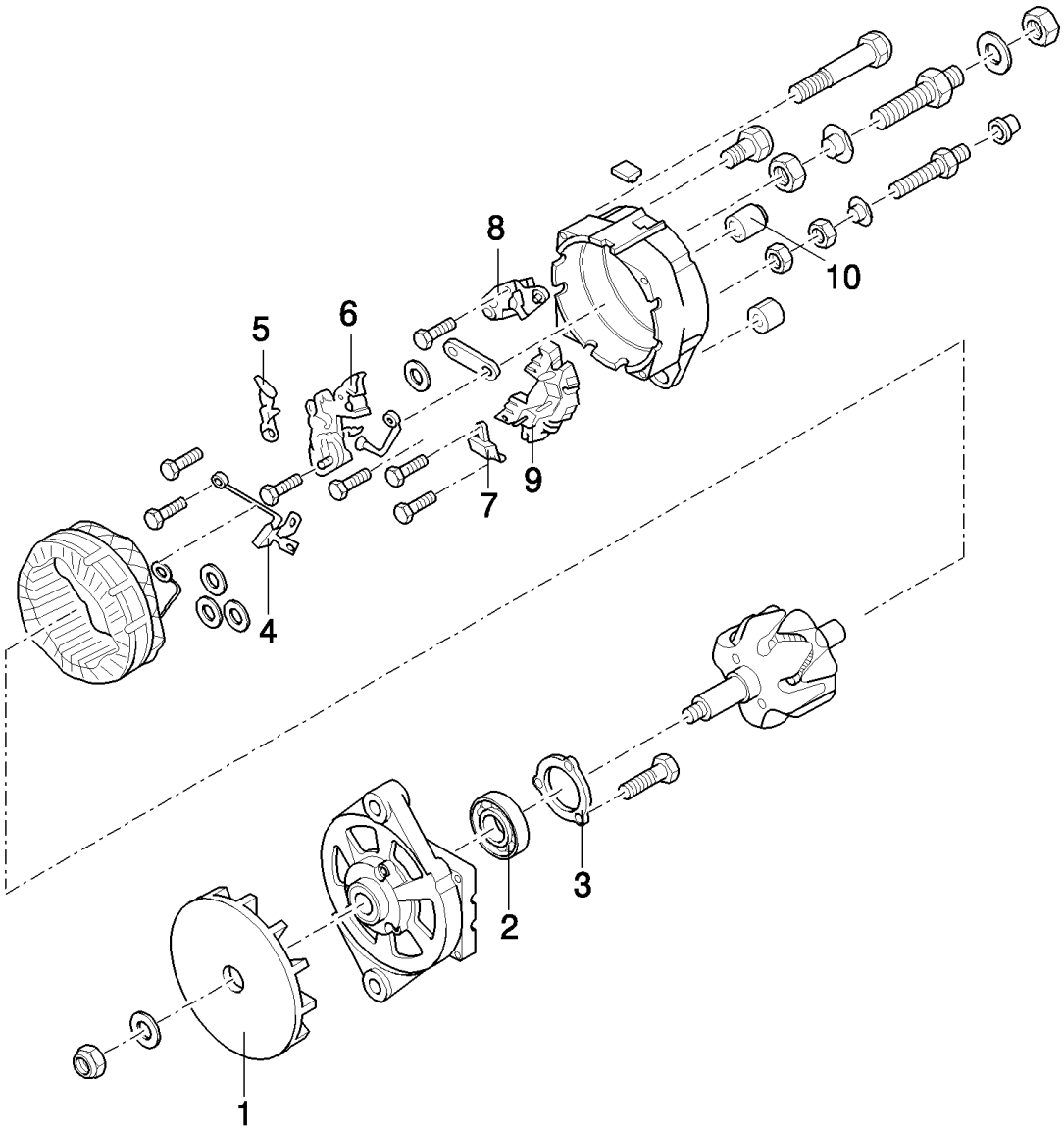

TX68 COMBINE - BASE UNIT

07.25(01) ALTERNATOR

ссылка	Номер детали	Кол-во	Описание
	9705428	1	ALTERNATOR, 130A (1 to 10), DUST FREE
	9833744	1	ALTERNATOR, 135A
1	86507634	1	BLOWER,
2	86507626	1	BEARING, BALL,
3	86507633	1	FLANGE,
4	86507628	1	DIODE,
5	86507632	1	BRUSH,
6	86507631	1	HOLDER,
7	86507630	1	CAPACITOR,
8	86507629	1	REGULATOR, VOLTAGE,
9	86507627	1	RECTIFIER,
10	86507625	1	BUSHING,

07.26(01) ELECTRICAL EQUIPMENT FOR NH675 ENGINE

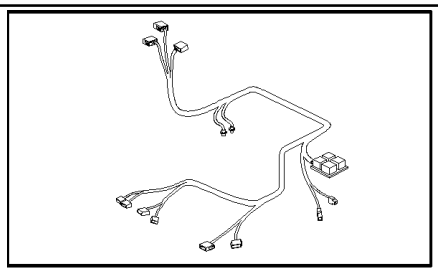

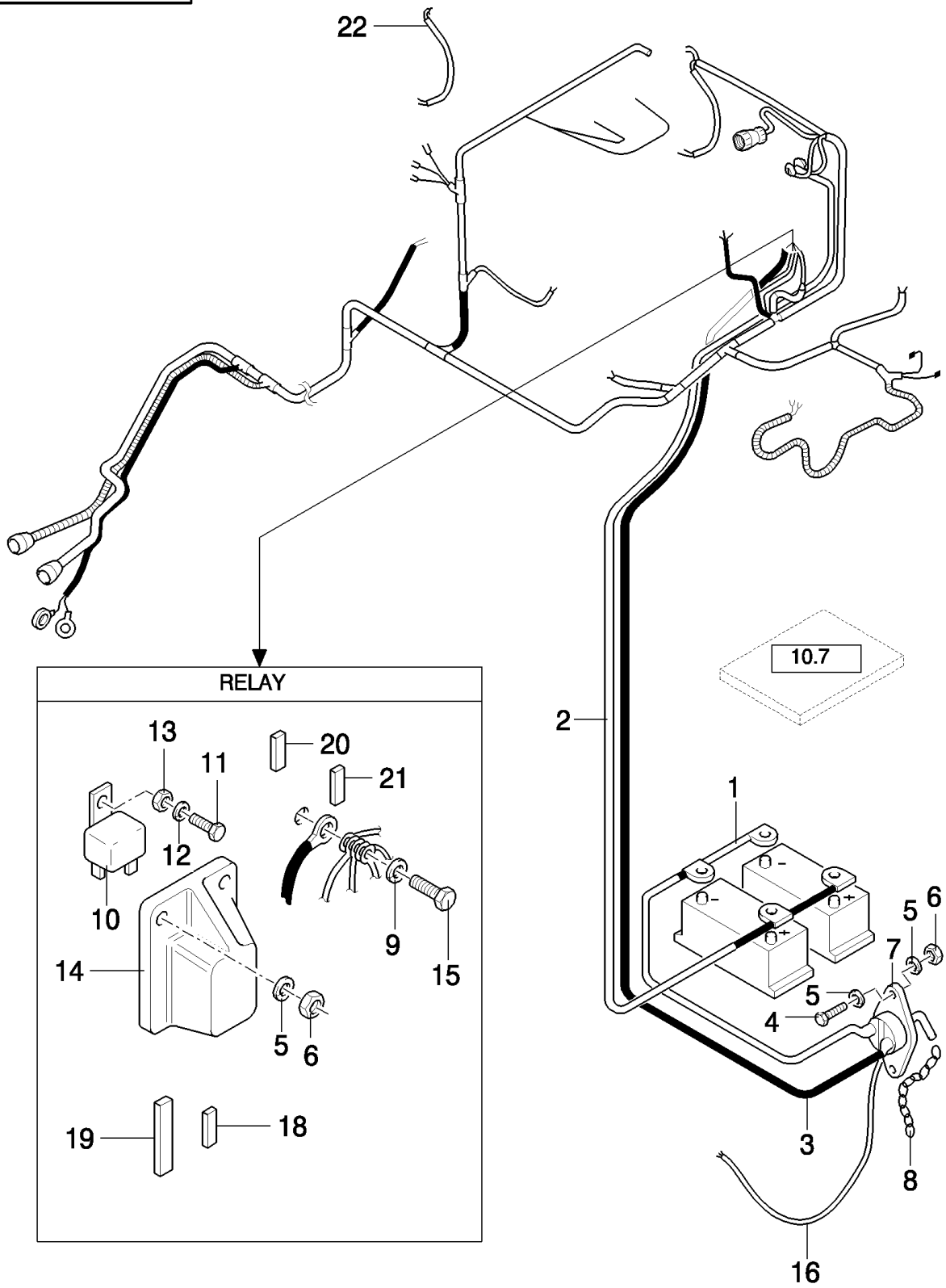

ONLY VALID FROM --1077001 (NOT FOR TX68PLUS)

TX68 COMBINE - BASE UNIT

07.26(01) ELECTRICAL EQUIPMENT FOR NH675 ENGINE

ссылка	Номер детали	Кол-во	Описание
1	9838065	1	CABLE, GROUND, NEGATIF
2	9838066	1	CABLE, ELECTRIC, POSITIF, BSN C375
2	84454034	1	CABLE, GROUND, , ASN D376
3	84004377	1	CABLE, ELECTRIC, NEGATIF
4	120100	1	BOLT, Hex, M6 x 20, 8.8,
5	322357	5	WASHER, SPRING, Belleville, M6,
6	15896221	4	NUT, M6, Cl 10,
7	84004375	1	SWITCH,
8	539289	1	CHAIN,
9	322358	1	WASHER, SPRING, Belleville, M8,
10	84000651	1	RELAY,
11	120098	1	BOLT, Hex, M5 x 20, 8.8, Full Thd,
12	322356	1	WASHER, 5MM
13	86508813	1	NUT, M5, Cl 8,
14	84000369	1	COVER,
15	43128	1	BOLT, Hex, M8 x 30, 8.8,
16	84012276	1	HARNESS, WIRE, RADIO/CLOCK
17	NSS	1	NOT SERVICED SEPARATELY,
18	84806208	2	CONNECTOR, WIRE, , FOR TX68 ONLY
19	84807267	2	CONNECTOR, WIRE, , FOR TX68 ONLY
20	84320118	1	FUSE, , FOR TX68 ONLY
21	84078784	1	FUSE HOLDER, 40A, FOR TX68 ONLY
22	84437673	1	HARNESS, WIRE, , ASN D306

ONLY VALID FROM --1077001 (NOT FOR TX68PLUS)

07.27(01) ELECTRICAL EQUIPMENT, STRAW CHOPPER

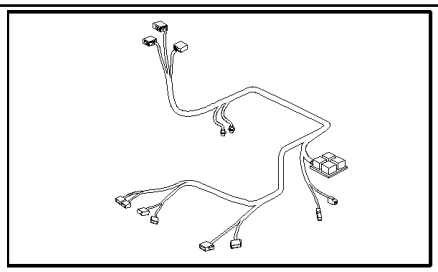

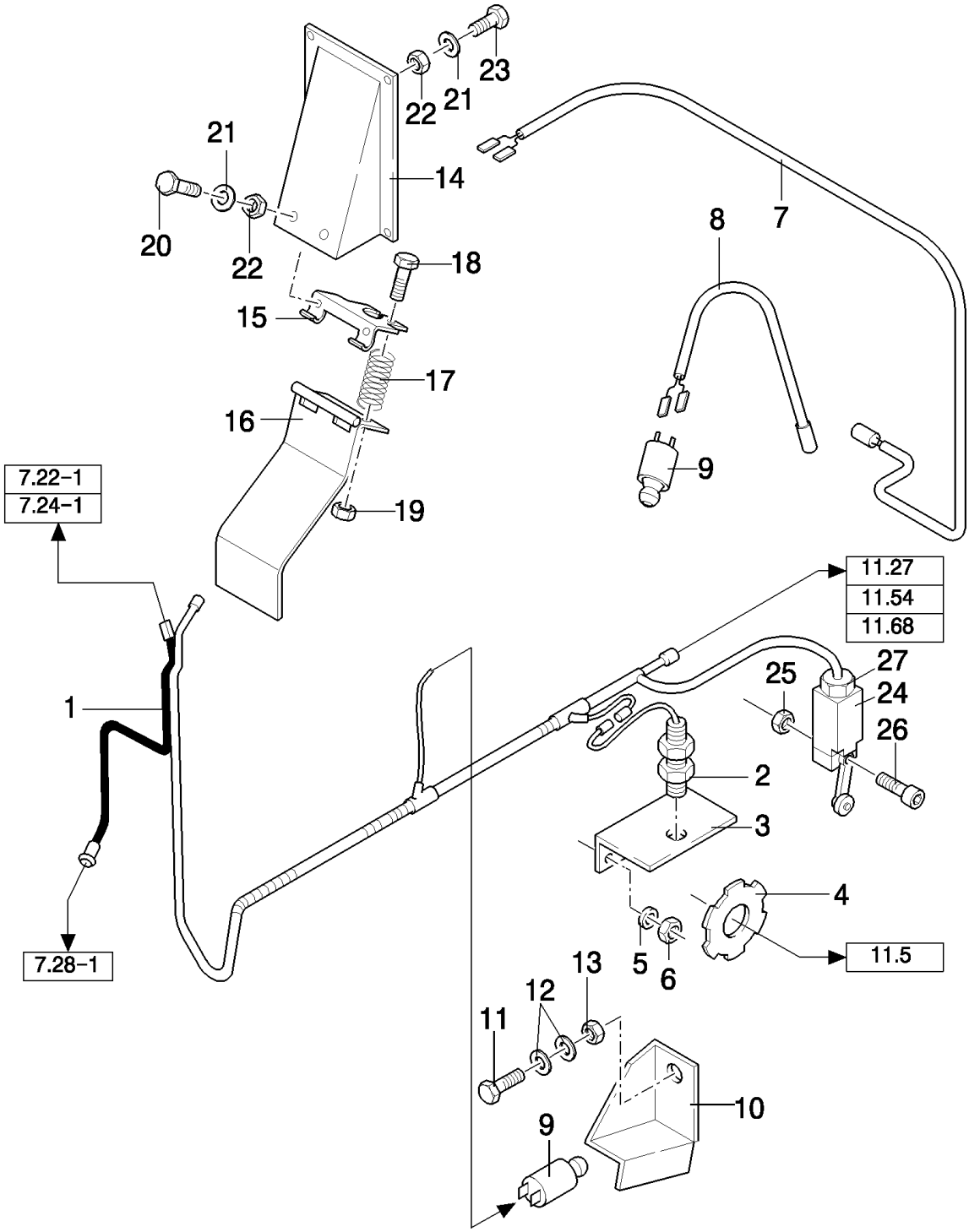

TX68 COMBINE - BASE UNIT

07.27(01) ELECTRICAL EQUIPMENT, STRAW CHOPPER

ссылка	Номер детали	Кол-во	Описание
1	9812303	1	HARNESS, WIRE, , -C5530
1	84002585	1	HARNESS, WIRE, , D5530-
2	84056992	1	SENSOR,
3	84037472	1	BRACKET,
4	84014170	1	DISC, , -C1169
4	84100831	1	DISC, , D1170-
5	140046	2	WASHER, Belleville, M12,
6	337475	2	NUT, M12, Cl 10,
7	84001602	1	HARNESS, WIRE,
8	84001601	1	HARNESS, WIRE,
9	89818685	2	SWITCH,
10	84017298	1	SUPPORT, RH
10	84017293	1	SUPPORT, LH
11	120104	4	SCREW, Hex, M8 x 20, 8.8,
12	412650	8	WASHER, Belleville, M8,
13	9706690	4	NUT, M8, Cl 8,
14	84015987	1	SUPPORT,
15	84015986	1	HINGE,
16	84015983	1	PLATE, COVER,
17	84005450	1	SPRING,
18	120056	1	SCREW, Hex, M6 x 50, 8.8,
19	353308	1	NUT, M6 x 1, Cl 8,
20	80120099	2	BOLT, Hex, M6 x 16, 8.8,
21	322357	6	WASHER, SPRING, Belleville, M6,
22	15896221	6	NUT, M6, Cl 10,
23	86511829	4	SCREW, Cross Pan Hd, M6 x 16,
24	84015509	1	SWITCH ASSY, , -C0066
24	84038152	1	SWITCH ASSY, , D1138-
24	84038152	1	SWITCH ASSY, , FOR "BISO" ONLY, D5530-
25	15896221	2	NUT, M6, Cl 10, M4, D5530-
26	412658	2	SCREW, Cross Pan Hd, M4 x 40, , D5530-
27	84000832	1	NUT, , FOR "BISO" ONLY, D5530-

07.28(01) STRAW CHOPPER, CLUTCH

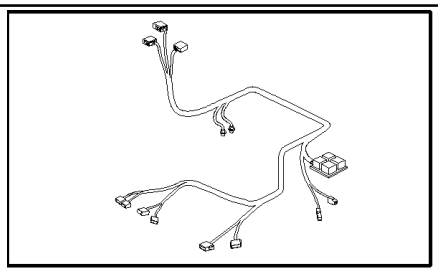

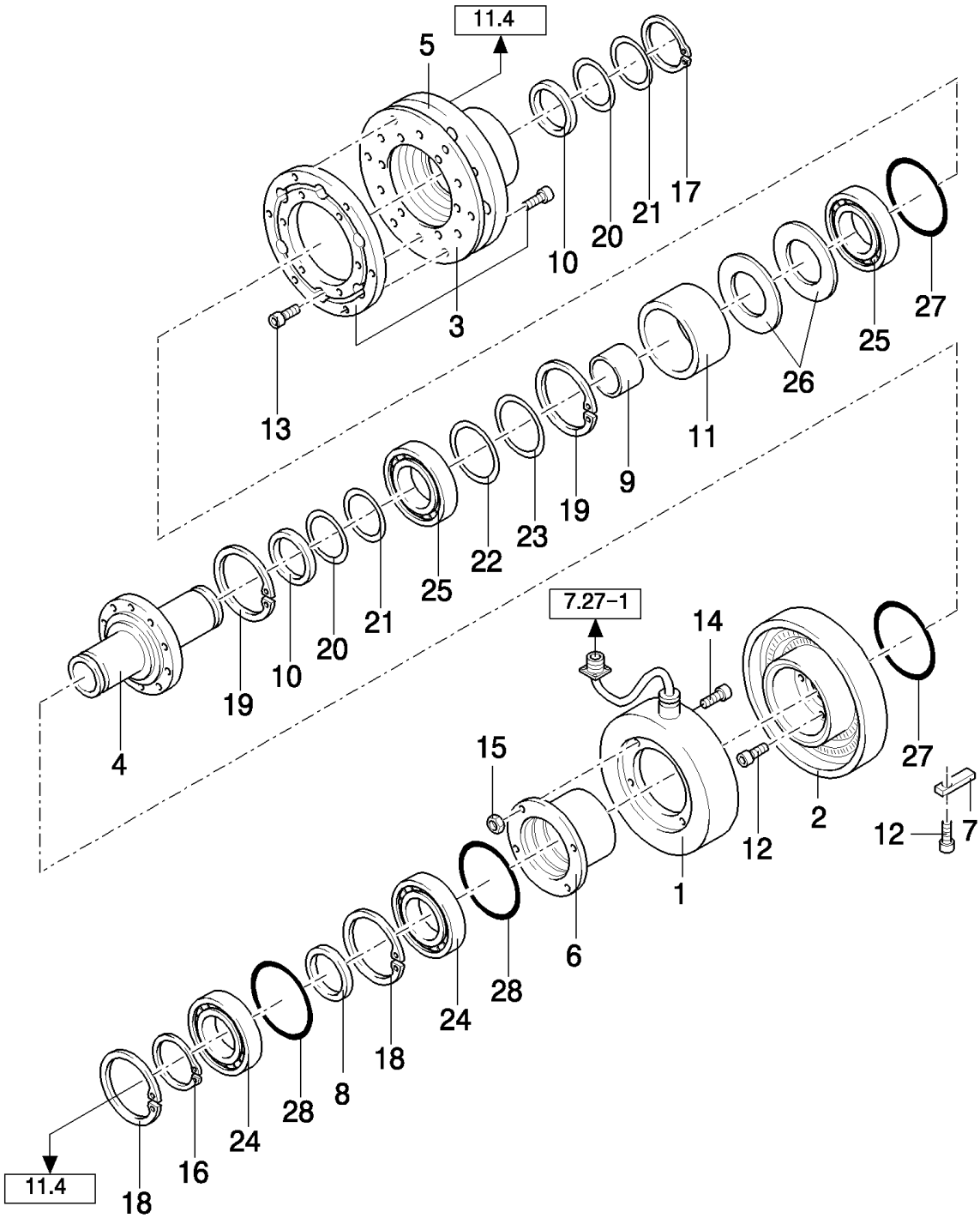

TX68 COMBINE - BASE UNIT

07.28(01) STRAW CHOPPER, CLUTCH

ссылка	Номер детали	Кол-во	Описание
	84011813	1	CLUTCH, (1 to 28)
1	84014399	1	ELECTROMAGNET,
2	9505843	1	ROTOR,
3	9514341	1	KIT,
4	84014400	1	HUB, , -C1271
4	84817163	1	HUB, , D1272-
5	84014401	1	FLANGE,
6	84014402	1	HUB,
7	9505887	2	KEY,
8	84014403	2	SHIM,
9	84014404	1	SLEEVE,
10	9505856	2	SHIM,
11	84014405	1	SLEEVE,
12	9505855	14	SCREW, M8x25
13	80300436	6	SCREW, M8x12
14	84014406	4	SCREW, M8x35
15	9706690	4	NUT, M8, Cl 8,
16	327911	1	CIRCLIP,
17	370027	1	RING, SNAP, M60, Ext,
18	370013	2	RING, SNAP, M90, Int,
19	9505858	2	CIRCLIP,
20	9505860	1	SHIM,
21	556886	1	SHIM, 0.2mm Thk,
22	84014407	1	SHIM,
23	84014408	1	SHIM,
24	9505853	2	BEARING ASSY,
25	84014409	2	BEARING ASSY,
26	9505851	4	PLATE, ADJUSTING,
27	84014410	2	O-RING,
28	84014411	2	O-RING,

07.29(01) STRAW WALKER, SHIELD

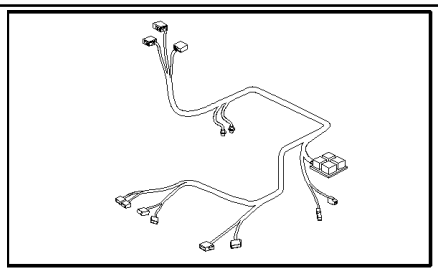

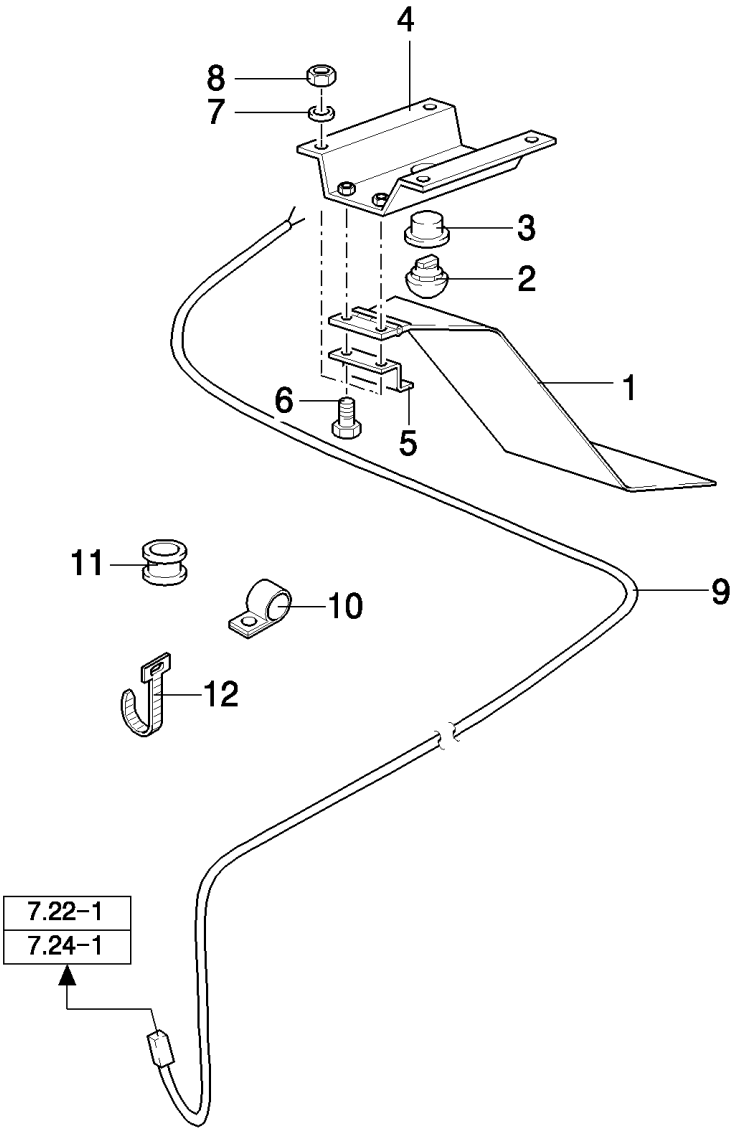

TX68 COMBINE - BASE UNIT

07.29(01) STRAW WALKER, SHIELD

ссылка	Номер детали	Кол-во	Описание
1	417790	1	SUPPORT,
2	335378	1	SWITCH,
3	397986	1	CUP,
4	417792	1	SUPPORT,
5	417793	1	SUPPORT,
6	80120099	2	BOLT, Hex, M6 x 16, 8.8,
7	322357	2	WASHER, SPRING, Belleville, M6,
8	15896221	2	NUT, M6, Cl 10,
9	9812295	1	HARNESS, WIRE, , FOR TX66-67-68 ONLY
9	84001440	1	HARNESS, WIRE, , FOR TX62-63-64-65 ONLY
10	9507808	12	CLAMP,
11	173011	1	GROMMET,
12	323597	5	STRAP, CABLE, M9 x 165 or M5 x 197,

07.30(01) GRAINTANK, LIGHTING AND ENGAGING SWITCHES

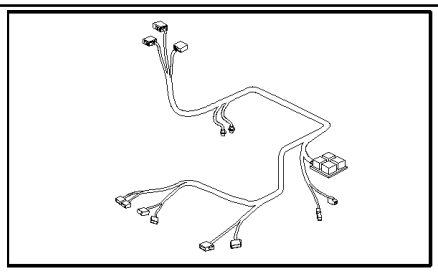

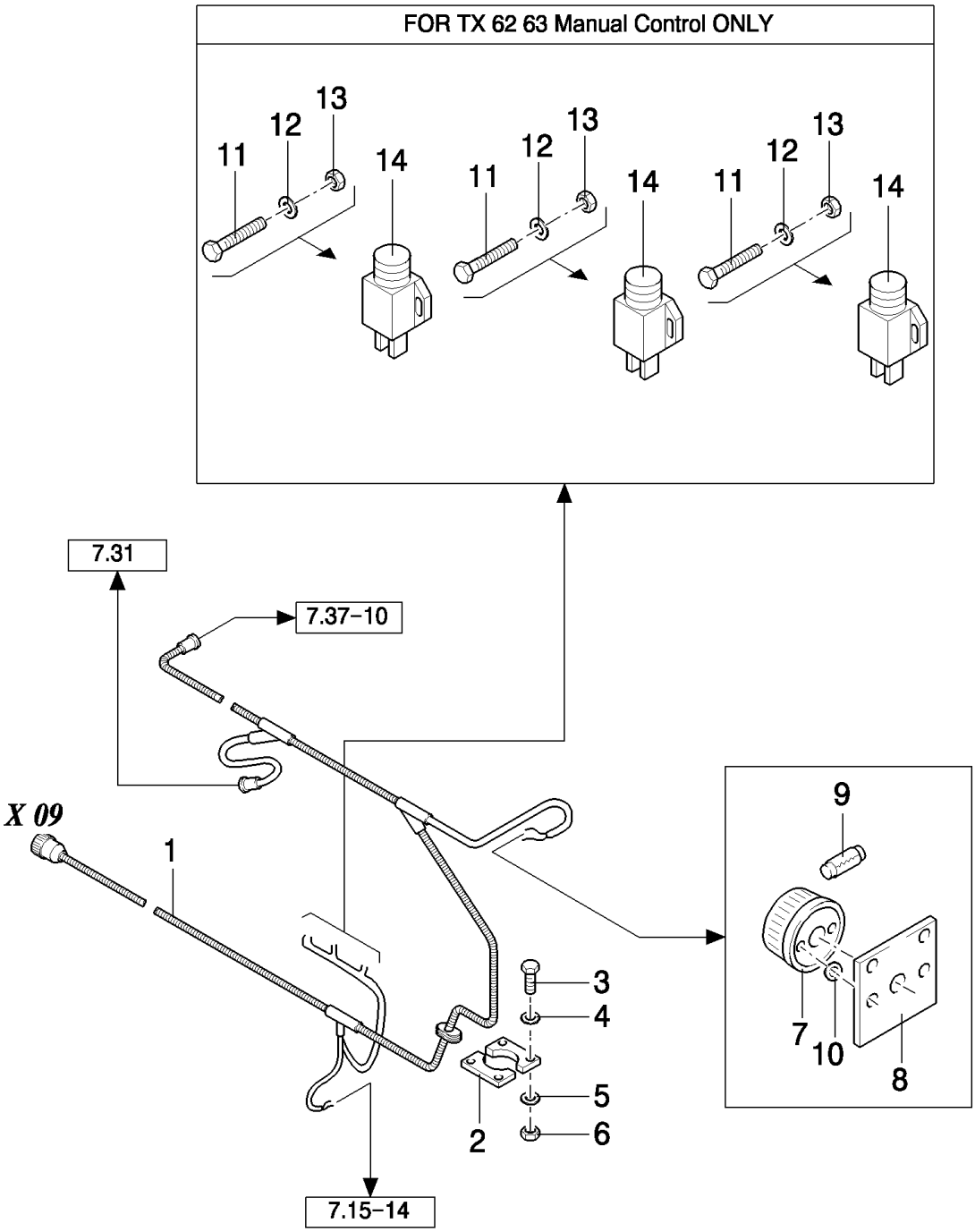

TX68 COMBINE - BASE UNIT

07.30(01) GRAINTANK, LIGHTING AND ENGAGING SWITCHES

ссылка	Номер детали	Кол-во	Описание
1	9812320	1	HARNESS, WIRE, , FOR TX66-68 ONLY, -C4620
1	84001448	1	HARNESS, WIRE, , FOR TX66-68 ONLY, -C0018
1	84035195	1	HARNESS, WIRE, , FOR TX66-67-68 ONLY, -C0032
1	84052318	1	HARNESS, WIRE, , FOR TX66-67-68 ONLY, D1033-
1	84001459	1	HARNESS, WIRE, , FOR TX64-65 ONLY, -C6405
1	84035198	1	HARNESS, WIRE, , FOR TX64-65 ONLY, -C0032
1	84052354	1	HARNESS, WIRE, , FOR TX64-65 ONLY, FOR TX63 WITH REMOTE CONTROL, D1033-
1	84001494	1	HARNESS, WIRE, , FOR TX62 ONLY, -C6405
1	84035201	1	HARNESS, WIRE, , FOR TX62 ONLY, -C0032
1	84052358	1	HARNESS, WIRE, , FOR TX62-63 ONLY, D1033-
2	9507860	2	PLATE,
3	80120099	4	BOLT, Hex, M6 x 16, 8.8,
4	140015	4	WASHER, 6MM
5	322357	4	WASHER, SPRING, Belleville, M6,
6	15896221	4	NUT, M6, Cl 10,
7	336483	1	LIGHT, TAIL,
8	398871	1	SUPPORT,
9	470016	1	BULB,
10	140015	2	WASHER, 6MM
11	86511824	6	SCREW, Cross Pan Hd, M4 x 20, M4x20, FOR TX62-63 ONLY
12	322355	6	WASHER, Belleville, M4, , FOR TX62-63 ONLY
13	100012	6	NUT, M4, Cl 8, , FOR TX62-63 ONLY
14	83952126	3	SWITCH ASSY, , FOR TX62-63 ONLY

07.31(01) GRAINTANK, LEVEL INDICATOR

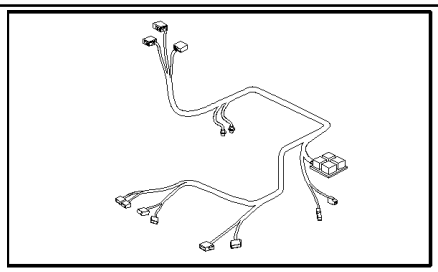

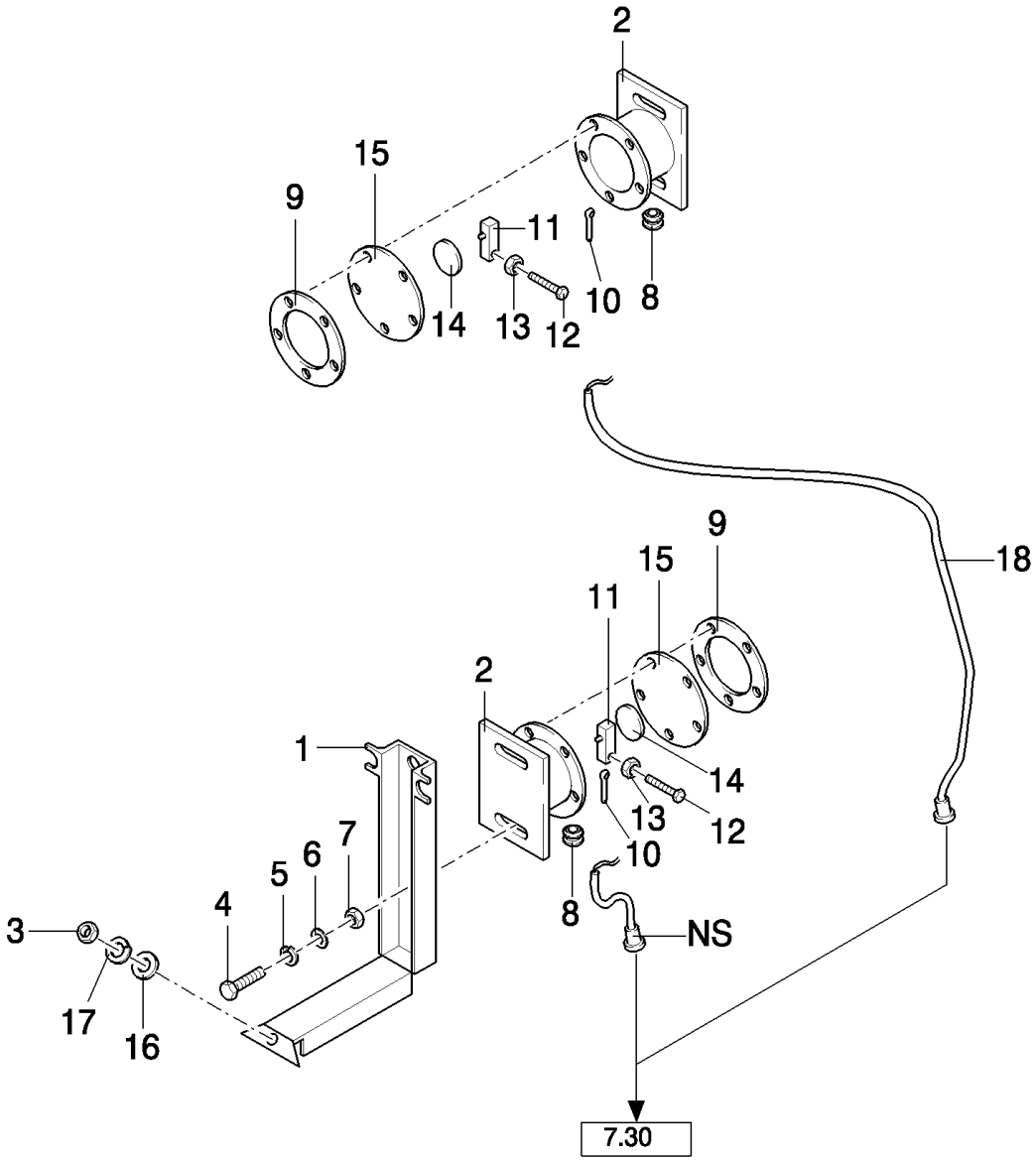

TX68 COMBINE - BASE UNIT

07.31(01) GRAINTANK, LEVEL INDICATOR

ссылка	Номер детали	Кол-во	Описание
1	455149	1	SUPPORT,
2	450336	2	CASE,
3	15896221	1	NUT, M6, Cl 10,
5	378243	2	WASHER, M8,
6	322358	2	WASHER, SPRING, Belleville, M8,
7	9706690	2	NUT, M8, Cl 8,
8	323788	2	GROMMET,
9	457556	2	RING,
10	9512667	2	PIN, SPLIT (COTTER), M2 x 20,
11	399159	2	SWITCH,
12	301571	2	SCREW,
13	86508812	2	NUT, M3, Cl 8,
14	250244	1	WASHER,
15	435233	2	CANVAS,
16	140015	2	WASHER, 6MM
17	322357	1	WASHER, SPRING, Belleville, M6,
18	84052365	1	HARNESS, WIRE, , D1033-
4	16043224	2	BOLT, Hex, M8 x 16, 8.8, Full Thd,

07.32(01) FRONT ILLUMINATION AND HARNESSES

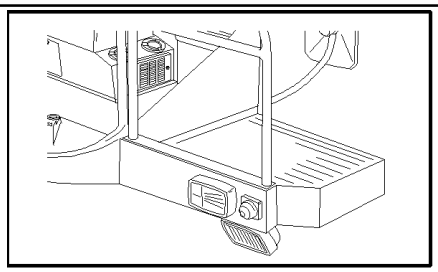

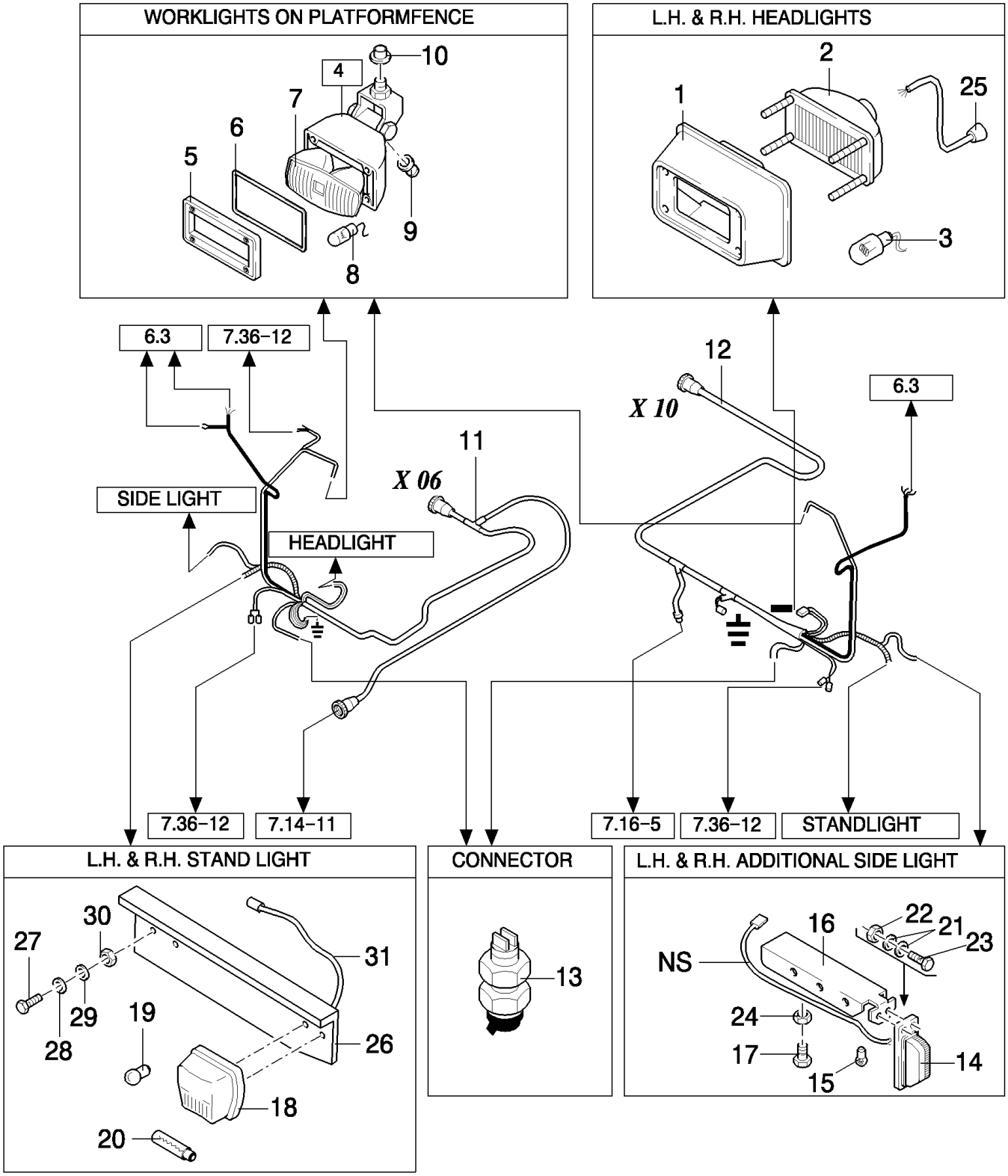

TX68 COMBINE - BASE UNIT

07.32(01) FRONT ILLUMINATION AND HARNESSES

ссылка	Номер детали	Кол-во	Описание
1	9819959	2	ARMATURE,
2	434926	2	HEADLAMP,
2	445490	2	HEADLAMP, , FOR UK ONLY
3	446592	2	BULB,
4	9813938	1	LAMP, (5 to 10)
5	9832589	1	COVER, PLASTIC
6	9832590	1	SEAL,
7	9832591	1	REFLECTOR, LAMP,
8	9703399	2	BULB, 12V-55W
9	9832592	1	BUSHING, RUBBER,
10	433314	2	PLUG,
11	9812318	1	HARNESS, WIRE, RH, FOR TX66-68 ONLY, -C6405
11	84052367	1	HARNESS, WIRE, RH, FOR TX66-68 ONLY, D6405-
11	84001426	1	HARNESS, WIRE, RH, FOR TX64-65 ONLY, -C6405
11	84052378	1	HARNESS, WIRE, RH, FOR TX63-64-65 ONLY, D6405-
11	84012019	1	HARNESS, WIRE, RH, FOR TX62 ONLY, -C6405
11	84052383	1	HARNESS, WIRE, RH, FOR TX62 ONLY, D6405-
11	84052367	1	HARNESS, WIRE, RH, FOR TX67 ONLY
12	84052366	1	HARNESS, WIRE, LH, FOR TX66-68 ONLY, -C6405
12	84052366	1	HARNESS, WIRE, LH, FOR TX66-68 ONLY, -C0070
12	84807997	1	HARNESS, WIRE, , D1254-
12	84001605	1	HARNESS, WIRE, LH, FOR TX62-64-65 ONLY, -C6405
12	84052376	1	HARNESS, WIRE, LH, FOR TX62-63-64-65 ONLY, -C0070
12	84807998	1	HARNESS, WIRE, , FOR TX62-63-64-65 ONLY, D1254-
12	84001736	1	HARNESS, WIRE, LH, FOR TX67 ONLY
13	374418	3	SOCKET, POWER,
14	449531	2	LAMP,
15	353078	2	BULB,
16	84000884	2	SUPPORT,
17	120113	2	BOLT, Hex, M10 x 50, 8.8, Full Thd,
18	418871	2	LAMP,
19	398877	2	BULB,
20	470017	2	BULB,
21	322357	8	WASHER, SPRING, Belleville, M6,
22	15896221	4	NUT, M6, Cl 10,
23	80120099	4	BOLT, Hex, M6 x 16, 8.8,
24	100016	2	NUT, M10, Cl 8,
25	84001872	2	HARNESS, WIRE,
26	84320017	1	SUPPORT, LH, WITH "TERRA" TYRES
26	84320018	1	SUPPORT, RH, WITH "TERRA" TYRES
27	86511042	2	SCREW, Cross Pan Hd, M4 x 16, , WITH "TERRA" TYRES
28	89824840	2	WASHER, 4MM, WITH "TERRA" TYRES
29	322355	2	WASHER, Belleville, M4, , WITH "TERRA" TYRES
30	100012	2	NUT, M4, Cl 8, , WITH "TERRA" TYRES

TX68 COMBINE - BASE UNIT

07.32(01) FRONT ILLUMINATION AND HARNESSES

ссылка	Номер детали	Кол-во	Описание
31	84052737	2	HARNESS, WIRE, , WITH "TERRA" TYRES

07.33(01) REAR LIGHTS AND HARNESSES

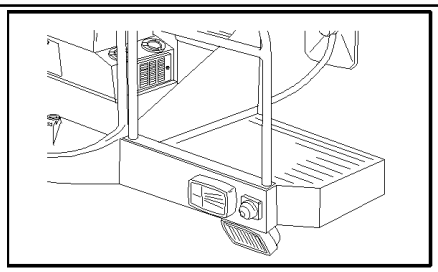

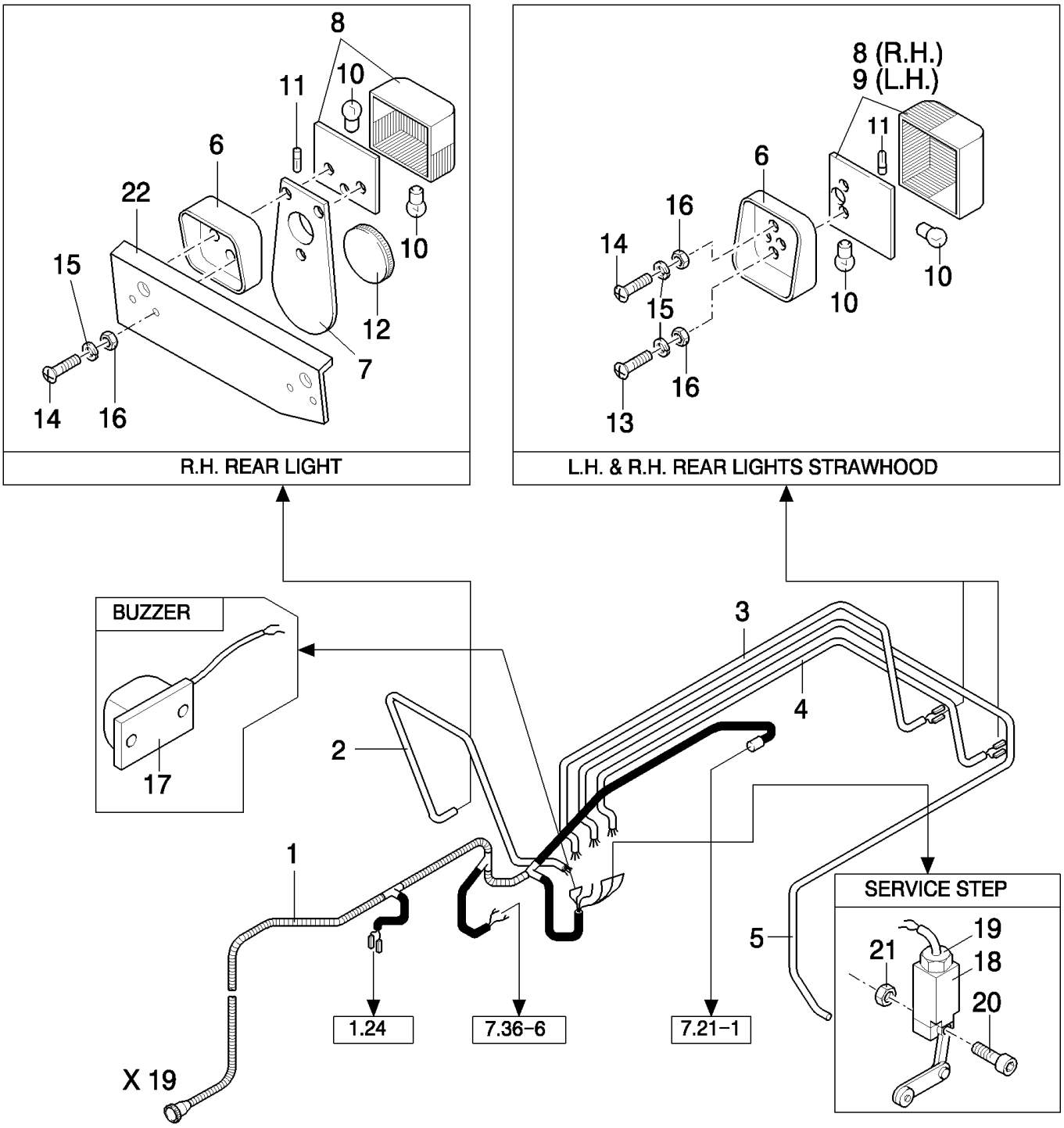

TX68 COMBINE - BASE UNIT

07.33(01) REAR LIGHTS AND HARNESSES

ссылка	Номер детали	Кол-во	Описание
1	84001592	1	HARNESS, WIRE, , -C6405
1	84035180	1	HARNESS, WIRE, , -C0032
1	84052013	1	HARNESS, WIRE, , D1033-
2	9812277	1	HARNESS, WIRE, RH, FOR TX66-68 ONLY, -C6405
2	84035208	1	HARNESS, WIRE, RH, FOR TX66-68 ONLY, D6405-
2	84035217	1	HARNESS, WIRE, RH, FOR TX67 ONLY
2	84001520	1	HARNESS, WIRE, RH, FOR TX62-64-65 ONLY, -C6405
2	84035216	1	HARNESS, WIRE, RH, FOR TX62-63-64-65 ONLY, D6405-
2	84052860	1	HARNESS, WIRE, RH, WITH "TERRA" TYRES
3	9812280	1	HARNESS, WIRE, RH, -C6405
3	84035208	1	HARNESS, WIRE, RH, D6405-
4	84005737	1	HARNESS, WIRE, LH, FOR TX66-68 ONLY, -C6405
4	84035218	1	HARNESS, WIRE, LH, FOR TX66-67-68 ONLY, D6405-
4	84001434	1	HARNESS, WIRE, LH, FOR TX62-64-65 ONLY, -C6405
4	84035219	1	HARNESS, WIRE, LH, FOR TX62-63-64-65 ONLY, D6405-
5	9812278	1	HARNESS, WIRE, LH, FOR TX66-68 ONLY, -C6405
5	84035196	1	HARNESS, WIRE, LH, FOR TX66-67-68 ONLY, D6405-
5	84001435	1	HARNESS, WIRE, LH, FOR TX62-64-65 ONLY, -C6405
5	84035203	1	HARNESS, WIRE, LH, FOR TX62-63-64-65 ONLY, D6405-
5	84052858	1	HARNESS, WIRE, LH, WITH "TERRA" TYRES
6	9812400	3	SUPPORT, , -C6405
6	84039538	3	SUPPORT, , -C0032
6	84039538	2	SUPPORT, , FOR STRAWHOOD LIGHTS ONLY, D1033-
6	84053401	1	SUPPORT, , D1033-
7	913984	1	SUPPORT, , -C6405
7	84039536	1	SUPPORT, , -C0032
7	84053449	1	SUPPORT, , D1033-
8	434928	AR	LAMP, RH, -C6405
8	84037090	AR	LAMP, TAIL, RH, D6405-
9	434927	1	LAMP, LH, -C6405
9	84037093	1	LAMP, LH, D6405-
9	84037090	1	LAMP, TAIL, LH, FOR GERMANY ONLY, D6405-
10	398877	6	BULB, 12V-21W
11	418870	3	BULB, 12V-21W
12	437024	1	REFLECTOR, RED
13	412658	2	SCREW, Cross Pan Hd, M4 x 40, M4x35
14	120202	4	SCREW, Cross Pan Hd, M4 x 30,
15	322355	6	WASHER, Belleville, M4,
16	100012	6	NUT, M4, Cl 8,
17	84017783	1	BUZZER,
18	84038152	1	SWITCH ASSY,
19	84000832	1	NUT,
20	301572	2	SCREW, Cross Pan Hd, M4 x 35, M4x35
21	100012	2	NUT, M4, Cl 8,

TX68 COMBINE - BASE UNIT

07.33(01) REAR LIGHTS AND HARNESSES

ссылка	Номер детали	Кол-во	Описание
22	84320018	1	SUPPORT, , WITH "TERRA" TYRES

07.34(01) REAR LIGHTS AND HARNESSES

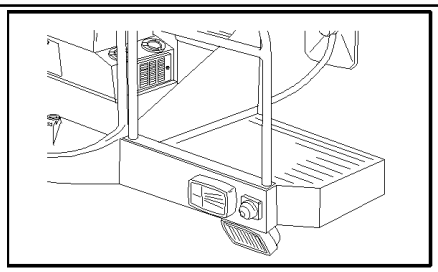

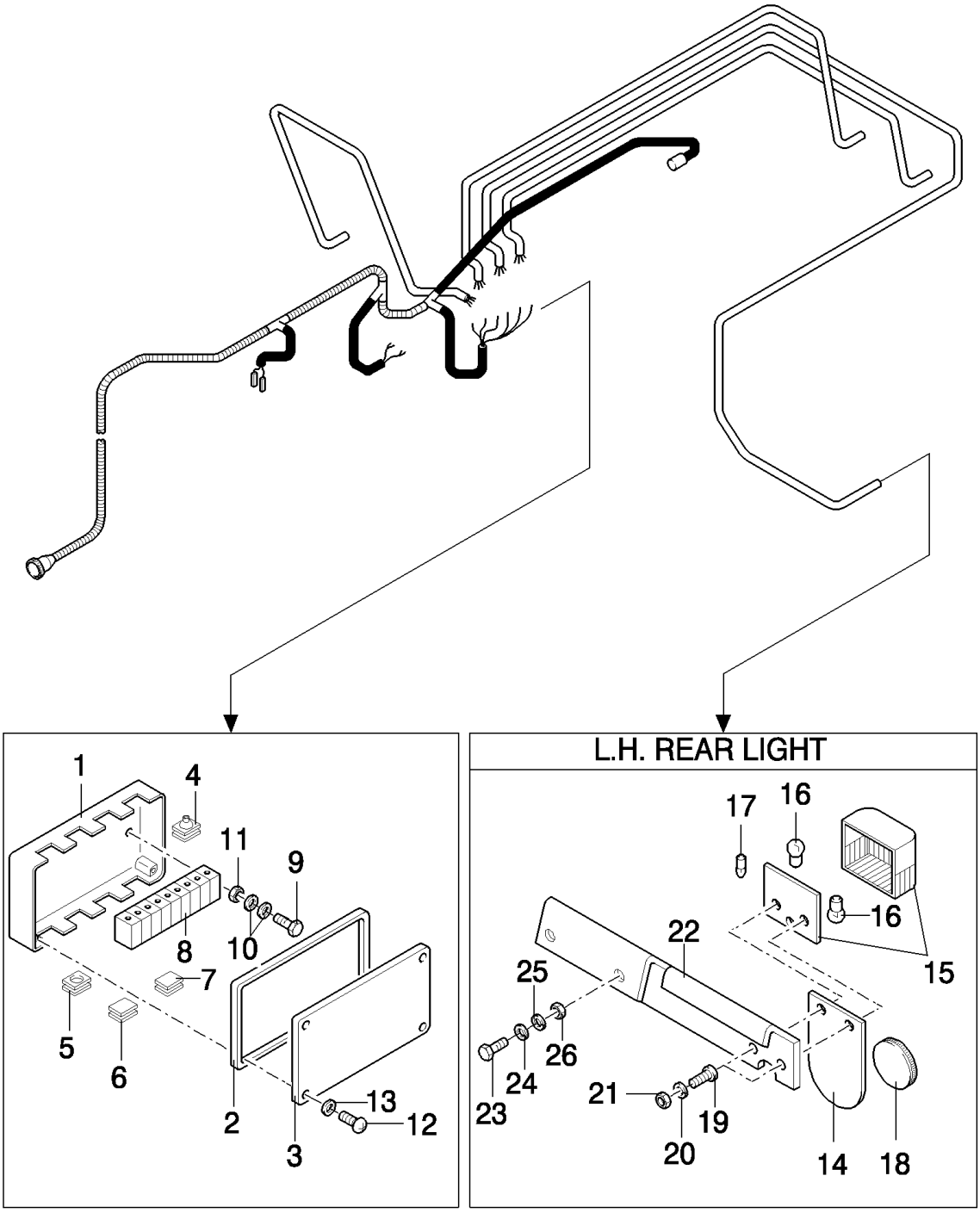

TX68 COMBINE - BASE UNIT

07.34(01) REAR LIGHTS AND HARNESSES

ссылка	Номер детали	Кол-во	Описание
1	9507881	1	HOUSING,
2	9506873	1	ELEMENT, SEALING,
3	9506872	1	COVER,
4	9504337	4	PLUG,
5	9508474	1	PLUG,
6	9504343	1	PLUG,
7	9508323	1	PLUG,
8	433132	1	CONNECTOR, HYD.,
9	120098	2	BOLT, Hex, M5 x 20, 8.8, Full Thd,
10	399544	4	WASHER, 5MM
11	86508813	2	NUT, M5, Cl 8,
12	86511830	4	SCREW, Cross Pan Hd, M6 x 20,
13	140015	4	WASHER, 6MM
14	913984	1	SUPPORT, , -C6405
14	84039536	1	SUPPORT, , -C0032
14	84053449	1	SUPPORT, , D1033-
15	445631	1	LAMP, , -C6405
15	84037090	1	LAMP, TAIL, , D6405-
16	398877	2	BULB, 12V-21W
17	418870	1	BULB, 12V-21W
18	437024	1	REFLECTOR, Red
19	86511824	2	SCREW, Cross Pan Hd, M4 x 20, M4x20
20	322355	2	WASHER, Belleville, M4,
21	100012	2	NUT, M4, Cl 8,
22	84014833	1	ARM, LH, FOR TX66-67-68 ONLY, -C6405
22	84041160	1	ARM, LH, FOR TX66-67-68 ONLY, D6405-
22	84019438	1	ARM, LH, FOR TX62-64-65 ONLY, -C6405
22	84041159	1	ARM, LH, FOR TX62-63-64-65 ONLY, D6405-
22	84320019	1	SUPPORT, LH, WITH "TERRA" TYRES
23	120104	2	SCREW, Hex, M8 x 20, 8.8,
24	140016	2	WASHER, M8 x 16 x 1.6,
25	322358	2	WASHER, SPRING, Belleville, M8,
26	9706690	2	NUT, M8, Cl 8,

07.35(01) REAR LIGHTS AND HARNESSES, ITALY AND SWITZERLAND

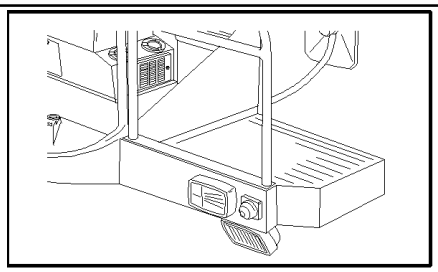

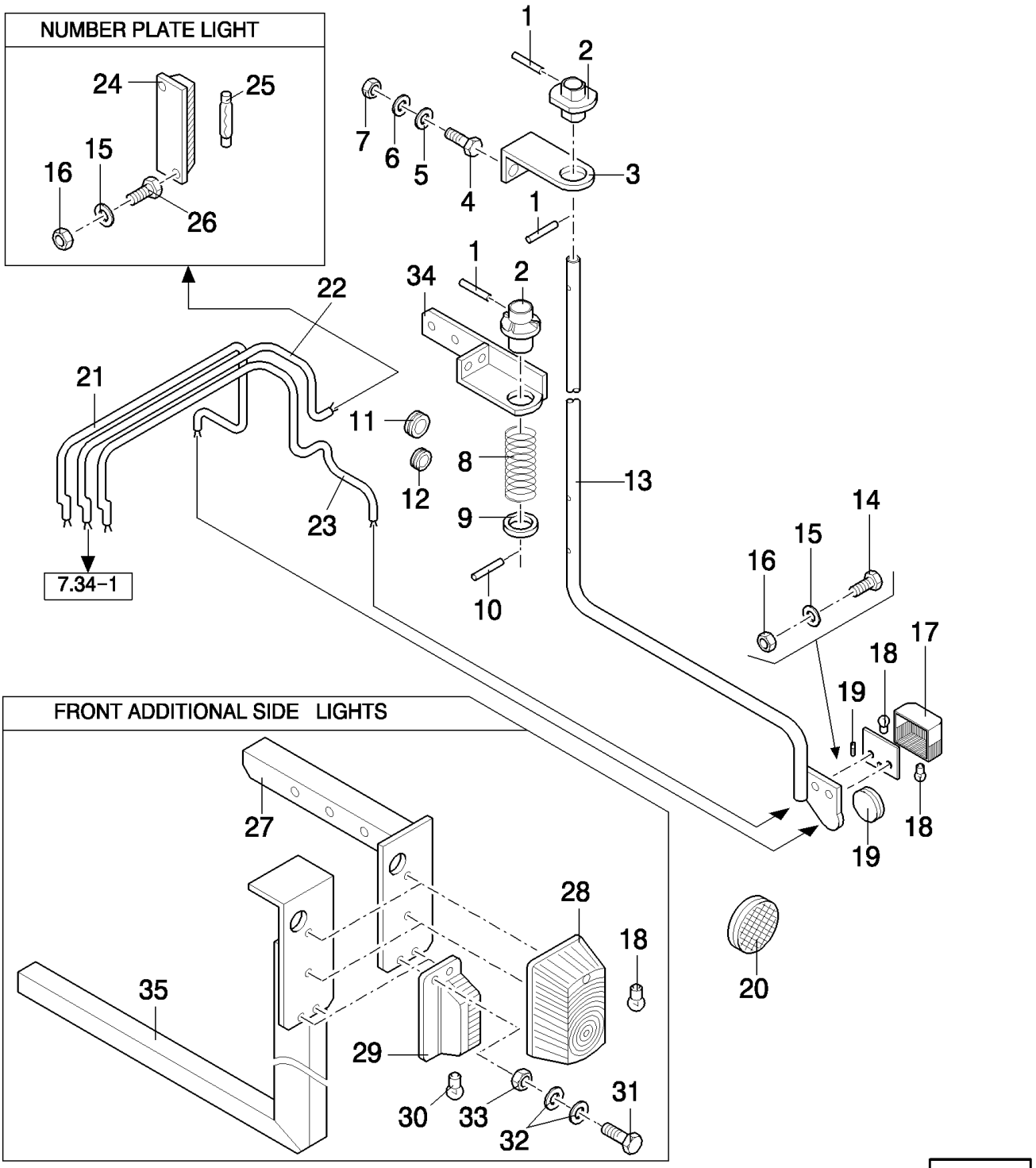

TX68 COMBINE - BASE UNIT

07.35(01) REAR LIGHTS AND HARNESSES, ITALY AND SWITZERLAND

ссылка	Номер детали	Кол-во	Описание
1	9503517	6	PIN,
2	921928	4	BUSHING,
3	920638	2	SUPPORT, , -C5620
3	84021539	2	SUPPORT, , D5620-
4	120104	8	SCREW, Hex, M8 x 20, 8.8,
5	378243	8	WASHER, M8,
6	322358	8	WASHER, SPRING, Belleville, M8,
7	9706690	8	NUT, M8, Cl 8,
8	435967	2	SPRING,
9	378248	2	WASHER,
10	9503523	2	PIN,
11	336152	2	GROMMET,
12	411809	2	GROMMET,
13	84007955	2	ARM, SUPPORTING, , FOR TX66-68 ONLY, -C6405
13	84041036	1	ARM, SUPPORTING, LH, FOR TX66-68 ONLY, D6405-
13	84041049	1	ARM, SUPPORTING, RH, FOR TX66-68 ONLY, D6405-
13	84007955	1	ARM, SUPPORTING, LH, FOR TX62-64-65 ONLY, -C6405
13	84041014	1	ARM, SUPPORTING, LH, FOR TX62-63-64-65-67 ONLY, D6405-
13	84014959	1	ARM, SUPPORTING, RH, FOR TX62-64-65 ONLY, -C6405
13	84041015	1	ARM, SUPPORTING, RH, FOR TX62-63-64-65-67 ONLY, D6405-
14	86511042	4	SCREW, Cross Pan Hd, M4 x 16,
15	140013	6	WASHER, M4,
16	100012	6	NUT, M4, Cl 8,
17	445631	1	LAMP, LH, -C6405
17	84037090	2	LAMP, TAIL, LH AND RH, D6405-
17	434928	1	LAMP, RH, -C6405
18	398877	8	BULB, 12V-21W
18	418870	2	BULB, 12V-21W
19	437024	4	REFLECTOR, RED
20	435895	8	REFLECTOR, YELLOW
21	84007953	1	HARNESS, WIRE, LH, FOR TX66-68 ONLY, -C6405
21	84035224	1	HARNESS, WIRE, LH, FOR TX66-68 ONLY, D6405-
21	84001437	1	HARNESS, WIRE, LH, FOR TX62-64-65 ONLY, -C6405
21	84035222	1	HARNESS, WIRE, LH, FOR TX62-63-64-65-67 ONLY, D6405-
22	84007952	1	HARNESS, WIRE, LH, FOR TX66-67-68 ONLY
22	84001436	1	HARNESS, WIRE, LH, FOR TX62-63-64-65 ONLY
23	84007951	1	HARNESS, WIRE, RH, FOR TX66-68 ONLY, -C6405
23	84035223	1	HARNESS, WIRE, RH, FOR TX66-67-68 ONLY, D6405-
23	84001538	1	HARNESS, WIRE, RH, FOR TX62-64-65 ONLY, -C6405
23	84035221	1	HARNESS, WIRE, RH, FOR TX62-63-64-65 ONLY, D6405-
24	445502	1	LAMP,
25	470017	1	BULB, 12V-5W
26	120202	2	SCREW, Cross Pan Hd, M4 x 30,
27	84007957	2	SUPPORT,

ссылка	Номер детали	Кол-во	Описание
28	84011216	1	LAMP ASSY, SIDE, LH
28	84011215	1	LAMP ASSY, SIDE, RH
29	449531	2	LAMP,
30	353078	2	BULB,
31	80120099	4	BOLT, Hex, M6 x 16, 8.8,
32	322357	8	WASHER, SPRING, Belleville, M6,
33	15896221	4	NUT, M6, Cl 10,
34	920638	2	SUPPORT, , -C5620
34	84021540	1	SUPPORT, LH, D5620-
34	84021541	1	SUPPORT, RH, D5620-
35	84052463	1	ARM, LH
35	84052440	1	ARM, RH

07.35A(01) FRONT ILLUMINATION AND HARNESSES, AUSTRIA

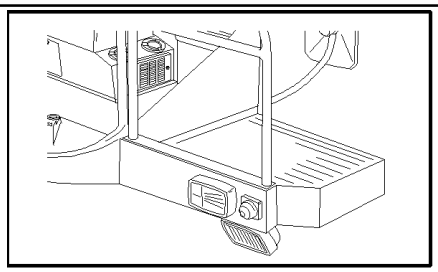

FRONT ADDITIONAL SIDE LIGHTS

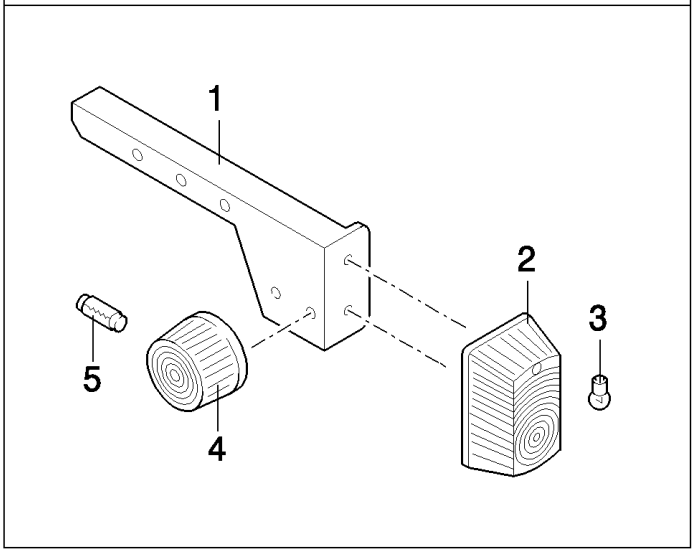

TX68 COMBINE - BASE UNIT

07.35A(01) FRONT ILLUMINATION AND HARNESSES, AUSTRIA

ссылка	Номер детали	Кол-во	Описание
1	84017651	1	SUPPORT, RH
1	84017650	1	SUPPORT, LH
2	84011215	1	LAMP ASSY, SIDE, RH
2	84011216	1	LAMP ASSY, SIDE, LH
3	418870	2	BULB,
4	336483	2	LIGHT, TAIL,
5	470016	2	BULB,

07.36(01) WORK LIGHTS

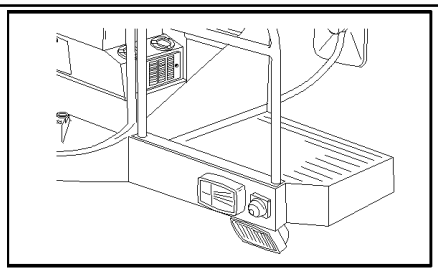

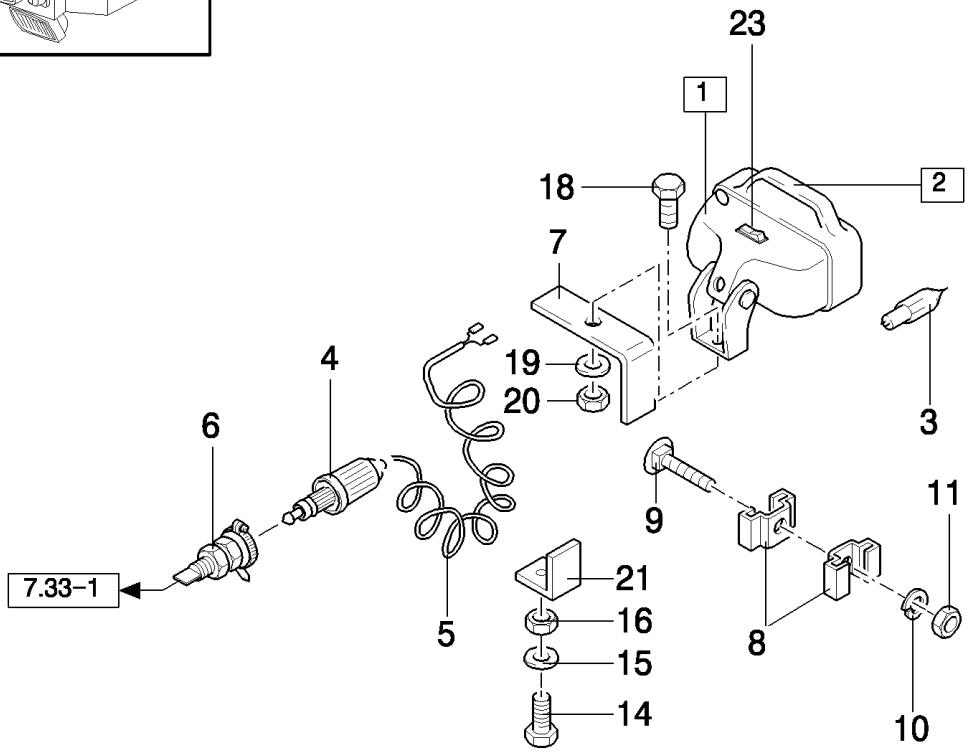

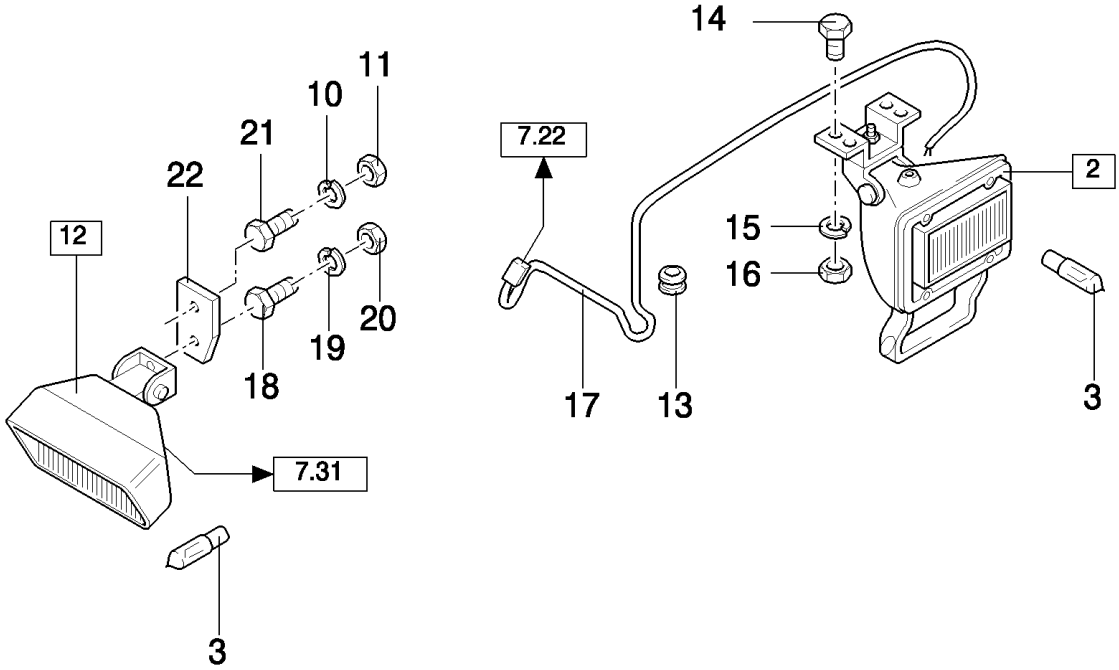

TX68 COMBINE - BASE UNIT

07.36(01) WORK LIGHTS

ссылка	Номер детали	Кол-во	Описание
1	84004176	1	LAMP, WORK, (2 to 5,18 to 20), STUBBLE LIGHT ON STRAWHOOD
2	9837140	2	LAMP, (3, 23), ADJUSTABLE WORK LIGHT ON ENGINE PLATFORM
3	9703399	5	BULB, 12V-55W
4	353969	1	CONNECTOR, ELEC,
5	264517	1	HARNESS, WIRE,
6	374418	1	SOCKET, POWER,
7	9813909	1	SUPPORT, REAR
8	9837606	2	CLIP,
10	322358	4	WASHER, SPRING, Belleville, M8,
11	9706690	2	NUT, M8, Cl 8,
12	9819611	3	LAMP, (3), STUBBLE LIGHTS UNDER PLATFORM AND RH ON PLATFORM
13	411809	AR	GROMMET,
14	80120099	8	BOLT, Hex, M6 x 16, 8.8,
15	322357	8	WASHER, SPRING, Belleville, M6,
16	15896221	8	NUT, M6, Cl 10,
17	9812301	1	HARNESS, WIRE, , FOR TX62-64-65-66-67-68 ONLY, -C1032
17	84052016	1	HARNESS, WIRE, , D1033-
18	V43471	2	BOLT, M10x20
19	140045	2	WASHER, SPRING, Belleville, M10,
20	100016	2	NUT, M10, Cl 8,
21	84000878	2	BRACKET,
22	84022169	1	SUPPORT, FRONT
23	84814248	1	SWITCH,
9	16043224	2	BOLT, Hex, M8 x 16, 8.8, Full Thd,

07.37(01) WARNING LIGHTS

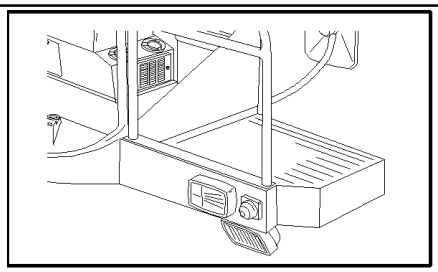

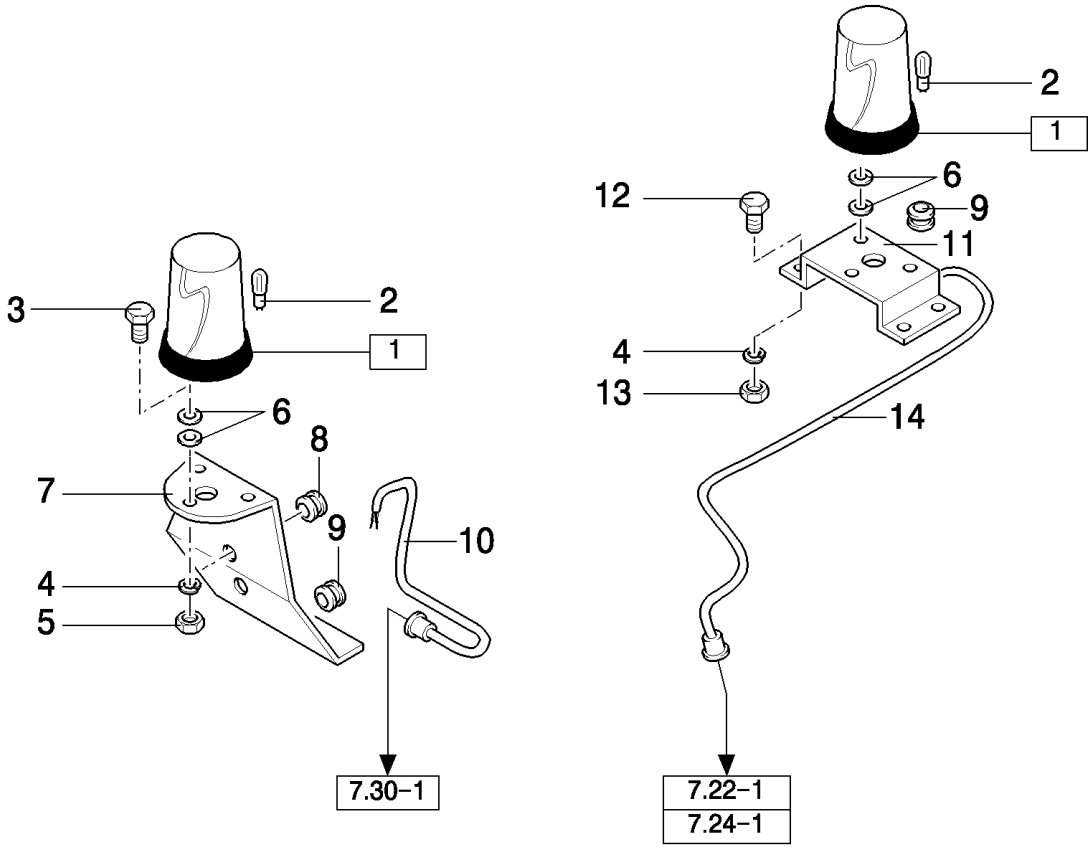

TX68 COMBINE - BASE UNIT

07.37(01) WARNING LIGHTS

ссылка	Номер детали	Кол-во	Описание
1	336844	2	BEACON, ORANGE (2 to 5)
1	457566	2	FLASHER UNIT, YELLOW (2 to 5)
2	442227	2	BULB, 12V-55W
2	398877	2	BULB, , YELLOW FLASHER
3	120100	6	BOLT, Hex, M6 x 20, 8.8,
4	322357	10	WASHER, SPRING, Belleville, M6,
5	353308	6	NUT, M6 x 1, Cl 8,
6	140040	12	WASHER, M6 x 22 x 2, , YELLOW FLASHER
7	9839538	1	SUPPORT, , FOR TX62-63-64-65-66-68 ONLY, ON GRAINTANK
7	84042040	1	SUPPORT, , ON GRAINTANK, FOR TX67 ONLY
8	411809	1	GROMMET,
9	336152	2	GROMMET,
10	9812300	1	HARNESS, WIRE,
11	9839581	1	SUPPORT, , FOR TX62-63-64-65-66-68 ONLY, ON STRAWHOOD
11	84042041	1	SUPPORT, , ON STRAWHOOD, FOR TX67 ONLY
12	80120099	4	BOLT, Hex, M6 x 16, 8.8,
13	15896221	4	NUT, M6, Cl 10,
14	9812314	1	HARNESS, WIRE, , FOR TX66-68 ONLY
14	84001439	1	HARNESS, WIRE, , FOR TX62-63-64-65 ONLY
14	84035371	1	HARNESS, WIRE, , FOR TX67 ONLY

07.37A(01) ILLUMINATION KIT FOR CORNHEADER

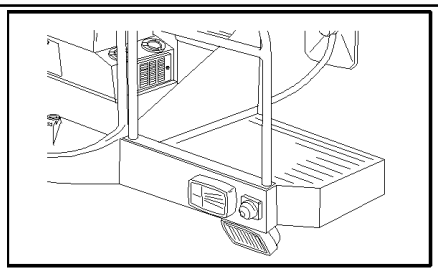

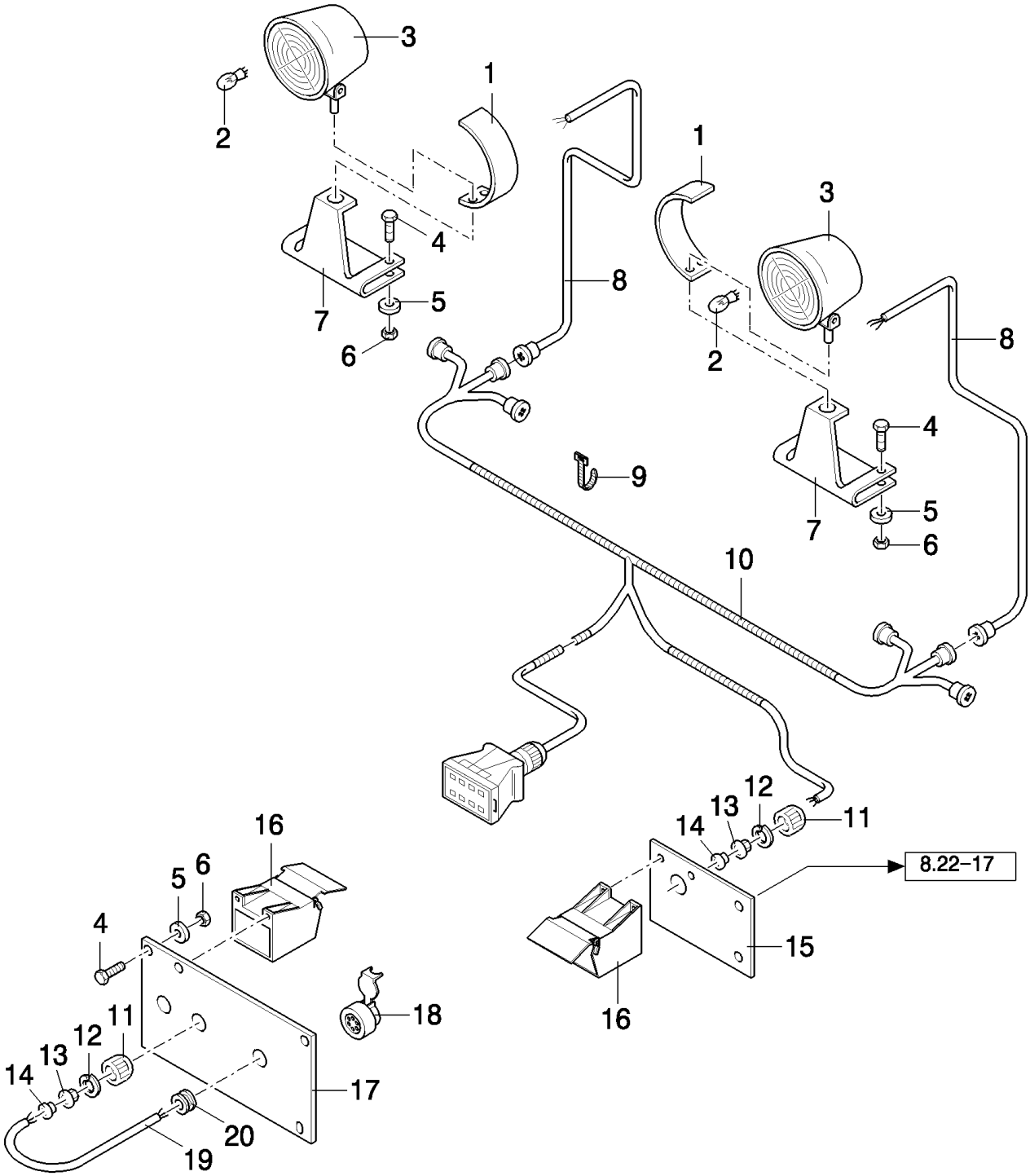

TX68 COMBINE - BASE UNIT

07.37A(01) ILLUMINATION KIT FOR CORNHEADER

ссылка	Номер детали	Кол-во	Описание
1	84039151	2	PLATE, COVER,
2	446592	2	BULB,
3	418863	2	LAMP,
4	120102	4	SCREW, Hex, M6 x 40, 8.8, Full Thd,
5	322357	10	WASHER, SPRING, Belleville, M6,
6	15896221	6	NUT, M6, Cl 10,
7	84039152	2	BRACKET,
8	84035126	2	HARNESS, WIRE,
9	323597	AR	STRAP, CABLE, M9 x 165 or M5 x 197,
10	84035643	1	HARNESS, WIRE,
11	84022437	2	NUT,
12	84022438	2	WASHER, LOCK,
13	84022440	2	CONNECTOR, HYD.,
14	84022441	2	RING,
15	84053516	1	BRACKET,
16	84018930	2	CONNECTOR, ELEC,
17	84053737	1	BRACKET,
18	398224	1	SOCKET, POWER,
19	84035127	1	HARNESS, WIRE,
20	46288	1	GROMMET,

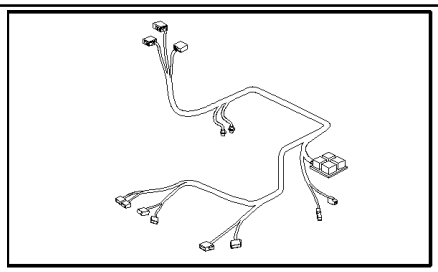

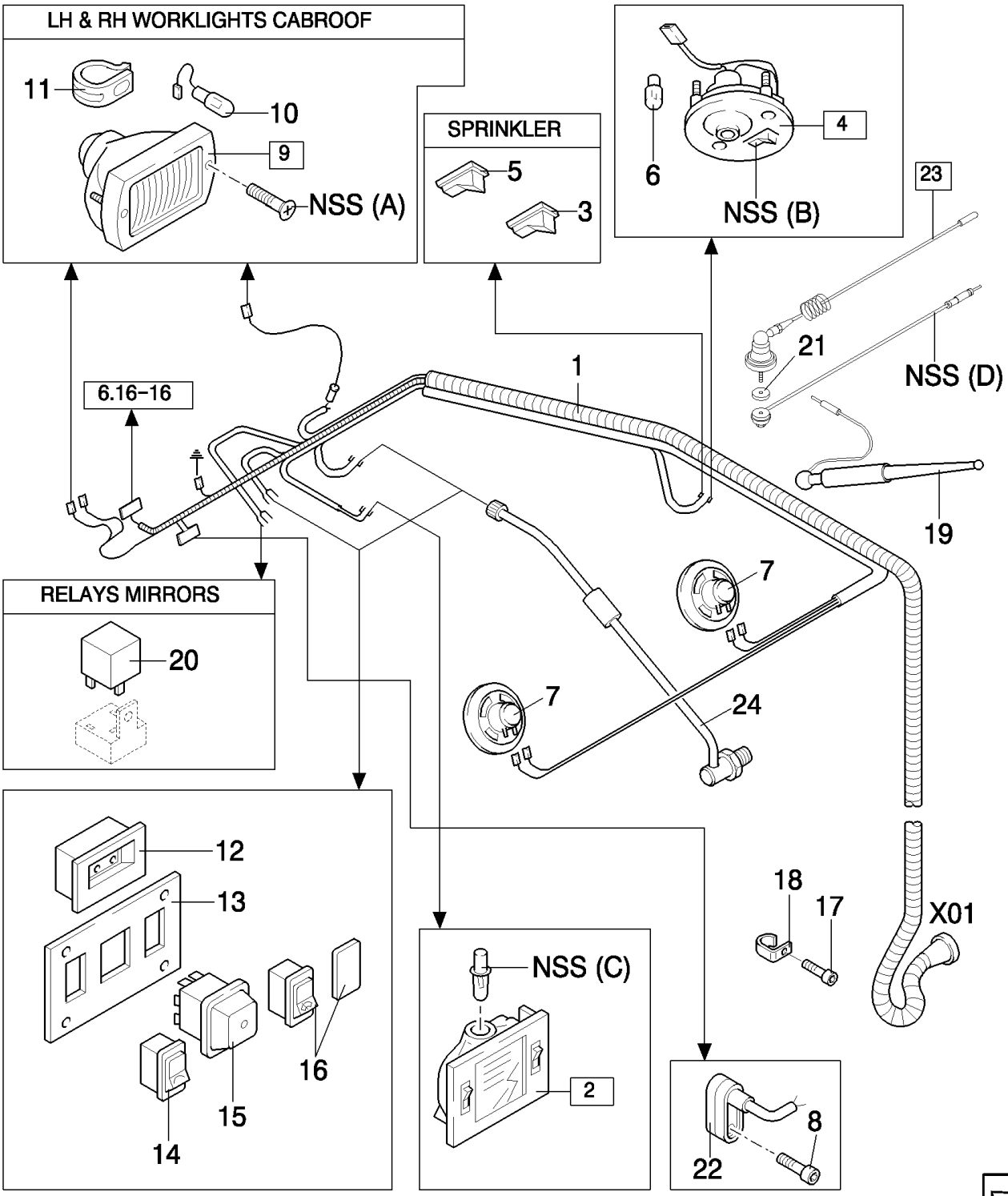
LH & RH WORKLIGHTS CABROOF
11
10
9
NSS (A)
SPRINKLER
5
3
4
6
NSS (B)
23
21
NSS (D)
1
6.16-16
19
7
RELAYS MIRRORS
20
7
24
12
13
18
17
X01
NSS (C)
16
2
15
14
8
22

TX68 COMBINE - BASE UNIT

07.38(01) CAB ROOF, ELECTRICITY

ссылка	Номер детали	Кол-во	Описание
1	9812270	1	HARNESS, WIRE, , -C6500
1	84002957	1	HARNESS, WIRE, , -C0015
1	84035151	1	HARNESS, WIRE, , -C0060
1	84431915	1	HARNESS, WIRE, , D1164-
2	9504225	1	LAMP, (C)
3	84007080	1	SWITCH, WINDSHIELD WIPER, WIPER, D6405-
4	9504222	1	LAMP, (B)
5	84037501	1	SWITCH ASSY, SPRINKLER, D6405-
6	353078	1	BULB,
7	9815968	1	SPEAKER, (SET OF 2)
8	9835804	1	SCREW,
9	9837139	2	HEADLAMP, (A)
10	9703399	2	BULB,
11	9819712	4	CLIP,
12	84FB15000FB	1	CLOCK, , -C6500
12	84037863	1	CLOCK, , -C0061
12	84429897	1	CLOCK, , D1164-
13	9812398	1	PLATE,
14	84011250	1	SWITCH, MIRROR ADJUSTMENT, MIRROR, -C6405
14	84037499	1	SWITCH, MIRROR ADJUSTMENT, MIRROR, D6405-
15	9501006	1	SWITCH, MIRROR ADJUSTMENT, MIRROR
16	84007080	1	SWITCH, WINDSHIELD WIPER, WIPER, -C6405
16	9504368	1	PLUG, , D6405-
16	84037500	1	SWITCH, MIRROR ADJUSTMENT, MIRROR, FOR GERMANY ONLY, D6405-
17	9835804	AR	SCREW,
18	84005699	AR	CLIP,
19	84014749	1	ANTENNA, , -C5500
20	84000651	2	RELAY,
21	84002421	1	WASHER, , D5500-
22	83961521	1	SWITCH, Interior Lamp, Door
23	84026763	1	ANTENNA, (D), D5500-
24	84017502	1	CABLE, COAX

07.39(01) ELECTRICAL EQUIPMENT, BLOW-OFF SYSTEM

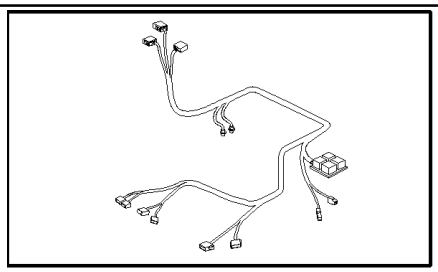

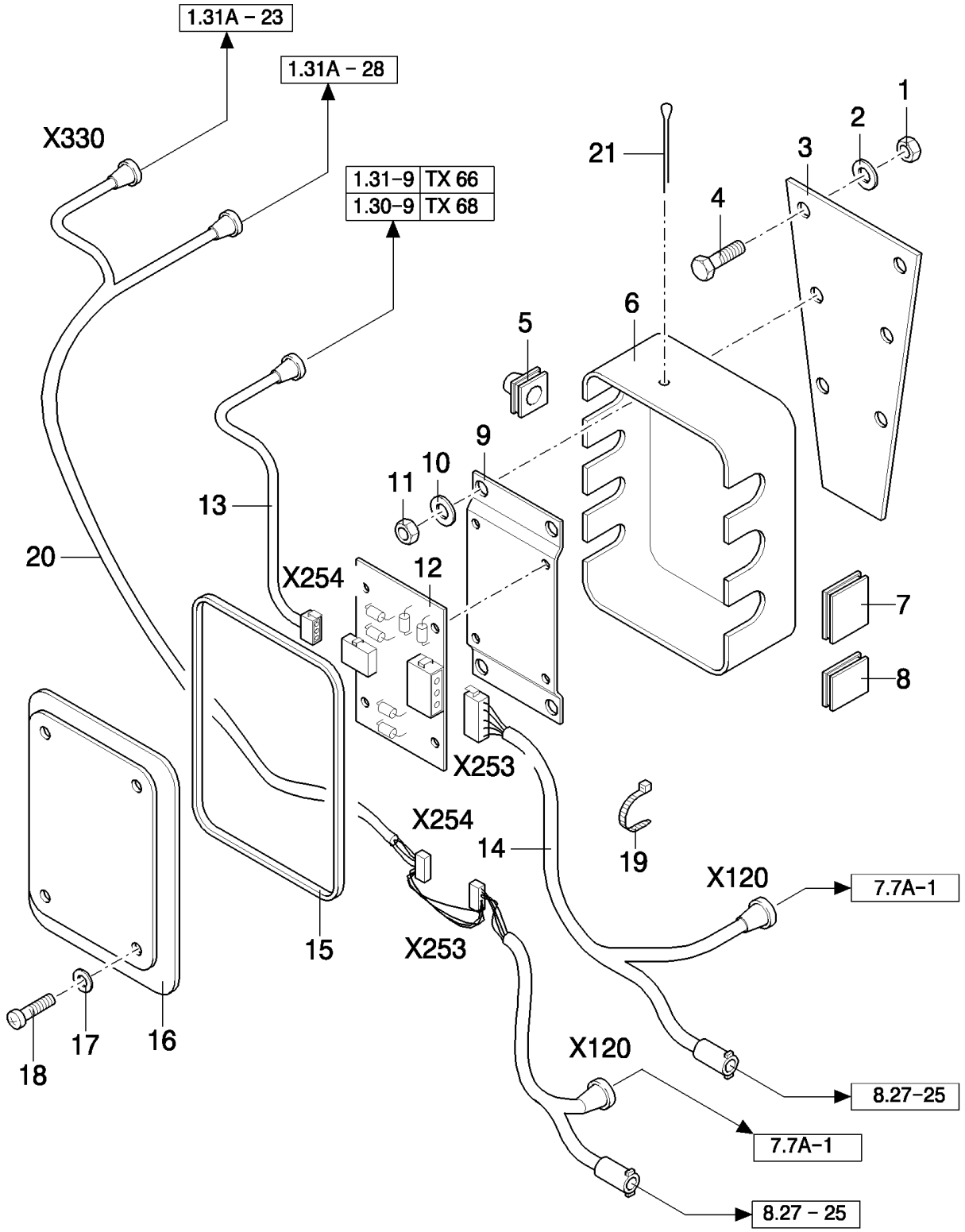

ONLY VALID UNTIL --1109999 (FOR TX64-65-66-67-68) / FOR TX63 WITHOUT REMOTE CONTROL

TX68 COMBINE - BASE UNIT

07.39(01) ELECTRICAL EQUIPMENT, BLOW-OFF SYSTEM

ссылка	Номер детали	Кол-во	Описание
1	15896221	1	NUT, M6, Cl 10,
2	322357	1	WASHER, SPRING, Belleville, M6,
3	84038878	1	BRACKET,
4	120100	1	BOLT, Hex, M6 x 20, 8.8,
5	9504337	2	PLUG,
6	9507881	1	HOUSING,
7	9504343	1	PLUG,
8	9508323	2	PLUG,
9	84038609	1	BRACKET,
10	399544	2	WASHER,
11	86508813	2	NUT, M5, Cl 8,
12	84038621	1	BOARD, PRINTED CIRCUIT,
13	84035097	1	HARNESS, WIRE, , NOT FOR TX68PLUS, FOR TX66-68 ONLY
13	84061779	1	HARNESS, WIRE, , FOR TX68PLUS ONLY, D1070-
14	84035093	1	HARNESS, WIRE, , FOR TX66-68 ONLY, NOT FOR TX68PLUS
14	84035093	1	HARNESS, WIRE, , FOR TX68PLUS ONLY, D1070-
15	9506873	1	ELEMENT, SEALING,
16	9506872	1	COVER,
17	140015	4	WASHER, 6MM
18	86511830	4	SCREW, Cross Pan Hd, M6 x 20,
19	323597	AR	STRAP, CABLE, M9 x 165 or M5 x 197,
20	84061613	1	HARNESS, WIRE, , NOT FOR TX68PLUS, FOR TX64-65-66-67-68 ONLY, D1070-
20	84061612	1	HARNESS, WIRE, , FOR TX62-63 ONLY, D1070-
21	130003	1	PIN, SPLIT (COTTER), M3.2 x 20, , D1070-

ONLY VALID UNTIL --1109999 (FOR TX64-65-66-67-68) / FOR TX63 WITHOUT REMOTE CONTROL

07.39A(01) ELECTRICAL EQUIPMENT, BLOW-OFF SYSTEM

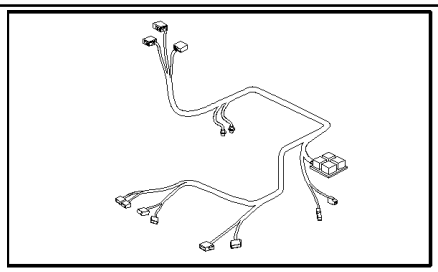

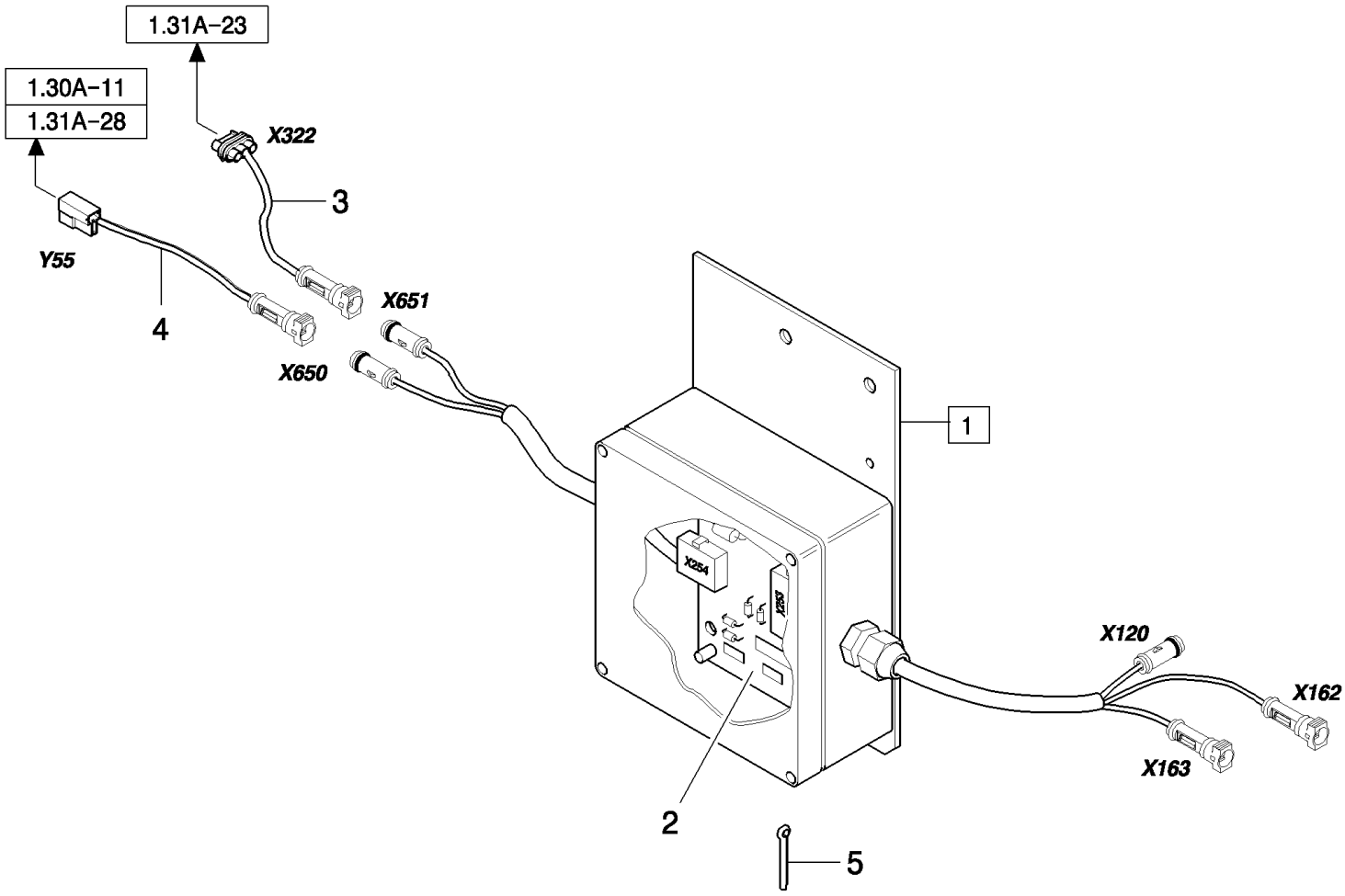

ONLY VALID FROM --1110001 / FOR TX63 WITH REMOTE CONTROL ONLY

TX68 COMBINE - BASE UNIT

07.39A(01) ELECTRICAL EQUIPMENT, BLOW-OFF SYSTEM

ссылка	Номер детали	Кол-во	Описание
1	84071427	1	ELECTRONIC UNIT, CONTROL, (2,5)
2	84038621	1	BOARD, PRINTED CIRCUIT,
3	84071523	1	HARNESS, WIRE, , NOT FOR TX68PLUS, NOT FOR TX63 WITH REMOTE CONTROL
4	84071524	1	HARNESS, WIRE, , NOT FOR TX63 WITH REMOTE CONTROL
5	130003	1	PIN, SPLIT (COTTER), M3.2 x 20,

ONLY VALID FROM --1110001 / FOR TX63 WITH REMOTE CONTROL ONLY

07.39B(01) EMERGENCY KIT FOR SB12 VALVE AND CHOPPER

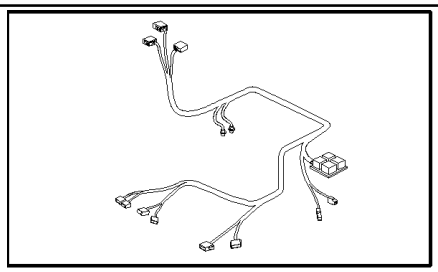

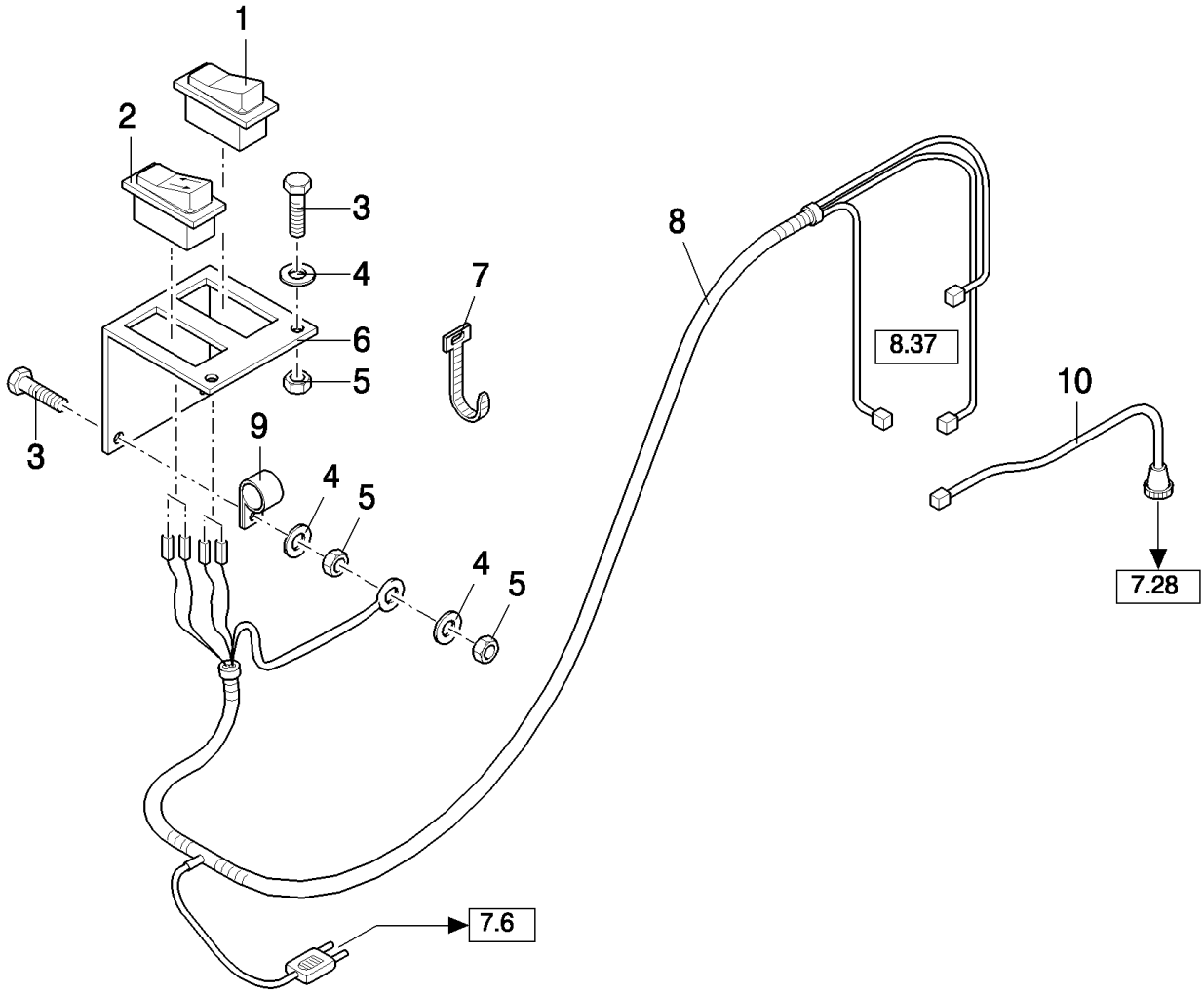

TX68 COMBINE - BASE UNIT

07.39B(01) EMERGENCY KIT FOR SB12 VALVE AND CHOPPER

ссылка	Номер детали	Кол-во	Описание
1	84037500	1	SWITCH, MIRROR ADJUSTMENT,
2	84022144	1	SWITCH ASSY,
3	120101	3	BOLT, Hex, M6 x 30, 8.8, Full Thd,
4	322357	4	WASHER, SPRING, Belleville, M6,
5	15896221	4	NUT, M6, Cl 10,
6	84043601	1	BRACKET,
7	323597	AR	STRAP, CABLE, M9 x 165 or M5 x 197,
8	84035577	1	HARNESS, WIRE,
9	9503931	1	CLAMP, RP22
10	84035797	1	HARNESS, WIRE,

07.40(01) TERMINALS AND TERMINAL CONNECTORS

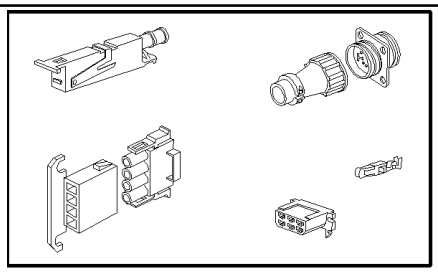

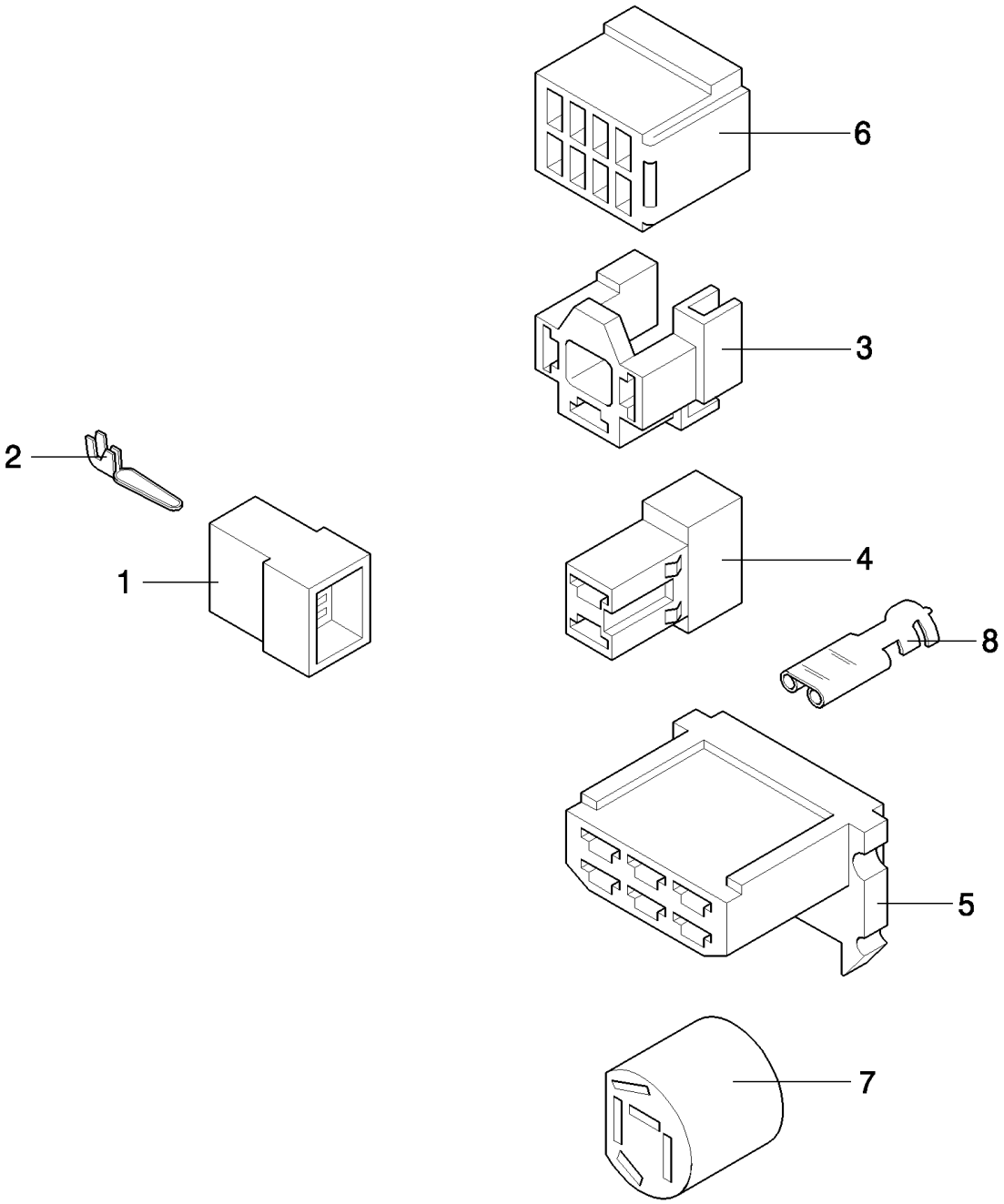

TX68 COMBINE - BASE UNIT

07.40(01) TERMINALS AND TERMINAL CONNECTORS

ссылка	Номер детали	Кол-во	Описание
1	334699	AR	CONNECTOR, WIRE, 2-WH-M
2	334724	AR	TERMINAL, M0.8-2.5
3	751307	AR	TERMINAL, 3-CL-M
4	334698	AR	CONNECTOR, ELEC, 2-WH-F
4	84015523	AR	CONNECTOR, ELEC, 2-CL
4	334589	AR	CONNECTOR, WIRE, 1-WH-F
5	334595	AR	TERMINAL, 6-WH-F
6	9503638	AR	CONNECTOR, WIRE, 8-BL-F
6	9503639	AR	CONNECTOR, WIRE, 2-BL-F
7	9850818	AR	TERMINAL, 5-BK-F
8	334588	AR	TERMINAL, F1.0-2.5
8	334594	AR	TERMINAL, F4-6
8	751308	AR	TERMINAL, F,FLAG TYPE

07.41(01) TERMINALS AND TERMINAL CONNECTORS

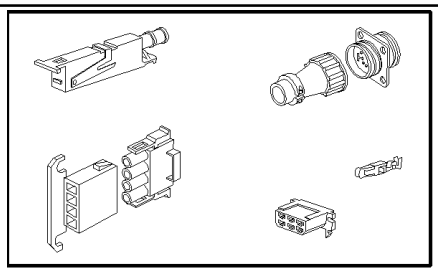

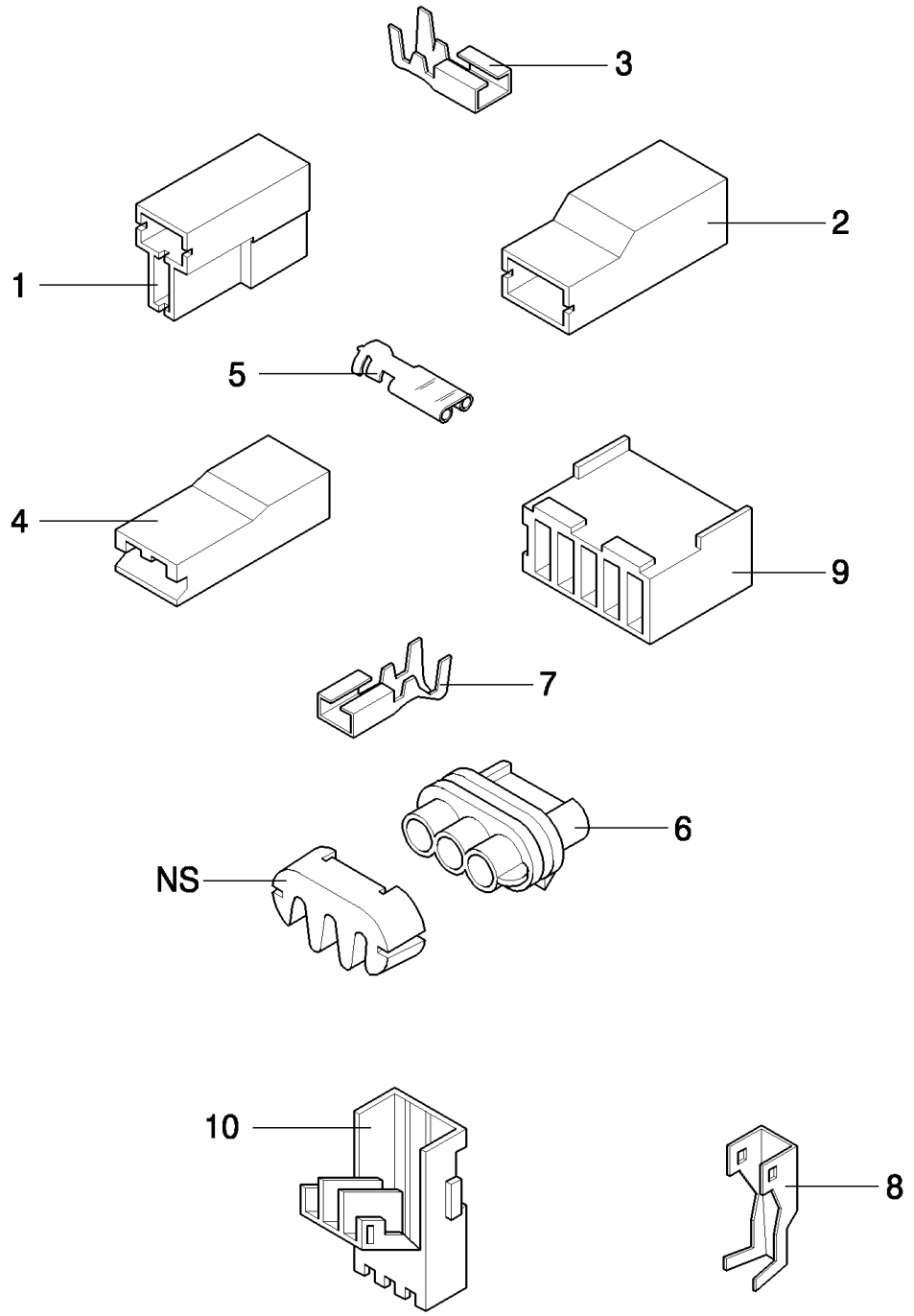

TX68 COMBINE - BASE UNIT

07.41(01) TERMINALS AND TERMINAL CONNECTORS

ссылка	Номер детали	Кол-во	Описание
1	446133	AR	CONNECTOR, ELEC, 2-BK-F
2	441159	AR	CONNECTOR, WIRE, 1-BK-F
3	441166	AR	TERMINAL, M0.7-2
3	441167	AR	TERMINAL, M2.5-4
3	919415	AR	TERMINAL, M4-6
4	350674	AR	CONNECTOR, WIRE,
5	430026	AR	TERMINAL, 1-2.5
6	84000181	AR	TERMINAL, 3-BK-F
7	84000182	AR	TERMINAL, 1-2
8	84007052	AR	TERMINAL,
9	84007631	AR	TERMINAL, 5-BK-M
10	84007053	AR	CONNECTOR, WIRE, 3-BK

07.42(01) TERMINALS AND TERMINAL CONNECTORS

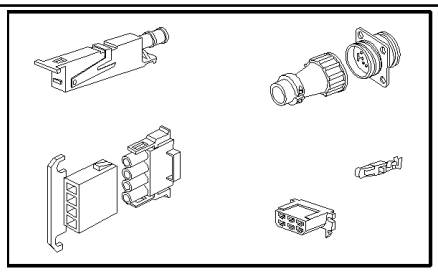

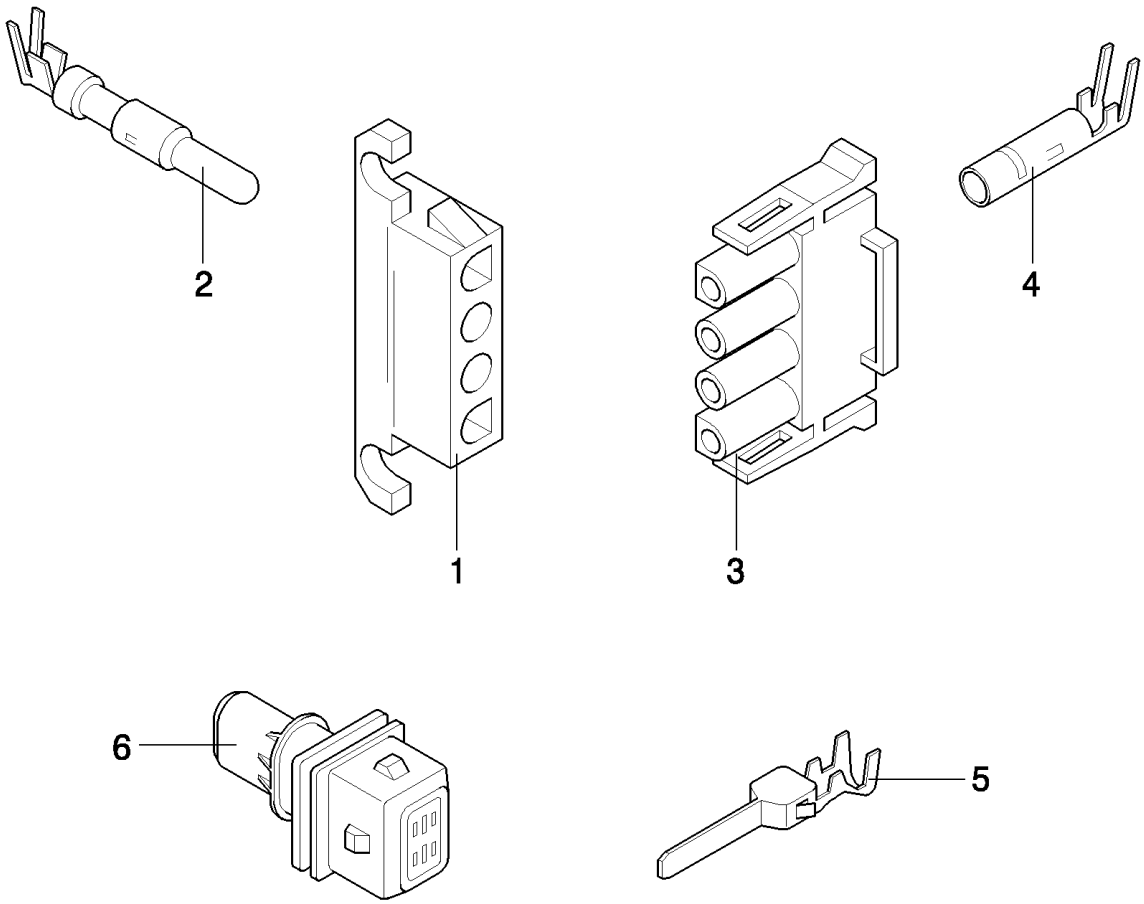

TX68 COMBINE - BASE UNIT

07.42(01) TERMINALS AND TERMINAL CONNECTORS

ссылка	Номер детали	Кол-во	Описание
1	9509740	AR	CONNECTOR, ELEC, 9-RD-F
2	9509742	AR	CONNECTOR, ELEC, M0.5-2.1
3	442242	AR	CONNECTOR, ELEC, 4-RD-M
3	9503129	AR	CONNECTOR, WIRE, 9-RD-M
3	9850920	AR	TERMINAL, 15-RD-M
3	84004676	AR	CONNECTOR, WIRE, 3-WH-M
3	9511181	AR	CONNECTOR, WIRE, 6-RD-M
4	442243	AR	CONNECTOR, ELEC, F1.5-3.3
5	84045102	AR	TERMINAL,
6	84045103	AR	CONNECTOR, WIRE,

07.43(01) TERMINALS AND TERMINAL CONNECTORS

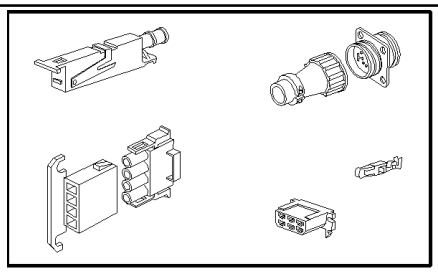

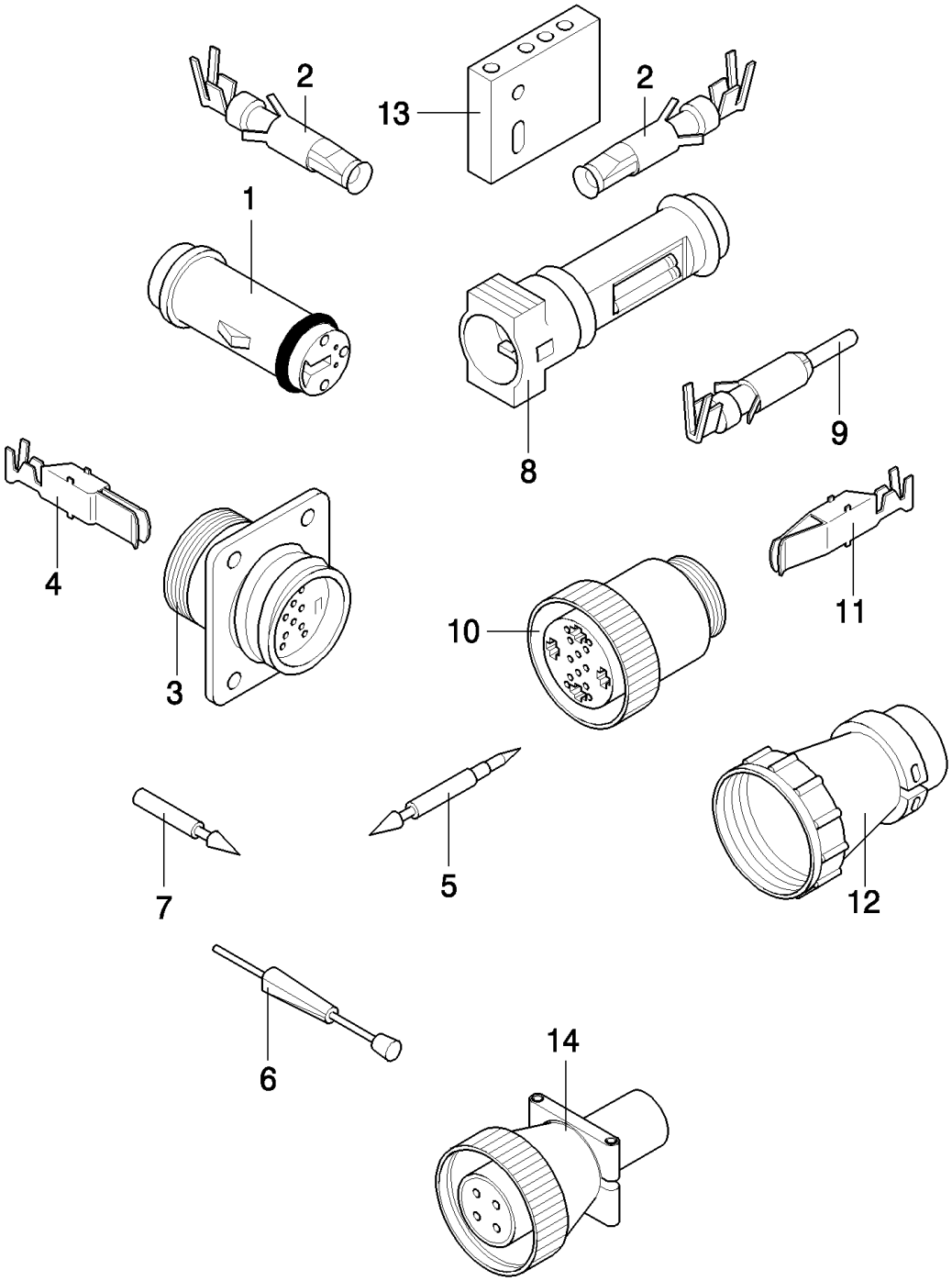

TX68 COMBINE - BASE UNIT

07.43(01) TERMINALS AND TERMINAL CONNECTORS

ссылка	Номер детали	Кол-во	Описание
1	916785	AR	CONNECTOR, ELEC, 2-BK-F
1	9510662	AR	CONNECTOR, WIRE, 3-BK-F
1	916790	AR	CONNECTOR, WIRE, 4-BK-F
2	9513123	AR	TERMINAL, F0.5-1.5
2	445522	AR	TERMINAL, F1.5-2.5
3	445746	AR	CONNECTOR, WIRE, 3-BK-M
3	9504366	AR	CONNECTOR, ELEC, 7-BK-M
3	9504363	AR	CONNECTOR, WIRE, 9-BK-M
3	447569	AR	CONNECTOR, WIRE, 16-BK-M
3	9818033	AR	CONNECTOR, WIRE, 22-BK-M
3	9504364	AR	CONNECTOR, ELEC, 24-BK-M
3	9814978	AR	CONNECTOR, ELEC, 37-BK-M
4	445517	AR	TERMINAL, M1.5-4
4	445520	AR	TERMINAL, M5-8
5	80916795	AR	TOOL, SPECIAL, Mounting
6	679968	AR	TOOL, SPECIAL, DISMOUNTING
7	916794	AR	TOOL, SPECIAL, MOUNTING
8	916786	AR	CONNECTOR, WIRE, 2-BK-M
8	9510663	AR	CONNECTOR, ELEC, 3-BK-M
8	916791	AR	CONNECTOR, WIRE, 4-BK-M
9	9516242	AR	TERMINAL, M0.5-1.5
9	445521	AR	TERMINAL, M1-2.5
10	80445745	AR	CONNECTOR, WIRE, 3-BK-F
10	9504367	AR	CONNECTOR, ELEC, 7-BK-F
10	9504361	AR	CONNECTOR, WIRE, 9-BK-F
10	445516	AR	CONNECTOR, WIRE, 16-BK-F
10	9818031	AR	CONNECTOR, WIRE, 22-BK-F
10	9504362	AR	CONNECTOR, ELEC, 24-BK-F
10	9814979	AR	CONNECTOR, ELEC, 37-BK-F
11	445519	AR	TERMINAL, F1.5-4
11	445518	AR	TERMINAL, F5-8
12	445525	AR	COLLAR, 7 & 16 to 37 POL.
12	9511904	AR	COLLAR, 6 & 9 POL.
12	80445526	AR	COLLAR, 3 POL.
13	9504961	AR	CONNECTOR, ELEC, 4-BK-F
14	84004080	AR	CONNECTOR, WIRE, 4 POL. (INCL. TERM.)

07.44(01) TERMINALS AND TERMINAL CONNECTORS

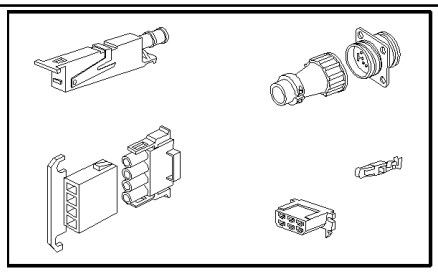

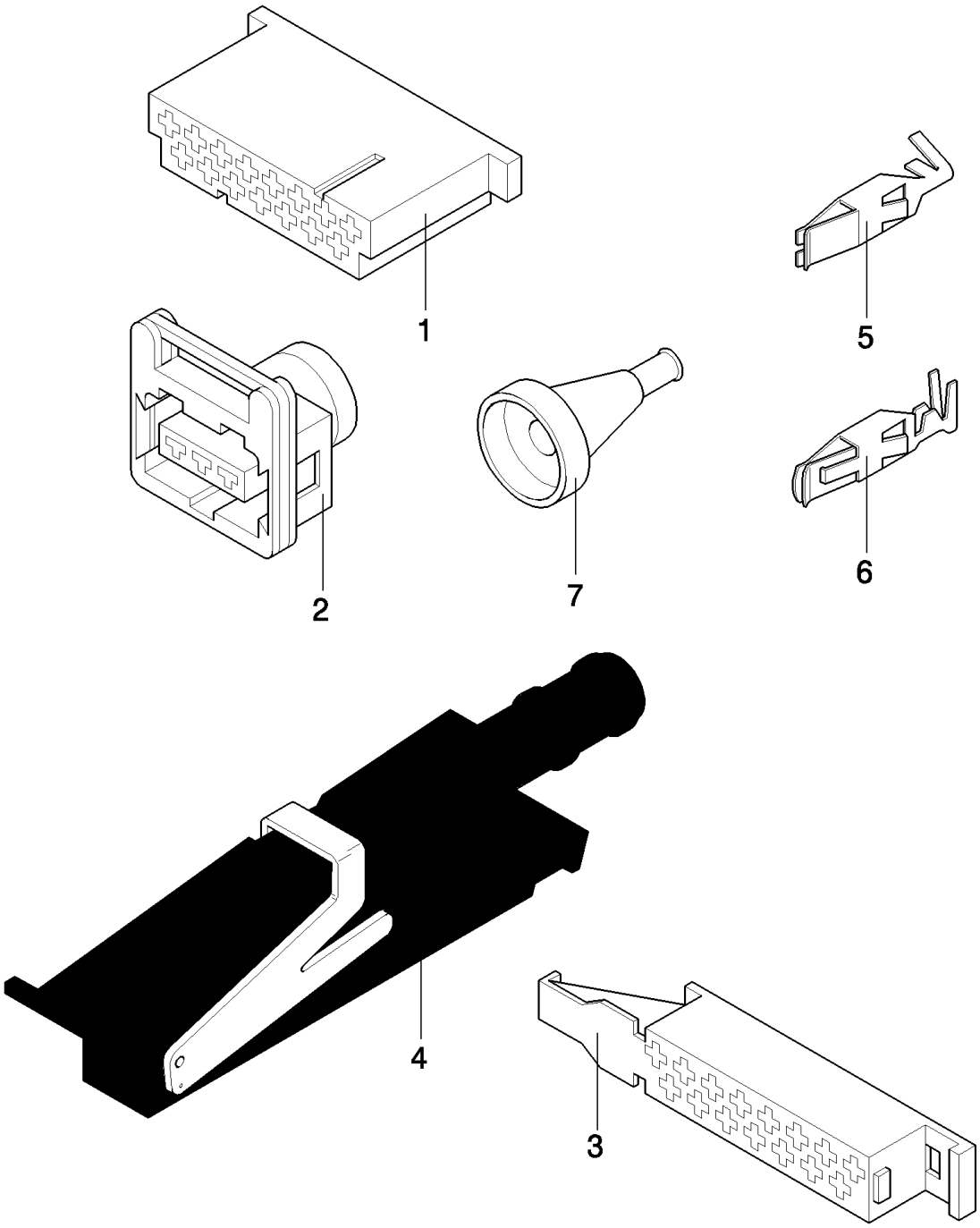

TX68 COMBINE - BASE UNIT

07.44(01) TERMINALS AND TERMINAL CONNECTORS

ссылка	Номер детали	Кол-во	Описание
1	9811261	AR	CONNECTOR, ELEC, 15-BK-F
2	9850867	AR	CONNECTOR, WIRE, 4-BK-F
2	9850554	AR	CONNECTOR, ELEC, 3-BK-F
2	9850555	AR	CONNECTOR, ELEC, 2-BK-F
3	9510666	AR	CONNECTOR, WIRE, 25-BK
4	9818955	AR	CONNECTOR, ELEC, 55-BK
5	9815256	AR	CONNECTOR, ELEC, F0.5-1.5
6	9813989	AR	TERMINAL, F1-2.5
7	9850832	AR	COVER, CAP, 2 POL
7	89850833	AR	COVER, CAP, 3 POL
7	9850869	AR	COVER, CAP, 4 POL

SECTIONS	**SECTIONS**	**SECCIONES**	**AFSNIT**
SEZIONI	**ABSCHNITTE**	**SECÇÕES**	**SECTIES**

SEC. 8

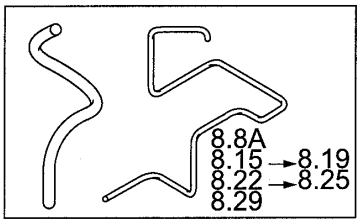

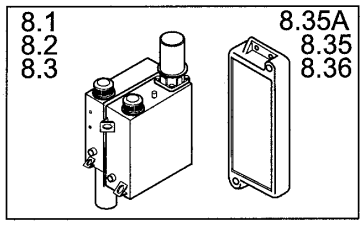

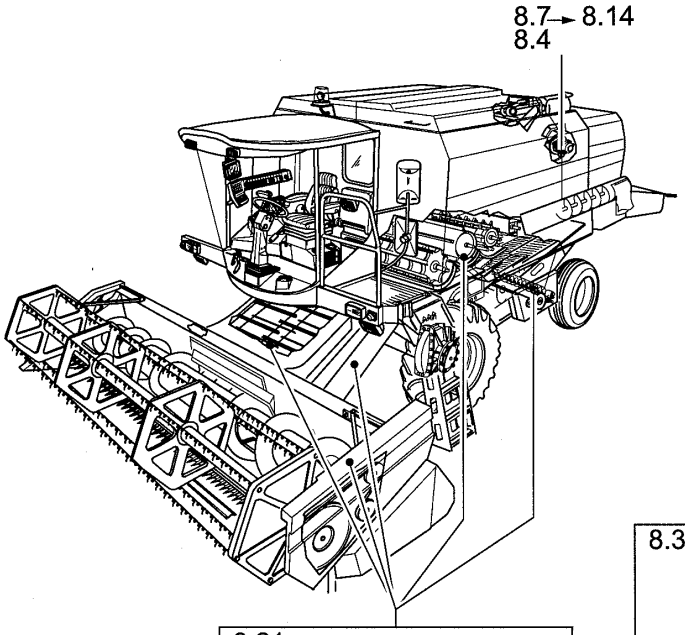

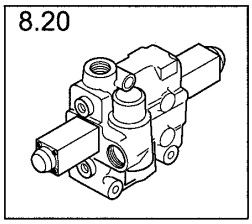

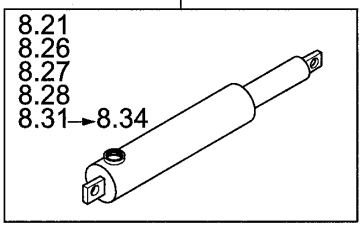

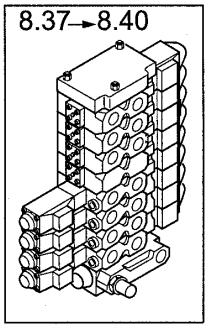

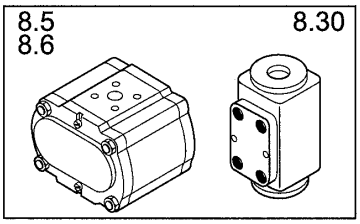

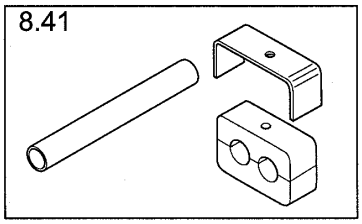

ссылка	Номер детали	Кол-во	Описание

08.01(01) HYDRAULIC TANK

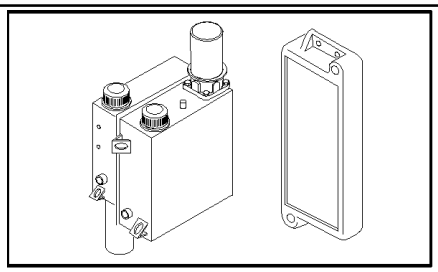

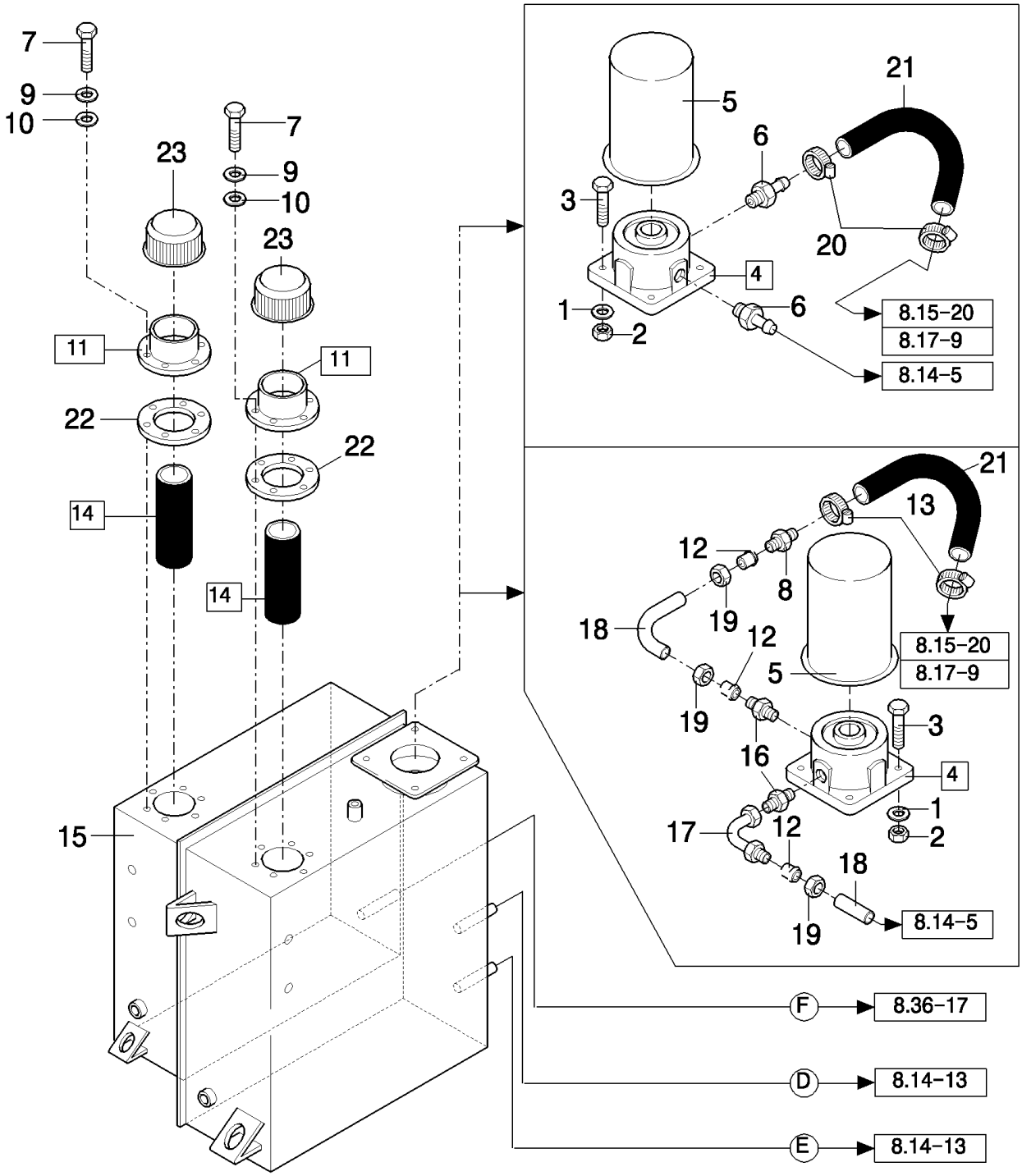

TX68 COMBINE - BASE UNIT

08.01(01) HYDRAULIC TANK

ссылка	Номер детали	Кол-во	Описание
1	322358	AR	WASHER, SPRING, Belleville, M8,
2	9706690	AR	NUT, M8, Cl 8,
3	43127	AR	BOLT, Hex, M8 x 25, 8.8,
4	9811704	1	FILTER, HYDRAULIC OIL, (5)
5	9814477	1	FILTER, ELEMENT,
6	457407	2	CONNECTOR, HYD.,
7	120098	12	BOLT, Hex, M5 x 20, 8.8, Full Thd,
8	449161	1	CONNECTOR, HYD.,
9	140014	12	WASHER, M5 x 10 x 1,
10	373817	12	ELEMENT, SEALING,
11	9508294	1	CAP, FILLER, (14,23), FOR HYDRAULIC OIL ONLY
11	9508292	1	FILTER, (14,23), FOR HYDROSTATIC OIL ONLY
12	335168	3	FERRULE,
13	326082	AR	CLAMP,
14	9811443	2	FILTER, ELEMENT, (22) UCC, BSN C411
14	87054105	2	KIT, , ASN D412
15	84000629	1	RESERVOIR, HYDRAULIC OIL, , -C6405
15	84032957	1	RESERVOIR, HYDRAULIC OIL, , -C0032
15	84043683	1	RESERVOIR, HYDRAULIC OIL, , D1033-
16	9501819	2	CONNECTOR, HYD.,
17	447770	1	CONNECTOR, HYD., , -C1032
18	371534	AR	TUBE, RIGID, DIA.:18MM,L:2M, -C1032
19	335170	3	NUT,
20	326082	2	CLAMP,
21	451556	1	HOSE, , -C1056
21	84056313	1	HOSE, , D1057-
22	84037210	1	KIT, SEALS, UCC, BSN C411
22	87054107	1	KIT, SEALS, , ASN D412
23	NSS	1	NOT SERVICED SEPARATELY, UCC, BSN C411
23	87054106	1	CAP, FILLER, , ASN D412

08.02(01) HYDRAULIC TANK

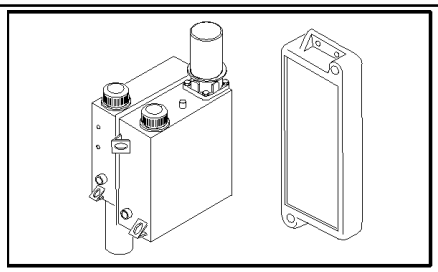

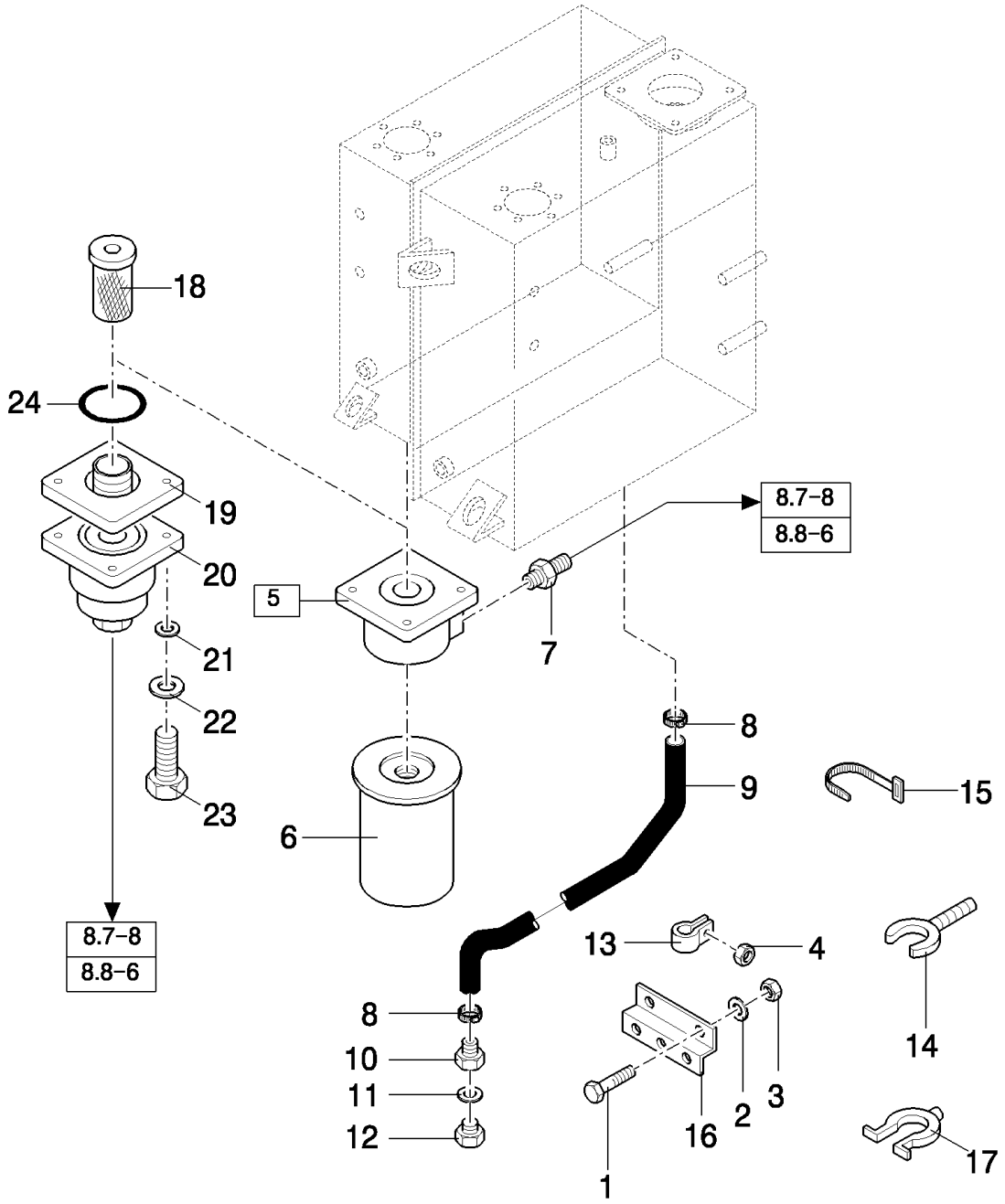

TX68 COMBINE - BASE UNIT

08.02(01) HYDRAULIC TANK

ссылка	Номер детали	Кол-во	Описание
1	120100	2	BOLT, Hex, M6 x 20, 8.8,
2	322357	2	WASHER, SPRING, Belleville, M6,
3	15896221	2	NUT, M6, Cl 10,
4	9706690	AR	NUT, M8, Cl 8,
5	457411	1	FILTER, ENGINE OIL, (6), -C6405
6	457412	1	FILTER, ELEMENT, , -C6405
7	9516479	1	CONNECTOR, HYD., , -C6405
8	326082	AR	CLAMP,
9	9516094	2	HOSE,
10	80326079	2	CONNECTOR, HYD.,
11	722441	2	GASKET,
12	150060	2	PLUG,
13	418407	AR	CLAMP,
14	326080	AR	CLAMP,
15	396718	1	STRAP,
16	9513698	1	SUPPORT,
17	9511662	4	CLAMP,
18	84031924	1	FILTER, HYDRAULIC OIL,
19	84031920	1	ELEMENT, SEALING, , -C1032
20	84031917	1	SUPPORT, , -C1032
20	84043513	1	SUPPORT, , D1033-
21	373816	4	WASHER, COPPER, , -C1032
22	140015	4	WASHER,
23	120100	4	BOLT, Hex, M6 x 20, 8.8,
24	9840056	1	O-RING, -248, 70 Duro, 4.734" ID x .139" Thk, , D1033-

08.03(01) HYDRAULIC TANK

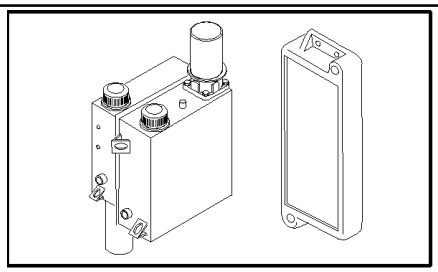

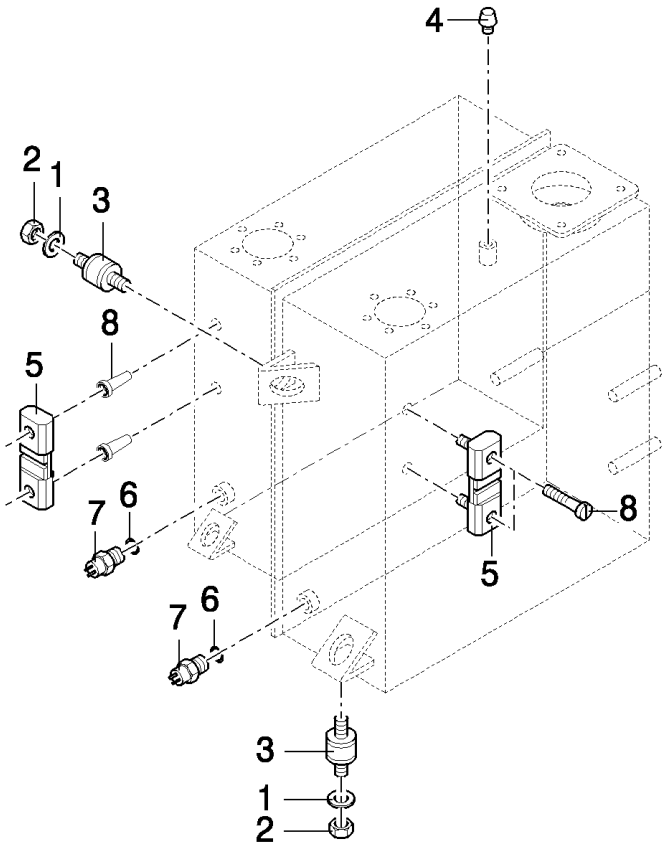

TX68 COMBINE - BASE UNIT

08.03(01) HYDRAULIC TANK

ссылка	Номер детали	Кол-во	Описание
1	322358	8	WASHER, SPRING, Belleville, M8,
2	9706690	8	NUT, M8, Cl 8,
3	9833258	4	SHOCK ABSORBER,
4	9817518	1	BREATHER,
5	923011	2	INDICATOR,
6	722441	2	GASKET,
7	434528	2	SENDER UNIT, , -C5620
7	84021678	2	SENDER UNIT, , D5620-
8	9814028	AR	NUT,

08.04(01) HYDRAULICS FOR NH675 AND IVECO ENGINE

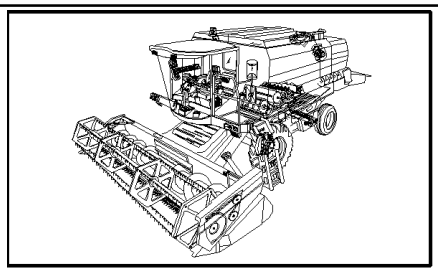

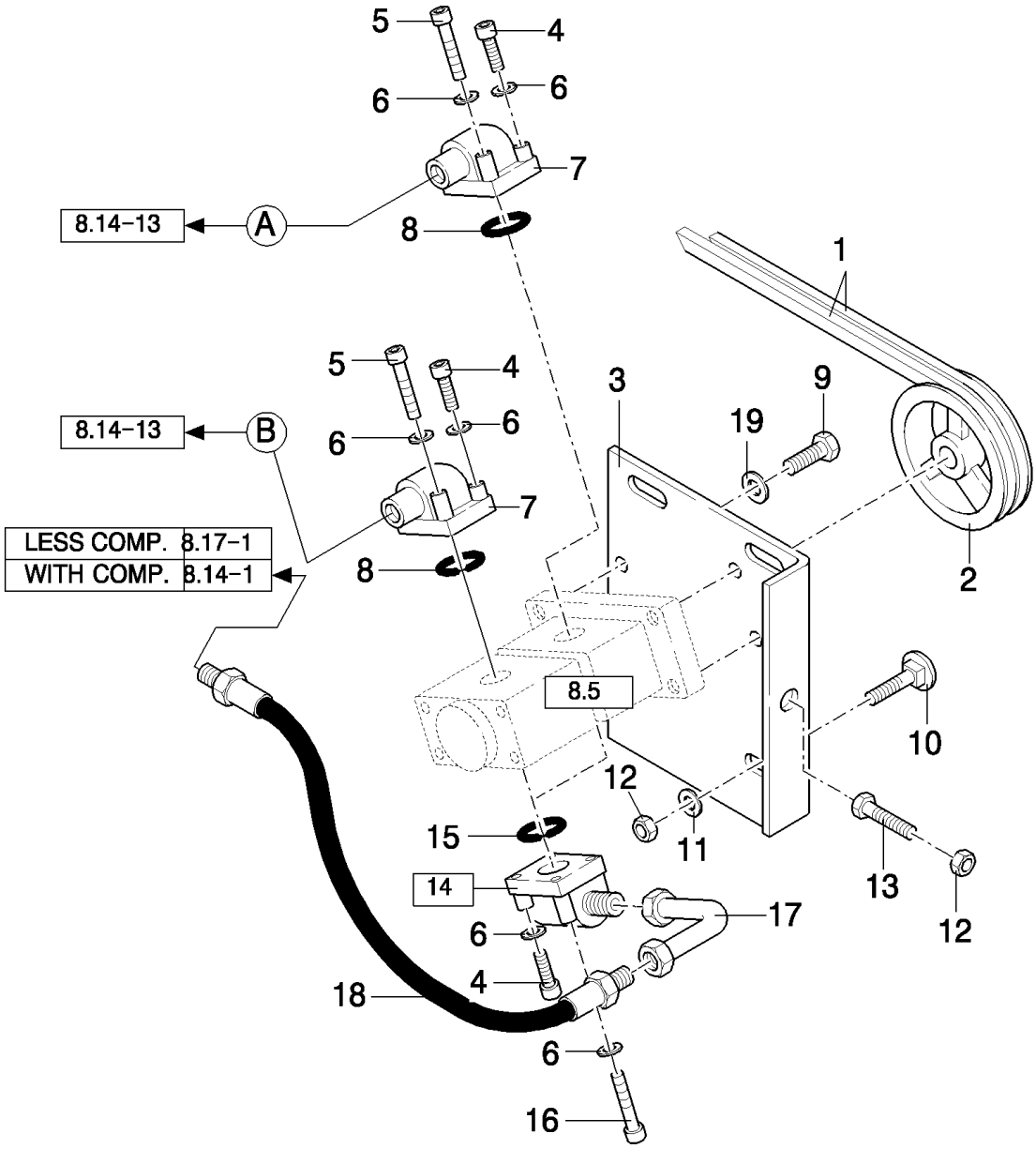

TX68 COMBINE - BASE UNIT

08.04(01) HYDRAULICS FOR NH675 AND IVECO ENGINE

ссылка	Номер детали	Кол-во	Описание
1	9835816	1	BELTS, SET OF 2, , FOR TX68PLUS ONLY
1	9835816	1	BELTS, SET OF 2, , NOT FOR TX68PLUS, FOR TX68 ONLY, -C1076
1	9839030	1	SET OF BELTS, , FOR TX63-64-65-66-67 ONLY, NOT FOR TX68PLUS, D1077-
1	9839030	1	SET OF BELTS, , FOR TX63-64-65-66-67 ONLY
1	84000133	1	SET OF BELTS, , FOR TX62 ONLY, -C1032
1	9839030	1	SET OF BELTS, , FOR TX62 ONLY, D1033-
2	9833885	1	PULLEY, , FOR TX63-64-65-66-67-68 ONLY
2	89833887	1	PULLEY, , FOR TX62 ONLY, -C1032
2	9833885	1	PULLEY, , FOR TX62 ONLY, D1033-
3	9835117	1	SUPPORT, , FOR TX68PLUS ONLY
3	9835117	1	SUPPORT, , NOT FOR TX68PLUS, FOR TX68 ONLY, -C1076
3	84035991	1	SUPPORT, , FOR TX68 ONLY, NOT FOR TX68PLUS, D1077-
3	9838946	1	SUPPORT, , FOR TX62-63-64-65-66-67 ONLY, -C1032
3	84035991	1	SUPPORT, , FOR TX62-63-64-65-66-67 ONLY, D1033-
4	84089718	4	SCREW, Hex Soc Hd, M6 x 20, 8.8,
5	356464	4	SCREW, M6x50
6	140044	16	WASHER,
7	753432	2	FILTER,
8	167266	2	O-RING, 12-1, 90 Duro, .924 ID x .116" Thk,
9	43128	4	BOLT, Hex, M8 x 30, 8.8,
10	338949	3	BOLT, CARRIAGE, Short NK, M10 x 25, Cl8.8, Full Thd,
11	140045	3	WASHER, SPRING, Belleville, M10,
12	100016	5	NUT, M10, Cl 8,
13	360296	1	BOLT, Hex, M10 x 100, 8.8, Full Thd, M10x100
14	337208	2	ELBOW, (4,6,15,16)
15	304967	2	O-RING,
16	356463	4	SCREW,
17	435349	2	ELBOW,
18	426397	2	HOSE, FLEXIBLE,
19	412654	4	WASHER, LOCK,

08.05(01) HYDRAULIC PUMP

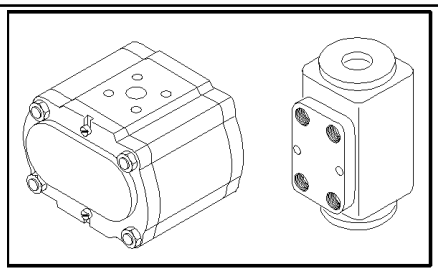

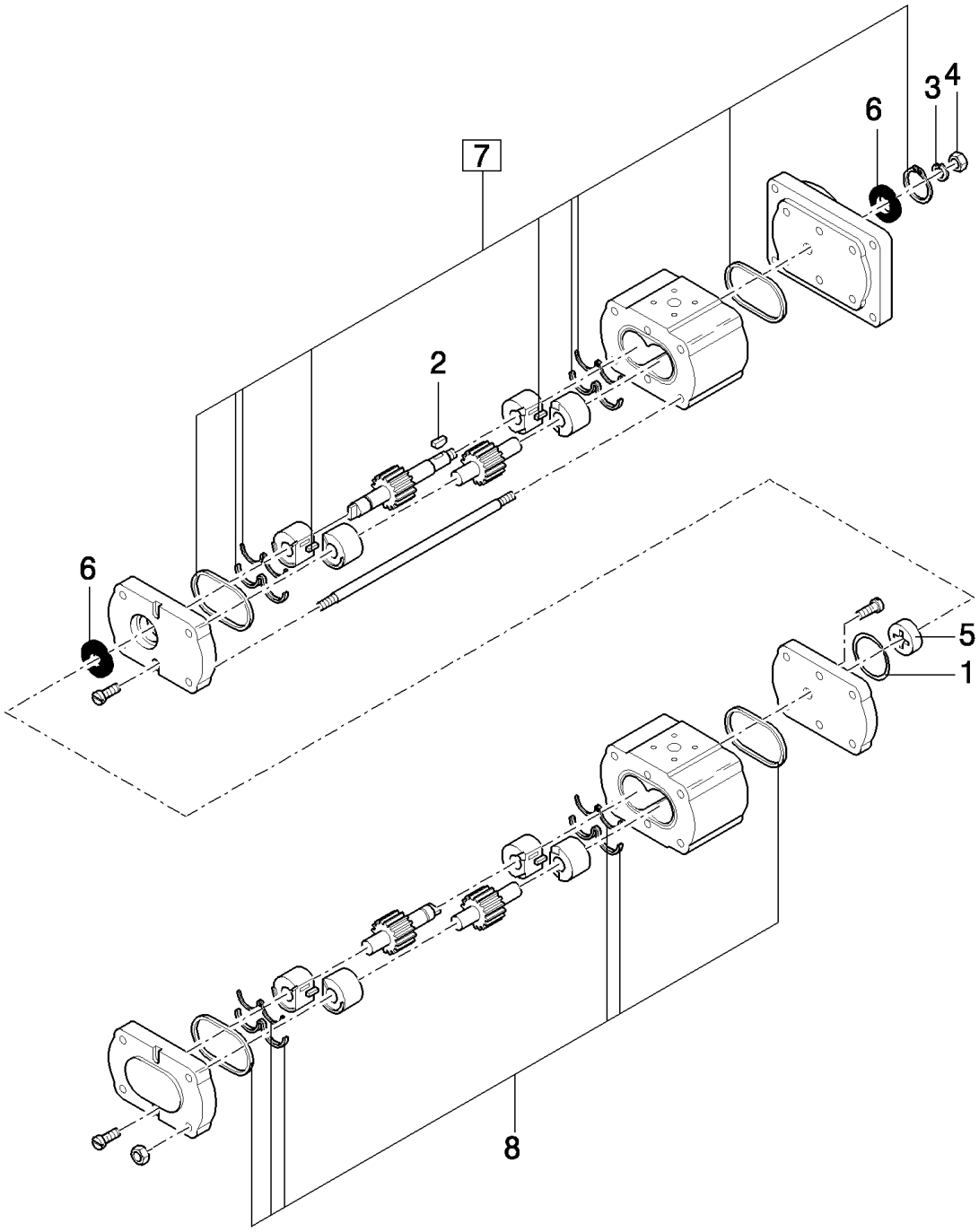

ONLY VALID UNTIL 4804999 (TX62) - 4904999 (TX64) - 6604999 (TX65) - 5009999 (TX66) - 5109999 (TX68)

TX68 COMBINE - BASE UNIT

08.05(01) HYDRAULIC PUMP

ссылка	Номер детали	Кол-во	Описание
	9512695	1	PUMP, SMALL, (1 to 8), FOR TX64-65-66-68 ONLY
	9513448	1	PUMP, SMALL, (1 to 8), FOR TX62 ONLY
1	9966469	1	GASKET,
2	10205710	1	KEY, WOODRUFF, M3 x 5 12.65,
3	140046	1	WASHER, Belleville, M12,
4	9957976	1	NUT, M12
5	79068046	1	BUSHING,
6	9966467	2	GASKET,
7	387506	1	KIT, SEALS, FRONT [6(1x)]
8	42481597	1	KIT, SEALS, REAR

ONLY VALID UNTIL 4804999 (TX62) - 4904999 (TX64) - 6604999 (TX65) - 5009999 (TX66) - 5109999 (TX68)

08.06(01) HYDRAULIC PUMP

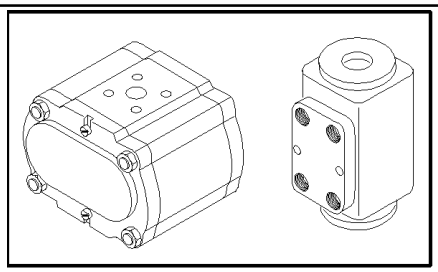

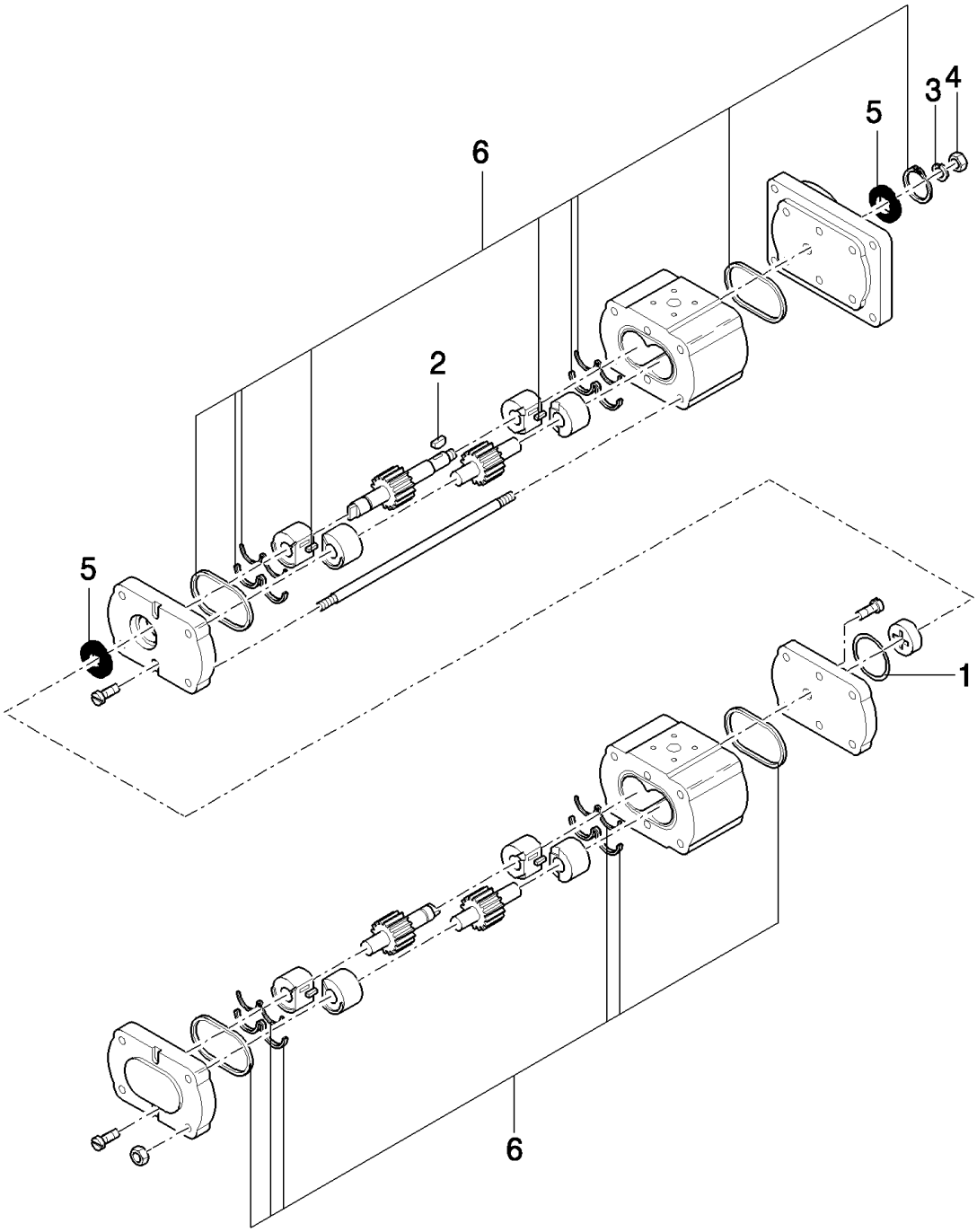

ONLY VALID FROM 4805001 (TX62) - 461033001 (TX63) - 4905001 (TX64) - 6605001 (TX65) - 5010001 (TX66) - 4404001 (TX67) - 5110001 (TX68)

TX68 COMBINE - BASE UNIT

08.06(01) HYDRAULIC PUMP

ссылка	Номер детали	Кол-во	Описание
	84019906	1	PUMP, SMALL, (1 to 6), -C1179
	84431393	1	PUMP, SMALL, (1 to 6), D1180-
1	9966469	1	GASKET,
2	10205710	1	KEY, WOODRUFF, M3 x 5 12.65,
3	140046	1	WASHER, Belleville, M12,
4	9957976	1	NUT, M12
5	9966467	2	GASKET,
6	42481597	1	KIT, SEALS, , -C1179
6	84607229	1	KIT, SEALS, , D1180-

ONLY VALID FROM 4805001 (TX62) - 461033001 (TX63) - 4905001 (TX64) - 6605001 (TX65) - 5010001 (TX66) - 4404001 (TX67) - 5110001 (TX68)

08.08(01) HYDROSTATIC LINES

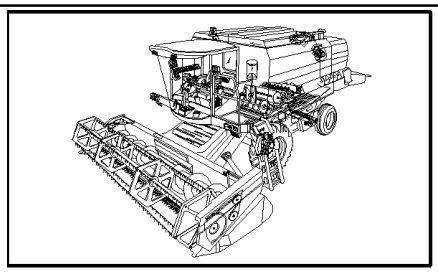

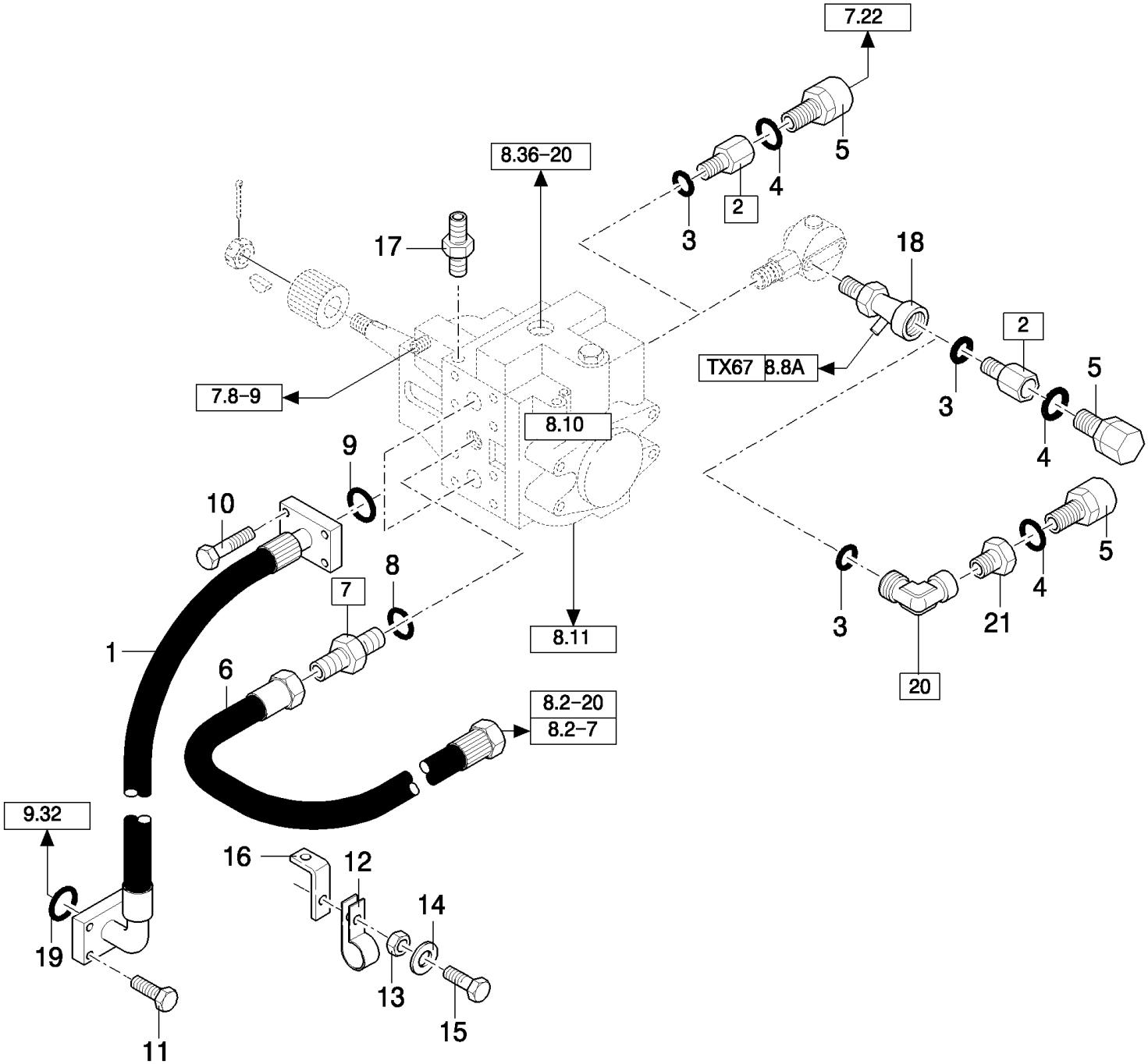

ONLY VALID FROM 481033001 (TX62) - 461033001 (TX63) - 491033001 (TX64) - 661033001 (TX65) - 501033001 (TX66)

TX68 COMBINE - BASE UNIT

08.08(01) HYDROSTATIC LINES

ссылка	Номер детали	Кол-во	Описание
1	9818653	2	HOSE, FLEXIBLE, , FOR TX68 ONLY, -C1032
1	84037248	2	HOSE, FLEXIBLE, , FOR TX68 ONLY, D1033-
1	84037248	2	HOSE, FLEXIBLE, , FOR TX62-63-64-65-66-67 ONLY
2	9811374	1	CONNECTOR, HYD., (3), -C1127
3	9617873	1	O-RING, 6-1, 90 Duro, .468" ID x .078" Thk,
4	220049	1	WASHER, SEALING,
5	434529	1	SENDER UNIT,
6	9818306	1	HOSE, FLEXIBLE, , -C6405
6	84037818	1	HOSE, FLEXIBLE, , D6405-
7	9511909	1	CONNECTOR, HYD., (8)
8	570186	1	O-RING, 20-1, 90 Duro, 1.475" ID x .116" Thk,
9	235757	2	O-RING, -222, 90 Duro, 1.484" ID x .139" Thk,
10	84015554	8	BOLT, Hex, 1/2"-13 x 1 3/4", 12.9,
11	84015552	8	BOLT, Hex, 7/16"-14 x 1/2", 12.9,
12	455556	2	CLAMP,
13	15896221	2	NUT, M6, Cl 10,
14	322357	2	WASHER, SPRING, Belleville, M6,
15	120100	2	BOLT, Hex, M6 x 20, 8.8,
16	84031947	1	BRACKET, , -C1033
17	84021707	1	CONNECTOR, HYD.,
18	84037988	1	CONNECTION, 3 WAY, , FOR TX67 ONLY
19	353108	2	O-RING, -219, 70 Duro, 1.296" ID x .139" Thk,
20	261470	1	ELBOW, 90є, Flareless, 9/16"-18, (3), D1128-
21	80452037	1	ADAPTER, , D1128-

ONLY VALID FROM 481033001 (TX62) - 461033001 (TX63) - 491033001 (TX64) - 661033001 (TX65) - 501033001 (TX66)

08.10(01) HYDROSTATIC PUMP - UNTIL --5123999

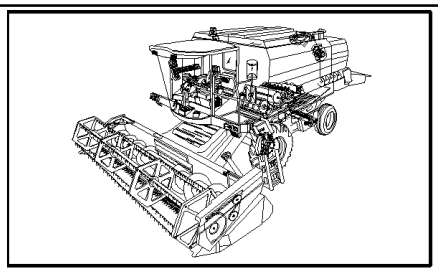

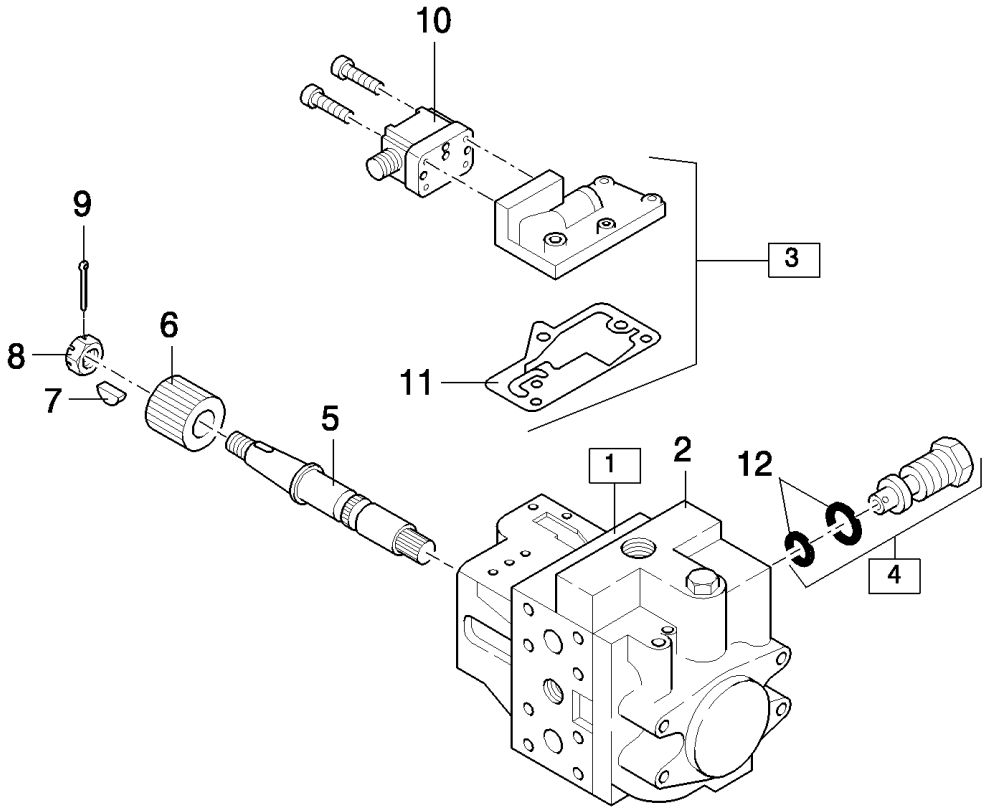

TX68 COMBINE - BASE UNIT

08.10(01) HYDROSTATIC PUMP - UNTIL --5123999

ссылка	Номер детали	Кол-во	Описание
1	9811195	1	PUMP, HYDROSTATIC, , INCL. REFS.2 TO 11 EXCEPT REF.6
2	84019068	1	KIT, SEALS,
3	84019071	1	VALVE, HYDRAULIC, (10,11)
4	84019070	2	VALVE, HYDRAULIC, (12)
5	84019069	1	SPINDLE,
6	452311	1	JOINT, UNIVERSAL,
7	913495	1	KEY,
8	84019072	1	NUT, 1 1/4"-18UNEF
9	84019067	1	PIN, SPLIT (COTTER),
10	84041359	1	ELECTROMAGNET,
11	84041983	1	GASKET,
12	84068523	1	O-RING, DIA.:37MM
12	84068524	1	O-RING, DIA.:30MM

08.10A(01) HYDROSTATIC PUMP

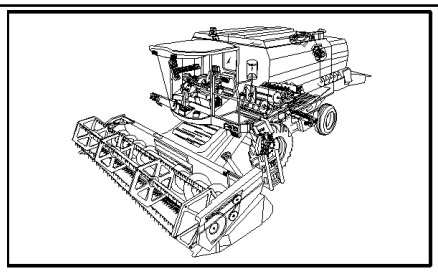

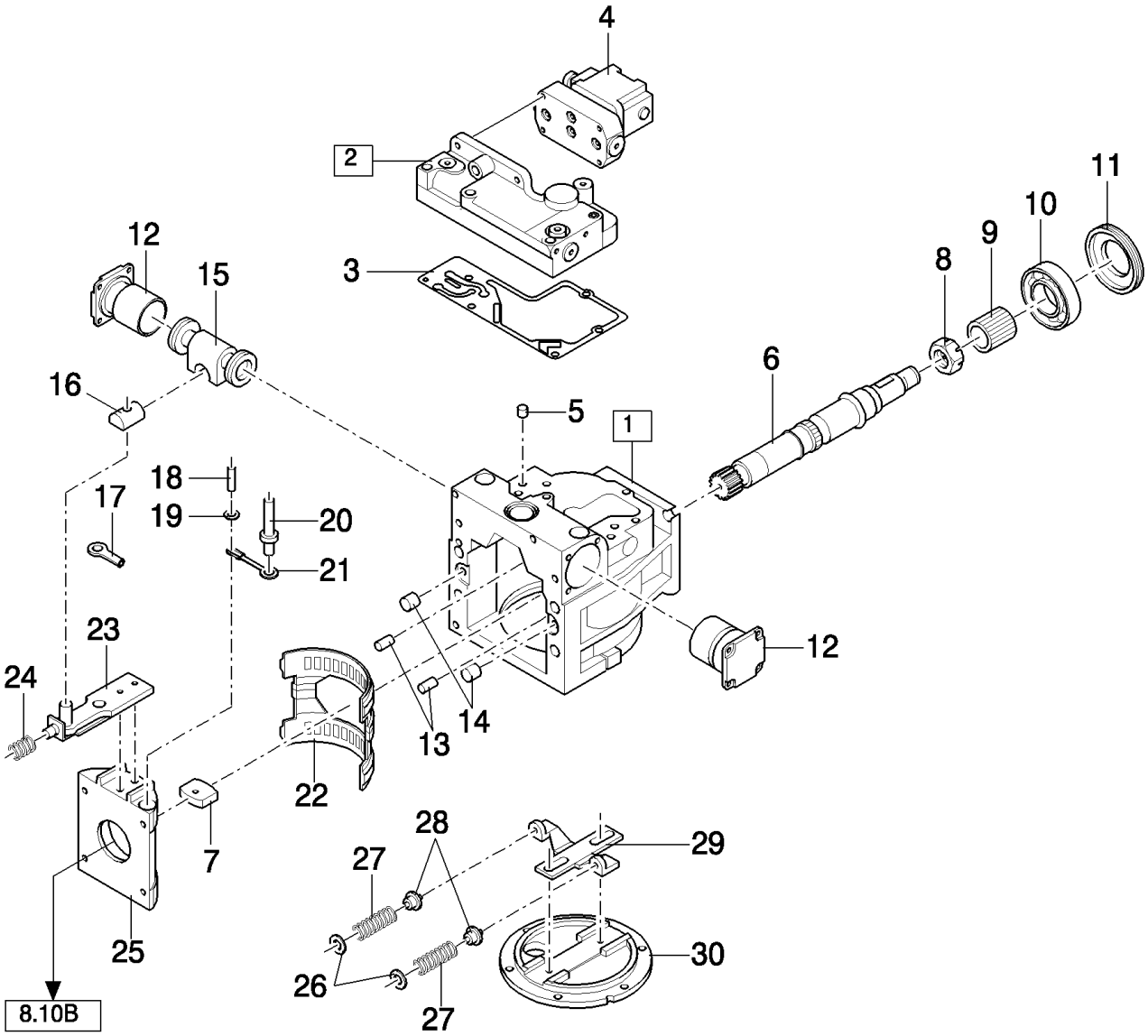

ONLY VALID FROM 481033001 (TX62) - 461033001 (TX63) - 491033001 (TX64) - 661033001 (TX65) - 501033001 (TX66) - 4401001 (TX67) - 5124001 (TX68)

TX68 COMBINE - BASE UNIT

08.10A(01) HYDROSTATIC PUMP

ссылка	Номер детали	Кол-во	Описание
	84036318	1	PUMP, SMALL, , INCL. FIGS 8.10A AND 8.10B
1	84019068	1	KIT, SEALS,
2	84041315	1	BRAKE SERVO, (3,4)
3	84041983	1	GASKET,
4	84041360	1	ELECTROMAGNET,
5	9813069	3	FILTER,
6	84041314	1	SHAFT,
7	84042088	1	GUIDE,
8	84041312	1	NUT, M30
9	84038332	1	JOINT, UNIVERSAL,
10	84042107	1	BEARING ASSY,
11	84042108	1	RING,
12	84042102	2	SERVO STEERING CYL.,
13	9813096	2	PIN,
14	165179	2	PIN,
15	84042098	1	SHAFT,
16	84042101	1	GUIDE,
17	84042109	1	LEVER,
18	84042089	1	PIN,
19	140013	1	WASHER, M4,
20	84042091	1	PIN,
21	84042090	1	CLIP,
22	84042083	1	BEARING ASSY,
23	84042086	1	LEVER,
24	84042092	1	SPRING,
25	84042087	1	SUPPORT,
26	84042096	2	WASHER,
27	84042097	2	SPRING,
28	84042095	2	RETAINER,
29	84042094	1	LEVER,
30	84042093	1	COVER,

ONLY VALID FROM 481033001 (TX62) - 461033001 (TX63) - 491033001 (TX64) - 661033001 (TX65) - 501033001 (TX66) - 4401001 (TX67) - 5124001 (TX68)

08.10B(01) HYDROSTATIC PUMP

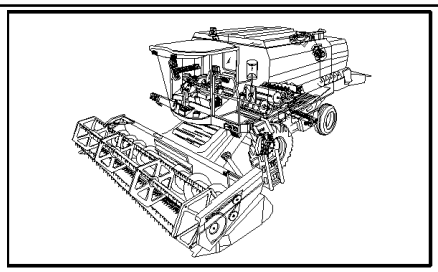

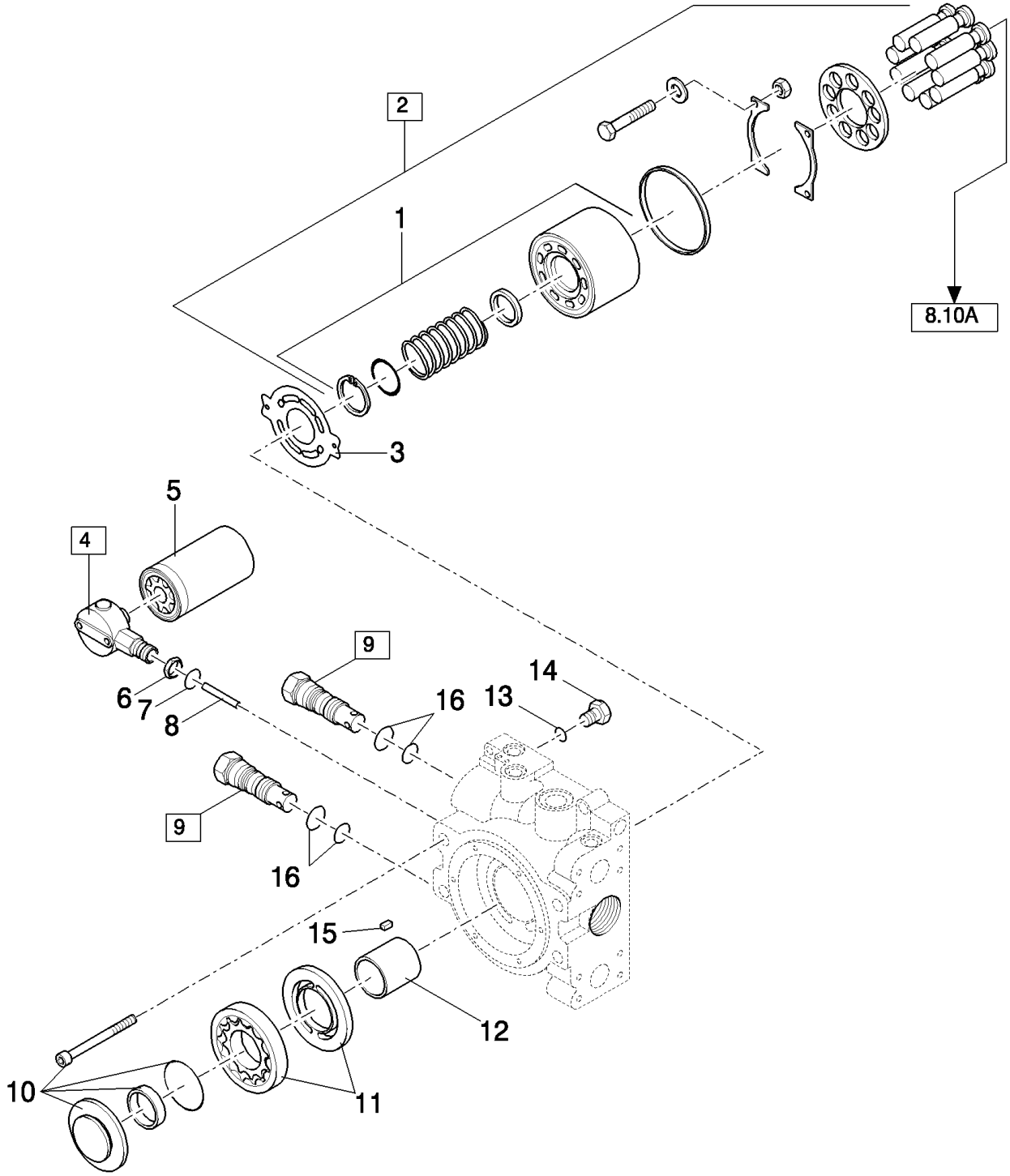

ONLY VALID FROM 481033001 (TX62) - 461033001 (TX63) - 491033001 (TX64) - 661033001 (TX65) - 501033001 (TX66) - 4401001 (TX67) - 5124001 (TX68)

TX68 COMBINE - BASE UNIT

08.10B(01) HYDROSTATIC PUMP

ссылка	Номер детали	Кол-во	Описание
1	84042084	1	KIT,
2	84042127	1	KIT, (1)
3	84042085	1	PLATE, COVER,
4	84041316	1	FILTER, (5 to 8)
5	84031880	1	FILTER, ELEMENT,
6	84037209	1	NUT,
7	84037207	1	O-RING,
8	84041317	1	TUBE, RIGID,
9	84019070	2	VALVE, HYDRAULIC, (16)
10	84042106	1	KIT,
11	84042103	1	KIT,
12	84042104	1	SHAFT,
13	165202	2	O-RING, 4-1, 90 Duro, .351" ID x .072" Thk,
14	9813059	2	VALVE, HYDRAULIC,
15	84042105	1	SPRING, Key
16	84068523	1	O-RING, DIA.:37MM
16	84068524	1	O-RING, DIA.:30MM

ONLY VALID FROM 481033001 (TX62) - 461033001 (TX63) - 491033001 (TX64) - 661033001 (TX65) - 501033001 (TX66) - 4401001 (TX67) - 5124001 (TX68)

08.11(01) HYDROSTATIC LINES

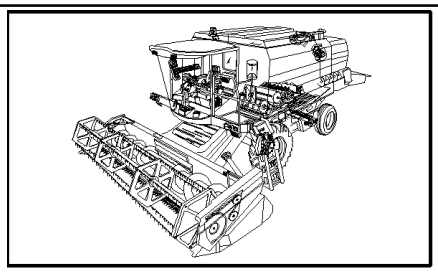

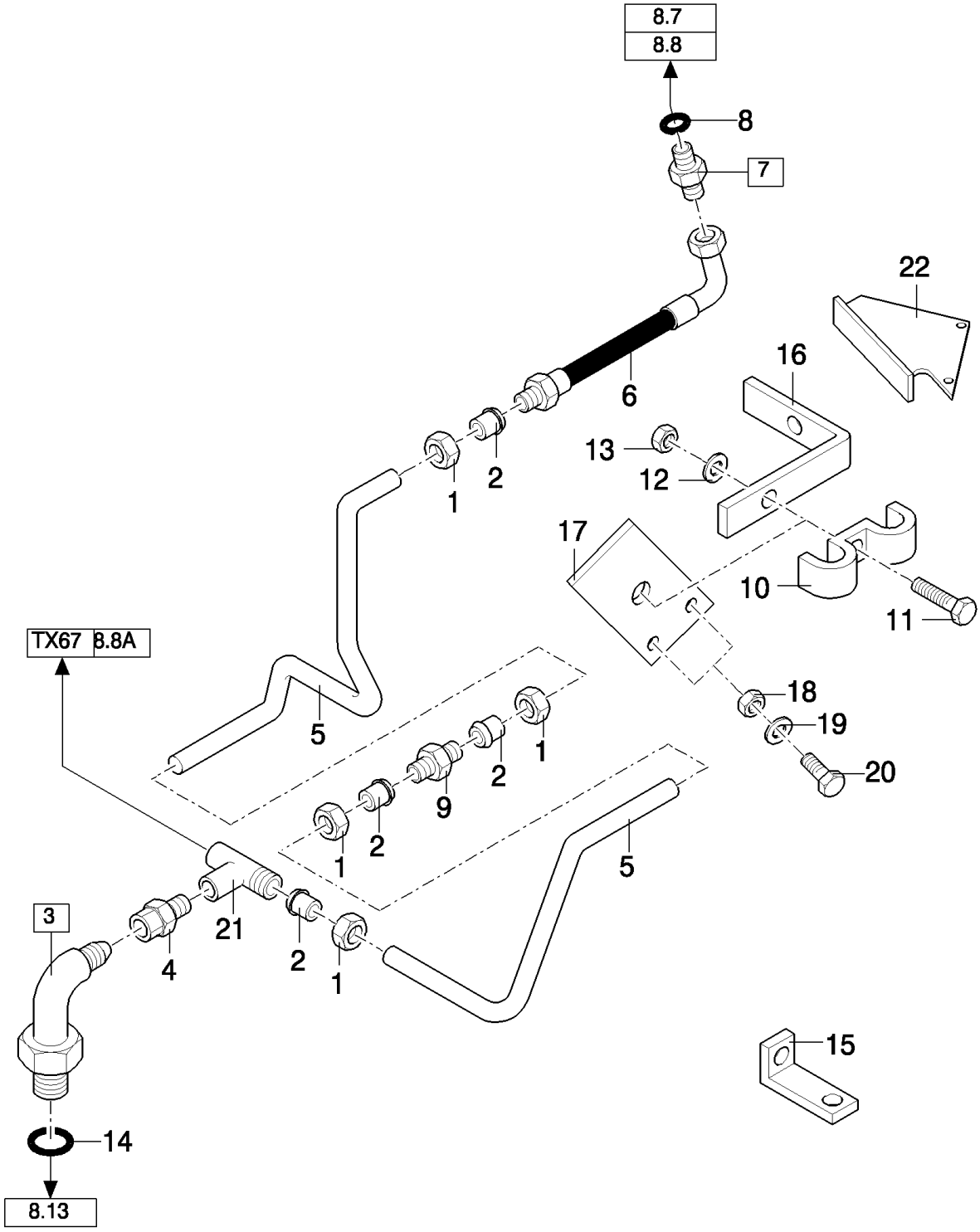

TX68 COMBINE - BASE UNIT

08.11(01) HYDROSTATIC LINES

ссылка	Номер детали	Кол-во	Описание
1	412527	AR	NUT,
2	412528	AR	FERRULE,
3	636769	1	ELBOW, (4,14), -C6405
3	84037777	1	ELBOW, (14), D6405-
4	751112	1	CONNECTOR, HYD., , -C6405
5	9811333	AR	TUBE, RIGID, DIA.:28MM,L:2M
6	9511912	1	HOSE, HYDRAULIC,
7	9511910	1	CONNECTOR, HYD., (8), FOR TX62-64-65-66 ONLY, -C1032
7	9818287	1	CONNECTOR, HYD., (8), D1030-
8	167266	1	O-RING, 12-1, 90 Duro, .924 ID x .116" Thk, , FOR TX62-64-65-66 ONLY, -C1032
8	167268	1	O-RING, 16-1, 90 Duro, 1.171" ID x .116" Thk, , D1030-
9	457545	1	CONNECTOR, HYD.,
10	435124	2	CLAMP, , FOR TX62-64-65-66 ONLY, -C1032
10	9837585	2	CLAMP, , D1030-
11	300382	2	BOLT, Hex, M8 x 60, 8.8, Full Thd, M8x60
12	322358	2	WASHER, SPRING, Belleville, M8,
13	9706690	2	NUT, M8, Cl 8,
14	167266	1	O-RING, 12-1, 90 Duro, .924 ID x .116" Thk,
15	417043	1	SUPPORT,
16	84000232	1	BRACKET, , FOR TX66-68 ONLY, -C1032
16	84014496	1	BRACKET, , FOR TX62-64-65 ONLY, -C1032
16	84039148	1	BRACKET, , D1030-
17	9837234	1	SUPPORT, , FOR TX66-68 ONLY, -C1032
17	84014495	1	SUPPORT, , FOR TX62-64-65 ONLY, -C1032
17	84041618	1	SUPPORT, , D1030-
18	15896221	2	NUT, M6, Cl 10,
19	322357	2	WASHER, SPRING, Belleville, M6,
20	120100	2	BOLT, Hex, M6 x 20, 8.8,
21	84041626	1	CONNECTION, 3 WAY, , FOR TX67 ONLY
21	457573	1	ELBOW, , FOR TX62-63-64-65-66-68 ONLY
22	84022979	1	BRACKET, , FOR TX62-63-64-65-66-67 ONLY

08.12(01) HYDROSTATIC MOTOR

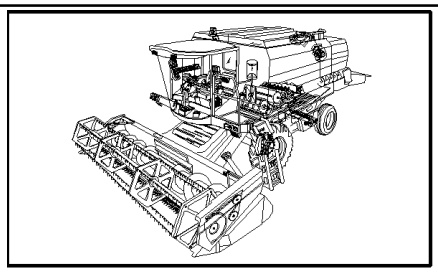

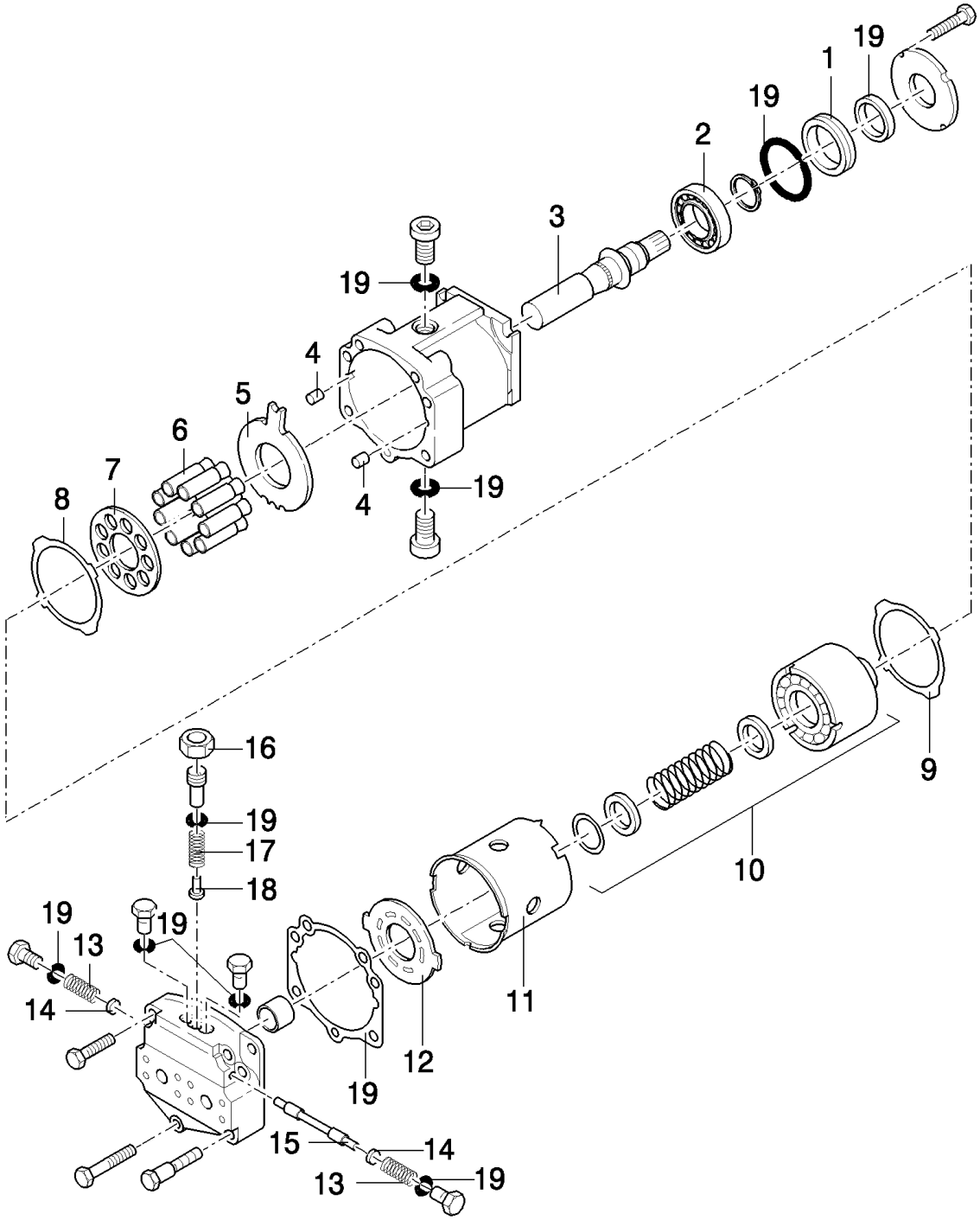

ONLY VALID UNTIL 4816999 (TX62) - 4916999 (TX64) - 6616999 (TX65) - 5023999 (TX66) - 5123999 (TX68)

TX68 COMBINE - BASE UNIT

08.12(01) HYDROSTATIC MOTOR

ссылка	Номер детали	Кол-во	Описание
	9508952	1	MOTOR, HYDRAULIC, (1 to 19)
1	9811985	1	RING,
2	9813010	1	BEARING ASSY,
3	9813011	1	SHAFT,
4	165179	2	PIN,
5	84042002	1	PLATE, THRUST,
6	9832432	9	PISTON,
7	84032403	1	RETAINER,
8	9813015	1	SHIM,
9	9813016	1	SHIM,
10	9813017	1	KIT,
11	84032404	1	COVER,
12	9813019	1	PLATE, COVER,
13	9832434	2	SPRING,
14	9832435	2	RING,
15	9832436	1	VALVE, HYDRAULIC,
16	9813024	1	NUT,
17	9813025	1	SPRING,
18	9813026	1	BEARING, CONE,
19	9813027	1	KIT, SEALS, , CONTAINS ALL PARTS INDICATED WITH REF.19

ONLY VALID UNTIL 4816999 (TX62) - 4916999 (TX64) - 6616999 (TX65) - 5023999 (TX66) - 5123999 (TX68)

08.13(01) HYDROSTATIC MOTOR

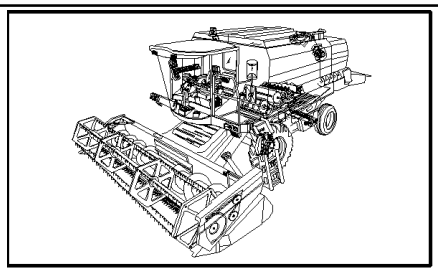

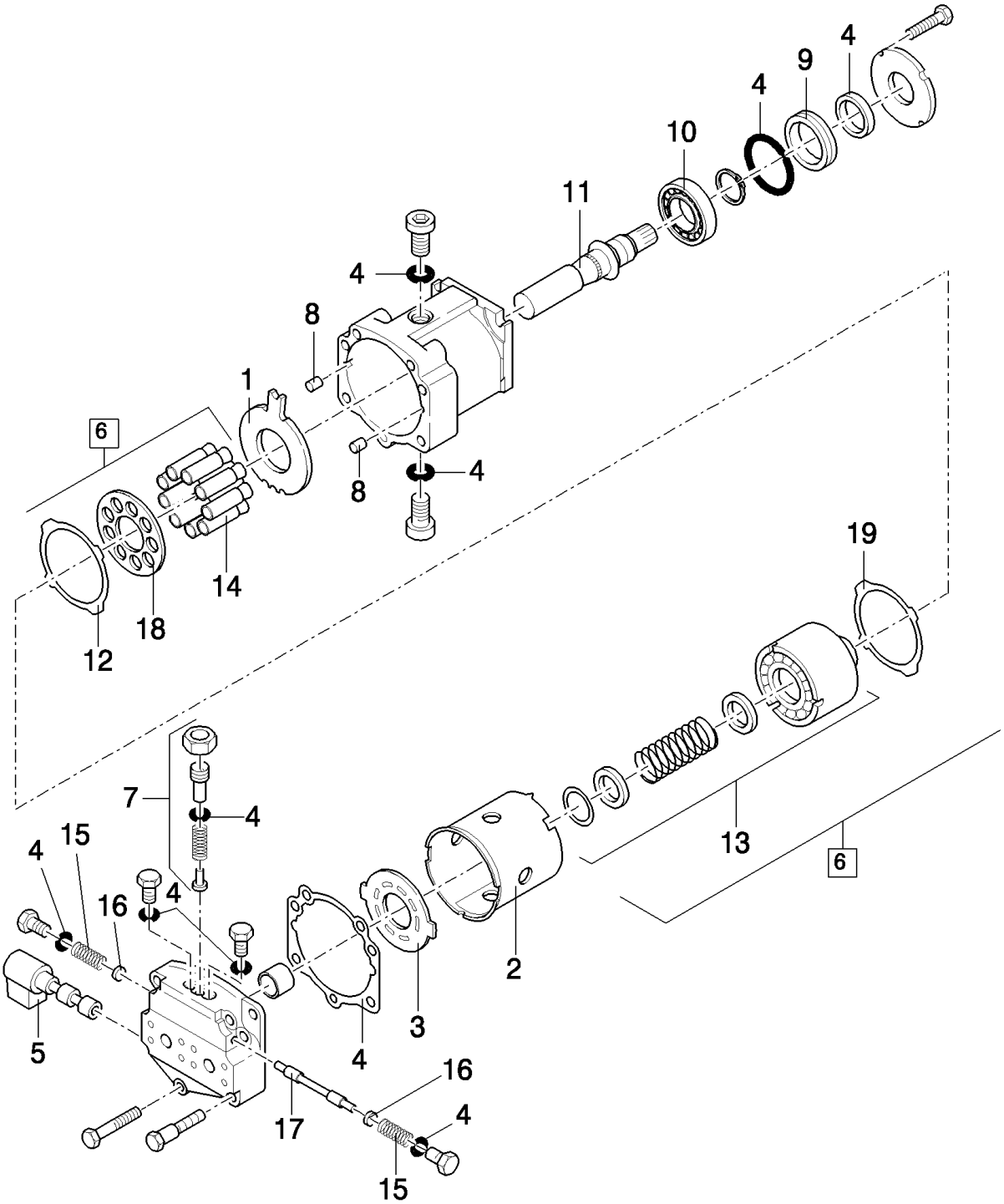

ONLY VALID FROM 4817001 (TX62) - 461033001 (TX63) - 4917001 (TX64) - 6617001 (TX65) - 5024001 (TX66) - 4404001 (TX67) - 5124001 (TX68)

TX68 COMBINE - BASE UNIT

08.13(01) HYDROSTATIC MOTOR

ссылка	Номер детали	Кол-во	Описание
	84032254	1	MOTOR, HYDRAULIC,
1	84042002	1	PLATE, THRUST,
2	84032404	1	COVER,
3	9813019	1	PLATE, COVER,
4	9813027	1	KIT, SEALS, , CONTAINS ALL PARTS INDICATED WITH REF.4
5	84041310	1	VALVE, HYDRAULIC,
6	84041311	1	KIT, (12 to 14,18,19)
7	84042152	1	VALVE, HYDRAULIC,
8	165179	2	PIN,
9	9811985	1	RING,
10	9813010	1	BEARING ASSY,
11	9813011	1	SHAFT,
12	9813015	1	SHIM,
13	9813017	1	KIT,
14	9832432	9	PISTON,
15	9832434	2	SPRING,
16	9832435	2	RING,
17	9832436	1	VALVE, HYDRAULIC,
18	84032403	1	RETAINER,
19	9813016	1	SHIM,

ONLY VALID FROM 4817001 (TX62) - 461033001 (TX63) - 4917001 (TX64) - 6617001 (TX65) - 5024001 (TX66) - 4404001 (TX67) - 5124001 (TX68)

08.14(01) HYDRAULICS FOR NH675 AND IVECO ENGINE

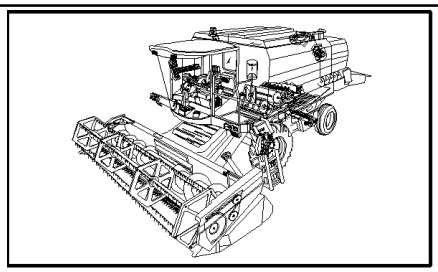

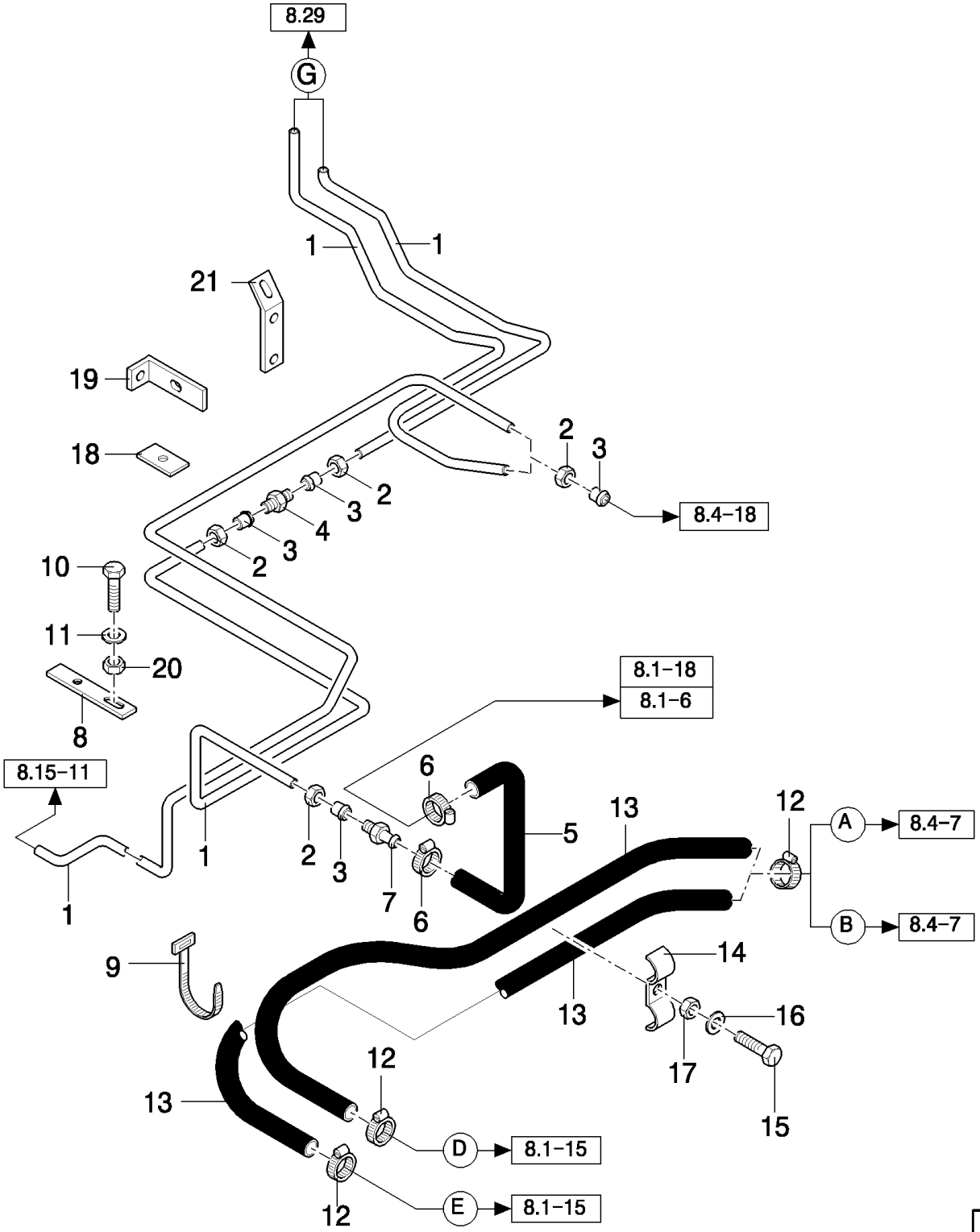

TX68 COMBINE - BASE UNIT

08.14(01) HYDRAULICS FOR NH675 AND IVECO ENGINE

ссылка	Номер детали	Кол-во	Описание
1	371536	AR	TUBE, RIGID, DIA.:16MM,L:2M
2	335171	AR	NUT,
3	335169	AR	FERRULE,
4	335174	1	CONNECTOR, HYD.,
5	451556	1	HOSE,
6	326082	2	CLAMP,
7	84000318	1	CONNECTOR, HYD.,
8	84000903	1	BRACKET, , FOR TX62-64-65-66-68 ONLY
8	84041990	1	BRACKET, , NOT FOR TX68PLUS, FOR TX63-67-68 ONLY
8	84058459	1	BRACKET, , FOR TX68PLUS ONLY
9	396718	3	STRAP,
10	120100	1	BOLT, Hex, M6 x 20, 8.8,
11	322357	1	WASHER, SPRING, Belleville, M6,
12	382527	4	CLAMP, HOSE,
13	9511505	2	HOSE, , FOR TX68PLUS ONLY
13	9511505	2	HOSE, , NOT FOR TX68PLUS, FOR TX68 ONLY, -C1076
13	84000208	2	HOSE, FLEXIBLE, , FOR TX68 ONLY, NOT FOR TX68PLUS, D1077-
13	84000208	2	HOSE, FLEXIBLE, , FOR TX62-63-64-65-66-67 ONLY
14	754513	1	CLAMP,
15	120104	1	SCREW, Hex, M8 x 20, 8.8,
16	322358	1	WASHER, SPRING, Belleville, M8,
17	9706690	1	NUT, M8, Cl 8,
18	434103	3	PLATE,
19	84007094	1	SUPPORT, , FOR TX68 ONLY
20	15896221	1	NUT, M6, Cl 10,
21	84014832	1	BRACKET, , FOR TX62-64-65-66 ONLY

08.15(01) HYDRAULIC LINES TO MAIN VALVE AND HEADER CYLINDERS - WITH COMPENSATION

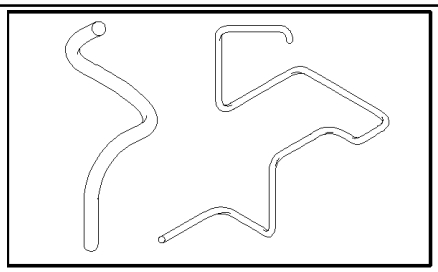

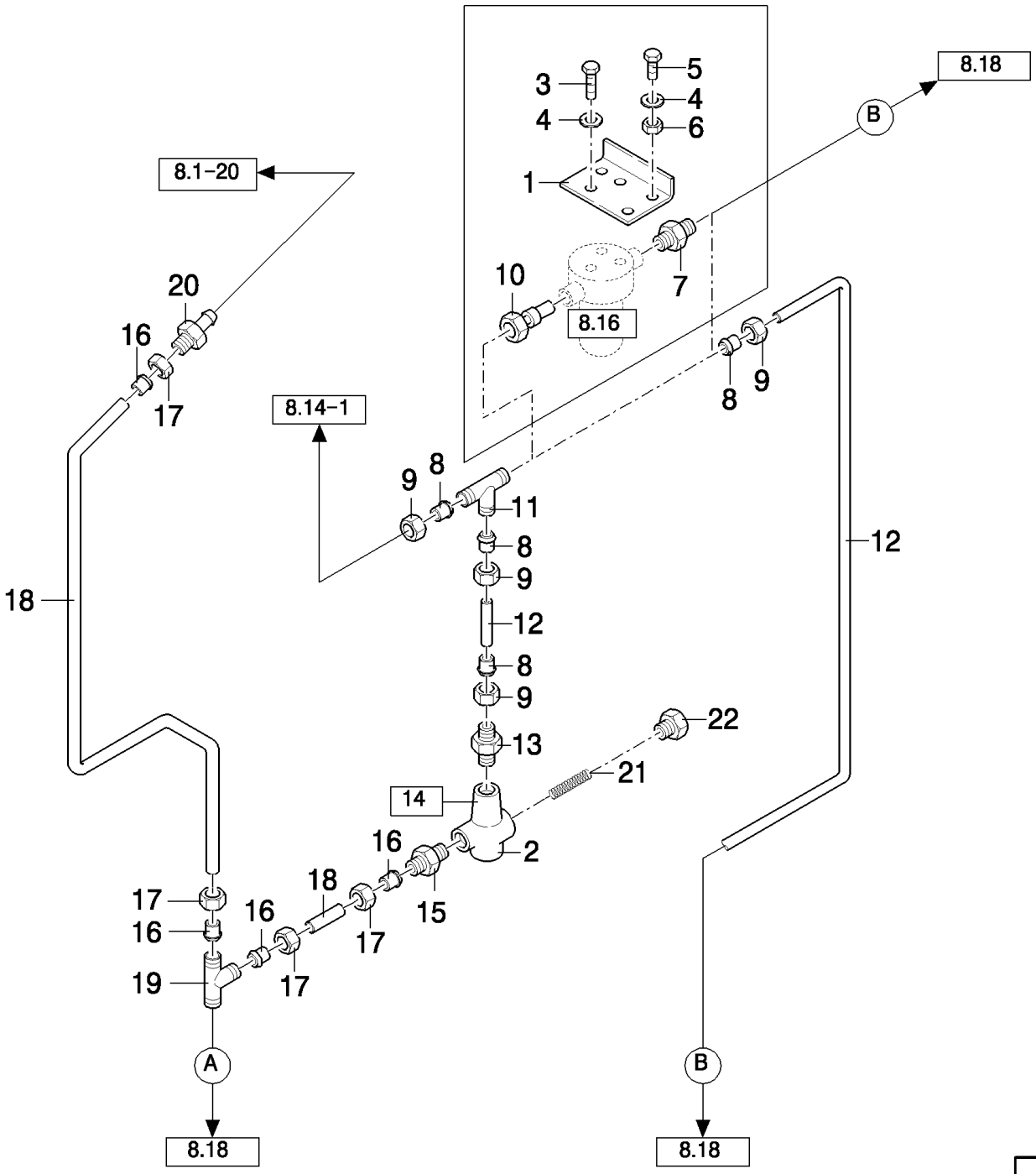

TX68 COMBINE - BASE UNIT

08.15(01) HYDRAULIC LINES TO MAIN VALVE AND HEADER CYLINDERS - WITH COMPENSATION

ссылка	Номер детали	Кол-во	Описание
1	84005430	1	SUPPORT,
2	84011927	1	KIT, SEALS,
2	84818233	1	SPRING,
3	80300380	3	SCREW, M6x16
4	322358	5	WASHER, SPRING, Belleville, M8,
5	43127	2	BOLT, Hex, M8 x 25, 8.8,
6	9706690	2	NUT, M8, Cl 8,
7	9850809	1	CONNECTOR, HYD.,
8	335169	AR	FERRULE,
9	335171	AR	NUT,
10	84005388	1	CONNECTOR, HYD.,
11	444325	1	CONNECTION, 3 WAY,
12	371536	AR	TUBE, RIGID, DIA.:16MM,L:2M
13	394372	1	CONNECTOR, HYD.,
14	9513728	1	VALVE, PRESSURE RELIEF, (2,21,22), -C1253
14	84818232	1	VALVE, HYDRAULIC, (2), D1254-
15	394373	1	CONNECTOR, HYD.,
16	335168	AR	FERRULE,
17	335170	AR	NUT,
18	371534	AR	TUBE, RIGID, DIA.:18MM,L:2M
19	379431	1	CONNECTION, 3 WAY,
20	449161	1	CONNECTOR, HYD.,
21	9813875	2	SPRING,
22	417006	1	PLUG,

08.16(01) HIGH PRESSURE FILTER

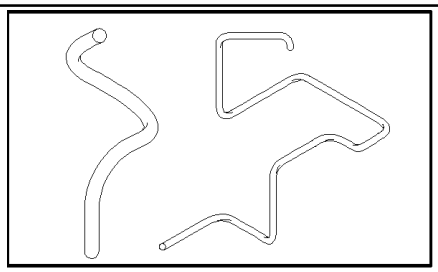

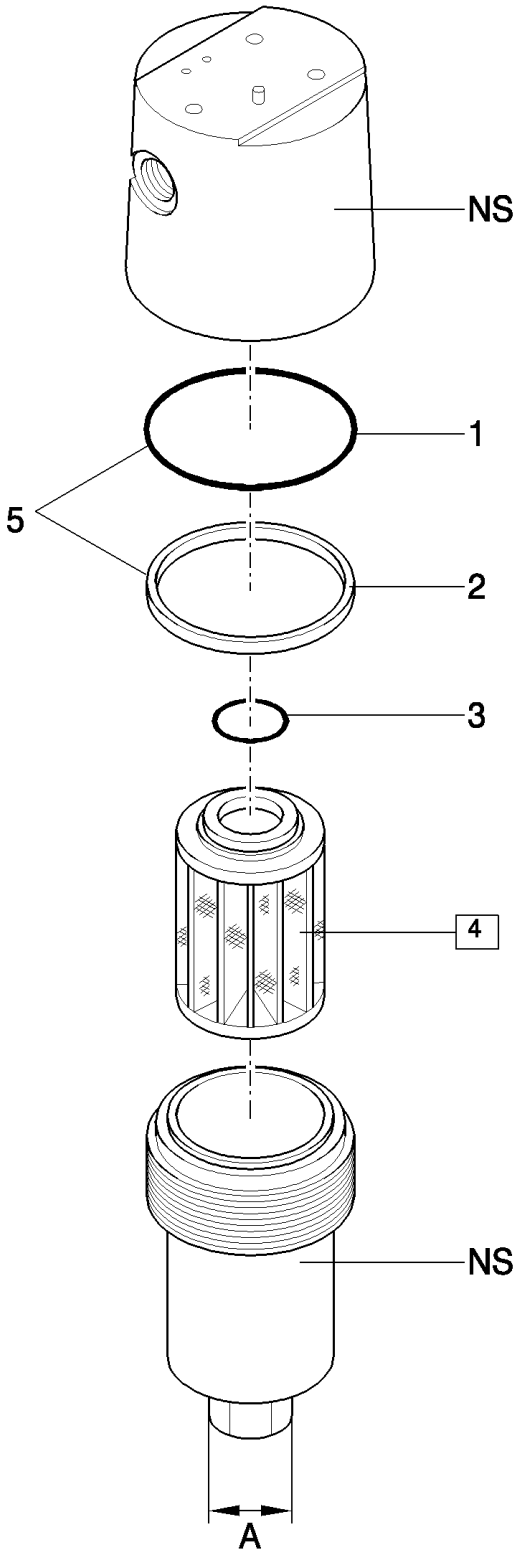

TX68 COMBINE - BASE UNIT

08.16(01) HIGH PRESSURE FILTER

ссылка	Номер детали	Кол-во	Описание
	84000128	1	FILTER, HYDRAULIC OIL, (1 to 4)
1	84032330	1	O-RING, , A=34, -C0000
2	84032329	1	RING, , A=34, -C0000
3	84032331	1	ELEMENT, SEALING,
4	84004451	1	FILTER, ELEMENT, (3) DIA=56MM L=102MM
4	84444543	1	FILTER, ELEMENT, DIA=50MM L=112MM
5	84814697	1	KIT, SEALS, , A=24, D0000-

08.18(01) HYDRAULIC LINES TO MAIN VALVE AND HEADER CYLINDERS, WITH COMPENSATION

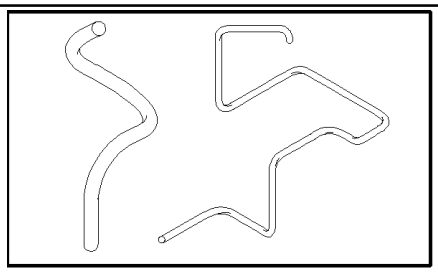

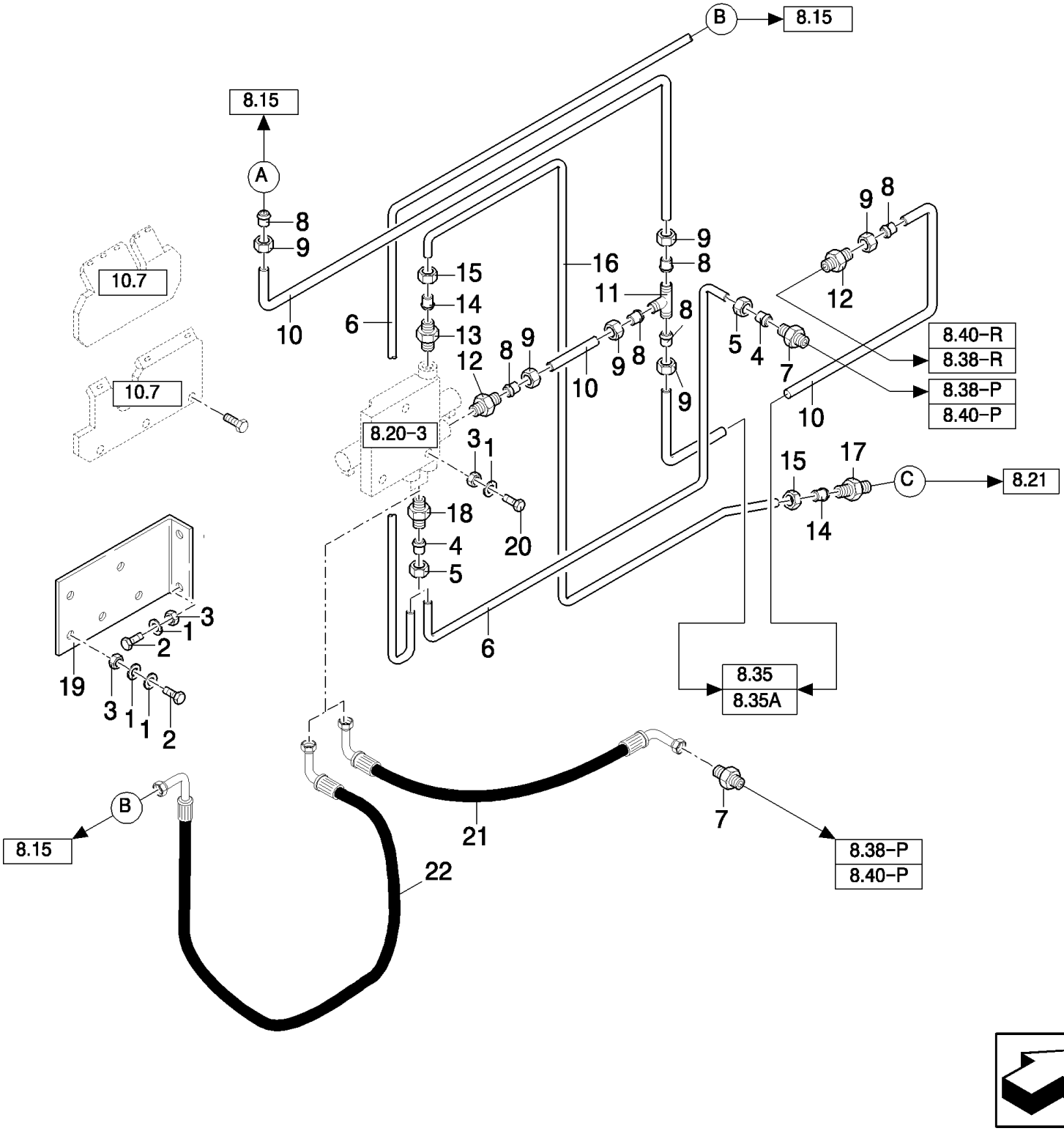

TX68 COMBINE - BASE UNIT

08.18(01) HYDRAULIC LINES TO MAIN VALVE AND HEADER CYLINDERS, WITH COMPENSATION

ссылка	Номер детали	Кол-во	Описание
1	322358	9	WASHER, SPRING, Belleville, M8,
2	43127	7	BOLT, Hex, M8 x 25, 8.8,
3	9706690	7	NUT, M8, Cl 8,
4	335169	AR	FERRULE,
5	335171	AR	NUT,
6	371536	AR	TUBE, RIGID, DIA.:16MM,L:2M
7	394372	1	CONNECTOR, HYD.,
8	335168	AR	FERRULE,
9	335170	AR	NUT,
10	371534	AR	TUBE, RIGID, DIA.:18MM,L:2M
11	379431	1	CONNECTION, 3 WAY,
12	9501819	2	CONNECTOR, HYD.,
13	9516261	1	CONNECTOR, HYD.,
14	150015	AR	FERRULE,
15	86548976	AR	NUT,
16	9513719	AR	TUBE, RIGID, DIA.:12MM,L:2M
17	150018	1	CONNECTOR, HYD.,
18	9516263	2	CONNECTOR, HYD.,
19	9814129	1	SUPPORT,
20	43133	3	SCREW, Hex, M8 x 80, 8.8,
21	84429190	1	HOSE, FLEXIBLE,
21	84400019	1	HOSE, , FOR USE BEFORE --1033001 (2000-021)
22	84429189	1	HOSE, FLEXIBLE,
22	84400018	1	HOSE, , FOR USE BEFORE --1033001 (2000-021)

08.20(01) COMPENSATION VALVE AND E.M.R. VALVE, WITH COMPENSATION

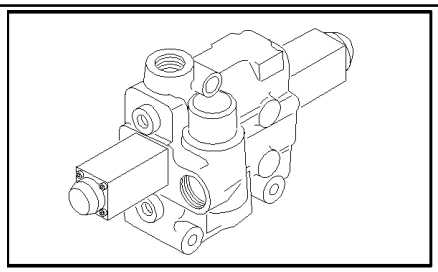

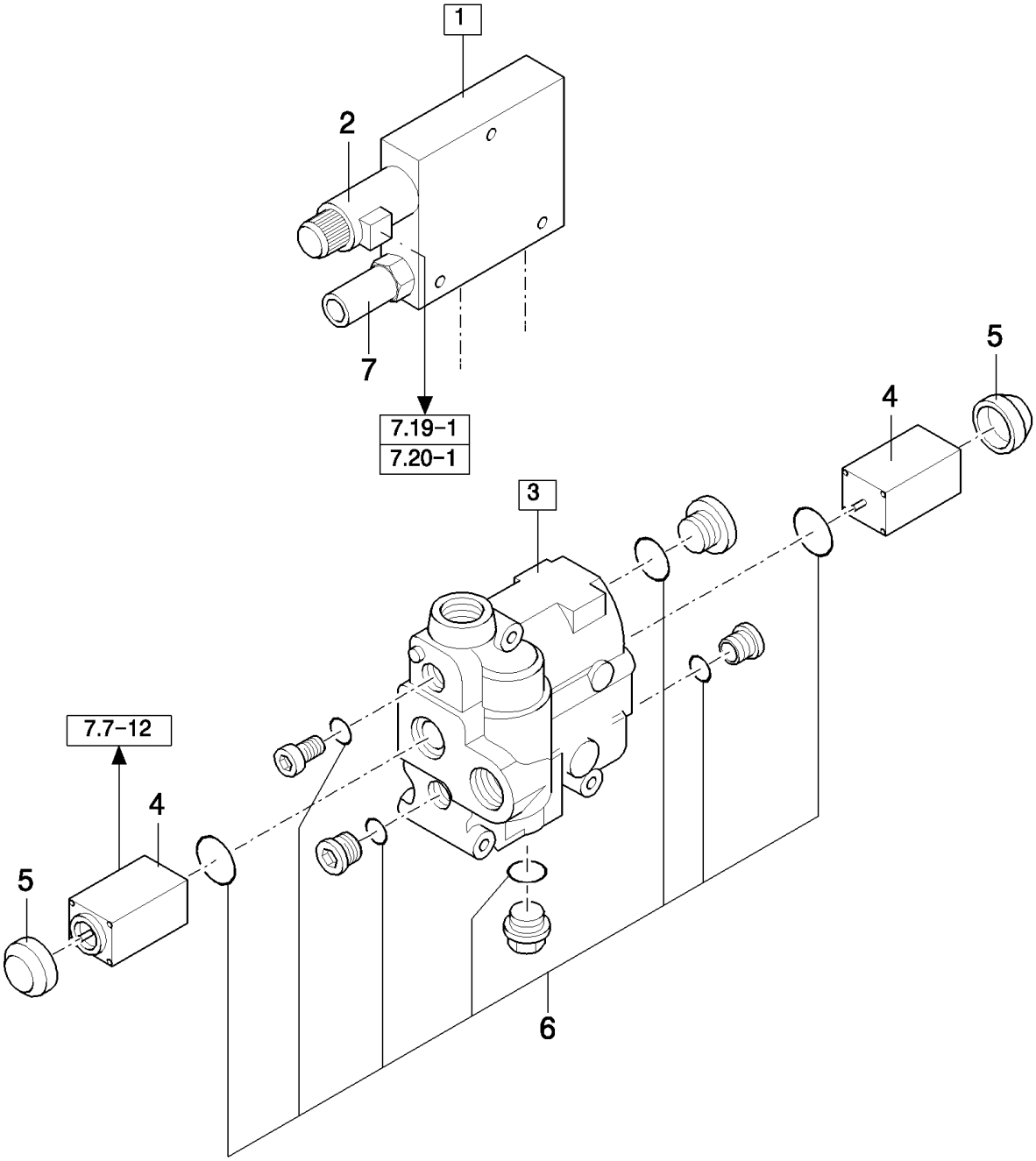

TX68 COMBINE - BASE UNIT

08.20(01) COMPENSATION VALVE AND E.M.R. VALVE, WITH COMPENSATION

ссылка	Номер детали	Кол-во	Описание
1	9831828	1	VALVE, HYDRAULIC, (2,7), -C1241
1	84097019	1	VALVE, HYDRAULIC, (2,7), D1242-
2	9831827	1	ELECTROMAGNET,
3	9513729	1	VALVE, HYDRAULIC, E.M.R. (4 to 6), -C1032
3	84818230	1	VALVE, HYDRAULIC, E.M.R. (4), D1033-
4	84004402	2	ELECTROMAGNET, PROP, -C1032
4	84062114	2	ELECTROMAGNET, PROP, D1033-
5	84014430	1	PROTECTION CAP,
6	84014429	1	KIT, SEALS,
7	84817017	1	SENSOR,

08.21(01) HYDRAULIC PARTS FOR HEADER

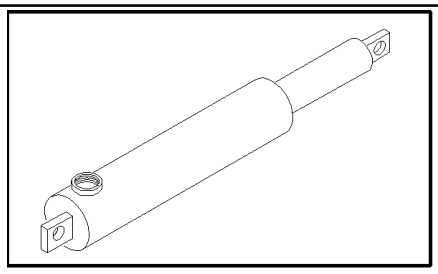

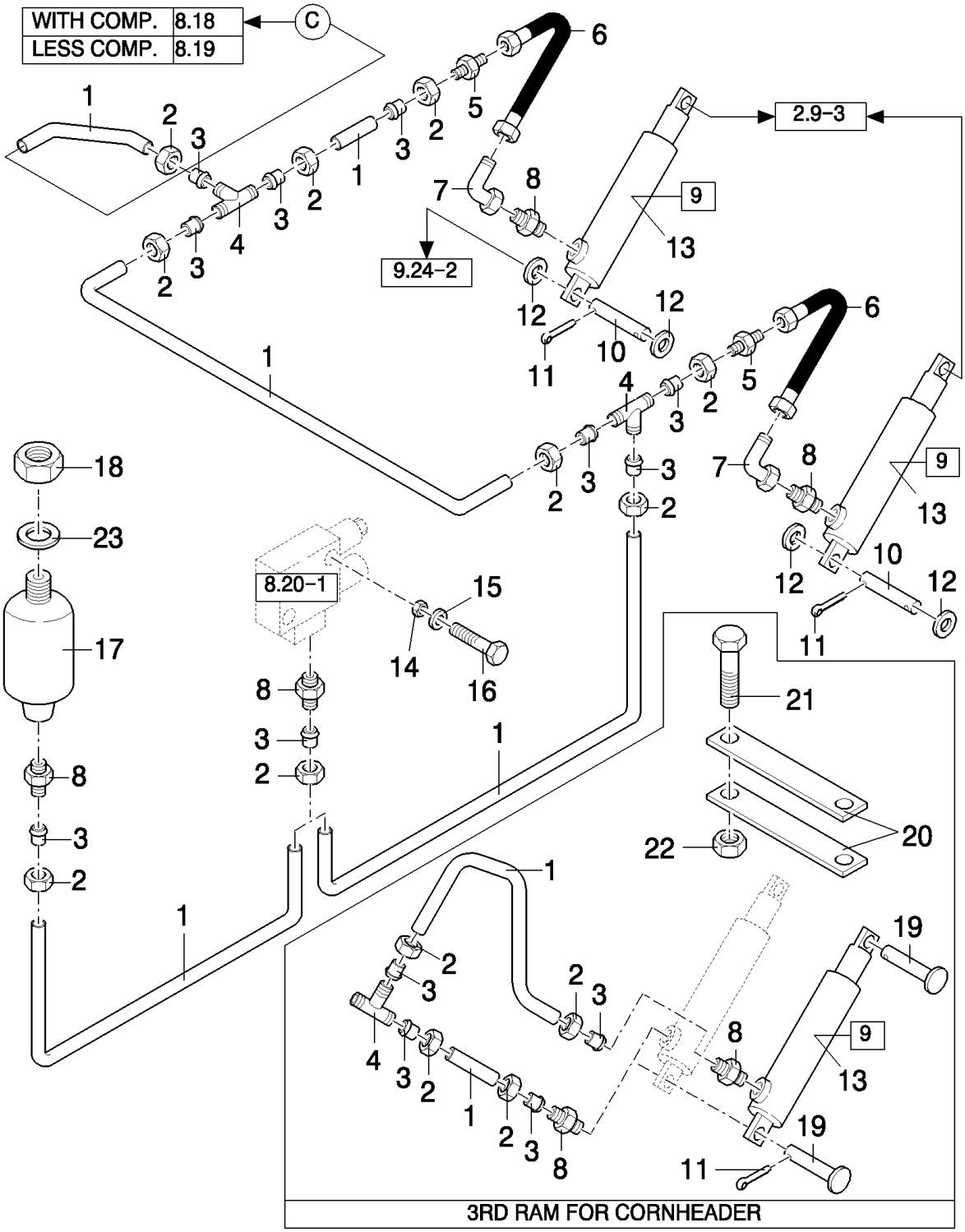

TX68 COMBINE - BASE UNIT

08.21(01) HYDRAULIC PARTS FOR HEADER

ссылка	Номер детали	Кол-во	Описание
1	9513719	AR	TUBE, RIGID, DIA.:12MM,L:2M
2	86548976	AR	NUT,
3	150015	AR	FERRULE,
4	150019	2	CONNECTION, 3 WAY,
5	150018	2	CONNECTOR, HYD.,
6	9833953	2	HOSE,
7	9508529	3	ELBOW,
8	395782	6	CONNECTOR, HYD.,
9	84026605	3	HYDRAULIC CYLINDER, (13), -C1090
9	84064527	3	HYDRAULIC CYLINDER, (13), D1091-
10	9835289	2	PIN,
11	89515820	6	PIN, SPLIT (COTTER),
12	140103	4	WASHER,
13	9514613	3	KIT, SEALS, , -C1090
13	84036626	3	KIT, SEALS, Set of 4, "P" OR "SV" ENGRAVED IN CYLINDER, -C1090
13	84807313	3	KIT, SEALS, Set of 5, "P" OR "SV" ENGRAVED IN CYLINDER, D1091-
14	15896221	2	NUT, M6, Cl 10, , FOR MACHINES WITH COMPENSATION
15	140015	2	WASHER, 6MM, FOR MACHINES WITH COMPENSATION
16	397985	2	BOLT, Hex, M6 x 70, 8.8, Full Thd, , FOR MACHINES WITH COMPENSATION
17	456520	1	ACCUMULATOR, 70 BAR, FOR MACHINES WITH COMPENSATION, -C4620
17	84018325	1	ACCUMULATOR, 70 BAR, FOR MACHINES WITH COMPENSATION, D4620-
17	9508815	1	ACCUMULATOR, 65 BAR, FOR MACHINES WITH COMPENSATION, -C1241
17	84097016	1	ACCUMULATOR, 65 BAR, FOR MACHINES WITH COMPENSATION, D1242-
17	84056637	1	ACCUMULATOR, 140 BAR, FOR MACHINES WITH COMPENSATION
18	308823	1	NUT, M28 x 1.5, Cl 8, , FOR MACHINES WITH COMPENSATION
19	9832131	2	PIN,
20	9832137	2	PLATE,
21	120074	2	BOLT, Hex, M10 x 90, 8.8,
21	86508573	2	SCREW, Hex, M10 x 110, 8.8, M10x110
22	100037	2	NUT, M10 x 1.5, Cl 8,
23	140110	1	WASHER,

08.22(01) HYDRAULIC EQUIPMENT REEL

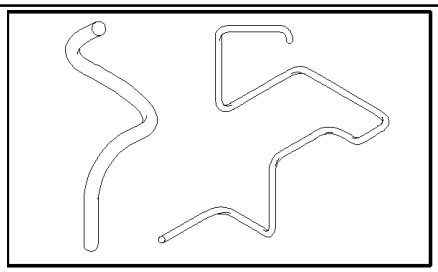

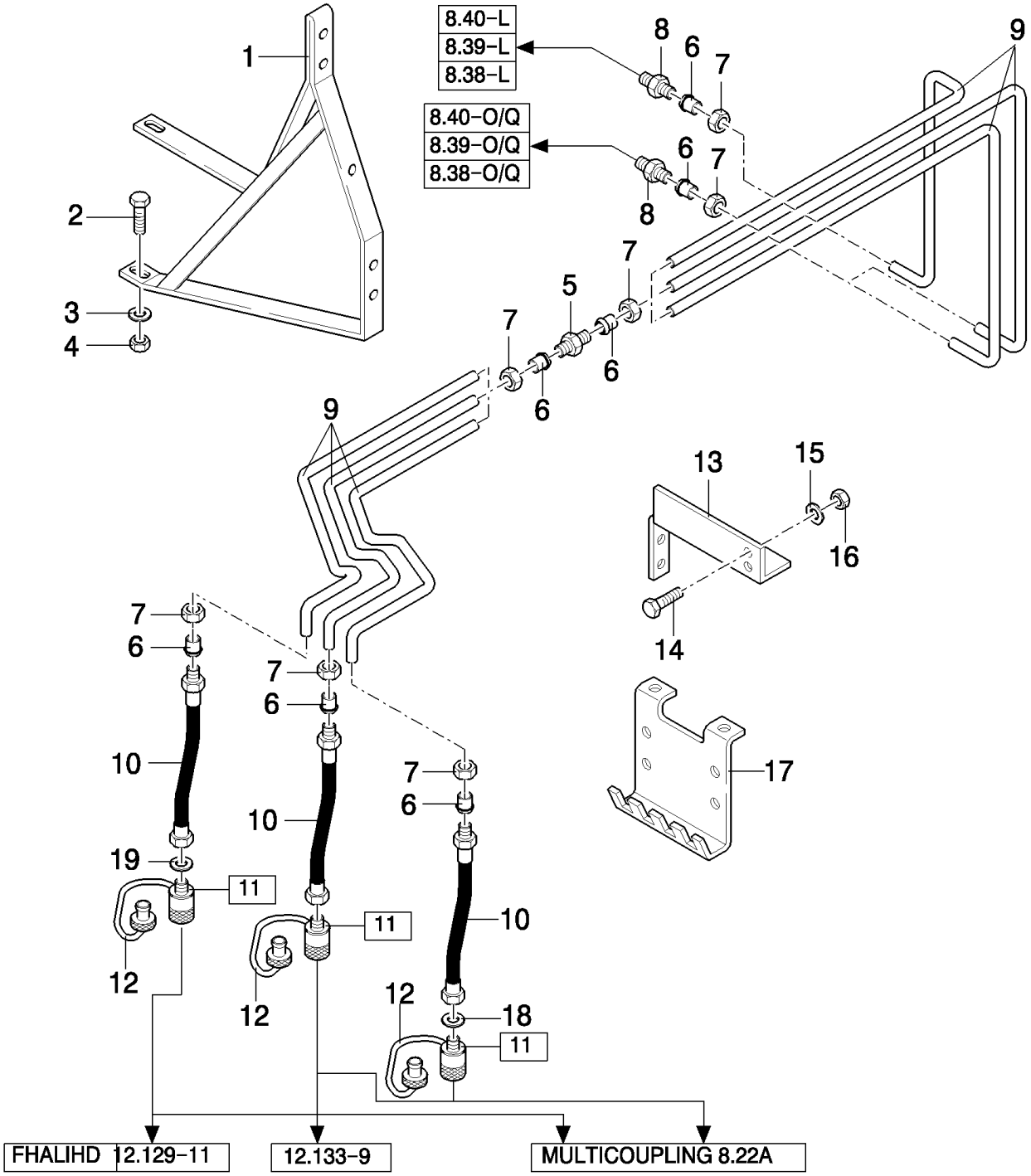

TX68 COMBINE - BASE UNIT

08.22(01) HYDRAULIC EQUIPMENT REEL

ссылка	Номер детали	Кол-во	Описание
1	9832320	1	SUPPORT, , -C4540
1	84017099	1	SUPPORT, , D4540-
2	43127	1	BOLT, Hex, M8 x 25, 8.8,
3	322358	1	WASHER, SPRING, Belleville, M8,
4	9706690	1	NUT, M8, Cl 8,
5	335172	3	CONNECTOR, HYD.,
6	335136	AR	FERRULE,
7	335135	AR	NUT,
8	386215	3	CONNECTOR, HYD.,
9	371540	AR	TUBE, RIGID, DIA.:8MM,L:2M
10	424525	3	HOSE, FLEXIBLE,
11	456012	3	COUPLING, QUICK, MALE, (12)
12	456014	3	DUST CAP,
13	9831890	1	SUPPORT,
14	120100	2	BOLT, Hex, M6 x 20, 8.8,
15	322357	2	WASHER, SPRING, Belleville, M6,
16	15896221	2	NUT, M6, Cl 10,
17	9812237	1	SUPPORT,
18	747811	1	WASHER,
19	747812	1	WASHER,

08.22A(01) MULTI-COUPLING

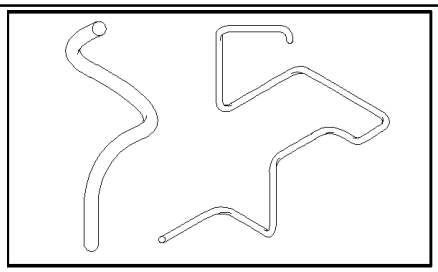

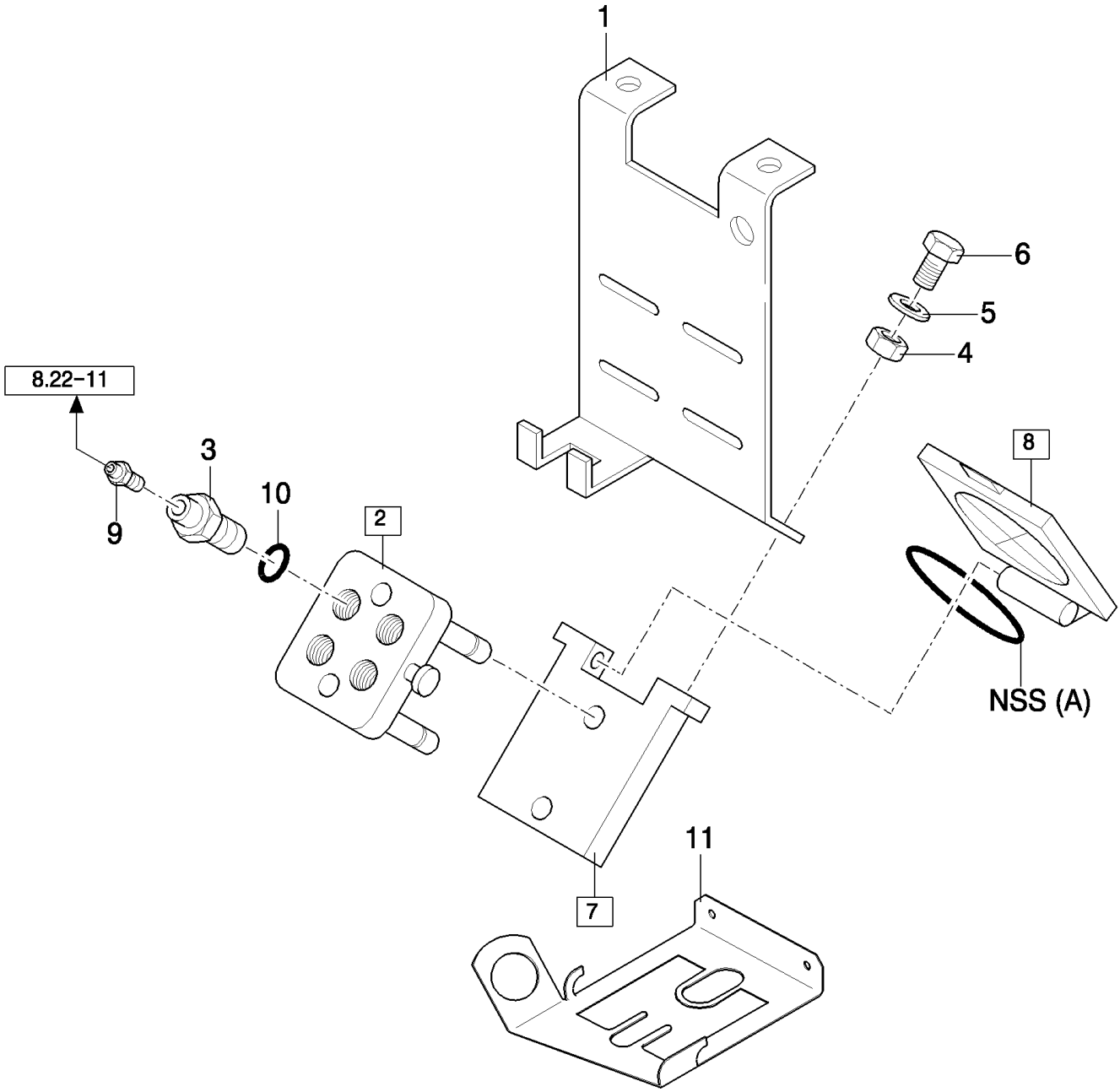

TX68 COMBINE - BASE UNIT

08.22A(01) MULTI-COUPLING

ссылка	Номер детали	Кол-во	Описание
1	84053276	1	SUPPORT, , BSN C423
1	84458508	1	SUPPORT, , ASN D424
2	84053200	1	BLOCK, CONNECTING, (3,10), -C1253
2	84435011	1	COUPLING, QUICK, MALE, (3,10), D1254-
3	84052323	3	CONNECTOR, HYD., , -C1253
3	84435504	3	CONNECTOR, HYD., , D1254-
4	9706690	2	NUT, M8, Cl 8,
5	322358	2	WASHER, SPRING, Belleville, M8,
6	120228	2	SCREW, Hex Soc Hd, M8 x 20, 8.8,
7	84041506	1	SUPPORT, (8), -C1253
7	84435012	1	COUPLING, QUICK, MALE, (8), BSN F254423
8	84052304	1	COVER, (A), -C1253
8	84435044	1	COVER, , D1254-
9	84043514	3	CONNECTOR, HYD., , -C1253
9	84077400	3	CONNECTOR, HYD., , D1254-
10	84068531	3	SEAL, , -C1253
10	86623899	3	SEAL, , D1254-
11	84459469	1	BRACKET, , ASN D424

08.23(01) HYDRAULICS FOR REVERSING SYSTEM

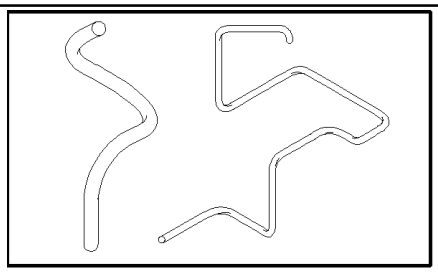

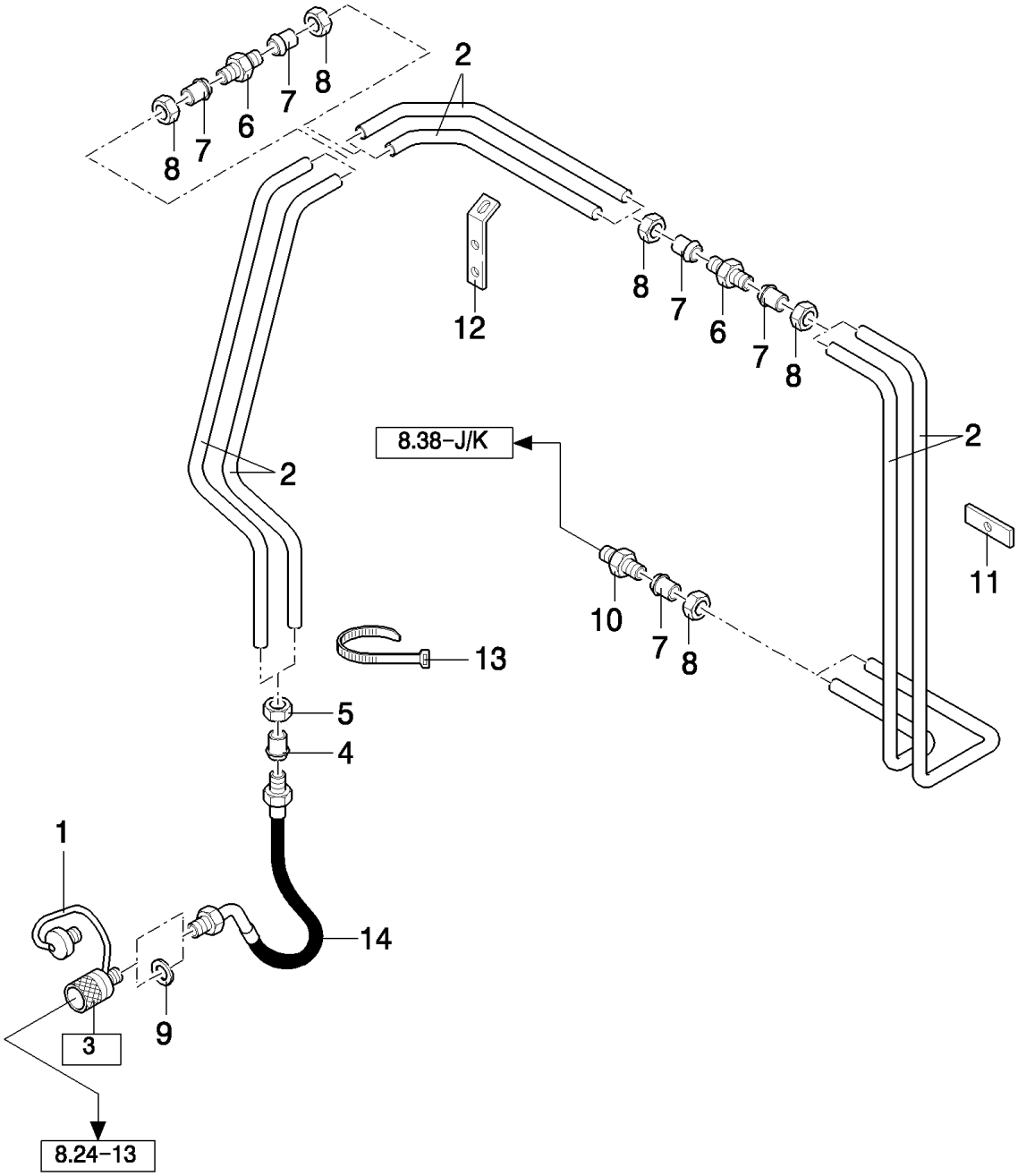

TX68 COMBINE - BASE UNIT

08.23(01) HYDRAULICS FOR REVERSING SYSTEM

ссылка	Номер детали	Кол-во	Описание
1	9508643	1	CAP,
2	371536	AR	TUBE, RIGID, DIA.:16MM,L:2M
3	457420	2	JOINT, UNIVERSAL, (1)
4	335136	AR	FERRULE,
5	335135	AR	NUT,
6	335174	4	CONNECTOR, HYD.,
7	335169	AR	FERRULE,
8	335171	AR	NUT,
9	9508599	1	WASHER,
10	394372	2	CONNECTOR, HYD.,
11	434103	2	PLATE,
12	84000888	2	BRACKET, , FOR TX66-68 ONLY, -C6405
12	84018561	2	BRACKET, , FOR TX66-67-68 ONLY, D6405-
12	84018561	2	BRACKET, , FOR TX63-64-65 ONLY
13	396718	1	STRAP,
14	9815902	2	HOSE, HYDRAULIC,

08.24(01) REVERSE MOTOR, HEADER

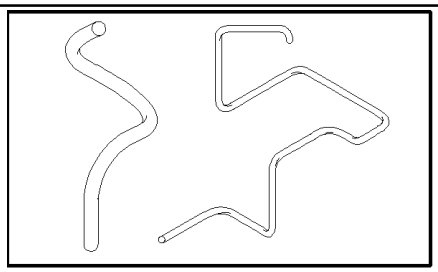

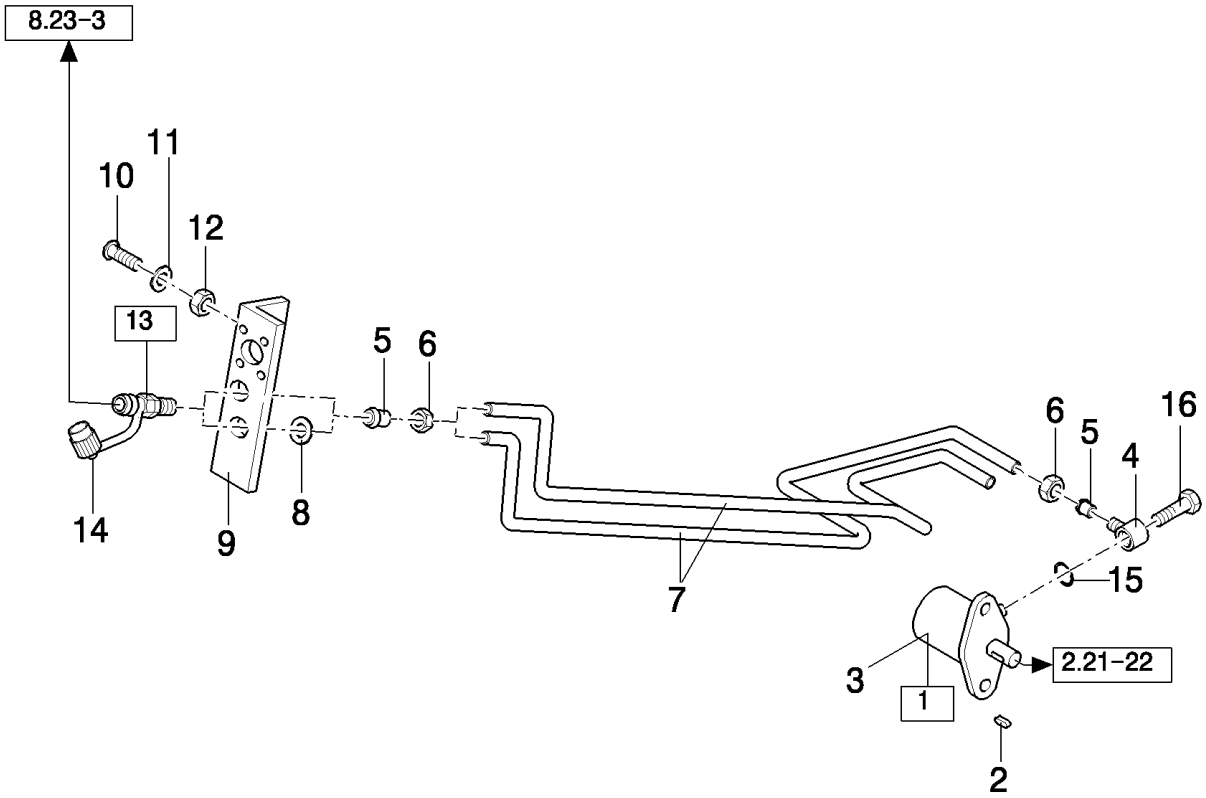

TX68 COMBINE - BASE UNIT

08.24(01) REVERSE MOTOR, HEADER

ссылка	Номер детали	Кол-во	Описание
1	9508231	1	MOTOR, HYDRAULIC, (2,3), -C6620
1	84026022	1	MOTOR, HYDRAULIC, (2,3), D6620-
2	170030	1	KEY, M8 x 7 x 32, Par,
3	9513248	1	KIT, SEALS, , -C6620
3	84062513	1	KIT, SEALS, , D6620-
3	84334111	1	KIT, SEALS, , D2005-
4	84041756	2	BOLT, BANJO,
5	335169	AR	FERRULE,
6	335171	AR	NUT,
7	371536	AR	TUBE, RIGID, DIA.:16MM,L:2M
8	9508599	1	WASHER,
9	84004077	1	SUPPORT,
10	V43471	2	BOLT, M10x20
11	140045	2	WASHER, SPRING, Belleville, M10,
12	100016	2	NUT, M10, Cl 8,
13	457449	2	JOINT, UNIVERSAL, (14)
14	9508639	2	CAP,
15	84041755	2	SEAL,
16	84041757	2	SCREW, HOLLOW,

08.25(01) ACCUMULATORS, LATERAL FLOTATION

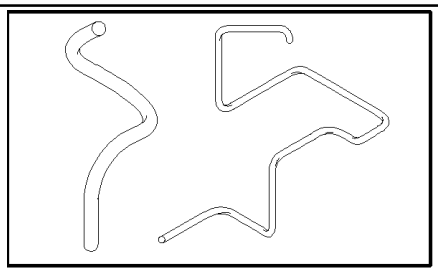

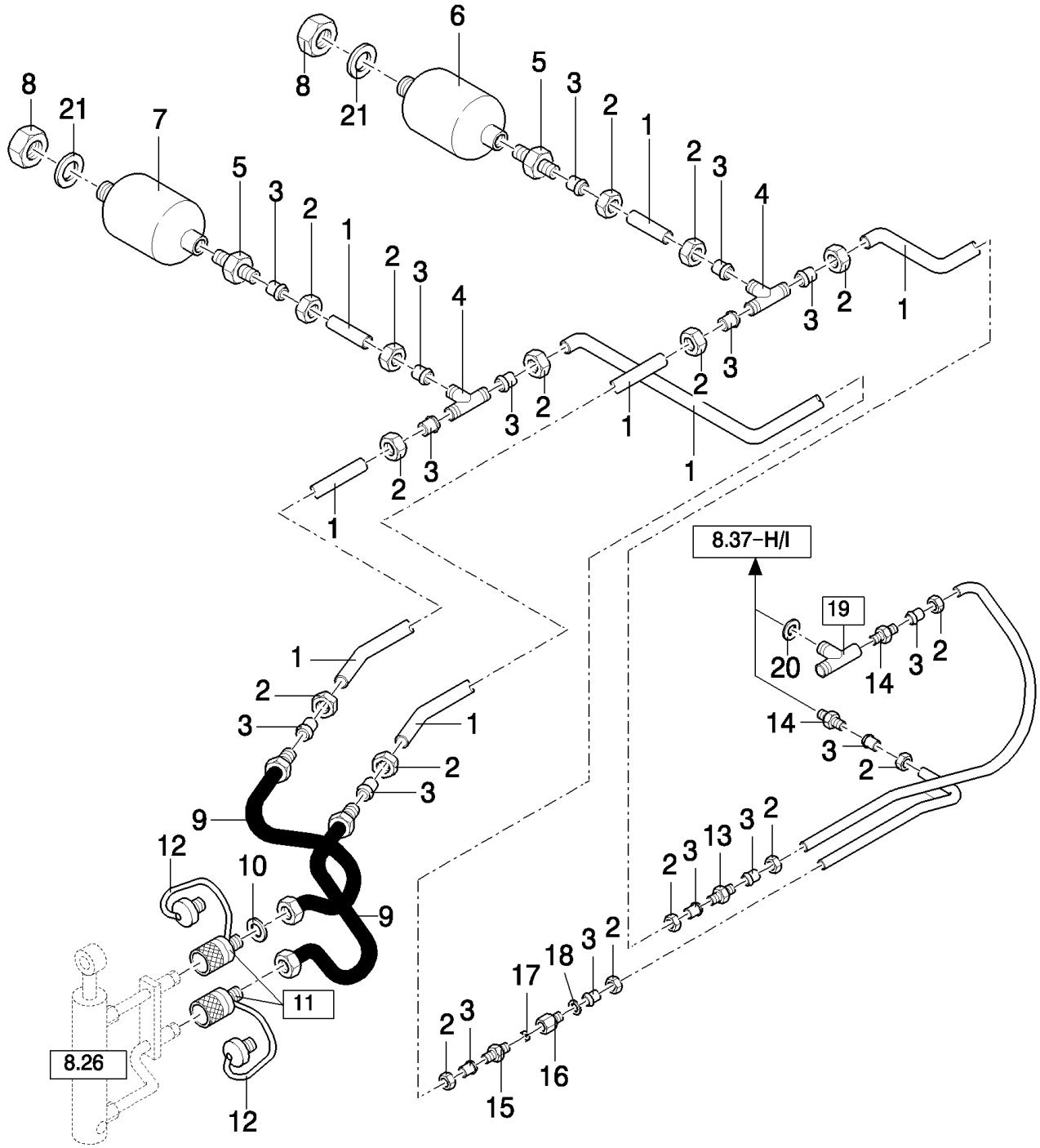

TX68 COMBINE - BASE UNIT

08.25(01) ACCUMULATORS, LATERAL FLOTATION

ссылка	Номер детали	Кол-во	Описание
1	371540	AR	TUBE, RIGID, DIA.:8MM,L:2M
2	335135	AR	NUT,
3	335136	AR	FERRULE,
4	379430	2	CONNECTION, 3 WAY,
5	386215	2	CONNECTOR, HYD.,
6	84018364	1	ACCUMULATOR, 60 BAR, -C5660
6	84017606	1	ACCUMULATOR, 85 BAR, D5660-
7	84018365	1	ACCUMULATOR, 120 BAR
8	308823	2	NUT, M28 x 1.5, Cl 8,
9	424525	2	HOSE, FLEXIBLE,
10	747812	1	WASHER,
11	456012	2	COUPLING, QUICK, MALE, (12)
12	456014	2	DUST CAP,
13	335172	1	CONNECTOR, HYD.,
14	386215	2	CONNECTOR, HYD., , -C5660
14	84023301	2	CONNECTOR, HYD., , D5660-
15	396162	1	CONNECTOR, HYD., , -C5660
16	84014644	1	CONNECTOR, HYD., , -C5660
17	410897	1	VALVE, RESTRICTOR, , -C5660
18	423996	1	ORIFICE, , -C5660
19	84023314	1	VALVE, HYDRAULIC, (20), D5660-
20	220122	1	SEAL, DIA.:18
20	220049	1	WASHER, SEALING, A14x18
21	140110	2	WASHER,

08.26(01) CYLINDER, LATERAL FLOTATION

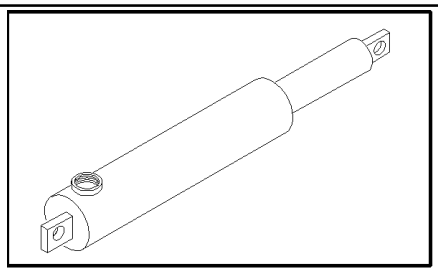

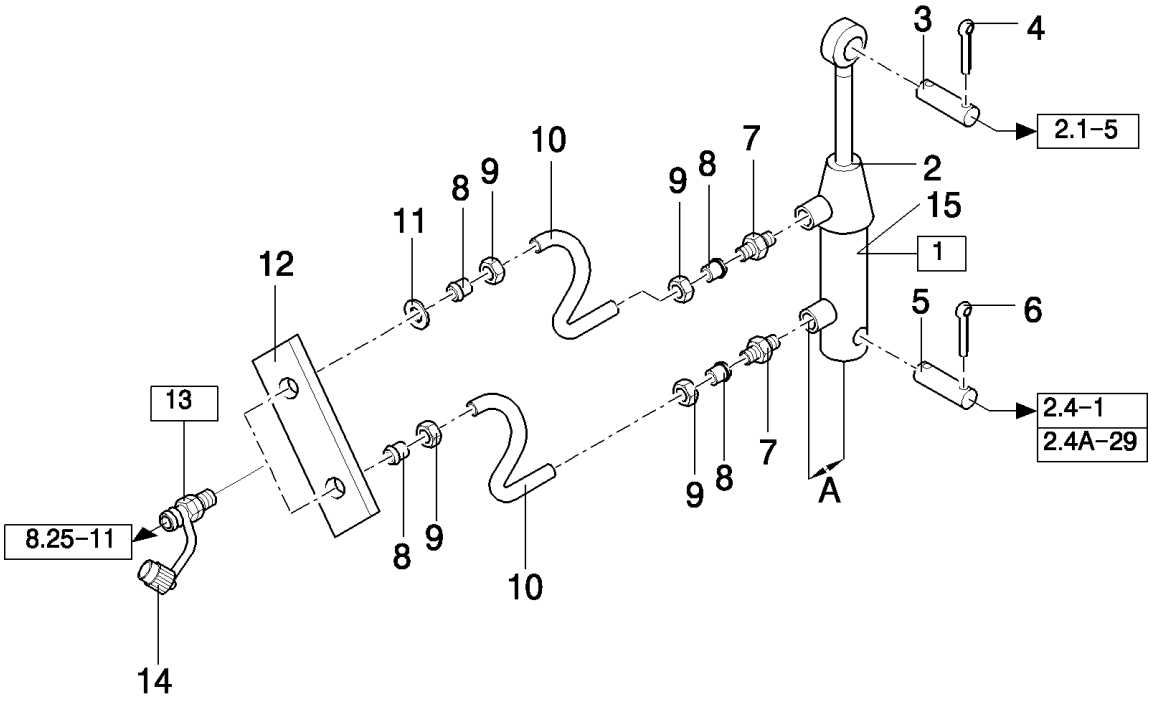

TX68 COMBINE - BASE UNIT

08.26(01) CYLINDER, LATERAL FLOTATION

ссылка	Номер детали	Кол-во	Описание
1	84014020	1	CYLINDER, (2,15)
2	9514528	1	BUSHING,
3	9509747	1	PIN, , -C5660
3	89500923	1	PIN, , D5660-
4	130007	2	PIN, SPLIT (COTTER), M4 x 25,
5	9593306	1	PIN,
6	412686	2	PIN, SPLIT (COTTER), M5 x 32,
7	386215	2	CONNECTOR, HYD.,
8	335136	4	FERRULE,
9	335135	4	NUT,
10	371540	AR	TUBE, RIGID, DIA.:8MM,L:2M
11	747811	1	WASHER,
12	9511545	1	PLATE,
13	456017	2	COUPLING, QUICK, MALE, (14)
14	456019	2	COVER, CAP,
15	9514497	1	KIT, SEALS, A:42.5MM
15	84026075	1	KIT, SEALS, A:45MM

08.27(01) HYDRAULICS FOR MAIN DRIVE, UNLOADING MECHANISM AND HEADER DRIVE ENGAGING

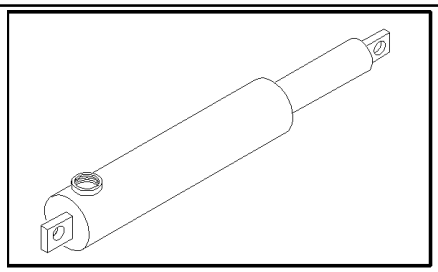

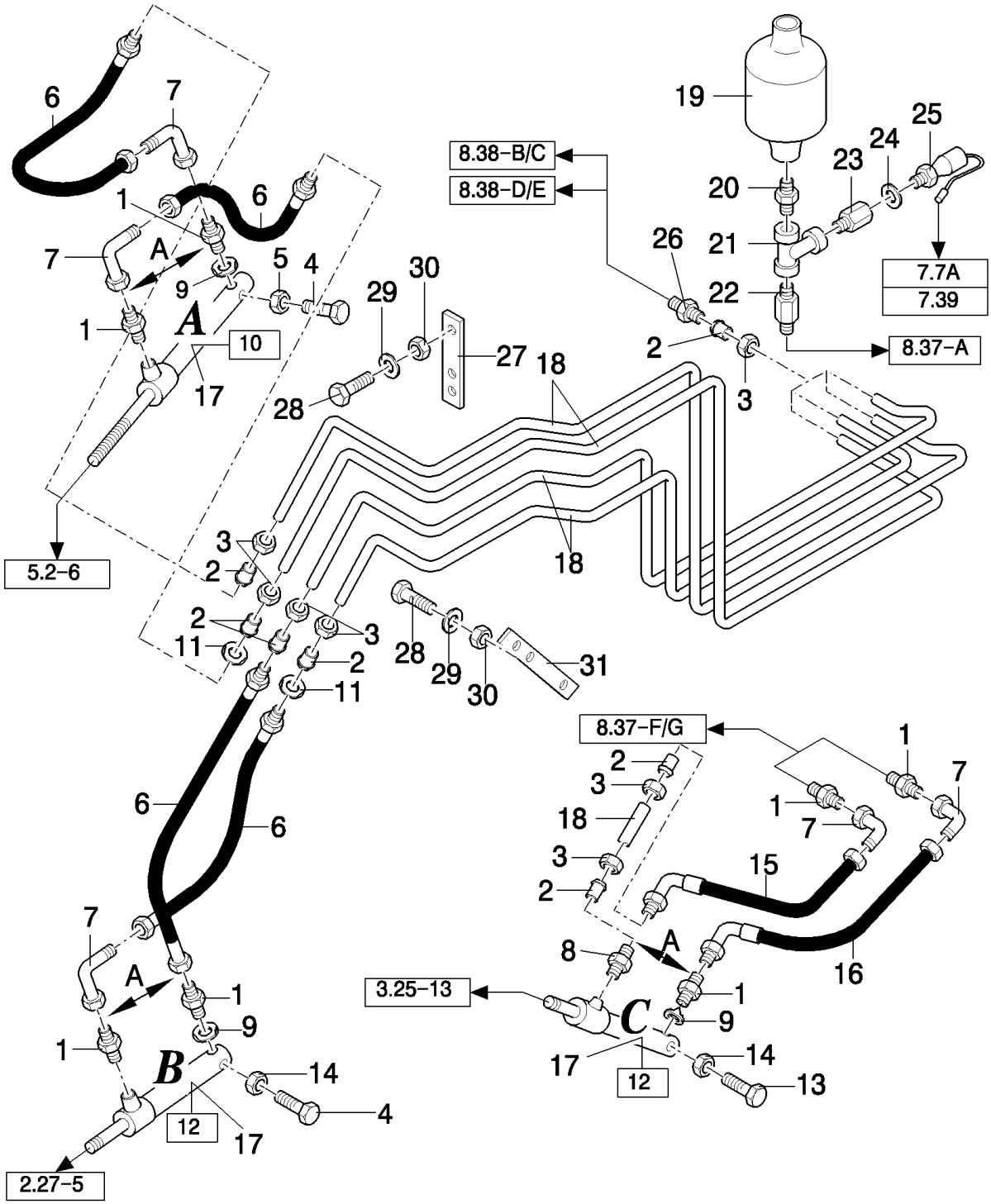

TX68 COMBINE - BASE UNIT

08.27(01) HYDRAULICS FOR MAIN DRIVE, UNLOADING MECHANISM AND HEADER DRIVE ENGAGING

ссылка	Номер детали	Кол-во	Описание
1	386215	7	CONNECTOR, HYD.,
2	335136	AR	FERRULE,
3	335135	AR	NUT,
4	9706717	2	BOLT, Hex, M12 x 70, 8.8, Full Thd, M12x70
5	412126	1	NUT, LOCK, M12 x 1.75, Cl 8,
6	424524	4	HOSE, HYDRAULIC,
7	418283	5	ELBOW, , -C5500
7	418283	4	ELBOW, , D5500-
8	396162	1	CONNECTOR, HYD.,
9	410897	3	VALVE, RESTRICTOR,
10	9502450	1	HYDRAULIC CYLINDER, (17), CYLINDER A WITH UNLOADING MECHANISM ENGAGEMENT
11	423996	2	ORIFICE, 0.5MM, -C6670
11	423996	1	ORIFICE, 0.5MM, D6670-
11	350657	1	VALVE, RESTRICTOR, 1.5MM, D6670-
12	398860	2	HYDRAULIC CYLINDER, (17), CYLINDER C WITH THRESHING DRIVE ENGAGEMENT, CYLINDER B WITH HEADER DRIVE ENGAGEMENT, BSN C327
12	84807314	2	HYDRAULIC CYLINDER, , CYLINDER B WITH HEADER DRIVE ENGAGEMENT, CYLINDER C WITH THRESHING DRIVE ENGAGEMENT, ASN D328
13	43158	1	BOLT, Hex, M12 x 80, 8.8,
14	100038	2	NUT, M12 x 1.75, Cl 8,
15	9839226	1	HOSE, , -C5500
15	9839227	1	HOSE, HYDRAULIC, , D5500-
16	9839227	1	HOSE, HYDRAULIC,
17	427034	3	KIT, SEALS, A:222MM or A:142MM
17	84023899	3	KIT, SEALS, A:169MM or A:89MM
18	371540	1	TUBE, RIGID, DIA.:8MM,L:2M
19	9508818	1	ACCUMULATOR, 55 BAR, FOR TX66-68 ONLY
19	84018324	1	ACCUMULATOR, 55 BAR, FOR TX64-65-67 ONLY, FOR TX63 WITH REMOTE CONTROL
20	84000316	1	CONNECTOR, HYD.,
21	444325	1	CONNECTION, 3 WAY,
22	84000315	1	CONNECTOR, HYD., , WITH LATERAL FLOTATION
22	84012402	1	CONNECTOR, HYD., , WITHOUT LATERAL FLOTATION
23	9838275	1	CONNECTOR, HYD.,
24	84000705	1	GASKET,
25	84011429	1	SWITCH, PRESSURE, , -C1109
25	84043881	1	SWITCH, PRESSURE, , D1110-
26	386215	4	CONNECTOR, HYD.,
27	9832316	1	BRACKET,
28	80120099	2	BOLT, Hex, M6 x 16, 8.8,
29	322357	2	WASHER, SPRING, Belleville, M6,
30	15896221	2	NUT, M6, Cl 10,
31	9832317	1	BRACKET,

FOR TX63 WITH REMOTE CONTROL ONLY

08.28(01) HYDRAULIC PARTS FOR UNLOADING TUBE

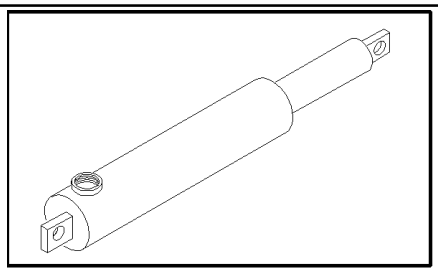

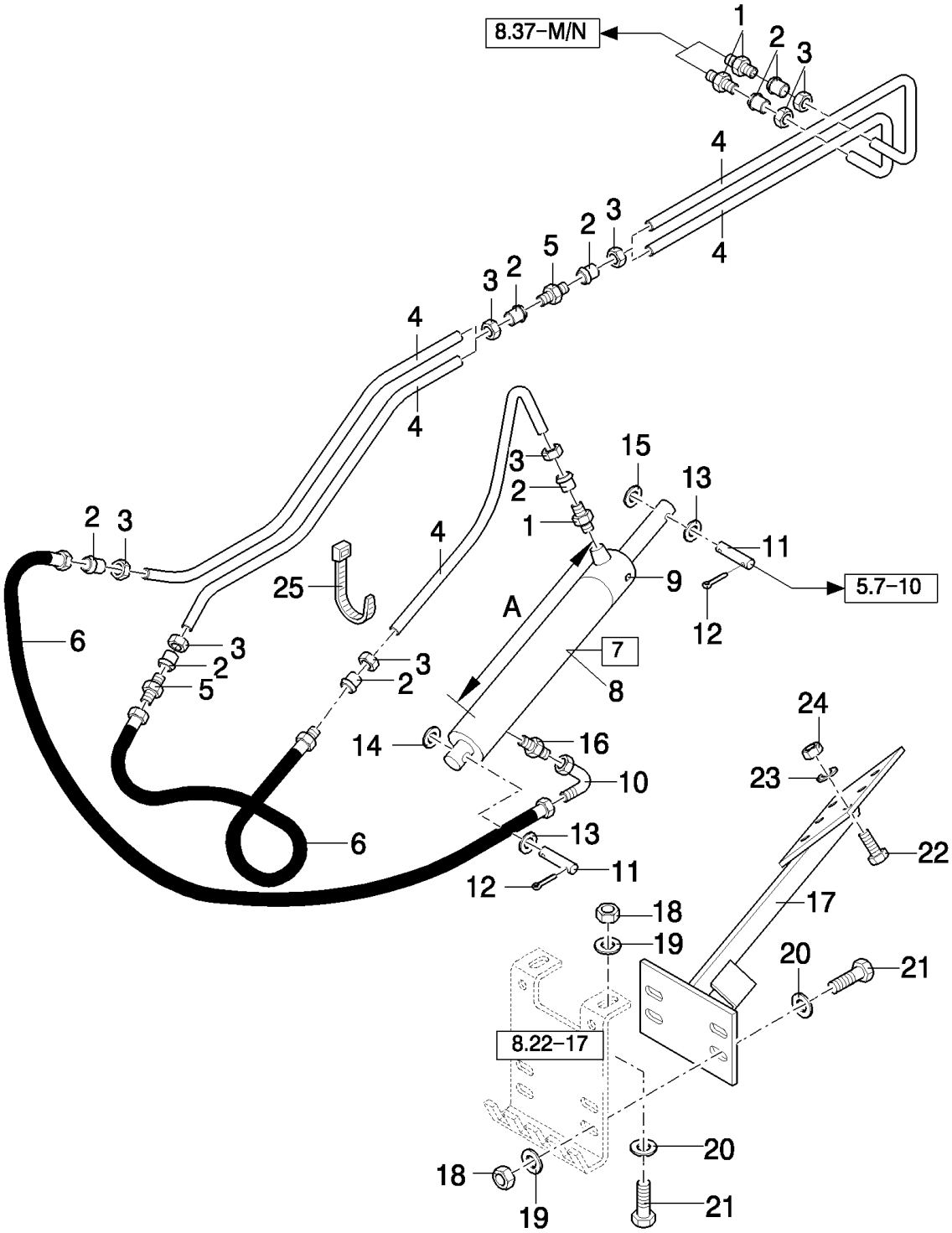

TX68 COMBINE - BASE UNIT

08.28(01) HYDRAULIC PARTS FOR UNLOADING TUBE

ссылка	Номер детали	Кол-во	Описание
1	386215	3	CONNECTOR, HYD.,
2	335136	AR	FERRULE,
3	335135	AR	NUT,
4	371540	AR	TUBE, RIGID, DIA.:8MM,L:2M
5	335172	2	CONNECTOR, HYD.,
6	424524	2	HOSE, HYDRAULIC,
7	84038955	1	HYDRAULIC CYLINDER, (8,9)
8	9508805	1	KIT, SEALS, A:771MM
8	84023786	1	KIT, SEALS, A:709MM
9	9832720	1	SLEEVE, , FOR CYLINDER WITH A=771MM ONLY
10	418283	1	ELBOW,
11	916105	2	PIN,
12	412686	4	PIN, SPLIT (COTTER), M5 x 32,
13	916107	2	WASHER, 35 OD x 25.5 ID x 4 mm Thick
14	378247	1	WASHER, 20MM
15	916106	1	WASHER,
16	451205	1	CONNECTOR, HYD.,
17	9812227	1	SUPPORT,
18	9706690	7	NUT, M8, Cl 8,
19	322358	6	WASHER, SPRING, Belleville, M8,
20	378243	6	WASHER, M8,
21	43127	6	BOLT, Hex, M8 x 25, 8.8,
22	9706687	6	SCREW, Hex, M12 x 30, 8.8,
23	140046	6	WASHER, Belleville, M12,
24	337475	6	NUT, M12, Cl 10,
25	381145	1	CLAMP,

08.29(01) HYDRAULIC LINES FOR STEERING VALVE

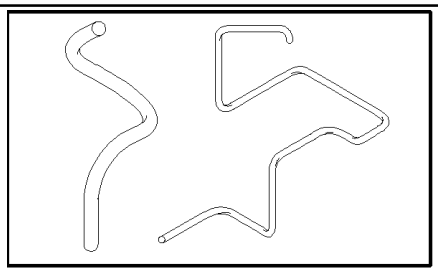

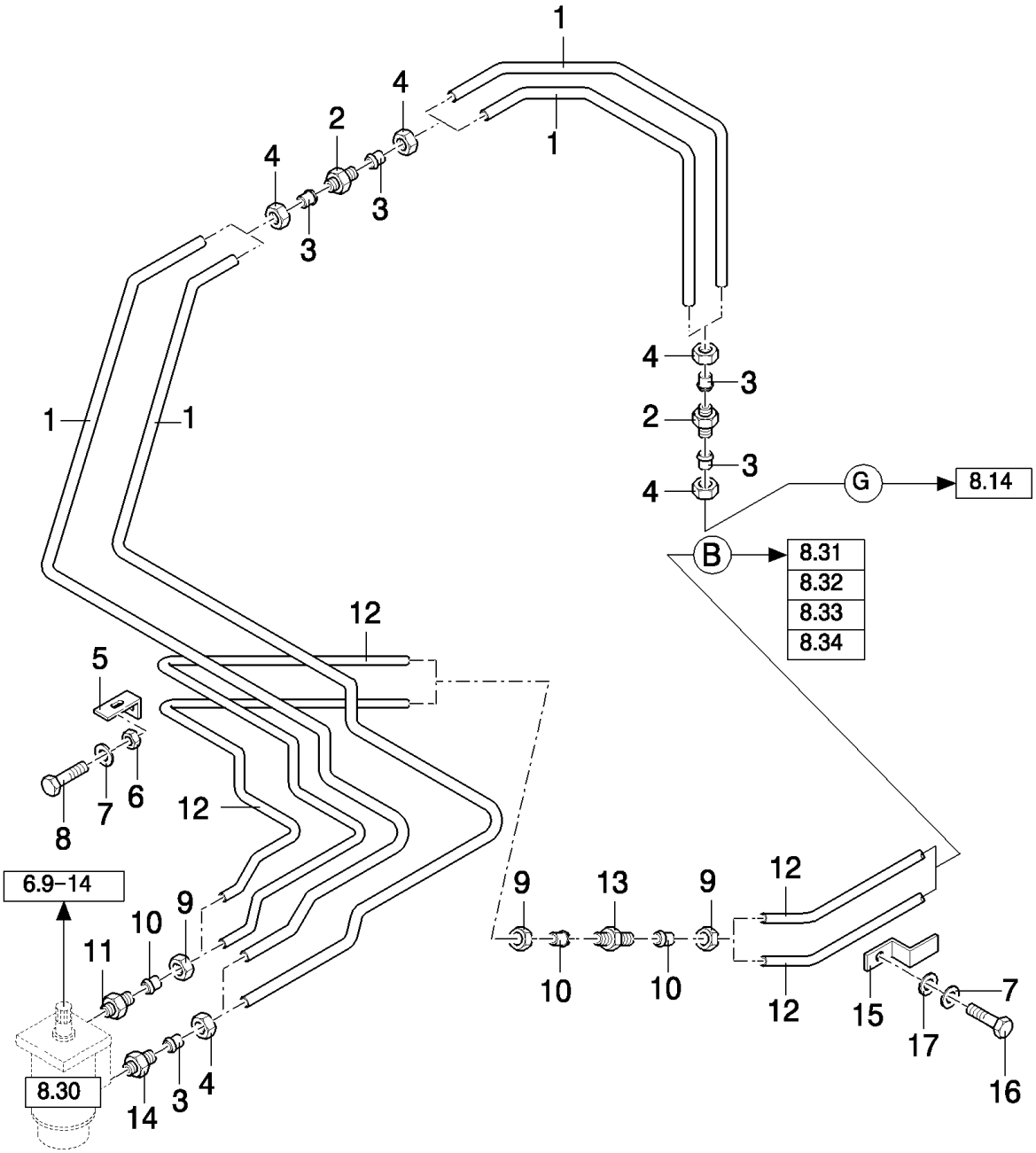

TX68 COMBINE - BASE UNIT

08.29(01) HYDRAULIC LINES FOR STEERING VALVE

ссылка	Номер детали	Кол-во	Описание
1	371536	AR	TUBE, RIGID, DIA.:16MM,L:2M
2	335174	4	CONNECTOR, HYD.,
3	335169	AR	FERRULE,
4	335171	AR	NUT,
5	84005429	1	BRACKET,
6	15896221	1	NUT, M6, Cl 10,
7	322357	1	WASHER, SPRING, Belleville, M6,
8	80120099	1	BOLT, Hex, M6 x 16, 8.8,
9	86548975	6	NUT,
10	150014	6	FERRULE,
11	395019	2	CONNECTOR, HYD.,
12	371539	AR	TUBE, RIGID, DIA.:10MM,L:2M
13	150017	2	CONNECTOR, HYD.,
14	394372	2	CONNECTOR, HYD.,
15	9512617	1	SUPPORT,
16	120100	1	BOLT, Hex, M6 x 20, 8.8,
17	140015	1	WASHER, 6MM

08.30(01) STEERING VALVE

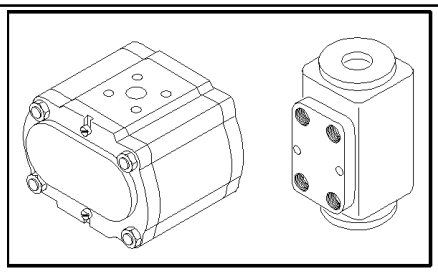

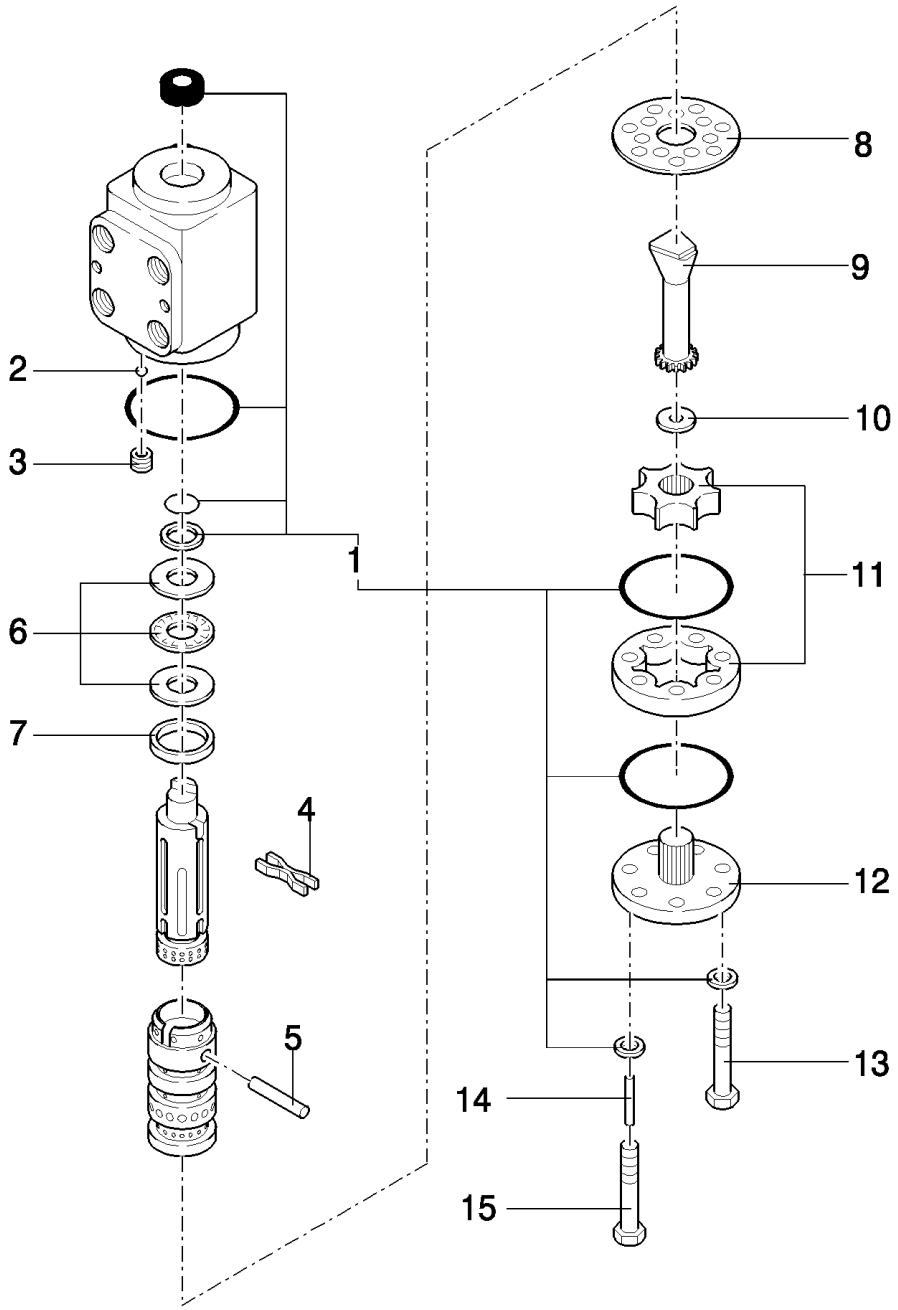

TX68 COMBINE - BASE UNIT

08.30(01) STEERING VALVE

ссылка	Номер детали	Кол-во	Описание
	9511497	1	VALVE, HYDRAULIC, (1 to 15), FOR TX62-63-64-65-66 ONLY
	9511499	1	VALVE, HYDRAULIC, (1 to 15, 16), FOR TX67-68 ONLY
	9511499	1	VALVE, HYDRAULIC, (1 to 15, 16), FOR HEAVY DUTY STEERING AXLE ONLY
1	449243	1	KIT, SEALS,
2	326447	1	BALL,
3	326446	1	SCREW,
4	433273	6	SPRING,
5	394849	1	PIN,
6	449242	1	SET OF RINGS,
7	326432	1	RING,
8	326436	1	PLATE, COVER,
9	449241	1	SHAFT,
10	449240	1	SPACER,
11	449239	1	STATOR, ALTERNATOR,
12	326441	1	COVER,
13	412552	6	SCREW,
14	326444	1	PIN,
15	449238	1	SCREW,
16	84053469	1	KIT, SEALS,

08.31(01) STEERING CYLINDERS AND PIPES FOR FIXED AND POWERED STEERING AXLE

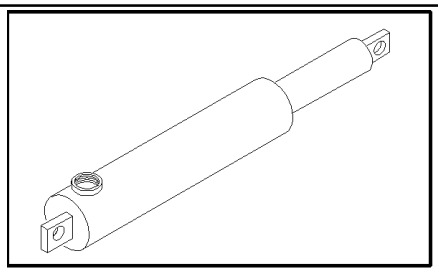

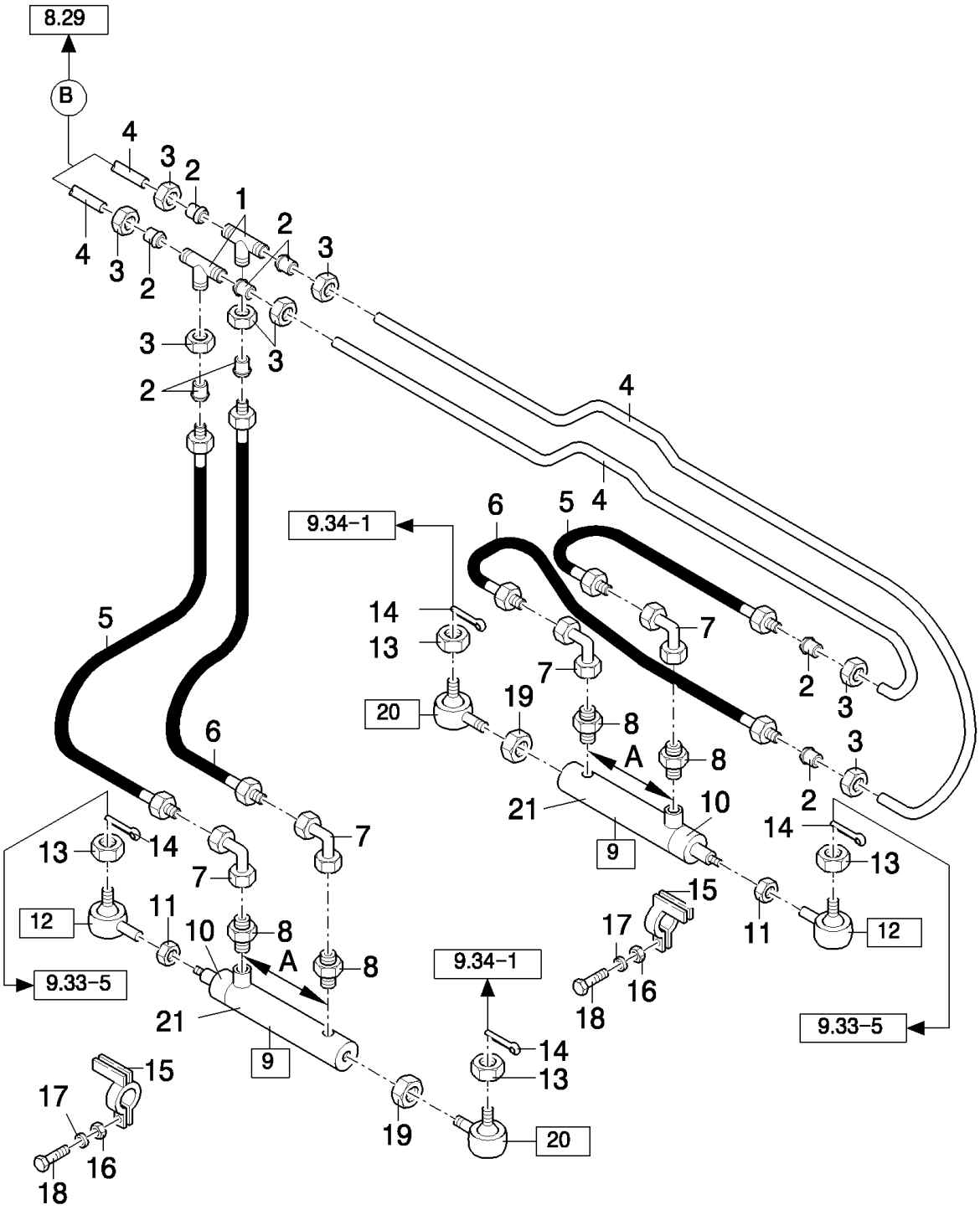

TX68 COMBINE - BASE UNIT

08.31(01) STEERING CYLINDERS AND PIPES FOR FIXED AND POWERED STEERING AXLE

ссылка	Номер детали	Кол-во	Описание
1	395472	2	CONNECTION, 3 WAY,
2	150014	AR	FERRULE,
3	86548975	AR	NUT,
4	371539	AR	TUBE, RIGID, DIA.:10MM,L:2M
5	916188	2	HOSE, FLEXIBLE,
6	734029	2	HOSE, HYDRAULIC,
7	418284	6	ELBOW,
8	395019	4	CONNECTOR, HYD.,
9	378632	2	CYLINDER, (10,21)
10	327454	2	BUSHING, , FOR CYLINDER WITH A=349MM ONLY
11	320771	2	NUT, Thin, M20 x 1.5, Cl 04,
12	89817314	2	BALL JOINT, (13,14)
13	100036	4	NUT, SLOTTED, M16 x 1.5, Cl 04,
13	412103	4	NUT, M18
14	412685	4	PIN, SPLIT (COTTER), M4 x 32, 3.2x20
14	300595	4	PIN, SPLIT (COTTER), M4 x 40,
15	921196	2	CLAMP,
16	9706690	2	NUT, M8, Cl 8,
17	322358	2	WASHER, SPRING, Belleville, M8,
18	43128	2	BOLT, Hex, M8 x 30, 8.8,
19	331209	2	NUT, 13/16"-16, G2,
20	84022165	2	BALL JOINT, (13,14)
21	395928	1	KIT, SEALS, A:349MM
21	84026019	1	KIT, SEALS, A:282MM

08.32(01) ADJUSTABLE STEERING AXLE - HEAVY DUTY (HD)

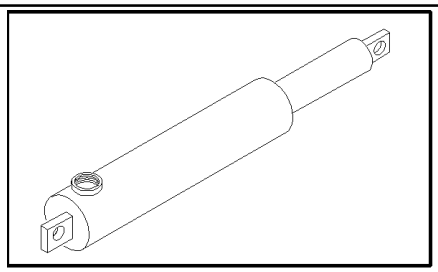

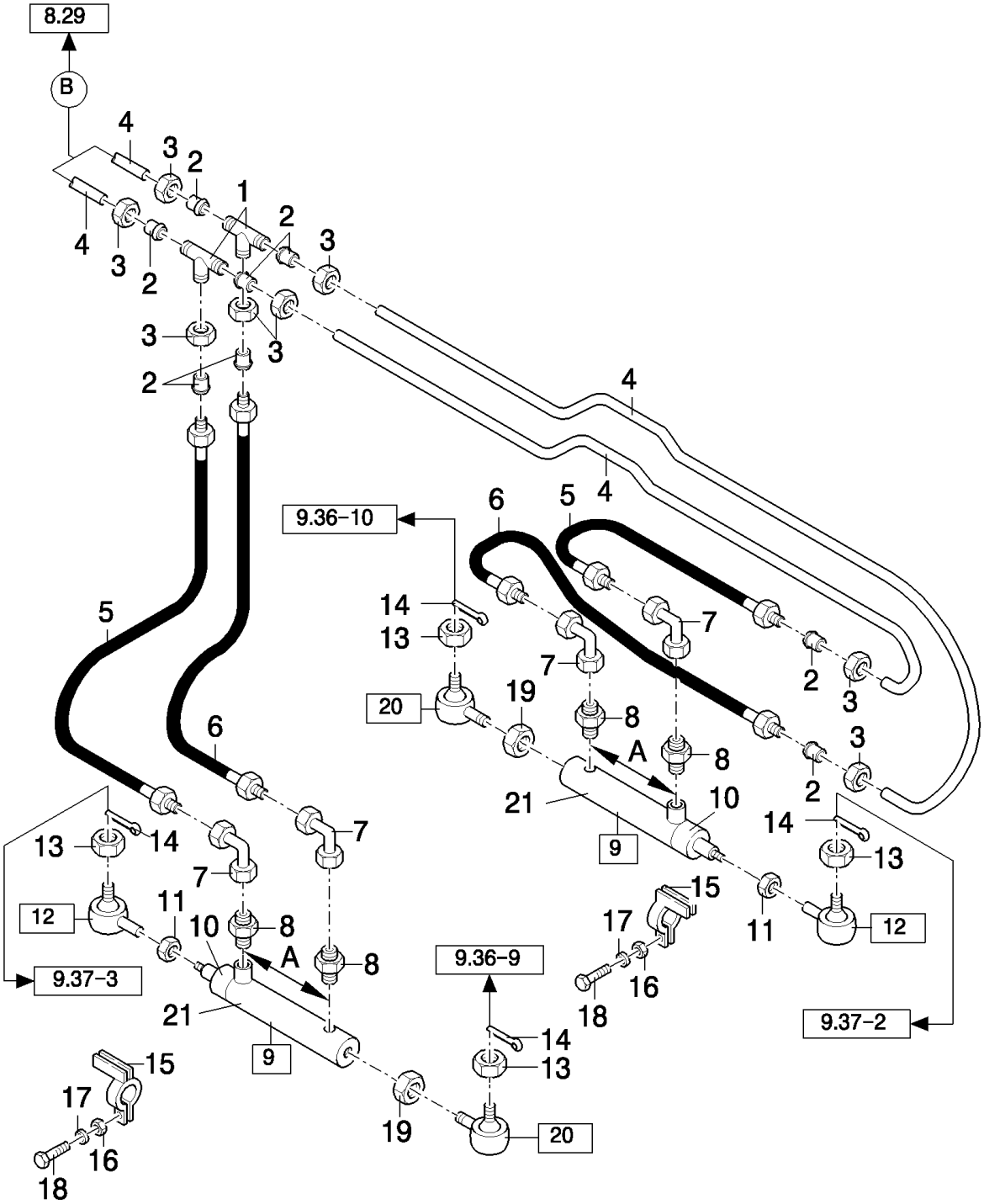

TX68 COMBINE - BASE UNIT

08.32(01) ADJUSTABLE STEERING AXLE - HEAVY DUTY (HD)

ссылка	Номер детали	Кол-во	Описание
1	395472	2	CONNECTION, 3 WAY,
2	150014	AR	FERRULE,
3	86548975	AR	NUT,
4	371539	AR	TUBE, RIGID, DIA.:10MM,L:2M
5	916188	2	HOSE, FLEXIBLE,
6	734029	2	HOSE, HYDRAULIC,
7	418284	6	ELBOW,
8	395019	4	CONNECTOR, HYD.,
9	378632	2	CYLINDER, (10,21)
10	327454	2	BUSHING, , FOR CYLINDER WITH A=349MM ONLY
11	320771	2	NUT, Thin, M20 x 1.5, Cl 04,
12	89817314	2	BALL JOINT, (13,14)
13	100036	4	NUT, SLOTTED, M16 x 1.5, Cl 04,
13	412103	4	NUT, M18
14	412685	4	PIN, SPLIT (COTTER), M4 x 32, 3.2x20
14	300595	4	PIN, SPLIT (COTTER), M4 x 40,
15	921196	2	CLAMP,
16	9706690	2	NUT, M8, Cl 8,
17	322358	2	WASHER, SPRING, Belleville, M8,
18	43128	2	BOLT, Hex, M8 x 30, 8.8,
19	331209	2	NUT, 13/16"-16, G2,
20	84022165	2	BALL JOINT, (13,14)
21	395928	1	KIT, SEALS, A:349MM
21	84026019	1	KIT, SEALS, A:282MM

08.35(01) OIL COOLER

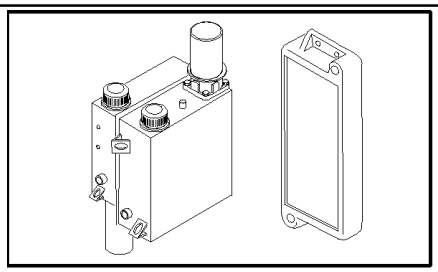

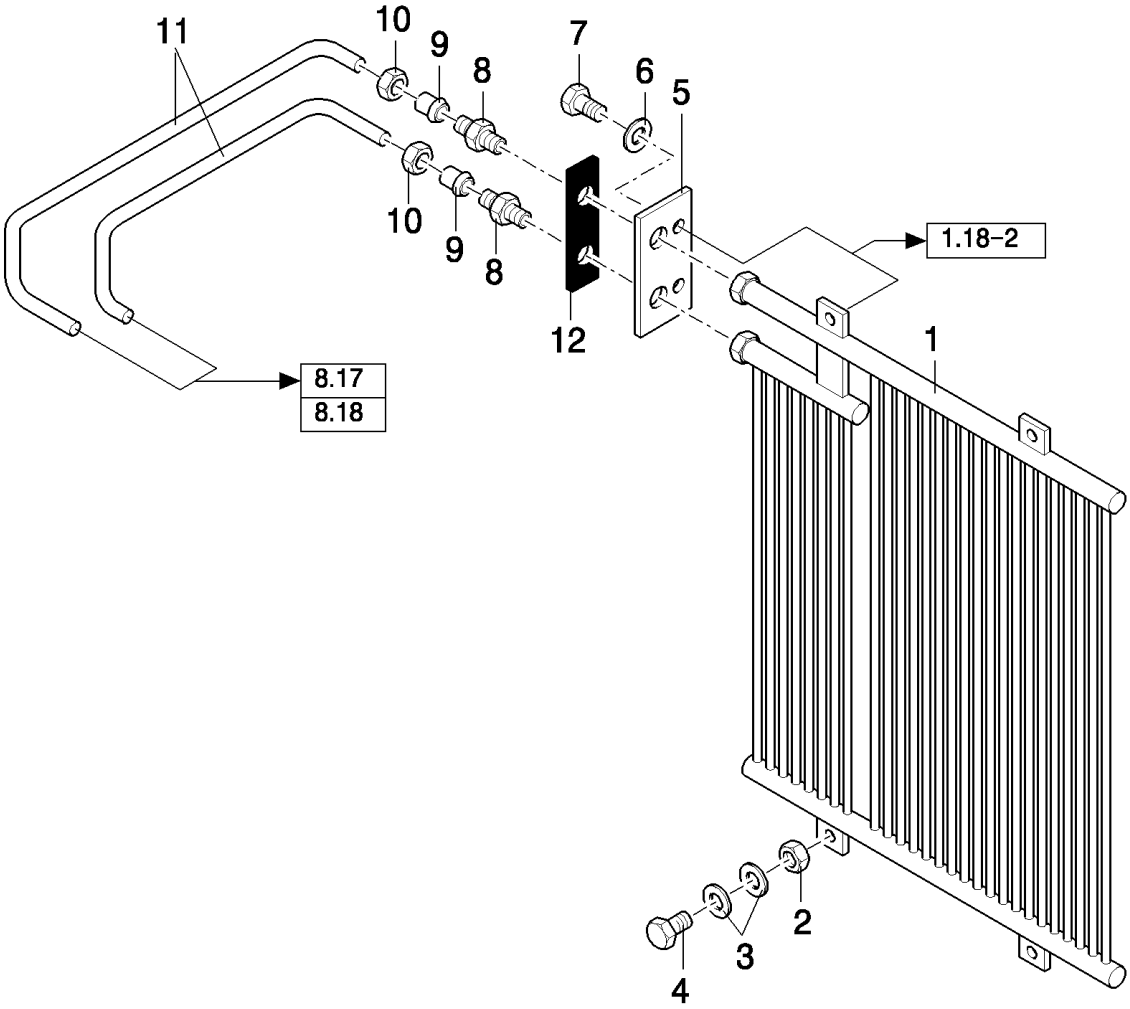

ONLY VALID UNTIL --1032999 (TX62-64-65-66-68PLUS) AND UNTIL --1076999 (NOT TX68PLUS)

TX68 COMBINE - BASE UNIT

08.35(01) OIL COOLER

ссылка	Номер детали	Кол-во	Описание
1	84021041	1	RADIATOR, , FOR TX62-64-65 ONLY
1	84021016	1	RADIATOR, , FOR TX66-68 ONLY
2	100016	4	NUT, M10, Cl 8,
3	140045	8	WASHER, SPRING, Belleville, M10,
4	11106231	4	BOLT, Hex, M10 x 25, 10.9, Full Thd,
5	84021155	1	PLATE, COVER, , FOR TX62-64-65 ONLY
5	84021252	1	PLATE, COVER, , FOR TX66-68 ONLY
6	322357	2	WASHER, SPRING, Belleville, M6,
7	120100	2	BOLT, Hex, M6 x 20, 8.8,
8	394373	2	CONNECTOR, HYD.,
9	335168	3	FERRULE,
10	335170	3	NUT,
11	371534	AR	TUBE, RIGID, DIA.:18MM,L:2M
12	84021154	1	ELEMENT, SEALING, , FOR TX62-64-65 ONLY
12	84021251	2	ELEMENT, SEALING, , FOR TX66-68 ONLY

ONLY VALID UNTIL --1032999 (TX62-64-65-66-68PLUS) AND UNTIL --1076999 (NOT TX68PLUS)

08.35A(01) OIL COOLER

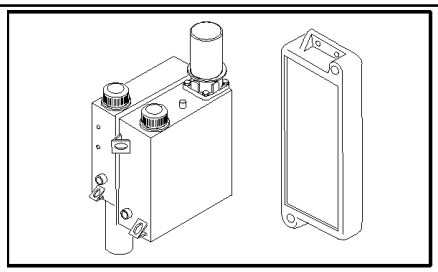

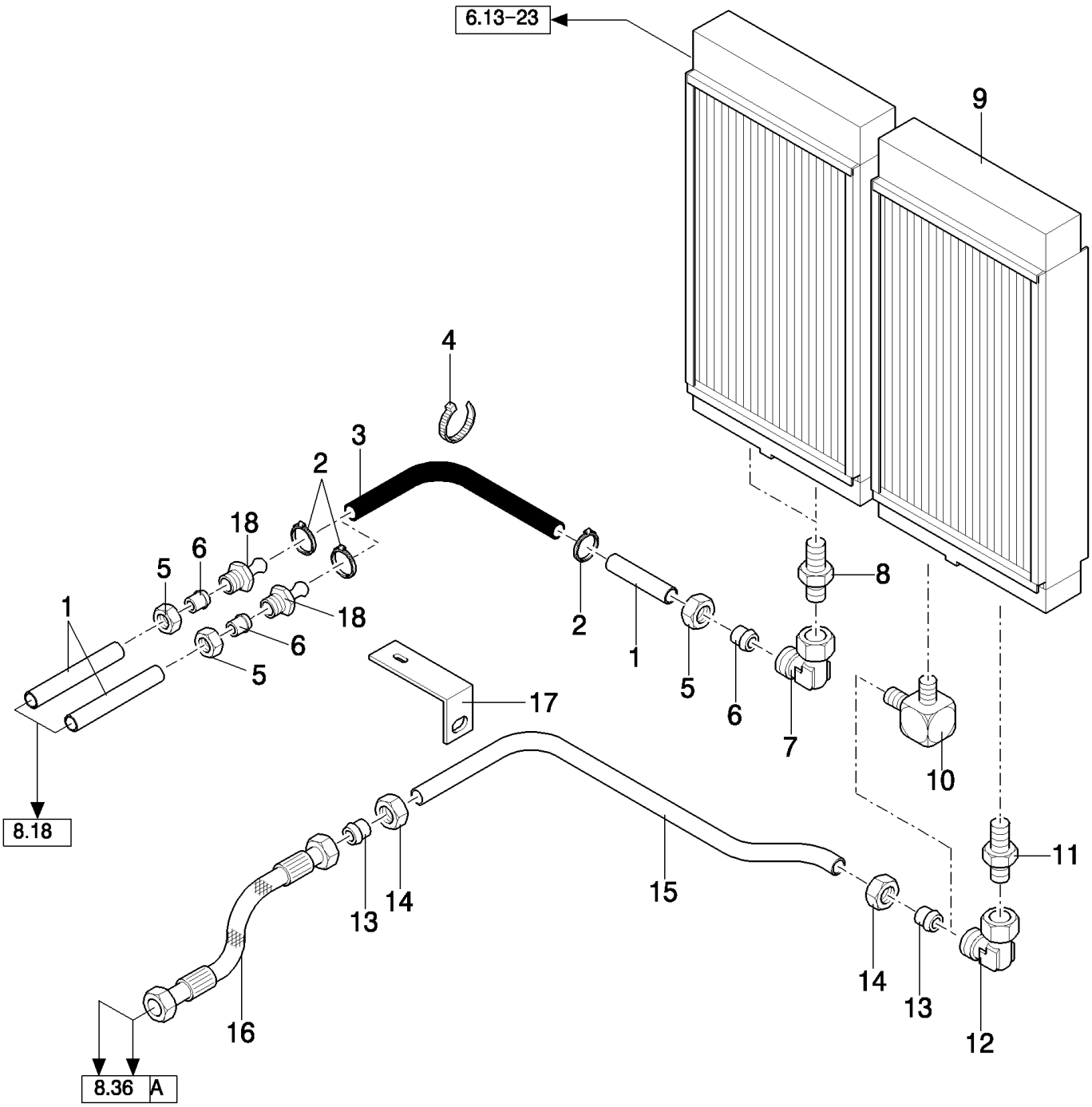

ONLY VALID FROM --1033001 (TX62-64-65-66-68PLUS) AND FROM --1077001 (NOT TX68PLUS)

TX68 COMBINE - BASE UNIT

08.35A(01) OIL COOLER

ссылка	Номер детали	Кол-во	Описание
1	371534	AR	TUBE, RIGID, DIA.:18MM,L:2M
2	326082	4	CLAMP,
3	84058460	2	HOSE,
4	396718	AR	STRAP,
5	335170	2	NUT,
6	335168	2	FERRULE,
7	84019177	2	ELBOW,
8	394373	2	CONNECTOR, HYD.,
9	84037238	1	RADIATOR, , WITH LATERAL FLOTATION
9	84037239	1	RADIATOR, , WITHOUT LATERAL FLOTATION, FOR TX62-63-64-65 ONLY
10	89514462	1	CONNECTOR, HYD., , -C1093
10	84058417	1	CONNECTOR, HYD., , D1094-
11	84032478	1	CONNECTOR, HYD.,
12	457573	1	ELBOW,
13	412528	4	FERRULE,
14	412527	4	NUT,
15	9811333	AR	TUBE, RIGID, DIA.:28MM,L:2M
16	84041619	2	HOSE, HYDRAULIC,
17	84041056	1	BRACKET, , FOR TX62-63-64-65-66-67 ONLY
17	84043242	1	BRACKET, , FOR TX68 ONLY
18	84000318	1	CONNECTOR, HYD.,

ONLY VALID FROM --1033001 (TX62-64-65-66-68PLUS) AND FROM --1077001 (NOT TX68PLUS)

08.36(01) HYDROSTATIC OIL COOLER AND OIL LINES

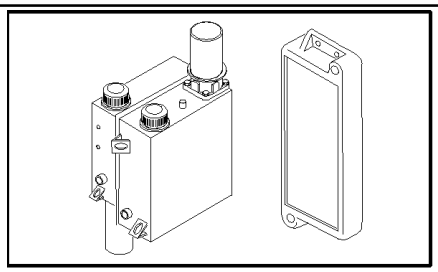

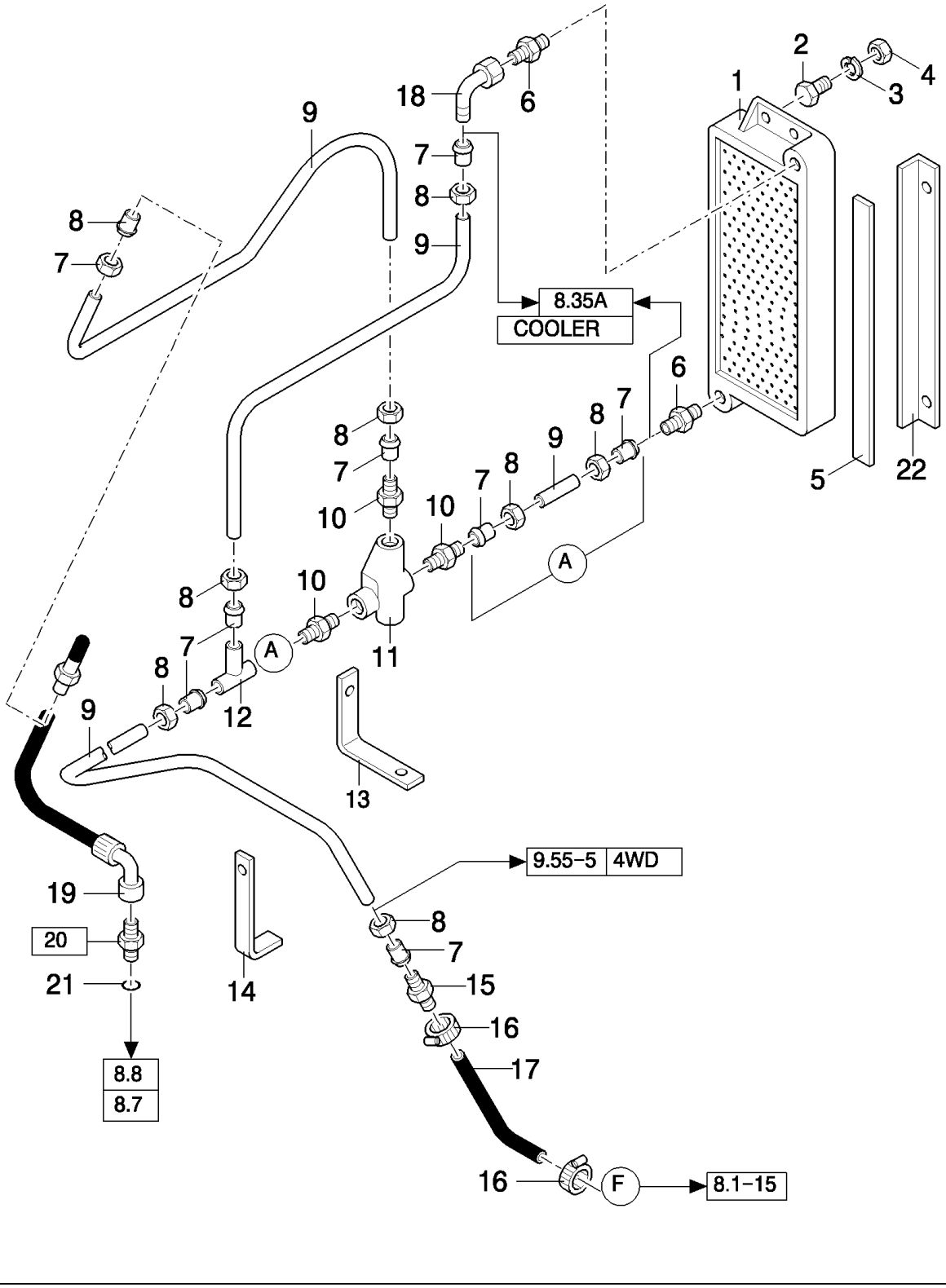

TX68 COMBINE - BASE UNIT

08.36(01) HYDROSTATIC OIL COOLER AND OIL LINES

ссылка	Номер детали	Кол-во	Описание
1	922665	1	RADIATOR, , FOR TX62-64-65-66 ONLY, -C1032
1	9838603	1	RADIATOR, , FOR TX68 ONLY, NOT FOR TX68PLUS, -C1076
2	43128	4	BOLT, Hex, M8 x 30, 8.8, , -C1032
3	322358	4	WASHER, SPRING, Belleville, M8, , -C1032
4	9706690	4	NUT, M8, Cl 8, , -C1032
5	84017379	1	ELEMENT, SEALING, L:5M, -C1032
6	447241	2	CONNECTOR, HYD., , FOR TX62-64-65-66-68 ONLY, -C1032
7	412528	AR	FERRULE,
8	412527	AR	NUT,
9	9811333	AR	TUBE, RIGID, DIA.:28MM,L:2M
10	918797	3	CONNECTOR, HYD.,
11	918289	1	THERMOSTAT,
12	919687	1	CONNECTION, 3 WAY,
13	84000228	1	BRACKET, , FOR TX66-67-68 ONLY, -C1032
13	84014494	1	BRACKET, , FOR TX62-64-65 ONLY, -C1032
14	84041622	1	BRACKET, , -C1032
15	457544	1	CONNECTOR, HYD.,
16	382527	2	CLAMP, HOSE,
17	919837	1	HOSE,
18	457573	1	ELBOW, , FOR TX62-64-65-66-68 ONLY, -C1032
19	9511912	1	HOSE, HYDRAULIC,
20	9511910	1	CONNECTOR, HYD., (21), FOR TX62-64-65-66 ONLY, -C1032
20	9818287	1	CONNECTOR, HYD., (21), FOR TX62-63-64-65-66 ONLY, D1033-
20	9818287	1	CONNECTOR, HYD., (21), FOR TX67-68 ONLY
21	167266	1	O-RING, 12-1, 90 Duro, .924 ID x .116" Thk, , FOR TX62-64-65-66 ONLY, -C1032
21	167268	1	O-RING, 16-1, 90 Duro, 1.171" ID x .116" Thk, , FOR TX62-63-64-65-66 ONLY, D1033-
21	167268	1	O-RING, 16-1, 90 Duro, 1.171" ID x .116" Thk, , FOR TX67-68 ONLY
22	80919825	1	ANGLE BAR, , FOR TX62-64-65-66-68 ONLY, -C1032

08.37(01) SB12 VALVE, WITH COMPENSATION AND LATERAL FLOTATION - UNTIL --1032999

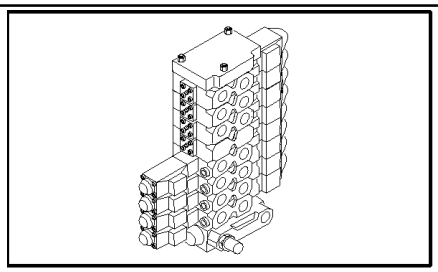

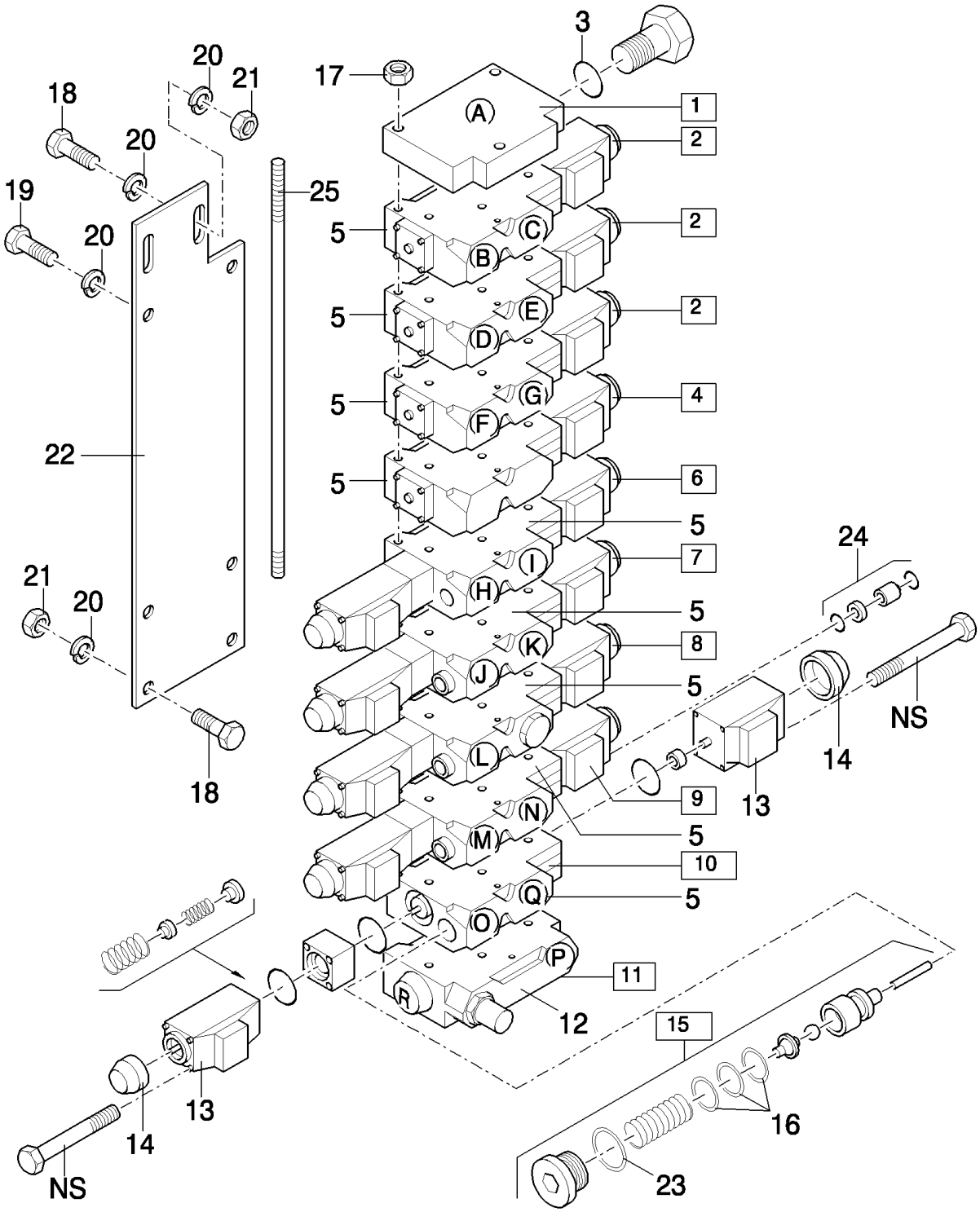

TX68 COMBINE - BASE UNIT

08.37(01) SB12 VALVE, WITH COMPENSATION AND LATERAL FLOTATION - UNTIL --1032999

ссылка	Номер детали	Кол-во	Описание
	9513730	1	VALVE, HYDRAULIC, (1 to 17,23), -C5660
	84021897	1	VALVE, HYDRAULIC, (1 to 17,23), D5660-
1	84014246	1	VALVE, HYDRAULIC, (3)
2	84014247	3	VALVE, HYDRAULIC, (5,13,14,24)
3	220022	3	SEALRING,
4	84014248	1	VALVE, HYDRAULIC, (5,13,14,24)
5	84014433	9	KIT, SEALS, , INCLUDES ALSO SEALS BETWEEN VALVES
6	84014249	1	VALVE, HYDRAULIC, (5,13 to 16,23,24), -C5660
6	84023000	1	VALVE, HYDRAULIC, (5,13 to 16,23,24), D5660-
7	84014250	1	VALVE, HYDRAULIC, (5,13,14,23,24)
8	84014251	1	VALVE, HYDRAULIC, (5,13 to 16,23,24)
9	84014252	1	VALVE, HYDRAULIC, (5,13,14,23,24)
10	84014253	1	VALVE, HYDRAULIC, (5,13 to 16,23,24)
11	84014254	1	VALVE SEAT, (12)
12	84014431	1	KIT, SEALS, , INCLUDES ALSO SEALS BETWEEN VALVES
13	84014432	14	ELECTROMAGNET,
14	84014430	14	PROTECTION CAP,
15	84039229	1	KIT, REPAIR, (16,23)
16	84041178	1	KIT, REPAIR,
17	86629542	3	NUT, LOCK, M8 x 1.25, Cl 8,
18	43127	4	BOLT, Hex, M8 x 25, 8.8,
20	322358	8	WASHER, SPRING, Belleville, M8,
21	9706690	4	NUT, M8, Cl 8,
22	9831887	1	SUPPORT,
23	84014436	AR	O-RING,
24	84014434	9	KIT, SERVICE,
25	84320067	3	ROD, THREADED,
19	16043224	4	BOLT, Hex, M8 x 16, 8.8, Full Thd,

08.37A(01) SB12 VALVE, WITH COMPENSATION AND LATERAL FLOTATION - FROM --1033001

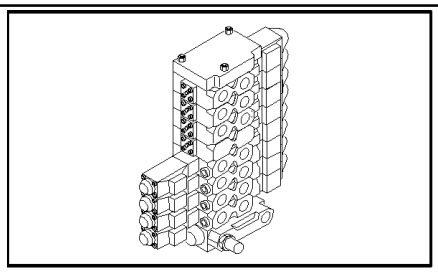

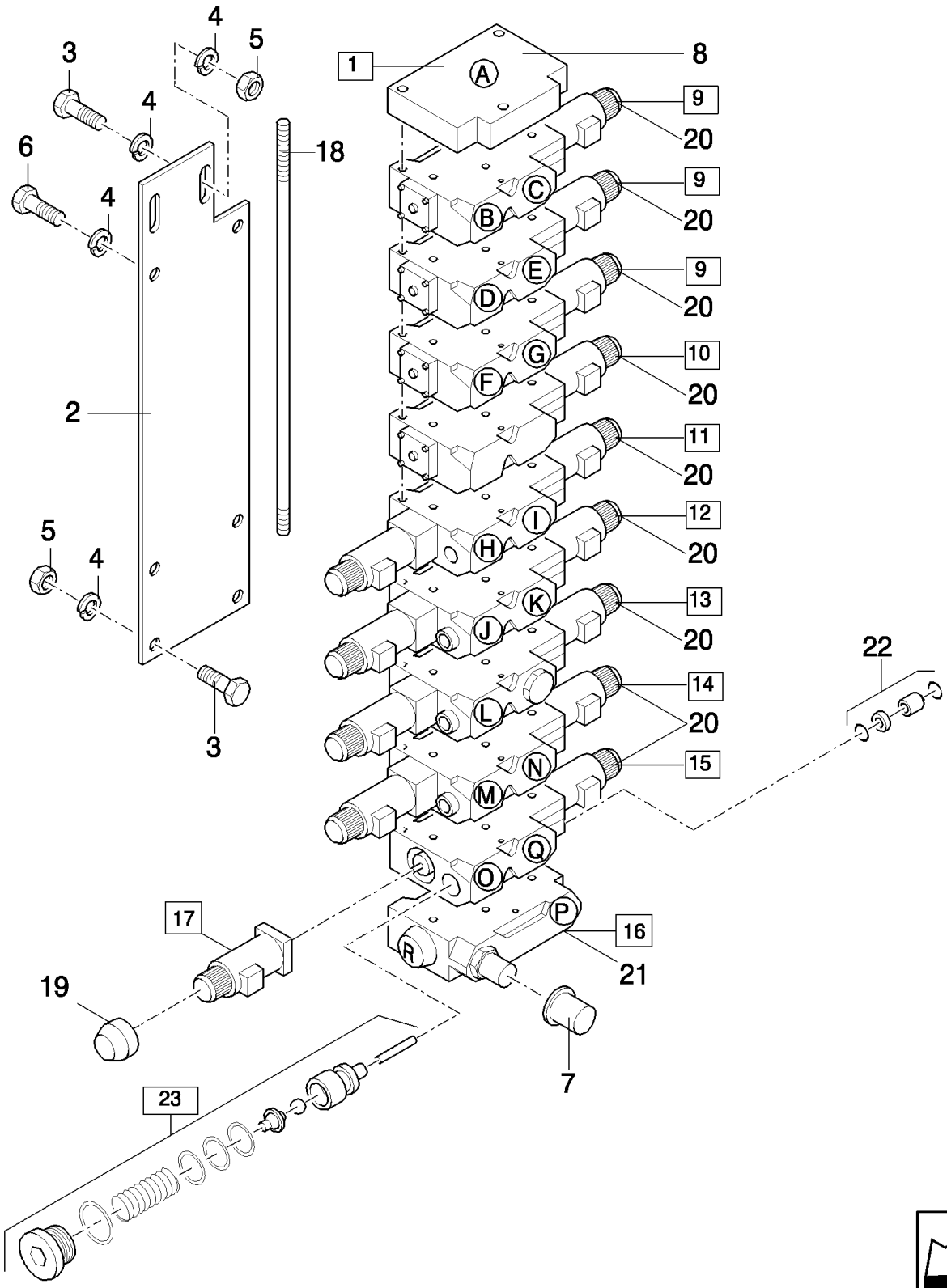

FOR TX63 WITH REMOTE CONTROL ONLY

TX68 COMBINE - BASE UNIT

08.37A(01) SB12 VALVE, WITH COMPENSATION AND LATERAL FLOTATION - FROM --1033001

ссылка	Номер детали	Кол-во	Описание
1	84043953	1	VALVE, HYDRAULIC, (8 to 16), -C1245
1	84814526		VALVE, HYDRAULIC, , D1246-
2	9831887	1	SUPPORT,
3	43127	4	BOLT, Hex, M8 x 25, 8.8,
4	322358	8	WASHER, SPRING, Belleville, M8,
5	9706690	4	NUT, M8, Cl 8,
7	84042643	1	COVER, CAP,
8	84023470	1	VALVE, HYDRAULIC,
9	84053373	3	VALVE, HYDRAULIC, (17,20,22)
10	84053374	1	VALVE, HYDRAULIC, (17,20,22)
11	84053376	1	VALVE, HYDRAULIC, (17,20,22,23)
12	84053377	1	VALVE, HYDRAULIC, (17,20,22)
13	84053379	1	VALVE, HYDRAULIC, (17,20,22,23)
14	84053380	1	VALVE, HYDRAULIC, (17,20,22)
15	84053381	1	VALVE, HYDRAULIC, (17,20,22,23), -C1245
15	84053380	1	VALVE, HYDRAULIC, (17,20,22), D1246-
16	84023001	1	VALVE SEAT, (21)
17	84062114	1	ELECTROMAGNET, PROP(19)
17	84062113	1	ELECTROMAGNET, ON/OFF(19)
18	84320067	3	ROD, THREADED,
19	84429046	AR	PROTECTION CAP,
20	84014433	AR	KIT, SEALS, , INCLUDES ALSO SEALS BETWEEN VALVES
21	84014431	AR	KIT, SEALS,
22	84014434	AR	KIT, SERVICE,
23	84039229	AR	KIT, REPAIR,
6	16043224	4	BOLT, Hex, M8 x 16, 8.8, Full Thd,

FOR TX63 WITH REMOTE CONTROL ONLY

08.41(01) TUBE CLAMPS AND HYDRAULIC TUBES

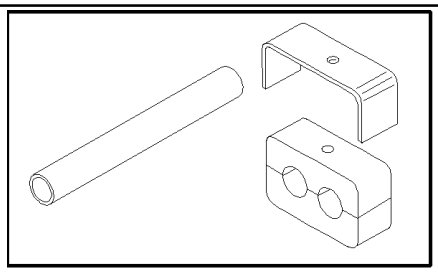

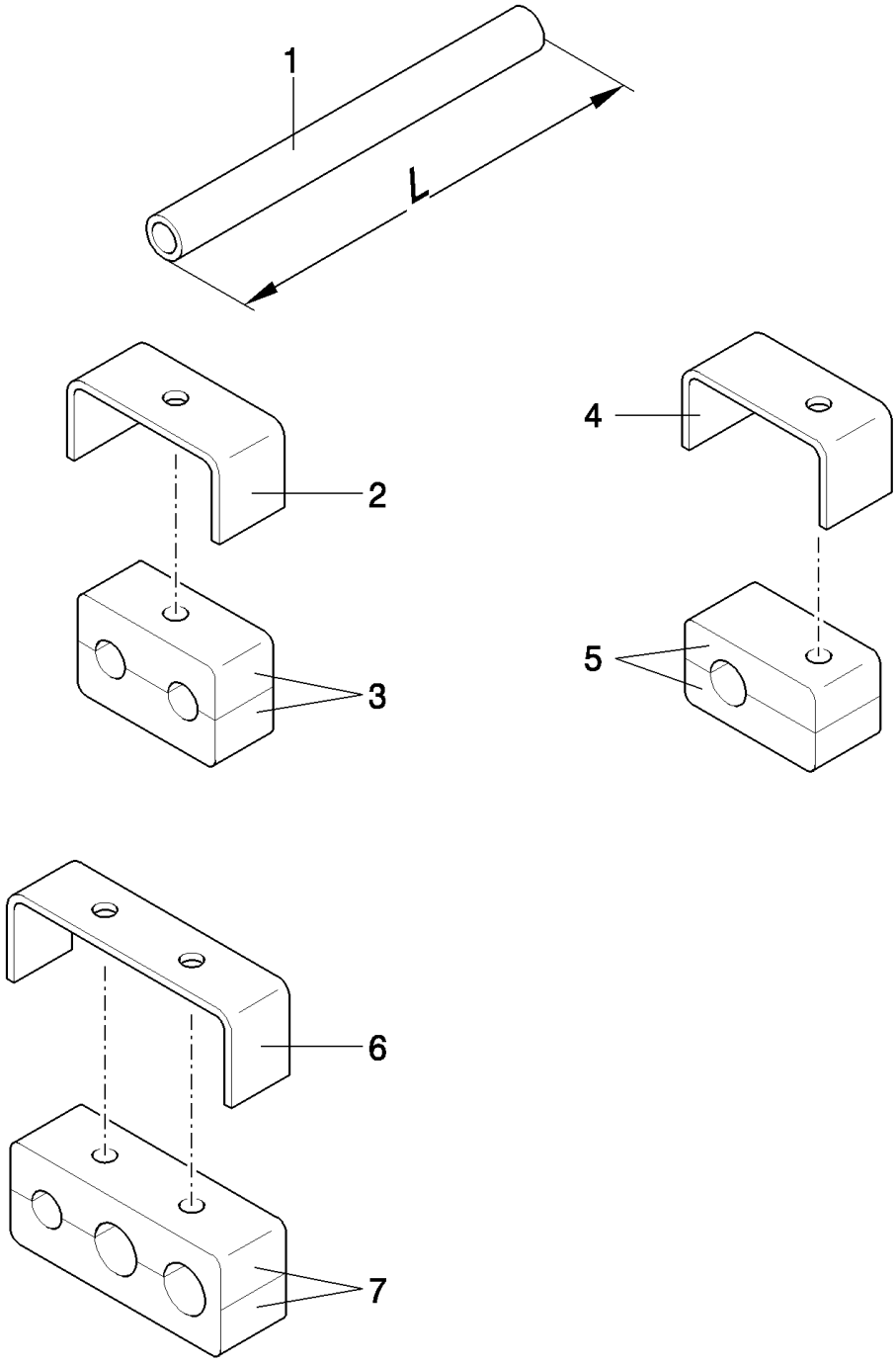

TX68 COMBINE - BASE UNIT

08.41(01) TUBE CLAMPS AND HYDRAULIC TUBES

ссылка	Номер детали	Кол-во	Описание
1	371540	AR	TUBE, RIGID, DIA.:8MM,L:2M
1	371539	AR	TUBE, RIGID, DIA.:10MM,L:2M
1	9513719	AR	TUBE, RIGID, DIA.:12MM,L:2M
1	371536	AR	TUBE, RIGID, DIA.:16MM,L:2M
1	371534	AR	TUBE, RIGID, DIA.:18MM,L:2M
1	9811333	AR	TUBE, RIGID, DIA.:28MM,L:2M
1	75931	AR	TUBE, RIGID, DIA.:3/8",L:48"
1	75932	AR	TUBE, RIGID, DIA.:1/2",L:48"
1	75933	AR	TUBE, RIGID, DIA.:5/8",L:48"
1	75934	AR	TUBE, RIGID, DIA.:3/4",L:48"
2	431941	AR	SUPPORT, 8-12MM
2	431942	AR	SUPPORT, Hex Hd, #10-32 x 1/2", 16MM-3/4"
2	743320	AR	SUPPORT, 28MM
3	430357	AR	CLAMP, 8-12MM
3	430356	AR	CLAMP, 16MM-3/4"
3	457547	AR	CLAMP, 28MM
4	433101	AR	SUPPORT, 8-10MM
4	442340	AR	SUPPORT, 12MM
4	433100	AR	SUPPORT, 16MM-3/4"
4	743318	AR	SUPPORT, 28MM
5	433008	AR	CLAMP, 8-12MM
5	433007	AR	CLAMP, 16MM-3/4"
5	457546	AR	CLAMP, 28MM
6	455534	AR	SUPPORT,
7	455533	AR	CLAMP,

SECTIONS	**SECTIONS**	**SECCIONES**	**AFSNIT**
SEZIONI	**ABSCHNITTE**	**SECÇÕES**	**SECTIES**

SEC. 9

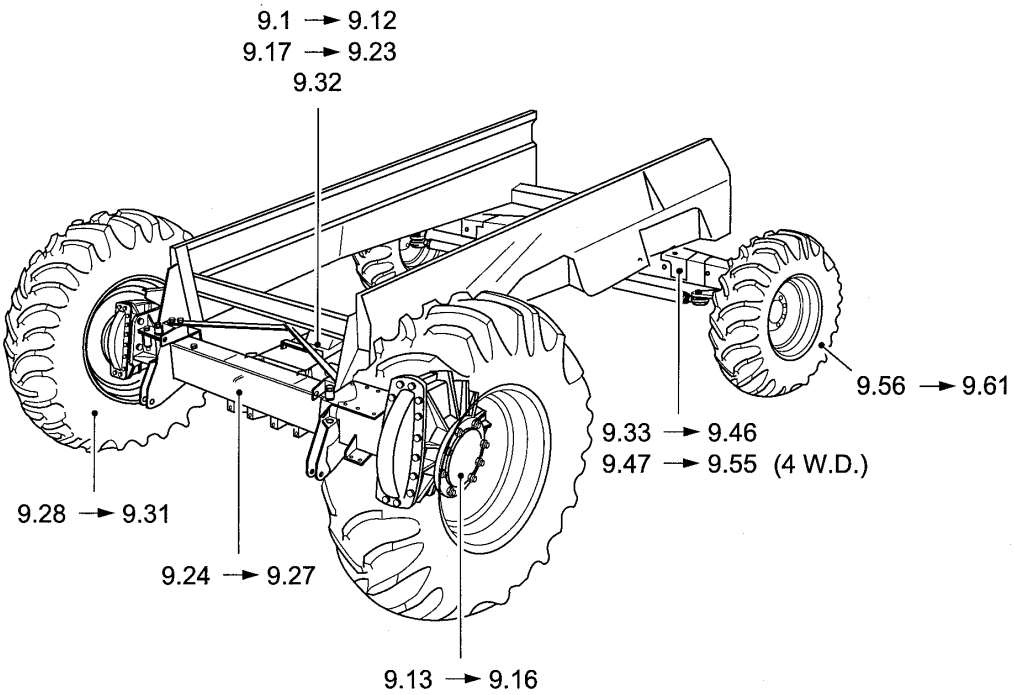

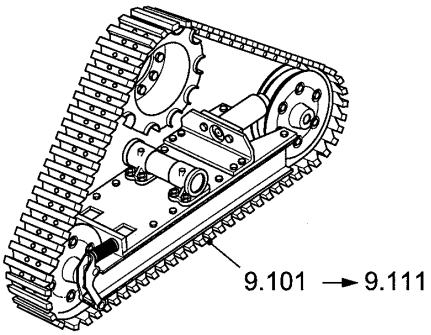

ссылка	Номер детали	Кол-во	Описание

09.001(01) GEARSHIFT CONTROL

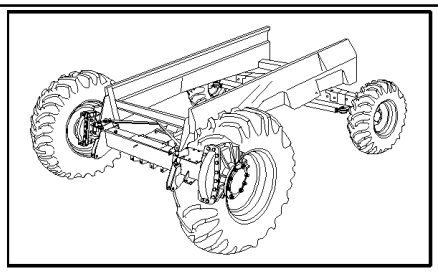

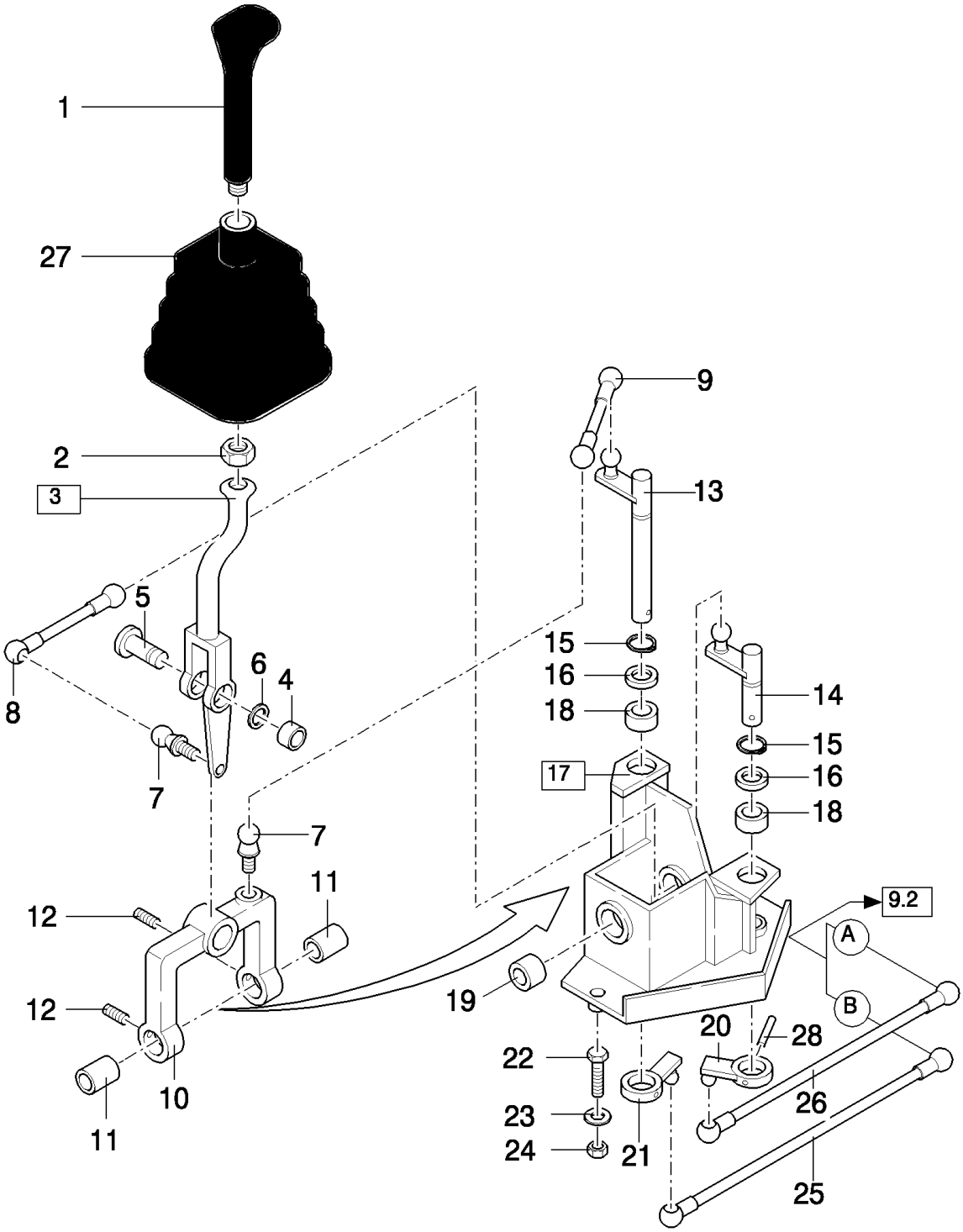

TX68 COMBINE - BASE UNIT

09.001(01) GEARSHIFT CONTROL

ссылка	Номер детали	Кол-во	Описание
1	445968	1	LEVER, , -C6405
1	84038234	1	LEVER, , D6405-
2	379752	1	NUT, M12 x 1.25, Cl 10, M12
3	9819631	1	LEVER, (4)
4	420761	2	BUSHING,
5	9831112	1	PIN,
6	370024	1	RING, SNAP, M20, Ext,
7	9831211	2	JOINT, UNIVERSAL,
8	9831206	1	ROD, ADJUSTMENT,
9	9831207	1	ROD, ADJUSTMENT,
10	9819650	1	LEVER,
11	9831111	2	BUSHING,
12	300480	2	SET SCREW, Hex Soc, M10 x 12, Cup Pt,
13	9831096	1	SHAFT,
14	9831099	1	SHAFT,
15	370002	2	RING, SNAP, M25, Ext,
16	140022	2	WASHER, M24 x 44 x 4,
17	84001390	1	SUPPORT, (18,19)
18	382975	4	SLEEVE,
19	9505633	2	BUSHING,
20	9831106	1	LEVER,
21	9831103	1	LEVER,
22	43129	4	BOLT, Hex, M8 x 40, 8.8,
23	322358	4	WASHER, SPRING, Belleville, M8,
24	9706690	4	NUT, M8, Cl 8,
25	9850721	1	ROD,
26	9850722	1	ROD,
27	9819436	1	BELLOWS,
28	300869	2	PIN, LOCK, M6 x 40, Slotted,

09.002(01) GEARSHIFT CONTROL

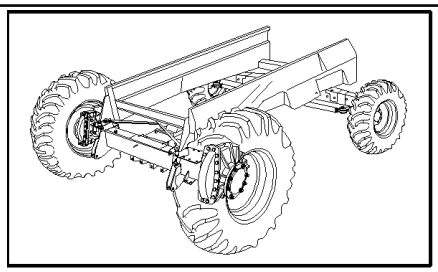

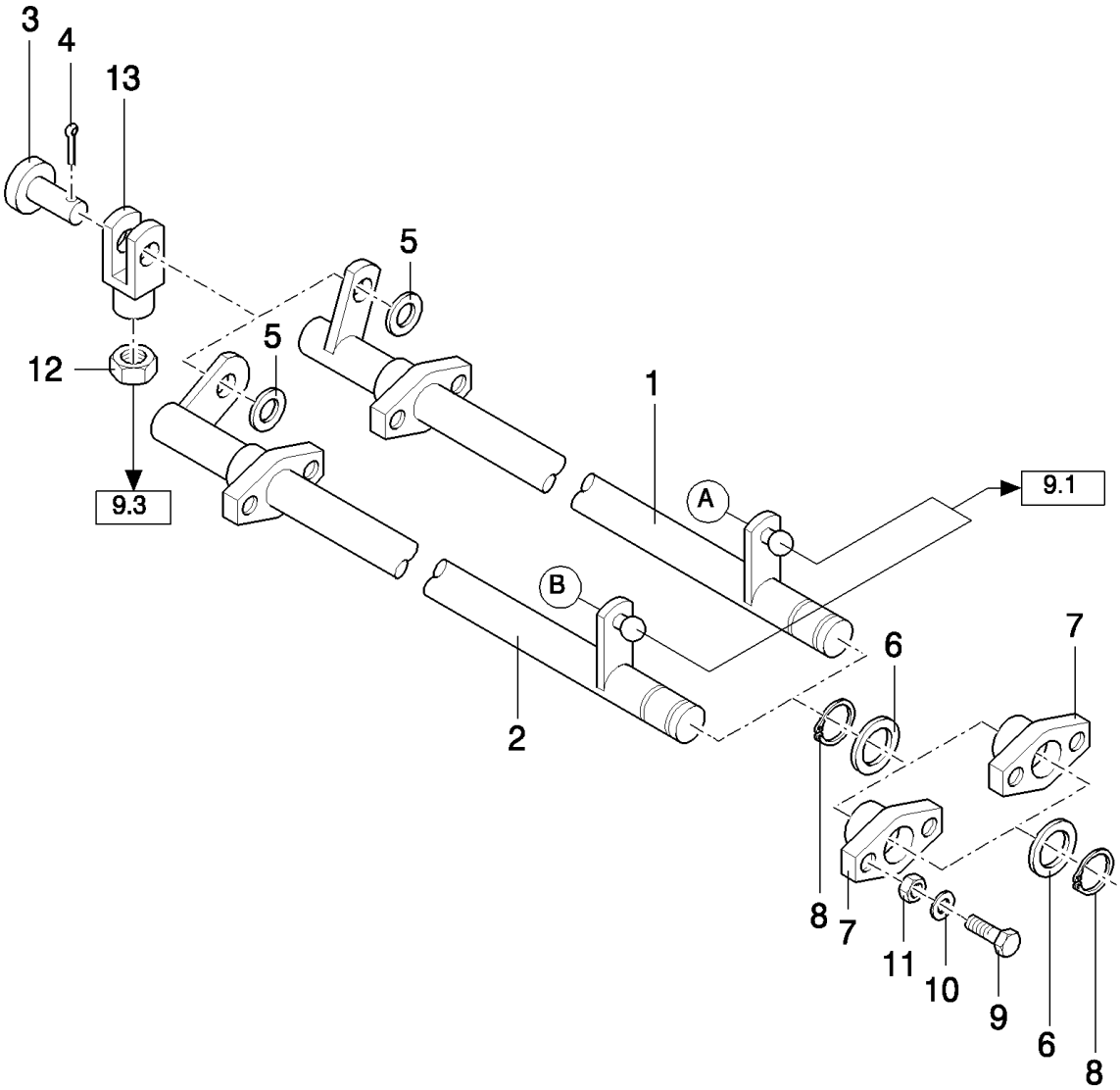

TX68 COMBINE - BASE UNIT

09.002(01) GEARSHIFT CONTROL

ссылка	Номер детали	Кол-во	Описание
1	9850717	1	SHAFT, , FOR TX66-68 ONLY
1	84007777	1	SHAFT, , FOR TX62-63-64-65 ONLY
2	9850719	1	SHAFT, , FOR TX66-68 ONLY
2	84007776	1	SHAFT, , FOR TX62-63-64-65 ONLY
3	322901	2	PIN,
4	130003	2	PIN, SPLIT (COTTER), M3.2 x 20,
5	378244	2	WASHER, M10,
6	66288	4	WASHER,
7	80445727	2	FLANGE,
8	370002	4	RING, SNAP, M25, Ext,
9	43127	8	BOLT, Hex, M8 x 25, 8.8,
10	322358	10	WASHER, SPRING, Belleville, M8,
11	9706690	8	NUT, M8, Cl 8,
12	100016	2	NUT, M10, Cl 8,
13	412417	2	FORK,

09.003(01) GEARSHIFT CONTROL

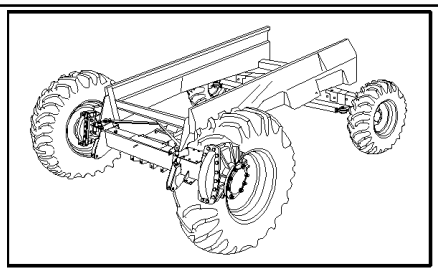

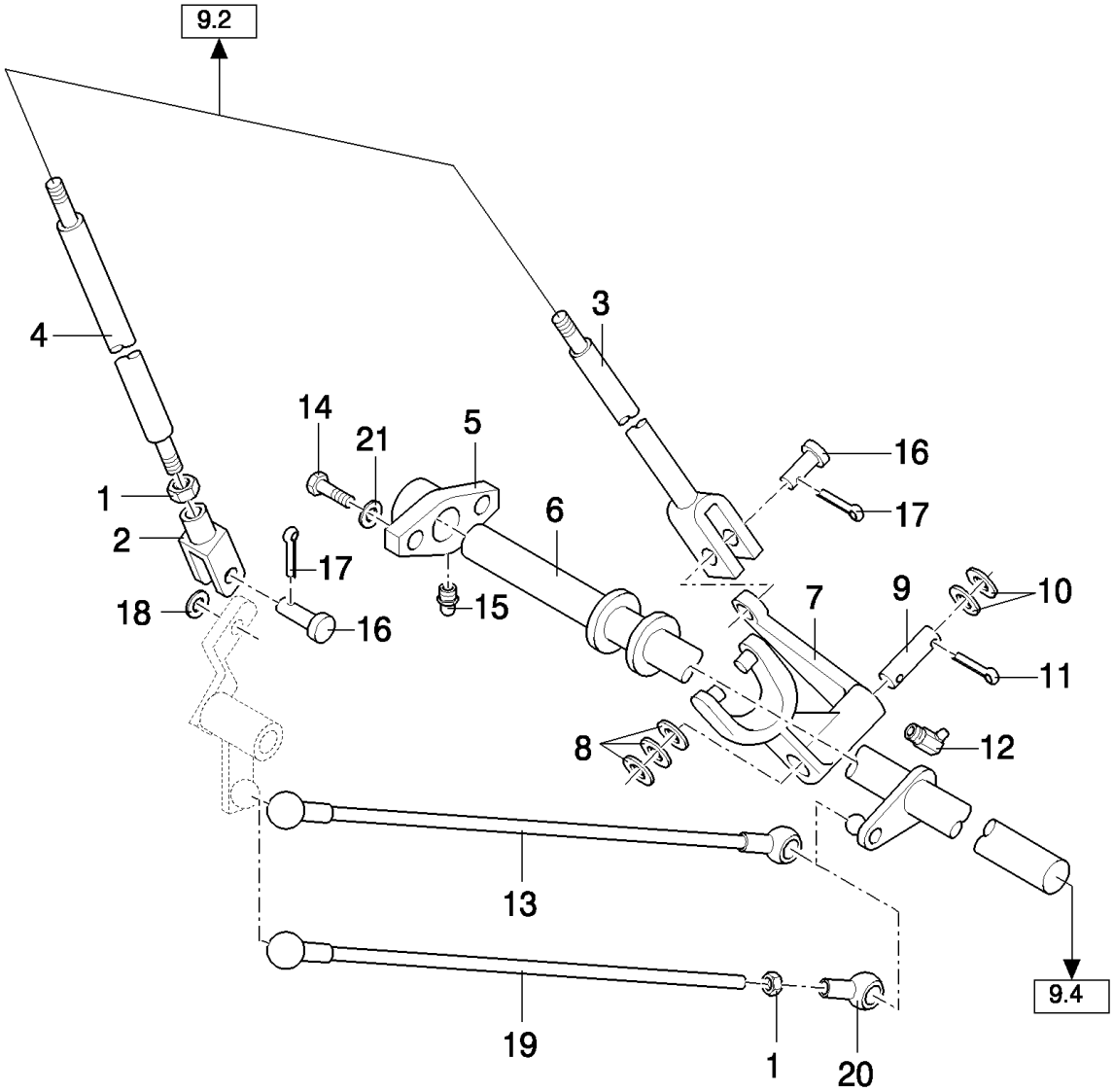

TX68 COMBINE - BASE UNIT

09.003(01) GEARSHIFT CONTROL

ссылка	Номер детали	Кол-во	Описание
1	100016	AR	NUT, M10, Cl 8,
2	412417	1	FORK,
3	9850709	1	ROD,
4	9850707	1	ROD, , FOR SELF-LEVELLING ONLY
4	84007782	1	ROD, , FOR FIXED SHOE ONLY
5	445728	1	FLANGE,
6	9832348	1	SHAFT, , FOR SELF-LEVELLING ONLY, FOR TX66-68 ONLY
6	84017640	1	SHAFT, , FOR TX66-68 ONLY, FOR FIXED SHOE ONLY, D5530-
6	9837344	1	SHAFT, , FOR SELF-LEVELLING ONLY, FOR TX62-63-64-65 ONLY
6	84007783	1	SHAFT, , FOR TX62-63-64-65 ONLY, FOR FIXED SHOE ONLY
7	394145	1	LEVER,
8	443434	AR	WASHER,
9	364433	1	PIN,
10	378247	2	WASHER,
11	130011	2	PIN, SPLIT (COTTER), M5 x 40,
12	321204	AR	NIPPLE, LUBE, M6 x 1, 16mm lg, , FOR SELF-LEVELLING ONLY
12	323787	AR	NIPPLE, LUBE, , FOR FIXED SHOE ONLY
13	9508679	1	ROD, , FOR SELF-LEVELLING ONLY
14	43129	2	BOLT, Hex, M8 x 40, 8.8,
15	323713	1	NIPPLE, LUBE,
16	322901	2	PIN,
17	130003	2	PIN, SPLIT (COTTER), M3.2 x 20,
18	378244	1	WASHER, M10,
19	9508678	1	ROD, , FOR FIXED SHOE ONLY
20	412470	1	HINGE, , FOR FIXED SHOE ONLY
21	322358	2	WASHER, SPRING, Belleville, M8,

09.004(01) GEARBOX

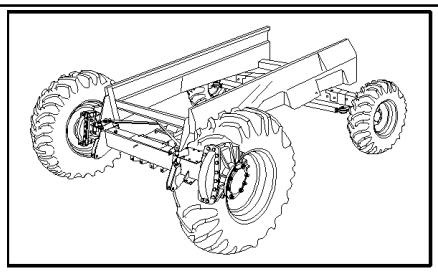

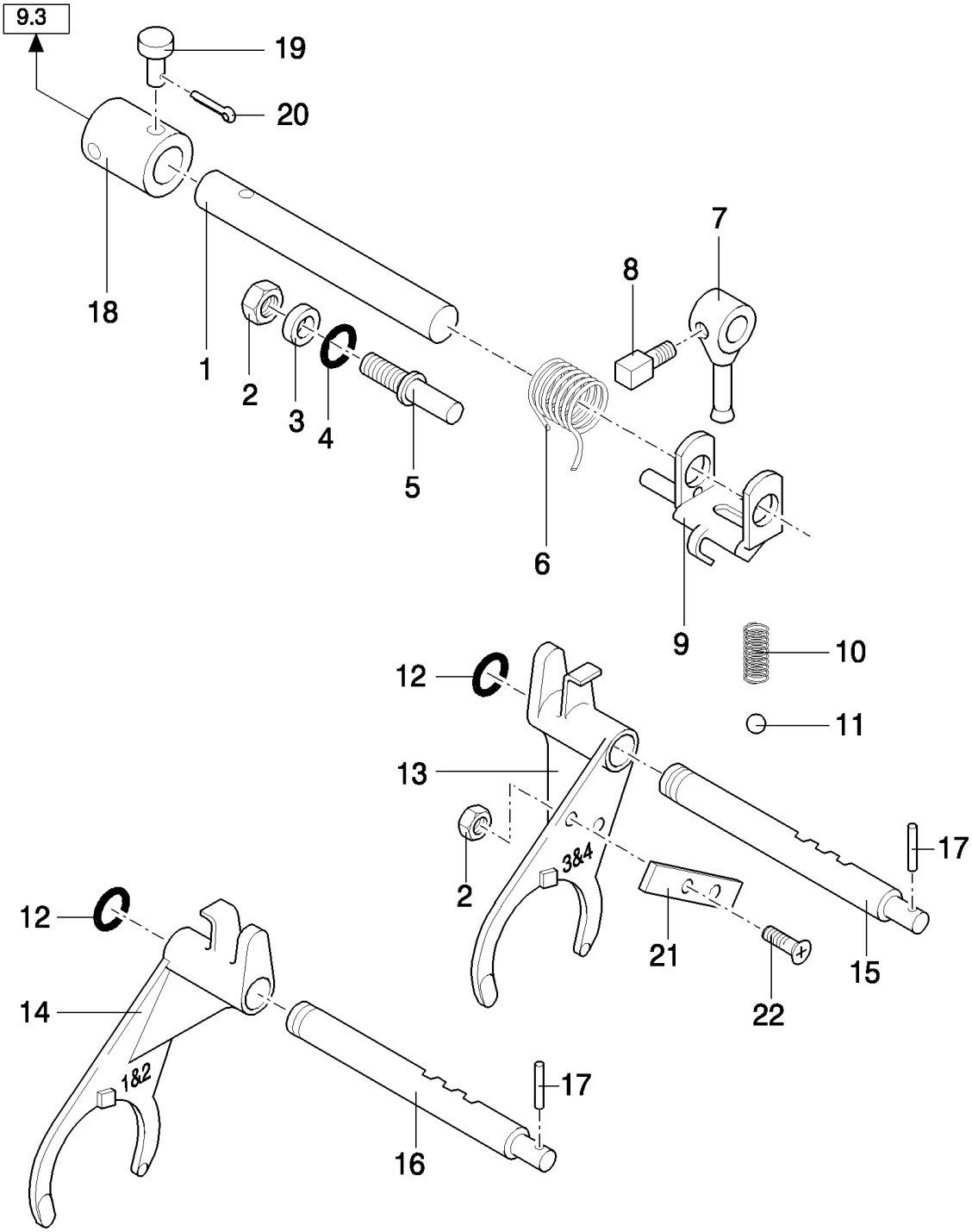

TX68 COMBINE - BASE UNIT

09.004(01) GEARBOX

ссылка	Номер детали	Кол-во	Описание
1	9814644	1	SHAFT,
2	86629542	1	NUT, LOCK, M8 x 1.25, Cl 8,
3	9812123	1	RING,
4	220085	1	O-RING,
5	84004167	1	PIN,
6	84005379	1	SPRING,
7	9831136	1	LEVER,
8	84814899	1	SET SCREW, Hex Soc, M10 x 18,
9	9831133	1	HINGE,
10	9833067	2	SPRING,
11	210006	2	BALL,
12	129979	2	O-RING, -115, 70 Duro, .674" ID x .103" Thk,
13	421478	1	FORK, , -C5510
13	84031890	1	YOKE, , D5510-
14	421477	1	FORK,
15	440784	1	SHAFT,
16	436422	1	SHAFT,
17	300872	2	PIN, LOCK, M8 x 36, Slotted,
18	9832366	1	BUSHING,
19	353216	2	PIN, CLEVIS, M8 x 45,
20	9512667	2	PIN, SPLIT (COTTER), M2 x 20,
21	84334380	1	BRACKET,
22	308761	2	BOLT, CARRIAGE, Short NK, M8 x 25, Cl8.8, Full Thd,

09.005(01) GEARBOX

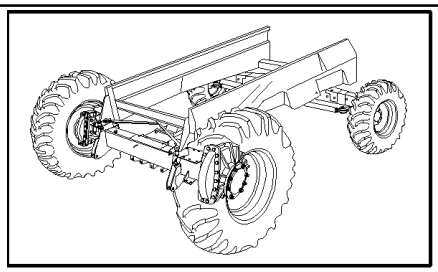

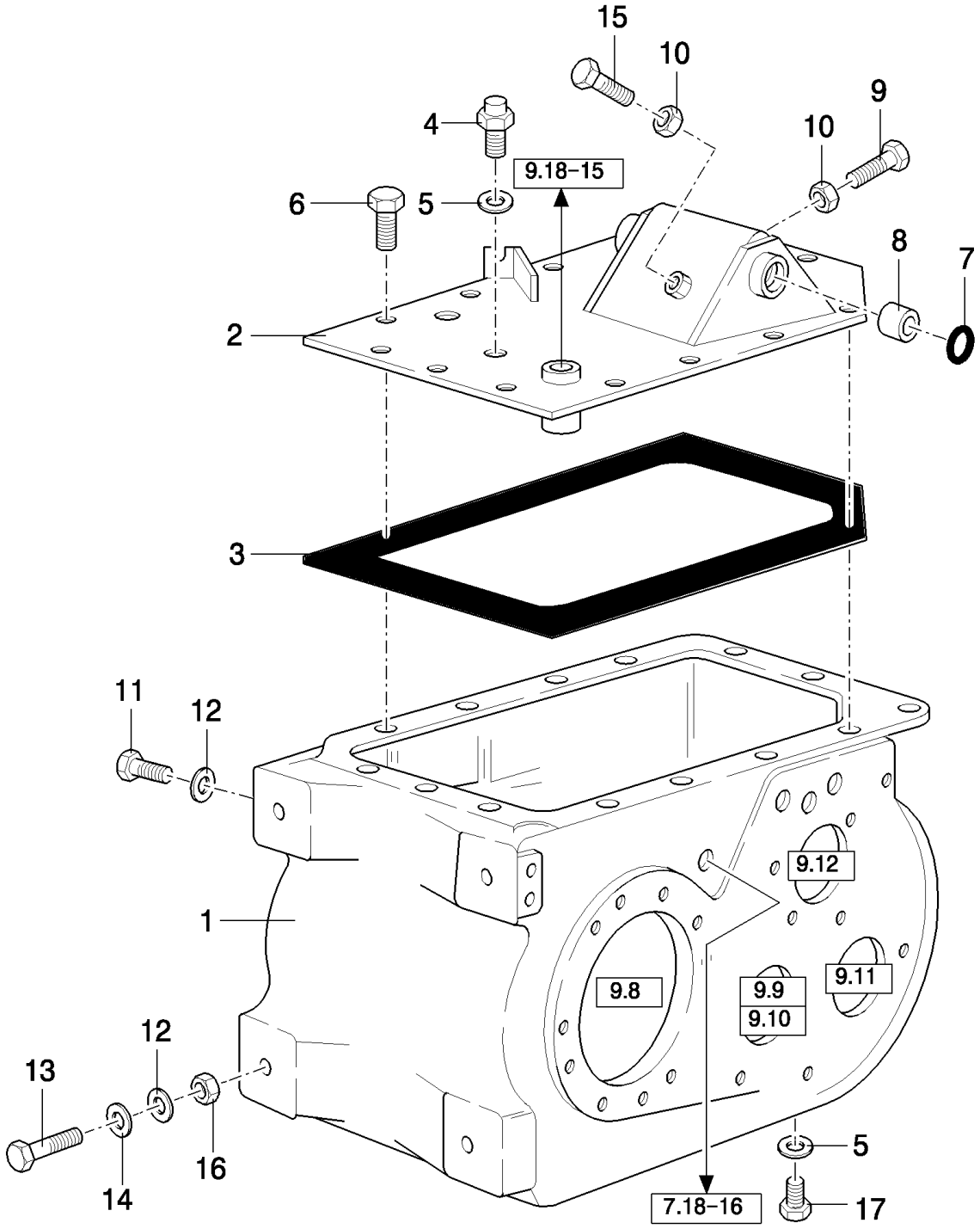

TX68 COMBINE - BASE UNIT

09.005(01) GEARBOX

ссылка	Номер детали	Кол-во	Описание
1	84031891	1	HOUSING,
2	9835224	1	COVER, , WITH DIFF. LOCK
2	9837346	1	COVER, , STANDARD
3	430783	1	GASKET,
4	398136	1	BREATHER,
5	220025	2	SEALRING,
6	412621	13	BOLT, Hex Lock, M10 x 30, 8.8, M10x30
7	27286	2	O-RING,
8	382975	4	SLEEVE,
9	120112	2	BOLT, Hex, M10 x 40, 8.8, Full Thd,
10	100016	2	NUT, M10, Cl 8,
11	120090	4	SCREW, Hex, M16 x 50, 8.8,
12	394631	6	WASHER, 16MM
13	455447	2	BOLT,
14	455446	2	WASHER,
15	120115	1	SCREW, Hex, M10 x 70, 8.8, Full Thd,
16	100020	2	NUT, M16, Cl 8,
17	336897	1	PLUG,

09.006(01) GEARBOX, STUDS

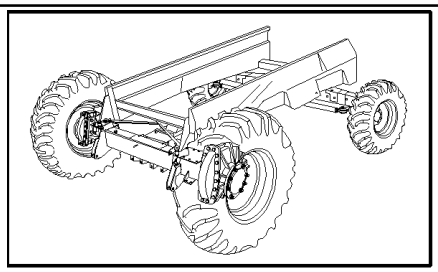

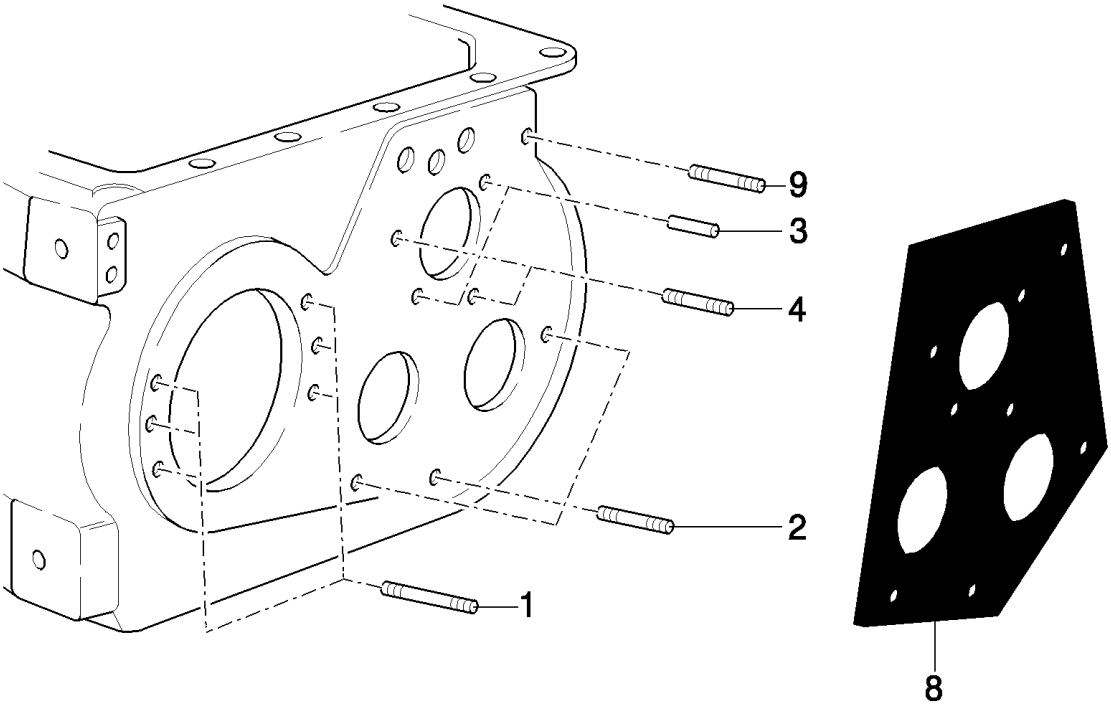

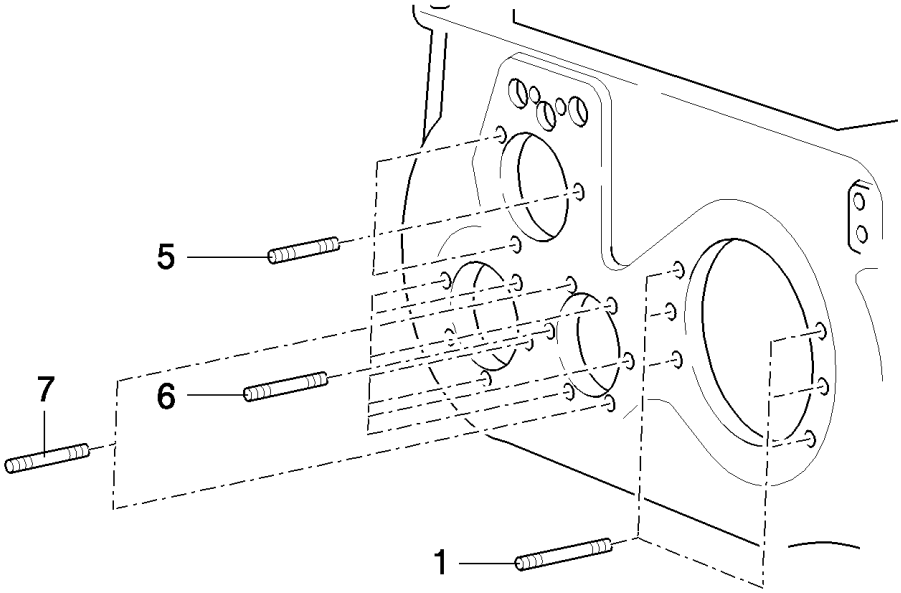

TX68 COMBINE - BASE UNIT

09.006(01) GEARBOX, STUDS

ссылка	Номер детали	Кол-во	Описание
1	9817207	12	STUD,
2	321665	3	STUD,
3	322423	2	PIN,
4	336270	2	STUD,
5	110019	3	STUD,
6	110020	11	STUD,
7	300482	2	SET SCREW, Hex Soc, M10 x 20, Cone Pt,
8	456162	1	GASKET,
9	321665	1	STUD, , FOR TX62-63-64-65-66-68 ONLY
9	350341	1	STUD, , FOR TX67 ONLY

09.007(01) DIFFERENTIAL

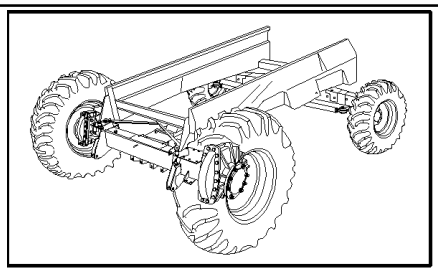

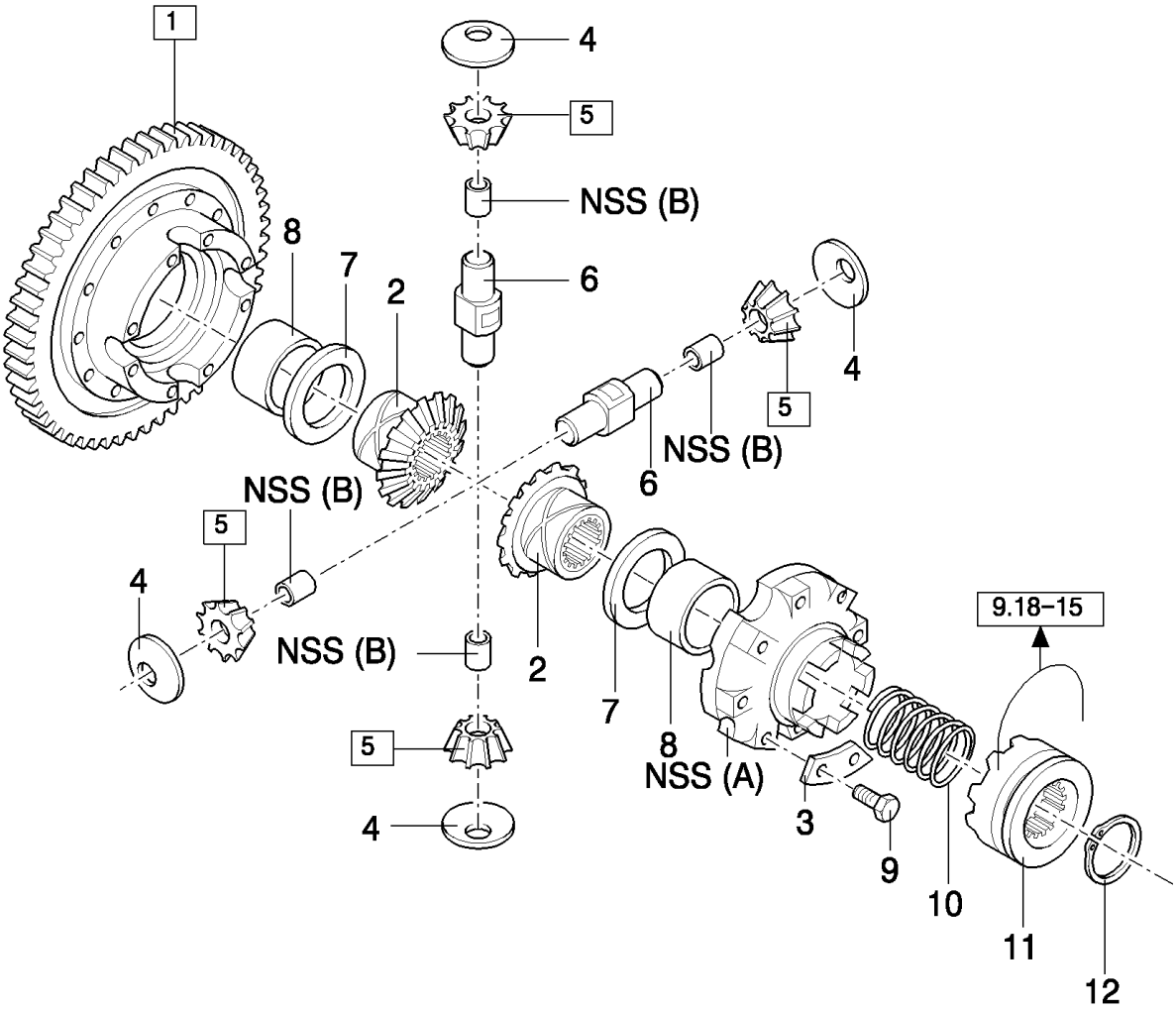

TX68 COMBINE - BASE UNIT

09.007(01) DIFFERENTIAL

ссылка	Номер детали	Кол-во	Описание
1	9850393	1	DIFFERENTIAL, Z:50 (2 to 9,A), WITH DIFF. LOCK, FOR TX65-67-68 ONLY
1	9850393	1	DIFFERENTIAL, Z:50 (2 to 9,A), WITH DIFF. LOCK, FOR TX64-66 ONLY, -C1032
1	9850392	1	DIFFERENTIAL, Z:50 (2 to 9,A), STANDARD, FOR TX65-67-68 ONLY
1	9850392	1	DIFFERENTIAL, Z:50 (2 to 9,A), STANDARD, FOR TX64-66 ONLY, -C1032
1	80455176	1	DIFFERENTIAL, Z:52 (2 to 9,A), FOR TX62 ONLY, WITH DIFF. LOCK, -C1032
1	84043281	1	DIFFERENTIAL, Z:52 (2 to 9,A), WITH DIFF. LOCK, FOR TX62-63-64 ONLY, D1033-
1	84043281	1	DIFFERENTIAL, Z:52 (2 to 9,A), FOR TX66 ONLY, WITH DIFF. LOCK, -C1076
1	9850393	1	DIFFERENTIAL, Z:50 (2 to 9,A), WITH DIFF. LOCK, FOR TX66 ONLY, D1077-
1	437777	1	DIFFERENTIAL, Z:52 (2 to 9,A), FOR TX62 ONLY, STANDARD, -C1032
1	84043282	1	DIFFERENTIAL, Z:52 (2 to 9,A), STANDARD, FOR TX62-63-64 ONLY, D1033-
1	84043282	1	DIFFERENTIAL, Z:52 (2 to 9,A), FOR TX66 ONLY, STANDARD, -C1076
1	9850392	1	DIFFERENTIAL, Z:50 (2 to 9,A), STANDARD, FOR TX66 ONLY, D1077-
2	9514042	2	SPROCKET, DRIVEN, , FOR TX64-65-66-68 ONLY, FOR REF.1 WITH Z:50
2	9514631	2	GEAR, PLANETARY, , FOR TX62-64-66 ONLY, FOR REF.1 WITH Z:52, -C1032
2	9514042	2	SPROCKET, DRIVEN, , FOR REF.1 WITH Z:52, FOR TX62-63-64-66 ONLY, D1033-
3	331649	4	PLATE, LOCKING,
4	210014	4	WASHER,
5	9850394	4	GEAR, (B), FOR REF.1 WITH Z:50, FOR TX64-65-66-68 ONLY
5	9514632	4	SUN GEAR, (B), FOR TX62-64-66 ONLY, FOR REF.1 WITH Z:52, -C1032
5	9850394	4	GEAR, (B), FOR REF.1 WITH Z:52, FOR TX62-63-64-66 ONLY, D1033-
6	9514041	2	SHAFT, , FOR REF.1 WITH Z:50, FOR TX64-65-66-68 ONLY
6	410007	2	SHAFT, , FOR TX62-64-66 ONLY, FOR REF.1 WITH Z:52, -C1032
6	9514041	2	SHAFT, , FOR REF.1 WITH Z:52, FOR TX62-63-64-66 ONLY, D1033-
7	210013	2	WASHER, THRUST,
8	9514039	2	SLEEVE, , FOR TX64-65-66-68 ONLY
9	120073	8	BOLT, Hex, M10 x 80, 8.8,
10	455097	1	SPRING, , WITH DIFF. LOCK
11	455094	1	RING, COUPLING, , WITH DIFF. LOCK
12	327911	1	CIRCLIP, , WITH DIFF. LOCK

09.008(01) BRAKE DISCS

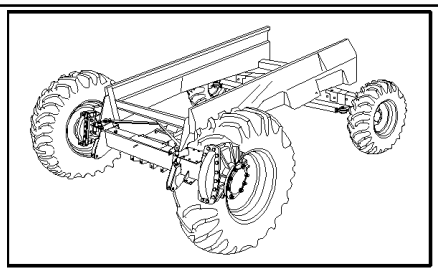

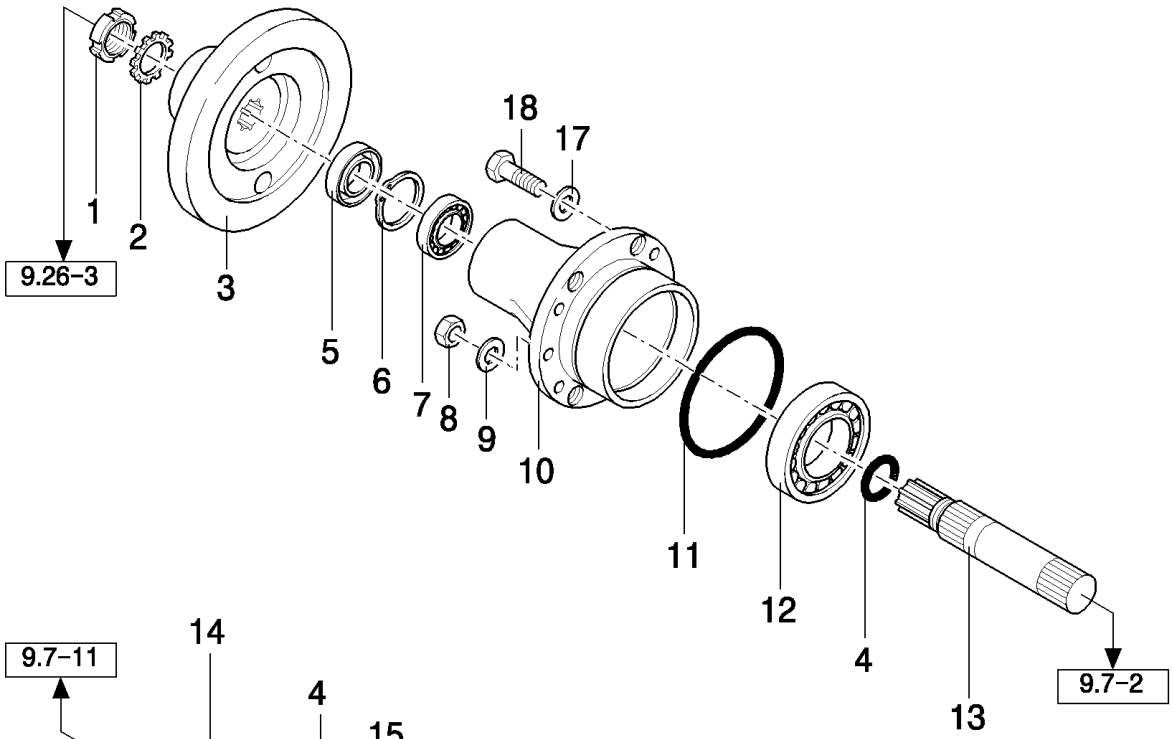

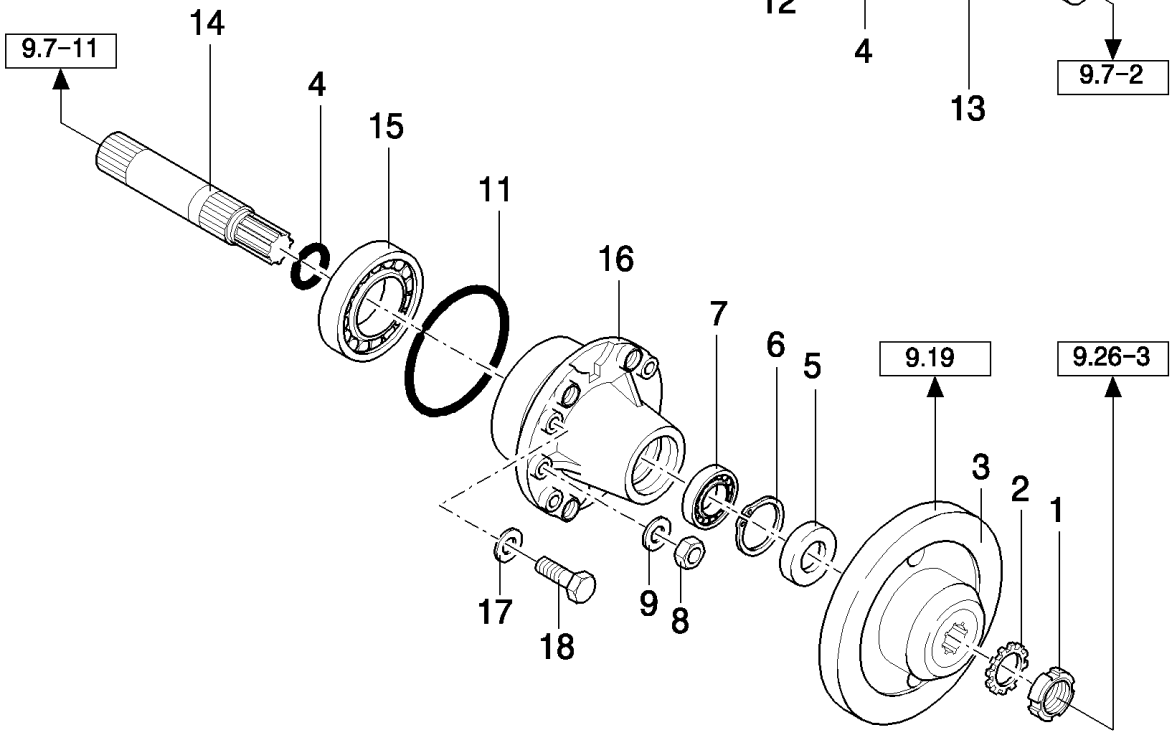

TX68 COMBINE - BASE UNIT

09.008(01) BRAKE DISCS

ссылка	Номер детали	Кол-во	Описание
1	9513020	2	NUT,
2	382867	3	WASHER, LOCK,
3	9819433	2	BRAKE DISC, , BSN C315
3	84807250	2	BRAKE DISC, , ASN D316
4	510120	2	O-RING, -224, 70 Duro, 1.734" ID x .139" Thk,
5	84017986	2	SEALRING,
6	80300633	2	RING, SNAP,
7	9814102	2	BEARING ASSY,
8	337475	12	NUT, M12, Cl 10,
9	140046	12	WASHER, Belleville, M12,
10	9819544	1	FLANGE, RH
11	9815655	2	O-RING,
12	210046	1	BEARING, BALL,
13	9819514	1	SHAFT, RH
14	89815650	1	SHAFT, LH, DIFF. WITH LOCK
14	9831951	1	SHAFT, LH, DIFF. STANDARD
15	418831	1	BEARING ASSY, , DIFF. WITH LOCK
15	321951	1	BEARING ASSY, , DIFF. STANDARD
16	89819448	1	FLANGE, LH, DIFF. WITH LOCK
16	9819534	1	FLANGE, LH, DIFF. STANDARD
17	322358	4	WASHER, SPRING, Belleville, M8,
18	80300380	4	SCREW, M8x10

09.009(01) GEARS

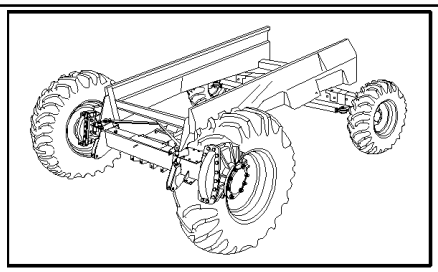

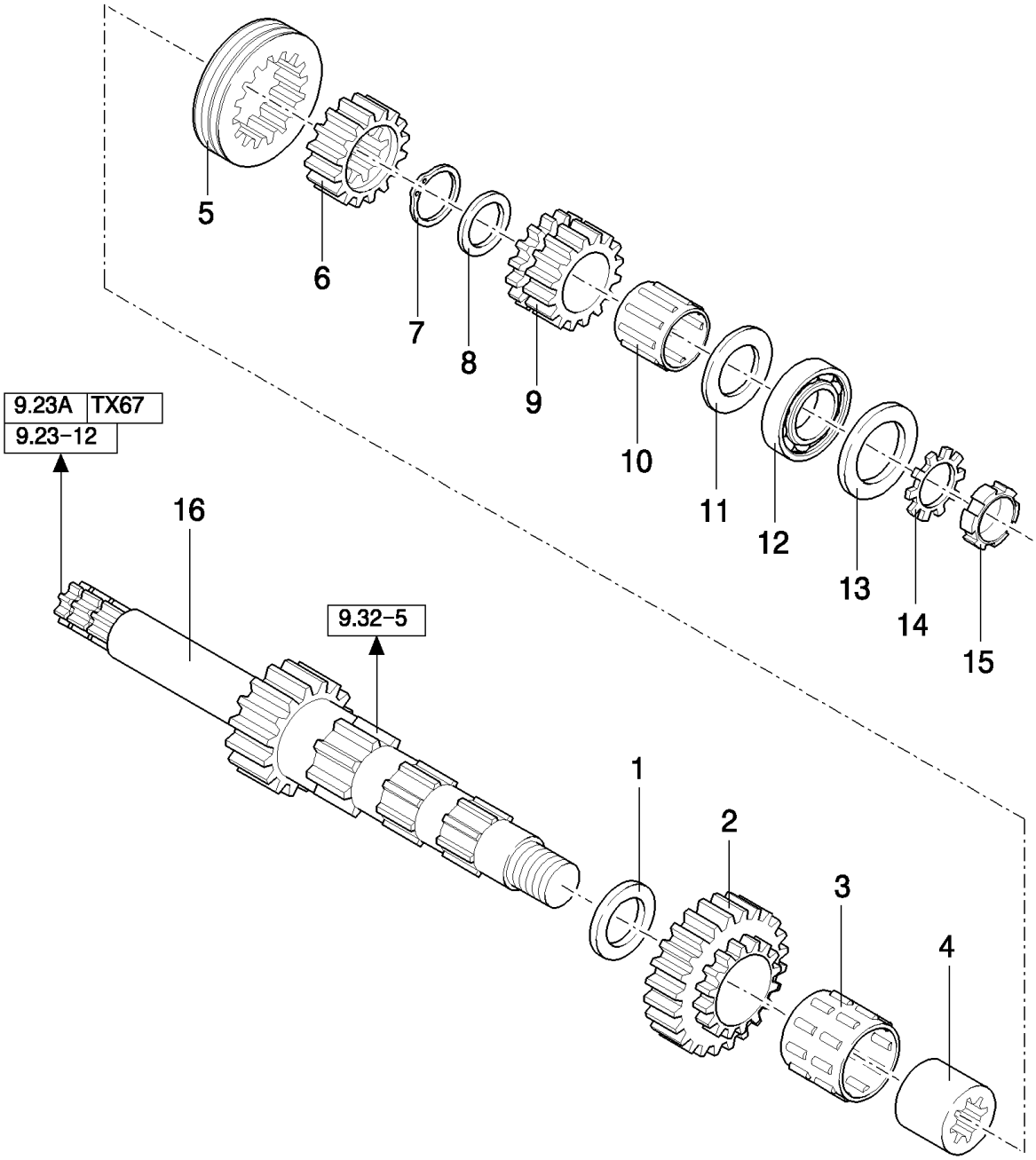

TX68 COMBINE - BASE UNIT

09.009(01) GEARS

ссылка	Номер детали	Кол-во	Описание
1	396117	1	WASHER,
2	9837150	1	GEAR, , FOR TX62-63-64-65-66-68 ONLY
2	84032728	1	GEAR, , FOR TX67 ONLY
3	396135	1	BEARING ASSY,
4	394028	1	BUSHING,
5	9837152	1	SYNCHRONIZER, , FOR TX62-63-64-65-66-68 ONLY
5	84032663	1	SYNCHRONIZER, , FOR TX67 ONLY
6	396116	1	COUPLING, SPLINED, , FOR TX62-63-64-65-66-68 ONLY
6	84032662	1	GEAR, , FOR TX67 ONLY
7	234569	1	RING, SNAP, #187, Ext, #187, Ext
8	381827	1	WASHER,
9	9837151	1	GEAR, , FOR TX62-63-64-65-66-68 ONLY
9	84032729	1	GEAR, , FOR TX67 ONLY
10	394027	1	BEARING ASSY,
11	381826	1	WASHER,
12	456331	1	BEARING ASSY,
13	412608	AR	SHIM, 0.2mm Thk,
13	412609	AR	SHIM, 0.5mm Thk,
14	412352	1	PLATE, LOCKING,
15	412351	1	NUT,
16	9819513	1	SHAFT, Z:11, FOR TX64-65-66-68 ONLY
16	89819512	1	SHAFT, Z:10, FOR TX62-63-64-66 ONLY
16	84041117	1	SHAFT, Z:11, FOR TX67 ONLY

09.010(01) GEARS

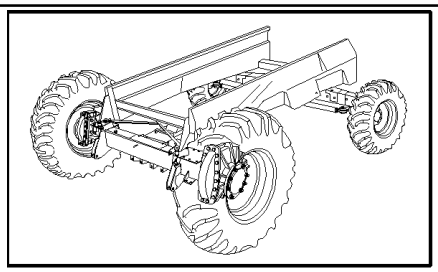

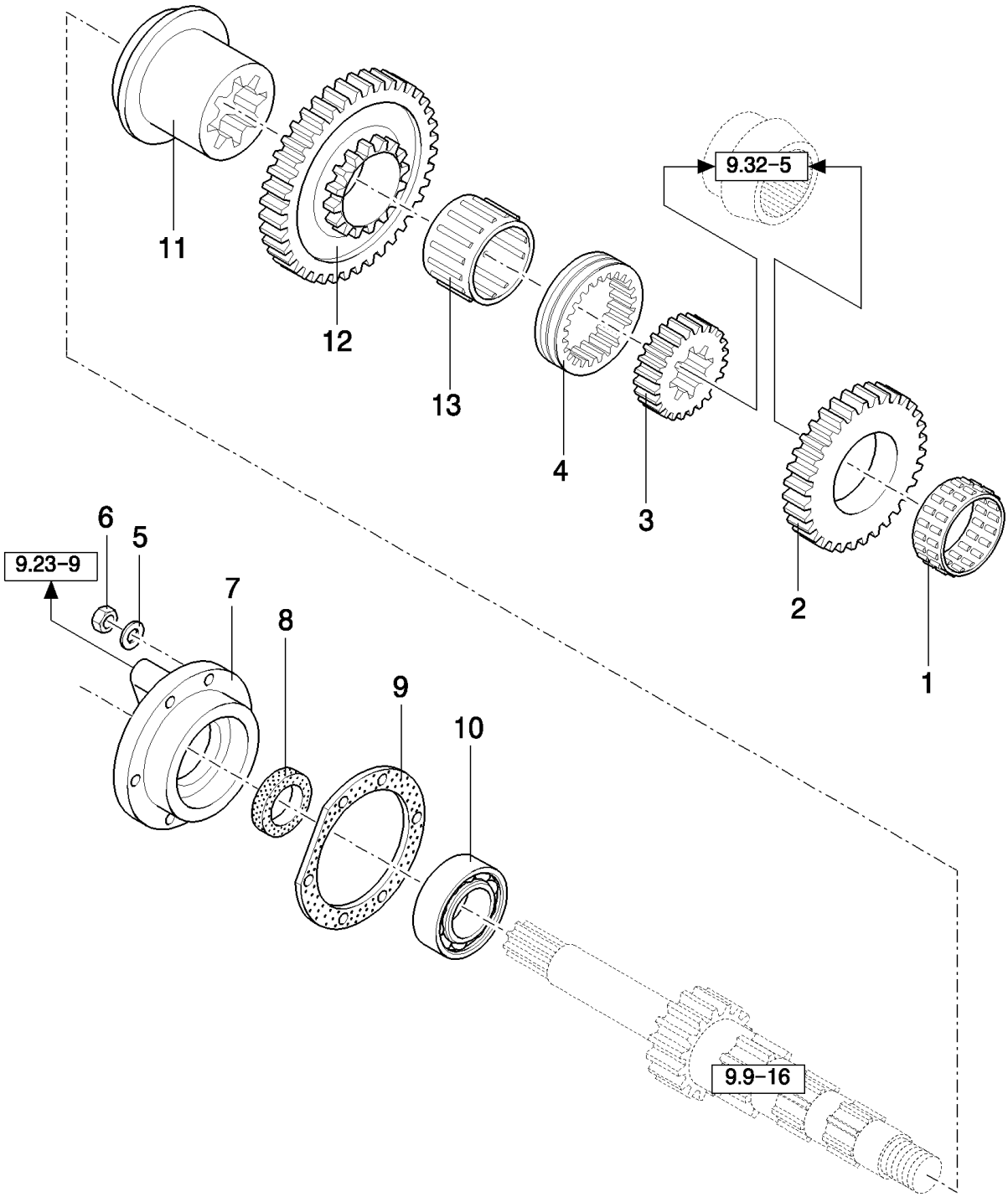

TX68 COMBINE - BASE UNIT

09.010(01) GEARS

ссылка	Номер детали	Кол-во	Описание
1	396136	1	BEARING, NEEDLE,
2	9837149	1	GEAR, , FOR TX62-63-64-65-66-68 ONLY
2	84032727	1	GEAR, , FOR TX67 ONLY
3	396120	1	GEAR, , FOR TX62-63-64-65-66-68 ONLY
3	84032660	1	GEAR, , FOR TX67 ONLY
4	9837153	1	SYNCHRONIZER, , FOR TX62-63-64-65-66-68 ONLY
4	84032661	1	SYNCHRONIZER, , FOR TX67 ONLY
5	140045	6	WASHER, SPRING, Belleville, M10,
6	100016	6	NUT, M10, Cl 8,
7	9819648	1	FLANGE, , FOR TX62-63-64-65-66-68 ONLY
7	84038144	1	HOUSING, BEARING, , FOR TX67 ONLY
8	388116	1	SEAL,
9	9819906	1	GASKET,
10	322365	1	BEARING ASSY,
11	396121	1	COUPLING, SPLINED,
12	9837148	1	GEAR, , FOR TX62-63-64-65-66-68 ONLY
12	84032726	1	GEAR, , FOR TX67 ONLY
13	396137	1	BEARING ASSY,

09.011(01) GEARS

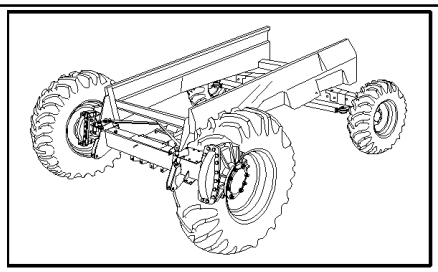

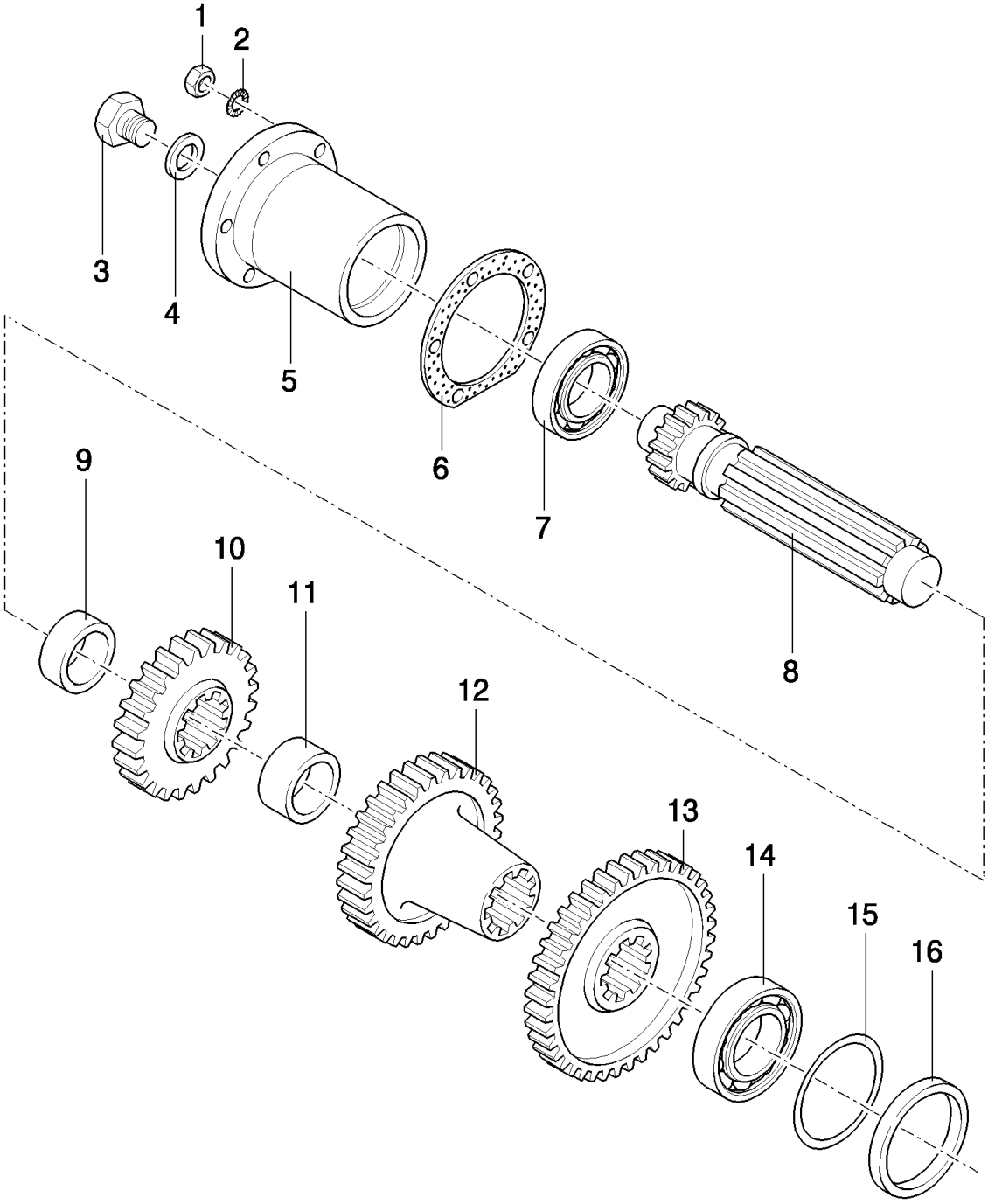

TX68 COMBINE - BASE UNIT

09.011(01) GEARS

ссылка	Номер детали	Кол-во	Описание
1	100016	5	NUT, M10, Cl 8,
2	140045	5	WASHER, SPRING, Belleville, M10,
3	150006	1	PLUG,
4	220025	1	SEALRING,
5	430661	1	FLANGE, , FOR TX62-63-64-65-66-68 ONLY
5	84041138	1	FLANGE, , FOR TX67 ONLY
6	394468	1	GASKET,
7	423273	1	BEARING, ROLLER,
8	384259	1	SHAFT,
9	394361	1	BUSHING,
10	430513	1	GEAR,
11	394359	1	BUSHING,
12	430517	1	GEAR,
13	384262	1	GEAR,
14	423362	1	BEARING ASSY,
15	412192	AR	SHIM,
16	430964	1	BUSHING,

09.012(01) GEARS

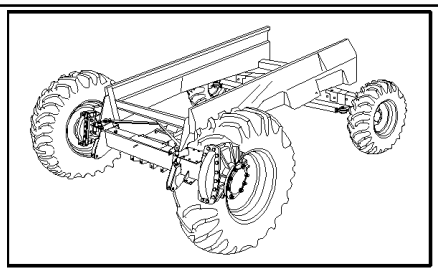

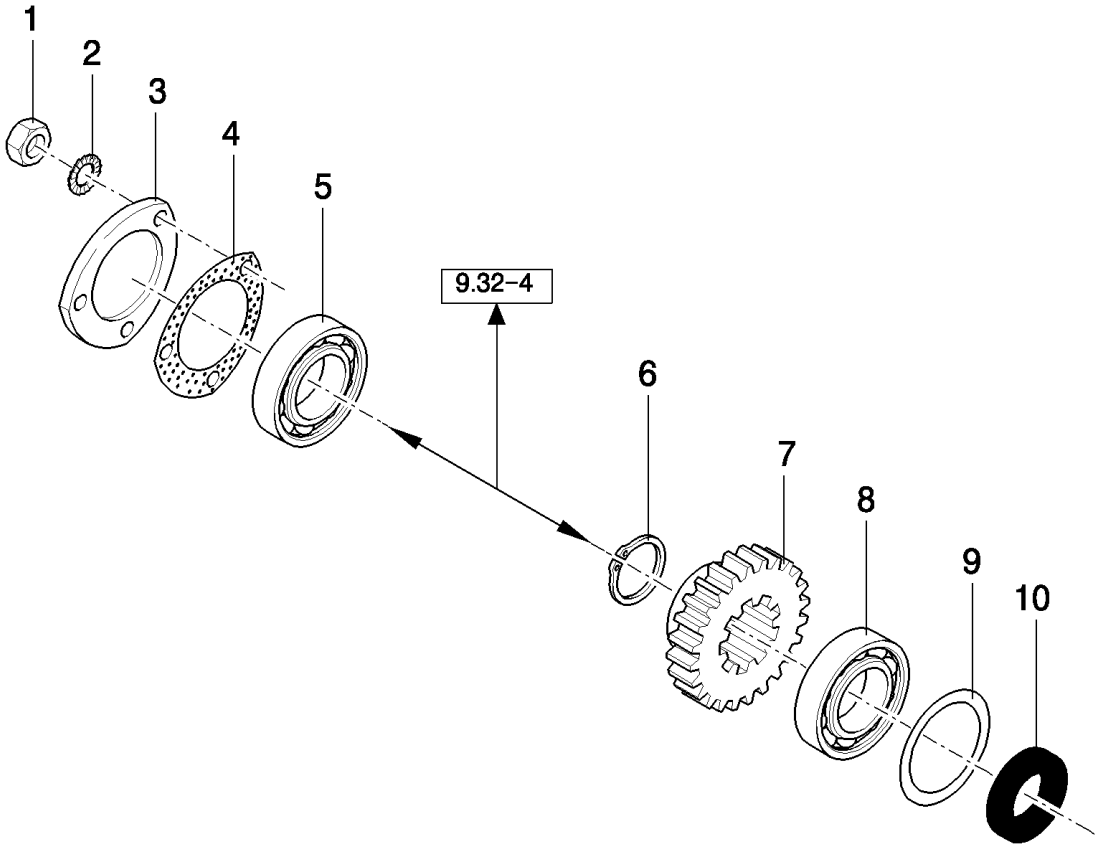

TX68 COMBINE - BASE UNIT

09.012(01) GEARS

ссылка	Номер детали	Кол-во	Описание
1	100016	3	NUT, M10, Cl 8,
2	140045	3	WASHER, SPRING, Belleville, M10,
3	381934	1	FLANGE, , FOR TX62-63-64-65-66-68 ONLY
3	84041140	1	FLANGE, , FOR TX67 ONLY
4	382225	1	GASKET,
5	210048	1	BEARING, BALL,
6	234569	1	RING, SNAP, #187, Ext, #187, Ext
7	395963	1	GEAR,
8	42543	1	BEARING, BALL,
9	412192	AR	SHIM,
10	388116	1	SEAL,

09.015(01) END REDUCTION 11/111

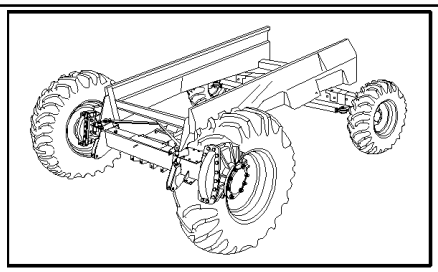

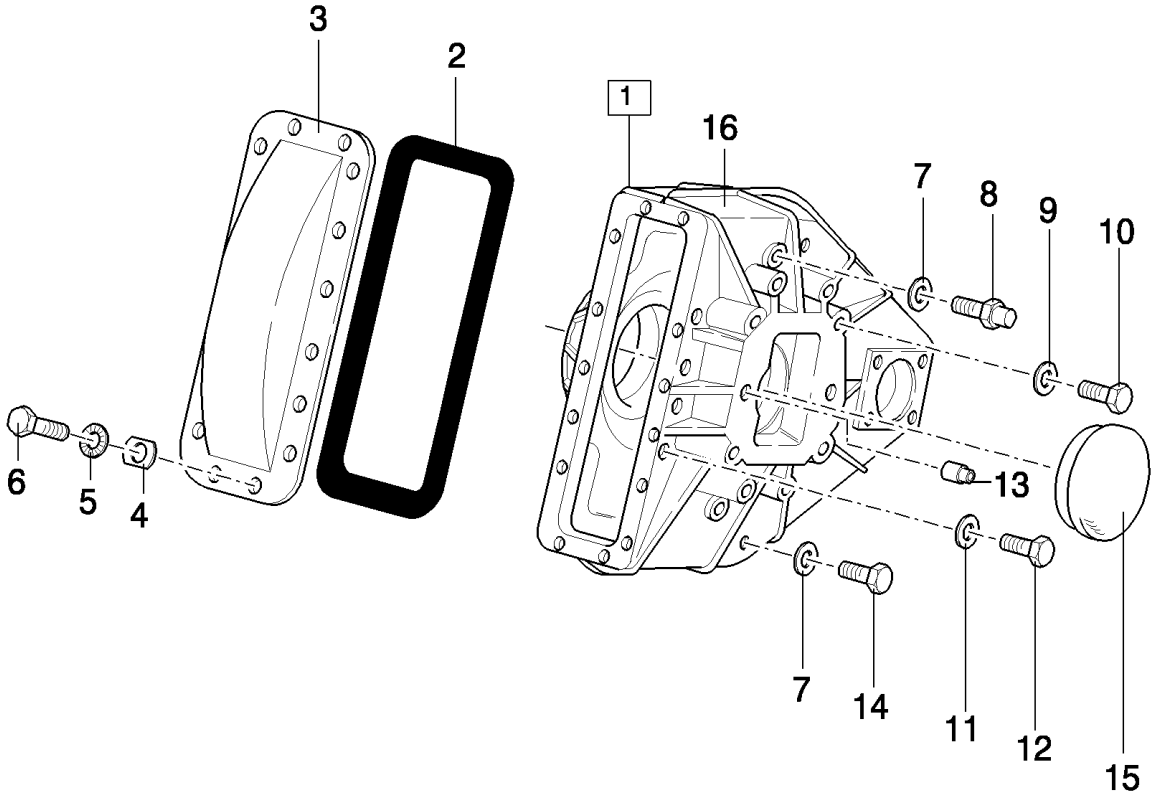

ONLY VALID FROM --1077001 (TX66)

TX68 COMBINE - BASE UNIT

09.015(01) END REDUCTION 11/111

ссылка	Номер детали	Кол-во	Описание
1	84023224	2	GEAR REDUCTION UNIT, (2 to 16,9.16), STANDARD
1	84023225	2	GEAR REDUCTION UNIT, (2 to 16,9.16), FOR MUDDY CONDITIONS
2	913369	2	GASKET,
3	913906	2	COVER,
4	743794	36	WASHER,
5	140045	32	WASHER, SPRING, Belleville, M10,
6	43138	32	SCREW, Hex, M10 x 20, 8.8, Full Thd,
7	220025	4	SEALRING,
8	386287	2	BREATHER,
9	9850384	16	WASHER,
10	280487	16	BOLT, Hex, 7/8"-9 x 2 1/4", G8,
11	722441	8	GASKET,
12	412413	8	PLUG,
13	626826	4	PIN,
14	336897	2	PLUG,
15	613201	2	COVER,
16	9512481	2	HOUSING, , -C6670
16	84023220	2	HOUSING, , D6670-

ONLY VALID FROM --1077001 (TX66)

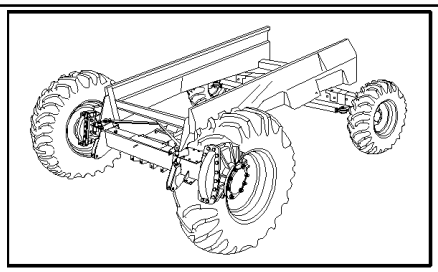

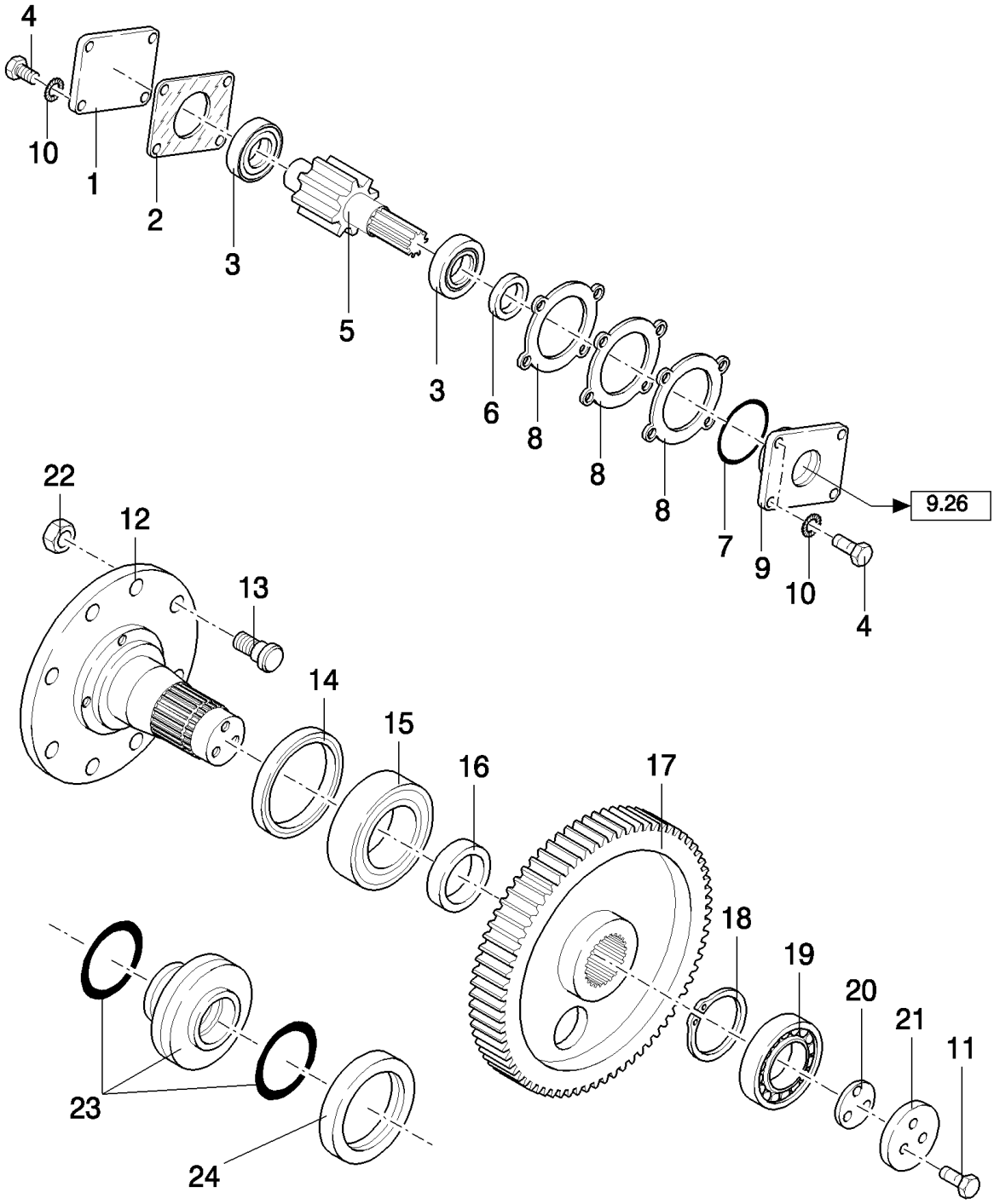

ONLY VALID FROM --1077001 (TX66)

TX68 COMBINE - BASE UNIT

09.016(01) END REDUCTION 11/111

ссылка	Номер детали	Кол-во	Описание
1	613212	2	FLANGE,
2	410920	2	SEAL,
3	754567	4	BEARING, ROLLER, TAPERED,
4	43140	16	BOLT, Hex, M10 x 30, 8.8, Full Thd,
5	751030	2	SHAFT,
6	66807	2	SEAL,
7	913107	2	O-RING, -235, 70 Duro, 3.109" ID x .139" Thk,
8	382948	AR	SHIM, 0.05mm Thk,
8	382949	AR	SHIM, THK.:0.2MM
8	382950	AR	SHIM, 0.5mm Thk,
9	754516	2	FLANGE,
10	140045	16	WASHER, SPRING, Belleville, M10,
11	398885	6	SCREW,
12	9510173	2	FLANGE, , -C6670
12	84023222	2	FLANGE, , STANDARD, D6670-
12	84023223	2	FLANGE, , FOR MUDDY CONDITIONS, D6670-
13	330291	20	BOLT,
14	613202	2	SEAL, , STANDARD, -C6670
14	9832264	2	SEAL, , STANDARD, D6670-
14	89818670	2	RING, , FOR MUDDY CONDITIONS
15	754566	2	BEARING ASSY,
16	80763128	2	RING,
17	751029	2	GEAR,
18	613200	2	SPACER,
19	754565	2	BEARING, ROLLER, TAPERED,
20	395391	AR	SHIM, 0.05mm Thk,
20	395392	AR	SHIM, 0.2mm Thk,
20	395393	AR	SHIM, 0.5mm Thk,
21	382503	2	FLANGE,
22	748961	20	NUT,
23	89509555	2	KIT, , FOR MUDDY CONDITIONS
24	89818670	2	RING, , FOR MUDDY CONDITIONS

ONLY VALID FROM --1077001 (TX66)

09.017(01) DIFFERENTIAL LOCK CONTROL

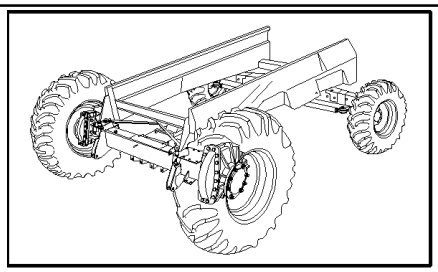

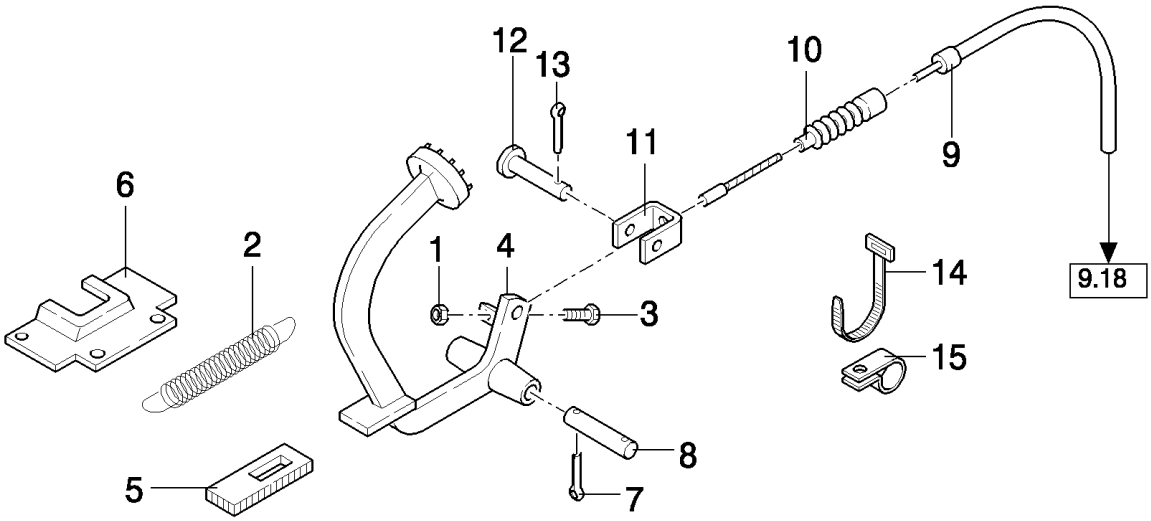

TX68 COMBINE - BASE UNIT

09.017(01) DIFFERENTIAL LOCK CONTROL

ссылка	Номер детали	Кол-во	Описание
1	9706690	1	NUT, M8, Cl 8,
2	9811656	1	SPRING,
3	43128	1	BOLT, Hex, M8 x 30, 8.8,
4	89839669	1	PEDAL,
5	89839853	1	ELEMENT, SEALING,
6	9819825	1	COVER,
7	412685	2	PIN, SPLIT (COTTER), M4 x 32,
8	80390066	1	PIN,
9	9503174	1	CABLE,
10	427705	1	COVER,
11	388340	1	YOKE,
12	376876	1	PIN, CLEVIS, M6 x 30,
13	300399	1	PIN, SPLIT (COTTER),
14	323597	3	STRAP, CABLE, M9 x 165 or M5 x 197,
15	335021	2	CLAMP,

09.018(01) DIFFERENTIAL LOCK CONTROL

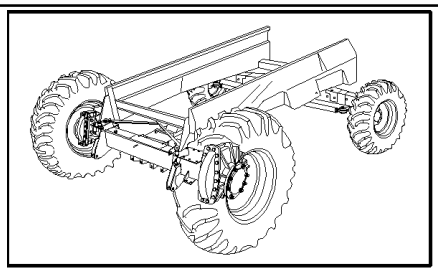

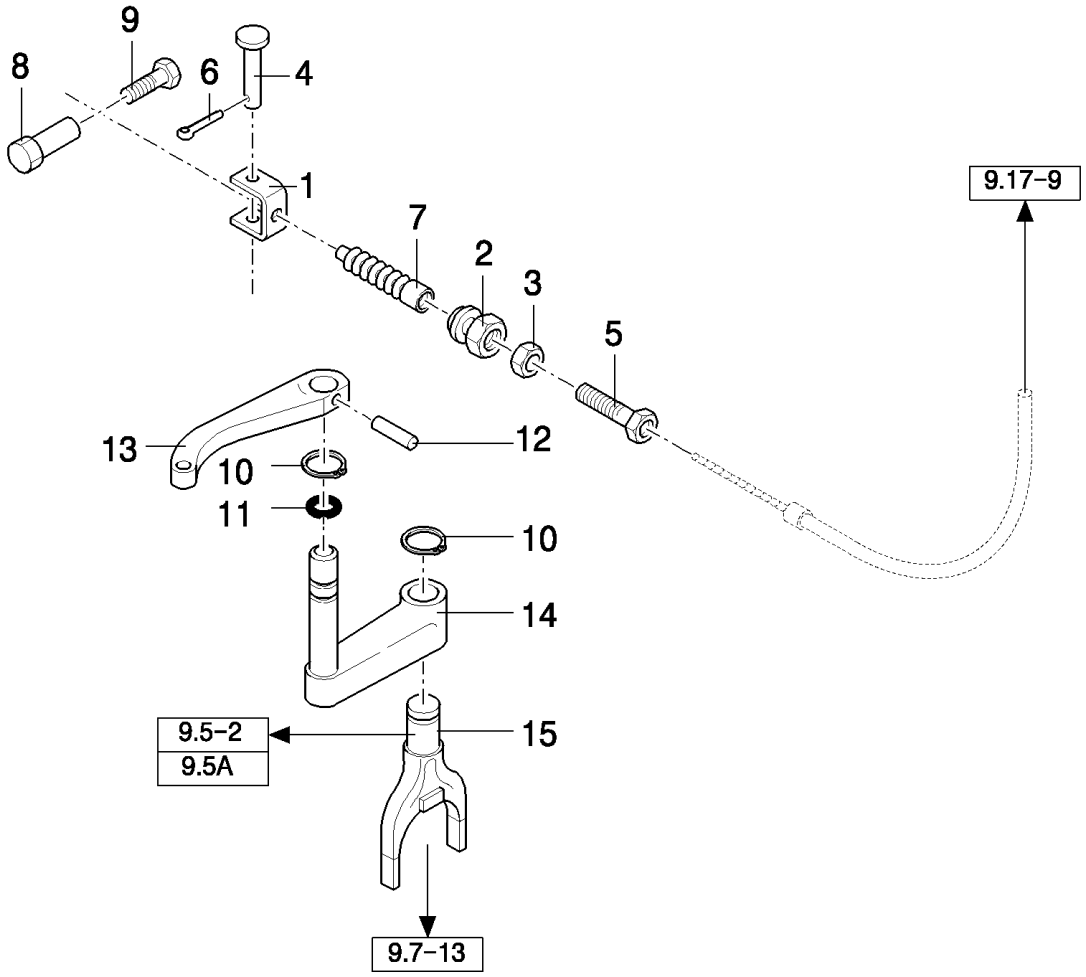

TX68 COMBINE - BASE UNIT

09.018(01) DIFFERENTIAL LOCK CONTROL

ссылка	Номер детали	Кол-во	Описание
1	388340	1	YOKE,
2	449470	1	NUT,
3	100016	1	NUT, M10, Cl 8,
4	376876	1	PIN, CLEVIS, M6 x 30,
5	449469	1	SCREW,
6	300399	1	PIN, SPLIT (COTTER),
7	9818291	1	BELLOWS,
8	381140	1	CLAMP,
9	120100	1	BOLT, Hex, M6 x 20, 8.8,
10	370002	2	RING, SNAP, M25, Ext,
11	89818942	1	O-RING,
12	9506888	1	PIN,
13	89818943	1	HANDLE, , FOR TX62-63-64-65-66-68 ONLY
13	84038078	1	HANDLE, , FOR TX67 ONLY
14	89818945	1	ARM,
15	89818947	1	YOKE,

09.019(01) BRAKE CALIBER

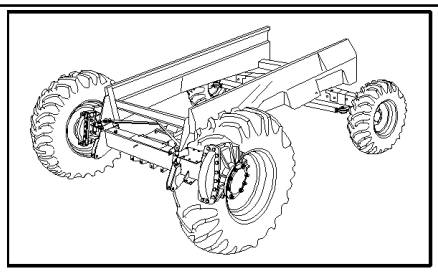

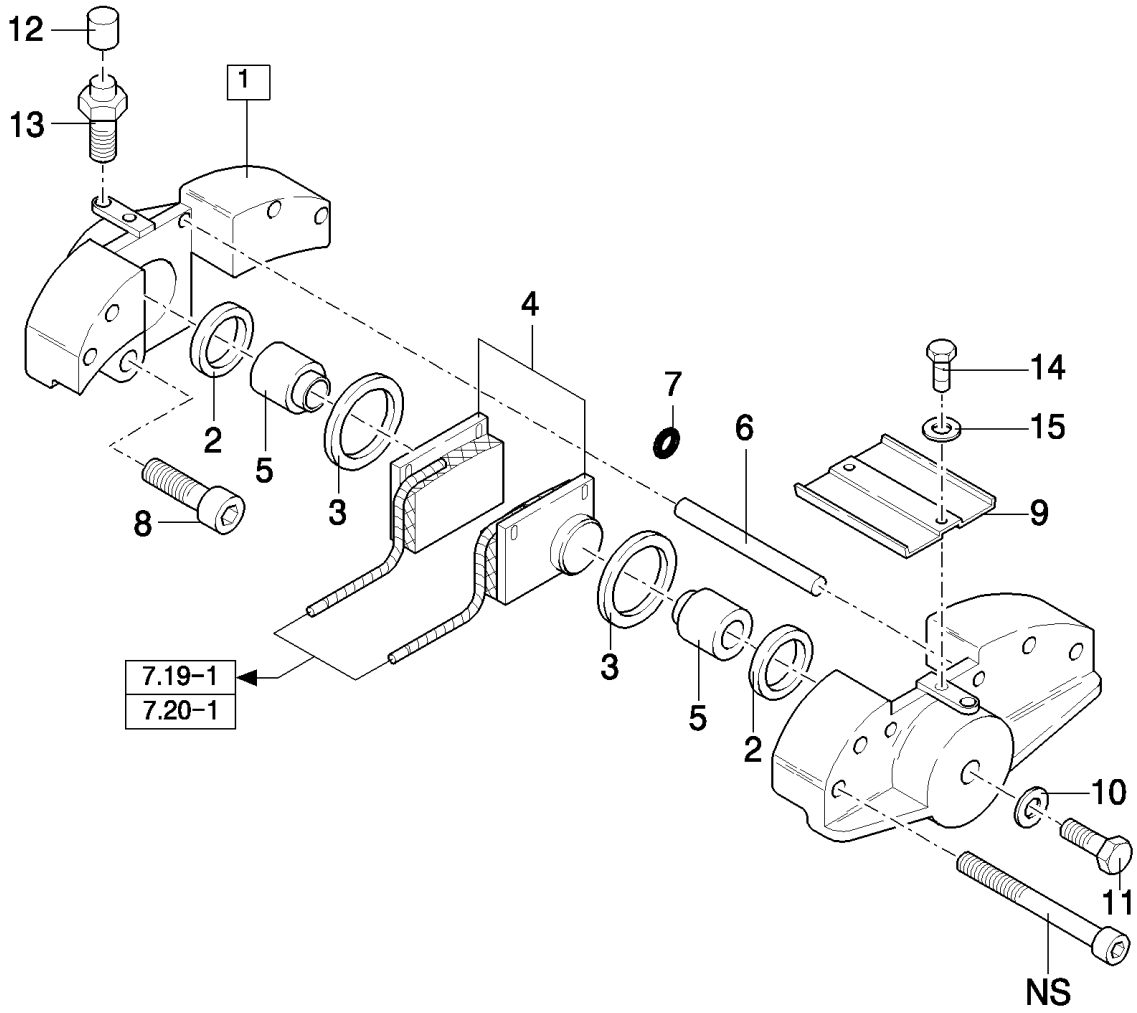

TX68 COMBINE - BASE UNIT

09.019(01) BRAKE CALIBER

ссылка	Номер детали	Кол-во	Описание
1	9819370	4	BRAKE, (2 to 7)
2	9835351	8	GASKET,
3	9835350	8	GASKET,
4	9832306	8	BRAKE, PAD,
5	9850149	8	PISTON,
6	9850148	8	PIN,
7	9835353	4	O-RING,
8	9817243	8	SCREW, Hex Soc Hd, M16 x 50, 12.9, Cap, HS, CL 12.9, M16 x 2 x 50
9	84004317	2	COVER,
10	9832305	8	WASHER, , -C1237
10	84439102	8	WASHER, SEALING, , D1238-
11	9832307	8	PLUG,
12	9832308	4	PLUG,
13	9835349	4	CAP,
14	300806	4	SCREW, Hex, M5 x 10, 8.8, Full Thd,
15	322356	4	WASHER,

09.020(01) CIRCUIT FOR HYDRAULIC BRAKES

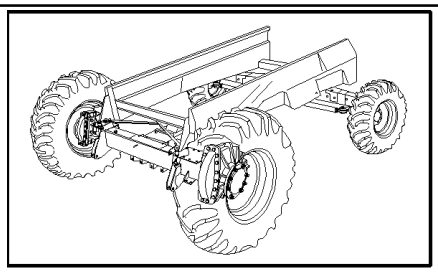

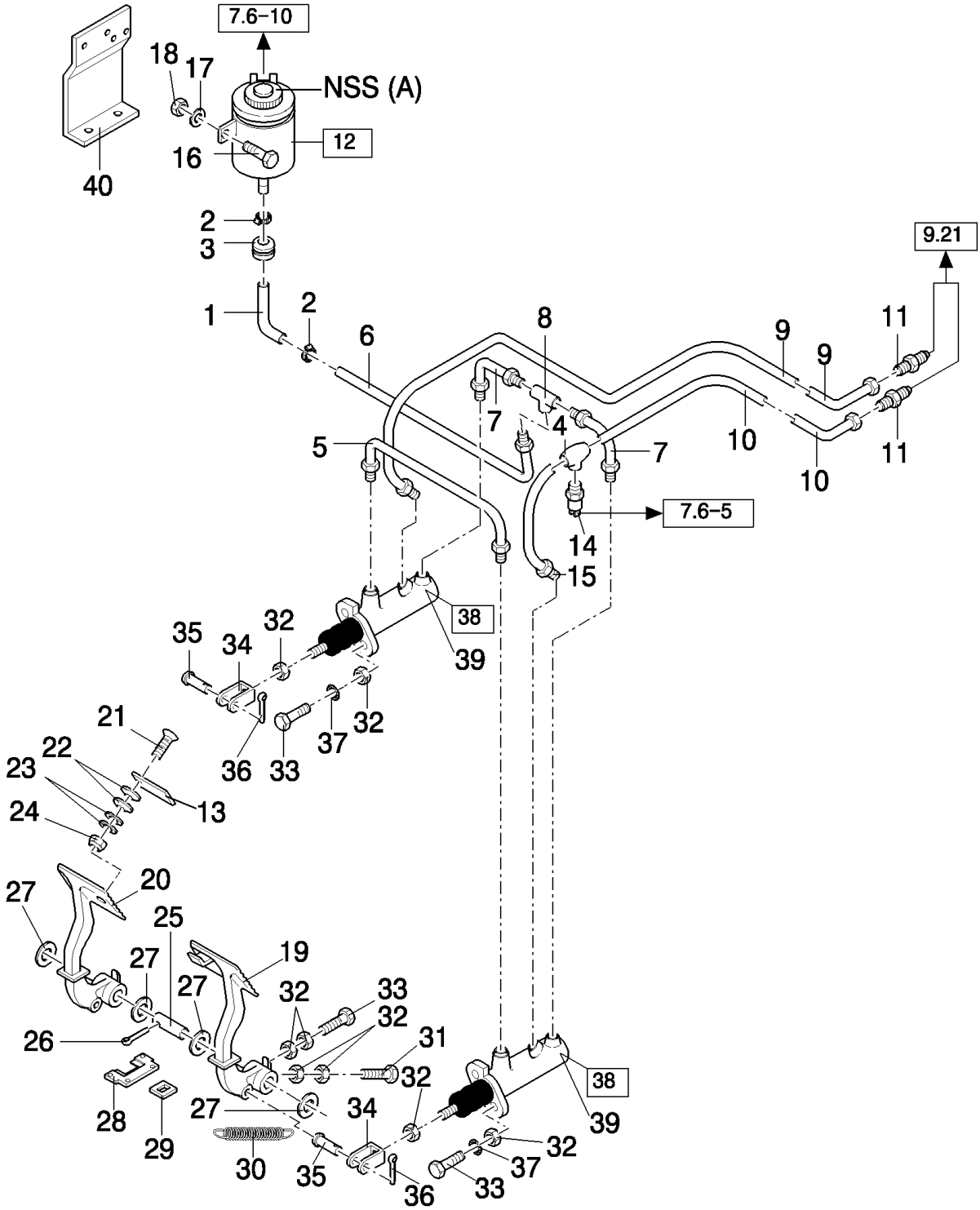

TX68 COMBINE - BASE UNIT

09.020(01) CIRCUIT FOR HYDRAULIC BRAKES

ссылка	Номер детали	Кол-во	Описание
1	410970	1	HOSE,
2	913888	2	CLAMP, HOSE,
3	338844	1	GROMMET,
4	9505391	1	TEE,
5	84014317	2	TUBE, HYD,
6	84014219	1	TUBE, HYD,
7	9837814	2	TUBE, HYD,
8	919855	1	TEE,
9	84000932	1	TUBE, HYD,
10	84014321	1	TUBE, HYD,
11	336722	2	CONNECTOR, HYD.,
12	9819520	1	RESERVOIR, BRAKE FLUID, (A)
13	449009	1	PLATE,
14	354372	1	SWITCH, PRESSURE,
15	84014319	1	TUBE, HYD,
16	120101	2	BOLT, Hex, M6 x 30, 8.8, Full Thd,
17	322357	2	WASHER, SPRING, Belleville, M6,
18	15896221	2	NUT, M6, Cl 10,
19	9594861	1	PEDAL, LH
20	9594862	1	PEDAL, RH
21	412168	1	SCREW, Hex Soc Flat Hd, M8 x 30, 8.8, M8x30
22	397881	2	WASHER, SPRING,
23	84012127	2	WASHER, LOCK,
24	86629542	1	NUT, LOCK, M8 x 1.25, Cl 8,
25	9819905	1	SHAFT,
26	130007	2	PIN, SPLIT (COTTER), M4 x 25,
27	9513615	AR	WASHER,
28	9819825	2	COVER,
29	9819826	2	SEAL,
30	9811656	2	SPRING,
31	43129	2	BOLT, Hex, M8 x 40, 8.8,
32	9706690	10	NUT, M8, Cl 8,
33	43128	6	BOLT, Hex, M8 x 30, 8.8,
34	921491	2	YOKE,
35	412414	2	PIN, CLEVIS, M8 x 35,
36	9512667	2	PIN, SPLIT (COTTER), M2 x 20,
37	322358	4	WASHER, SPRING, Belleville, M8,
38	9509901	2	MASTER CYLINDER, (39)
39	9817544	2	KIT, REPAIR,
40	84032137	1	SUPPORT, , FOR TX67 ONLY

09.021(01) CIRCUIT FOR HYDRAULIC BRAKES

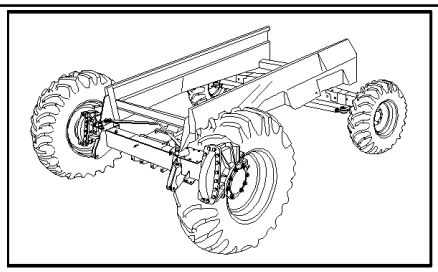

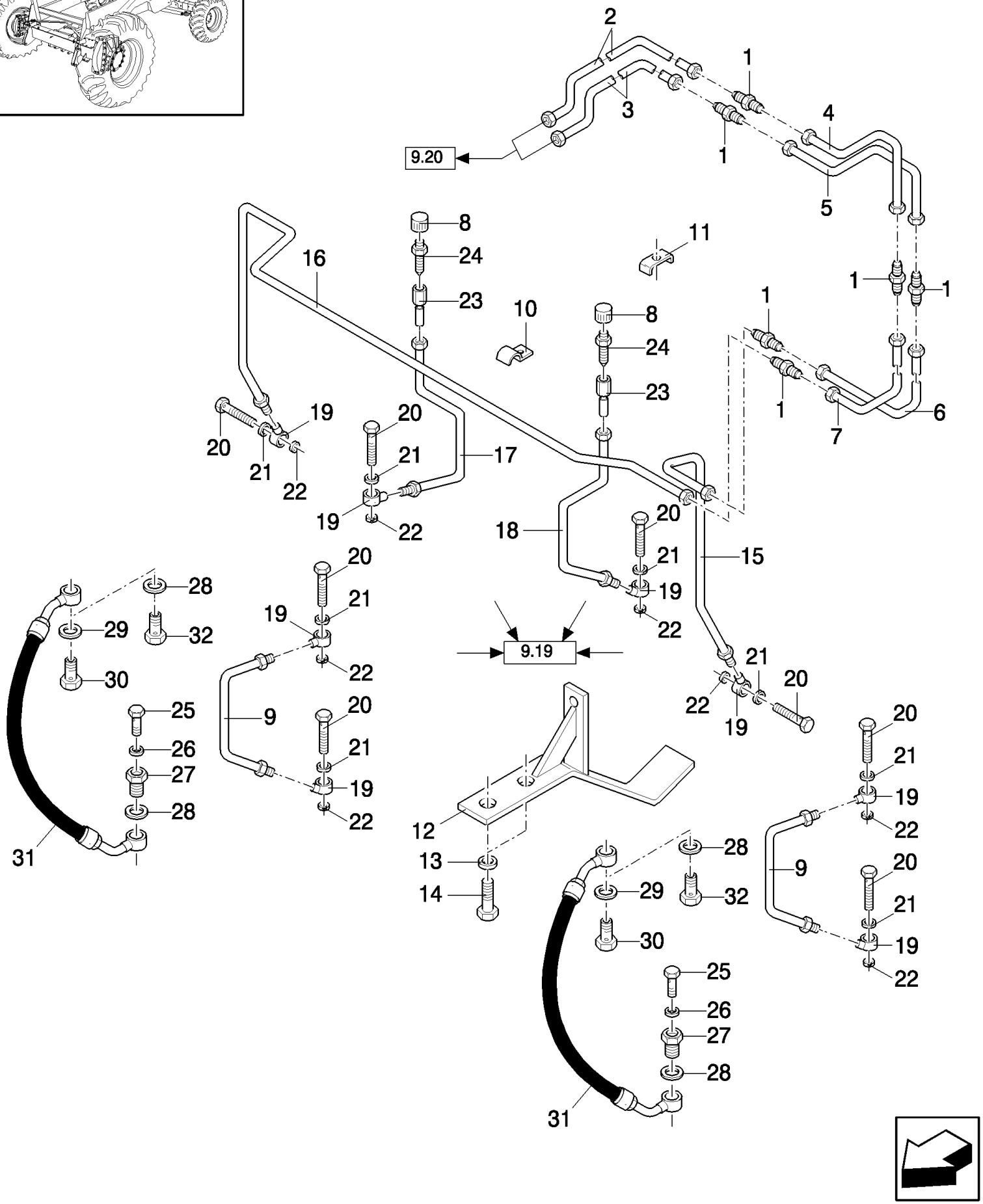

TX68 COMBINE - BASE UNIT

09.021(01) CIRCUIT FOR HYDRAULIC BRAKES

ссылка	Номер детали	Кол-во	Описание
1	336722	6	CONNECTOR, HYD.,
2	84012318	1	TUBE, HYD, , -C5640
2	84022283	1	TUBE, HYD, , FOR TX62-63-64-65-66-68 ONLY, D5640-
2	84038132	1	TUBE, HYD, , FOR TX67 ONLY
3	84012317	1	TUBE, HYD, , -C5640
3	84022281	1	TUBE, HYD, , FOR TX62-63-64-65-66-68 ONLY, D5640-
3	84038130	1	TUBE, HYD, , FOR TX67 ONLY
4	84012322	1	TUBE, HYD, , -C5640
4	84022287	1	TUBE, HYD, , FOR TX62-63-64-65-66-68 ONLY, D5640-
4	84038213	1	TUBE, HYD, , FOR TX67 ONLY, FOR SELF-LEVELLING ONLY
4	84039305	1	TUBE, HYD, , FOR FIXED SHOE ONLY, FOR TX67 ONLY
5	84012320	1	TUBE, HYD, , -C5640
5	84022285	1	TUBE, HYD, , FOR TX62-63-64-65-66-68 ONLY, D5640-
5	84038215	1	TUBE, HYD, , FOR TX67 ONLY, FOR SELF-LEVELLING ONLY
5	84039303	1	TUBE, HYD, , FOR FIXED SHOE ONLY, FOR TX67 ONLY
6	84041332	1	TUBE, HYD, , FOR TX62-63-64-65-66-68 ONLY, FOR SELF-LEVELLING ONLY
6	84041329	1	TUBE, HYD, , FOR FIXED SHOE ONLY, FOR TX62-63-64-65-66-68 ONLY
7	84041334	1	TUBE, HYD, , FOR TX62-63-64-65-66-68 ONLY, FOR SELF-LEVELLING ONLY
7	84041331	1	TUBE, HYD, , FOR FIXED SHOE ONLY, FOR TX62-63-64-65-66-68 ONLY
8	9835349	2	CAP,
9	9835995	2	TUBE, , -C1257
9	84441718	2	TUBE, , BSN F258359
10	336748	2	CLAMP,
11	336760	AR	CLAMP,
12	84015453	2	SUPPORT,
13	140015	4	WASHER, 10MM
14	43138	4	SCREW, Hex, M10 x 20, 8.8, Full Thd,
15	9837002	1	TUBE, HYD, , -C7510
15	84038134	1	TUBE, HYD, , D7510-
16	9837001	1	TUBE, HYD, , -C7510
16	84038136	1	TUBE, HYD, , D7510-
17	9835999	1	TUBE, HYD,
18	9837000	1	TUBE, HYD,
19	9832303	6	FITTING, , BSN C359
19	9832303	2	FITTING, , ASN D360
20	9832304	6	BOLT, BANJO, , BSN C359
20	9832304	2	BOLT, BANJO, , ASN D360
21	355607	8	SEALRING, , -C1237
21	84439102	8	WASHER, SEALING, , BSN F238359
21	84439102	6	WASHER, SEALING, , ASN D360
22	9832305	8	WASHER,
23	9835807	2	CONNECTOR, HYD.,
24	9832308	2	PLUG,
25	9832304	2	BOLT, BANJO, , ASN D360

ссылка	Номер детали	Кол-во	Описание
26	355607	2	SEALRING, , ASN D360
27	9832303	2	FITTING, , ASN D360
28	84439102	2	WASHER, SEALING, , ASN D360
29	84449206	8	RING, , ASN D360
30	84449205	4	SCREW, HOLLOW, , ASN D360
31	84447450	2	HOSE, FLEXIBLE, , ASN D360
32	9832307	2	PLUG, , ASN D360

09.022(01) TRANSMISSION HANDBRAKE

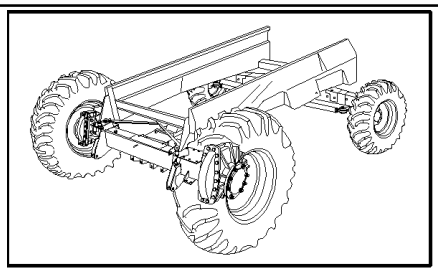

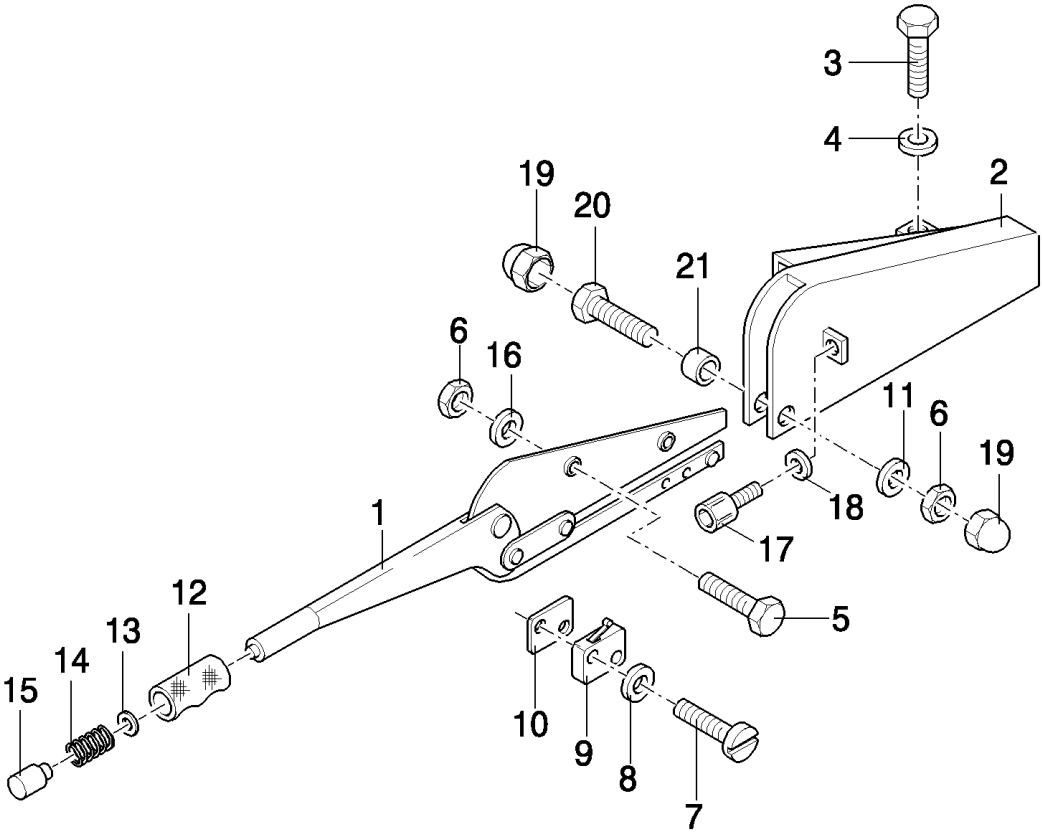

TX68 COMBINE - BASE UNIT

09.022(01) TRANSMISSION HANDBRAKE

ссылка	Номер детали	Кол-во	Описание
1	84007151	1	BRAKE, HAND,
2	84005291	1	SUPPORT,
3	120104	1	SCREW, Hex, M8 x 20, 8.8,
4	322358	1	WASHER, SPRING, Belleville, M8,
5	120102	4	SCREW, Hex, M6 x 40, 8.8, Full Thd,
6	15896221	5	NUT, M6, Cl 10,
7	301571	2	SCREW, M3x25
8	412547	2	WASHER, Serr, M3, 3MM
9	399159	1	SWITCH,
10	84015508	1	PLATE, COVER,
11	448889	1	WASHER,
12	81866090	1	HANDLE GRIP,
13	140015	1	WASHER, 6MM
14	84005684	1	SPRING,
15	84005683	1	KNOB,
16	322357	4	WASHER, SPRING, Belleville, M6,
17	84007540	2	SCREW,
18	84007539	2	WASHER,
19	747881	2	NUT, M6
20	86977789	1	SCREW, Hex, M6 x 35, 8.8,
21	84014547	1	BUSHING,

09.023(01) TRANSMISSION HANDBRAKE

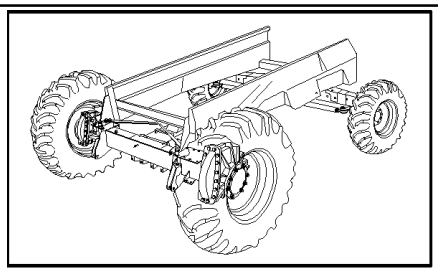

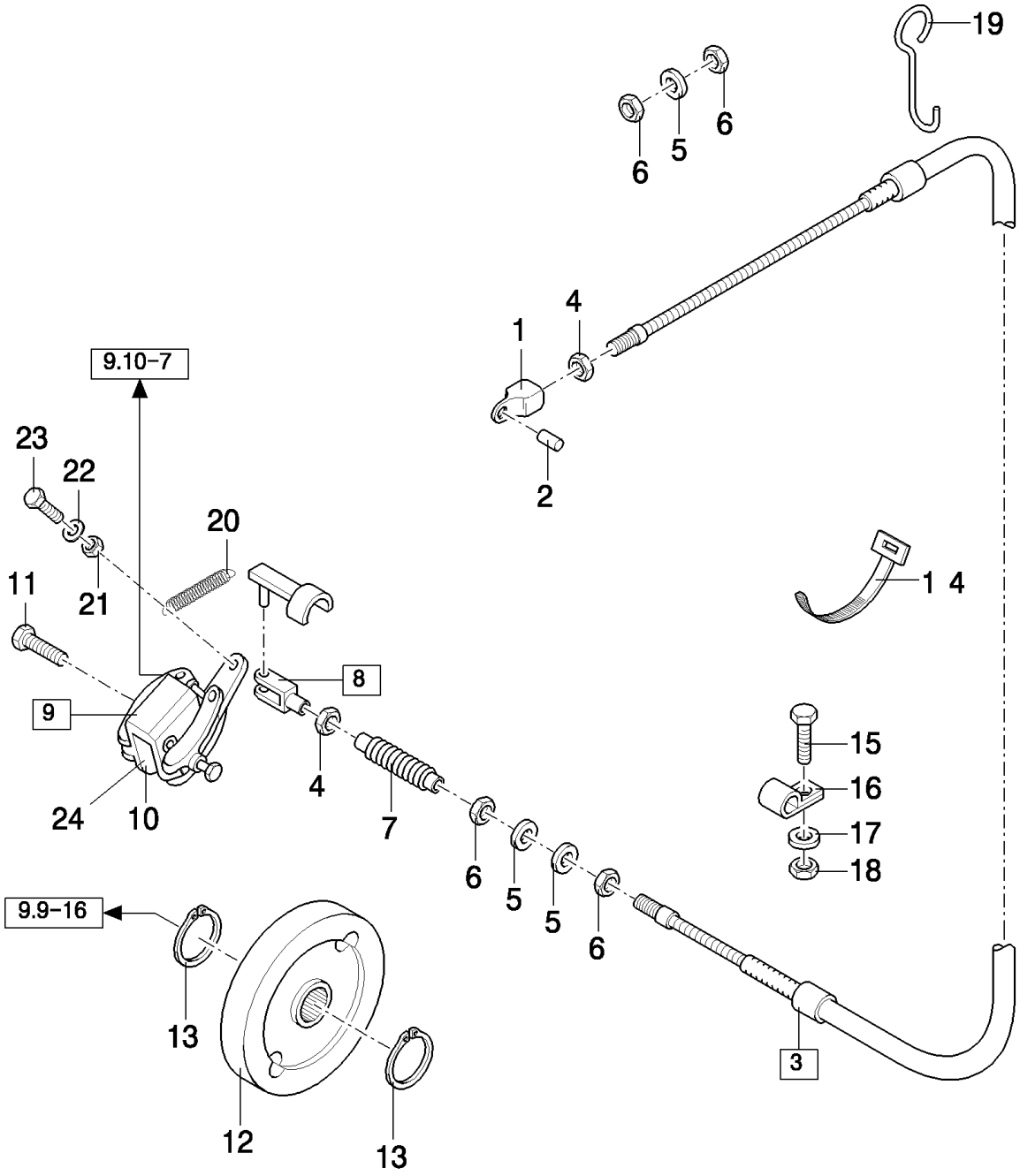

TX68 COMBINE - BASE UNIT

09.023(01) TRANSMISSION HANDBRAKE

ссылка	Номер детали	Кол-во	Описание
1	84005292	1	YOKE,
2	385818	1	PIN,
3	9850550	1	CABLE, (4 to 8)
4	354720	2	NUT, Thin, M10 x 1.5, Cl 04, M10
5	140048	3	WASHER, SPRING, Belleville, M16,
6	364164	4	NUT, Thin, M16 x 1.5, Cl 04, M16
7	84007603	1	PROTECTING COVER,
8	9838355	1	YOKE,
9	9819715	1	BRAKE, (10,24)
10	9819908	2	BRAKE LINING,
11	9832986	2	SCREW, M10x30
12	9819552	1	BRAKE DISC,
13	370006	2	RING, SNAP,
14	323597	2	STRAP, CABLE, M9 x 165 or M5 x 197,
15	86977786	2	BOLT, Hex, M6 x 25, 8.8,
16	335021	2	CLAMP,
17	322357	2	WASHER, SPRING, Belleville, M6,
18	15896221	2	NUT, M6, Cl 10,
19	84011921	1	HOOK,
20	29833	1	SPRING,
21	100037	1	NUT, M10 x 1.5, Cl 8,
22	378244	1	WASHER, M10,
23	120112	1	BOLT, Hex, M10 x 40, 8.8, Full Thd,
24	84818224	2	WASHER,

09.024(01) FRONT AXLE

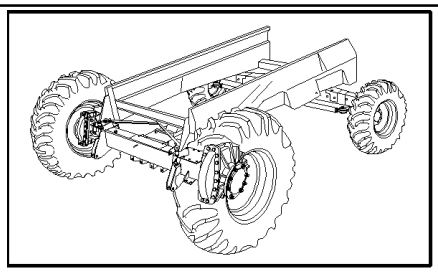

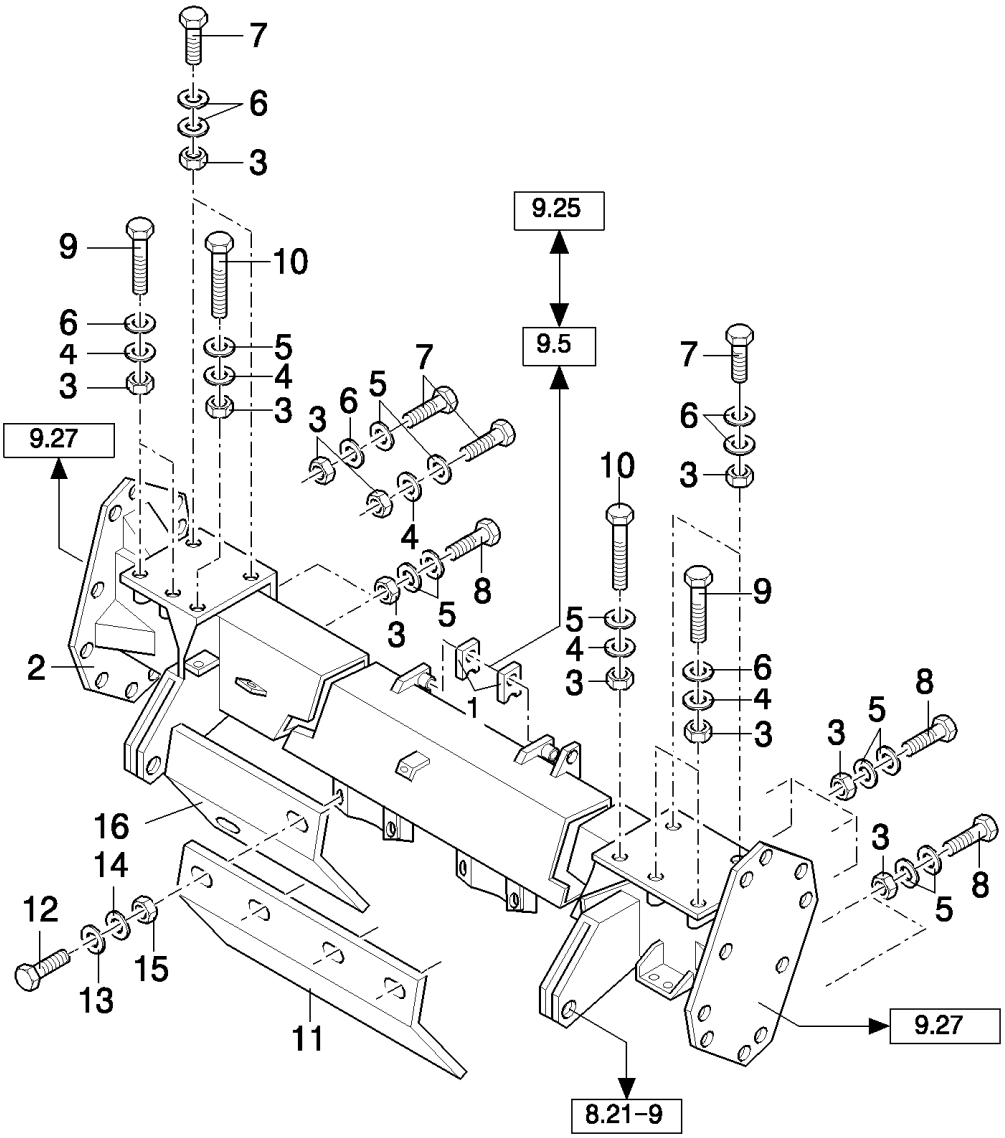

TX68 COMBINE - BASE UNIT

09.024(01) FRONT AXLE

ссылка	Номер детали	Кол-во	Описание
1	422114	AR	PLATE,
2	84015446	1	AXLE, FRONT, , FOR TX66 ONLY, -C1076
2	9839296	1	AXLE, FRONT, , FOR TX66 ONLY, D1077-
2	84036573	1	AXLE, FRONT, , FOR TX67 ONLY
2	9839296	1	AXLE, FRONT, , FOR TX68 ONLY
2	84018334	1	AXLE, FRONT, , FOR TX62-63-64 ONLY
2	84018334	1	AXLE, FRONT, , FOR TX65 ONLY, -C1032
2	84043370	1	AXLE, FRONT, , FOR TX65 ONLY, D1033-
3	100020	AR	NUT, M16, Cl 8,
4	333041	AR	WASHER,
5	333040	AR	WASHER,
6	394631	AR	WASHER,
7	385922	AR	SCREW, Hex, M16 x 45, 8.8,
8	120090	AR	SCREW, Hex, M16 x 50, 8.8,
9	43874	AR	SCREW, Hex, M16 x 110, 8.8,
10	120215	AR	BOLT, Hex, M16 x 190, 8.8, M16x140
11	9835716	1	SHIELD,
12	9706687	4	SCREW, Hex, M12 x 30, 8.8,
13	378245	4	WASHER, M12,
14	140046	4	WASHER, Belleville, M12,
15	337475	4	NUT, M12, Cl 10,
16	89506249	1	SHIELD,

09.025(01) GEARBOX AND BRAKE PROTECTIONS

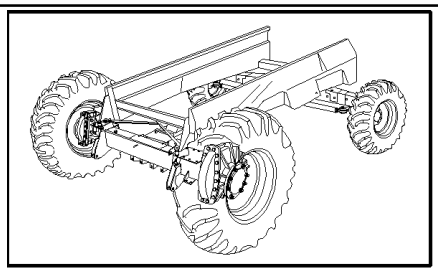

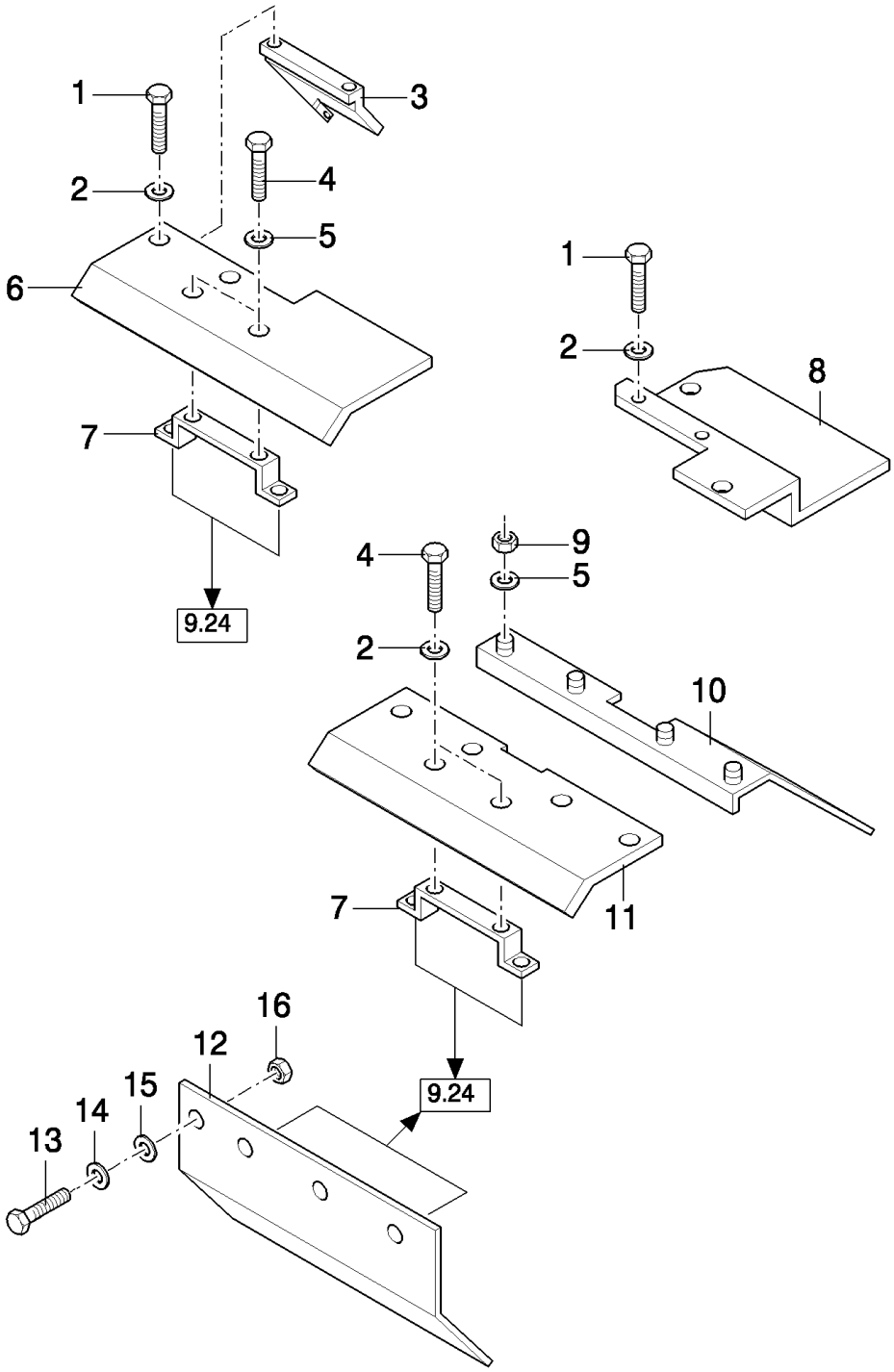

TX68 COMBINE - BASE UNIT

09.025(01) GEARBOX AND BRAKE PROTECTIONS

ссылка	Номер детали	Кол-во	Описание
1	80120099	5	BOLT, Hex, M6 x 16, 8.8,
2	322357	5	WASHER, SPRING, Belleville, M6,
3	9839989	1	SUPPORT, , -C6560
5	322358	2	WASHER, SPRING, Belleville, M8,
6	9839991	1	SHIELD, , -C6560
7	9835983	1	SUPPORT,
8	9835990	1	PLATE, , -C6560
9	15896221	4	NUT, M6, Cl 10,
10	84026590	1	SUPPORT, , D6560-
11	84026593	1	SHIELD, , D6560-
12	9835716	1	SHIELD, , D6560-
13	9706687	4	SCREW, Hex, M12 x 30, 8.8,
14	378245	4	WASHER, M12,
15	140046	4	WASHER, Belleville, M12,
16	337475	4	NUT, M12, Cl 10,
4	16043224	2	BOLT, Hex, M8 x 16, 8.8, Full Thd,

09.026(01) DRIVE SHAFTS

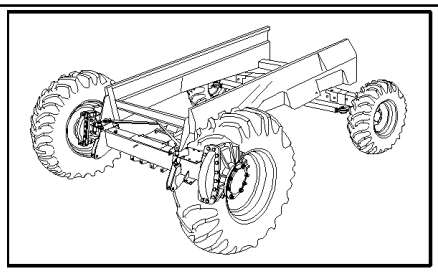

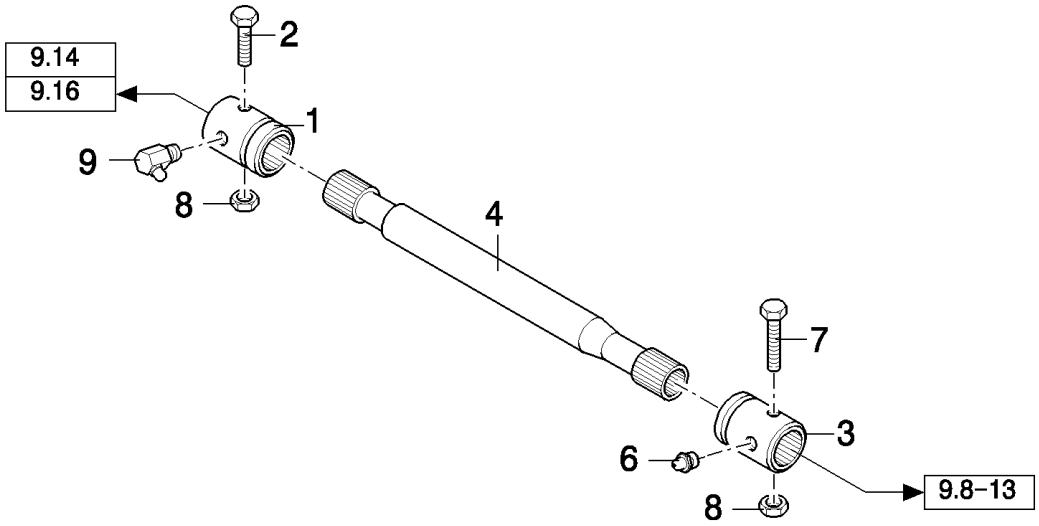

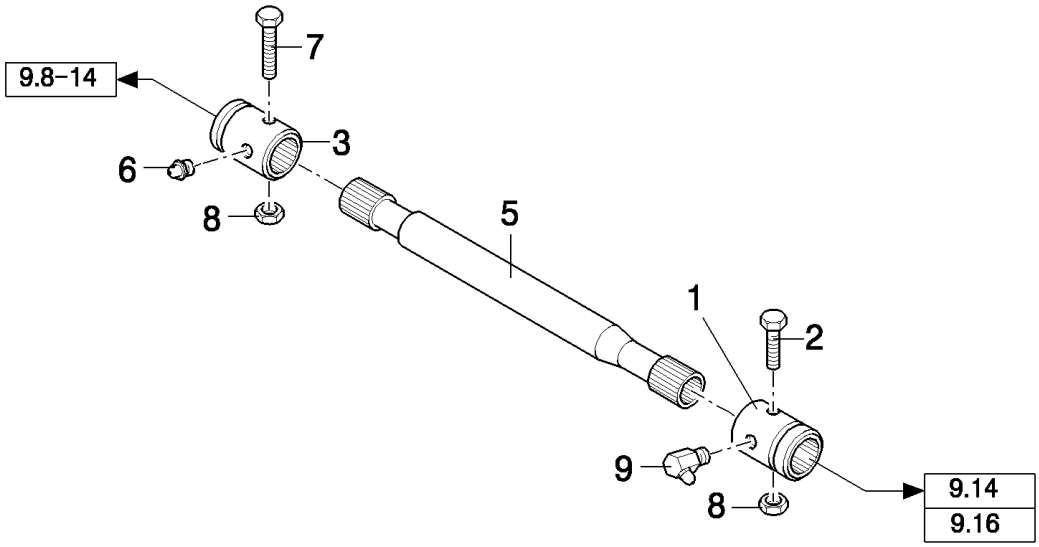

TX68 COMBINE - BASE UNIT

09.026(01) DRIVE SHAFTS

ссылка	Номер детали	Кол-во	Описание
1	445956	2	BUSHING, SPLINED, , FOR TX62-64 ONLY
1	445956	2	BUSHING, SPLINED, , FOR TX66 ONLY, -C1076
1	445956	2	BUSHING, SPLINED, , FOR TX65 ONLY, -C1032
1	748908	2	COUPLING, , FOR TX65 ONLY, D1033-
1	748908	2	COUPLING, , FOR TX66 ONLY, D1077-
1	748908	2	COUPLING, , FOR TX67-68 ONLY
2	120073	2	BOLT, Hex, M10 x 80, 8.8, , FOR TX62-63-64-65-66 ONLY
2	43144	2	SCREW, Hex, M10 x 70, 8.8, , FOR TX67-68 ONLY
3	445956	2	BUSHING, SPLINED,
4	9819526	1	SHAFT, CONTROL, RH, FOR TX66 ONLY, -C1076
4	9839297	1	SHAFT, CONTROL, RH, FOR TX66 ONLY, D1077-
4	84036572	1	SHAFT, CONTROL, RH, FOR TX67 ONLY
4	9839297	1	SHAFT, CONTROL, RH, FOR TX68 ONLY
4	89819525	1	SHAFT, CONTROL, RH, FOR TX62-63-64 ONLY
4	89819525	1	SHAFT, CONTROL, RH, FOR TX65 ONLY, -C1032
4	84043450	1	SHAFT, CONTROL, RH, FOR TX65 ONLY, D1033-
4	89819533	1	SHAFT, CONTROL, RH, FOR TX65 ONLY, WITH "TERRA" TYRES, -C1032
4	9833328	1	SHAFT, CONTROL, RH, WITH "TERRA" TYRES, FOR TX66 ONLY, -C1076
4	84056555	1	SHAFT, CONTROL, RH, FOR TX66 ONLY, WITH "TERRA" TYRES, D1077-
4	84056554	1	SHAFT, CONTROL, RH, WITH "TERRA" TYRES, FOR TX65 ONLY, D1033-
4	84041702	1	SHAFT, CONTROL, RH, FOR TX67 ONLY, WITH "TERRA" TYRES
4	89833330	1	SHAFT, CONTROL, RH, WITH "TERRA" TYRES, FOR TX68 ONLY, -C1065
4	84056555	1	SHAFT, CONTROL, RH, FOR TX68 ONLY, WITH "TERRA" TYRES, D1066-
4	89819533	1	SHAFT, CONTROL, RH, WITH "TERRA" TYRES, FOR TX62-63-64 ONLY, -C1065
4	440981	1	SHAFT, CONTROL, RH, FOR TX62-63-64 ONLY, WITH "TERRA" TYRES, D1066-
5	9819531	1	SHAFT, CONTROL, LH, FOR TX66 ONLY, -C1076
5	9839298	1	SHAFT, CONTROL, LH, FOR TX66 ONLY, D1077-
5	9839298	1	SHAFT, CONTROL, LH, FOR TX67-68 ONLY
5	9819531	1	SHAFT, CONTROL, LH, FOR TX62-63-64 ONLY
5	9819531	1	SHAFT, CONTROL, LH, FOR TX65 ONLY, -C1032
5	84043451	1	SHAFT, CONTROL, LH, FOR TX65 ONLY, D1033-
5	9833325	1	SHAFT, CONTROL, LH, WITH "TERRA" TYRES, FOR TX66 ONLY, -C1076
5	84056553	1	SHAFT, CONTROL, LH, FOR TX66 ONLY, WITH "TERRA" TYRES, D1077-
5	84041701	1	SHAFT, CONTROL, LH, WITH "TERRA" TYRES, FOR TX67 ONLY
5	89833329	1	SHAFT, CONTROL, LH, FOR TX68 ONLY, WITH "TERRA" TYRES, -C1065
5	84056553	1	SHAFT, CONTROL, LH, WITH "TERRA" TYRES, FOR TX68 ONLY, D1066-
5	89833327	1	SHAFT, CONTROL, LH, WITH "TERRA" TYRES, FOR TX62-63-64 ONLY, -C1065
5	9833325	1	SHAFT, CONTROL, LH, FOR TX62-63-64 ONLY, WITH "TERRA" TYRES, D1066-
5	89833327	1	SHAFT, CONTROL, LH, WITH "TERRA" TYRES, FOR TX65 ONLY, -C1032
5	84056553	1	SHAFT, CONTROL, LH, FOR TX65 ONLY, WITH "TERRA" TYRES, D1033-
6	321204	2	NIPPLE, LUBE, M6 x 1, 16mm lg,
7	120073	2	BOLT, Hex, M10 x 80, 8.8,
8	100037	2	NUT, M10 x 1.5, Cl 8,
9	323713	2	NIPPLE, LUBE,

09.027(01) EXTENSIONS FOR "TERRA" TYRES

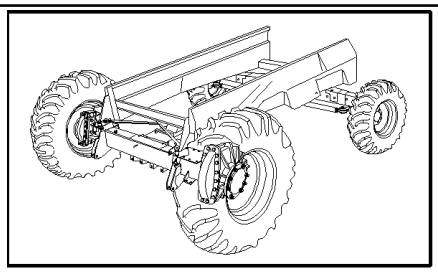

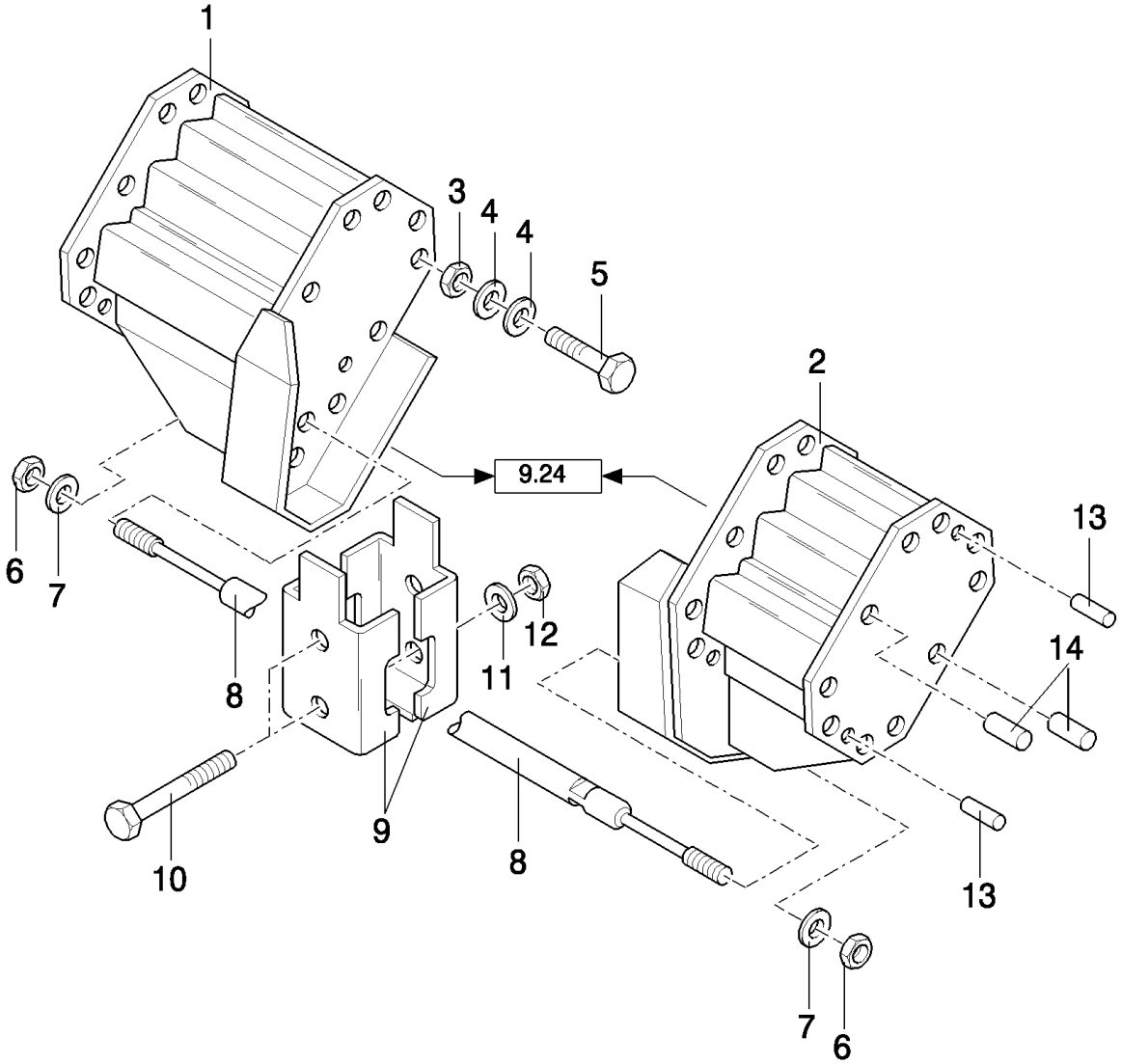

TX68 COMBINE - BASE UNIT

09.027(01) EXTENSIONS FOR "TERRA" TYRES

ссылка	Номер детали	Кол-во	Описание
1	9506232	1	EXTENSION, LH, FOR TX66 ONLY, -C1076
1	84053961	1	EXTENSION, LH, FOR TX66 ONLY, D1077-
1	80916682	1	EXTENSION, LH, FOR TX65 ONLY, -C1032
1	84053961	1	EXTENSION, LH, FOR TX65 ONLY, D1033-
1	89850900	1	LH, FOR TX68 ONLY, -C1065
1	84053961	1	EXTENSION, LH, FOR TX68 ONLY, D1066-
1	80916682	1	EXTENSION, LH, FOR TX62-63-64 ONLY, -C1065
1	9506232	1	EXTENSION, LH, FOR TX62-63-64 ONLY, D1066-
1	84041699	1	EXTENSION, LH, FOR TX67 ONLY
2	9506231	1	EXTENSION, RH, FOR TX66 ONLY, -C1076
2	84053962	1	EXTENSION, RH, FOR TX66 ONLY, D1077-
2	80916664	1	EXTENSION, RH, FOR TX65 ONLY, -C1032
2	84053962	1	EXTENSION, RH, FOR TX65 ONLY, D1033-
2	9850892	1	EXTENSION, RH, FOR TX68 ONLY, -C1065
2	84053962	1	EXTENSION, RH, FOR TX68 ONLY, D1066-
2	80916664	1	EXTENSION, RH, FOR TX62-63-64 ONLY, -C1065
2	9506231	1	EXTENSION, RH, FOR TX62-63-64 ONLY, D1066-
2	84041700	1	EXTENSION, RH, FOR TX67 ONLY
3	9706694	14	NUT, M20, Cl 8, , FOR TX62-63-64 ONLY
3	9706694	14	NUT, M20, Cl 8, , FOR TX65 ONLY, -C1032
3	9706694	14	NUT, M20, Cl 8, , FOR TX66 ONLY, -C1076
3	280881	16	NUT, 7/8"-9, G8, 7/8"-9UNC, FOR TX67-68 ONLY
3	280881	16	NUT, 7/8"-9, G8, 7/8"-9UNC, FOR TX65 ONLY, D1033-
3	280881	16	NUT, 7/8"-9, G8, 7/8"-9UNC, FOR TX66 ONLY, D1077-
4	536293	28	WASHER, 20MM, FOR TX62-63-64 ONLY
4	536293	28	WASHER, 20MM, FOR TX65 ONLY, -C1032
4	536293	28	WASHER, 20MM, FOR TX66 ONLY, -C1076
4	9850384	32	WASHER, , FOR TX67-68 ONLY
4	9850384	32	WASHER, , FOR TX65 ONLY, D1033-
4	9850384	32	WASHER, , FOR TX66 ONLY, D1077-
5	394877	14	BOLT, Hex, M20 x 70, 8.8, M20x70, FOR TX62-63-64 ONLY
5	394877	14	BOLT, Hex, M20 x 70, 8.8, M20x70, FOR TX65 ONLY, -C1032
5	394877	14	BOLT, Hex, M20 x 70, 8.8, M20x70, FOR TX66 ONLY, -C1076
5	280794	16	BOLT, Hex, 7/8"-9 x 3", G8, 7/8"x3", FOR TX68 ONLY
5	280794	16	BOLT, Hex, 7/8"-9 x 3", G8, 7/8"x3", FOR TX65 ONLY, D1033-
5	280794	16	BOLT, Hex, 7/8"-9 x 3", G8, 7/8"x3", FOR TX66 ONLY, D1077-
5	84041696	16	SCREW, , FOR TX67 ONLY
6	300852	2	NUT, M30 x 1.5, Cl 8, M30
7	140184	2	WASHER,
8	9850914	1	SHAFT, , FOR TX66-67-68 ONLY
8	84056394	1	SHAFT, , FOR TX62-63-64-65 ONLY
9	9514269	2	CLAMP,
10	382358	2	BOLT, Hex, M16 x 200, 8.8,
11	140048	2	WASHER, SPRING, Belleville, M16,

TX68 COMBINE - BASE UNIT

09.027(01) EXTENSIONS FOR "TERRA" TYRES

ссылка	Номер детали	Кол-во	Описание
12	100020	2	NUT, M16, Cl 8,
13	918737	4	PIN, , FOR TX62-63-64-65-66 ONLY
14	921934	4	PIN, , FOR TX65-67-68 ONLY, -C1065
14	626826	4	PIN, , FOR TX65-66-67-68 ONLY, D1066-

09.028(01) TRACTION WHEELS

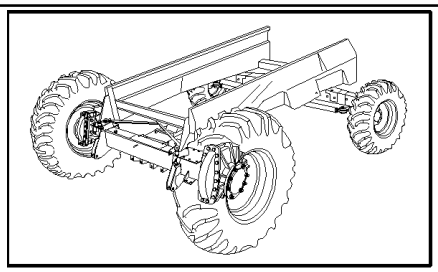

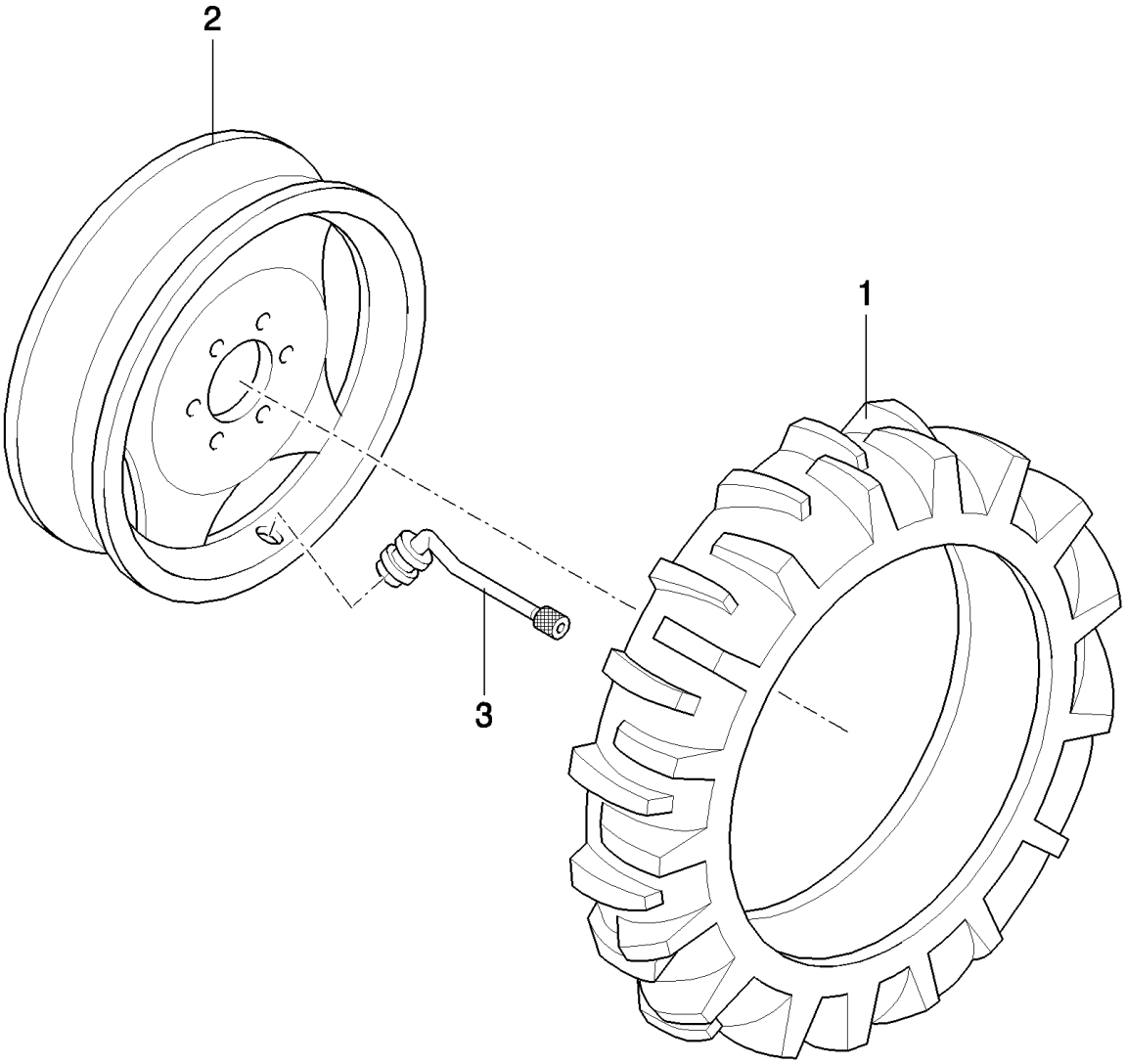

TX68 COMBINE - BASE UNIT

09.028(01) TRACTION WHEELS

ссылка	Номер детали	Кол-во	Описание
1	9515492	2	TYRE/TIRE, , 650/75R32-167A8-DT820, 24.5Rx32-167A8-STR TUBELESS
1	9515498	2	TYRE/TIRE, , 800/65R32-167A8-STR OR 30.5LRx32-167A8-STR (42) TUBELESS
1	84036000	2	TYRE/TIRE, , 73x44.00-32-12PR TUBELESS
1	84022908	2	TYRE/TIRE, , 800/65R32-172A8-STR
1	84058277	2	TYRE/TIRE, , 1050/50R32-174A8
1	84068189	2	TYRE/TIRE, , 650/75R32-172A8-DT822
1	84078788	2	TYRE/TIRE, , 650/75R32-167A8-DT822
1	84078790	2	TYRE/TIRE, , 800/65R32-172A8-DT822
1	84100135	2	TYRE/TIRE, , 1050/50R32-178A8
2	9850049	2	RIM, , 650/75R32-167A8-DT820, 650/75R32-172A8-DT822, 24.5Rx32-167A8-STR TUBELESS, -C1169
2	84429215	2	RIM, , 24.5Rx32-167A8-STR TUBELESS, 650/75R32-172A8-DT822, 650/75R32-167A8-DT820, D1170-
2	455102	2	WHEEL, 27Ax32, 800/65R32-172A8-STR, 800/65R32-167A8-STR OR 30.5LRx32-167A8-STR (42) TUBELESS, -C1169
2	84429222	2	RIM, 25Ax32, 8 STUD, 800/65R32-167A8-STR OR 30.5LRx32-167A8-STR (42) TUBELESS, 800/65R32-172A8-STR, D1170-
2	84045289	2	RIM, , 73x44.00-32-12PR TUBELESS, 1050/50R32-174A8, -C1169
2	84429229	2	RIM, , 1050/50R32-174A8, 1050/50R32-178A8, 73x44.00-32-12PR TUBELESS, D1170-
2	9850049	2	RIM, , 650/75R32-167A8-DT822, -C1169
2	84429215	2	RIM, , 650/75R32-167A8-DT822, D1170-
2	455102	2	WHEEL, 27x32, 800/65R32-172A8-DT822, -C1169
2	84429203	2	RIM, 27x32, 10 STUD, 800/65R32-172A8-DT822, D1170-
2	84015772	2	RIM, 27Ax32, 800/65R32-172A8-DT822, -C1169
2	84429218	2	RIM, 27Ax32, 10 STUD, 800/65R32-172A8-DT822, D1170-
3	397236	2	VALVE STEM,
3	84460168	2	VALVE STEM, , 1050/50R32-178A8

09.032(01) SPECIFIC PARTS - HYDROSTATIC DRIVE

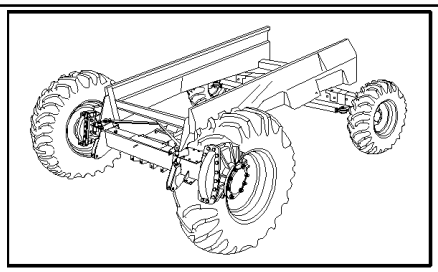

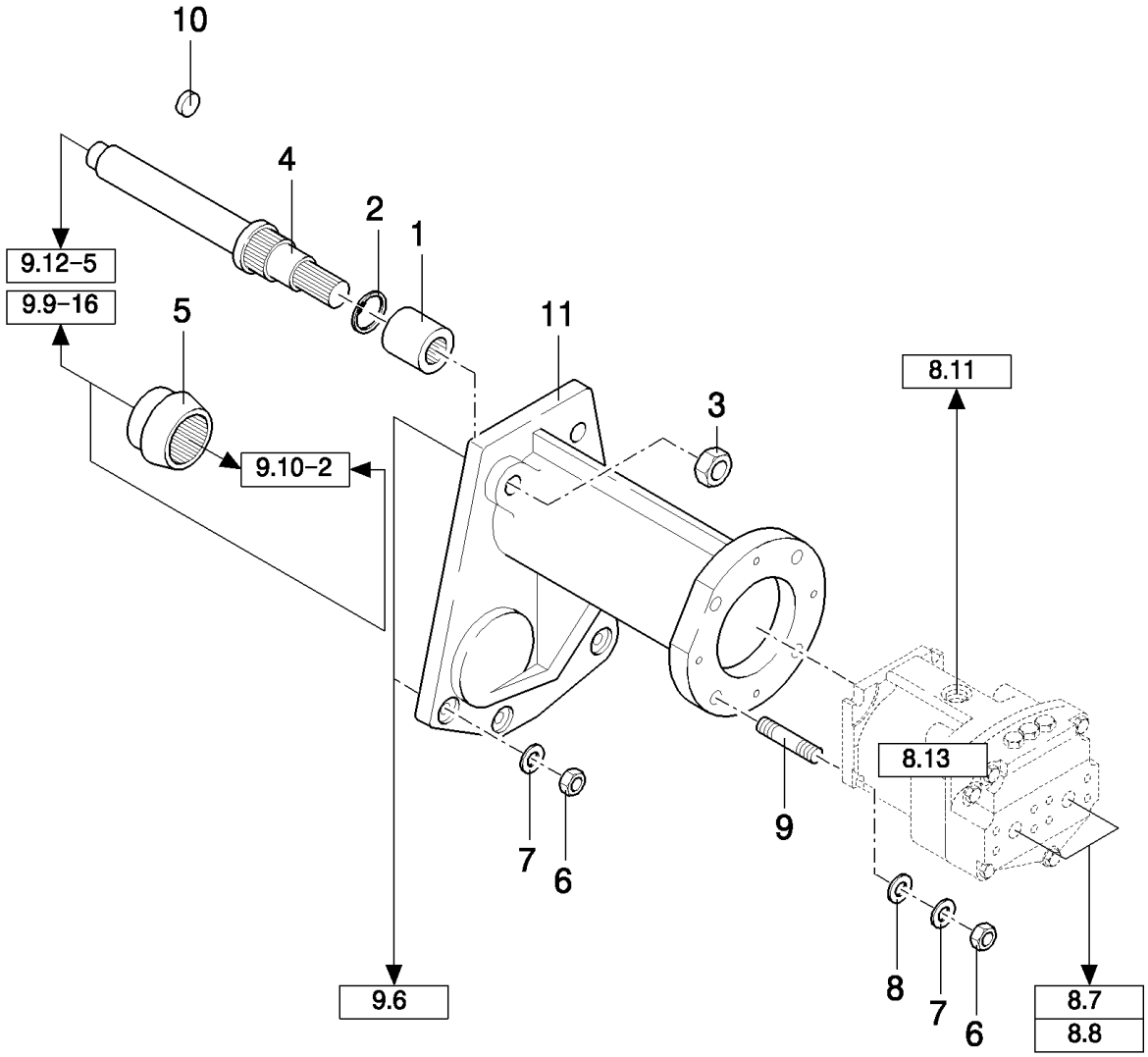

TX68 COMBINE - BASE UNIT

09.032(01) SPECIFIC PARTS - HYDROSTATIC DRIVE

ссылка	Номер детали	Кол-во	Описание
1	388121	1	COUPLING,
2	300642	1	RING, SNAP, M35, Int,
3	100037	2	NUT, M10 x 1.5, Cl 8,
4	439627	1	SHAFT,
5	9508580	1	BUSHING,
6	337475	8	NUT, M12, Cl 10,
7	140046	8	WASHER, Belleville, M12,
8	140086	4	WASHER,
9	9501647	4	STUD,
10	396661	1	PLUG,
11	9819446	1	SUPPORT,

09.033(01) FIXED STEERING AXLE

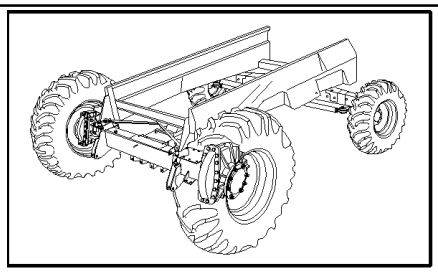

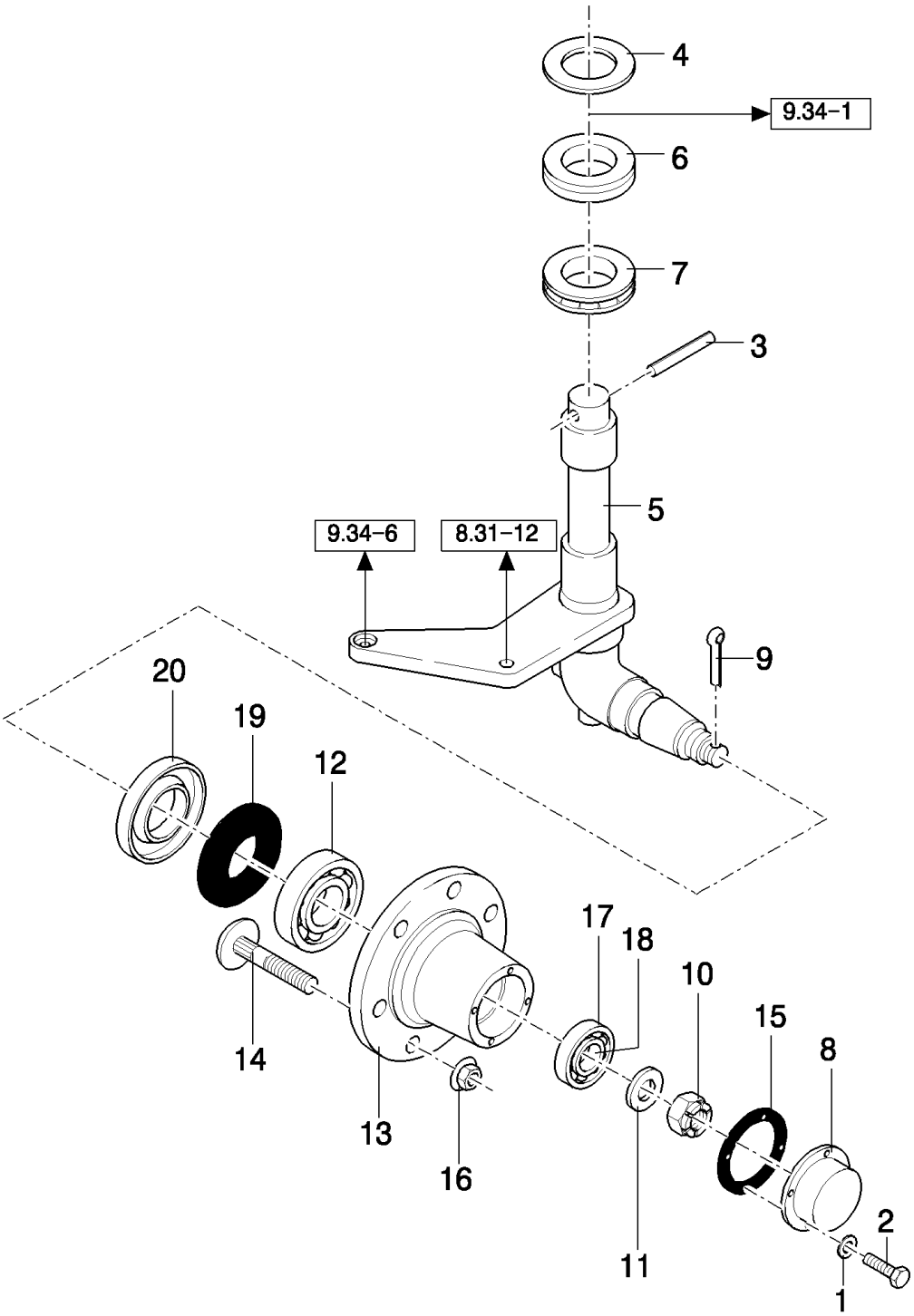

TX68 COMBINE - BASE UNIT

09.033(01) FIXED STEERING AXLE

ссылка	Номер детали	Кол-во	Описание
1	322357	8	WASHER, SPRING, Belleville, M6,
2	80120099	8	BOLT, Hex, M6 x 16, 8.8,
3	412384	2	PIN, LOCK, M10 x 100, Slotted,
4	35648	2	WASHER, LOCK,
5	750740	1	SPINDLE, RH, -C5410
5	84022435	1	SPINDLE, RH, D5410-
5	750741	1	SPINDLE, LH, -C5410
5	84022434	1	SPINDLE, LH, D5410-
6	751361	2	CAP, FLANGE COVER,
7	385803	2	BEARING ASSY,
8	743581	2	COVER,
9	130011	2	PIN, SPLIT (COTTER), M5 x 40,
10	309090	2	NUT, SLOTTED, M24 x 1.5, Cl 8, M24
11	348865	2	WASHER,
12	750347	2	BEARING, ROLLER,
13	84037081	2	HUB,
14	418817	12	BOLT,
15	743583	2	GASKET,
16	748960	12	NUT,
17	199955	2	BEARING, CUP,
18	199954	2	BEARING, ROLLER,
19	750298	2	ELEMENT, SEALING,
20	750792	2	DUST CAP,

09.034(01) FIXED STEERING AXLE

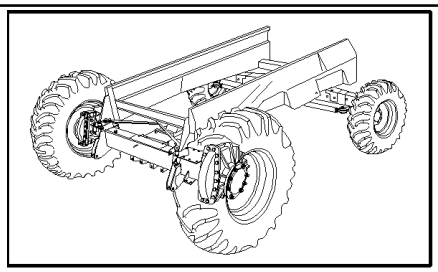

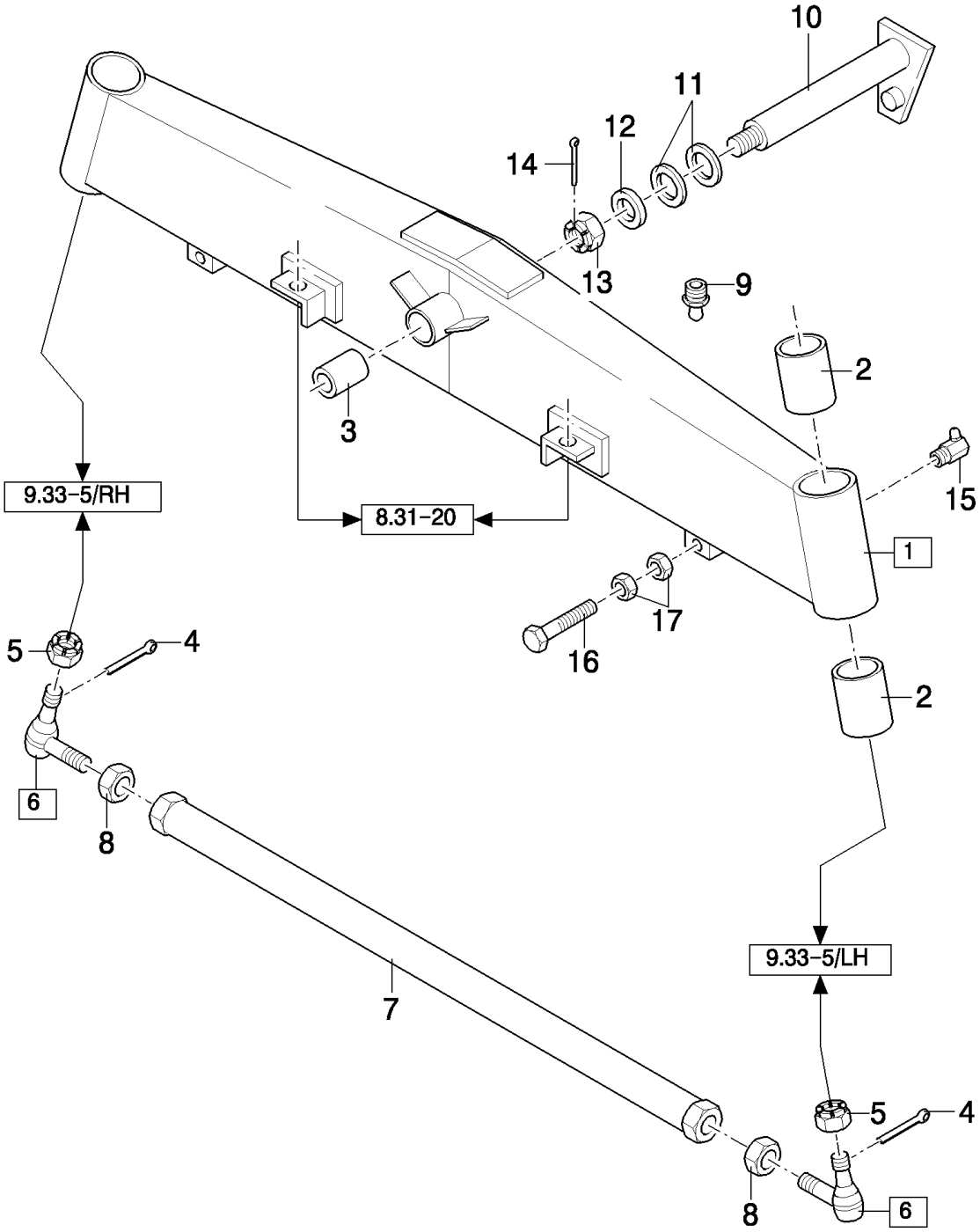

TX68 COMBINE - BASE UNIT

09.034(01) FIXED STEERING AXLE

ссылка	Номер детали	Кол-во	Описание
1	9508175	1	AXLE, STEERING, (2,3), -C5410
1	84022838	1	AXLE, STEERING, (2,3), FOR TX68 ONLY, D5410-
1	84037386	1	AXLE, STEERING, (2,3), FOR TX67 ONLY
2	750297	4	BUSHING,
3	9507804	2	BUSHING,
4	130005	2	PIN, SPLIT (COTTER), M3.2 x 32, , -C5410
4	300595	2	PIN, SPLIT (COTTER), M4 x 40, , D5410-
5	100090	2	NUT, SLOTTED, M14 x 1.5, Cl 8, , -C5410
5	412103	2	NUT, , D5410-
6	411344	2	BALL JOINT, (4,5), -C5410
6	84022165	2	BALL JOINT, (4,5), D5410-
7	751360	1	TIE-ROD, THREADED, , -C5410
7	84023640	1	TIE-ROD, THREADED, , FOR TX68 ONLY, D5410-
7	84037388	1	TIE-ROD, THREADED, , FOR TX67 ONLY
8	331209	2	NUT, 13/16"-16, G2,
9	321204	1	NIPPLE, LUBE, M6 x 1, 16mm lg,
10	9508118	1	SHAFT, , FOR TX68 ONLY
10	84026845	1	SHAFT, , FOR TX67 ONLY
11	539450	AR	SHIM, 0.5mm Thk,
12	327802	1	WASHER,
13	390822	1	NUT, SLOTTED, M30 x 1.5, Cl 8, M30
14	130016	1	PIN, SPLIT (COTTER), M6.3 x 63,
15	323713	4	NIPPLE, LUBE,
16	120122	2	BOLT, Hex, M12 x 50, 8.8, Full Thd,
17	337475	4	NUT, M12, Cl 10,

09.035(01) ADJUSTABLE STEERING AXLE - HEAVY DUTY (HD)

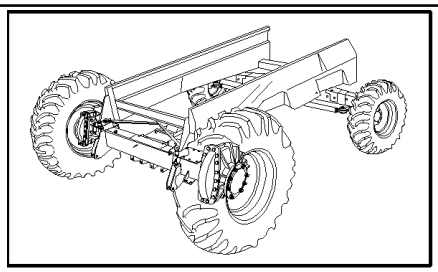

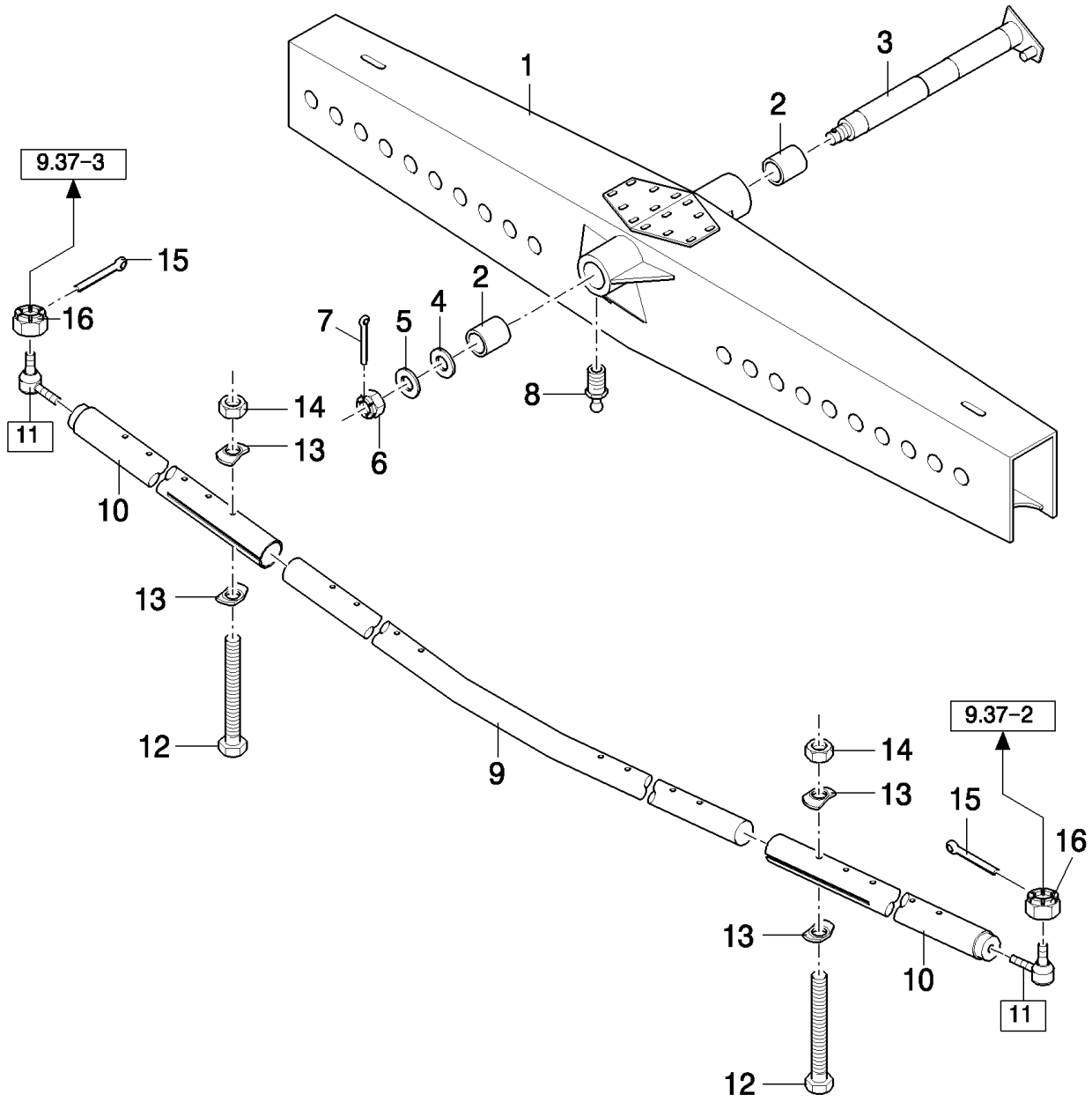

TX68 COMBINE - BASE UNIT

09.035(01) ADJUSTABLE STEERING AXLE - HEAVY DUTY (HD)

ссылка	Номер детали	Кол-во	Описание
1	84023967	1	AXLE, REAR, (2), -C1065
1	84052382	1	AXLE, REAR, (2), D1066-
2	84032130	2	BUSHING, , BSN C347
2	84334438	2	BUSHING, , ASN D348
3	84026845	1	SHAFT,
4	539450	AR	SHIM, 0.5mm Thk,
5	327802	1	WASHER,
6	390822	1	NUT, SLOTTED, M30 x 1.5, Cl 8, M30
7	130016	1	PIN, SPLIT (COTTER), M6.3 x 63,
8	321204	1	NIPPLE, LUBE, M6 x 1, 16mm lg,
9	84037170	1	TRACK ROD ASSY, , -C1065
9	84053254	1	TRACK ROD ASSY, , D1066-
10	84037169	2	TRACK ROD ASSY, , -C1065
10	84053253	2	TRACK ROD ASSY, , D1066-
11	84022165	2	BALL JOINT, (15,16)
12	120073	6	BOLT, Hex, M10 x 80, 8.8,
13	379401	12	CLAMP,
14	86514720	6	NUT, LOCK, M10
15	300595	2	PIN, SPLIT (COTTER), M4 x 40,
16	412103	2	NUT,

09.036(01) ADJUSTABLE STEERING AXLE - HEAVY DUTY (HD)

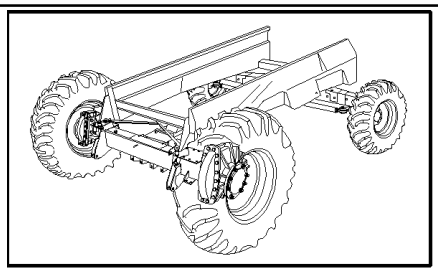

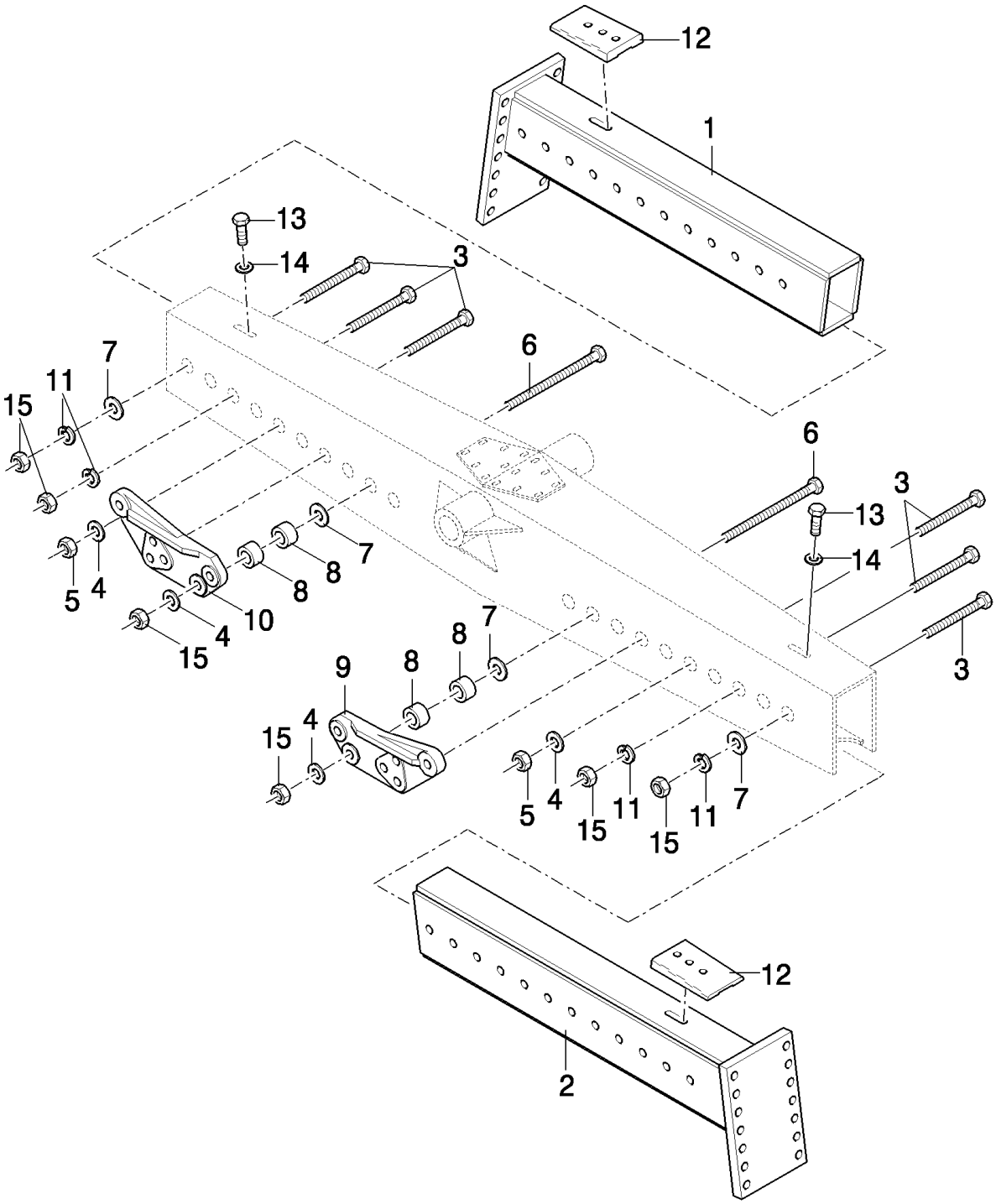

TX68 COMBINE - BASE UNIT

09.036(01) ADJUSTABLE STEERING AXLE - HEAVY DUTY (HD)

ссылка	Номер детали	Кол-во	Описание
1	84032928	1	EXTENSION, LH, -C1065
1	84052388	1	EXTENSION, LH, D1066-
2	84023500	1	EXTENSION, RH, -C1065
2	84052387	1	EXTENSION, RH, D1066-
3	62125	6	BOLT, M20x160
4	9850384	10	WASHER,
5	9706694	6	NUT, M20, Cl 8,
6	84037083	4	BOLT, Hex, M20 x 260, 8.8,
7	84032909	8	WASHER,
8	84032884	8	BUSHING, , -C1065
8	84053618	4	BUSHING, , D1066-
9	84023479	1	SUPPORT,
10	84023481	1	SUPPORT,
11	322359	12	WASHER, SPRING, Belleville, M20,
12	84023499	2	PLATE,
13	80120256	2	SCREW, M16x35
14	140091	2	WASHER,
15	380424	8	NUT, LOCK, M20 x 2.5, Cl 8,

09.037(01) ADJUSTABLE STEERING AXLE - HEAVY DUTY (HD)

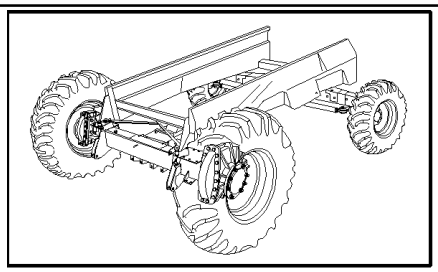

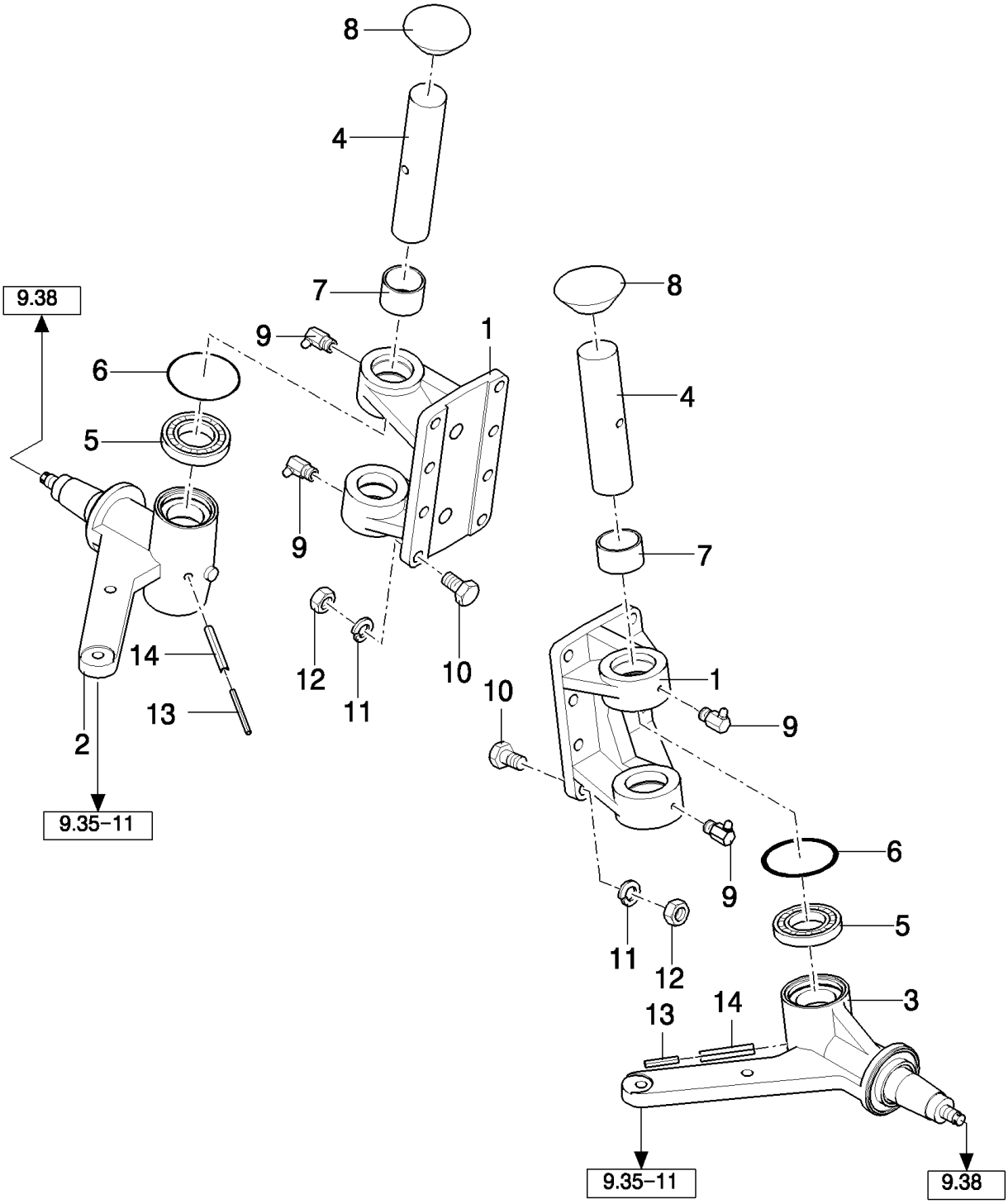

TX68 COMBINE - BASE UNIT

09.037(01) ADJUSTABLE STEERING AXLE - HEAVY DUTY (HD)

ссылка	Номер детали	Кол-во	Описание
1	84023087	2	SUPPORT,
2	84023386	1	SPINDLE, RH
3	84023387	1	SPINDLE, LH
4	84023763	2	SHAFT,
5	385803	2	BEARING ASSY,
6	84023614	4	O-RING, , -C1032
6	84045597	4	O-RING, , D1033-
7	84023556	4	BUSHING,
8	137395	4	DUST CAP,
9	323713	4	NIPPLE, LUBE,
10	382101	12	BOLT, Hex, M20 x 80, 8.8,
11	322359	12	WASHER, SPRING, Belleville, M20,
12	380424	12	NUT, LOCK, M20 x 2.5, Cl 8,
13	84037082	2	PIN, LOCK, M10 x 140, Slotted,
14	395758	2	PIN, LOCK, M16 x 140, Slotted,

09.038(01) ADJUSTABLE STEERING AXLE - HEAVY DUTY (HD)

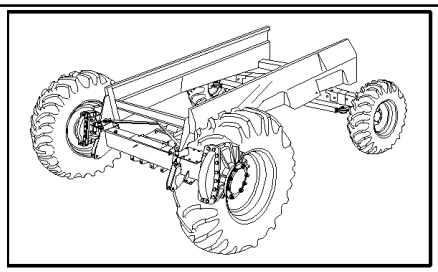

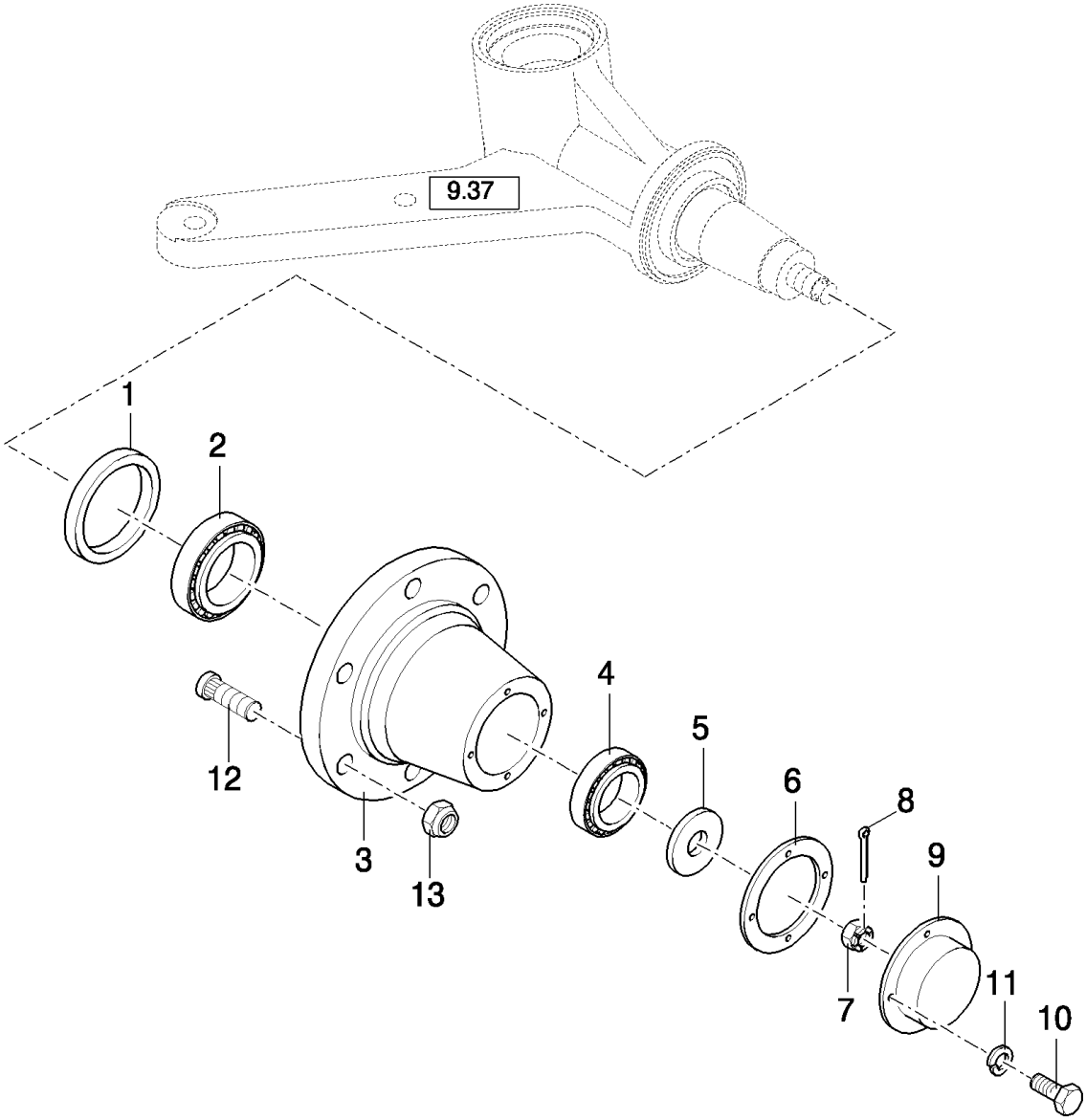

TX68 COMBINE - BASE UNIT

09.038(01) ADJUSTABLE STEERING AXLE - HEAVY DUTY (HD)

ссылка	Номер детали	Кол-во	Описание
1	750298	2	ELEMENT, SEALING,
2	750347	2	BEARING, ROLLER,
3	84037081	2	HUB,
4	357239	2	BEARING ASSY,
5	84037079	2	WASHER,
6	743583	2	GASKET,
7	309090	2	NUT, SLOTTED, M24 x 1.5, Cl 8, M24
8	130011	2	PIN, SPLIT (COTTER), M5 x 40,
9	743581	2	COVER,
10	80120099	8	BOLT, Hex, M6 x 16, 8.8,
11	322357	8	WASHER, SPRING, Belleville, M6,
12	418817	12	BOLT,
13	748960	12	NUT,

09.047(01) POWERED REAR AXLE

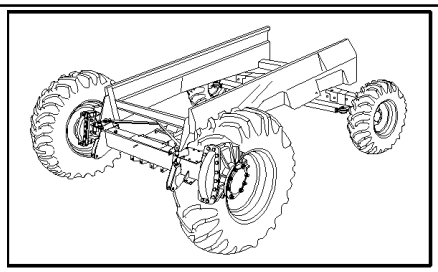

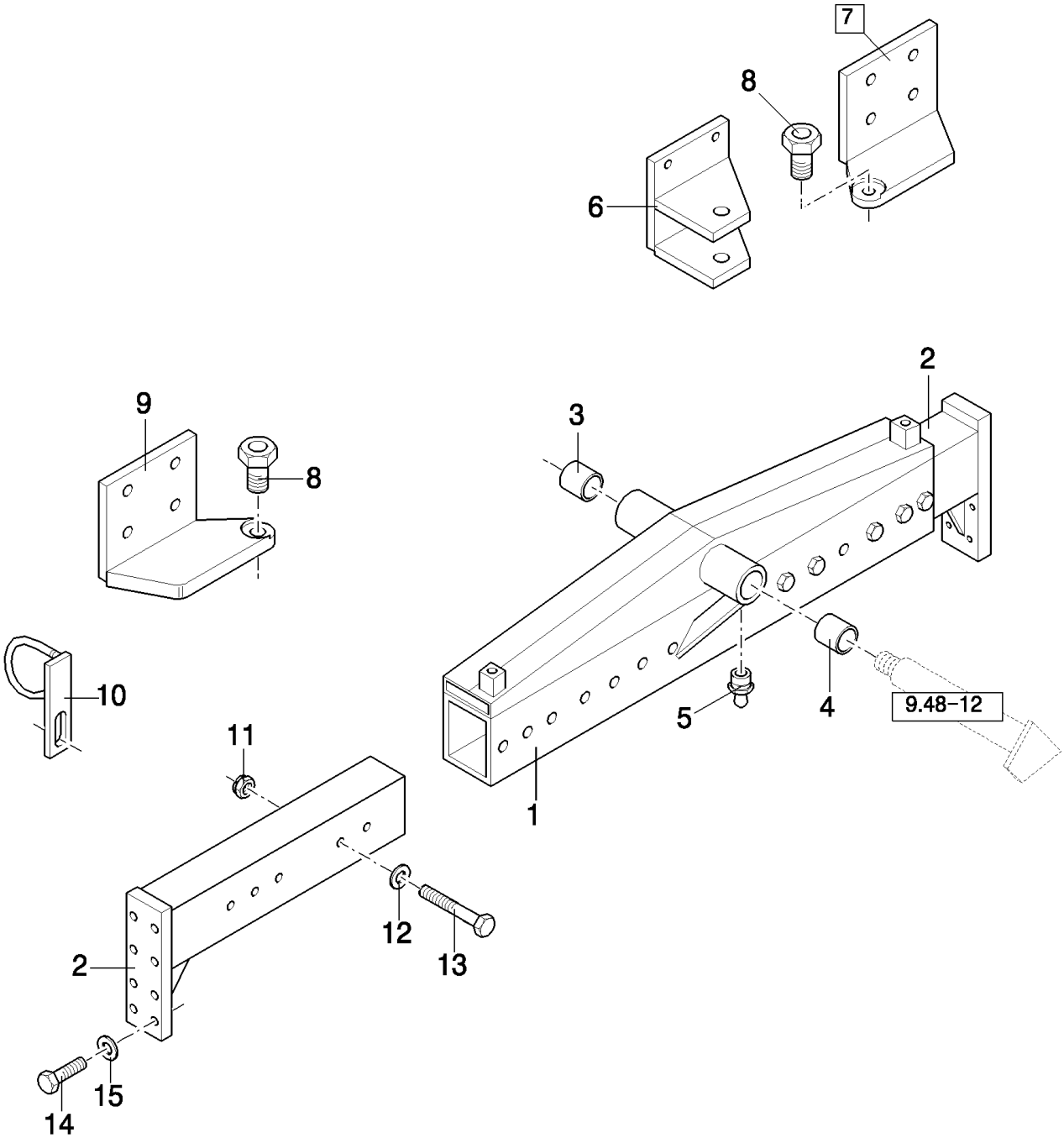

TX68 COMBINE - BASE UNIT

09.047(01) POWERED REAR AXLE

ссылка	Номер детали	Кол-во	Описание
1	9512247	1	AXLE, REAR,
2	9512246	2	AXLE, REAR,
3	9507803	1	BUSHING,
4	9507804	1	BUSHING,
5	321204	1	NIPPLE, LUBE, M6 x 1, 16mm lg,
6	9512257	1	SUPPORT, RH, FOR TX62-63-64-65-66 ONLY
7	9512252	1	SUPPORT, RH (8), FOR TX68 ONLY, -C5410
7	84023781	1	SUPPORT, RH (8), FOR TX67-68 ONLY, D5410-
8	84018586	2	INSERT, THREADED, , FOR TX68 ONLY, -C5410
8	84026784	2	INSERT, THREADED, , FOR TX67-68 ONLY, D5410-
9	9512251	1	SUPPORT, LH (8), FOR TX68 ONLY, -C5410
9	84023782	1	SUPPORT, LH (8), FOR TX67-68 ONLY, -C0047
9	84056531	1	BRACKET, LH, FOR TX65-67-68 ONLY, D1033-
10	9512253	4	GUIDE,
11	280375	12	NUT, LOCK, 3/4"-10, GC,
12	9512203	10	WASHER, 19MM
12	140176	4	WASHER, 19MM
13	9512205	4	SCREW,
13	281036	8	BOLT, Hex, 3/4"-10 x 7 1/2", G5,
14	281074	12	BOLT, Hex, 3/4"-10 x 2 1/2", G8,
15	578092	12	WASHER, 19MM

09.049(01) TIE-ROD, EXTENSION

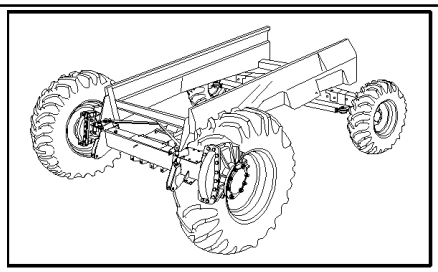

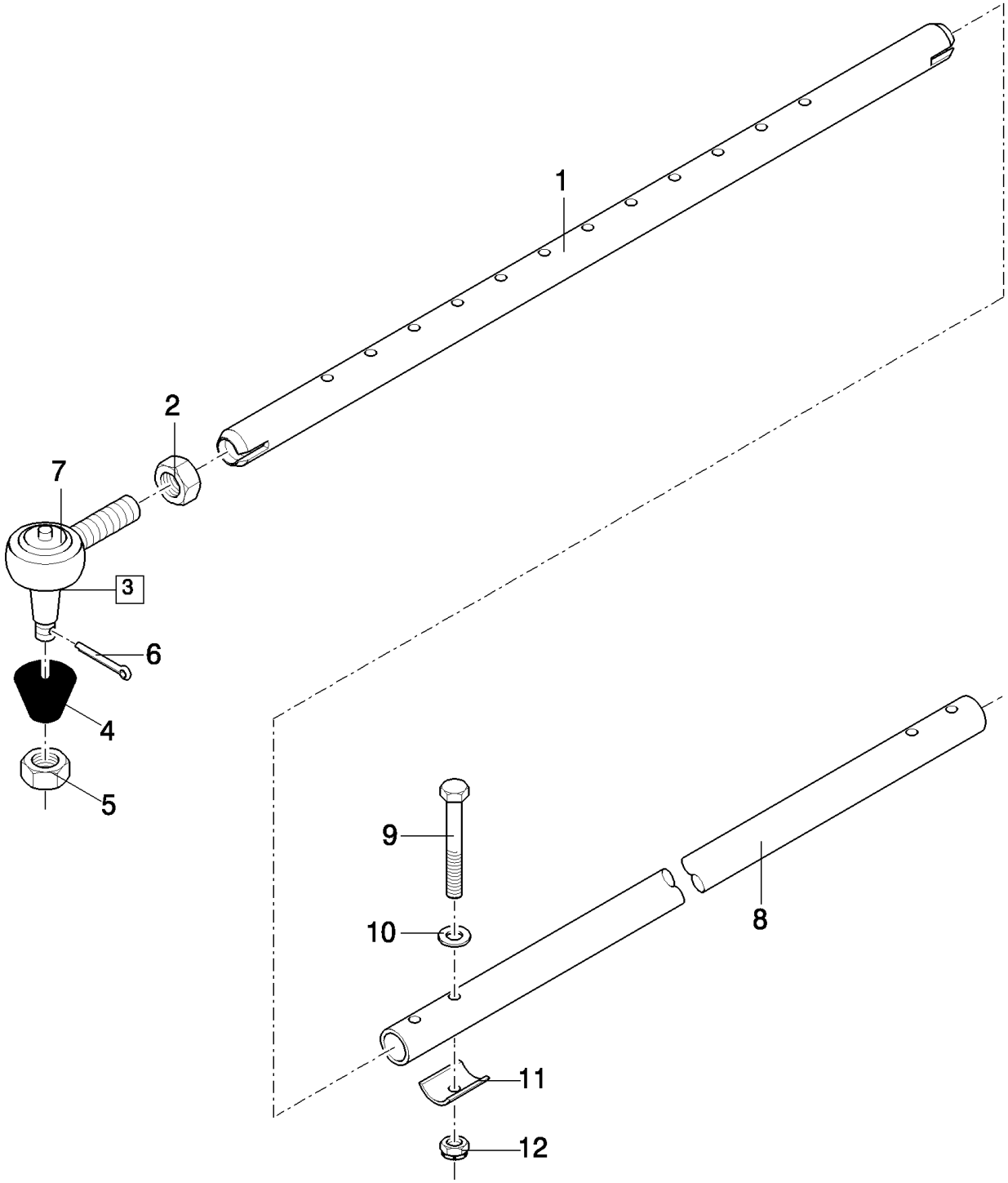

TX68 COMBINE - BASE UNIT

09.049(01) TIE-ROD, EXTENSION

ссылка	Номер детали	Кол-во	Описание
1	9512164	2	TUBE,
2	280748	2	NUT, Jam, 1"-16, G2,
3	677952	2	BALL JOINT, (4,5)
4	598329	2	COVER,
5	280172	2	NUT, SLOTTED, 7/8"-14,
6	300401	2	PIN, SPLIT (COTTER), M2 x 40,
7	332040	2	NIPPLE, LUBE, 90є, 1/8" NPT x .84" lg,
8	9512163	1	ROD,
9	9512144	4	BOLT,
10	9512175	4	SPACER,
11	627347	4	CLAMP,
12	88871	4	NUT, LOCK, 1/2"-13, GC,

TX68 COMBINE - BASE UNIT

09.050(01) BRACKETS FOR VALVE

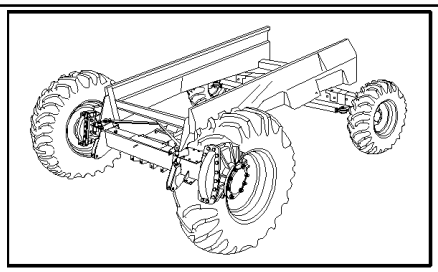

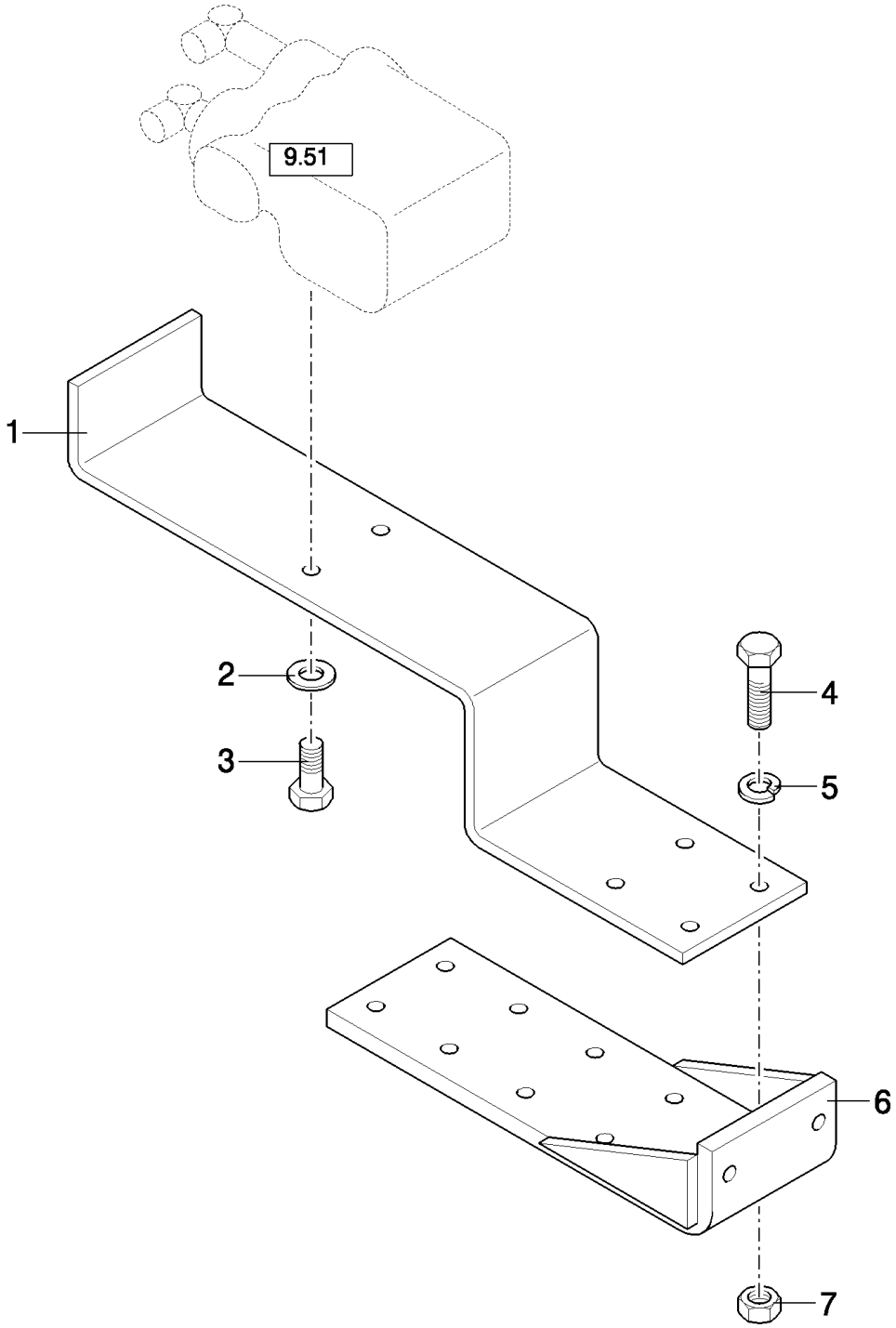

TX68 COMBINE - BASE UNIT

09.050(01) BRACKETS FOR VALVE

ссылка	Номер детали	Кол-во	Описание
1	9512209	1	BRACKET,
2	140045	2	WASHER, SPRING, Belleville, M10,
3	86977691	2	BOLT, Hex, 3/8"-16 x 1 1/2", G8,
4	88963	4	SCREW,
5	140015	8	WASHER, 6MM
6	9512254	1	BRACKET,
7	280736	4	NUT, LOCK, 5/16"-18, GC,

09.051(01) STEERING VALVE

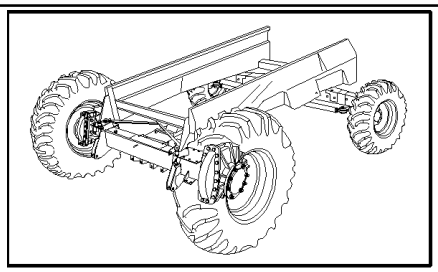

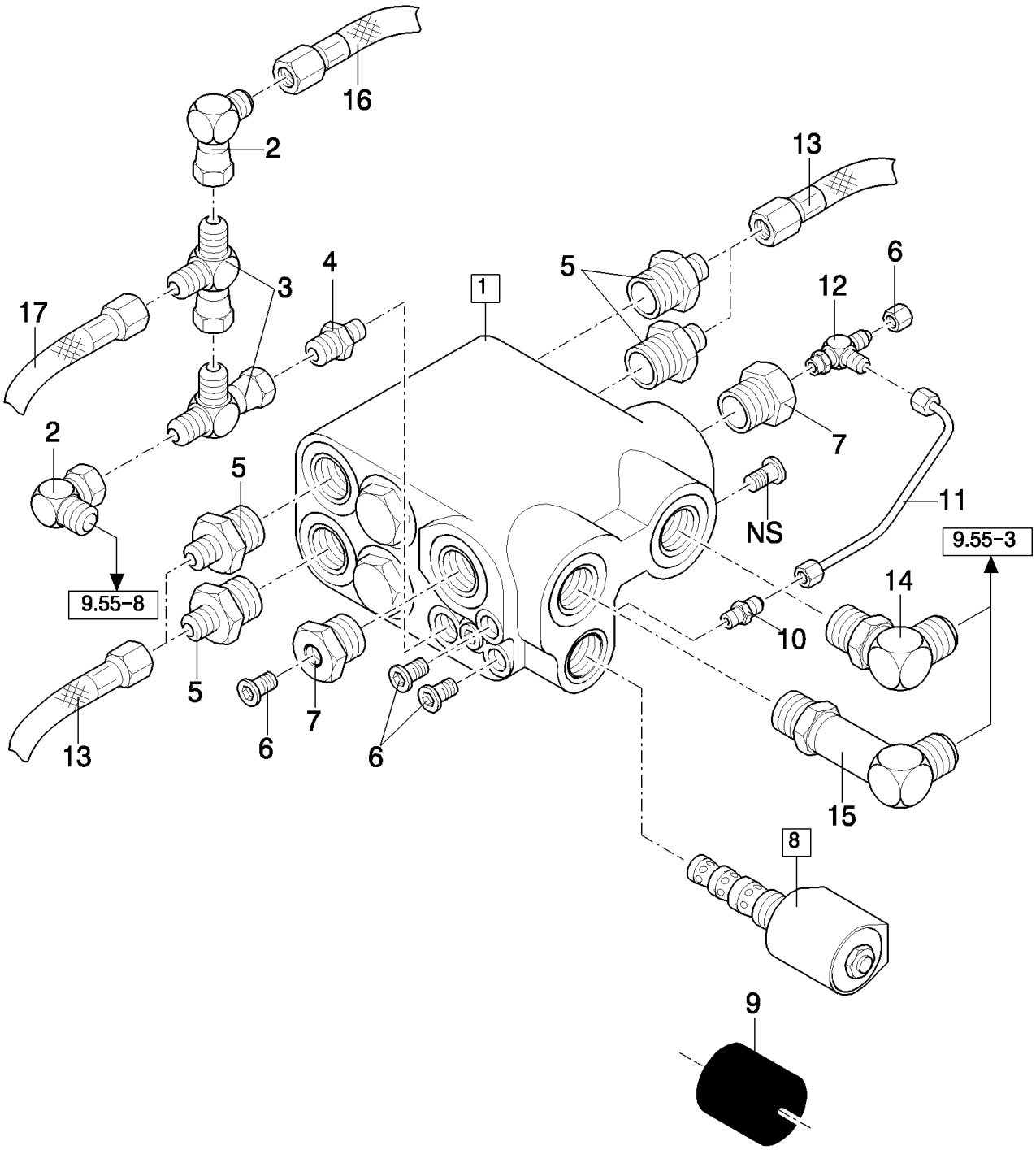

TX68 COMBINE - BASE UNIT

09.051(01) STEERING VALVE

ссылка	Номер детали	Кол-во	Описание
1	9512259	1	VALVE, HYDRAULIC, (2 to 12), FOR TX62-63-64-65-66 ONLY
1	84018846	1	VALVE, HYDRAULIC, (2 to 12), FOR TX67-68 ONLY
2	248974	2	ELBOW, 90є, 3/4"-16, 37є x 3/4"-16, 37є Fem Sw,
3	86511870	2	TEE, 37є, 3/4"-16 x 3/4"-16, Fem Sw Run,
4	9512223	1	CONNECTOR, HYD.,
5	176081	4	CONNECTOR, HYD., 3/4"-16, 37є x 1 1/16"-12, O-Ring,
6	86511869	1	CAP, 37є, 7/16"-20,
7	9512150	2	CONNECTOR, HYD.,
8	9512173	1	VALVE, HYDRAULIC, (9)
9	9512196	1	ELECTROMAGNET,
10	265235	1	CONNECTOR, HYD., 7/16"-20, 37є x 7/16"-20, O-Ring,
11	9512171	1	TUBE,
12	9512226	1	CONNECTION, 3 WAY,
13	9512240	4	HOSE, L:1778MM
14	322894	1	ELBOW, 90є, 1 1/16"-12, 37є x 1 1/16"-12, O-Ring,
15	9512237	1	ELBOW,
16	9512242	1	HOSE, L:1955MM
17	9512241	1	HOSE, HYDRAULIC, L:1828MM

09.052(01) HYDRAULIC MOTOR FIXING

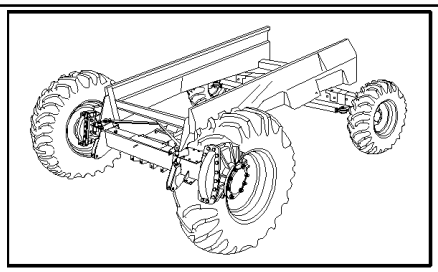

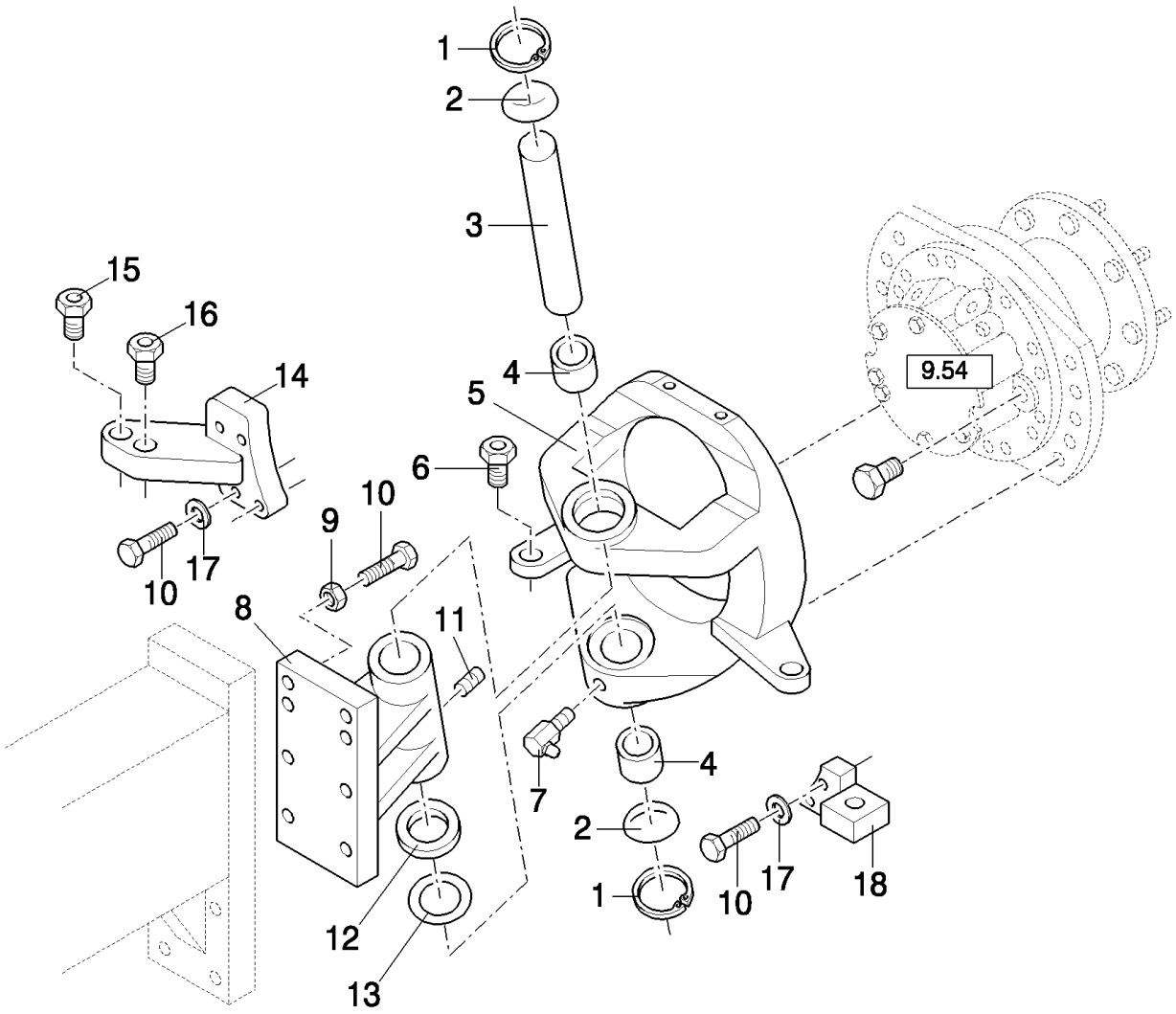

TX68 COMBINE - BASE UNIT

09.052(01) HYDRAULIC MOTOR FIXING

ссылка	Номер детали	Кол-во	Описание
1	9512178	4	CIRCLIP,
2	89512266	4	PLUG,
3	89512158	2	SHAFT,
4	9512162	4	BUSHING,
5	9512204	2	FRAME, , FOR TX62-63-64-65-66 ONLY
5	84018594	1	FRAME, LH, FOR TX67-68 ONLY
5	84018595	1	FRAME, RH, FOR TX67-68 ONLY
6	84018586	2	INSERT, THREADED, , FOR TX68 ONLY, -C5410
6	84026784	2	INSERT, THREADED, , FOR TX67-68 ONLY, D5410-
7	323713	4	NIPPLE, LUBE,
8	9512157	2	HOUSING,
9	84971	4	NUT,
10	280355	AR	BOLT, Hex, 5/8"-11 x 2 1/4", G8,
11	9512264	2	SCREW,
12	9512161	2	WASHER, THRUST,
13	9512167	2	WASHER,
14	9512255	1	PLUG, RH (15,16), FOR TX62-63-64-65-66 ONLY
15	84018660	1	INSERT, THREADED, , FOR TX62-63-64-65-66 ONLY
16	84018586	1	INSERT, THREADED, , FOR TX62-63-64-65-66 ONLY
17	140248	10	WASHER, 16MM, FOR TX62-63-64-65-66 ONLY
18	9512249	1	BRACKET, LH, FOR TX62-63-64-65-66 ONLY
18	9512248	1	BRACKET, RH, FOR TX62-63-64-65-66 ONLY

09.053(01) HYDRAULIC MOTOR FIXING

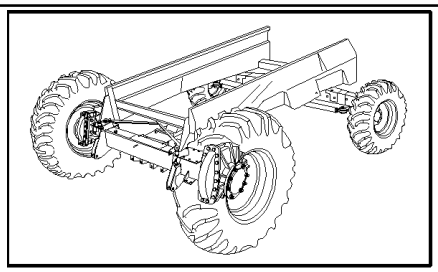

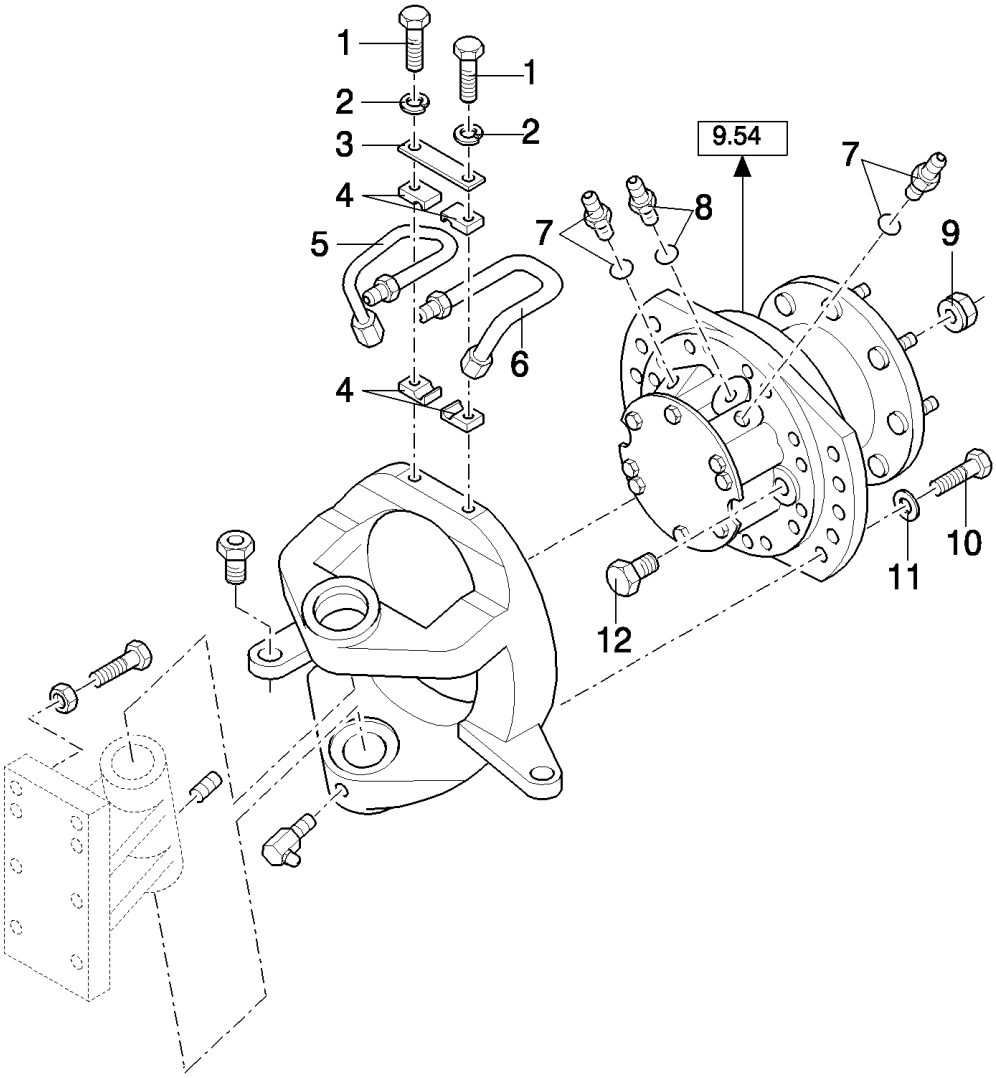

TX68 COMBINE - BASE UNIT

09.053(01) HYDRAULIC MOTOR FIXING

ссылка	Номер детали	Кол-во	Описание
1	9636711	4	BOLT, Hex, 5/16"-18 x 2", G5,
2	322358	4	WASHER, SPRING, Belleville, M8,
3	9512166	2	SUPPORT,
4	9512165	4	CLAMP,
5	9512168	2	TUBE, , FOR TX62-63-64-65-66 ONLY
5	84018589	2	TUBE, , FOR TX67-68 ONLY
6	9512169	2	TUBE, , FOR TX62-63-64-65-66 ONLY
6	84018590	2	TUBE, , FOR TX67-68 ONLY
7	176081	4	CONNECTOR, HYD., 3/4"-16, 37є x 1 1/16"-12, O-Ring,
8	84018587	2	CONNECTOR, HYD.,
9	9512180	16	NUT, , FOR TX62-63-64-65-66 ONLY
9	9512180	20	NUT, , FOR TX67-68 ONLY
10	88685	20	BOLT, Hex, 5/8"-11 x 1 1/2", G8, Full Thd, , FOR TX62-63-64-65-66 ONLY
10	84018593	16	SCREW, , FOR TX67-68 ONLY
11	9503273	20	WASHER, 17MM, FOR TX62-63-64-65-66 ONLY
11	84018592	16	WASHER, 17MM, FOR TX67-68 ONLY
12	84018588	2	PLUG,

09.054(01) SERVICE PARTS FOR HYDRAULIC MOTOR

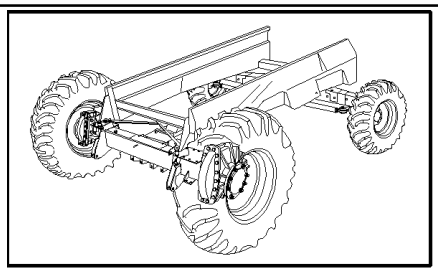

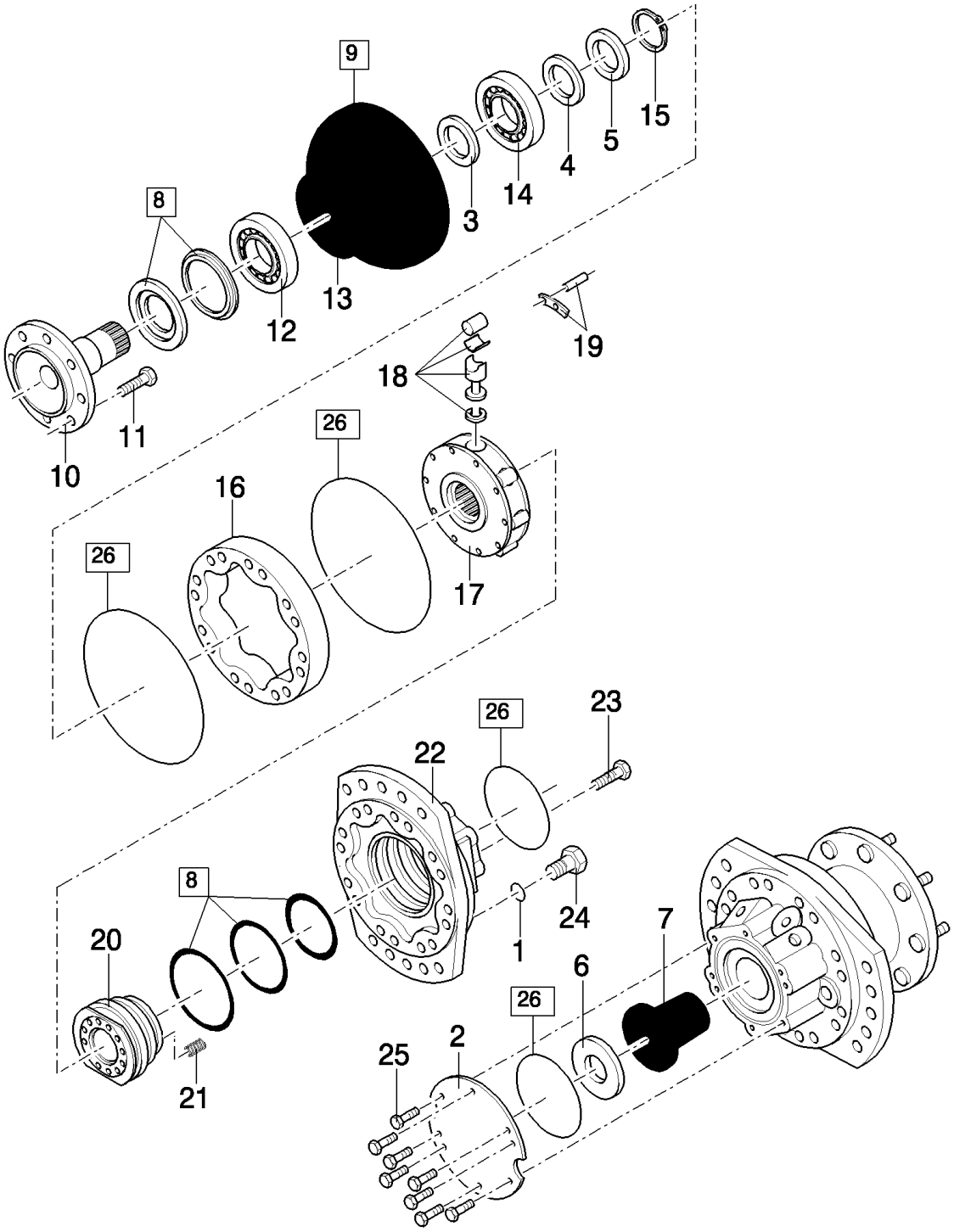

TX68 COMBINE - BASE UNIT

09.054(01) SERVICE PARTS FOR HYDRAULIC MOTOR

ссылка	Номер детали	Кол-во	Описание
	9512176	1	MOTOR, HYDRAULIC, 57 CID, FOR TX62-63-64-65-66 ONLY
	84018591	1	MOTOR, HYDRAULIC, 76 CID, FOR TX67-68 ONLY, -C5410
	84026793	1	MOTOR, HYDRAULIC, 76 CID, FOR TX67-68 ONLY, D5410-
	9512220	1	KIT, SEALS, (3 to 5,8), FOR TX62-63-64-65-66 ONLY
	84018658	1	KIT, SEALS, (3 to 5,8), FOR TX67-68 ONLY
1	84018633	2	ELEMENT, SEALING,
2	9512198	1	COVER, , FOR TX62-63-64-65-66 ONLY
2	84018654	1	COVER, , FOR TX67-68 ONLY
3	9512187	1	ELEMENT, SEALING, , FOR TX62-63-64-65-66 ONLY
3	84018639	1	ELEMENT, SEALING, , FOR TX67-68 ONLY, -C5410
3	84026794	1	ELEMENT, SEALING, , FOR TX67-68 ONLY, D5410-
4	9512217	1	SHIM, , FOR TX62-63-64-65-66 ONLY
4	84018641	1	PLATE, ADJUSTING, , FOR TX67-68 ONLY
5	9512189	1	SPACER, , FOR TX62-63-64-65-66 ONLY
5	84018642	1	SPACER, , FOR TX67-68 ONLY
6	84018655	1	SPACER, , FOR TX67-68 ONLY
7	9512202	1	ACCUMULATOR,
8	9512218	1	KIT, SEALS, (26), FOR TX62-63-64-65-66 ONLY
8	84018652	1	KIT, SEALS, (26), FOR TX67-68 ONLY, -C5410
8	84045560	1	KIT, SEALS, (26), FOR TX67-68 ONLY, D5410-
9	84018659	1	HOUSING, (10 to 15), FOR TX62-63-64-65-66 ONLY
9	84018644	1	HOUSING, (10 to 15), FOR TX67-68 ONLY
10	9512181	1	HUB, , FOR TX62-63-64-65-66 ONLY
10	84018636	1	HUB, , FOR TX67-68 ONLY
11	9512182	8	STUD, , FOR TX62-63-64-65-66 ONLY
11	9512182	10	STUD, , FOR TX67-68 ONLY
12	9512185	1	BEARING ASSY, , FOR TX62-63-64-65-66 ONLY
12	84018637	1	BEARING, ROLLER, , FOR TX67-68 ONLY
13	9512186	1	HOUSING, , FOR TX62-63-64-65-66 ONLY
13	84018638	1	HOUSING, , FOR TX67-68 ONLY
14	9512188	1	BEARING ASSY, , FOR TX62-63-64-65-66 ONLY
14	84018640	1	BEARING ASSY, , FOR TX67-68 ONLY
15	9512190	1	CIRCLIP, , FOR TX62-63-64-65-66 ONLY
15	84018643	1	CIRCLIP, , FOR TX67-68 ONLY
16	9512192	1	CAM, , FOR TX62-63-64-65-66 ONLY
16	84018645	1	CAM, , FOR TX67-68 ONLY
17	84018630	1	ROTOR, , FOR TX62-63-64-65-66 ONLY
17	84018646	1	ROTOR, , FOR TX67-68 ONLY
18	9512215	10	KIT, , FOR TX62-63-64-65-66 ONLY
18	84018647	8	KIT, , FOR TX67-68 ONLY
19	84018631	1	KIT, , FOR TX62-63-64-65-66 ONLY
19	84018650	1	KIT, , FOR TX67-68 ONLY
20	9512193	1	DISTRIBUTOR, , FOR TX62-63-64-65-66 ONLY
20	84018651	1	DISTRIBUTOR, , FOR TX67-68 ONLY

09.054(01) SERVICE PARTS FOR HYDRAULIC MOTOR

ссылка	Номер детали	Кол-во	Описание
21	9512195	8	SPRING, , FOR TX62-63-64-65-66 ONLY
21	9512195	9	SPRING, , FOR TX67-68 ONLY
22	84018632	1	COVER, , FOR TX62-63-64-65-66 ONLY
22	84018653	1	COVER, , FOR TX67-68 ONLY
23	84018635	16	SCREW, , FOR TX62-63-64-65-66 ONLY
23	84018656	12	SCREW, , FOR TX67-68 ONLY
24	84018634	2	SCREW,
25	374888	5	BOLT, Hex, M16 x 25, 8.8, Full Thd, Hex, M16 x 25, 8.8, Full Thd
26	9512219	1	KIT, SEALS, (4,5), FOR TX62-63-64-65-66 ONLY
26	84018657	1	KIT, SEALS, (4,5), FOR TX67-68 ONLY

09.055(01) HYDRAULIC AND ELECTRICAL EQUIPMENT

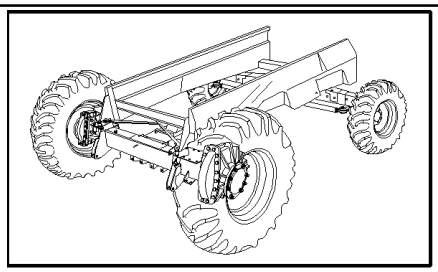

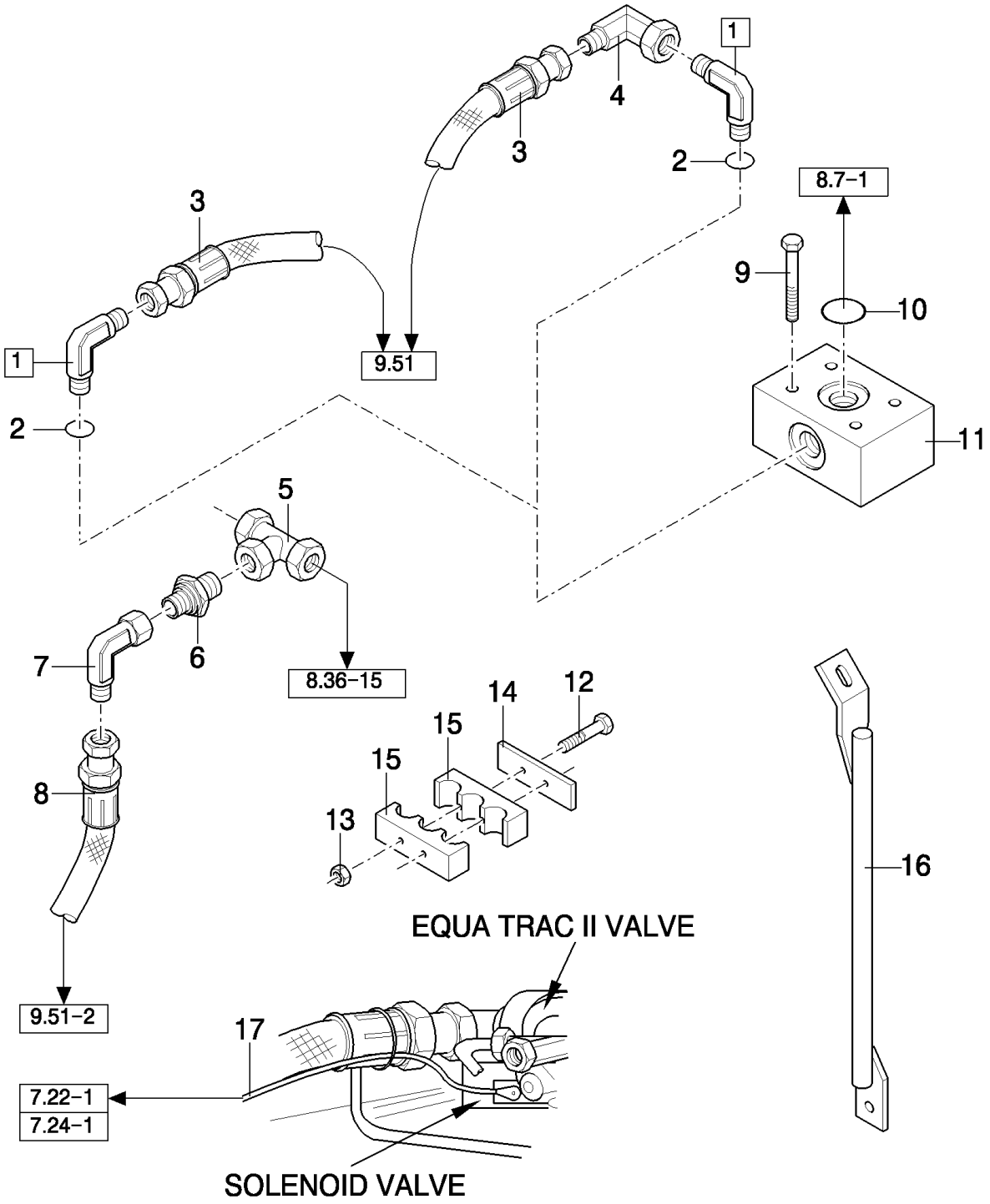

TX68 COMBINE - BASE UNIT

09.055(01) HYDRAULIC AND ELECTRICAL EQUIPMENT

ссылка	Номер детали	Кол-во	Описание
1	322894	2	ELBOW, 90є, 1 1/16"-12, 37є x 1 1/16"-12, O-Ring, (2)
2	167266	2	O-RING, 12-1, 90 Duro, .924 ID x .116" Thk,
3	9510873	2	HOSE, FLEXIBLE, L=142", FOR TX62-63-64-65-66 ONLY
3	84007287	2	HOSE, FLEXIBLE, L=151", FOR TX67-68 ONLY
3	84056197	2	HOSE, FLEXIBLE, L=159", FOR TX65-67-68 ONLY
4	219603	2	ELBOW, 90є, 1 1/16"-12, 37є x 1 1/16"-12, 37є Fem Sw, , FOR TX62-63-64-65-66 ONLY
5	9507672	1	CONNECTION, 3 WAY,
6	9512230	1	REDUCER,
7	9512231	1	ELBOW,
8	9510872	1	HOSE, HYDRAULIC, L=145"
8	84056198	1	HOSE, HYDRAULIC, L=150"
9	9818627	8	SCREW, , FOR TX62-63-64-65-66 ONLY
9	9818286	8	BOLT, Hex, 1/2"-13 x 3 1/2", G8, , FOR TX67-68 ONLY
10	353108	2	O-RING, -219, 70 Duro, 1.296" ID x .139" Thk, , FOR TX62-63-64-65-66 ONLY
10	235757	2	O-RING, -222, 90 Duro, 1.484" ID x .139" Thk, , FOR TX67-68 ONLY
11	9811684	2	ADAPTER, , FOR TX62-63-64-65-66 ONLY
11	9818288	2	ADAPTER, , FOR TX67-68 ONLY
12	338413	4	SCREW, Hex, M6 x 60, 8.8,
13	412152	4	NUT, LOCK, M6 x 1, Cl 8.8,
14	455534	3	SUPPORT,
15	455533	4	CLAMP,
16	9512258	1	BRACKET, , FOR TX62-63-64-65-66 ONLY
17	84012476	1	HARNESS, WIRE,

09.058(01) STEERING WHEELS

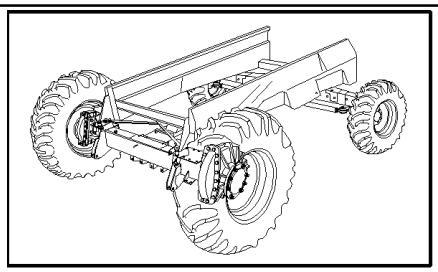

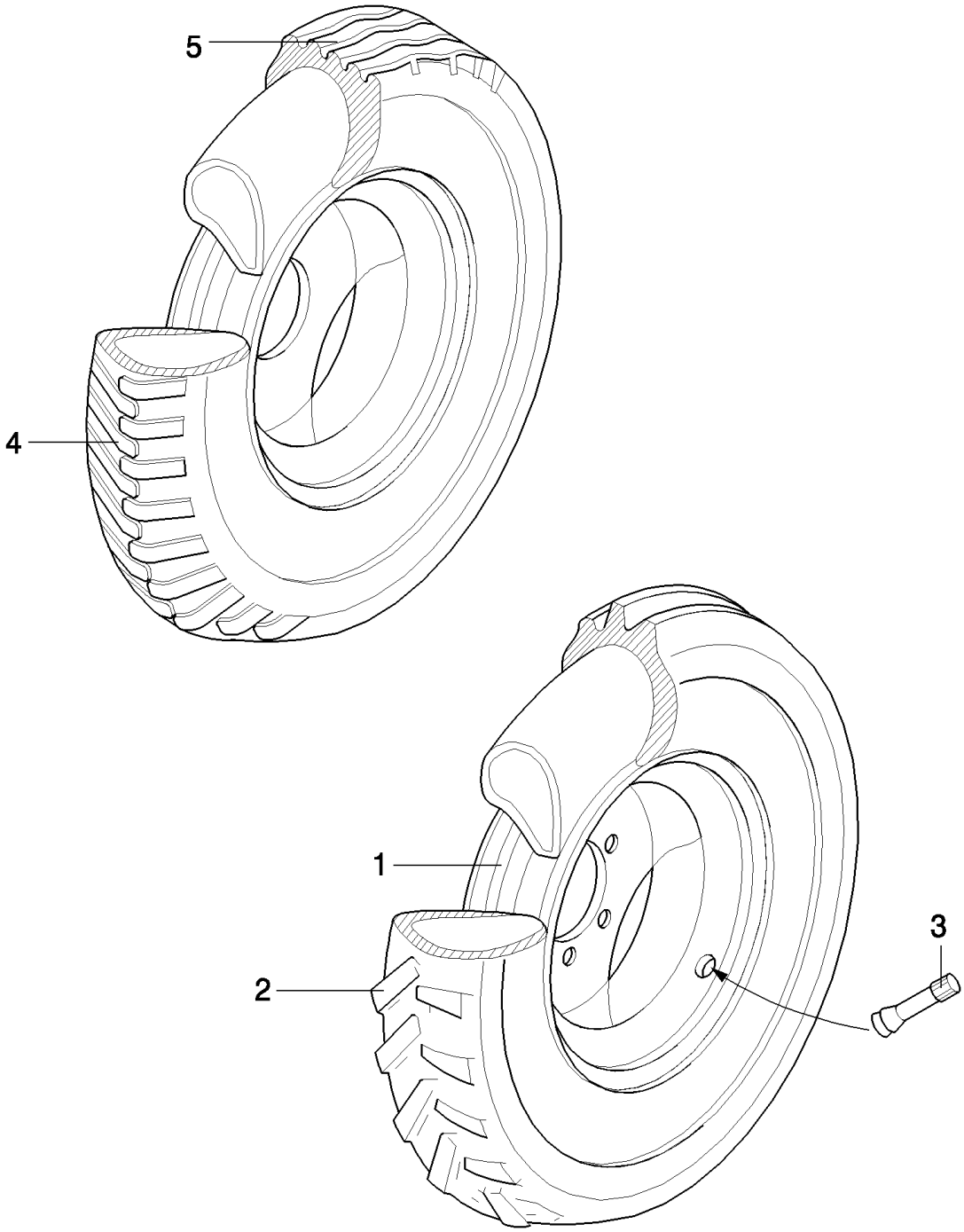

TX68 COMBINE - BASE UNIT

09.058(01) STEERING WHEELS

ссылка	Номер детали	Кол-во	Описание
1	84026230	2	RIM, , 17.5LRx24-150A8-STR-R-1, WITH HD STEERING AXLE ONLY, -C1169
1	84429223	2	RIM, , WITH HD STEERING AXLE ONLY, 17.5LRx24-150A8-STR-R-1, D1170-
1	84036027	2	RIM, , 14.9R28-128A8-STR-R-1, WITH HD STEERING AXLE AND TRACKS ONLY, -C1169
1	84429226	2	RIM, , WITH HD STEERING AXLE AND TRACKS ONLY, 14.9R28-128A8-STR-R-1, D1170-
1	84026230	2	RIM, , 540/65R24-146A8-DT820-R-1, WITH HD STEERING AXLE AND POWERED STEERING AXLE ONLY, -C1169
1	84429223	2	RIM, , WITH HD STEERING AXLE AND POWERED STEERING AXLE ONLY, 540/65R24-146A8-DT820-R-1, D1170-
1	84036007	2	RIM, , WITH HD STEERING AXLE ONLY, 550/60-22.5-12PR-TI-I-3, -C1169
1	84429225	2	RIM, , 550/60-22.5-12PR-TI-I-3, WITH HD STEERING AXLE ONLY, D1170-
1	84036005	2	RIM, , 400/70R20-145A8-FS24-I-1, WITH HD STEERING AXLE ONLY, -C1169
1	84429224	2	RIM, , 400/70R20-145A8-FS24-I-1, WITH HD STEERING AXLE ONLY, D1170-
1	84429207	2	RIM, , 400/70R20-145A8-FS24
2	9514625	2	TYRE/TIRE, , 17.5LRx24-150A8-STR-R-1, WITH HD STEERING AXLE ONLY
2	84036026	2	TYRE/TIRE, , 14.9R28-128A8-STR-R-1, WITH HD STEERING AXLE AND TRACKS ONLY
2	84026457	2	TYRE/TIRE, , WITH HD STEERING AXLE AND POWERED STEERING AXLE ONLY, 540/65R24-146A8-DT820-R-1
3	395448	2	VALVE STEM,
4	84026458	2	TYRE/TIRE, , WITH HD STEERING AXLE ONLY, 550/60-22.5-12PR-TI-I-3
5	84036004	2	TYRE/TIRE, , WITH HD STEERING AXLE ONLY, 400/70R20-145A8-FS24, 400/70R20-145A8-FS24-I-

09.059(01) STEERING WHEELS

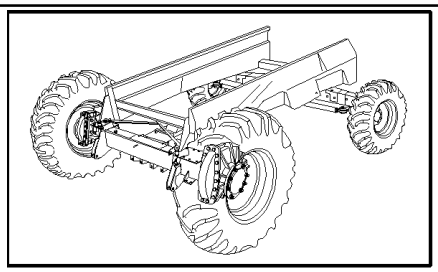

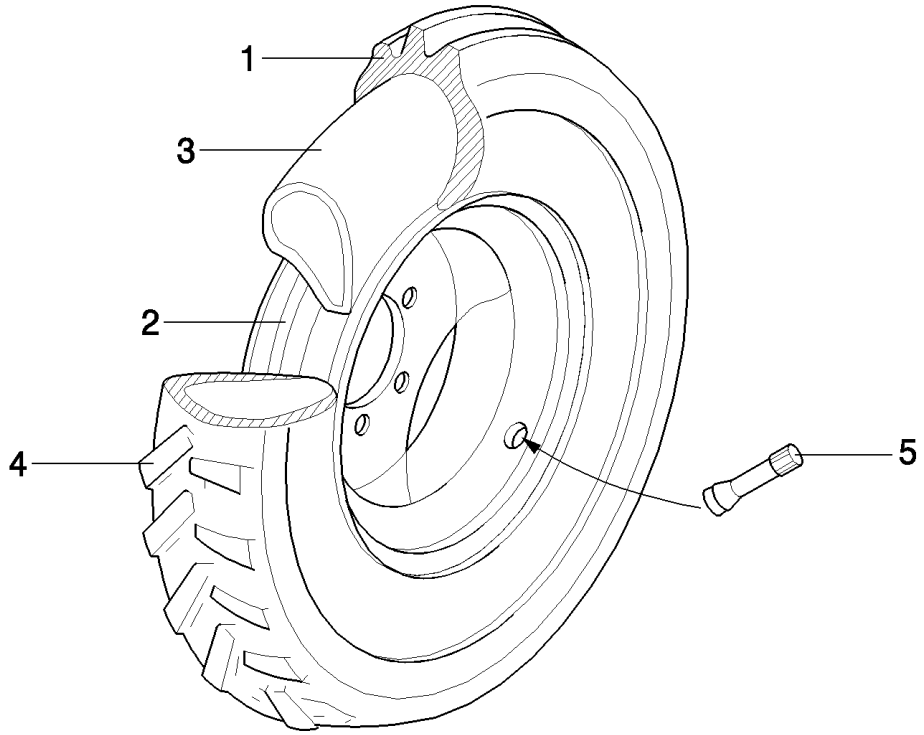

TX68 COMBINE - BASE UNIT

09.059(01) STEERING WHEELS

ссылка	Номер детали	Кол-во	Описание
1	439513	2	TYRE/TIRE, , WITH FIXED STEERING AXLE ONLY, 16.0/70x20-10PR-I1
1	84607492	2	TYRE/TIRE, , 18.4-30IND-14PR(57), 18.4-30IND-14PR(168.5)
2	750793	2	RIM, , WITH FIXED STEERING AXLE ONLY, 16.0/70x20-10PR-I1, 16.0/70x20-10PR-I3, -C1169
2	84429207	2	RIM, , 16.0/70x20-10PR-I3, 16.0/70x20-10PR-I1, WITH FIXED STEERING AXLE ONLY, D1170-
2	9831617	2	RIM, , WITH POWERED STEERING AXLE ONLY, 17.5LRx24-150A8-STR-R-1, 16.5/85x24-14PR-I3, -C1169
2	84429211	2	RIM, , 16.5/85x24-14PR-I3, 17.5LRx24-150A8-STR-R-1, WITH FIXED STEERING AXLE ONLY, D1170-
2	9510966	2	RIM, , WITH POWERED STEERING AXLE ONLY, 16.0/70x20-14PR-I3
2	84017551	2	RIM, , 18.4-30IND-14PR(168.5)
2	9831617	2	RIM, , 540/65R24-146A8-DT820-R-1, -C1169
2	84429204	2	RIM, , 18.4-30IND-14PR(57)
2	84429211	2	RIM, , 540/65R24-146A8-DT820-R-1, D1170-
3	913960	2	TUBE, , 16.5/85x24-14PR-I3, 16.0/70x20-14PR-I3, WITH POWERED STEERING AXLE ONLY
3	750356	2	TUBE, TYRE/TIRE, , 18.4-30IND-14PR(168.5), 18.4-30IND-14PR(57)
4	445960	2	TYRE/TIRE, , 16.0/70x20-10PR-I3, WITH FIXED STEERING AXLE ONLY
4	9510979	2	TYRE/TIRE, , WITH POWERED STEERING AXLE ONLY, 16.0/70x20-14PR-I3, 16.5/85x24-14PR-I3
4	84026457	2	TYRE/TIRE, , 540/65R24-146A8-DT820-R-1
4	9514625	2	TYRE/TIRE, , 17.5LRx24-150A8-STR-R-1, WITH POWERED STEERING AXLE ONLY
5	395448	2	VALVE STEM, , WITH FIXED STEERING AXLE ONLY, 16.0/70x20-10PR-I3, 16.0/70x20-10PR-I1
5	395448	2	VALVE STEM, , 540/65R24-146A8-DT820-R-1
5	395448	2	VALVE STEM, , 17.5LRx24-150A8-STR-R-1, WITH POWERED STEERING AXLE ONLY
5	9507108	2	VALVE STEM, , 18.4-30IND-14PR(168.5), 18.4-30IND-14PR(57)

09.060(01) COUNTERWEIGHTS

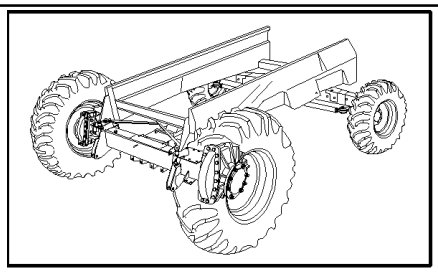

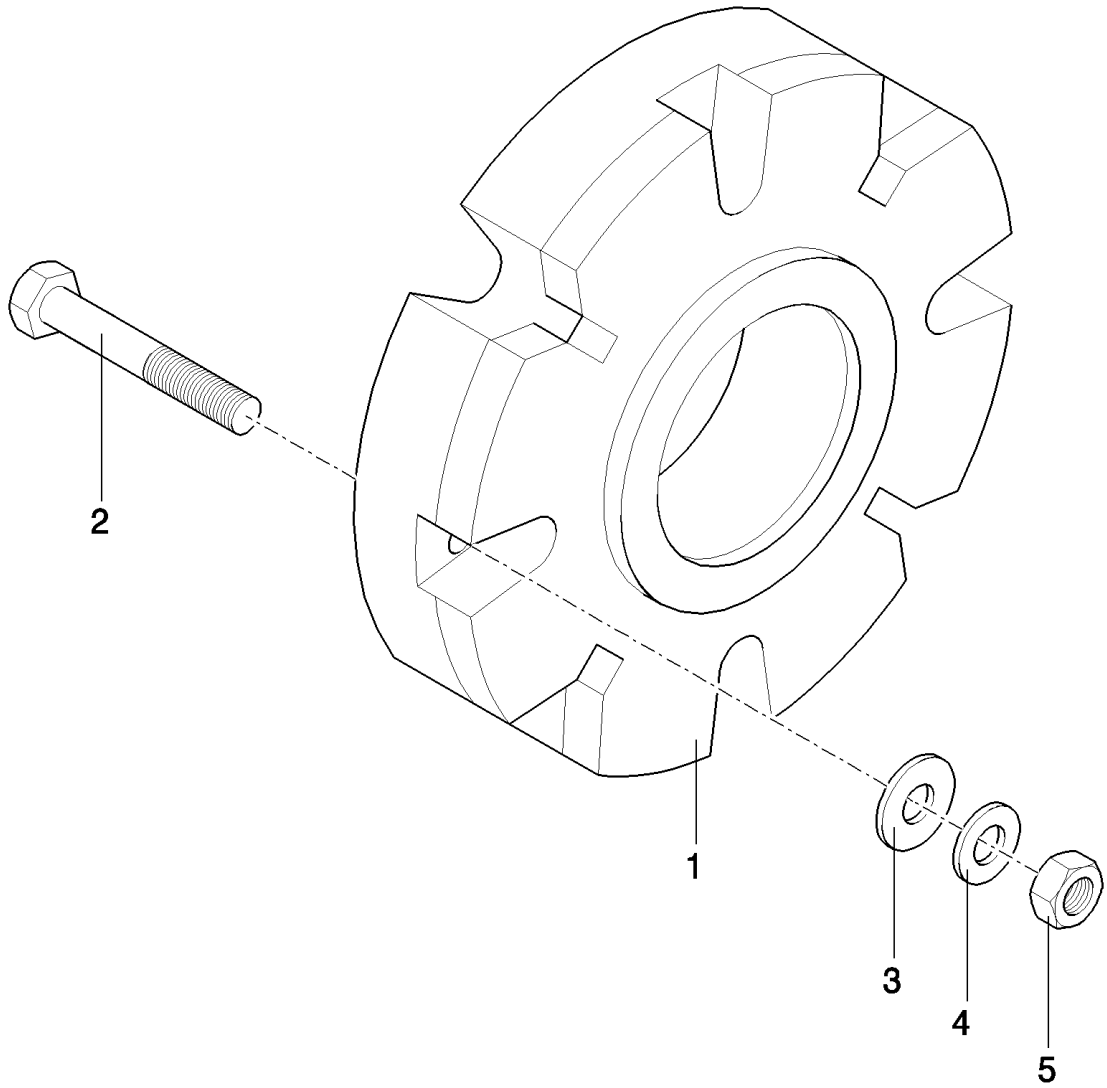

TX68 COMBINE - BASE UNIT

09.060(01) COUNTERWEIGHTS

ссылка	Номер детали	Кол-во	Описание
1	325121	AR	WEIGHT, , FOR 55KG
1	84018454	AR	WEIGHT, ADVANCE DEVICE, , FOR 50KG
2	9706717	8	BOLT, Hex, M12 x 70, 8.8, Full Thd, M12x70, FOR 55KG
2	385427	8	BOLT, Hex, M12 x 150, 8.8, , FOR 110KG
2	412585	8	BOLT, Hex, M12 x 230, 8.8, M12x230, FOR 165KG
2	374887	8	SCREW, Hex, M12 x 100, 8.8, , FOR 100KG
2	412676	8	BOLT, Hex, M12 x 180, 10.9, M12x180, FOR 200KG
2	84019085	8	BOLT, Hex, M12 x 260, 8.8, M12x260, FOR 300KG
2	84018914	8	BOLT, Hex, M12 x 320, 8.8, M12x320, FOR 400KG
3	140018	8	WASHER, M12 x 24 x 2.5,
4	140046	8	WASHER, Belleville, M12,
5	337475	8	NUT, M12, Cl 10,

09.061(01) COUNTERWEIGHTS

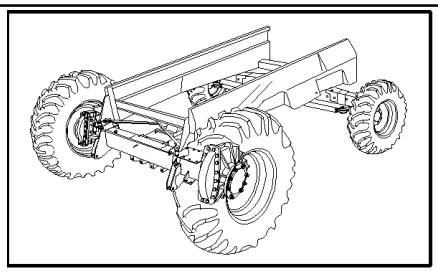

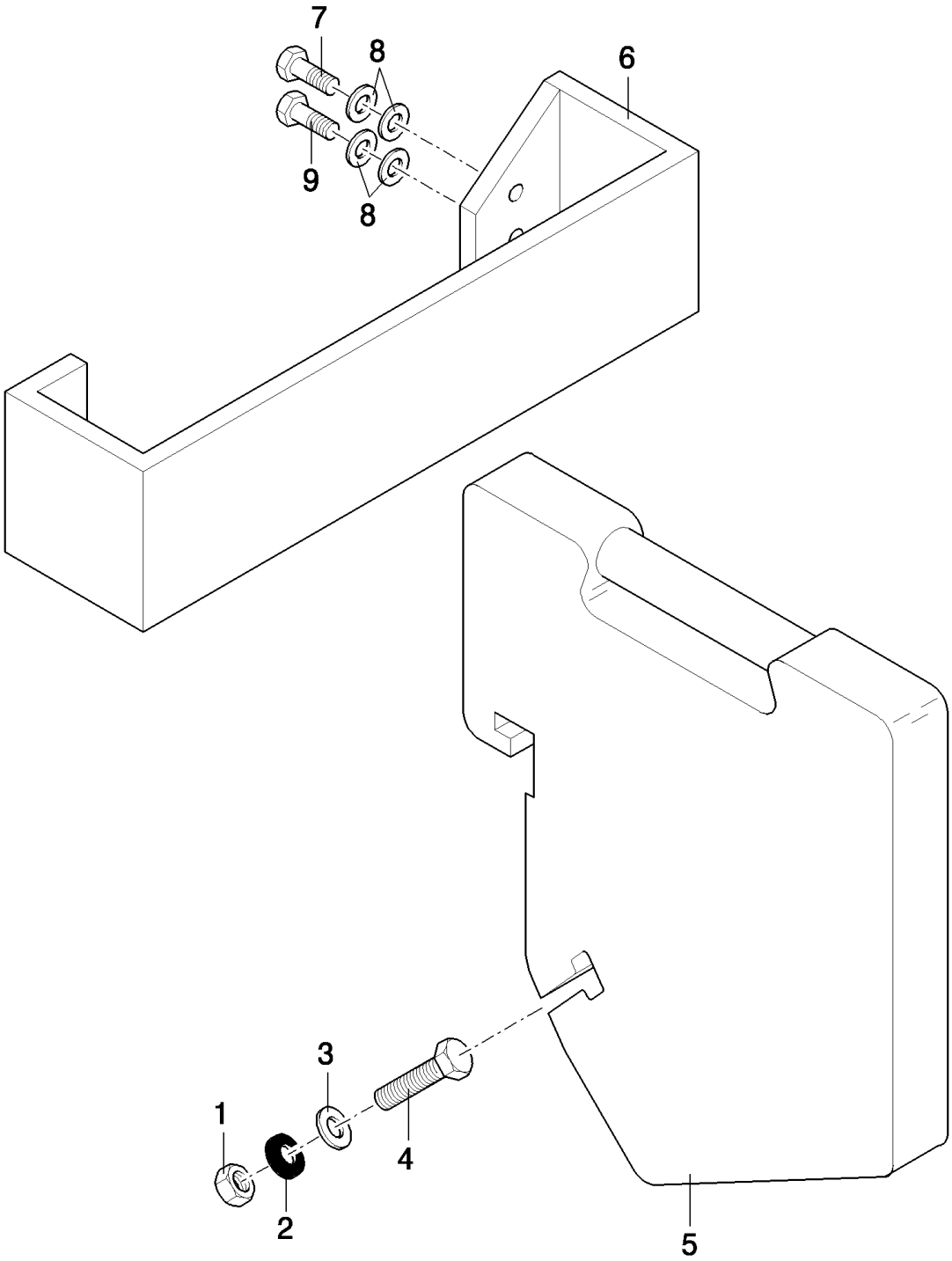

TX68 COMBINE - BASE UNIT

09.061(01) COUNTERWEIGHTS

ссылка	Номер детали	Кол-во	Описание
1	100020	1	NUT, M16, Cl 8,
2	451743	1	WASHER,
3	140048	1	WASHER, SPRING, Belleville, M16,
4	385923	1	SCREW, Hex, M16 x 55, 8.8, Full Thd, Hex, M16 x 55, 8.8, Full Thd
5	86516384	AR	WEIGHT,
6	84019373	1	SUPPORT, LH
6	84019372	1	SUPPORT, RH
7	43168	2	BOLT, Hex, M16 x 40, 8.8,
8	140048	4	WASHER, SPRING, Belleville, M16,
9	80120256	2	SCREW, M16x35

09.101(01) TRACKS

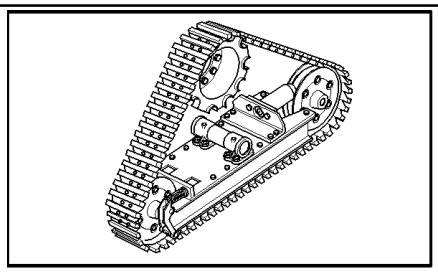

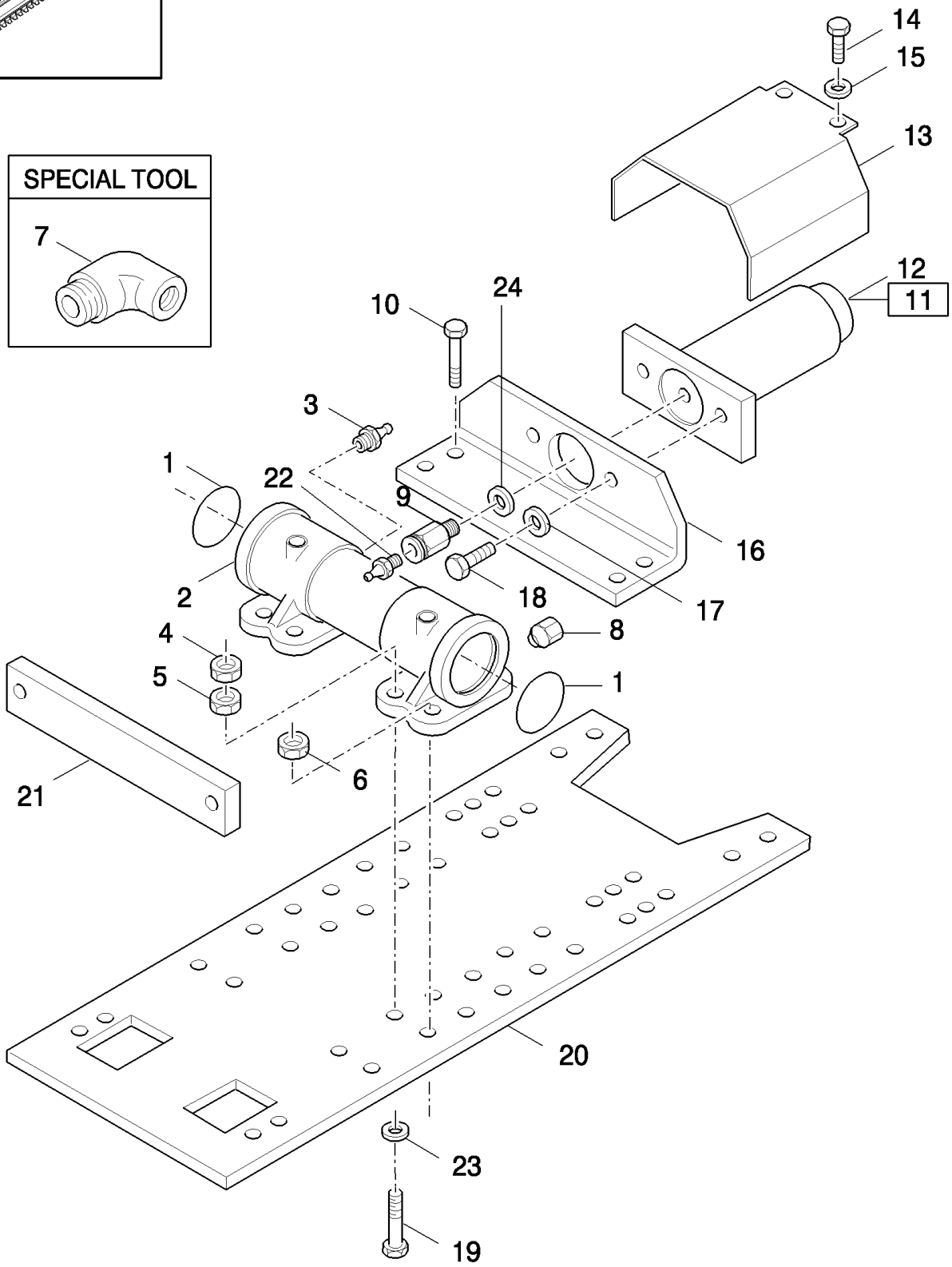

TX68 COMBINE - BASE UNIT

09.101(01) TRACKS

ссылка	Номер детали	Кол-во	Описание
1	14473280	4	O-RING, -349, 70 Duro, 4.475" ID x .210" Thk,
2	322380550	2	SUPPORT, , -C1998
2	322501350	2	SUPPORT, , D1999-
3	13407211	6	NIPPLE, LUBE, M10 x 1,
4	16980931	8	NUT, M20, -C1998
4	12577411	8	NUT, LOCK, M16 x 2, Cl 8, , D1999-
5	322380650	8	NUT, M20, -C1998
6	12577411	8	NUT, LOCK, M16 x 2, Cl 8,
7	423471	1	CONNECTOR, HYD.,
8	322378650	1	BALL JOINT, HEAD,
9	322378550	2	EXTENSION,
10	11119121	8	BOLT, Hex, M16 x 60, 8.8, , -C1998
11	322375500	2	PISTON, (12)
12	322376400	1	KIT, SEALS,
13	322376150	2	SHIELD,
14	15858921	4	BOLT, Hex, M16 x 12, 8.8, Full Thd, Hex, M16 x 12, 8.8, Full Thd
15	06455742	4	WASHER, LOCK, 6MM
16	322375450	2	SUPPORT, , FOR TX66-68 ONLY, -C1994
16	322389550	2	SUPPORT, , -C1998
17	10571977	4	RING,
18	11112821	4	BOLT, Hex, M12 x 40, 8.8, Full Thd,
19	15988331	8	BOLT, Hex, M20 x 1.5 x 60, 10.9, Full Thd, M20x1.5x70
19	11119321	AR	BOLT, Hex, M16 x 70, 8.8, , D1999-
19	11119131	AR	BOLT, Hex, M16 x 60, 10.9, , D1999-
20	322379050	2	PLATE, MOUNTING, , FOR TX66-68 ONLY, -C1994
20	322389450	2	PLATE, MOUNTING, , -C1998
20	322501450	2	PLATE, MOUNTING, , D1999-
21	322380150	2	BRACKET, , FOR TX66-67-68 ONLY, -C1998
22	322378450	2	NIPPLE, LUBE,
23	06455943	AR	WASHER, LOCK, , D1999-
24	322501250	2	WASHER, , D1999-

09.102(01) TRACKS

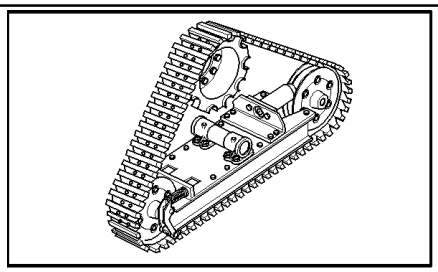

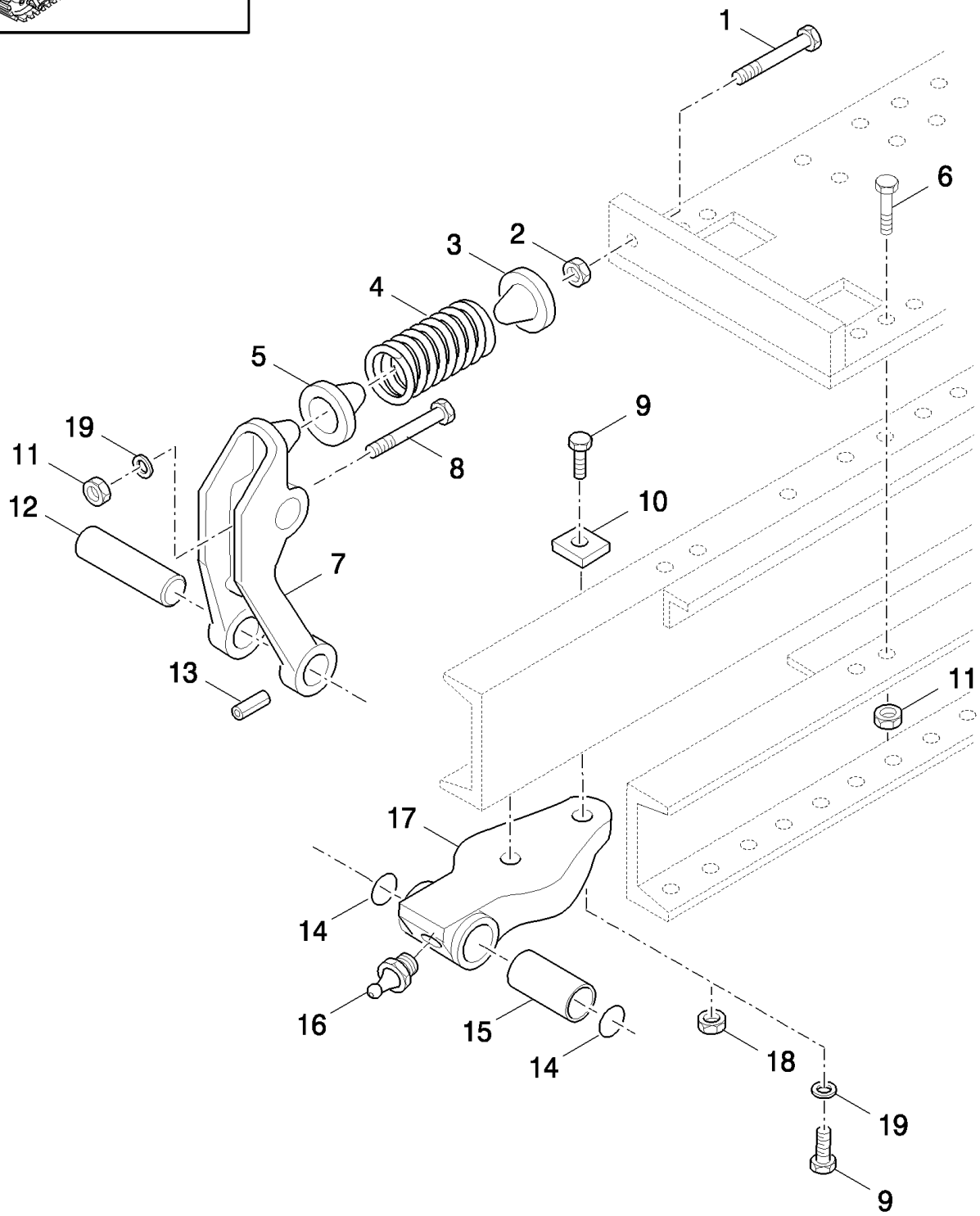

TX68 COMBINE - BASE UNIT

09.102(01) TRACKS

ссылка	Номер детали	Кол-во	Описание
1	15224521	4	BOLT, Hex, M20 x 90, 8.8, Full Thd, M12x90
2	12163511	4	NUT, M20, Cl 8,
3	322381950	4	CAP, FLANGE COVER,
4	322381850	4	SPRING,
5	322381750	4	CAP, FLANGE COVER,
6	11118731	36	BOLT, Hex, M16 x 45, 10.9, , -C1998
7	322380050	4	DRAWBAR, SWINGING, , -C1998
7	322501550	4	DRAWBAR, SWINGING, , D1999-
8	11119521	4	BOLT, Hex, M16 x 80, 8.8,
8	11119031	4	BOLT, Hex, M16 x 55, 10.9, Full Thd, Hex, M16 x 55, 10.9, Full Thd
9	11124921	8	BOLT, Hex, M20 x 60, 8.8,
9	11119934	6	SCREW, M16x100
10	322380450	8	PLATE, COVER, , -C1998
11	12577411	AR	NUT, LOCK, M16 x 2, Cl 8, , -C1998
12	322382050	4	PIN,
13	14613870	4	PIN, ROLL,
14	353587213	8	RING,
15	322380350	4	BUSHING,
16	13407211	4	NIPPLE, LUBE, M10 x 1,
17	322380250	4	SUPPORT, , -C1998
17	322501650	4	SUPPORT, , D1999-
18	12577721	8	NUT, LOCK, M20 x 2.5, Cl 10,
19	06455943	AR	WASHER, LOCK, , D1999-

09.103(01) TRACKS

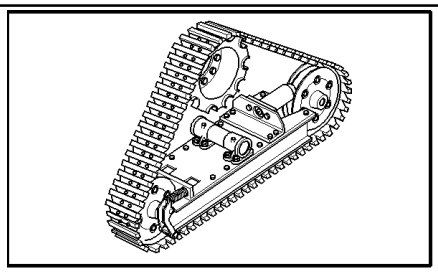

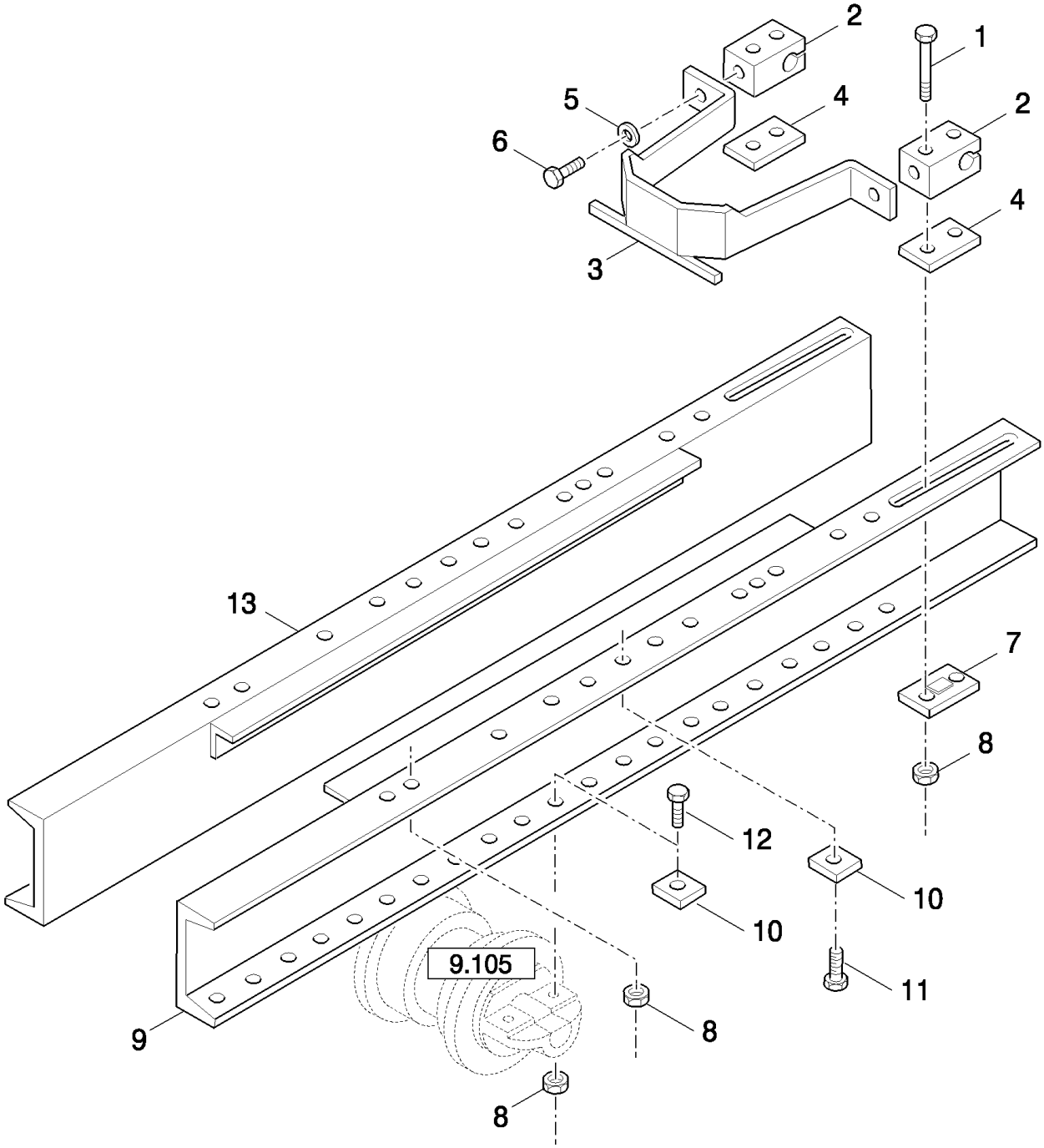

ссылка	Номер детали	Кол-во	Описание
1	11119921	8	BOLT, Hex, M16 x 100, 8.8, , FOR TX66-68 ONLY, -C1994
1	11120121	8	BOLT, Hex, M16 x 110, 8.8, M16x110
2	322379950	4	BLOCK,
3	322375350	2	BRACKET,
4	322389650	4	SHIM,
5	10557237	4	RING,
6	11124421	4	BOLT, Hex, M20 x 40, 8.8,
7	322375250	4	PLATE, COVER,
8	12577411	4	NUT, LOCK, M16 x 2, Cl 8,
9	322378950	2	BODY, , FOR TX66-68 ONLY, -C1994
9	322389850	2	FRAME,
10	140039	8	WASHER,
11	11119331	8	SCREW, Hex, M16 x 70, 10.9,
12	11119321	AR	BOLT, Hex, M16 x 70, 8.8,
13	322378850	2	BODY, , FOR TX66-68 ONLY, -C1994
13	322389750	2	FRAME,

09.103A(01) TRACKS

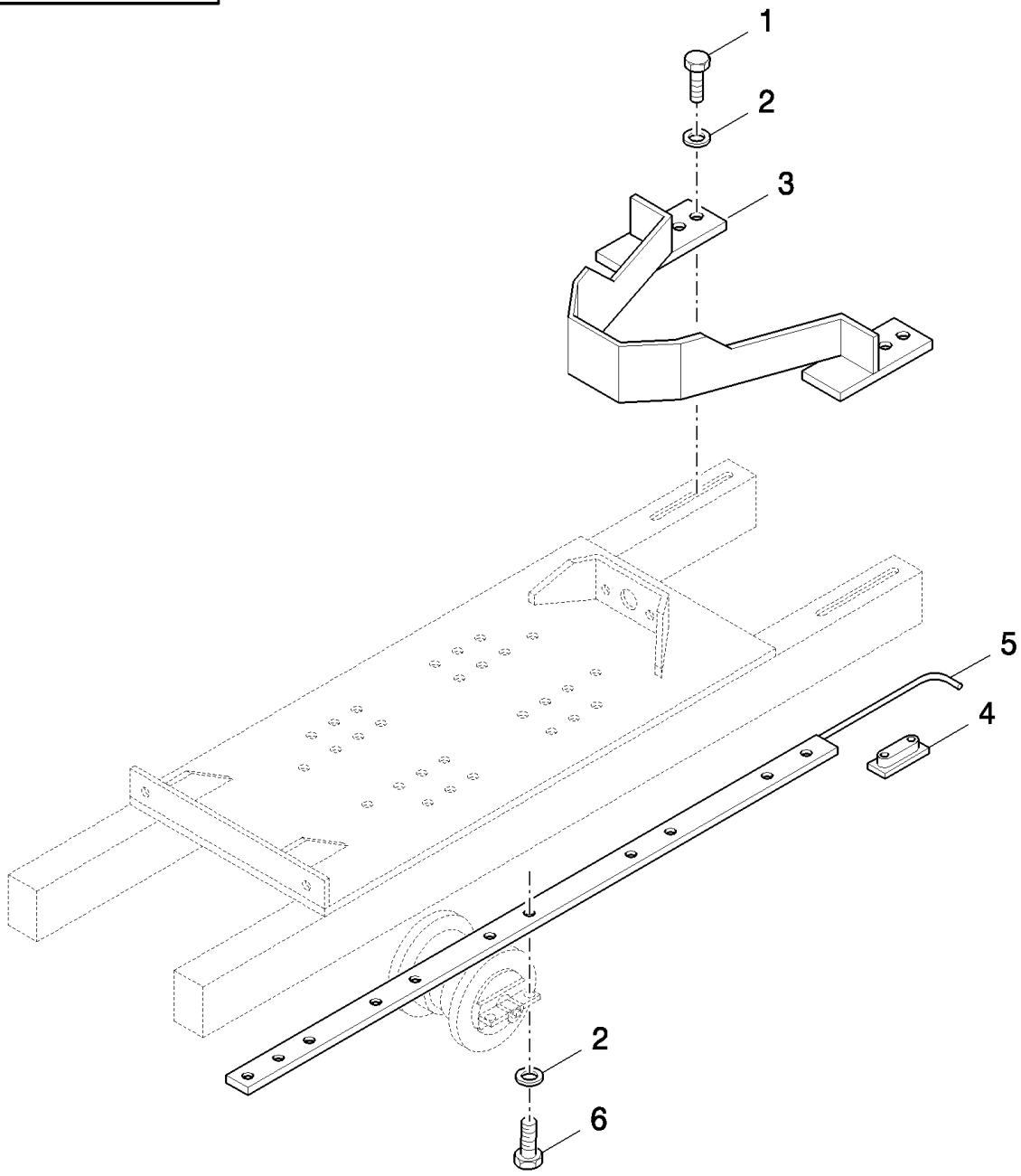

ссылка	Номер детали	Кол-во	Описание
1	11119534	8	BOLT, Hex, M16 x 80, 10.9,
2	06455943	AR	WASHER, LOCK,
3	322501950	2	BRACKET,
4	322501850	4	PLATE,
5	322501750	4	PLATE, FIXING,
6	11119321	AR	BOLT, Hex, M16 x 70, 8.8,

09.104(01) TRACKS

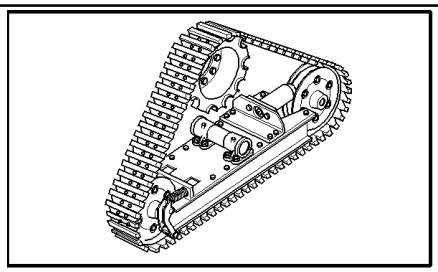

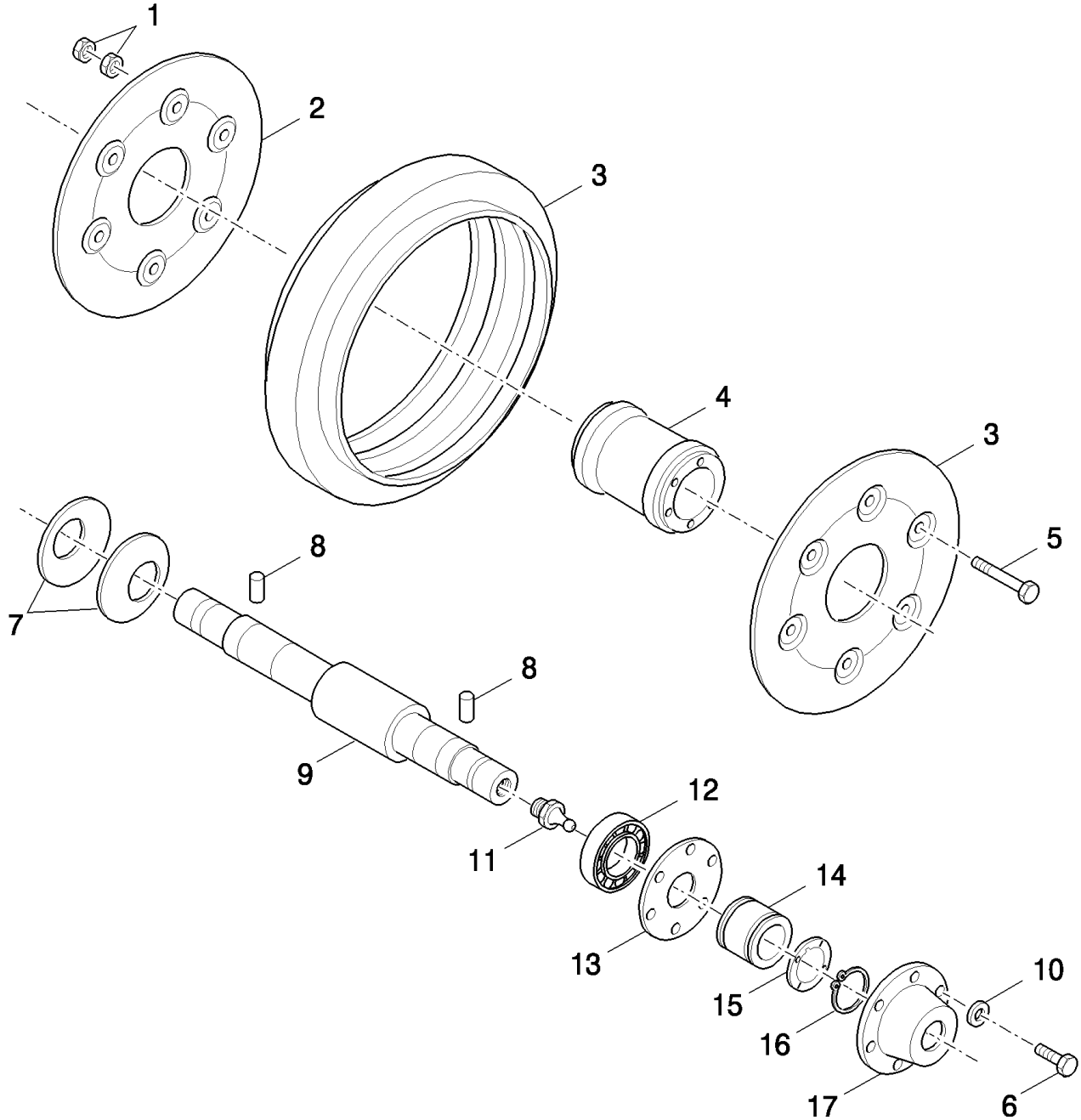

ссылка	Номер детали	Кол-во	Описание
	322382800	4	WHEEL, IDLER, DIA.:430 (1 to 17)
	322382900	4	WHEEL, IDLER, DIA.:490 (1 to 17)
1	12163211	AR	NUT, M14, Cl 8, M14
2	322381050	4	FLANGE, DIA.:490
2	322380850	4	FLANGE, DIA.:430
3	322380950	4	RING, DIA.:490
3	322380750	4	RING, DIA.:430
4	322381150	4	HUB,
5	11117831	24	BOLT, Hex, M14 x 130, 10.9, M14x130
7	340356054	8	SPRING-DISC,
8	322381550	8	PIN, ROLL,
9	322381250	4	PIN,
10	12605671	48	WASHER, LOCK, Int Tooth, M10,
11	13407211	4	NIPPLE, LUBE, M10 x 1,
12	26800580	8	BEARING ASSY,
13	322382150	8	RING,
14	322382250	8	BELLOWS,
15	322381450	8	RING,
16	11068671	8	RING, LOCKING,
17	322381650	8	CAP, FLANGE COVER,
6	11106221	48	BOLT, Hex, M10 x 25, 8.8, Full Thd,

09.105(01) TRACK ROLLERS

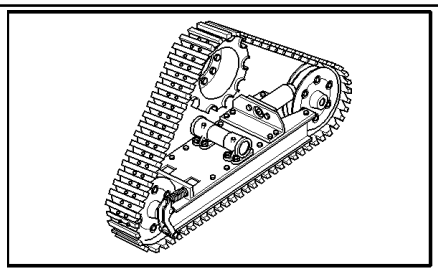

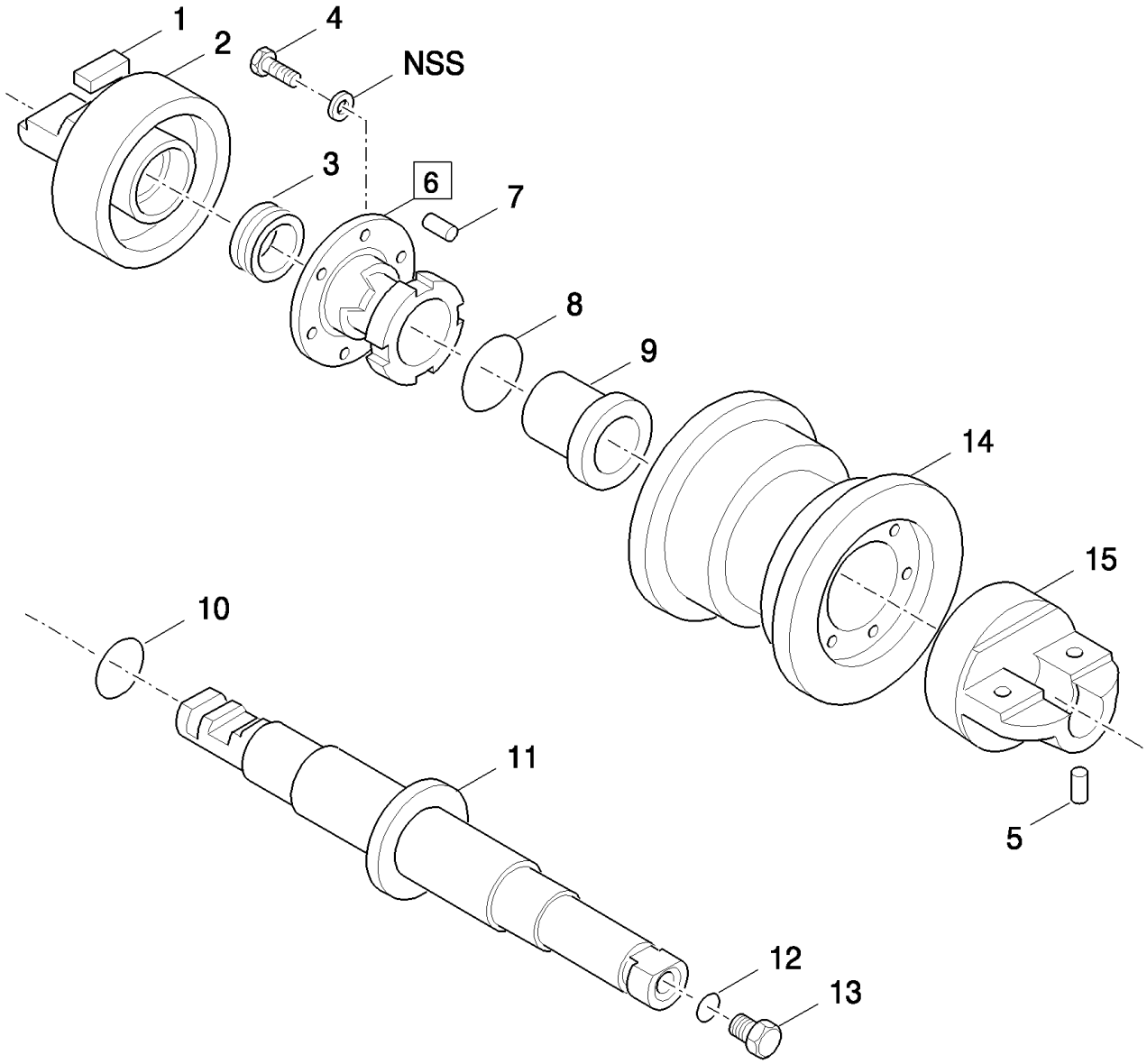

09.105(01) TRACK ROLLERS

ссылка	Номер детали	Кол-во	Описание
	76029465	4	TRACK ROLLER, LH AND RH
	76029464	10	TRACK ROLLER,
1	592509	12	KEY,
2	592517	12	SUPPORT,
3	79007451	24	SEAL,
4	14233434	AR	SCREW,
5	10489510	24	PIN,
6	79103909	12	FLANGE, (7,9)
7	76003935	12	DOWEL,
8	14465680	24	O-RING, -238, 70 Duro, 3.484" ID x .139" Thk,
9	79103911	12	BUSHING,
10	560017	12	GASKET,
11	76029463	12	SHAFT, ROLLER,
12	560017	12	GASKET,
13	4982082	12	PLUG,
14	76004898	4	TRACK ROLLER, LH AND RH
14	76004900	10	TRACK ROLLER,
15	592519	12	SUPPORT,

09.105A(01) TRACK ROLLERS

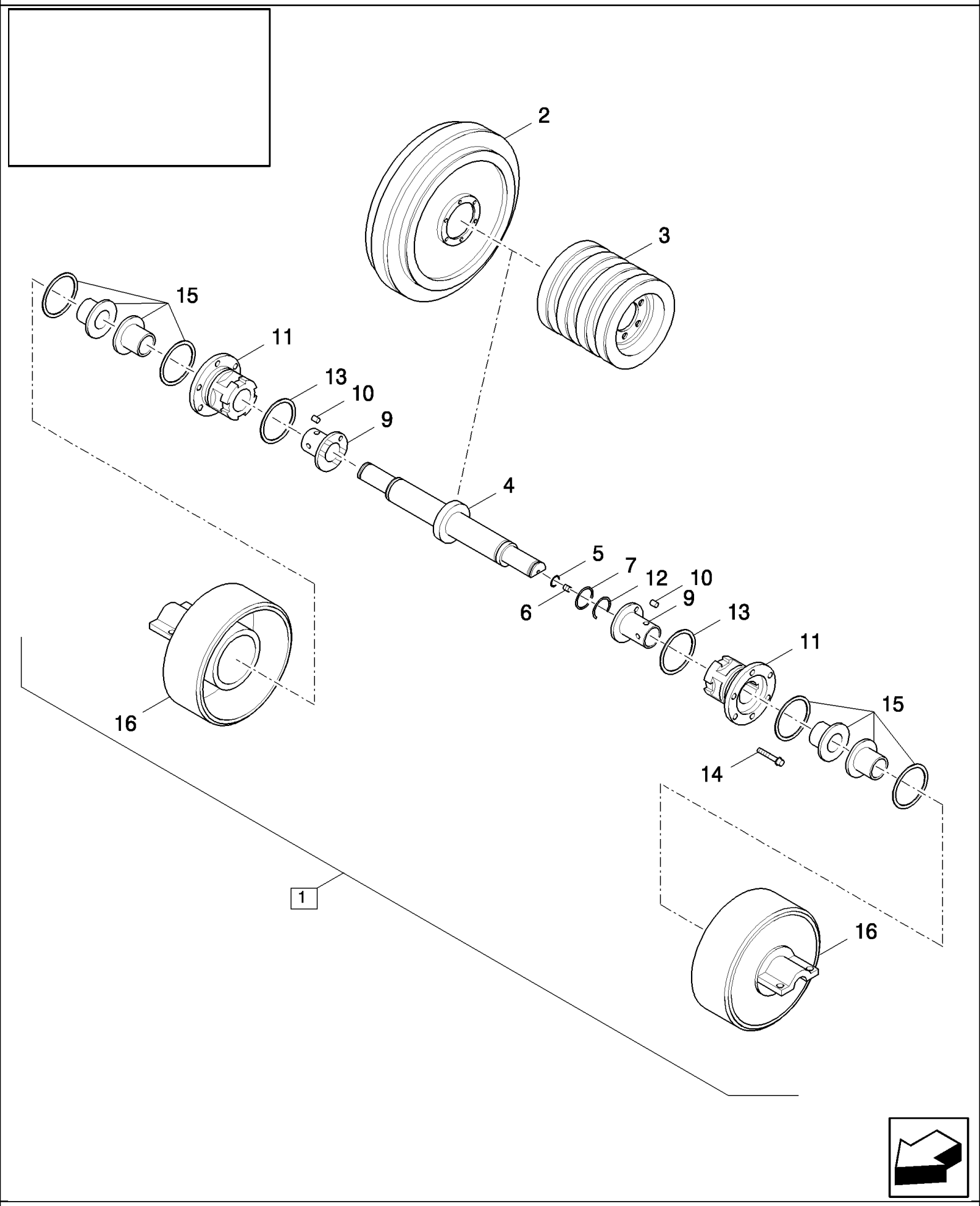

09.105A(01) TRACK ROLLERS

ссылка	Номер детали	Кол-во	Описание
1	322581900	4	WHEEL, IDLER, RH, LH (2,4 to 16)
1	322582000	14	TRACK ROLLER, CENTER (3 to 16)
2	300134325	4	WHEEL, IDLER, RH, LH
3	300134326	14	TRACK ROLLER, CENTER
4	322583650	1	SHAFT,
5	5135735	1	O-RING, -017, Cl 9, .676" ID x .070" Thk,
6	322583550	1	PLUG,
7	14464380	1	O-RING, -225, 70 Duro, 1.859" ID x .139" Thk,
8	313461800	2	HUB, (9 to 11)
9	300134620	2	BUSHING,
10	300134619	2	PIN, ROLL,
11	300134618	2	HUB,
12	300134624	1	RING, LOCKING,
13	14465680	2	O-RING, -238, 70 Duro, 3.484" ID x .139" Thk,
14	300134625	12	SCREW,
15	311816500	2	GASKET,
16	300134626	2	SUPPORT,

09.106(01) TRACKS

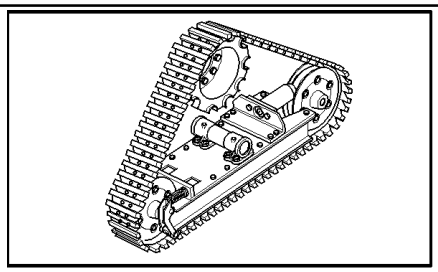

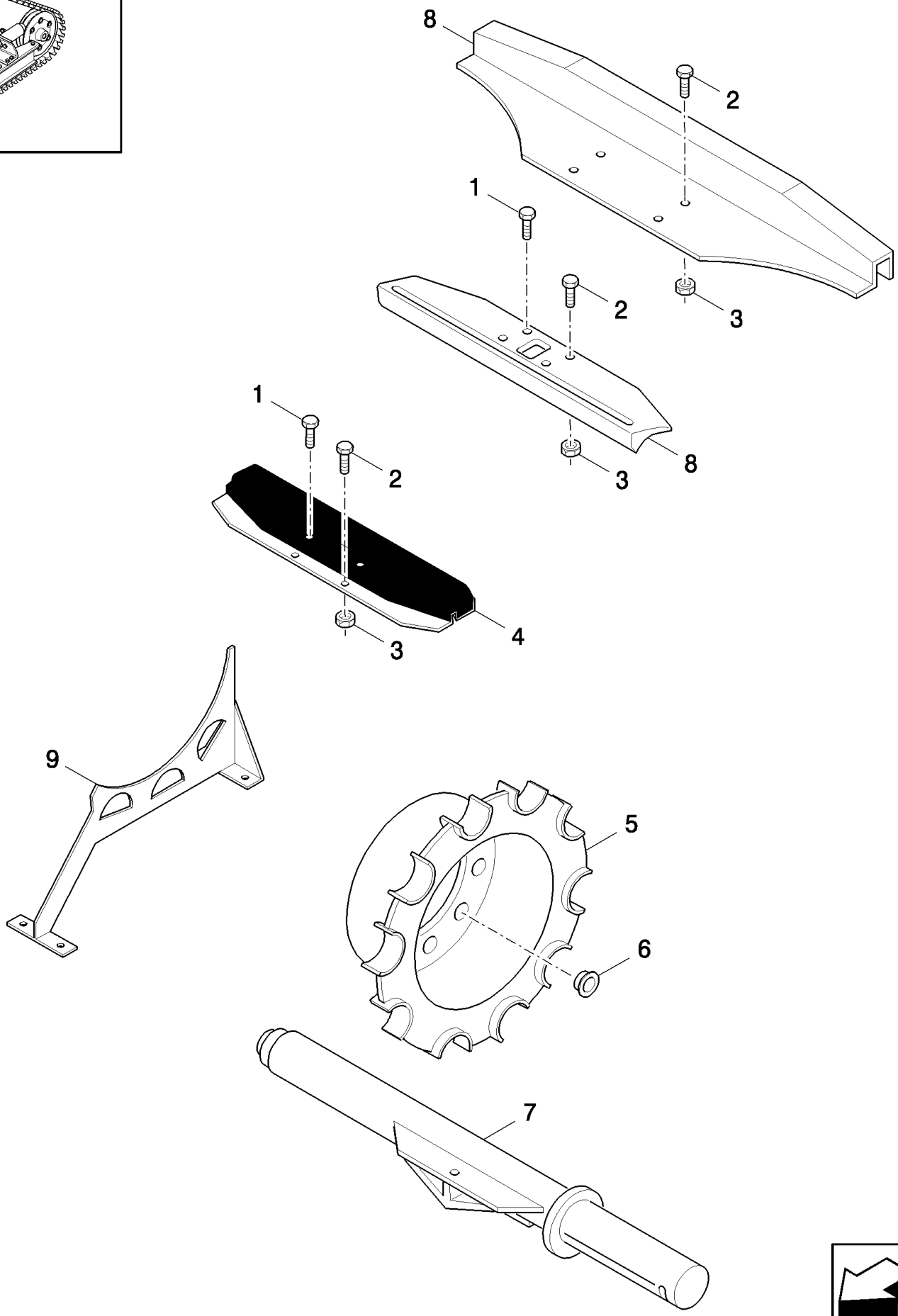

TX68 COMBINE - BASE UNIT

09.106(01) TRACKS

ссылка	Номер детали	Кол-во	Описание
1	15835231	AR	SCREW, Hex, M16 x 1.5 x 70, 10.9,
2	15981031	AR	BOLT, Hex, M16 x 1.5 x 55, 10.9,
3	300135424	AR	NUT, M16
4	322401550	AR	PLATE, TRACK, L:700MM
4	322401450	AR	PLATE, TRACK, L:800MM, -C1998
4	320702250	AR	PAD, SLIDING, L:800MM, D1999-
4	320702350	2	PAD, SLIDING, L:800MM, FOR CHAIN LOCKING ONLY, D1999-
4	322512950	AR	PAD, SLIDING, L:900MM, FOR CHAIN LOCKING ONLY
4	322513050	2	PAD, SLIDING, L:900MM
5	322379850	1	GEAR, 213 H110, FOR TX68 ONLY, -C1994
5	322379650	1	GEAR, 211 H210, FOR TX66 ONLY, -C1994
5	322384350	1	GEAR, 211 H160, FOR TX62-64-65 ONLY, -C1994
5	322379750	1	GEAR, 213 H60, FOR TX67-68 ONLY, -C1998
5	322379550	1	GEAR, 211 H110, FOR TX62-63-64-65-66 ONLY, -C1998
5	322389950	1	GEAR, 211 H160, FOR TX66 ONLY, -C1998
5	322392350	1	GEAR, Z=11, H:110MM
5	322500050	1	GEAR, Z=11, H:160MM
5	322500650	2	GEAR, Z=13, H:110MM
6	322382450	4	WASHER,
7	322378350	1	AXLE, FRONT, L:1349MM, FOR TX66-68 ONLY, -C1994
7	322377150	1	AXLE, FRONT, L:1249MM, FOR TX62-64-65 ONLY, -C1994
7	322378250	2	AXLE, FRONT, L:1299MM, FOR TX67-68 ONLY, -C1998
7	322378150	1	AXLE, FRONT, L:1249MM, FOR TX66 ONLY, -C1998
7	322390050	1	AXLE, FRONT, L:1199MM, FOR TX62-63-64-65 ONLY, -C1998
7	322378250	1	AXLE, FRONT, L:1299MM, FOR TX66 ONLY
7	322502050	1	AXLE, FRONT, L:1169MM, D1999-
7	322502150	1	AXLE, FRONT, L:1219MM(415), D1999-
7	322502850	2	AXLE, FRONT, L:1219MM(465), D1999-
8	322401850	AR	PLATE, TRACK, L:700MM
8	322401950	AR	PLATE, TRACK, L:800MM, -C1998
8	320695250	AR	PAD, SLIDING, L:800MM, D1999-
8	320695350	2	PAD, SLIDING, L:800MM, FOR CHAIN LOCKING ONLY, D1999-
8	322513150	AR	PLATE, TRACK, L:900MM, D1999-
8	322513250	2	PAD, SLIDING, L:900MM, FOR CHAIN LOCKING ONLY, D1999-
9	322502550	2	SUPPORT, Z=11, D1999-
9	322502650	2	SUPPORT, Z=13, D1999-
2	11391534	AR	SCREW, Hex, M16 x 1.5 x 45, 10.9, Full Thd,

09.107(01) TRACKS, CHAIN

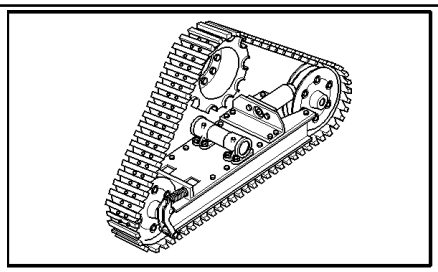

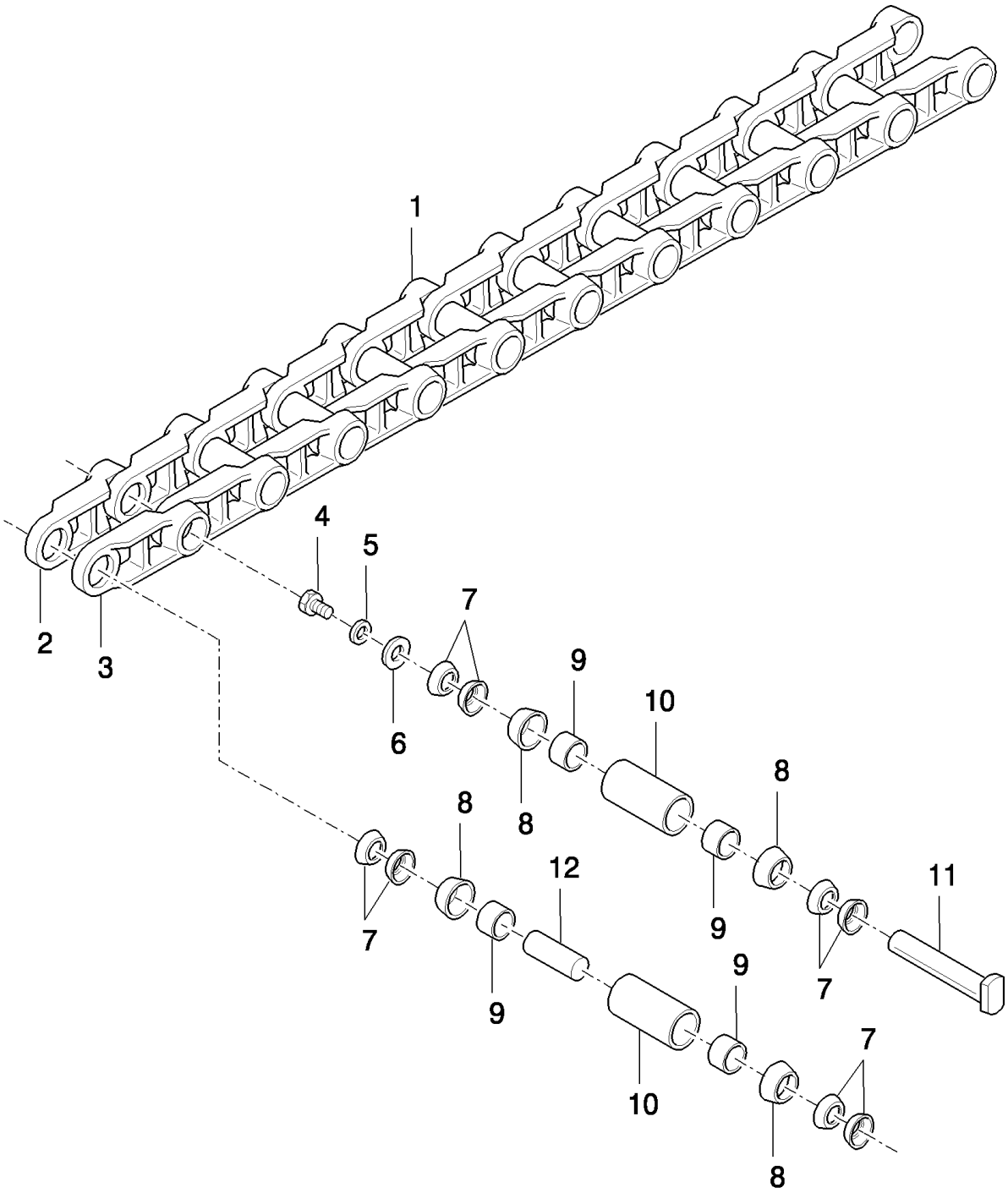

09.107(01) TRACKS, CHAIN

ссылка	Номер детали	Кол-во	Описание
	84037041	1	CHAIN, 37 CHAINS
	80448558	1	CHAIN, 38 CHAINS
1	80450444	AR	RH
2	80450449	1	LINK, CONNECTING, RH
3	80450448	AR	LINK BLOCK, LH
4	120128	1	PIPE, Nipple, 3/8" NPT x 3 1/2", M20x1.5x30
5	378382	1	WASHER, LOCK,
6	378383	1	RING,
7	80450445	AR	CUP,
8	80450446	AR	GASKET,
9	80450447	AR	SPACER,
10	424078	AR	BUSHING,
11	378385	1	SHAFT,
12	378387	AR	SPINDLE,

09.107A(01) TRACKS, CHAIN

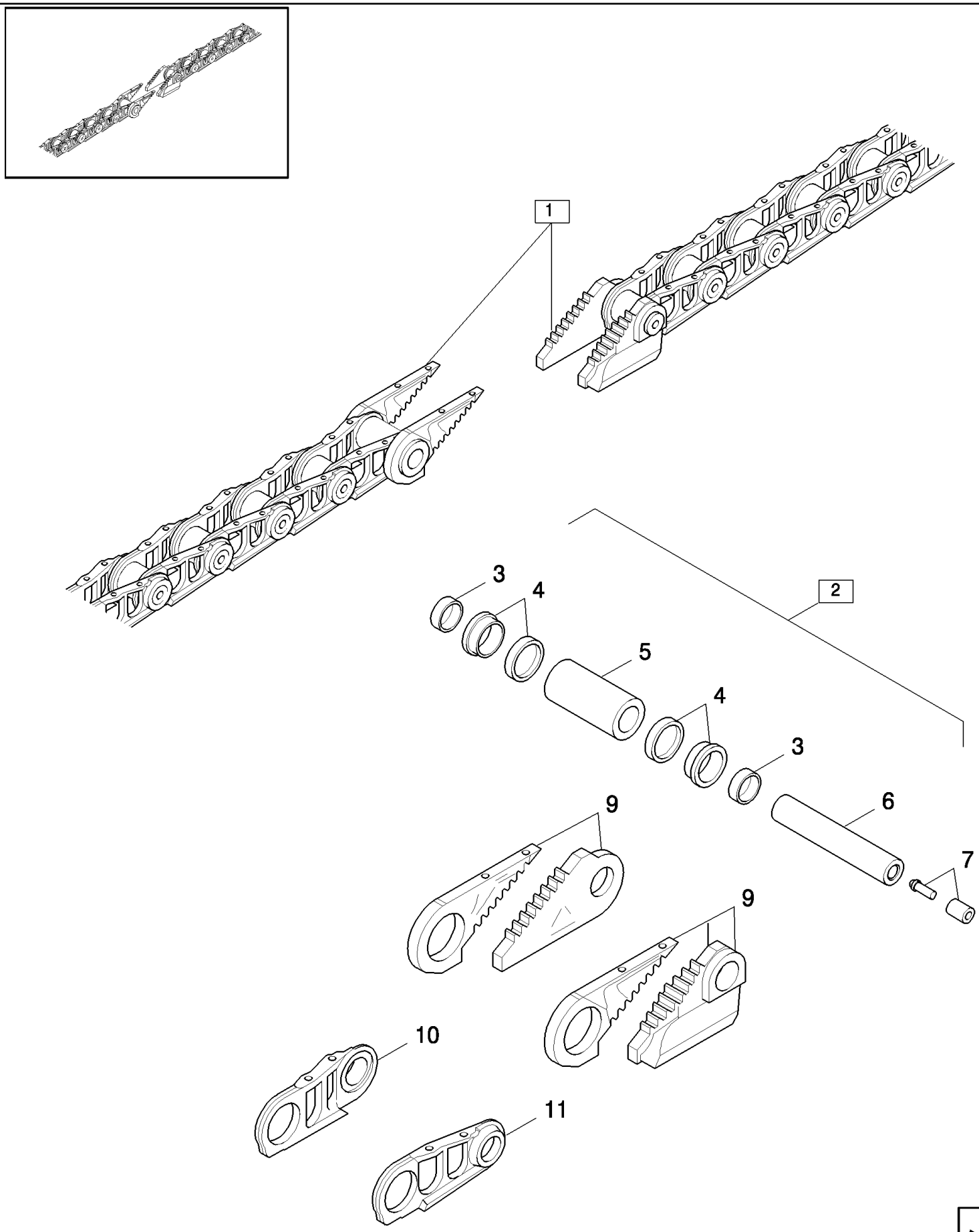

09.107A(01) TRACKS, CHAIN

ссылка	Номер детали	Кол-во	Описание
1	322483100	1	TRACK ASSY, (2 to 11)
2	322583800	1	KIT, (3 to 7)
3	322507650	2	SPACER,
4	322581100	2	SET OF RINGS,
5	322507450	1	BUSHING,
6	322507550	1	PIN,
7	322580500	1	KIT,
8	313545400	AR	LINK, CONNECTING,
9	313545500	AR	LINK, CONNECTING,
10	300134635	AR	TRACK LINK,
11	300134628	AR	TRACK LINK,

09.108(01) TRACK SUPPORTS

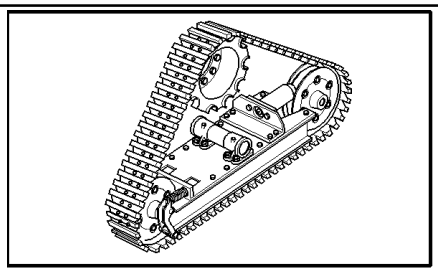

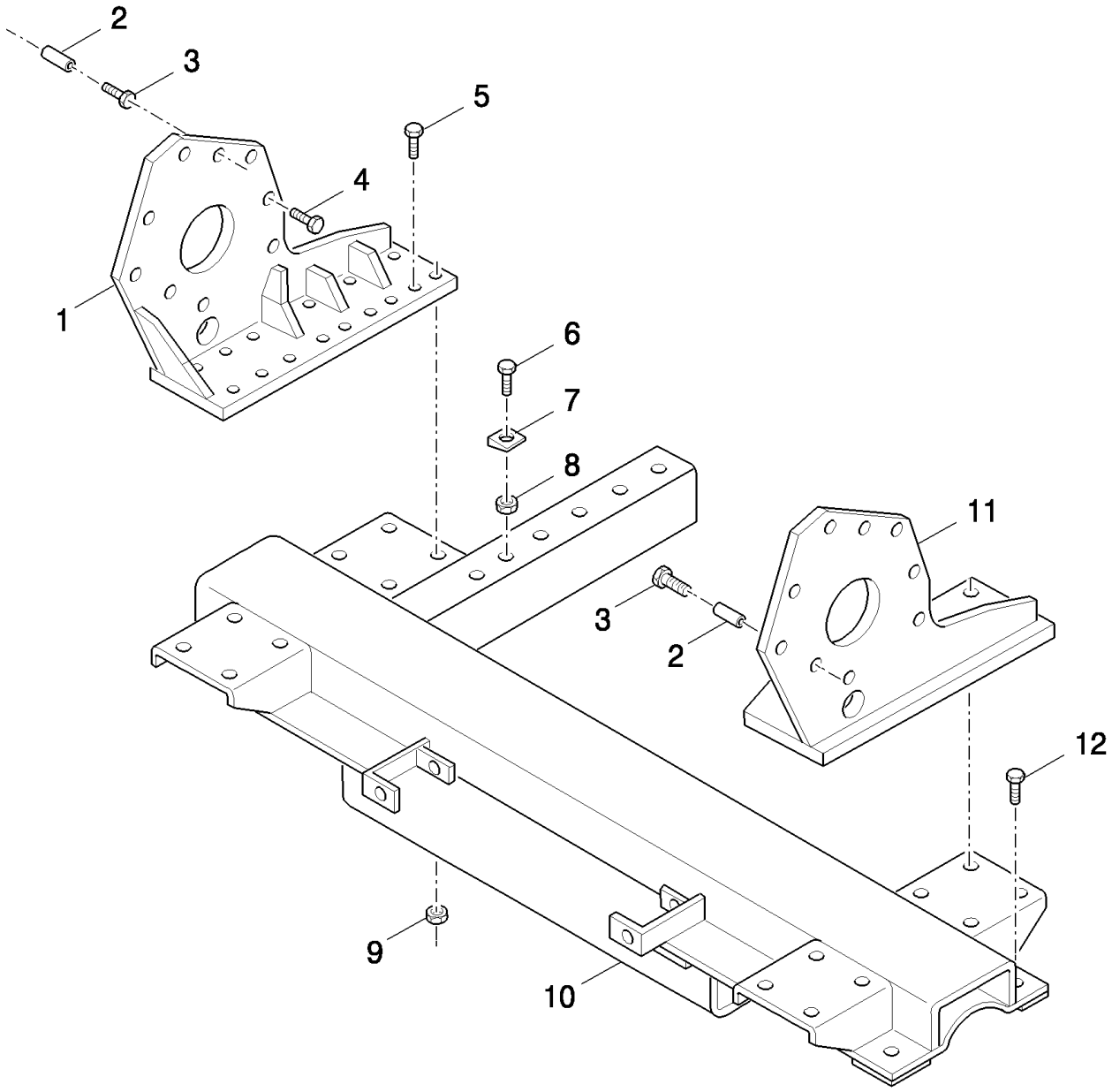

TX68 COMBINE - BASE UNIT

09.108(01) TRACK SUPPORTS

ссылка	Номер детали	Кол-во	Описание
1	322379150	1	PLATE, , FOR TX67-68 ONLY, -C1998
1	322502350	1	PLATE, , FOR TX62-63-64-65-66 ONLY
1	322374850	1	PLATE, , FOR TX62-63-64-65-66 ONLY
1	322502950	1	PLATE, , FOR TX67-68 ONLY, D1999-
2	322379350	4	PIN, ROLL, , FOR TX67-68 ONLY
2	322375050	4	PIN, ROLL, , FOR TX62-63-64-65-66 ONLY
3	10979224	4	BOLT, Hex, M10 x 16, 8.8, Full Thd,
4	280794	16	BOLT, Hex, 7/8"-9 x 3", G8, , FOR TX67-68 ONLY
4	11124937	16	BOLT, Hex, M20 x 60, 10.9, Full Thd, , FOR TX62-63-64-65-66 ONLY
5	11124921	16	BOLT, Hex, M20 x 60, 8.8,
6	11118931	20	BOLT, Hex, M16 x 50, 10.9,
7	322237550	6	PLATE, COVER,
8	12577411	21	NUT, LOCK, M16 x 2, Cl 8,
9	12577711	16	NUT, LOCK, M20 x 2.5, Cl 8, M20
10	322378750	1	SUPPORT, , FOR TX67-68 ONLY, -C1998
10	322503150	1	SUPPORT, , FOR TX67-68 ONLY, D1999-
10	322377950	1	SUPPORT, , FOR TX66 ONLY, -C1998
10	322502450	1	SUPPORT, , FOR TX66 ONLY, D1999-
10	322384750	1	SUPPORT, , FOR TX62-63-64-65 ONLY, -C1998
10	322502750	1	SUPPORT, , FOR TX62-63-64-65 ONLY, D1999-
11	322379250	1	PLATE, , FOR TX67-68 ONLY, -C1998
11	322502250	1	PLATE, , FOR TX62-63-64-65-66 ONLY, D1999-
11	322374950	1	PLATE, , FOR TX62-63-64-65-66 ONLY, -C1998
11	322503050	1	PLATE, , FOR TX67-68 ONLY, D1999-
12	16040134	4	SCREW, M22x90

09.109(01) TRACK SUPPORTS

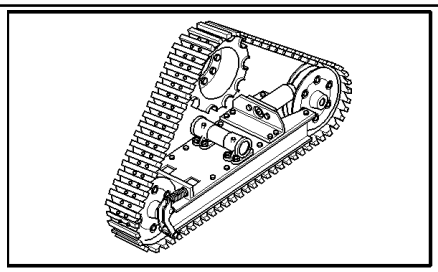

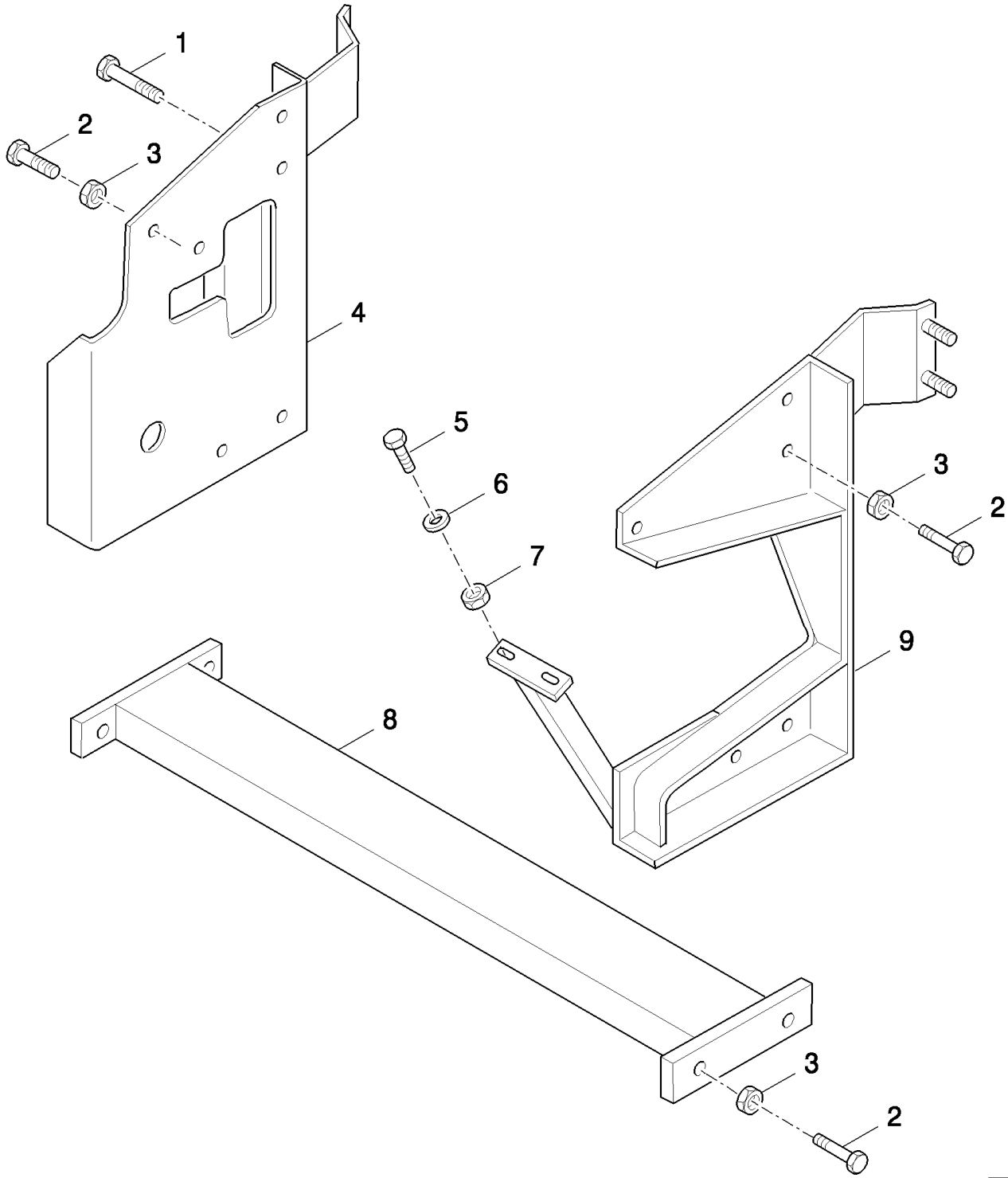

TX68 COMBINE - BASE UNIT

09.109(01) TRACK SUPPORTS

ссылка	Номер детали	Кол-во	Описание
1	11119921	1	BOLT, Hex, M16 x 100, 8.8,
2	11118931	20	BOLT, Hex, M16 x 50, 10.9,
3	12577411	21	NUT, LOCK, M16 x 2, Cl 8,
4	322377850	1	SUPPORT, , FOR SELF-LEVELLING ONLY
4	322385050	1	SUPPORT, , FOR FIXED SHOE ONLY
5	11112821	2	BOLT, Hex, M12 x 40, 8.8, Full Thd,
6	355501230	4	WASHER, 12MM
7	12577511	2	NUT, LOCK, M12 x 1.75, Cl 8,
8	322378050	1	PROFILE, , FOR TX66-67-68 ONLY
8	322384850	1	PROFILE, , FOR TX62-63-64-65 ONLY
9	322377650	1	SUPPORT, , FOR SELF-LEVELLING ONLY
9	322384950	1	SUPPORT, , FOR FIXED SHOE ONLY

C1998

09.109A(01) TRACK SUPPORTS

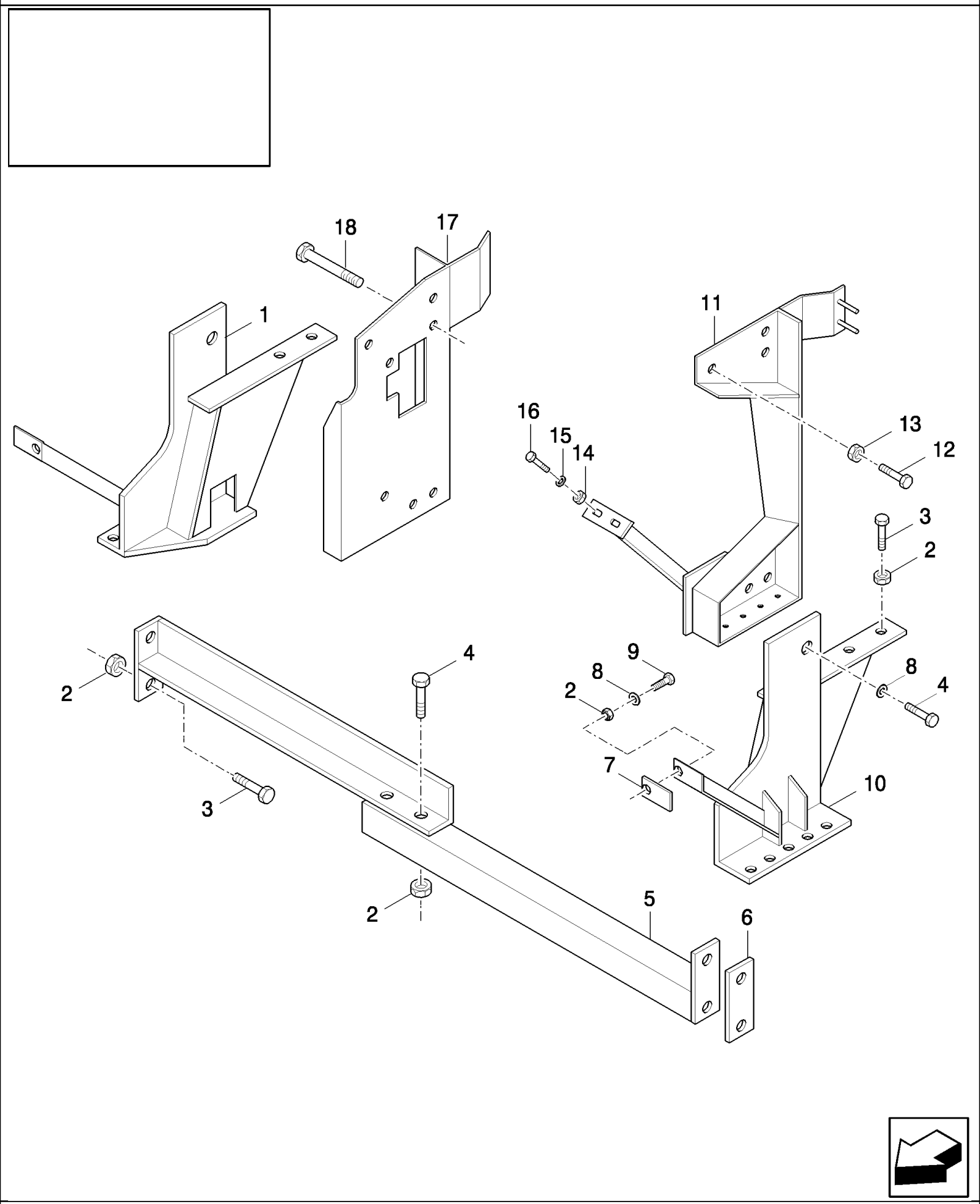

09.109A(01) TRACK SUPPORTS

ссылка	Номер детали	Кол-во	Описание
1	322391350	1	SUPPORT, RH, FOR FIXED SHOE ONLY
2	12577411	AR	NUT, LOCK, M16 x 2, Cl 8,
3	11118921	14	BOLT, Hex, M16 x 50, 8.8, Hex, M16 x 50, 8.8
4	11118521	4	BOLT, Hex, M16 x 40, 8.8,
5	322500350	2	TIE-ROD, , FOR TX66-67-68 ONLY
5	322391550	2	TIE-ROD, , FOR TX62-63-64-65 ONLY
6	322392150	2	PLATE,
7	322391650	2	TIE-ROD,
8	355501640	4	
9	11119031	2	BOLT, Hex, M16 x 55, 10.9, Full Thd, Hex, M16 x 55, 10.9, Full Thd
10	322391450	1	SUPPORT, LH, FOR FIXED SHOE ONLY
11	322377650	1	SUPPORT, LH, FOR SELF-LEVELLING ONLY
12	11118934	2	SCREW, M16x50
13	12577411	2	NUT, LOCK, M16 x 2, Cl 8,
14	12577511	2	NUT, LOCK, M12 x 1.75, Cl 8,
15	355501230	4	WASHER,
16	11112821	2	BOLT, Hex, M12 x 40, 8.8, Full Thd,
17	322377850	1	SUPPORT, RH, FOR SELF-LEVELLING ONLY
18	11119921	1	BOLT, Hex, M16 x 100, 8.8,

09.110(01) TRACK SUPPORTS

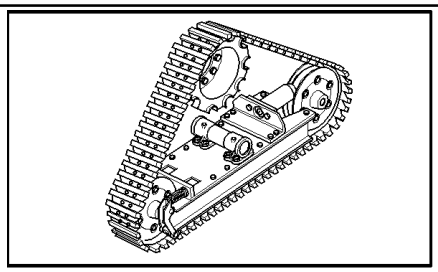

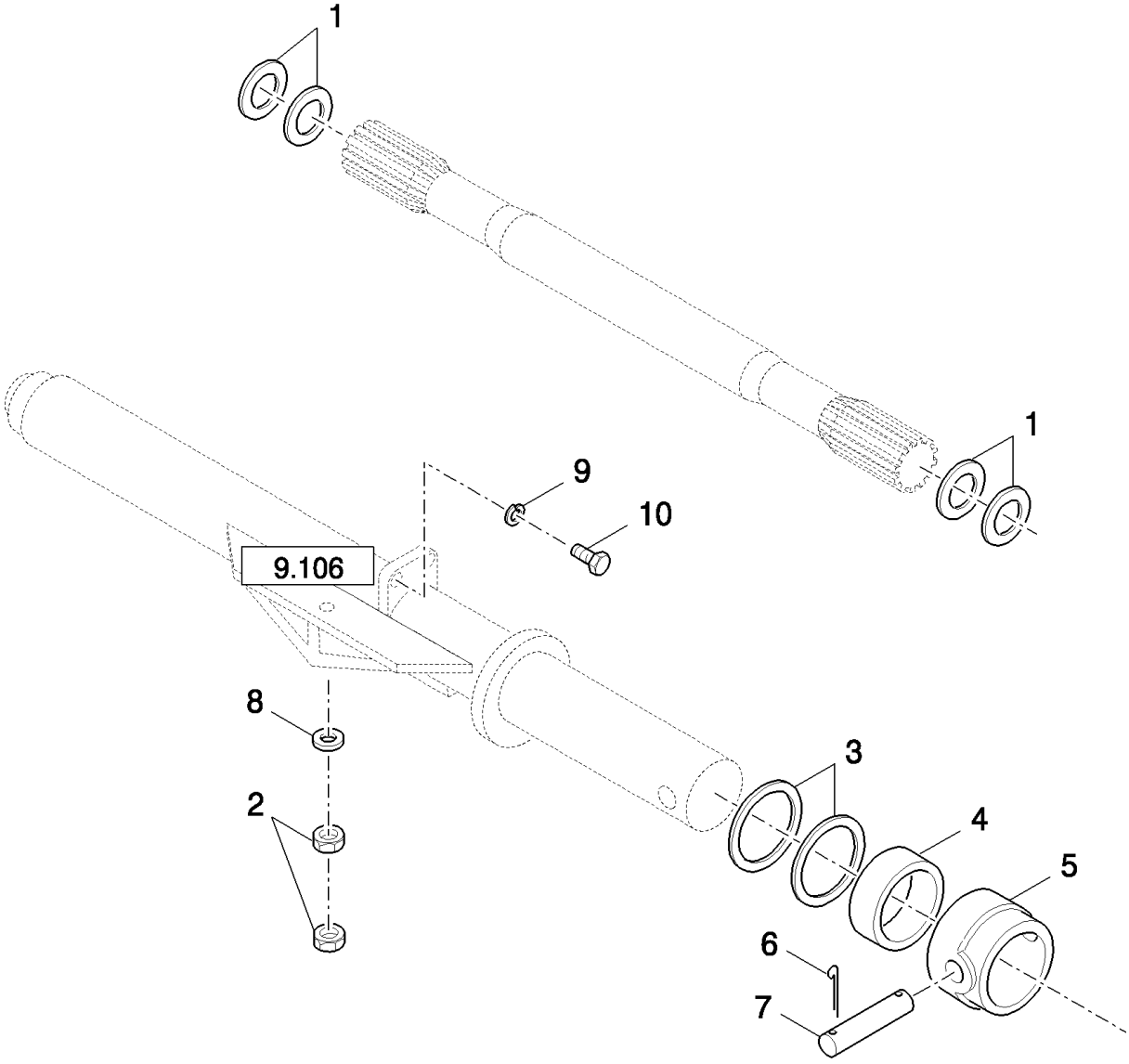

TX68 COMBINE - BASE UNIT

09.110(01) TRACK SUPPORTS

ссылка	Номер детали	Кол-во	Описание
1	322377750	8	WASHER, 17MM
2	12163621	8	NUT, M22 x 2.5, Cl 10,
3	322382750	20	WASHER,
4	322382350	2	SPACER,
5	322382650	2	RING,
6	10798201	4	PIN, SPLIT (COTTER), M6.3 x 32,
7	322382550	2	PIN,
8	350354222	4	WASHER, LOCK,
9	10557237	4	RING,
9	15224521	4	BOLT, Hex, M20 x 90, 8.8, Full Thd,

09.111(01) TRACK ACCESSORIES

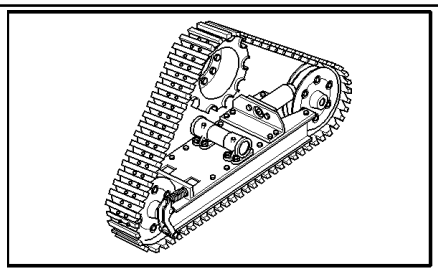

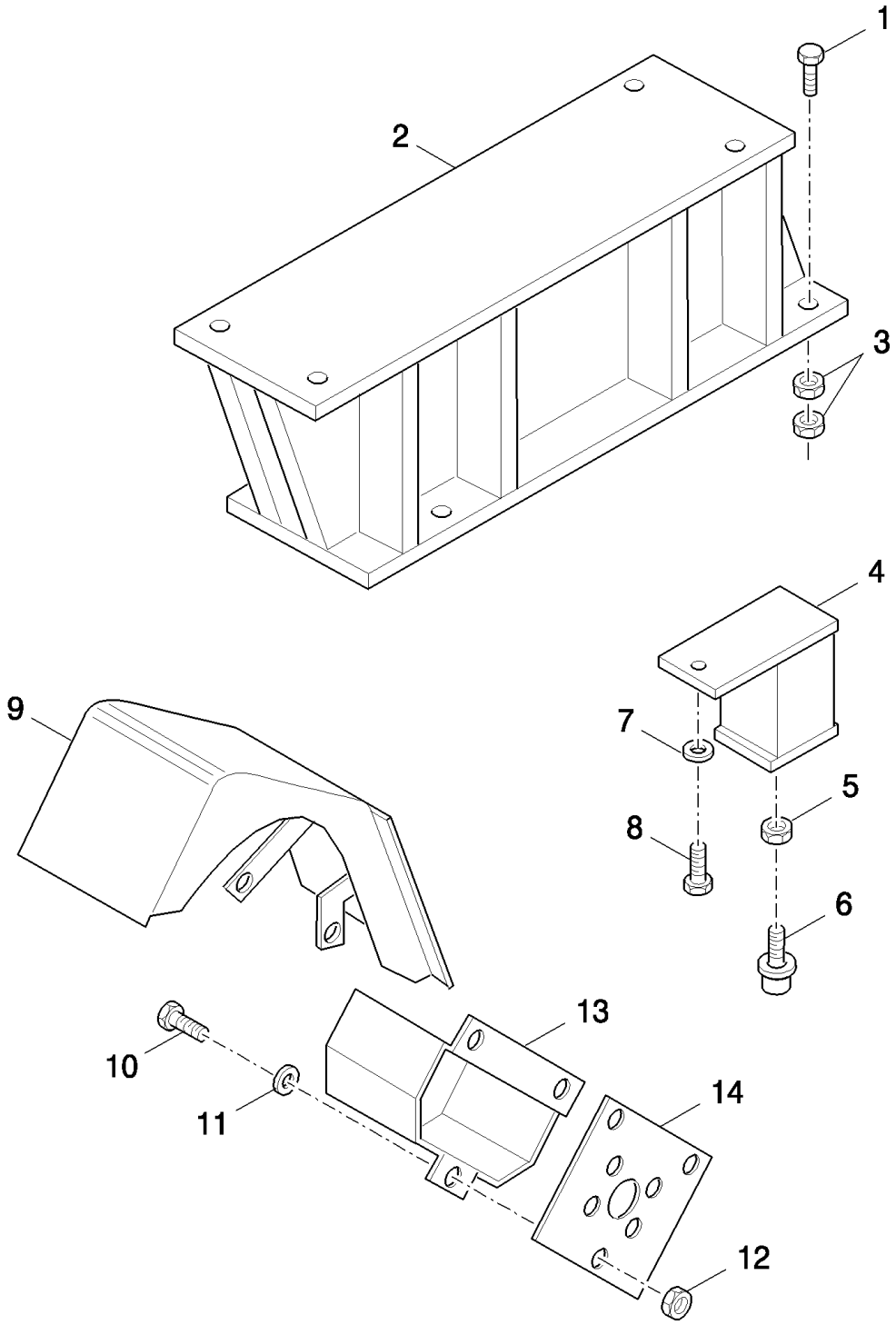

TX68 COMBINE - BASE UNIT

09.111(01) TRACK ACCESSORIES

ссылка	Номер детали	Кол-во	Описание
1	11119121	1	BOLT, Hex, M16 x 60, 8.8, , FOR TX62-64-65 ONLY
2	322385150	1	SUPPORT, , FOR TX62-64-65 ONLY
3	12163321	8	NUT, M16, Cl 10, , FOR TX62-64-65 ONLY
4	322376250	2	GUARD, , FOR TX66 ONLY
4	322390150	2	GUARD, , FOR TX62-64-65 ONLY
5	11701711	2	NUT, M10, Cl 8,
6	190029	2	INSULATOR BLOCK,
7	12605671	2	WASHER, LOCK, Int Tooth, M10,
9	322377250	1	GUARD, RH
9	322377350	1	GUARD, LH
10	15246821	6	BOLT, Hex, M6 x 15, 8.8, Full Thd, M6x15
11	10615474	6	WASHER, LOCK, Ext Tooth, M6,
12	15896221	6	NUT, M6, Cl 10,
13	322377450	2	GUARD,
14	322377550	2	SUPPORT,
8	11106221	2	BOLT, Hex, M10 x 25, 8.8, Full Thd,

SECTIONS	**SECTIONS**	**SECCIONES**	**AFSNIT**
SEZIONI	**ABSCHNITTE**	**SECÇÕES**	**SECTIES**

SEC. 10

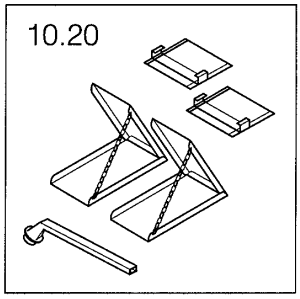

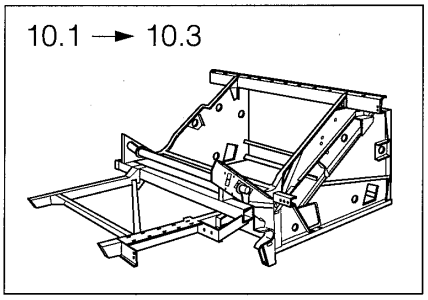

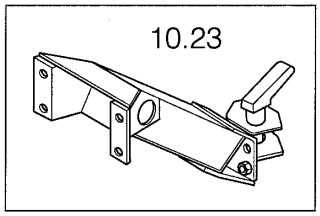

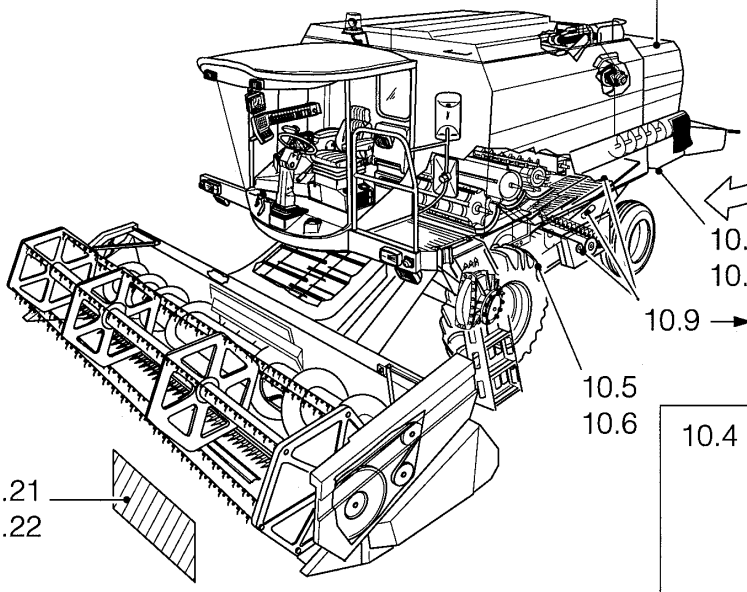

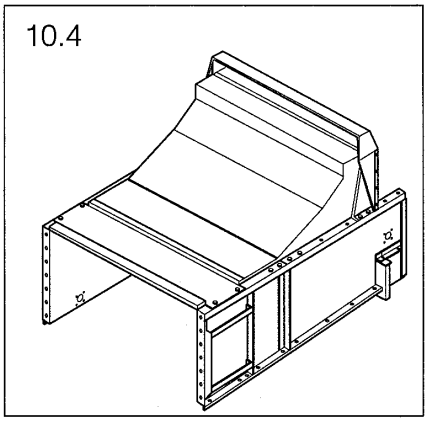

ссылка	Номер детали	Кол-во	Описание

10.01(01) FRAME AND ATTACHING PARTS

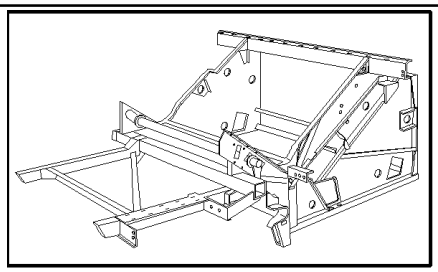

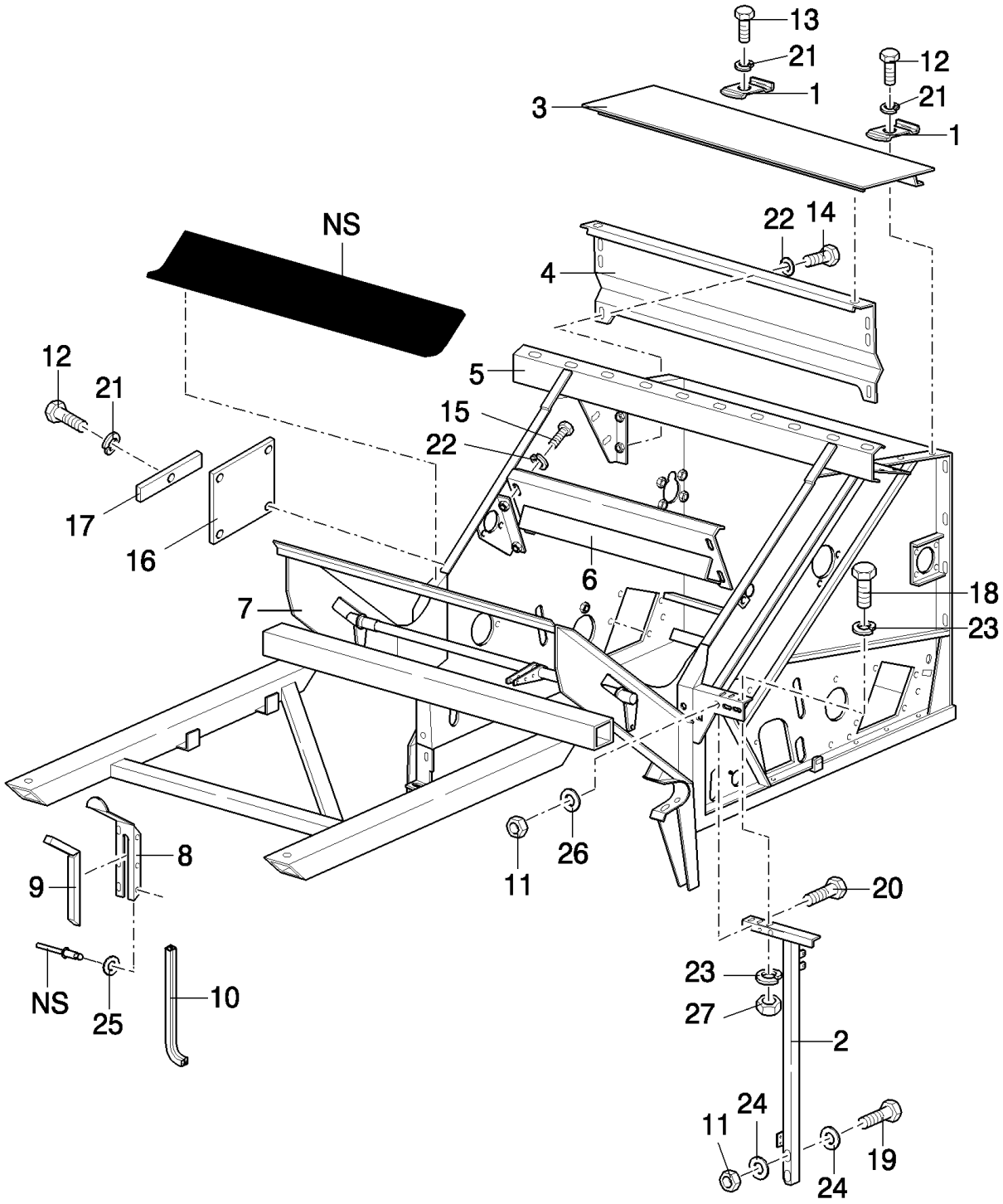

TX68 COMBINE - BASE UNIT

10.01(01) FRAME AND ATTACHING PARTS

ссылка	Номер детали	Кол-во	Описание
1	425093	2	CLIP,
2	84012033	1	SUPPORT, , -C7520
2	84036968	1	SUPPORT, , FOR TX62-63-64-65-66-68 ONLY, D7520-
2	84038818	1	SUPPORT, , FOR TX67 ONLY
3	450991	1	COVER, , FOR TX66-67-68 ONLY
3	80429859	1	COVER, , FOR TX62-63-64-65 ONLY
4	450988	1	PLATE, COVER, , FOR TX66-68 ONLY, -C4620
4	84015640	1	PLATE, COVER, , FOR TX66-67-68 ONLY, D4620-
4	84015638	1	PLATE, COVER, , FOR TX62-63-64-65 ONLY
5	916163	1	SUPPORT, , FOR TX66-67-68 ONLY
5	89832572	1	SUPPORT, , FOR TX62-63-64-65 ONLY
6	9508945	1	PLATE, , FOR TX66-67-68 ONLY
6	9503559	1	PLATE, , FOR TX62-63-64-65 ONLY
7	9814913	1	FRAME, , FOR TX66-68 ONLY, -C4620
7	84017425	1	FRAME, , FOR TX66-68 ONLY, -C0022
7	84039568	1	FRAME, , WITH VARIABLE BEATER DRIVE ONLY, FOR TX66-67-68 ONLY, D7520-
7	84043530	1	FRAME, , WITH CONSTANT BEATER DRIVE ONLY, FOR TX68 ONLY
7	89814912	1	FRAME, , FOR TX64-65 ONLY, -C7520
7	84039569	1	FRAME, , FOR TX64-65 ONLY, FOR TX63 WITH REMOTE CONTROL, D7520-
7	84011632	1	FRAME, , FOR TX62 ONLY, -C7520
7	84039570	1	FRAME, , FOR TX62-63 ONLY, FOR TX63 WITHOUT REMOTE CONTROL, D7520-
8	9812837	1	PLATE, , FOR TX63 WITHOUT REMOTE CONTROL, FOR TX62-63 ONLY
9	89812838	1	ELEMENT, SEALING, , FOR TX62-63 ONLY, FOR TX63 WITHOUT REMOTE CONTROL
10	84056063	1	SEAL PROTECTION, , FOR TX63 WITHOUT REMOTE CONTROL, FOR TX62-63 ONLY
11	100020	3	NUT, M16, Cl 8,
12	43127	6	BOLT, Hex, M8 x 25, 8.8,
13	120104	AR	SCREW, Hex, M8 x 20, 8.8,
14	43138	6	SCREW, Hex, M10 x 20, 8.8, Full Thd,
15	11106231	AR	BOLT, Hex, M10 x 25, 10.9, Full Thd,
16	84018106	1	PLATE, COVER, , FOR TX62-64-65 ONLY
17	84018107	1	BRACKET, , FOR TX62-64-65 ONLY
18	86517808	1	SCREW, M12x35
19	80120256	2	SCREW, M16x35
20	43168	2	BOLT, Hex, M16 x 40, 8.8,
21	322358	6	WASHER, SPRING, Belleville, M8,
22	140045	10	WASHER, SPRING, Belleville, M10,
23	140046	3	WASHER, Belleville, M12,
24	140048	4	WASHER, SPRING, Belleville, M16,
25	335872	8	WASHER,
26	394631	2	WASHER,
27	337475	1	NUT, M12, Cl 10,

10.02(01) FRAME AND ATTACHING PARTS

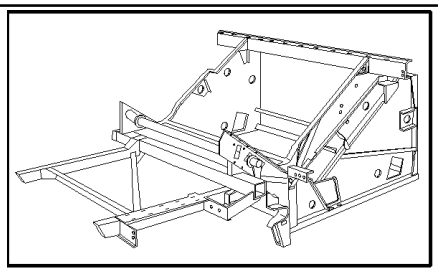

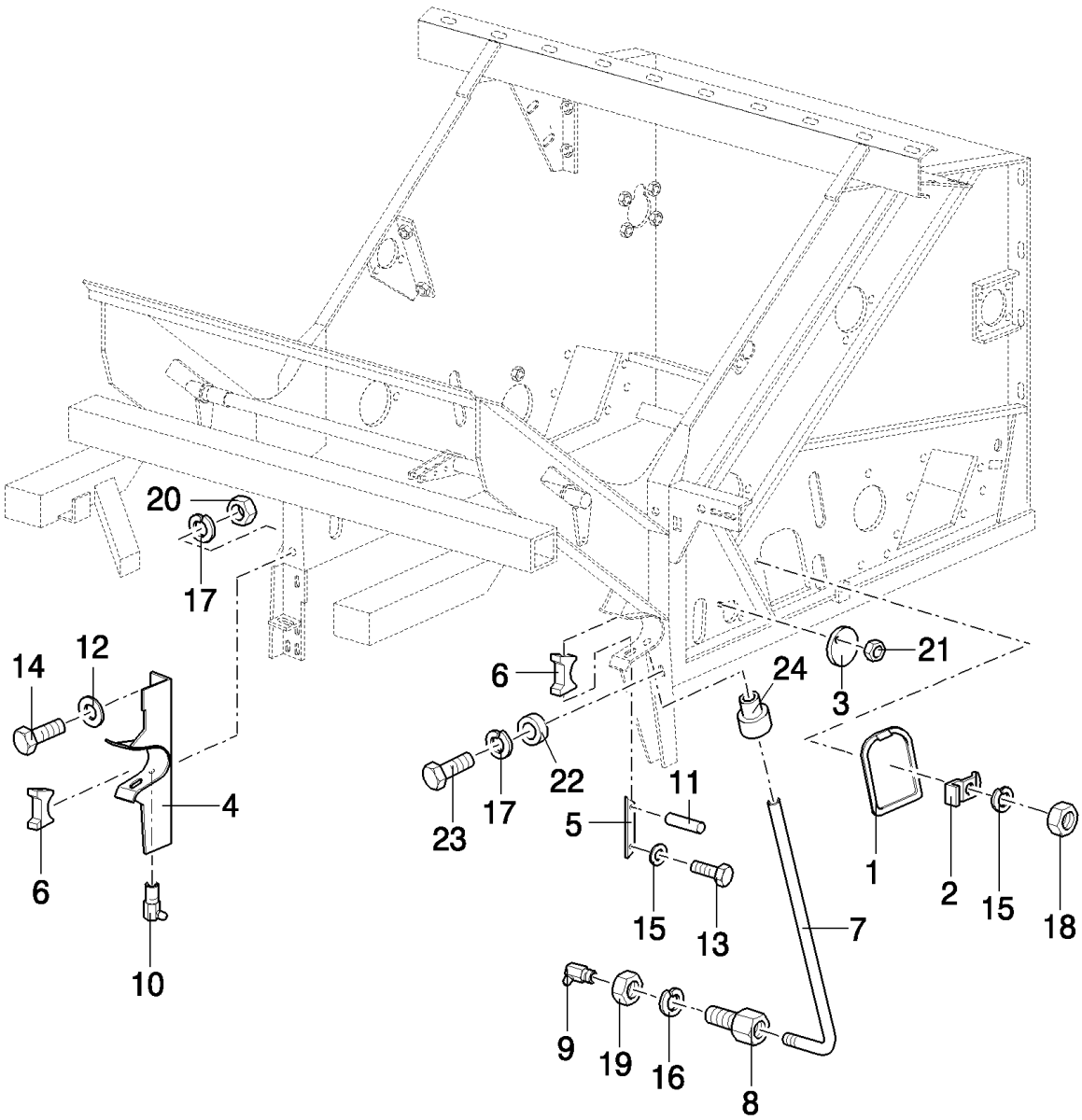

TX68 COMBINE - BASE UNIT

10.02(01) FRAME AND ATTACHING PARTS

ссылка	Номер детали	Кол-во	Описание
1	753976	1	COVER,
2	425093	4	CLIP,
3	429855	3	COVER,
4	9831165	1	BRACKET, , -C7520
5	9509745	2	BRACKET,
6	84043175	2	CLAMP, , -C7520
6	84032458	2	CLAMP, , D7520-
7	84012020	1	TUBE, RIGID,
8	9510459	1	CONNECTOR, HYD., , -C7520
9	323713	1	NIPPLE, LUBE, , -C7520
10	321204	1	NIPPLE, LUBE, M6 x 1, 16mm lg, , -C7520
11	9512583	2	PIN, LOCK, M10 x 30, Slotted,
12	333041	11	WASHER,
13	120104	2	SCREW, Hex, M8 x 20, 8.8,
14	120090	4	SCREW, Hex, M16 x 50, 8.8,
15	322358	3	WASHER, SPRING, Belleville, M8,
16	140045	1	WASHER, SPRING, Belleville, M10,
17	394631	2	WASHER, 16MM
18	9706690	2	NUT, M8, Cl 8,
19	100016	1	NUT, M10, Cl 8,
20	100020	2	NUT, M16, Cl 8,
21	86629542	3	NUT, LOCK, M8 x 1.25, Cl 8,
22	84032103	6	BUSHING,
23	394674	6	BOLT, Hex, M16 x 80, 8.8, Full Thd,
24	89512660	1	CONNECTOR, HYD., , WELDED PART

10.03(01) FRAME AND ATTACHING PARTS

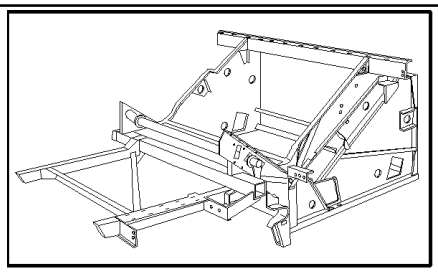

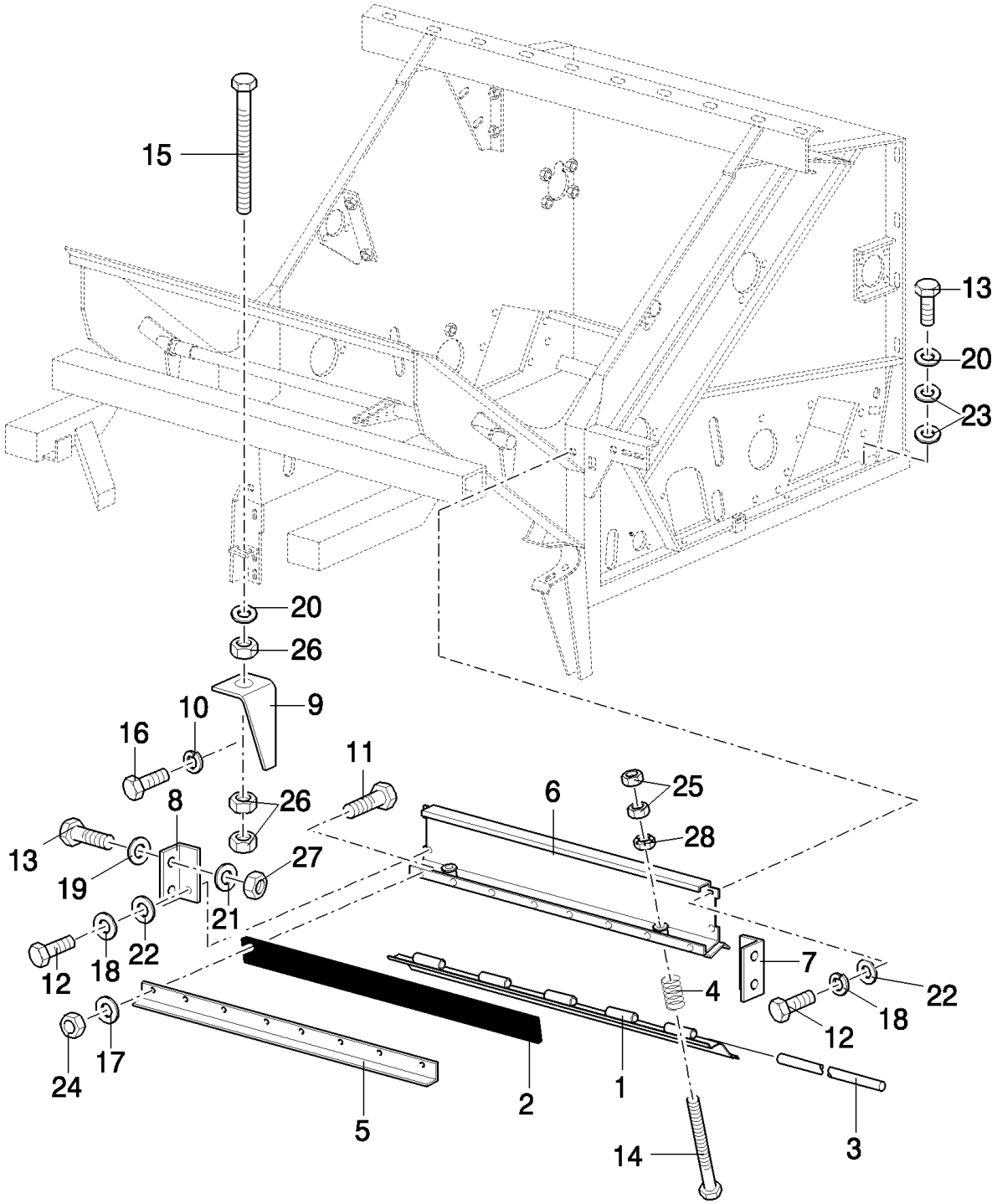

TX68 COMBINE - BASE UNIT

10.03(01) FRAME AND ATTACHING PARTS

ссылка	Номер детали	Кол-во	Описание
1	84014451	1	COVER, , FOR TX66-68 ONLY, -C4540
1	84015568	1	COVER, , FOR TX62-63-64-65 ONLY
2	9501663	1	CANVAS, , FOR TX66-67-68 ONLY, -C7520
2	84041394	1	CANVAS, , FOR TX66-67-68 ONLY, D7520-
2	922309	1	CANVAS, , FOR TX62-64-65 ONLY, -C7520
2	84041402	1	CANVAS, , FOR TX62-63-64-65 ONLY, D7520-
3	390376	1	ROD, , FOR TX66-68 ONLY, -C4540
3	394608	1	ROD, , FOR TX62-63-64-65 ONLY
4	180069	2	SPRING,
5	390374	1	PLATE, FIXING, , FOR TX66-67-68 ONLY
5	399397	1	SUPPORT, , FOR TX62-63-64-65 ONLY
6	9814580	1	COVER, , FOR TX66-68 ONLY, -C4540
6	84041407	1	COVER, , FOR TX66-67-68 ONLY, D4540-
6	89814360	1	COVER, , FOR TX62-64-65 ONLY, -C4540
6	84041405	1	COVER, , FOR TX62-63-64-65 ONLY, D4540-
7	9814356	1	SUPPORT, LH, -C4540
7	84019655	1	SUPPORT, LH, -C0026
7	84041404	1	SUPPORT, LH, D7520-
8	9814358	1	SUPPORT, RH, -C4540
8	84019657	1	SUPPORT, RH, -C0026
8	84041403	1	SUPPORT, RH, D7520-
9	89831019	1	PLATE, , -C7520
10	333041	2	WASHER,
11	120100	8	BOLT, Hex, M6 x 20, 8.8,
12	120104	4	SCREW, Hex, M8 x 20, 8.8,
13	9706687	26	SCREW, Hex, M12 x 30, 8.8,
14	120117	2	BOLT, Hex, M10 x 110, 8.8, Full Thd,
15	120124	1	BOLT, Hex, M12 x 90, 8.8,
16	80120256	4	SCREW, M16x35
17	322357	8	WASHER, SPRING, Belleville, M6,
18	322358	4	WASHER, SPRING, Belleville, M8,
19	140045	28	WASHER, SPRING, Belleville, M10,
20	140046	1	WASHER, Belleville, M12,
21	378244	4	WASHER, M10,
22	140041	2	WASHER, M8 x 28 x 3,
23	543043	28	WASHER,
24	15896221	8	NUT, M6, Cl 10,
25	100016	2	NUT, M10, Cl 8,
26	337475	3	NUT, M12, Cl 10,
27	100037	4	NUT, M10 x 1.5, Cl 8,
28	86514720	2	NUT, LOCK, M10

10.04(01) SHAKER SHOE, FRAME

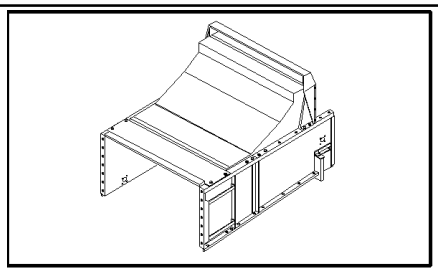

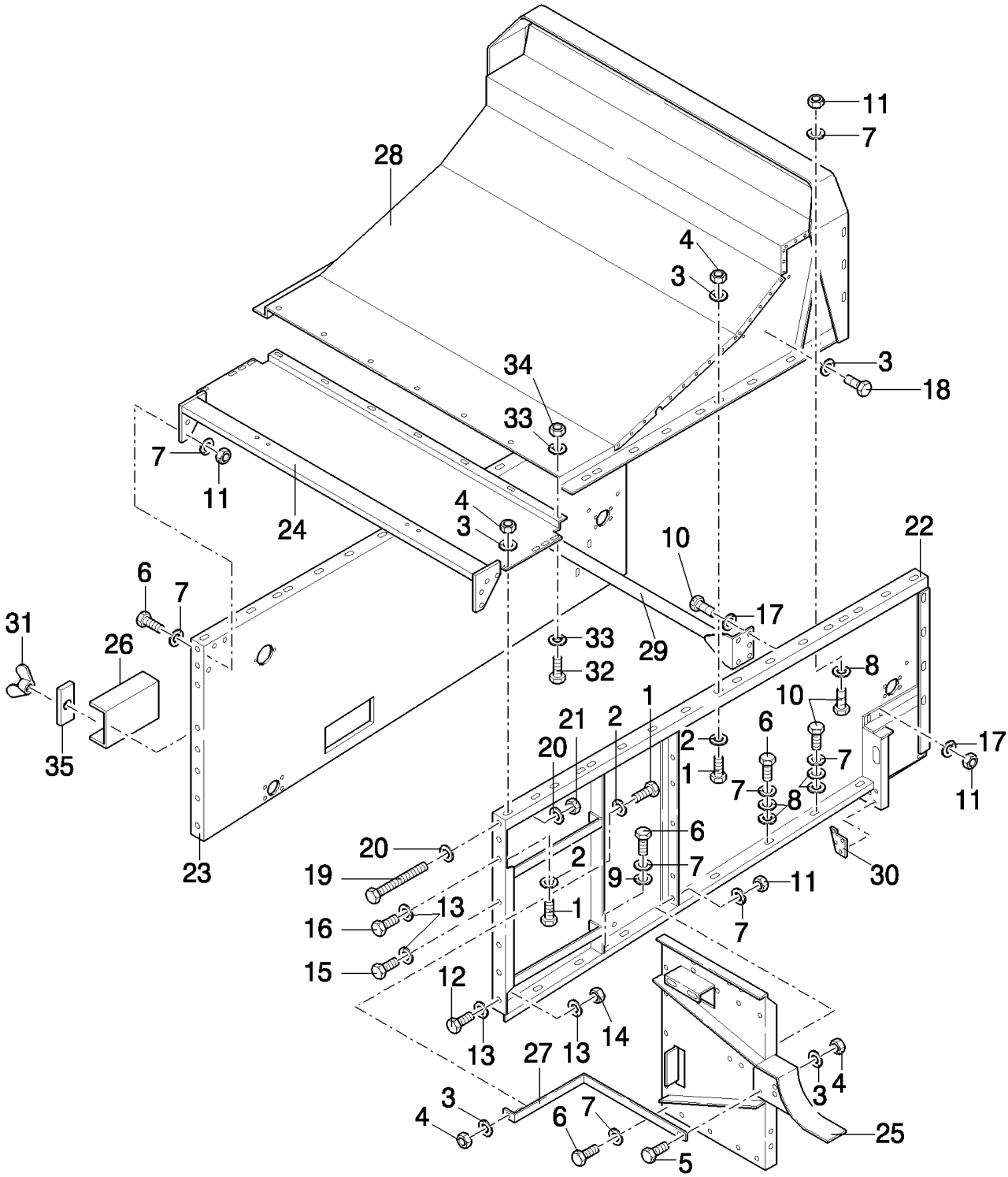

TX68 COMBINE - BASE UNIT

10.04(01) SHAKER SHOE, FRAME

ссылка	Номер детали	Кол-во	Описание
1	120104	11	SCREW, Hex, M8 x 20, 8.8,
2	140041	11	WASHER, M8 x 28 x 3,
3	412650	15	WASHER, Belleville, M8,
4	9706690	12	NUT, M8, Cl 8,
5	43128	1	BOLT, Hex, M8 x 30, 8.8,
6	11106231	22	BOLT, Hex, M10 x 25, 10.9, Full Thd,
7	140045	40	WASHER, SPRING, Belleville, M10,
8	140042	28	WASHER, M10 x 34 x 3,
9	332909	1	WASHER, 11MM
10	43140	15	BOLT, Hex, M10 x 30, 8.8, Full Thd,
11	100016	19	NUT, M10, Cl 8,
12	9706687	5	SCREW, Hex, M12 x 30, 8.8,
13	394630	18	WASHER, 13MM
14	337475	9	NUT, M12, Cl 10,
15	300389	1	BOLT, Hex, M12 x 35, 8.8, Full Thd,
16	337563	3	BOLT, Hex, M12 x 40, 10.9, Full Thd,
17	394629	12	WASHER, LOCK, 10MM
18	80120099	3	BOLT, Hex, M6 x 16, 8.8,
19	120251	2	BOLT, Hex, M16 x 170, 8.8,
20	333041	4	WASHER, 16MM
21	100020	2	NUT, M16, Cl 8,
22	9819603	1	FRAME, , FOR TX66-68 ONLY, -C4540
22	84017159	1	FRAME, , FOR TX66-68 ONLY, D4540-
22	84017159	1	FRAME, , FOR TX62-63-64-65-67 ONLY
23	9819604	1	FRAME, , FOR TX66-68 ONLY, -C4540
23	84017160	1	FRAME, , FOR TX66-68 ONLY, WITH VARIABLE BEATER DRIVE ONLY, D4540-
23	84043724	1	FRAME, , FOR TX68 ONLY, WITH CONSTANT BEATER DRIVE ONLY
23	84017160	1	FRAME, , FOR TX62-63-64-65-67 ONLY
24	740788	1	SUPPORT, , FOR TX66-67-68 ONLY
24	80754683	1	SUPPORT, , FOR TX62-63-64-65 ONLY
25	9831201	1	SUPPORT, , FOR TX66-68 ONLY, -C4450
25	84015948	1	SUPPORT, , FOR TX66-68 ONLY, -C0021
25	84041944	1	SUPPORT, , FOR TX66-68 ONLY, D7520-
25	89831200	1	SUPPORT, , FOR TX62-64-65 ONLY, -C7520
25	84041945	1	SUPPORT, , FOR TX62-63-64-65-67 ONLY, D7520-
26	9832214	1	COVER,
27	754876	1	SUPPORT,
28	9819397	1	COVER, , FOR TX66-67-68 ONLY
28	89831169	1	COVER, , FOR TX62-63-64-65 ONLY
29	9819600	1	SUPPORT, , FOR TX66-67-68 ONLY, BSN C375
29	84100383	1	SUPPORT, , FOR TX66-67-68 ONLY, ASN D376
29	89819599	1	ARM, , FOR TX62-63-64-65 ONLY, BSN C375
29	84100384	1	SUPPORT, , FOR TX62-63-64-65 ONLY, ASN D376
30	920762	10	PLATE,

TX68 COMBINE - BASE UNIT

10.04(01) SHAKER SHOE, FRAME

ссылка	Номер детали	Кол-во	Описание
31	308369	2	NUT, WING,
32	120100	7	BOLT, Hex, M6 x 20, 8.8,
33	412649	14	WASHER, SPRING, Belleville, M6,
34	15896221	7	NUT, M6, Cl 10,
35	356112	2	PLATE,

10.05(01) LOWER AND PIVOT FRAME, SELF-LEVELLING

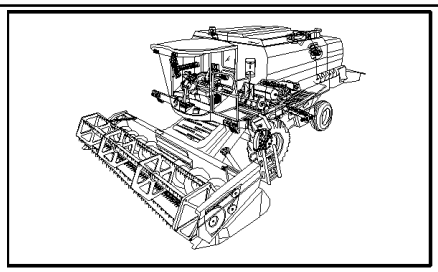

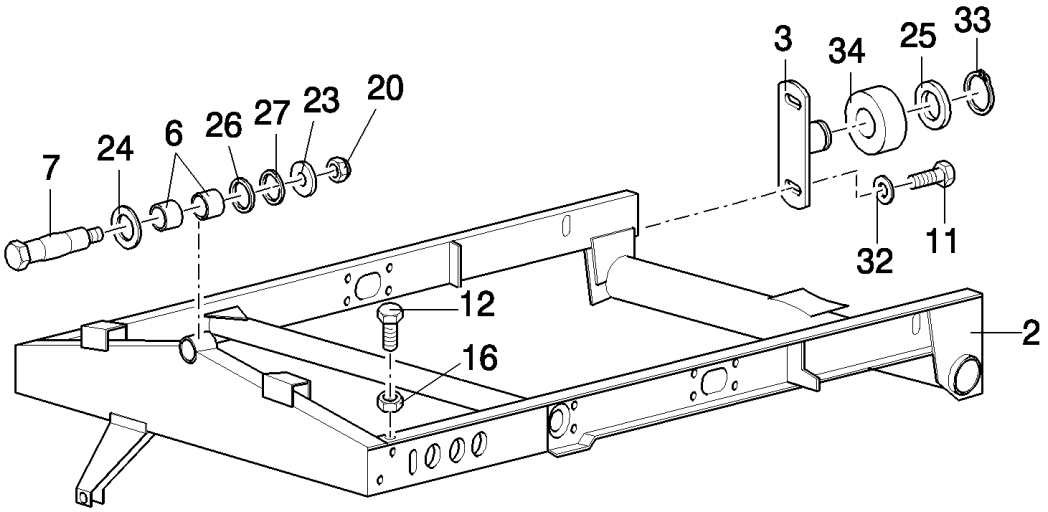

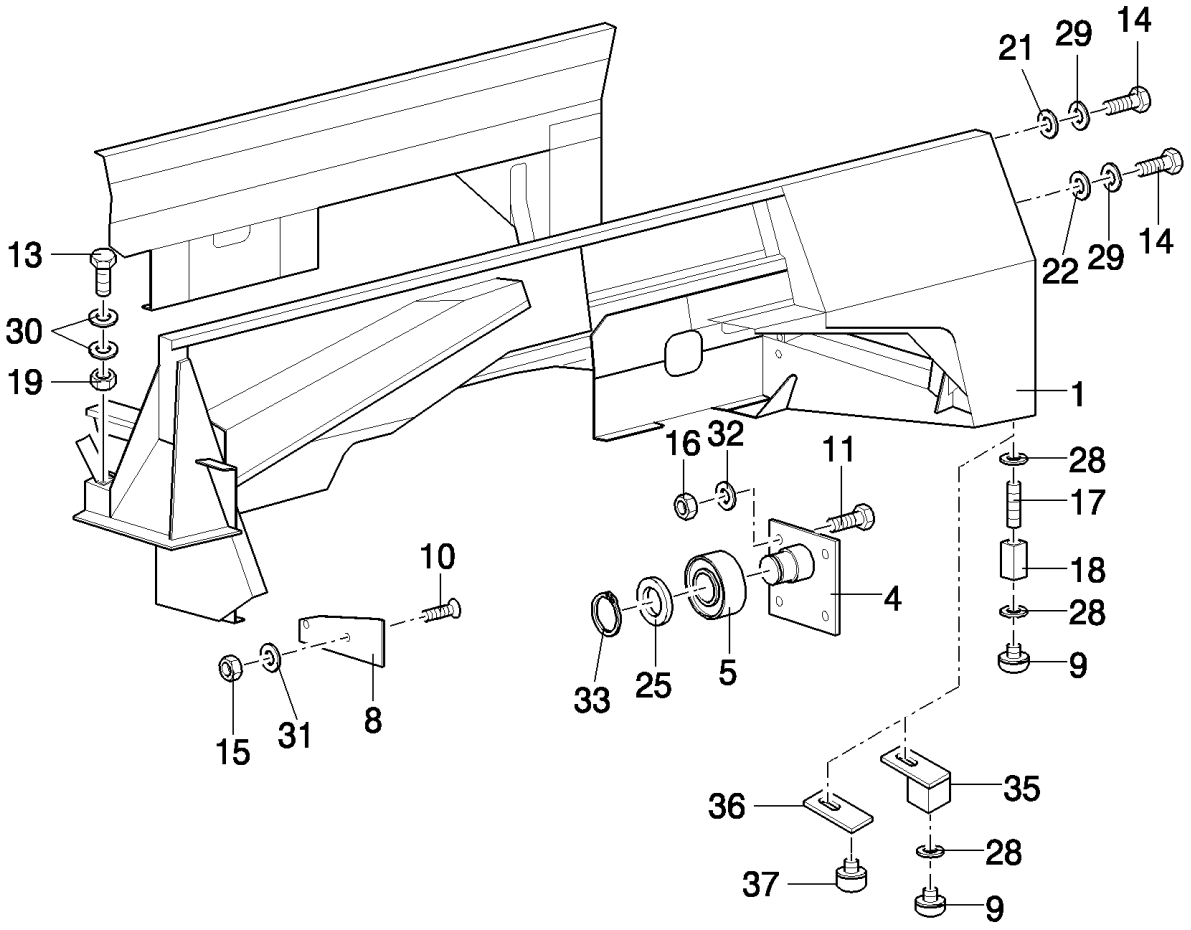

TX68 COMBINE - BASE UNIT

10.05(01) LOWER AND PIVOT FRAME, SELF-LEVELLING

ссылка	Номер детали	Кол-во	Описание
1	9831922	1	FRAME, , FOR TX66-68 ONLY
1	89831923	1	FRAME, , FOR TX62-64-65 ONLY, -C6405
1	84041017	1	FRAME, , FOR TX62-63-64-65 ONLY, D6405-
1	84002690	1	FRAME, , FOR TX67 ONLY
2	84037708	1	SHOE, SHAKER, , FOR TX67 ONLY, FOR TX66-68 ONLY, BSN C375
2	84449804	1	SHOE, SHAKER, , FOR TX66-68 ONLY, FOR TX67 ONLY, ASN D376
2	84037748	1	SHOE, SHAKER, , FOR TX62-63-64-65 ONLY, BSN C375
2	84449955	1	SHOE, SHAKER, , FOR TX62-63-64-65 ONLY, ASN D376
3	9504221	2	HINGE,
4	434814	1	HINGE,
5	210049	1	BEARING ASSY,
6	429232	2	SLEEVE,
7	9831928	1	SHAFT,
8	9831015	1	PLATE, COVER,
8	9831016	1	PLATE,
9	190029	2	INSULATOR BLOCK,
10	412495	11	SCREW, Hex Soc Flat Hd, M8 x 20, 8.8, M8x20
11	11106231	8	BOLT, Hex, M10 x 25, 10.9, Full Thd,
12	120112	2	BOLT, Hex, M10 x 40, 8.8, Full Thd,
13	43168	4	BOLT, Hex, M16 x 40, 8.8,
14	337563	6	BOLT, Hex, M12 x 40, 10.9, Full Thd,
15	9706690	7	NUT, M8, Cl 8,
16	100016	6	NUT, M10, Cl 8,
17	412593	2	BOLT,
18	84026231	2	BLOCK,
19	100020	4	NUT, M16, Cl 8,
20	86000441	1	NUT, M16 x 2, Cl 8,
21	394630	2	WASHER, 13MM
22	84014353	4	WASHER, LOCK, 13MM
23	84007183	1	WASHER,
24	140061	1	WASHER, 41MM
25	442203	6	WASHER, 41MM
26	9508900	1	WASHER, 41MM
27	9513615	1	WASHER, 16MM
28	140083	2	WASHER, 11MM
29	140046	6	WASHER, Belleville, M12,
30	394631	8	WASHER,
31	322358	7	WASHER, SPRING, Belleville, M8,
32	140045	8	WASHER, SPRING, Belleville, M10,
33	370006	3	RING, SNAP,
34	434817	2	ROLLER,
35	84062497	2	SUPPORT, , FOR TX66-68 ONLY, -C0042
35	84062499	2	SUPPORT, , FOR TX67 ONLY, -C0042
36	84062680	2	PLATE, , FOR TX66-67-68 ONLY, -C0042

TX68 COMBINE - BASE UNIT

10.05(01) LOWER AND PIVOT FRAME, SELF-LEVELLING

ссылка	Номер детали	Кол-во	Описание
37	84062673	2	INSULATOR BLOCK, , FOR TX66-67-68 ONLY, -C0042

10.06(01) LOWER FRAME, FIXED SHOE

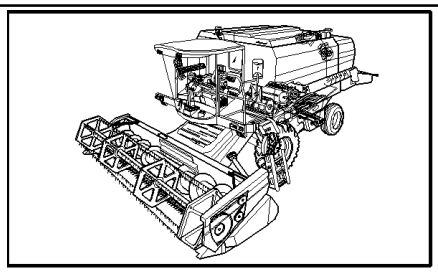

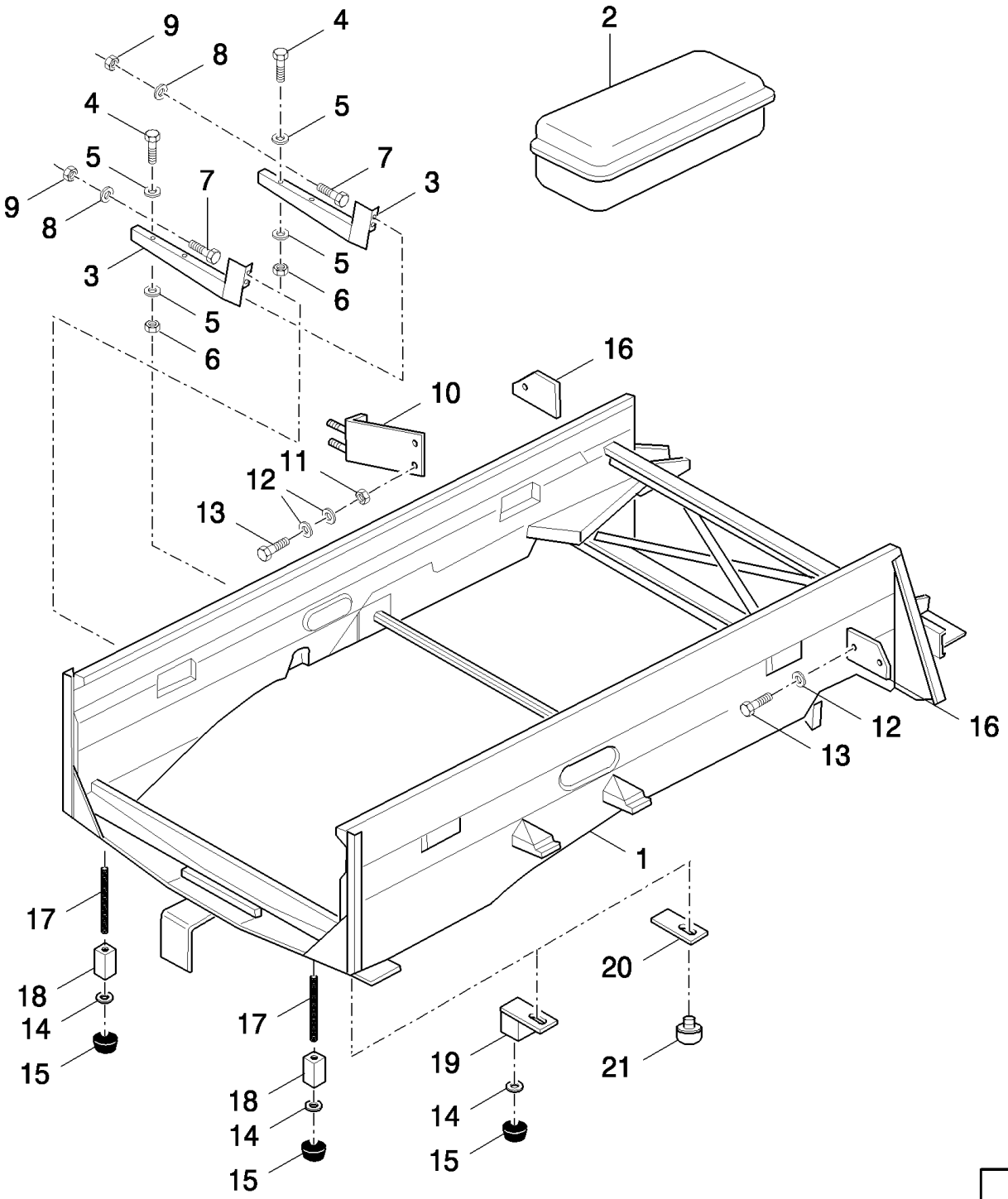

TX68 COMBINE - BASE UNIT

10.06(01) LOWER FRAME, FIXED SHOE

ссылка	Номер детали	Кол-во	Описание
1	84001608	1	FRAME, , FOR TX66-68 ONLY
1	84002362	1	FRAME, , FOR TX62-64-65 ONLY, -C6405
1	84035016	1	FRAME, , FOR TX62-63-64-65 ONLY, D6405-
1	84002800	1	FRAME, , FOR TX67 ONLY
2	328024	1	BOX, TOOL,
3	84001298	2	SUPPORT,
4	120100	4	BOLT, Hex, M6 x 20, 8.8,
5	412649	8	WASHER, SPRING, Belleville, M6,
6	15896221	4	NUT, M6, Cl 10,
7	V43471	2	BOLT, M10x20
8	140045	4	WASHER, SPRING, Belleville, M10,
9	100016	4	NUT, M10, Cl 8,
10	921511	1	SUPPORT, , FOR TX62-63-64-65-66-68 ONLY
10	84002828	1	SUPPORT, , FOR TX67 ONLY
11	9706690	2	NUT, M8, Cl 8,
12	322358	4	WASHER, SPRING, Belleville, M8,
13	120104	6	SCREW, Hex, M8 x 20, 8.8,
14	140083	2	WASHER,
15	190029	2	INSULATOR BLOCK,
16	84001180	2	REINFORCEMENT,
17	412593	2	BOLT,
18	84026231	2	BLOCK,
19	84062497	2	SUPPORT, , FOR TX66-68 ONLY, -C0042
19	84062499	2	SUPPORT, , FOR TX67 ONLY, -C0042
20	84062680	2	PLATE, , FOR TX66-67-68 ONLY, -C0042
21	84062673	2	INSULATOR BLOCK, , FOR TX66-67-68 ONLY, -C0042

10.07(01) TOOL BOX AND BATTERY COVERS

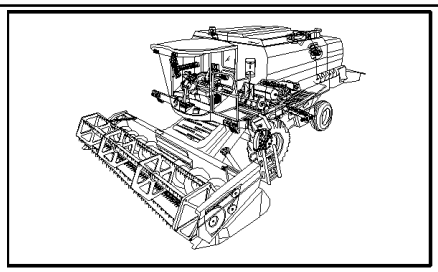

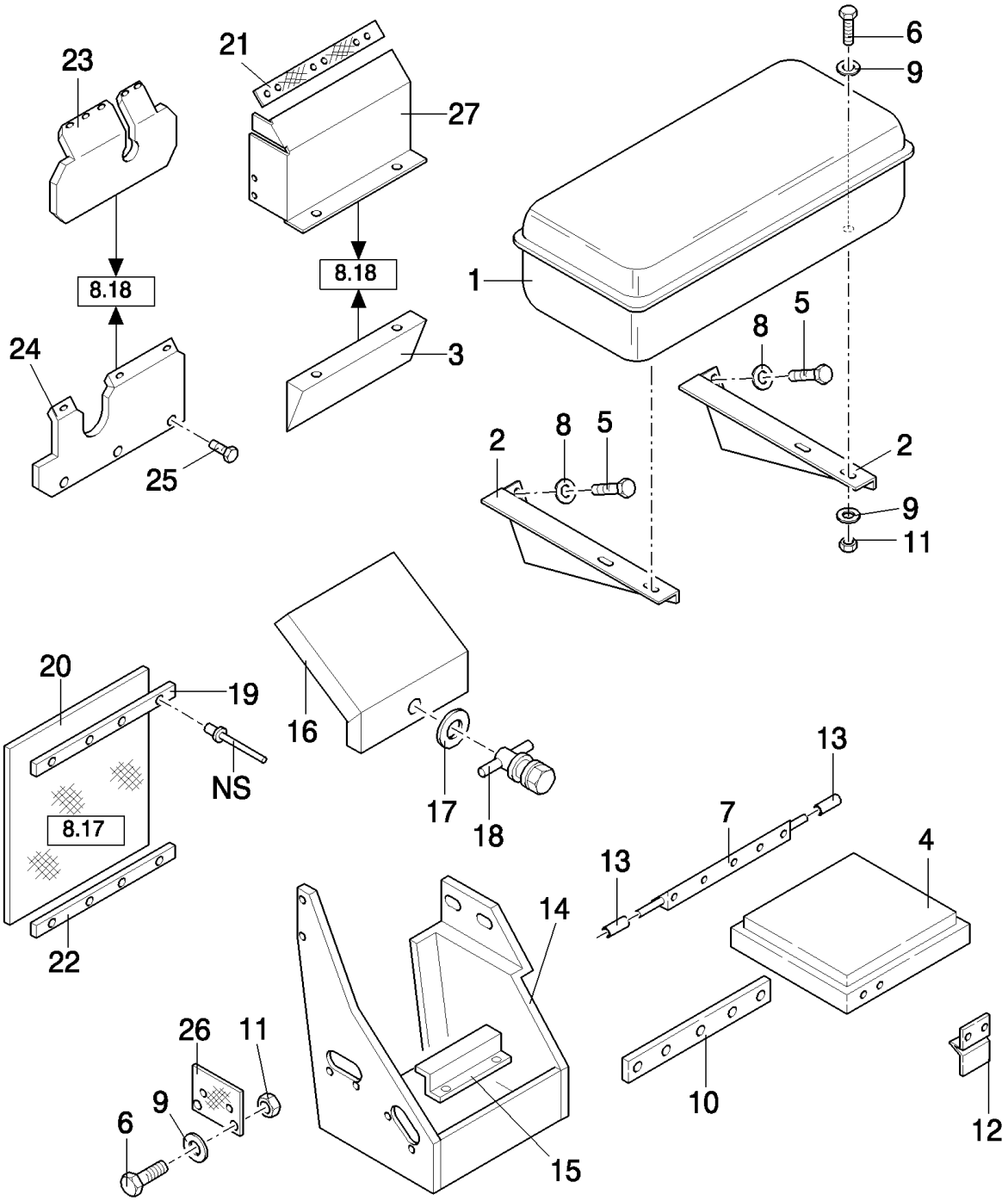

TX68 COMBINE - BASE UNIT

10.07(01) TOOL BOX AND BATTERY COVERS

ссылка	Номер детали	Кол-во	Описание
1	328024	1	BOX, TOOL,
2	84015363	2	SUPPORT,
3	84037663	1	PLATE, COVER, , FOR TX67 ONLY, D1030-
4	916596	1	COVER, , -C5500
5	43138	4	SCREW, Hex, M10 x 20, 8.8, Full Thd,
6	80120099	4	BOLT, Hex, M6 x 16, 8.8,
7	9501837	1	SUPPORT, , -C5500
8	140045	4	WASHER, SPRING, Belleville, M10,
9	412649	8	WASHER, SPRING, Belleville, M6,
10	9501845	1	PLATE, , -C5500
11	15896221	4	NUT, M6, Cl 10,
12	9513279	1	BRACKET, , -C5500
13	9501853	2	BUSHING, , -C5500
14	84004040	1	TRAY, BATTERY, , -C5500
14	84002287	1	TRAY, BATTERY, , D5500-
15	456028	1	CLAMP, , -C5500
15	84002281	1	CLAMP, , D5500-
16	84002275	1	COVER, , D5500-
17	9514605	1	WASHER, , D5500-
18	89514603	1	LOCK, , D5500-
19	84002347	1	PLATE, COVER, , WITHOUT COMPENSATION, -C0036
20	84002429	1	, WITHOUT COMPENSATION, -C0036
21	9504603	1	GASKET, , D1030-
22	84002428	1	PLATE, COVER, , WITHOUT COMPENSATION, -C0036
23	84002309	1	GUARD, , WITH COMPENSATION, -C0036
24	84002306	1	GUARD, , WITH COMPENSATION, -C0036
25	412684	AR	SCREW, , WITH COMPENSATION, D5500-
26	84002280	2	ELEMENT, SEALING, , D5500-
27	84037664	1	BRACKET, , FOR TX67 ONLY, D1030-

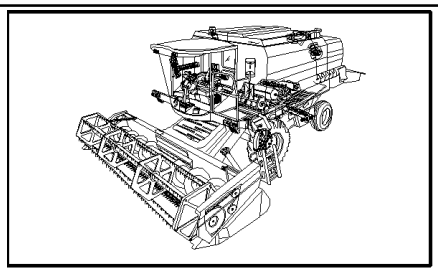

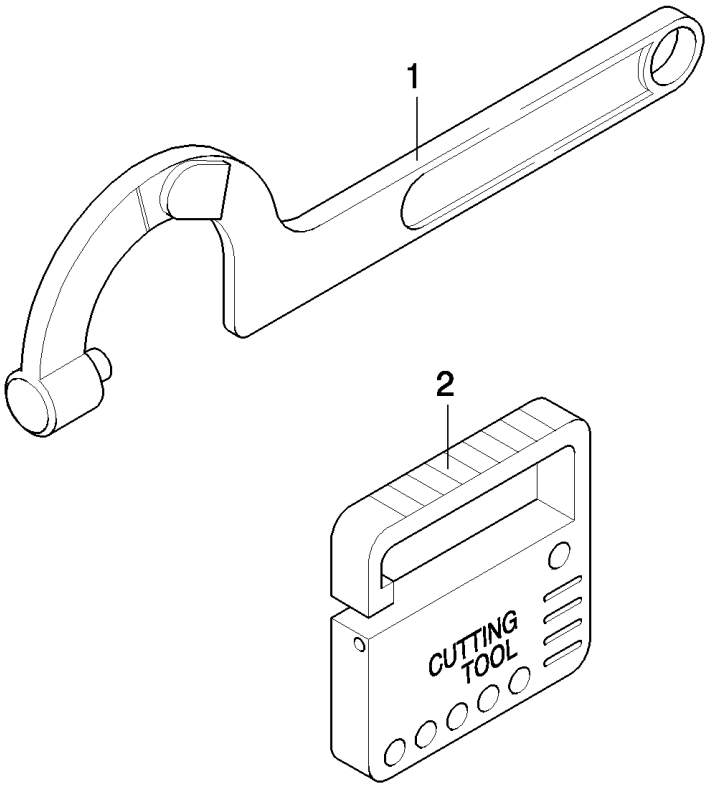
1
2
CUTTING
TOOL

10.08(01) SPECIAL TOOLS

ссылка	Номер детали	Кол-во	Описание
1	84038578	1	TOOL, SPECIAL, DIA.:35-50MM
1	84038579	1	TOOL, SPECIAL, DIA.:50-80MM
2	84043810	1	TOOL, SPECIAL, OPTIC CABLE KNIFE

10.09(01) FRONT GUARD, RH

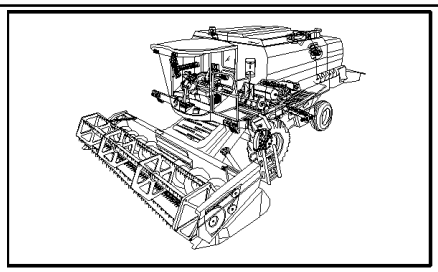

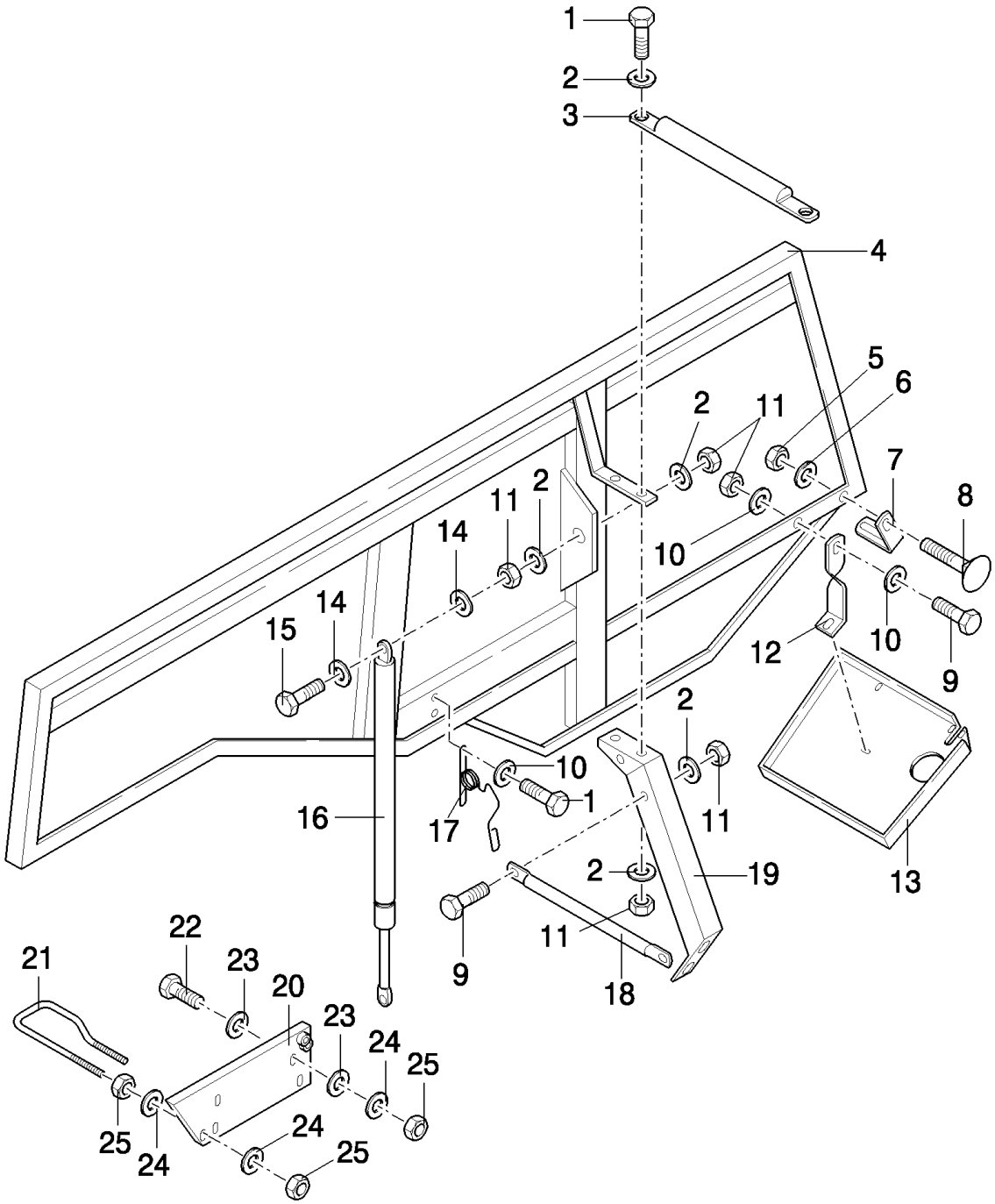

TX68 COMBINE - BASE UNIT

10.09(01) FRONT GUARD, RH

ссылка	Номер детали	Кол-во	Описание
1	120104	AR	SCREW, Hex, M8 x 20, 8.8,
2	322358	AR	WASHER, SPRING, Belleville, M8,
3	84015322	1	SUPPORT, , FOR TX66-68 ONLY, -C7520
3	84037268	1	SUPPORT, , FOR TX66-68 ONLY, D7520-
3	84021579	1	SUPPORT, , FOR TX62-64-65 ONLY, -C7520
3	84037269	1	SUPPORT, , FOR TX62-63-64-65 ONLY, D7520-
3	84037269	1	SUPPORT, , FOR TX67 ONLY
4	9831472	1	SHIELD, , -C4540
4	84017409	1	SHIELD, , -C0055
4	84429232	1	SHIELD, , D1170-
5	337475	2	NUT, M12, Cl 10,
6	140046	2	WASHER, Belleville, M12,
7	9831495	2	SUPPORT,
8	120044	2	BOLT, CARRIAGE, Short NK, M12 x 30, Cl8.8, Full Thd,
9	43127	3	BOLT, Hex, M8 x 25, 8.8,
10	412650	4	WASHER, Belleville, M8,
11	9706690	4	NUT, M8, Cl 8,
12	9831516	1	BRACKET, , FOR TX62-63-64-65-66-68 ONLY
12	84042477	1	BRACKET, , FOR TX67 ONLY
13	9831488	1	SHIELD, , FOR TX66-68 ONLY
13	89831576	1	SHIELD, , FOR TX62-63-64-65 ONLY
13	84037165	1	SHIELD, , FOR TX67 ONLY
14	80394628	4	WASHER, LOCK,
15	412476	2	SCREW, Cross Oval Hd, M4 x 100,
16	89814770	1	SHOCK ABSORBER,
17	9512923	2	SPRING, , -C4540
17	84015292	2	LOCK, , D4540-
18	9837159	1	SUPPORT, , FOR TX66-68 ONLY, -C4540
18	84018480	1	SUPPORT, , FOR TX66-68 ONLY, WITH VARIABLE BEATER DRIVE ONLY, D4540-
18	84018481	1	SUPPORT, , FOR TX62-63-64-65-67 ONLY
18	84038009	1	SUPPORT, , WITH CONSTANT BEATER DRIVE ONLY, FOR TX68 ONLY
19	84012388	1	SUPPORT, , FOR TX66-68 ONLY
19	89837128	1	SUPPORT, , FOR TX62-63-64-65 ONLY
19	84036447	1	SUPPORT, , FOR TX67 ONLY
20	9831276	1	PLATE,
21	84012331	1	CLAMP,
22	11106231	2	BOLT, Hex, M10 x 25, 10.9, Full Thd,
23	378244	10	WASHER, M10,
24	140045	10	WASHER, SPRING, Belleville, M10,
25	100016	6	NUT, M10, Cl 8,

10.10(01) FRONT GUARD, RH

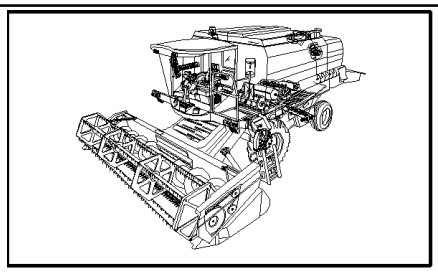

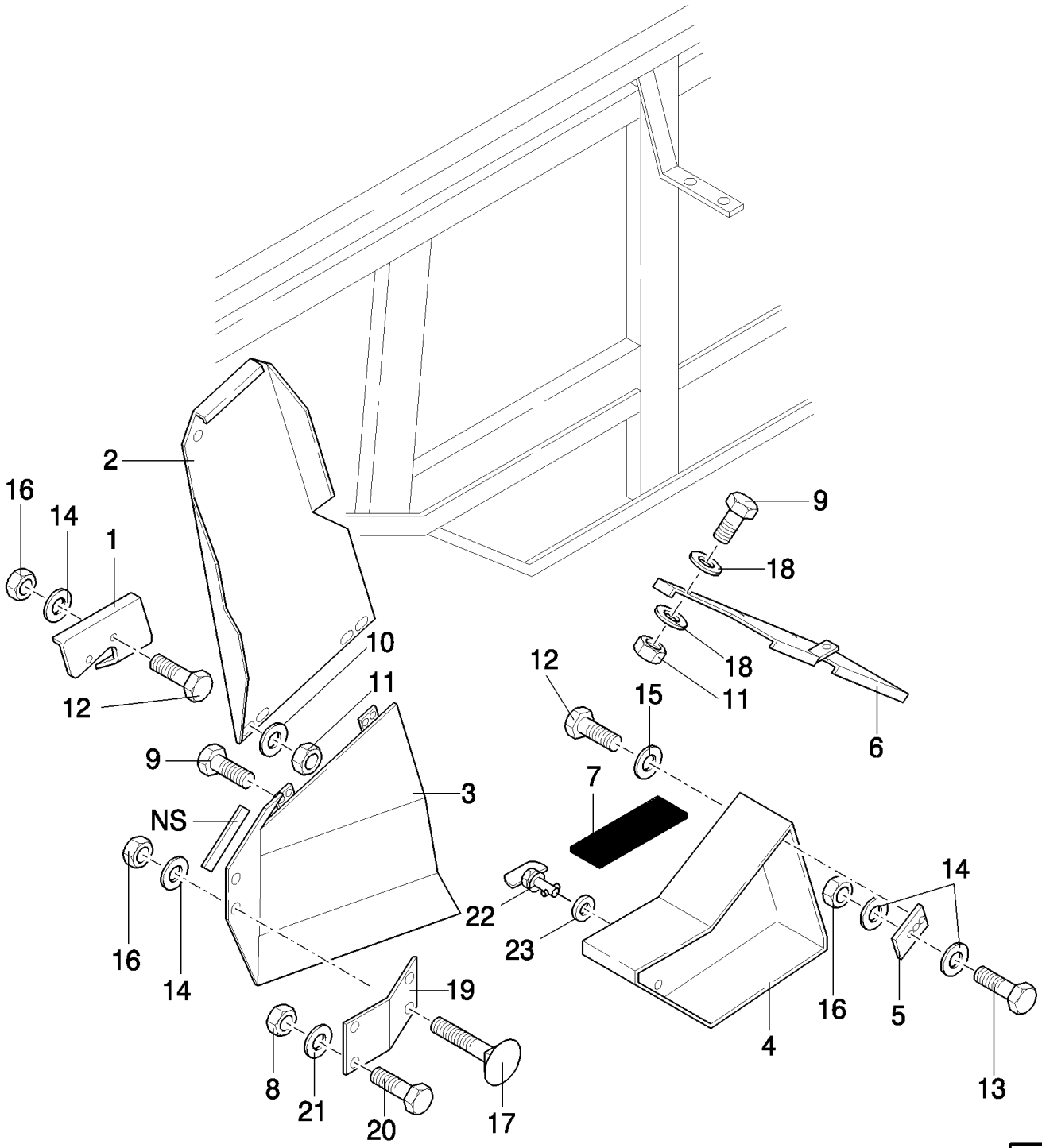

TX68 COMBINE - BASE UNIT

10.10(01) FRONT GUARD, RH

ссылка	Номер детали	Кол-во	Описание
1	84001245	1	PLATE,
2	84002866	1	SHIELD, , FOR TX62-64-65-66-68 ONLY
2	84002868	1	SHIELD, , FOR TX63-67 ONLY
3	9812642	1	SHIELD,
4	84015579	1	SHIELD, , FOR TX66-67-68 ONLY
4	84014173	1	SHIELD, , FOR TX62-63-64-65 ONLY
5	84015583	1	BRACKET, , FOR TX66-67-68 ONLY
6	89837993	1	, FOR TX66-68 ONLY, -C4540
6	84017225	1	SHIELD, , FOR TX66-67-68 ONLY, D4540-
6	84014096	1	SHIELD, , FOR TX62-63-64-65 ONLY
7	401502	AR	STRIP, ANTI-SKID, 51mm x 18.3 Roll - Cut to Size
8	100020	2	NUT, M16, Cl 8,
9	80120099	8	BOLT, Hex, M6 x 16, 8.8,
10	412649	4	WASHER, SPRING, Belleville, M6,
11	15896221	8	NUT, M6, Cl 10,
13	43127	AR	BOLT, Hex, M8 x 25, 8.8,
14	322358	AR	WASHER, SPRING, Belleville, M8,
15	412650	AR	WASHER, Belleville, M8,
16	9706690	AR	NUT, M8, Cl 8,
17	86507486	2	BOLT, CARRIAGE, Short NK, M8 x 20, Cl8.8, Full Thd,
18	322357	6	WASHER, SPRING, Belleville, M6,
19	446424	1	SUPPORT,
20	43167	2	BOLT, Hex, M16 x 30, 8.8, Full Thd,
21	140048	2	WASHER, SPRING, Belleville, M16,
22	89514603	2	LOCK,
23	9514605	2	WASHER,
12	16043224	AR	BOLT, Hex, M8 x 16, 8.8, Full Thd,

10.11(01) FRONT GUARD, LH

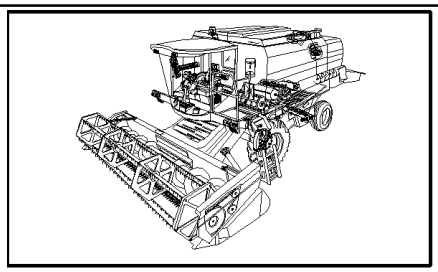

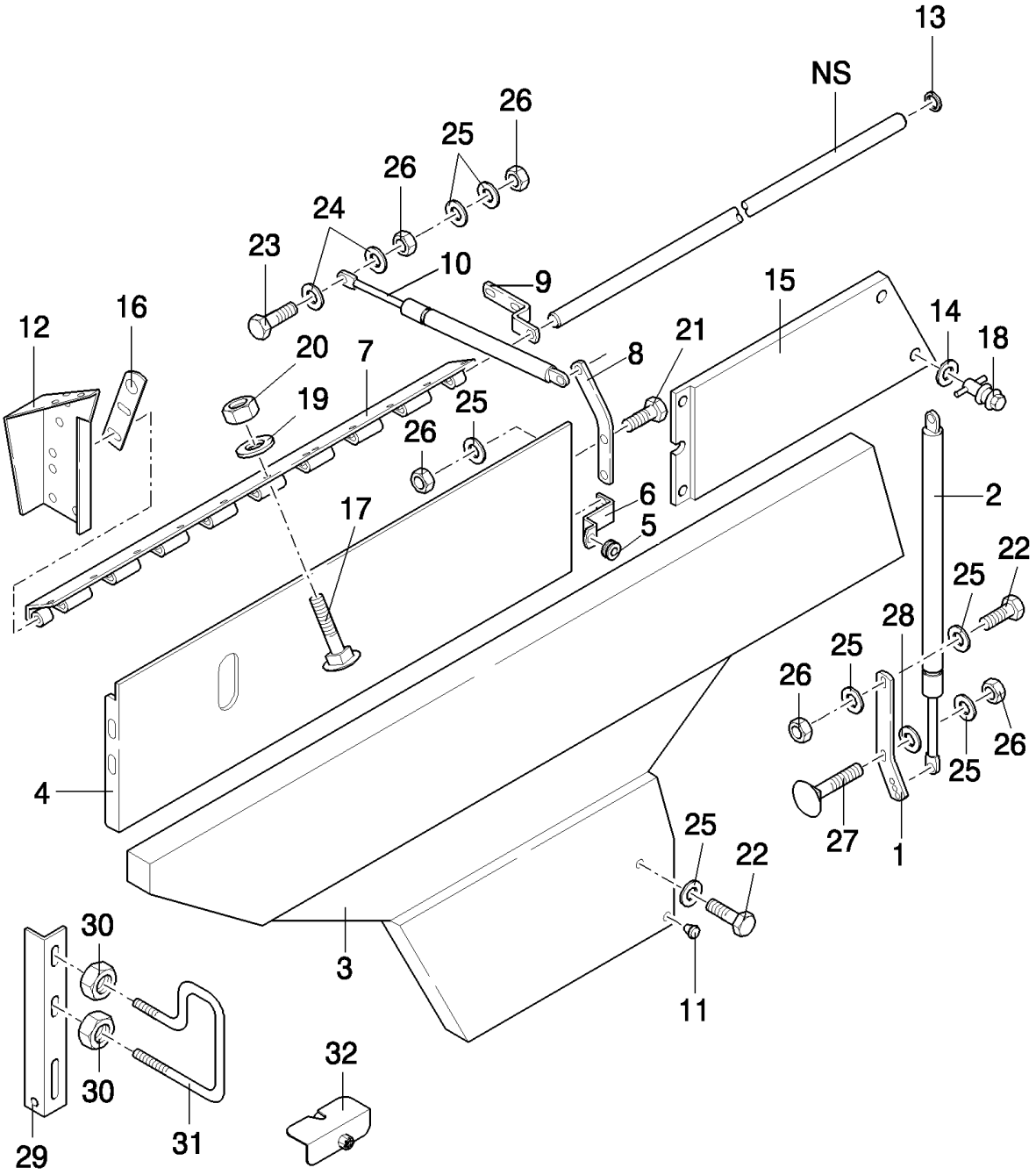

TX68 COMBINE - BASE UNIT

10.11(01) FRONT GUARD, LH

ссылка	Номер детали	Кол-во	Описание
1	84001396	1	SUPPORT,
2	89814770	1	SHOCK ABSORBER,
3	9593610	1	SHIELD, , -C4540
3	84001642	1	SHIELD, , -C0013
3	84002669	1	SHIELD, , -C0054
3	84989752	1	SHIELD, , D1170-
4	84001393	1	SHIELD,
5	334696	2	GROMMET, , -C4540
5	331231	2	GROMMET, , D4540-
6	9593623	2	BRACKET,
7	9593684	1	HINGE,
8	9593644	1	BRACKET,
9	9593808	1	BRACKET,
10	89832424	1	SHOCK ABSORBER,
11	331233	8	PLUG,
12	9593641	1	SUPPORT,
13	84007184	2	NUT,
14	9514605	4	WASHER,
15	84001584	1	SHIELD, , -C7520
15	84035389	1	SHIELD, , D7520-
16	84001395	1	SUPPORT,
17	86512439	11	SCREW, Short NK, M6 x 16, Cl8.8, Full Thd,
18	89514603	AR	LOCK,
19	412649	AR	WASHER, SPRING, Belleville, M6,
20	15896221	14	NUT, M6, Cl 10,
21	120104	2	SCREW, Hex, M8 x 20, 8.8,
22	43127	4	BOLT, Hex, M8 x 25, 8.8,
23	412479	2	BOLT, Hex, M8 x 35, 8.8,
24	80394628	4	WASHER, LOCK,
25	322358	15	WASHER, SPRING, Belleville, M8,
26	9706690	20	NUT, M8, Cl 8,
27	43465	1	BOLT, CARRIAGE, Short NK, M8 x 30, Cl8.8, Full Thd,
28	140041	2	WASHER, M8 x 28 x 3,
29	84001543	1	PLATE,
30	100016	2	NUT, M10, Cl 8,
31	84001544	1	CLAMP,
32	84015292	1	LOCK,

10.12(01) FRONT GUARD, LH

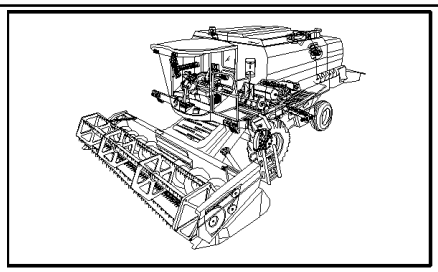

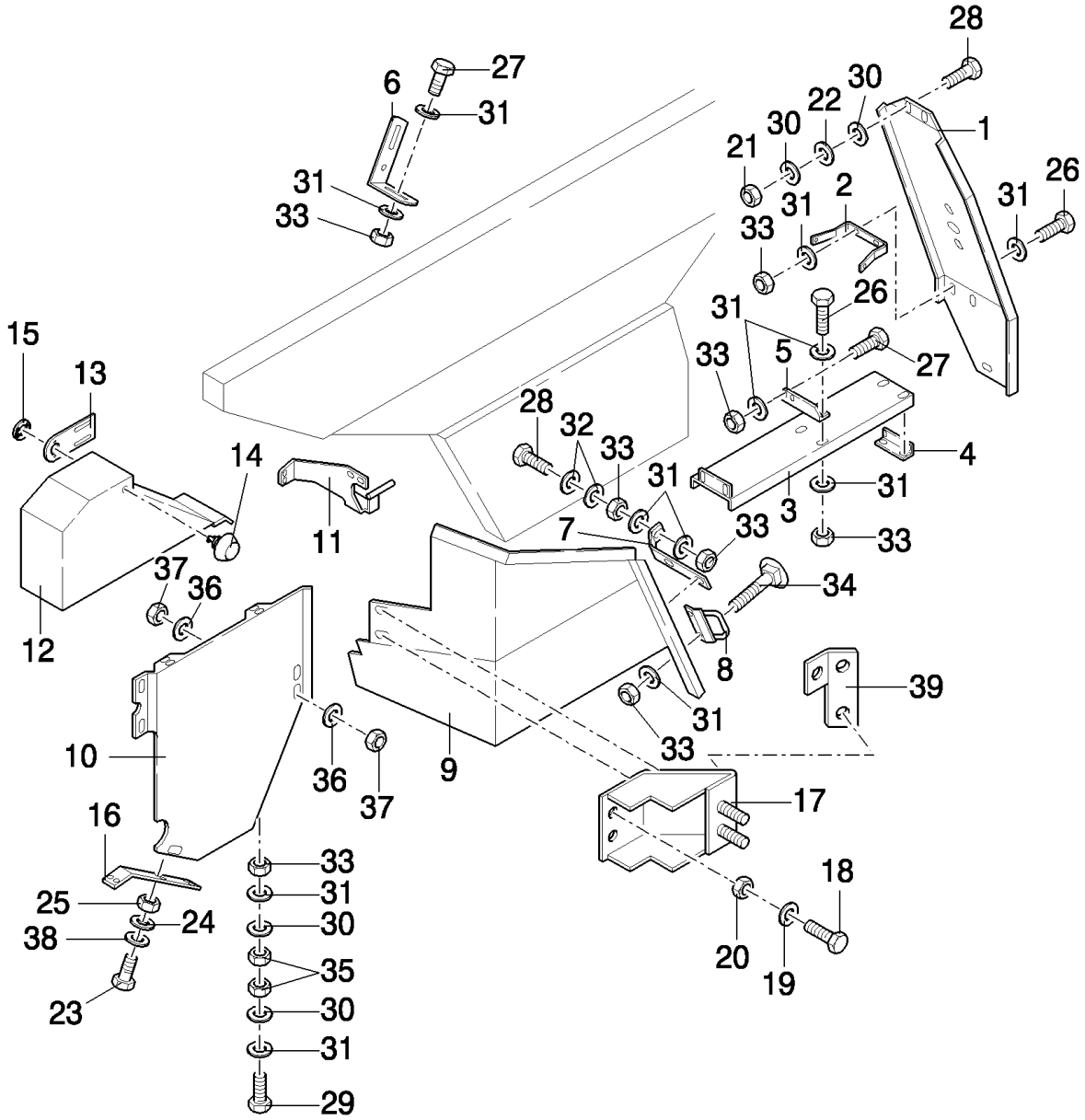

TX68 COMBINE - BASE UNIT

10.12(01) FRONT GUARD, LH

ссылка	Номер детали	Кол-во	Описание
1	89593566	1	SHIELD, , -C4540
1	84001635	1	SHIELD, , -C0013
1	84002796	1	SHIELD, , D6630-
2	446276	1	SUPPORT, , -C4540
2	84001639	1	SUPPORT, , D4540-
3	89593590	1	SHIELD, , -C4540
3	84001629	1	SHIELD, , -C0013
3	84002568	1	SHIELD, , D6630-
4	9812390	1	SUPPORT, , -C4540
4	84001633	1	SUPPORT, , -C0013
4	84002569	1	SUPPORT, , D6630-
5	9812389	1	BRACKET,
6	9838349	1	BRACKET,
7	9593564	1	SUPPORT,
8	89812397	1	CLAMP, , -C4540
8	84001544	1	CLAMP, , D4540-
9	9812683	1	SHIELD,
10	84002912	1	PLATE, , FOR TX62-63-64-65-66-68 ONLY
10	84036452	1	PLATE, , FOR TX67 ONLY
11	84035384	1	SUPPORT, , FOR TX66-68 ONLY
11	84035165	1	SUPPORT, , FOR TX62-63-64-65 ONLY
11	84036487	1	SUPPORT, , FOR TX67 ONLY
12	84002978	1	SHIELD, , FOR TX62-63-64-65-66-68 ONLY
12	84036449	1	SHIELD, , FOR TX67 ONLY
13	9837362	2	SUPPORT,
14	9831581	2	LOCK,
15	9514605	5	WASHER,
16	84015628	1	BRACKET, , FOR TX62-63-64-65-66-68 ONLY
16	84037508	1	BRACKET, , FOR TX67 ONLY
17	450195	1	SUPPORT, , FOR TX62-63-64-65-66-68 ONLY
17	84036458	1	SUPPORT, , FOR TX67 ONLY
18	43167	2	BOLT, Hex, M16 x 30, 8.8, Full Thd,
19	140048	2	WASHER, SPRING, Belleville, M16,
20	100020	2	NUT, M16, Cl 8,
21	86629542	2	NUT, LOCK, M8 x 1.25, Cl 8,
22	358817	2	WASHER,
23	120100	8	BOLT, Hex, M6 x 20, 8.8,
24	412649	8	WASHER, SPRING, Belleville, M6,
25	15896221	4	NUT, M6, Cl 10,
26	120104	10	SCREW, Hex, M8 x 20, 8.8,
27	43127	8	BOLT, Hex, M8 x 25, 8.8,
28	43128	6	BOLT, Hex, M8 x 30, 8.8,
29	412479	4	BOLT, Hex, M8 x 35, 8.8,
30	378243	8	WASHER, M8,

TX68 COMBINE - BASE UNIT

10.12(01) FRONT GUARD, LH

ссылка	Номер детали	Кол-во	Описание
31	322358	20	WASHER, SPRING, Belleville, M8,
32	412650	20	WASHER, Belleville, M8,
33	9706690	20	NUT, M8, Cl 8,
34	86507486	6	BOLT, CARRIAGE, Short NK, M8 x 20, Cl8.8, Full Thd,
35	100097	4	NUT, Thin, M8 x 1.25, Cl 04,
36	140045	10	WASHER, SPRING, Belleville, M10,
37	354720	4	NUT, Thin, M10 x 1.5, Cl 04,
38	140040	2	WASHER, M6 x 22 x 2,
39	84045100	1	BRACKET,

10.13(01) REAR GUARDS, RH

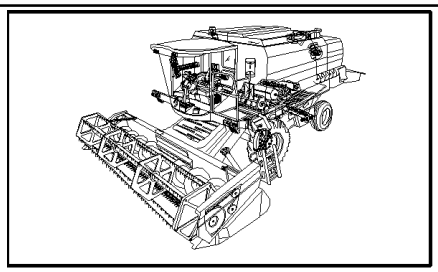

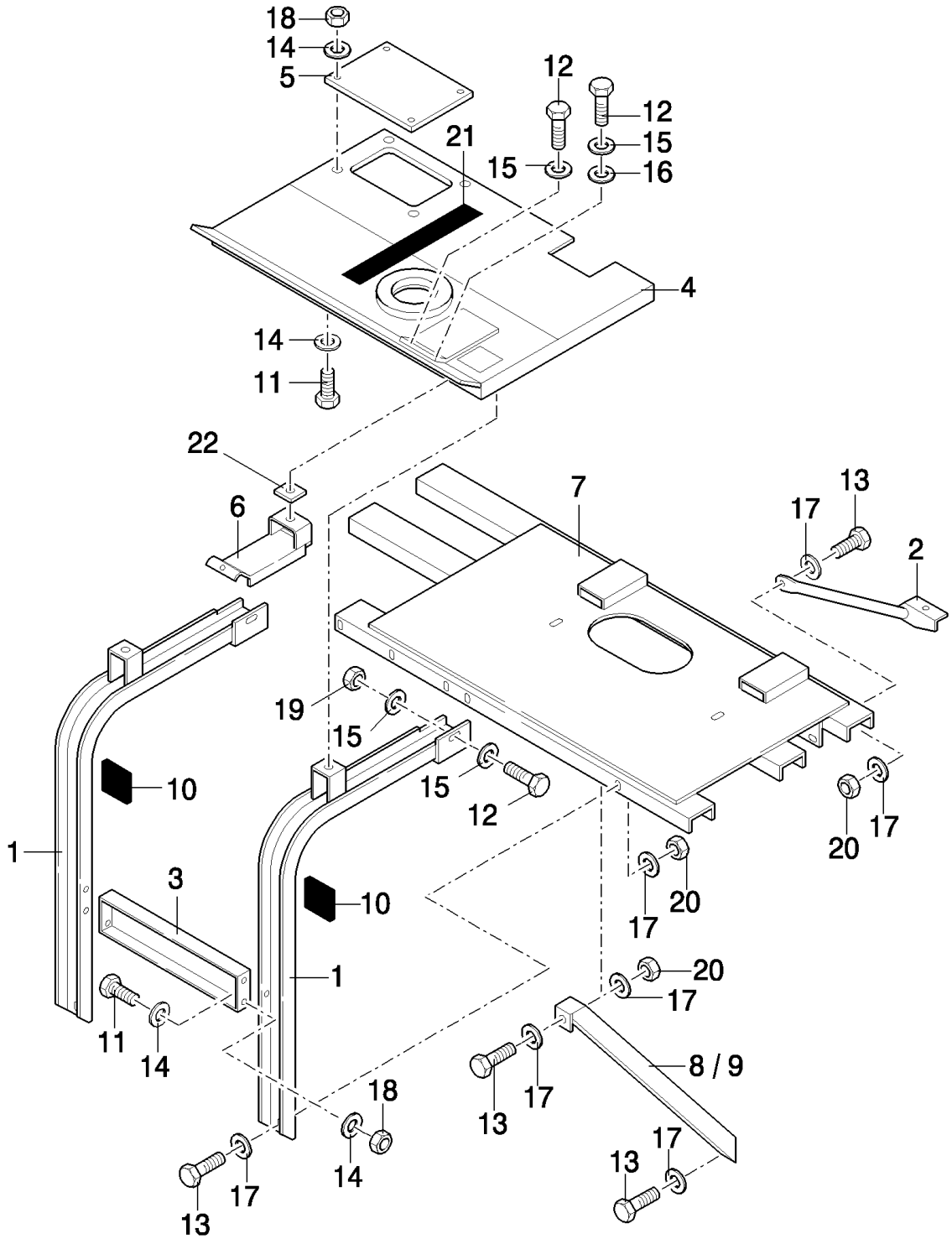

TX68 COMBINE - BASE UNIT

10.13(01) REAR GUARDS, RH

ссылка	Номер детали	Кол-во	Описание
1	9839562	2	SUPPORT, , FOR TX66-68 ONLY, -C1032
1	9839562	2	SUPPORT, , NOT FOR TX68PLUS, FOR TX68 ONLY, -C0046
1	84045391	2	SUPPORT, , FOR TX66-68 ONLY, FOR TX68PLUS ONLY, D1033-
1	84045391	2	SUPPORT, , NOT FOR TX68PLUS, FOR TX68 ONLY, D1077-
1	84037203	2	SUPPORT, , FOR TX67 ONLY
1	9507137	2	SUPPORT, , FOR TX62-64-65 ONLY, -C1032
1	84041273	2	SUPPORT, , FOR TX65 ONLY, D1033-
1	84039186	2	SUPPORT, , FOR TX62-63-64 ONLY, D1033-
2	84007003	1	SUPPORT, , FOR TX62-64-65-66 ONLY, -C1032
2	84007003	1	SUPPORT, , FOR TX68 ONLY, NOT FOR TX68PLUS, -C1076
2	84042748	1	SUPPORT, , NOT FOR TX68PLUS, FOR TX68 ONLY, D1077-
2	84042748	1	SUPPORT, , FOR TX68PLUS ONLY, FOR TX65-66-67-68 ONLY, D1030-
2	84042919	1	SUPPORT, , FOR TX62-63-64 ONLY, D1033-
3	9501094	1	SUPPORT,
4	9832666	1	PLATFORM, , FOR TX68PLUS ONLY, FOR TX62-64-65-66-68 ONLY, -C1032
4	9832666	1	PLATFORM, , NOT FOR TX68PLUS, FOR TX68 ONLY, -C1076
4	84031634	1	PLATFORM, , FOR TX62-63-64-65 ONLY, D1033-
4	84037153	1	PLATFORM, , FOR TX67 ONLY
4	84031645	1	PLATFORM, , FOR TX68PLUS ONLY, FOR TX66 ONLY, D1033-
4	84031645	1	PLATFORM, , NOT FOR TX68PLUS, FOR TX68 ONLY, D1077-
5	918789	1	PLATE,
6	9837522	1	SUPPORT, , FOR TX66-68 ONLY, FOR TX68PLUS ONLY, -C1032
6	9837522	1	SUPPORT, , NOT FOR TX68PLUS, FOR TX68 ONLY, -C1076
6	89837523	1	SUPPORT, , FOR TX62-64-65 ONLY, -C1032
6	84036465	1	SUPPORT, , D1030-
6	84036465	1	SUPPORT, , FOR TX68 ONLY, NOT FOR TX68PLUS, D1077-
7	84015781	1	SUPPORT, , FOR TX66 ONLY, -C1032
7	9819952	1	SUPPORT, , FOR TX62-64-65 ONLY, -C1032
7	84015781	1	SUPPORT, , NOT FOR TX68PLUS, FOR TX68 ONLY, -C1076
7	84042075	1	SUPPORT, , FOR TX68 ONLY, NOT FOR TX68PLUS, D1077-
7	84042075	1	SUPPORT, , FOR TX68PLUS ONLY, FOR TX65-66-67-68 ONLY, D1030-
7	84042900	1	SUPPORT, , FOR TX62-63-64 ONLY, D1033-
8	84014228	1	SUPPORT, SL
9	84018276	1	SUPPORT, FS
10	9502091	2	STRIP-GASKET, , FOR TX66-67-68 ONLY
10	9502091	2	STRIP-GASKET, , FOR TX62-63-64-65 ONLY, -C1047
10	84056927	2	STRIP-GASKET, , FOR TX62-63-64-65 ONLY, D1048-
11	80120099	10	BOLT, Hex, M6 x 16, 8.8,
13	9706687	7	SCREW, Hex, M12 x 30, 8.8,
14	412649	20	WASHER, SPRING, Belleville, M6,
15	322358	14	WASHER, SPRING, Belleville, M8,
16	140041	2	WASHER, M8 x 28 x 3,
17	140046	13	WASHER, Belleville, M12,
18	15896221	8	NUT, M6, Cl 10,

TX68 COMBINE - BASE UNIT

10.13(01) REAR GUARDS, RH

ссылка	Номер детали	Кол-во	Описание
19	9706690	4	NUT, M8, Cl 8,
20	337475	5	NUT, M12, Cl 10,
21	401502	AR	STRIP, ANTI-SKID, 51mm x 18.3 Roll - Cut to Size
22	84041371	1	PLATE, COVER, , FOR TX62-67-68 ONLY, D1030-
12	16043224	5	BOLT, Hex, M8 x 16, 8.8, Full Thd,

10.14(01) REAR GUARDS, RH

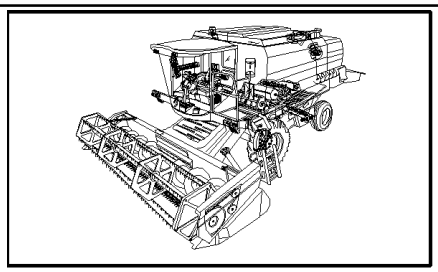

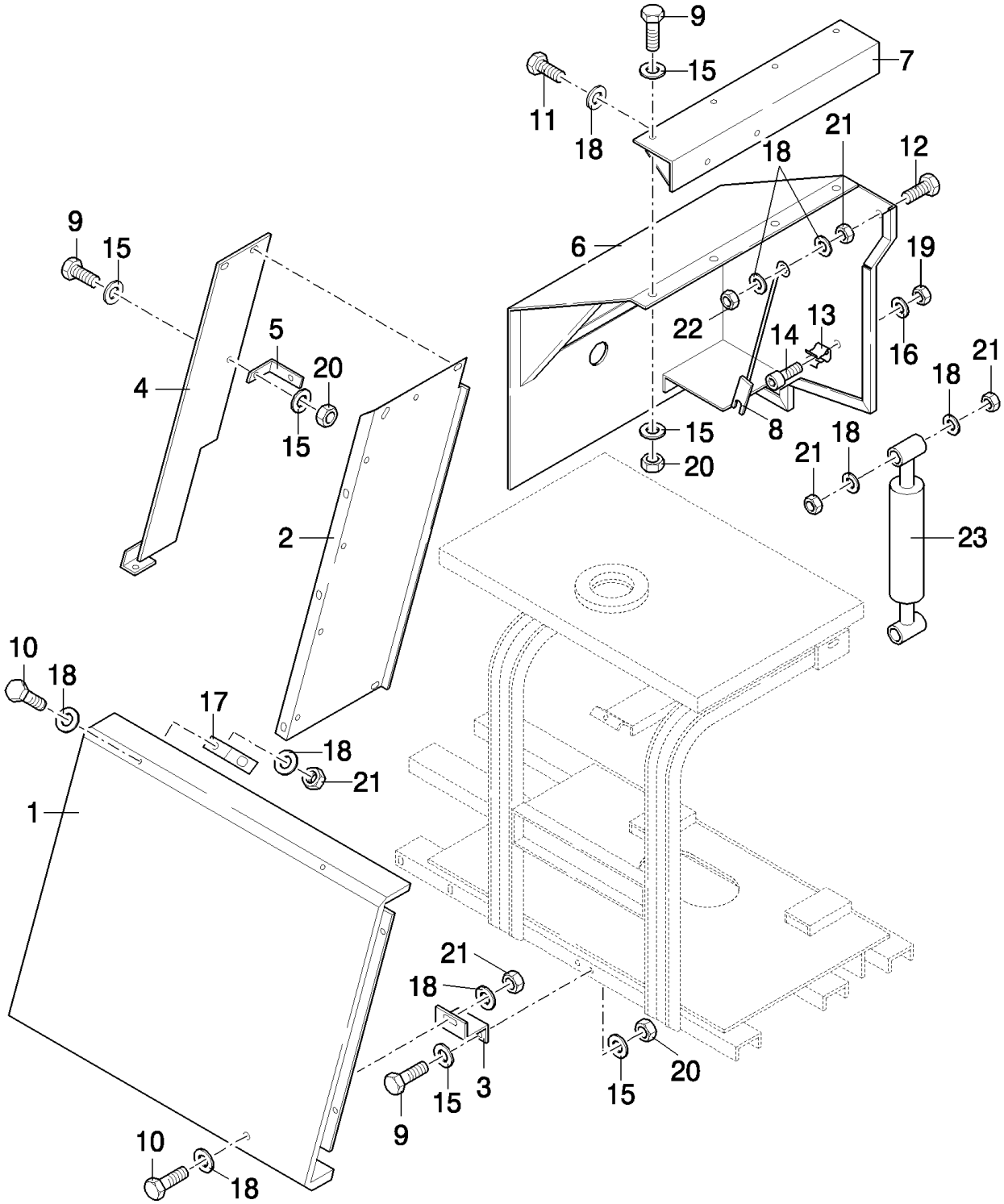

ONLY VALID UNTIL --1032999 (TX62-64-65-66-68PLUS) AND UNTIL --1076999 (NOT TX68PLUS)

TX68 COMBINE - BASE UNIT

10.14(01) REAR GUARDS, RH

ссылка	Номер детали	Кол-во	Описание
1	9831379	1	SHIELD,
2	84004003	1	SHIELD, , FOR TX66-68 ONLY
2	84004002	1	SHIELD, , FOR TX62-64-65 ONLY
3	9837526	1	SUPPORT, , FOR TX66-68 ONLY
3	89837525	1	BRACKET, , FOR TX62-64-65 ONLY
4	9818963	1	SHIELD,
5	9850536	1	SUPPORT,
6	84007401	1	SHIELD, , FOR TX66 ONLY, -C4640
6	84014637	1	SHIELD, , FOR TX66 ONLY, D4640-
6	9850837	1	SHIELD, , FOR TX68 ONLY, -C4640
6	84015474	1	SHIELD, , FOR TX68 ONLY, D4640-
6	89818579	1	SHIELD, , FOR TX62-64-65 ONLY
7	84007577	1	SUPPORT, , FOR TX66-68 ONLY
8	84007452	1	SUPPORT, , FOR TX66 ONLY, -C4640
8	84005856	1	SUPPORT, , FOR TX68 ONLY, -C4640
9	80120099	10	BOLT, Hex, M6 x 16, 8.8,
11	120104	2	SCREW, Hex, M8 x 20, 8.8,
12	43128	1	BOLT, Hex, M8 x 30, 8.8,
13	323307	1	CLAMP,
14	321803	1	SCREW, Cross Pan Hd, M4 x 10, M4x10
15	412649	14	WASHER, SPRING, Belleville, M6,
16	322355	1	WASHER, Belleville, M4,
17	84011960	1	BRACKET,
18	322358	10	WASHER, SPRING, Belleville, M8,
19	100012	1	NUT, M4, Cl 8,
20	15896221	7	NUT, M6, Cl 10,
21	9706690	3	NUT, M8, Cl 8,
22	86629542	3	NUT, LOCK, M8 x 1.25, Cl 8,
23	E7NN94231N00BB	1	GAS STRUT, , D4640-
10	16043224	2	BOLT, Hex, M8 x 16, 8.8, Full Thd,

ONLY VALID UNTIL --1032999 (TX62-64-65-66-68PLUS) AND UNTIL --1076999 (NOT TX68PLUS)

10.14A(01) REAR GUARDS, RH

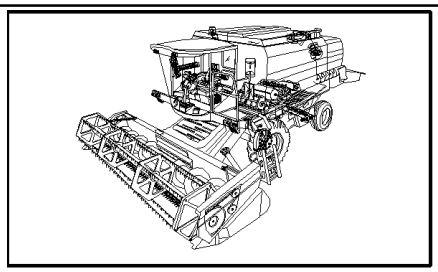

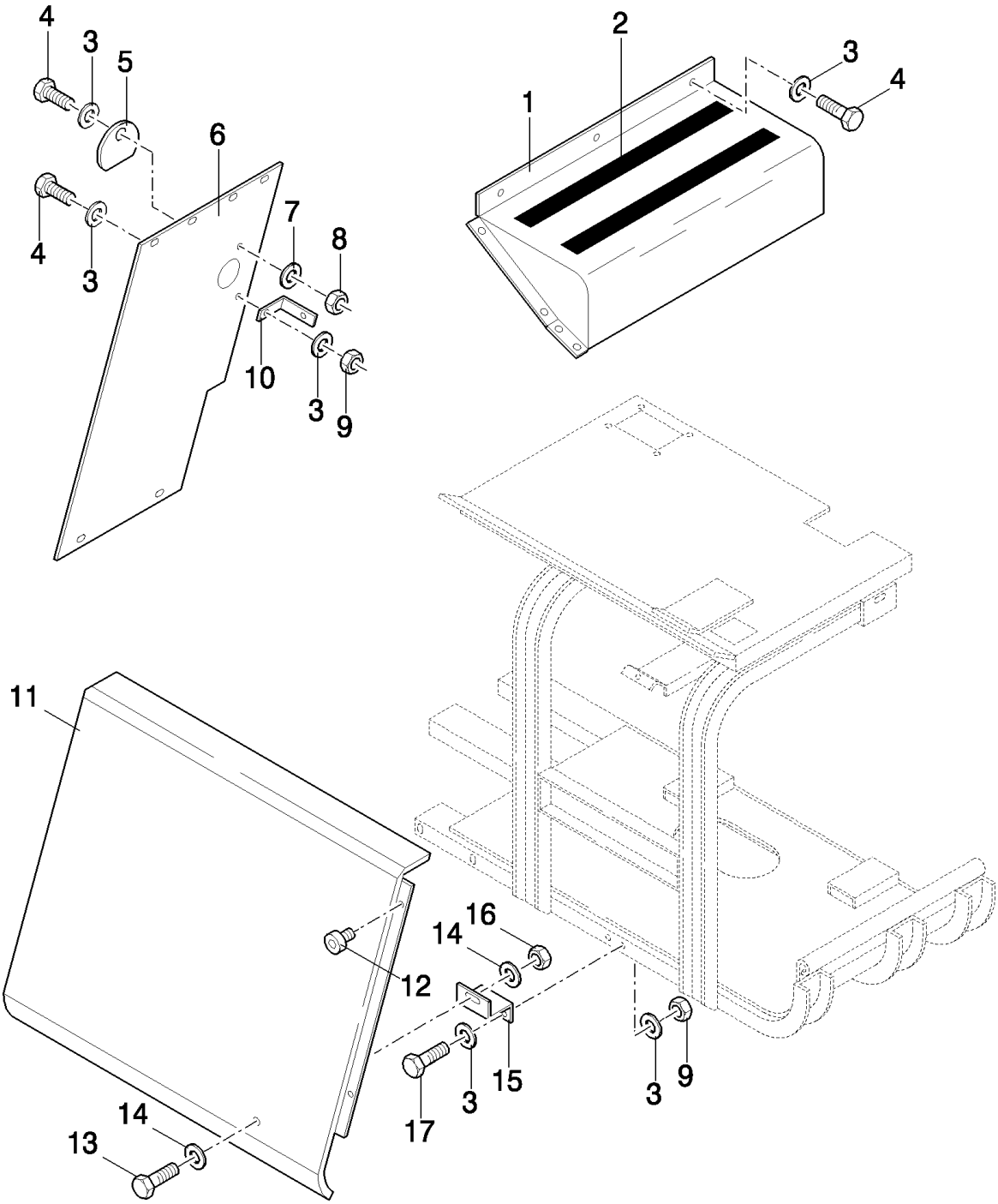

ONLY VALID FROM --1033001 (TX62-64-65-66-68PLUS) AND FROM --1077001 (NOT TX68PLUS)

TX68 COMBINE - BASE UNIT

10.14A(01) REAR GUARDS, RH

ссылка	Номер детали	Кол-во	Описание
1	84039511	1	PLATE,
2	401502	AR	STRIP, ANTI-SKID, 51mm x 18.3 Roll - Cut to Size
3	412649	15	WASHER, SPRING, Belleville, M6,
4	80120099	13	BOLT, Hex, M6 x 16, 8.8,
5	9505826	1	COVER,
6	84039530	1	GUARD, , FOR TX62-63-64-65 ONLY
6	84039019	1	GUARD, , FOR TX67 ONLY
6	84039531	1	GUARD, , FOR TX66-68 ONLY
7	300366	1	WASHER, 6MM
8	353308	1	NUT, M6 x 1, Cl 8,
9	15896221	1	NUT, M6, Cl 10,
10	84041995	1	BRACKET,
11	84041003	1	GUARD,
12	331233	2	PLUG,
14	322358	1	WASHER, SPRING, Belleville, M8,
15	89837525	1	BRACKET, , FOR TX62-63-64-65 ONLY
15	84039016	1	BRACKET, , FOR TX67 ONLY
15	84039164	1	BRACKET, , FOR TX66-68 ONLY
16	9706690	1	NUT, M8, Cl 8,
17	120100	1	BOLT, Hex, M6 x 20, 8.8,
13	16043224	1	BOLT, Hex, M8 x 16, 8.8, Full Thd,

ONLY VALID FROM --1033001 (TX62-64-65-66-68PLUS) AND FROM --1077001 (NOT TX68PLUS)

10.15(01) SERVICE STEP

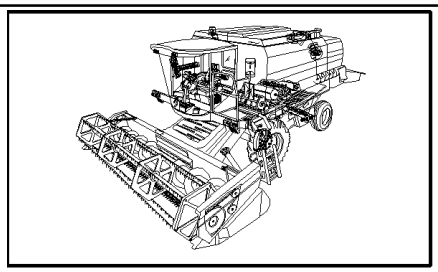

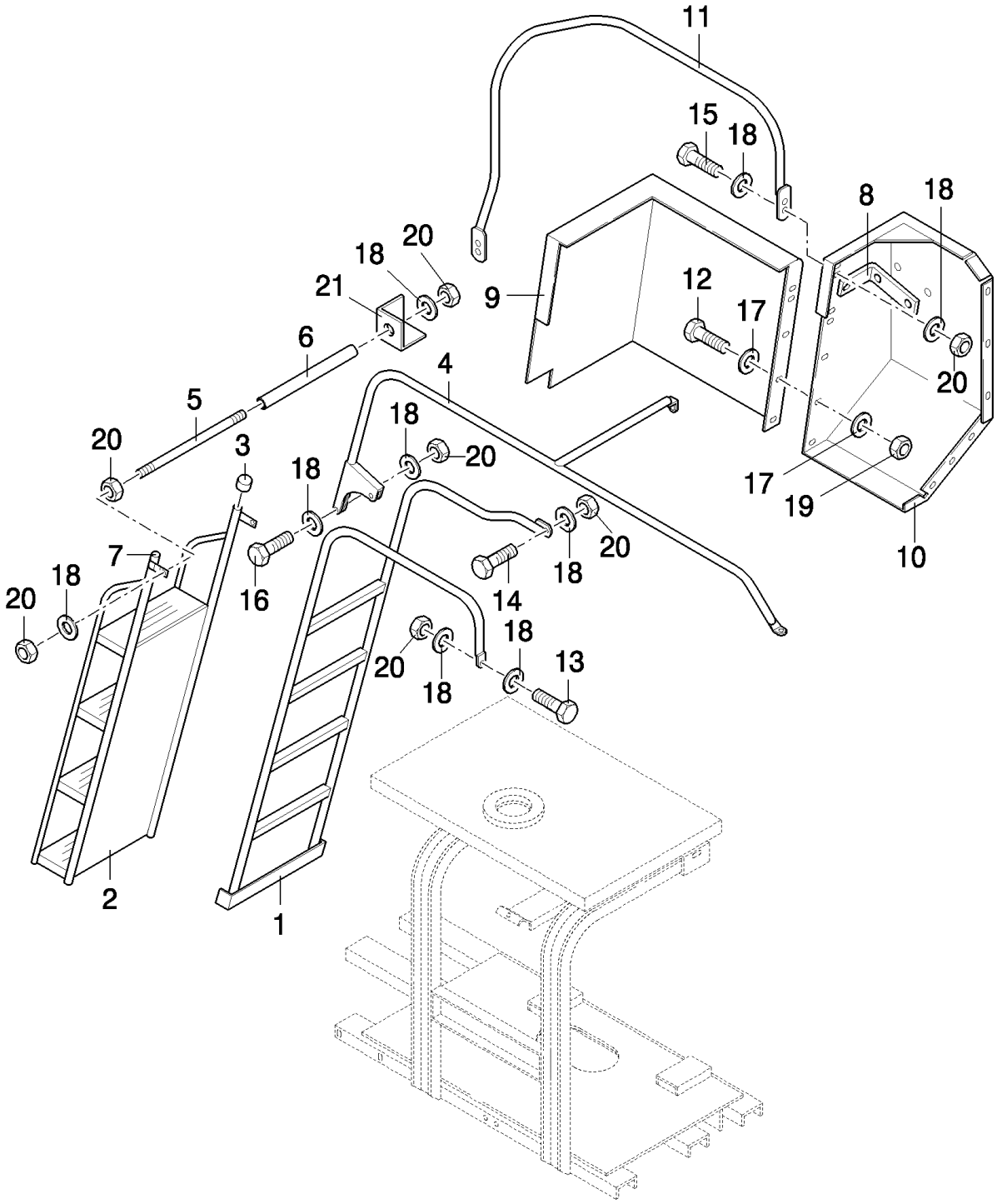

ONLY VALID UNTIL --1032999 (TX62-64-65-66-68PLUS) AND UNTIL --1076999 (NOT TX68PLUS)

TX68 COMBINE - BASE UNIT

10.15(01) SERVICE STEP

ссылка	Номер детали	Кол-во	Описание
1	9818961	1	LADDER,
2	754777	2	LADDER,
3	84014501	2	PLUG,
4	9850852	1	HANDRAIL, , FOR TX66-68 ONLY
4	89814270	1	HANDRAIL, , FOR TX62-64-65 ONLY
5	435133	1	ROD,
6	455168	1	HOSE,
7	9513055	2	COVER,
8	9835844	1	BRACKET,
9	9818581	1	SHIELD,
10	9814752	1	SHIELD, , FOR TX66-68 ONLY
10	89814749	1	SHIELD, , FOR TX62-64-65 ONLY
11	84000637	1	HANDRAIL,
12	80120099	5	BOLT, Hex, M6 x 16, 8.8,
14	120104	1	SCREW, Hex, M8 x 20, 8.8,
15	43128	2	BOLT, Hex, M8 x 30, 8.8,
16	43130	2	BOLT, Hex, M8 x 50, 8.8,
17	412649	10	WASHER, SPRING, Belleville, M6,
18	322358	11	WASHER, SPRING, Belleville, M8,
19	15896221	10	NUT, M6, Cl 10,
20	9706690	9	NUT, M8, Cl 8,
21	84039572	1	BRACKET,
13	16043224	1	BOLT, Hex, M8 x 16, 8.8, Full Thd,

ONLY VALID UNTIL --1032999 (TX62-64-65-66-68PLUS) AND UNTIL --1076999 (NOT TX68PLUS)

10.15A(01) SERVICE STEP

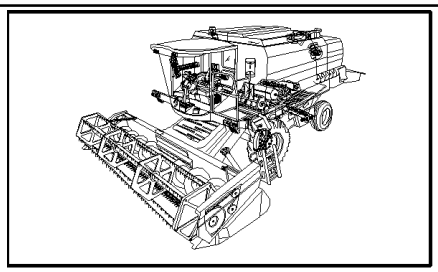

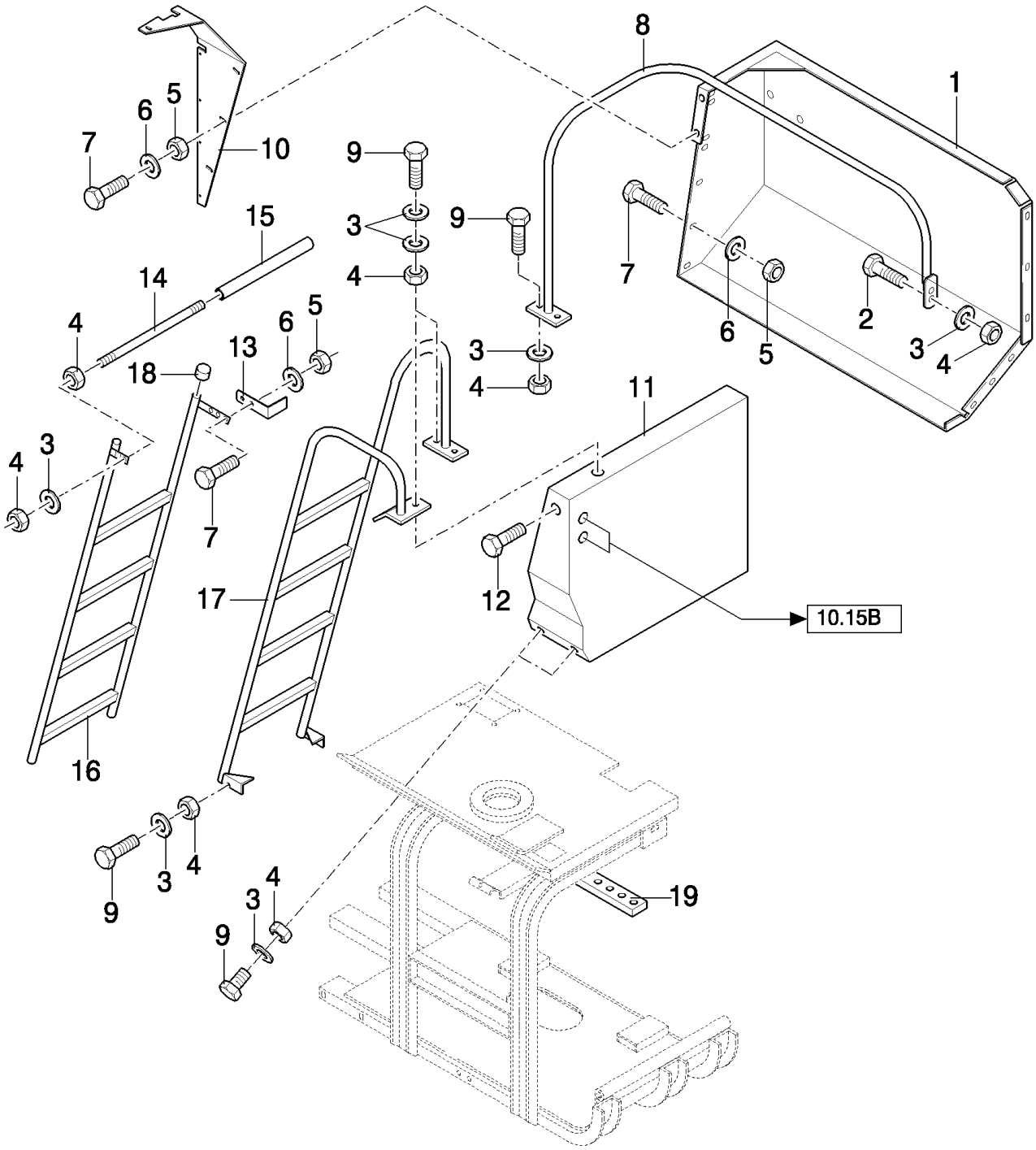

ONLY VALID FROM --1033001 (TX62-64-65-66-68PLUS) AND FROM --1077001 (NOT TX68PLUS)

TX68 COMBINE - BASE UNIT

10.15A(01) SERVICE STEP

ссылка	Номер детали	Кол-во	Описание
1	84037167	1	GUARD, , FOR TX62-63-64-65-67 ONLY
1	84036873	1	GUARD, , FOR TX66-68 ONLY
3	322358	AR	WASHER, SPRING, Belleville, M8,
4	9706690	AR	NUT, M8, Cl 8,
5	15896221	AR	NUT, M6, Cl 10,
6	412649	AR	WASHER, SPRING, Belleville, M6,
7	120100	AR	BOLT, Hex, M6 x 20, 8.8,
8	84057434	1	HANDRAIL,
9	120104	AR	SCREW, Hex, M8 x 20, 8.8,
10	84041808	1	PLATE,
11	84037138	1	GUARD, , FOR TX67 ONLY
11	84036025	1	GUARD, , FOR TX66-68 ONLY
11	84037290	1	GUARD, , FOR TX62-63-64-65 ONLY
12	158188	1	PLUG,
13	84039497	1	BRACKET,
14	435133	1	ROD,
15	455168	1	HOSE,
16	84038896	1	LADDER,
17	84031488	1	LADDER,
18	84014502	2	CAP, INTRODUCTION,
19	84038413	1	PLATE, COVER,
2	16043224	AR	BOLT, Hex, M8 x 16, 8.8, Full Thd,

ONLY VALID FROM --1033001 (TX62-64-65-66-68PLUS) AND FROM --1077001 (NOT TX68PLUS)

10.15B(01) ENGINE GUARDS

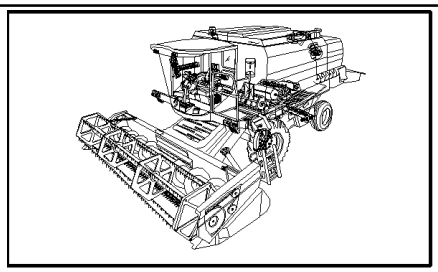

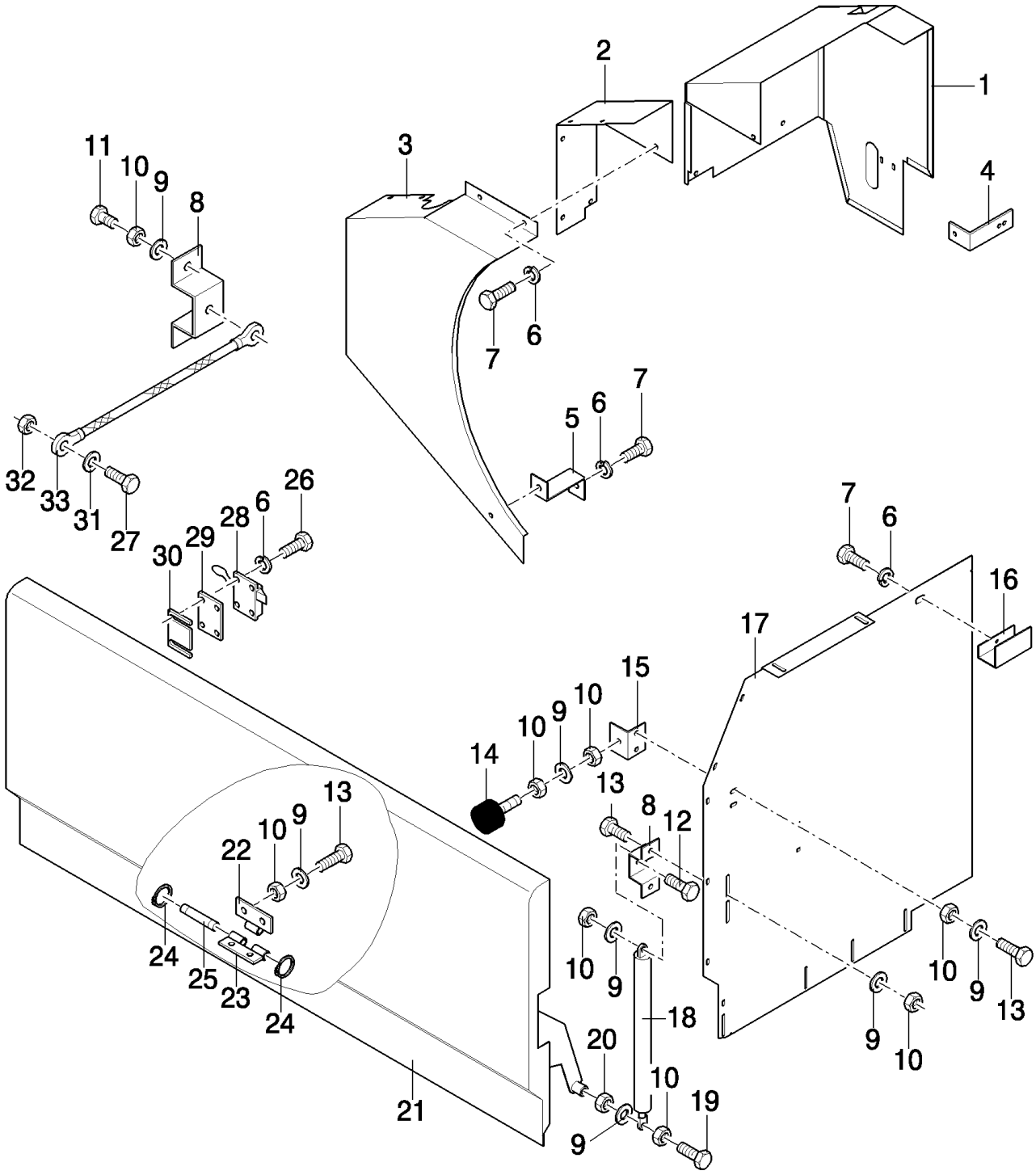

ONLY VALID FROM --1033001 (TX62-64-65-66-68PLUS) AND FROM --1077001 (NOT TX68PLUS)

TX68 COMBINE - BASE UNIT

10.15B(01) ENGINE GUARDS

ссылка	Номер детали	Кол-во	Описание
1	84031306	1	GUARD, , FOR TX67 ONLY, -C1032
1	84045594	1	GUARD, , NOT FOR TX68PLUS, D1033-
1	84039340	1	GUARD, , FOR TX68PLUS ONLY, D1033-
2	84036889	1	GUARD,
3	84031307	1	GUARD,
4	84038235	1	BRACKET,
5	84019881	1	SUPPORT,
6	412649	AR	WASHER, SPRING, Belleville, M6,
7	80120099	AR	BOLT, Hex, M6 x 16, 8.8,
8	84041747	3	BRACKET,
9	322358	AR	WASHER, SPRING, Belleville, M8,
10	9706690	AR	NUT, M8, Cl 8,
12	43465	2	BOLT, CARRIAGE, Short NK, M8 x 30, Cl8.8, Full Thd,
13	86507486	AR	BOLT, CARRIAGE, Short NK, M8 x 20, Cl8.8, Full Thd,
14	84041274	1	DAMPER,
15	84036459	1	BRACKET,
16	84038374	1	BRACKET, , FOR TX66-67-68 ONLY
17	84031455	1	PLATE, , FOR TX62-63-64-65 ONLY
17	84018266	1	PLATE, , FOR TX66-68 ONLY, NOT FOR TX68PLUS
17	84037159	1	PLATE, , FOR TX67 ONLY
17	84041866	1	PLATE, , FOR TX68PLUS ONLY
18	89832424	1	SHOCK ABSORBER,
19	120107	1	BOLT, Hex, M8 x 50, 8.8, Full Thd,
20	86629542	1	NUT, LOCK, M8 x 1.25, Cl 8,
21	84031563	1	GUARD,
22	84036227	3	HINGE,
23	84036226	3	HINGE,
24	11065976	6	RING, SNAP, M10, Ext,
25	84038376	3	SHAFT,
26	86977786	2	BOLT, Hex, M6 x 25, 8.8,
27	43127	AR	BOLT, Hex, M8 x 25, 8.8,
28	168927	2	LATCH,
29	84038375	1	PLATE, COVER,
30	84039163	AR	PLATE, ADJUSTING,
31	140041	AR	WASHER, M8 x 28 x 3,
32	86629542	AR	NUT, LOCK, M8 x 1.25, Cl 8,
33	84039434	2	CABLE,
11	16043224	2	BOLT, Hex, M8 x 16, 8.8, Full Thd,

ONLY VALID FROM --1033001 (TX62-64-65-66-68PLUS) AND FROM --1077001 (NOT TX68PLUS)

10.16(01) ENGINE GUARDS

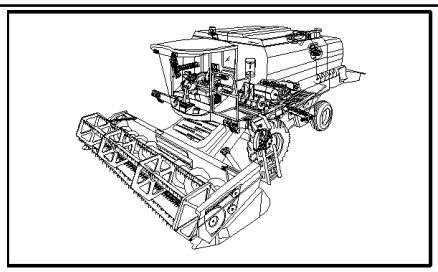

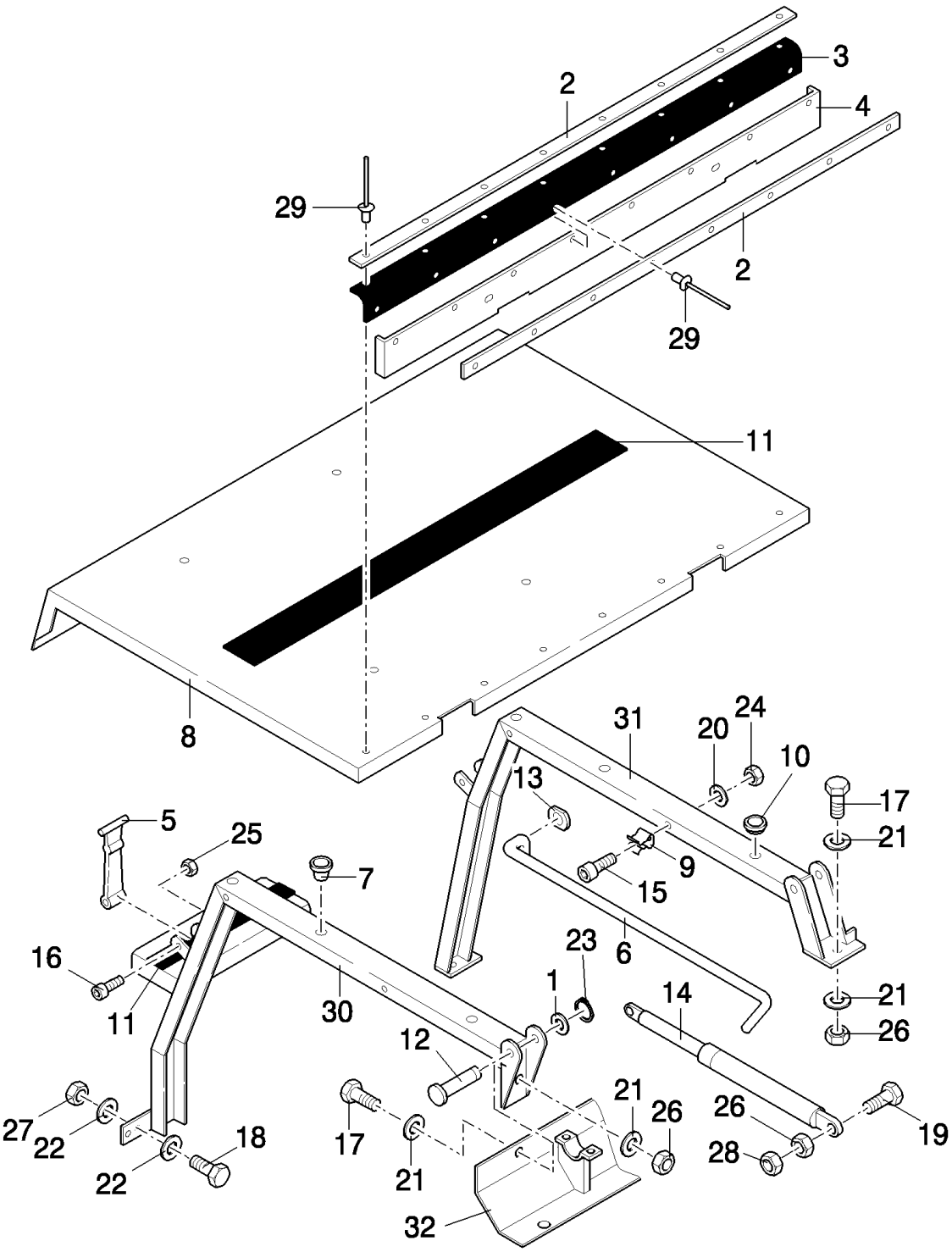

TX68 COMBINE - BASE UNIT

10.16(01) ENGINE GUARDS

ссылка	Номер детали	Кол-во	Описание
1	300624	2	RING, SNAP, M12, Ext,
2	9850733	2	PLATE, FIXING, , FOR TX68PLUS ONLY, FOR TX66 ONLY, -C1032
2	9850733	2	PLATE, FIXING, , NOT FOR TX68PLUS, FOR TX68 ONLY, -C1076
2	9508593	2	PLATE, FIXING, , FOR TX62-63-64-65 ONLY, -C1032
3	9850732	1	CANVAS, , FOR TX66-68 ONLY, -C6670
3	84036054	1	CANVAS, , FOR TX66-68 ONLY, FOR TX68PLUS ONLY, -C0034
3	84036054	1	CANVAS, , NOT FOR TX68PLUS, FOR TX68 ONLY, -C1076
3	9508527	1	CANVAS, , FOR TX62-64-65 ONLY, -C6670
3	84036799	1	CANVAS, , FOR TX62-64-65 ONLY, -C0034
4	84007456	1	PLATE, COVER, , FOR TX66 ONLY, -C4640
4	84014654	1	PLATE, COVER, , FOR TX66 ONLY, -C0034
4	9850729	1	SHIELD, , FOR TX68PLUS ONLY, -C1032
4	9850729	1	SHIELD, , NOT FOR TX68PLUS, FOR TX68 ONLY, -C1076
4	89835945	1	PLATE, COVER, , FOR TX62-64-65 ONLY, -C6670
4	84036798	1	PLATE, COVER, , FOR TX62-64-65 ONLY, -C0034
5	353067	2	HANDLE, , -C6670
6	9502004	1	SUPPORT, , FOR TX66 ONLY, -C4640
6	9502004	1	SUPPORT, , FOR TX62-64-65 ONLY, -C6670
7	158188	6	PLUG,
8	9835960	1	PANEL, ENGINE HOOD, , FOR TX66 ONLY, -C4640
8	84019133	1	PANEL, ENGINE HOOD, , FOR TX66 ONLY, -C0014
8	84036327	1	PANEL, ENGINE HOOD, , FOR TX66 ONLY, -C0034
8	84019136	1	PANEL, ENGINE HOOD, , FOR TX68 ONLY, -C6670
8	84036179	1	PANEL, ENGINE HOOD, , FOR TX68PLUS ONLY, -C0034
8	84036179	1	PANEL, ENGINE HOOD, , NOT FOR TX68PLUS, FOR TX68 ONLY, -C0046
8	89814353	1	PANEL, ENGINE HOOD, , FOR TX62-64-65 ONLY, -C6670
8	84036806	1	PANEL, ENGINE HOOD, , FOR TX62-64-65 ONLY, -C0034
8	84042652	1	PANEL, ENGINE HOOD, , FOR TX62-63-64-65-66-67 ONLY, D1030-
8	84042652	1	PANEL, ENGINE HOOD, , FOR TX68 ONLY, NOT FOR TX68PLUS, D1077-
8	84035160	1	PANEL, ENGINE HOOD, , FOR TX68PLUS ONLY, D1033-
9	323307	2	CLAMP, , -C6670
10	331233	6	PLUG,
11	401502	1	STRIP, ANTI-SKID, 51mm x 18.3 Roll - Cut to Size
12	923016	2	PIN,
13	920829	1	CIRCLIP, , FOR TX66 ONLY, -C4640
13	920829	1	CIRCLIP, , FOR TX62-64-65 ONLY, -C6670
14	89509946	1	DAMPER,
15	321803	2	SCREW, Cross Pan Hd, M4 x 10, M4x10, -C6670
16	412658	2	SCREW, Cross Pan Hd, M4 x 40, M4x40, -C6670
17	43128	2	BOLT, Hex, M8 x 30, 8.8,
18	43140	4	BOLT, Hex, M10 x 30, 8.8, Full Thd,
19	120106	2	BOLT, Hex, M8 x 40, 8.8, Full Thd, , FOR TX68 ONLY
20	322355	2	WASHER, Belleville, M4,
21	322358	4	WASHER, SPRING, Belleville, M8,

TX68 COMBINE - BASE UNIT

10.16(01) ENGINE GUARDS

ссылка	Номер детали	Кол-во	Описание
22	140045	8	WASHER, SPRING, Belleville, M10,
23	432651	2	WASHER, 12MM
24	100012	2	NUT, M4, Cl 8,
25	385681	2	NUT, LOCK, M4 x .7, Cl 8, M4, -C6670
26	9706690	3	NUT, M8, Cl 8,
27	100016	4	NUT, M10, Cl 8,
28	86629542	1	NUT, LOCK, M8 x 1.25, Cl 8,
29	445394	16	RIVET, Pop, M4.8 x 12.7,
30	89814351	1	SUPPORT, , FOR TX66 ONLY, -C4640
30	84014723	1	SUPPORT, , FOR TX66 ONLY, -C0037
30	84000395	1	SUPPORT, , FOR TX68PLUS ONLY, -C1032
30	84000395	1	SUPPORT, , NOT FOR TX68PLUS, FOR TX68 ONLY, -C1076
30	89814351	1	SUPPORT, , FOR TX62-64-65 ONLY, -C6670
30	84036808	1	SUPPORT, , FOR TX62-64-65 ONLY, -C0034
30	84017480	1	SUPPORT, , FOR TX62-63-64-65-66-67 ONLY, D1030-
30	84017480	1	SUPPORT, , FOR TX68 ONLY, NOT FOR TX68PLUS, D1077-
30	84035144	1	SUPPORT, , FOR TX68PLUS ONLY, D1033-
31	84000902	1	SUPPORT, , FOR TX66 ONLY, -C4640
31	84014674	1	SUPPORT, , FOR TX66 ONLY, -C0037
31	9850728	1	SUPPORT, , FOR TX68PLUS ONLY, -C1032
31	9850728	1	SUPPORT, , NOT FOR TX68PLUS, FOR TX68 ONLY, -C1076
31	84000902	1	SUPPORT, , FOR TX62-64-65 ONLY, -C6670
31	84036812	1	SUPPORT, , FOR TX62-64-65 ONLY, -C0034
31	84018263	1	SUPPORT, , FOR TX62-63-64-65-66-67 ONLY, BSN F1030
31	84018263	1	SUPPORT, , FOR TX68 ONLY, NOT FOR TX68PLUS, BSN F1077
31	84461551	1	SUPPORT, , NOT FOR TX68PLUS, FOR TX68 ONLY, FOR TX62-63-64-65-66-67 ONLY, ASN D480
31	84035142	1	SUPPORT, , FOR TX68PLUS ONLY, D1033-
32	84037155	1	SUPPORT, , FOR TX62-63-64-65-66-67 ONLY
32	84037155	1	SUPPORT, , NOT FOR TX68PLUS, FOR TX68 ONLY, D1077-
32	84043916	1	SUPPORT, , FOR TX68PLUS ONLY

10.17(01) STRAW HOOD

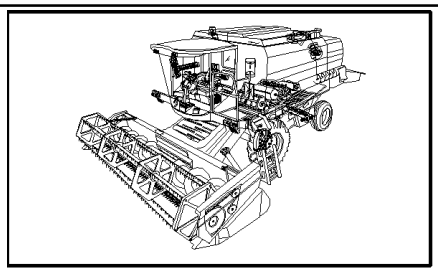

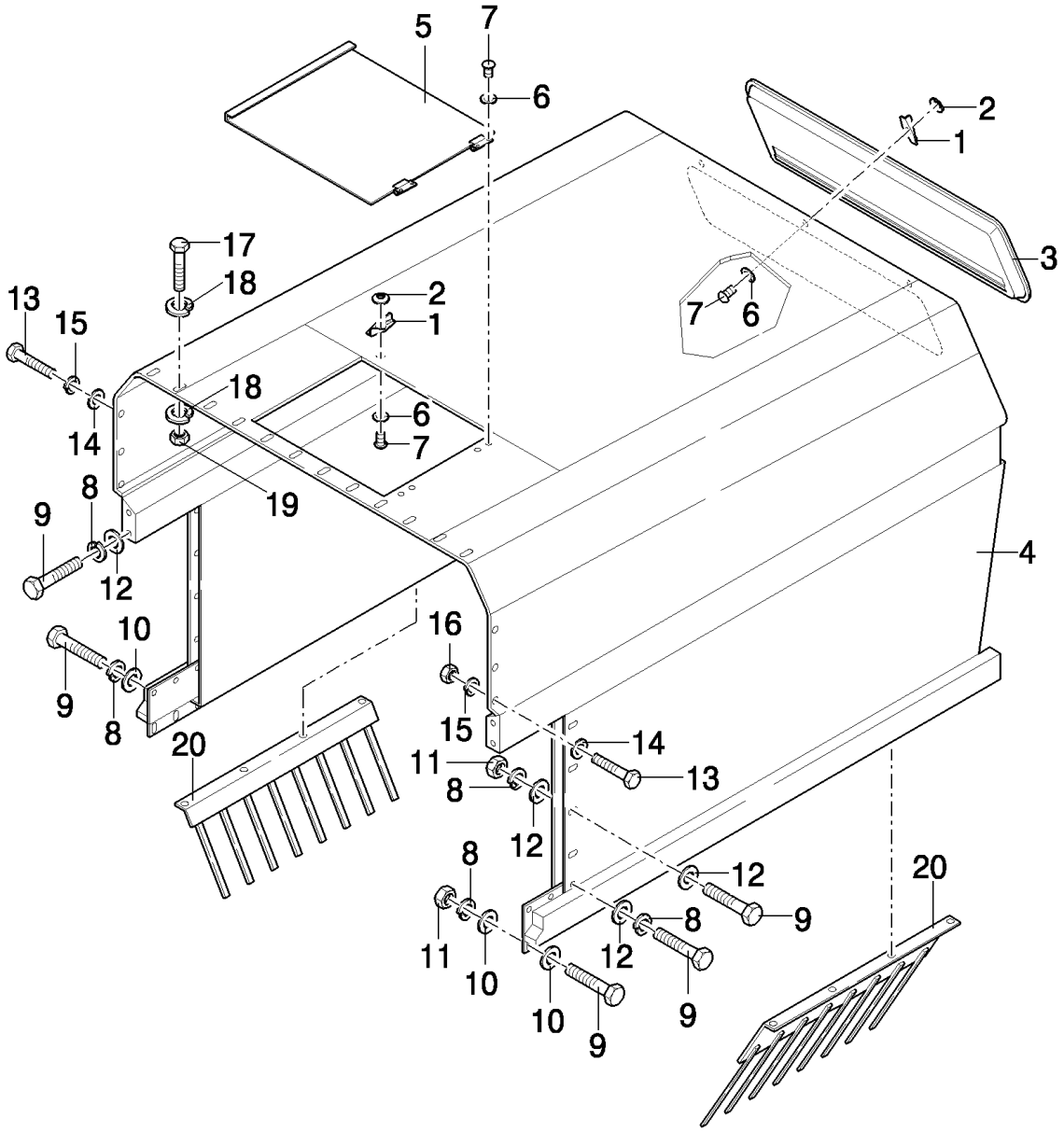

TX68 COMBINE - BASE UNIT

10.17(01) STRAW HOOD

ссылка	Номер детали	Кол-во	Описание
1	362786	4	FASTENER,
2	362785	4	WASHER,
3	9819942	1	COVER,
4	9839530	1	HOOD, STRAW, , FOR TX66-68 ONLY, -C4620
4	84017739	1	HOOD, STRAW, , FOR TX66-67-68 ONLY, -C0053
4	84429201	1	HOOD, STRAW, , FOR TX66-67-68 ONLY, D1170-
4	84018299	1	HOOD, STRAW, , FOR TX62-63-64-65 ONLY, -C1169
4	84429202	1	HOOD, STRAW, , FOR TX62-63-64-65 ONLY, D1170-
5	9814746	1	COVER,
6	335872	8	WASHER, 4MM
7	425520	8	RIVET,
8	140045	30	WASHER, SPRING, Belleville, M10,
9	43140	30	BOLT, Hex, M10 x 30, 8.8, Full Thd,
10	378244	16	WASHER, M10,
11	100016	14	NUT, M10, Cl 8,
12	140042	22	WASHER, M10 x 34 x 3,
13	120104	3	SCREW, Hex, M8 x 20, 8.8,
14	140041	3	WASHER, M8 x 28 x 3,
15	322358	3	WASHER, SPRING, Belleville, M8,
16	9706690	2	NUT, M8, Cl 8,
17	120100	12	BOLT, Hex, M6 x 20, 8.8,
18	412649	24	WASHER, SPRING, Belleville, M6,
19	15896221	12	NUT, M6, Cl 10,
20	9819870	2	RAKE,

10.18(01) COUNTERWEIGHTS, SUPPORT, MACHINES WITHOUT STRAW CHOPPER

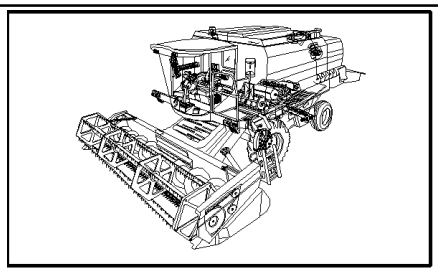

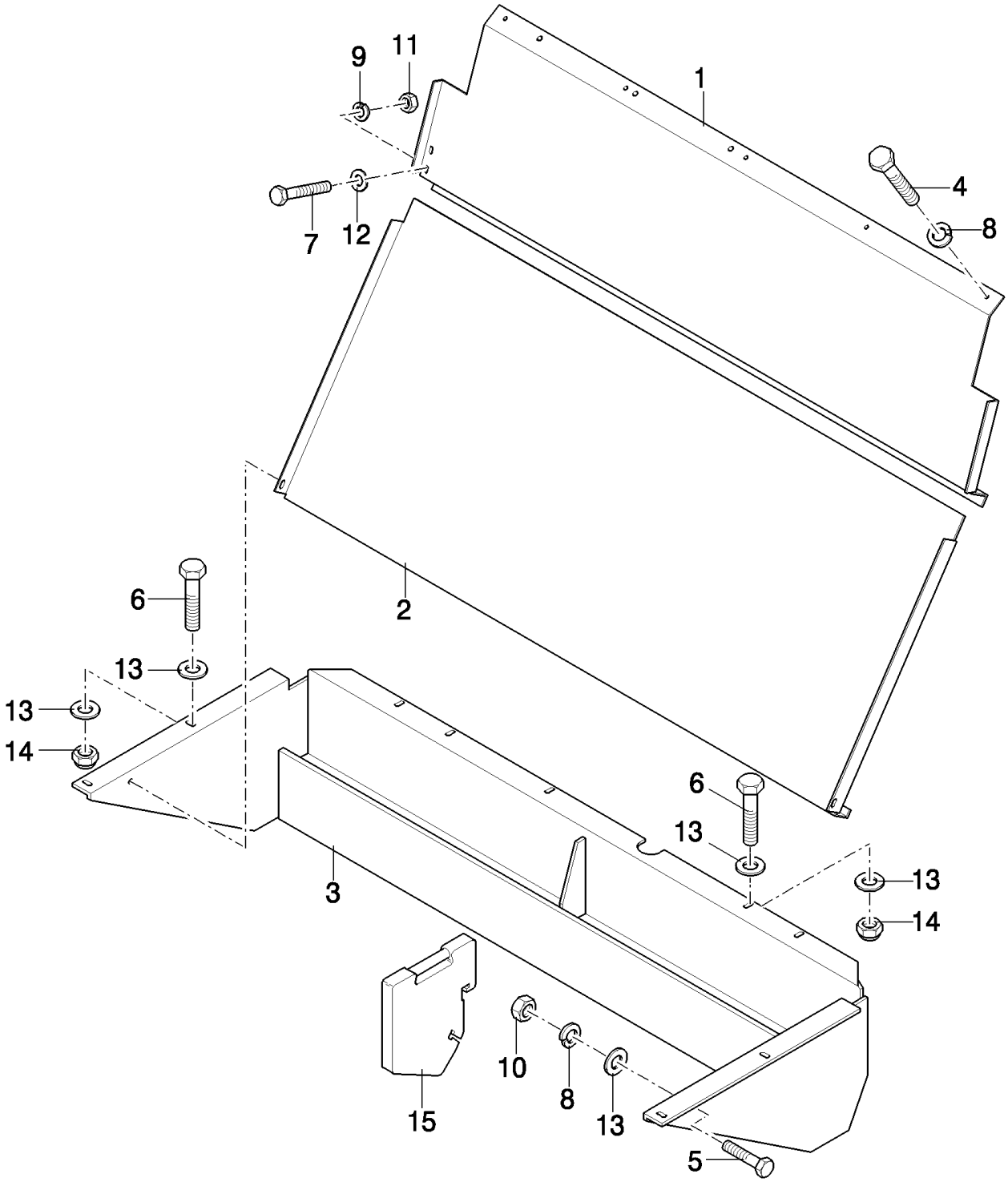

TX68 COMBINE - BASE UNIT

10.18(01) COUNTERWEIGHTS, SUPPORT, MACHINES WITHOUT STRAW CHOPPER

ссылка	Номер детали	Кол-во	Описание
1	84037460	1	PLATE, COVER, , FOR TX62-63-64-65 ONLY
1	84038096	1	PLATE, COVER, , FOR TX66-67-68 ONLY
2	84037944	1	PLATE, COVER, , FOR TX62-63-64-65 ONLY
2	84038098	1	PLATE, COVER, , FOR TX66-67-68 ONLY
3	84036967	1	SUPPORT, , FOR TX62-63-64-65 ONLY
3	84038100	1	SUPPORT, , FOR TX66-67-68 ONLY
5	43127	2	BOLT, Hex, M8 x 25, 8.8,
6	300381	9	BOLT, Hex, M8 x 35, 8.8, M8x35
7	80120099	4	BOLT, Hex, M6 x 16, 8.8,
8	322358	7	WASHER, SPRING, Belleville, M8,
9	322357	4	WASHER, SPRING, Belleville, M6,
10	9706690	2	NUT, M8, Cl 8,
11	15896221	4	NUT, M6, Cl 10,
12	140040	4	WASHER, M6 x 22 x 2,
13	140041	20	WASHER, M8 x 28 x 3,
14	86629542	9	NUT, LOCK, M8 x 1.25, Cl 8,
15	85003249	10	WEIGHT, ADVANCE DEVICE,
4	16043224	5	BOLT, Hex, M8 x 16, 8.8, Full Thd,

10.19(01) STRAW HOOD, CANVAS

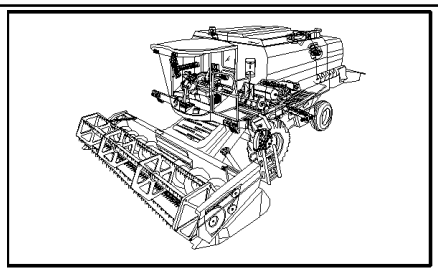

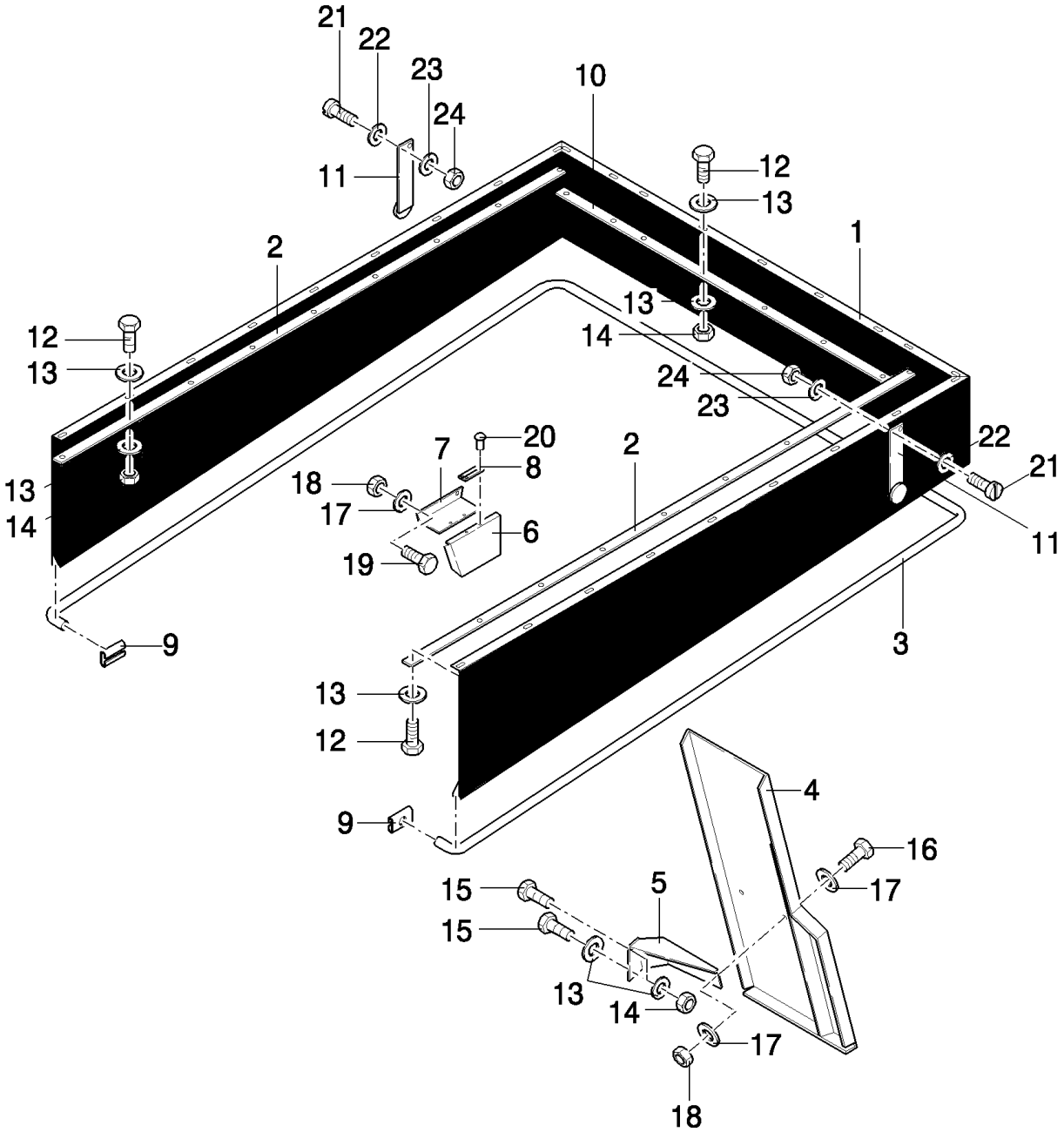

TX68 COMBINE - BASE UNIT

10.19(01) STRAW HOOD, CANVAS

ссылка	Номер детали	Кол-во	Описание
1	9819852	1	CANVAS, , FOR TX66-67-68 ONLY
1	89819853	1	CANVAS, , FOR TX62-63-64-65 ONLY
2	9819854	2	PLATE, FIXING,
3	9502203	1	ROD, , FOR TX66-67-68 ONLY
3	916749	1	ROD, , FOR TX62-63-64-65 ONLY
4	84001587	1	PLATE, , -C7520
4	84035397	1	PLATE, , D7520-
5	9812382	1	SUPPORT, , -C5510
5	84002647	1	SUPPORT, , D5510-
6	84004179	1	SUPPORT, , -C5510
6	84023026	1	PLATE, , D5510-
7	9833916	1	SUPPORT,
8	350083	1	HINGE,
9	432067	2	CIRCLIP,
10	9819855	1	PLATE, FIXING, , FOR TX66-67-68 ONLY
10	89819856	1	PLATE, FIXING, , FOR TX62-63-64-65 ONLY
11	920878	2	REFLECTOR, LAMP, , -C7520
11	84042415	2	REFLECTOR, LAMP, , D7520-
12	120104	AR	SCREW, Hex, M8 x 20, 8.8,
13	412650	AR	WASHER, Belleville, M8,
14	9706690	AR	NUT, M8, Cl 8,
15	43127	2	BOLT, Hex, M8 x 25, 8.8,
16	120100	2	BOLT, Hex, M6 x 20, 8.8,
17	412649	6	WASHER, SPRING, Belleville, M6,
18	15896221	4	NUT, M6, Cl 10,
19	80120099	2	BOLT, Hex, M6 x 16, 8.8,
20	425520	4	RIVET,
21	9835115	4	SCREW, M5x20
22	140182	4	WASHER, M5 x 18 x 2,
23	322356	4	WASHER, 5MM
24	86508813	4	NUT, M5, Cl 8,

10.20(01) CHOCK AND DRUM WRENCH

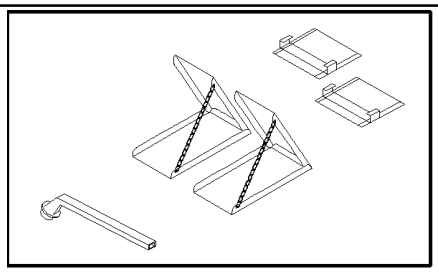

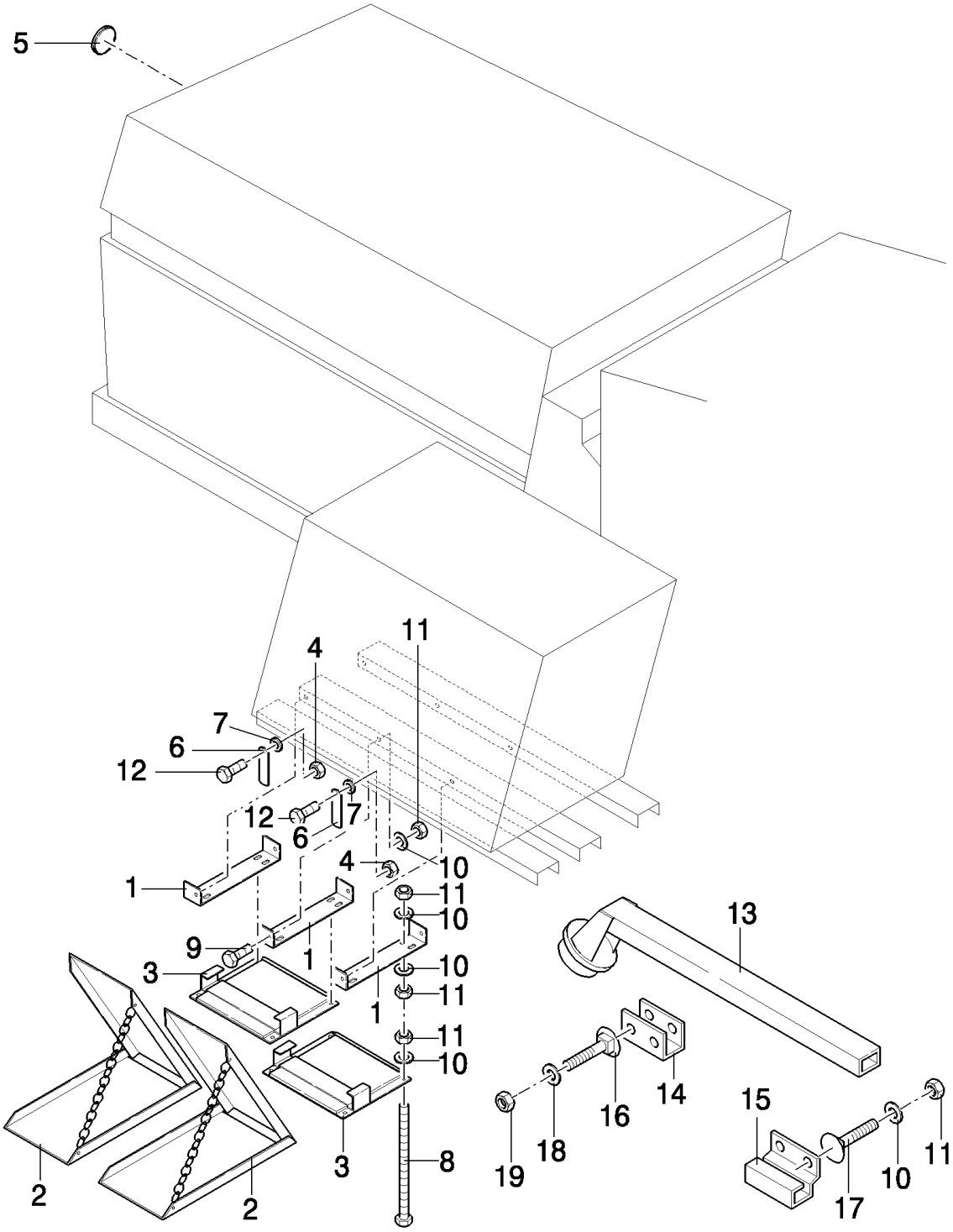

TX68 COMBINE - BASE UNIT

10.20(01) CHOCK AND DRUM WRENCH

ссылка	Номер детали	Кол-во	Описание
1	84011255	3	SUPPORT,
2	452769	2	WHEEL CHOCK,
3	452770	2	CLAMP,
4	353308	2	NUT, M6 x 1, Cl 8,
5	437024	1	REFLECTOR, RED
6	84014209	2	BRACKET,
7	358817	2	WASHER,
8	395851	8	BOLT, Hex, M8 x 90, 8.8, Full Thd, M8x90
9	120104	4	SCREW, Hex, M8 x 20, 8.8,
10	322358	32	WASHER, SPRING, Belleville, M8,
11	9706690	32	NUT, M8, Cl 8,
12	80120099	2	BOLT, Hex, M6 x 16, 8.8,
13	9817864	1	KEY, LOCK,
14	84000342	1	LOCK,
15	84000344	1	SUPPORT,
16	120044	1	BOLT, CARRIAGE, Short NK, M12 x 30, Cl8.8, Full Thd,
17	86507486	4	BOLT, CARRIAGE, Short NK, M8 x 20, Cl8.8, Full Thd,
18	140046	1	WASHER, Belleville, M12,
19	337475	1	NUT, M12, Cl 10,

10.21(01) HAZARD WARNING PLATES, ITALY

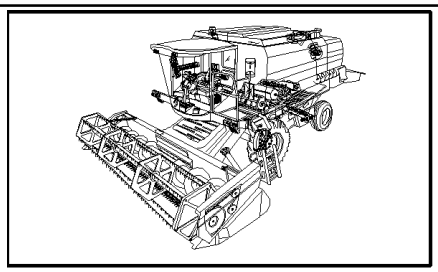

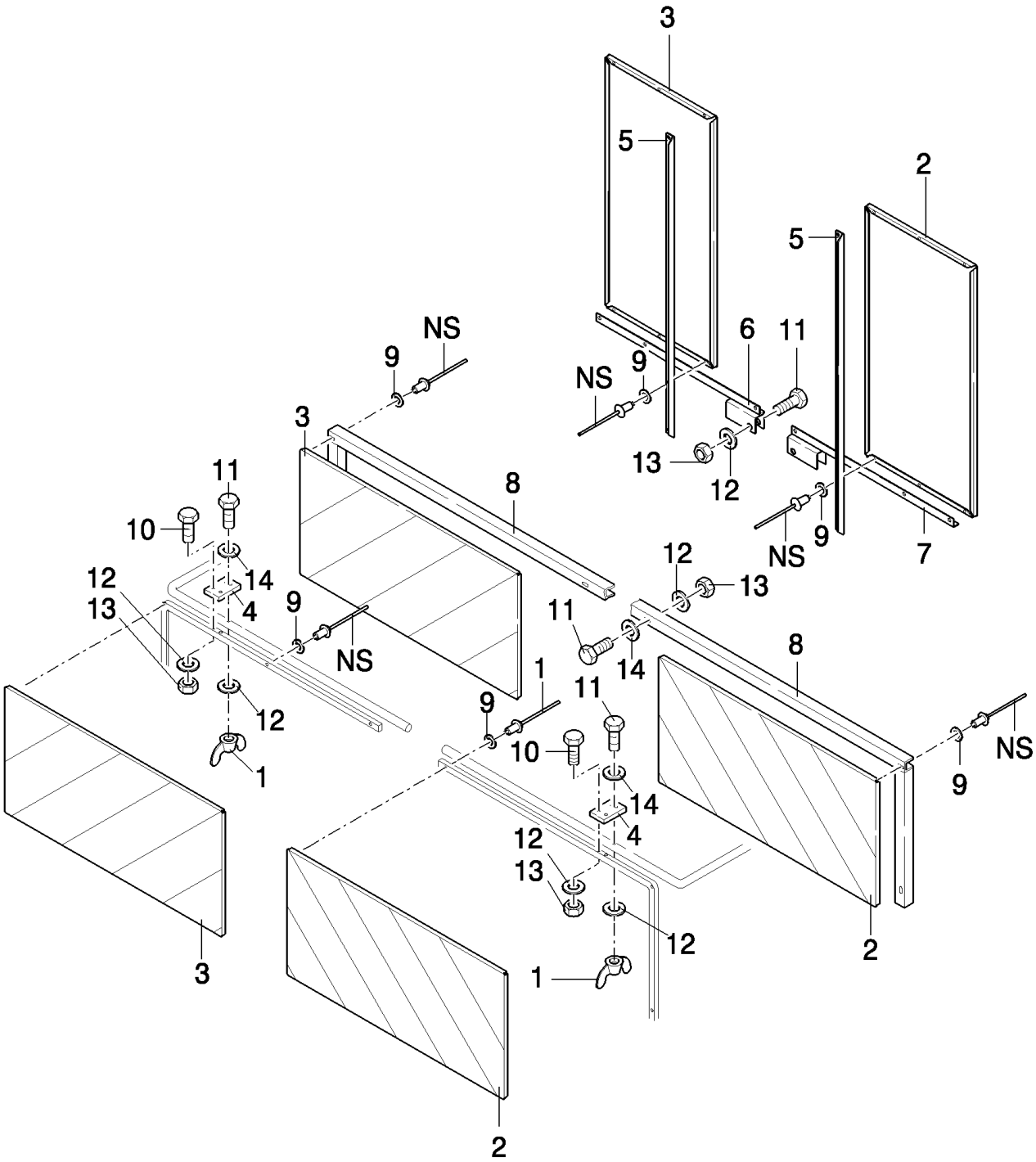

TX68 COMBINE - BASE UNIT

10.21(01) HAZARD WARNING PLATES, ITALY

ссылка	Номер детали	Кол-во	Описание
1	84814892	2	NUT, WING, M6 x 1,
2	84014756	2	PLATE,
3	84014755	2	PLATE,
4	9501041	2	SUPPORT,
5	9501042	2	SUPPORT, , FOR TX62-64-65-66-68 ONLY
5	84042221	2	SUPPORT, , FOR TX67 ONLY
6	9501038	1	GASKET,
7	9501039	1	SUPPORT,
8	9502877	1	SUPPORT,
9	140013	6	WASHER, M4,
10	80120099	4	BOLT, Hex, M6 x 16, 8.8,
11	120102	4	SCREW, Hex, M6 x 40, 8.8, Full Thd,
12	322357	8	WASHER, SPRING, Belleville, M6,
13	15896221	6	NUT, M6, Cl 10,
14	140015	2	WASHER, 6MM

10.22(01) HAZARD WARNING PLATES, ACCESSORIES, AUSTRIA AND GERMANY

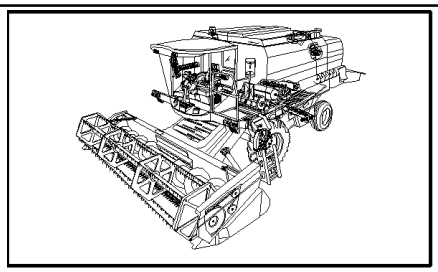

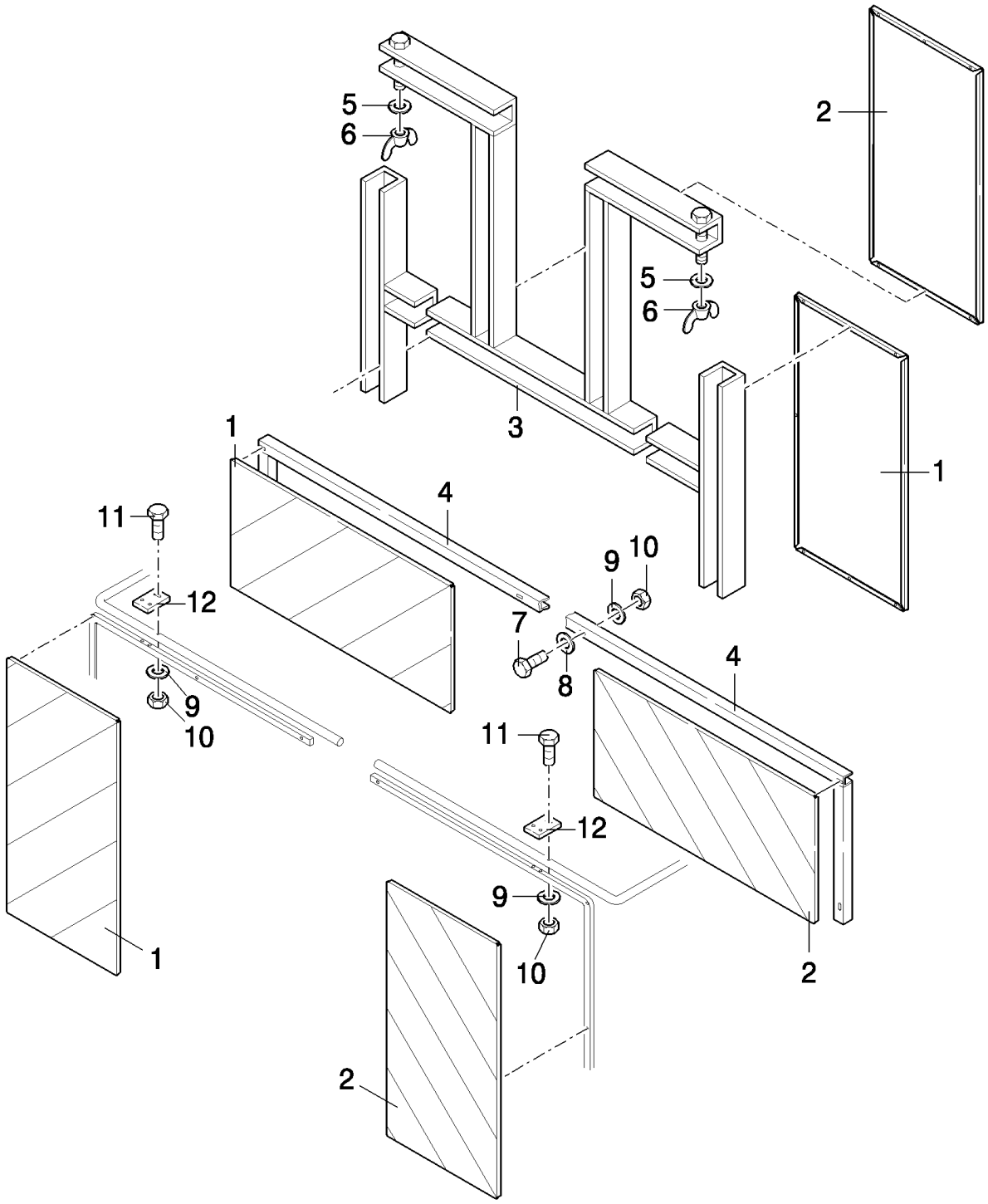

TX68 COMBINE - BASE UNIT

10.22(01) HAZARD WARNING PLATES, ACCESSORIES, AUSTRIA AND GERMANY

ссылка	Номер детали	Кол-во	Описание
1	84014755	2	PLATE,
2	84014756	2	PLATE,
3	84015837	1	SUPPORT, , FOR TX66-68 ONLY, -C1032
3	84017627	1	SUPPORT, , FOR TX62-64-65 ONLY
3	84042172	1	SUPPORT, , FOR TX66-67-68 ONLY, D1030-
4	9502877	1	SUPPORT, , FOR TX66-67-68 ONLY
4	89502879	1	SUPPORT, , FOR TX62-64-65 ONLY
5	140045	2	WASHER, SPRING, Belleville, M10,
6	84814893	2	NUT, WING, M10 x 1.5,
7	120102	2	SCREW, Hex, M6 x 40, 8.8, Full Thd,
8	140015	2	WASHER, 6MM
9	322357	6	WASHER, SPRING, Belleville, M6,
10	15896221	6	NUT, M6, Cl 10,
11	80120099	4	BOLT, Hex, M6 x 16, 8.8,
12	9501041	1	SUPPORT,

10.23(01) HITCH

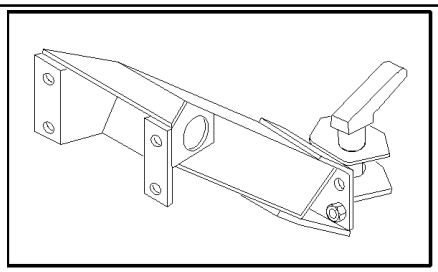

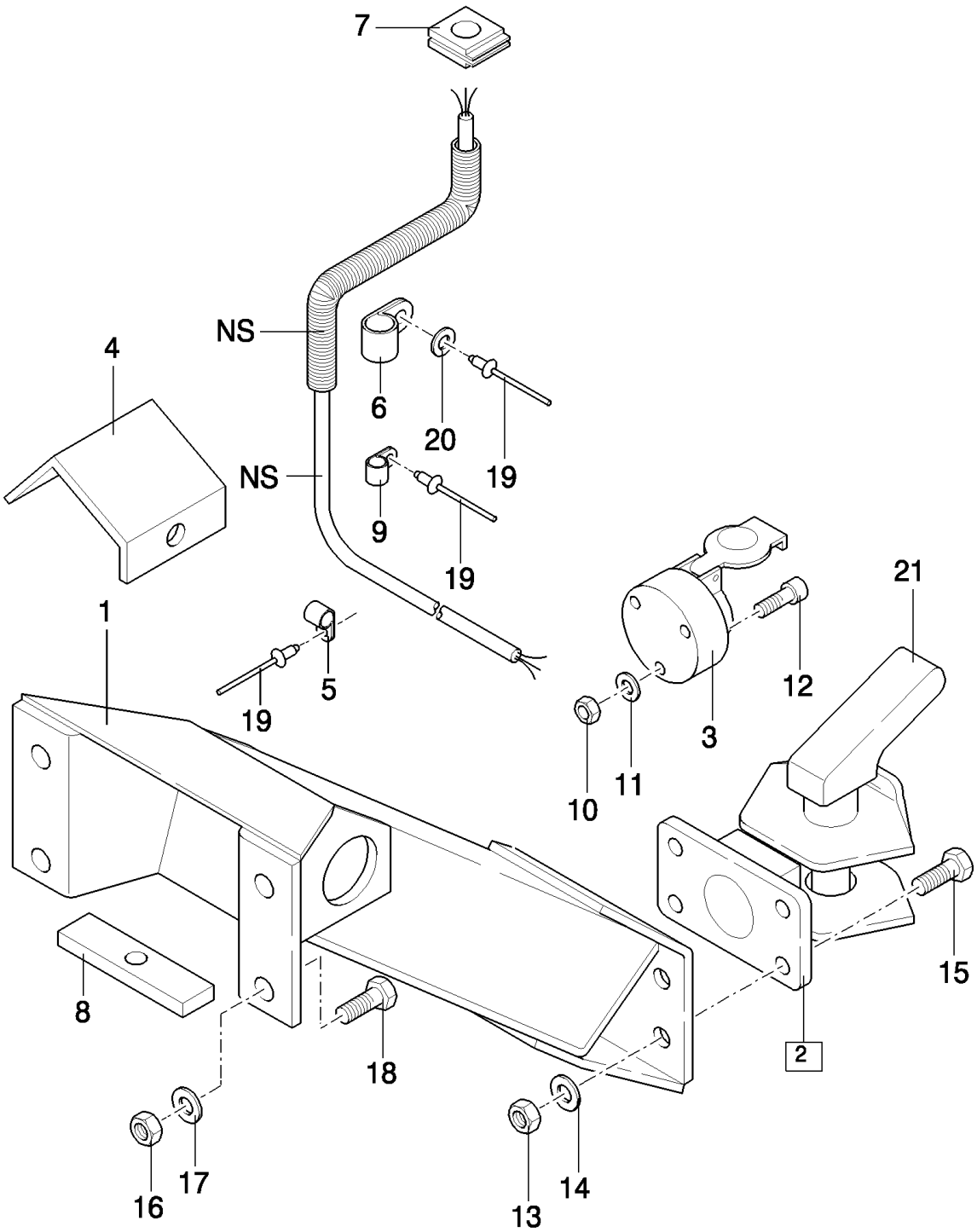

TX68 COMBINE - BASE UNIT

10.23(01) HITCH

ссылка	Номер детали	Кол-во	Описание
1	9513203	1	SUPPORT, , FOR TX66-68 ONLY, -C6405
1	84032618	1	SUPPORT, , FOR TX62-64-65 ONLY, -C6405
1	84002996	1	SUPPORT, , -C0070
1	84431937	1	SUPPORT, 3300kg, D1238-
1	84446037	1	SUPPORT, 5500kg
2	84014753	1	HOOK, (21), -C6405
2	84038913	1	TOW HOOK, (21), -C0070
2	84607012	1	TOW HOOK, (21), D1238-
2	84038076	1	HOOK, (21), FOR ITALY ONLY, -C6405
2	84038071	1	TOW HOOK, (21), FOR ITALY ONLY, -C0070
2	84400985	1	HITCH, , FOR ITALY ONLY, D1238-
3	398224	1	SOCKET, POWER,
4	80436569	1	PLATE, , FOR TX62-64-65 ONLY
5	9507809	6	CLAMP,
6	9503930	1	CLAMP,
7	9508474	1	PLUG,
8	80420492	2	PLATE, , FOR TX62-64-65 ONLY
9	9503928	1	CLAMP,
10	100012	3	NUT, M4, Cl 8,
11	322355	3	WASHER, Belleville, M4,
12	412658	3	SCREW, Cross Pan Hd, M4 x 40, M4x40
13	337475	4	NUT, M12, Cl 10,
14	140046	4	WASHER, Belleville, M12,
15	337563	4	BOLT, Hex, M12 x 40, 10.9, Full Thd,
16	100020	4	NUT, M16, Cl 8,
17	140048	4	WASHER, SPRING, Belleville, M16,
18	9516481	4	BOLT, Hex, M16 x 40, 12.9, Full Thd,
19	9512290	8	RIVET,
20	322356	2	WASHER,
21	89850496	1	PIN, HITCH, D=30, -C6405
21	84320303	1	PIN, HITCH, D=28, D6405-
21	84817652	1	PIN, HITCH, , D1238-
21	84801725	1	PIN, HITCH, , D1238-

SECTIONS	**SECTIONS**	**SECCIONES**	**AFSNIT**
SEZIONI	**ABSCHNITTE**	**SECÇÕES**	**SECTIES**

SEC. 11

11.1 → 11.6
Drive and shields

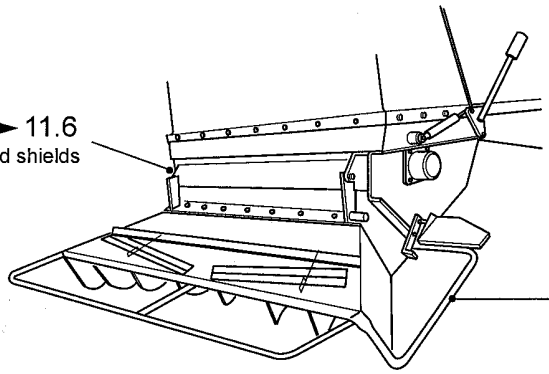

11.21 → 11.29

TX68 Until Serial No. 5109999
TX66 Until Serial No. 5009999

11.41 → 11.55

TX68 From Serial No. 5110001 Until 5125999
TX68 From Serial No. 511035001
TX67 From Serial No. 441035001
TX66 From Serial No. 5010001 Until 5015999
TX66 From Serial No. 501035001
TX65 From Serial No. 6601001
TX64 From Serial No. 4901001
TX63 From Serial No. 461033001
TX62 From Serial No. 4801001

11.61 → 11.69

TX68 From Serial No. 5126001 Until 511034999
TX67 From Serial No. 4404001 Until 441034999
TX66 From Serial No. 5016001 Until 501034999

11.201 → 11.218

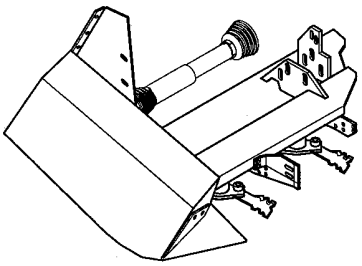

11.101 → 11.108
Until Serial No. _ _ 1032999

11.111 → 11.114
From Serial No. _ _ 1033001

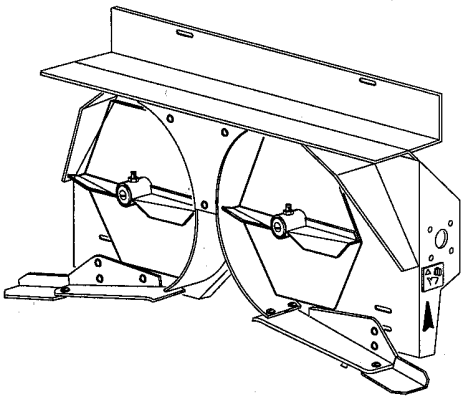

ссылка	Номер детали	Кол-во	Описание

11.001(01) CHOPPER, DRIVE

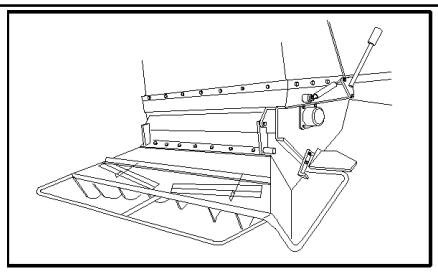

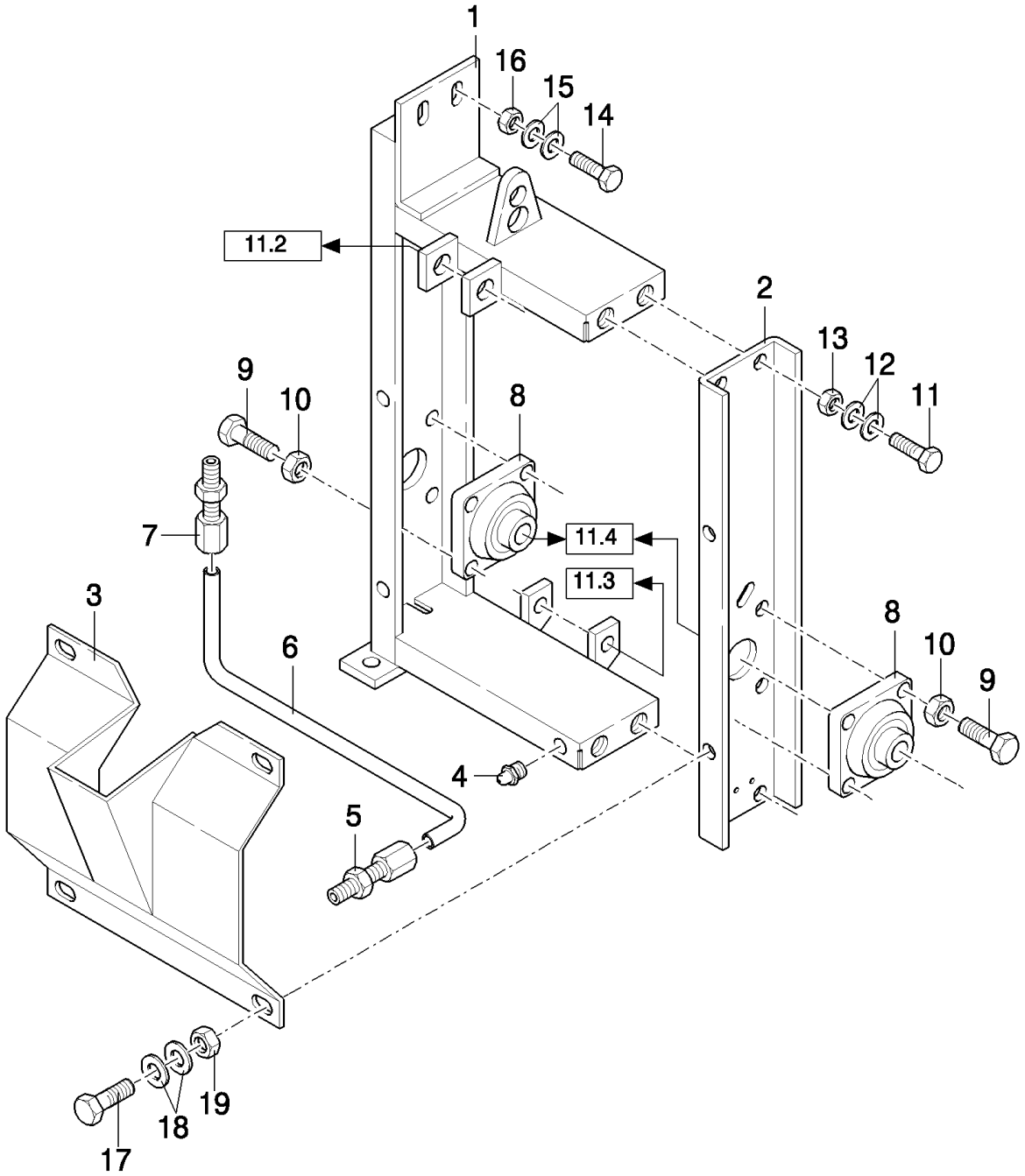

TX68 COMBINE - BASE UNIT

11.001(01) CHOPPER, DRIVE

ссылка	Номер детали	Кол-во	Описание
1	84012262	1	FRAME,
2	84004626	1	PROFILE,
3	84015365	1	SHIELD,
4	84303	1	NIPPLE, LUBE, 1/8"-27 NPT x 1" lg, Fem,
5	11787	1	FITTING, 3/8"-24 Fem x 1/8" NPT,
6	84005507	1	TUBE,
7	159338	1	CONNECTOR, HYD.,
8	84004507	2	BEARING ASSY,
9	80300811	8	SCREW, M14x35
10	412370	8	NUT, LOCK, M14 x 2, Cl 8, M14
11	9706687	4	SCREW, Hex, M12 x 30, 8.8,
12	140046	8	WASHER, Belleville, M12,
13	337475	4	NUT, M12, Cl 10,
14	43140	2	BOLT, Hex, M10 x 30, 8.8, Full Thd,
15	140045	4	WASHER, SPRING, Belleville, M10,
16	100016	2	NUT, M10, Cl 8,
17	120104	4	SCREW, Hex, M8 x 20, 8.8,
18	412650	8	WASHER, Belleville, M8,
19	9706690	4	NUT, M8, Cl 8,
20	452802	1	GROMMET,

11.002(01) CHOPPER, DRIVE

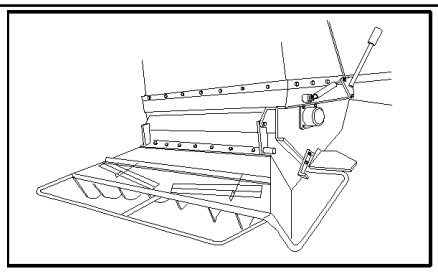

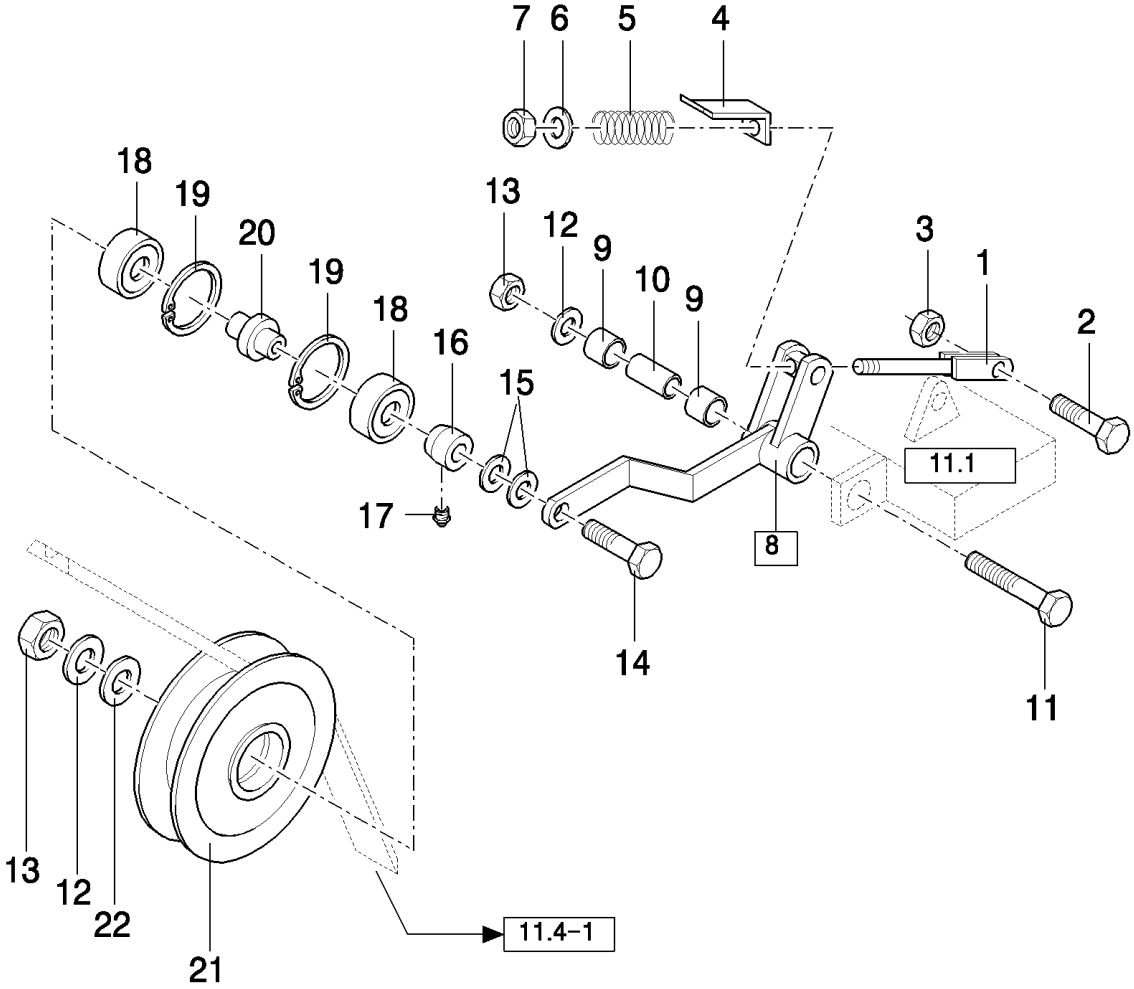

TX68 COMBINE - BASE UNIT

11.002(01) CHOPPER, DRIVE

ссылка	Номер детали	Кол-во	Описание
1	453001	1	ROD, ADJUSTMENT,
2	120112	1	BOLT, Hex, M10 x 40, 8.8, Full Thd,
3	100037	1	NUT, M10 x 1.5, Cl 8,
4	84007422	1	INDICATOR,
5	180091	1	SPRING,
6	378245	1	WASHER, M12,
7	412126	1	NUT, LOCK, M12 x 1.75, Cl 8,
8	84014261	1	LEVER, (9)
9	420434	2	BUSHING,
10	9509577	1	SPACER,
11	321246	1	BOLT, Hex, M16 x 120, 8.8,
12	140048	1	WASHER, SPRING, Belleville, M16,
13	100020	1	NUT, M16, Cl 8,
14	43874	1	SCREW, Hex, M16 x 110, 8.8,
15	378246	AR	WASHER, 16MM
16	84014259	1	BUSHING,
17	321204	1	NIPPLE, LUBE, M6 x 1, 16mm lg,
18	58260	2	BEARING ASSY,
19	300647	2	RING, SNAP, M47, Int,
20	84014260	1	HUB,
21	84007092	1	PULLEY,
22	140093	1	WASHER,

11.003(01) CHOPPER, DRIVE

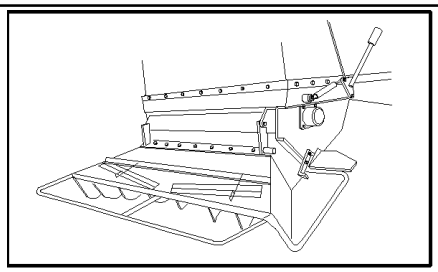

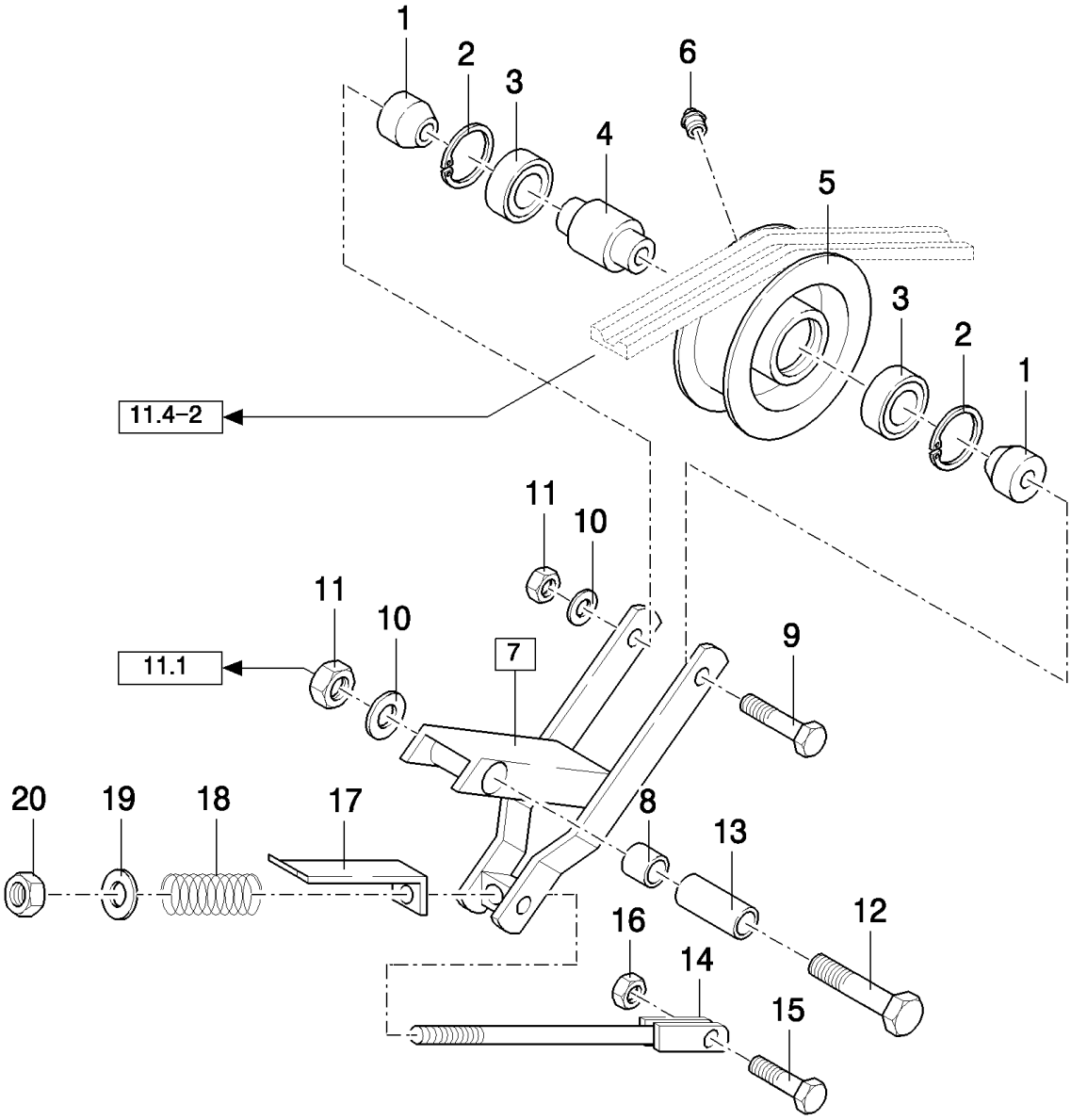

TX68 COMBINE - BASE UNIT

11.003(01) CHOPPER, DRIVE

ссылка	Номер детали	Кол-во	Описание
1	84004688	2	BUSHING,
2	370011	2	RING, SNAP, M52, Int,
3	84057966	1	BEARING, BALL,
4	9819056	1	BUSHING,
5	84004473	1	WHEEL, IDLER,
6	321204	1	NIPPLE, LUBE, M6 x 1, 16mm lg,
7	84004701	1	LEVER, (8)
8	420434	2	BUSHING,
9	334967	1	BOLT, Hex, M16 x 140, 8.8, M16x140
10	140048	2	WASHER, SPRING, Belleville, M16,
11	100020	2	NUT, M16, Cl 8,
12	362573	1	BOLT, Hex, M16 x 150, 8.8,
13	84004694	1	BUSHING,
14	84004693	1	TIE-ROD,
15	120112	1	BOLT, Hex, M10 x 40, 8.8, Full Thd,
16	100037	1	NUT, M10 x 1.5, Cl 8,
17	84004819	1	INDICATOR,
18	918894	1	SPRING,
19	378245	1	WASHER, M12,
20	412126	1	NUT, LOCK, M12 x 1.75, Cl 8,

11.004(01) CHOPPER, DRIVE

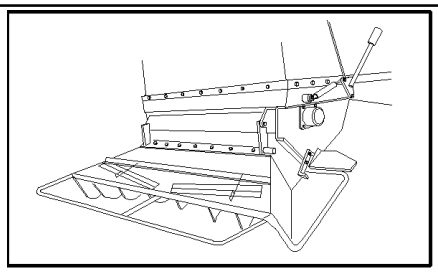

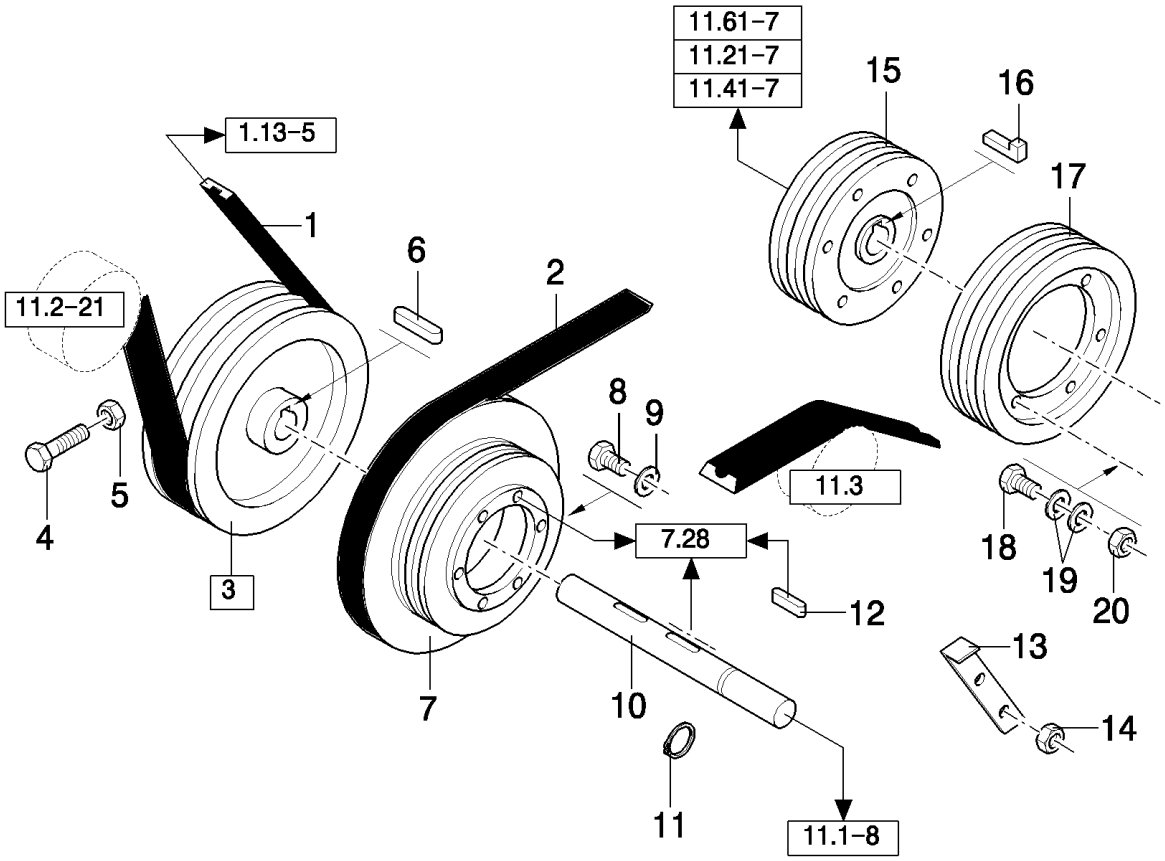

TX68 COMBINE - BASE UNIT

11.004(01) CHOPPER, DRIVE

ссылка	Номер детали	Кол-во	Описание
1	84817633	1	BELT, TRANSMISSION, , FOR TX67-68 ONLY
1	84005417	1	BELT, TRANSMISSION, , FOR TX62-64-65-66 ONLY, -C1032
1	84817633	1	BELT, TRANSMISSION, , FOR TX62-63-64-65-66 ONLY, D1033-
2	84004443	1	BELT, TRANSMISSION, , -C4620
2	84817637	1	BELT, TRANSMISSION, , D4620-
3	84012260	1	PULLEY, (4,5)
4	120071	1	BOLT, Hex, M10 x 65, 8.8,
5	100037	1	NUT, M10 x 1.5, Cl 8,
6	320607	1	KEY, , -C1087
6	84062502	1	KEY, , D1088-
7	84004416	1	PULLEY,
8	43140	6	BOLT, Hex, M10 x 30, 8.8, Full Thd,
9	140045	6	WASHER, SPRING, Belleville, M10,
10	84012259	1	SHAFT, , -C1087
10	84062206	1	SHAFT, , -C0073
10	84817052	1	SHAFT, , D1272-
11	370006	1	RING, SNAP,
12	170058	1	KEY, , -C1087
12	84062502	1	KEY, , -C0073
12	84441872	1	KEY, , D1272-
13	84004723	1	BRACKET,
14	9706690	2	NUT, M8, Cl 8,
15	84004419	1	PULLEY,
16	412241	1	KEY,
17	84004417	1	PULLEY, , LOW RPM ONLY
18	120069	6	SCREW, Hex, M10 x 50, 8.8, , LOW RPM ONLY
19	140045	12	WASHER, SPRING, Belleville, M10, , LOW RPM ONLY
20	100016	6	NUT, M10, Cl 8, , LOW RPM ONLY

11.005(01) SHIELDS

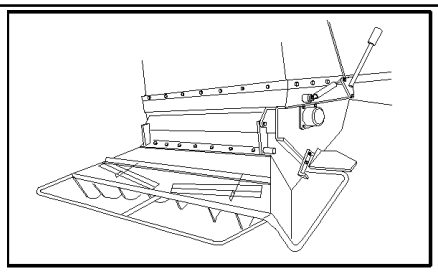

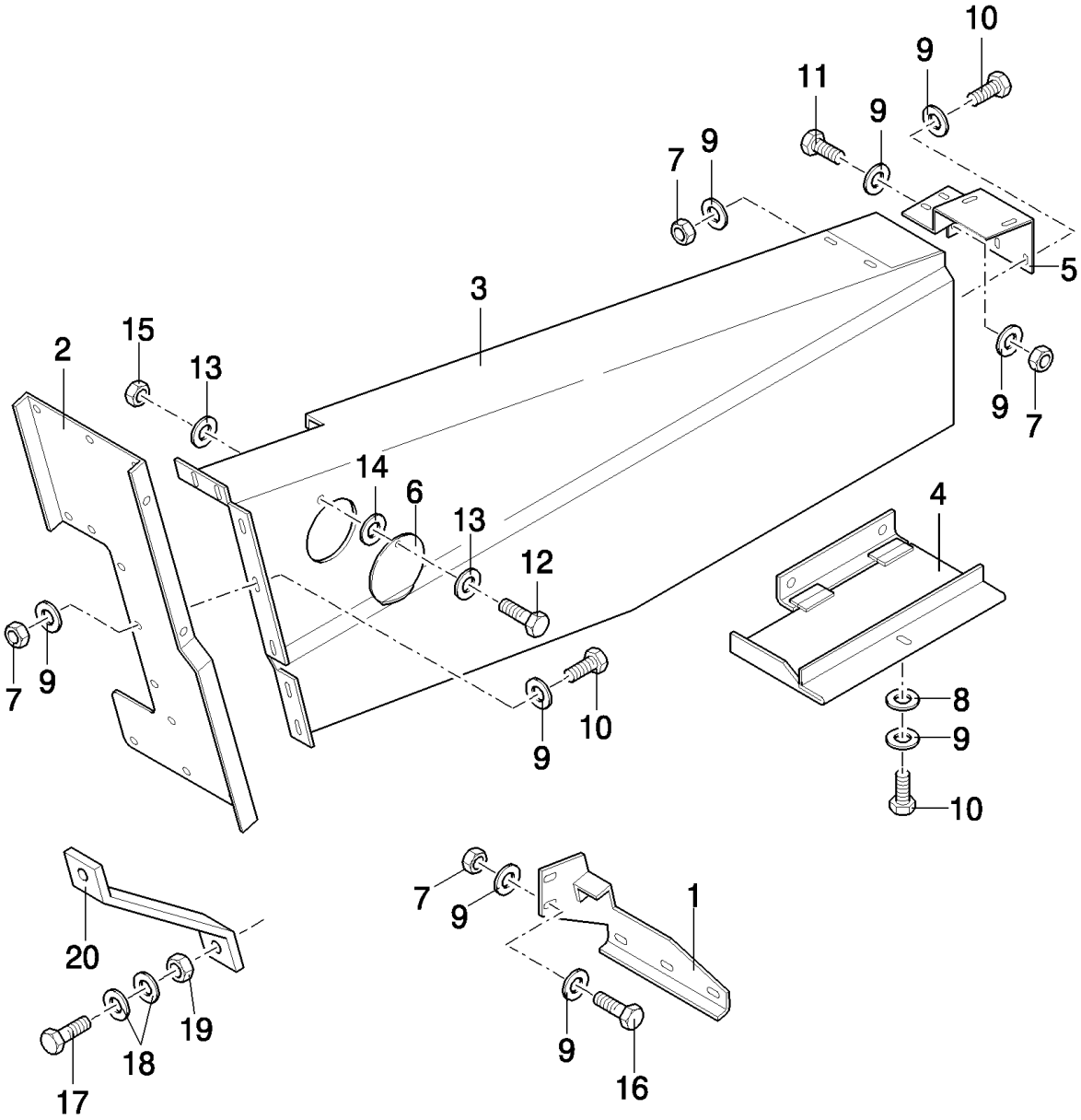

TX68 COMBINE - BASE UNIT

11.005(01) SHIELDS

ссылка	Номер детали	Кол-во	Описание
1	84012261	1	SUPPORT,
2	84015978	1	PLATE, COVER, , -C4620
2	84018059	1	PLATE, COVER, , -C0025
2	84042685	1	PLATE, , -C0058
2	84429315	1	PLATE, , D1170-
3	84012067	1	GUARD, , -C4620
3	84018055	1	SHIELD, , -C0055
3	84429313	1	SHIELD, , D1170-
4	84012065	1	GUARD, , -C4620
4	84021271	1	GUARD, , D4620-
5	84004797	1	SUPPORT, , -C4620
5	84018058	1	SUPPORT, , D4620-
6	9505826	1	COVER, , -C1169
6	84429319	1	COVER, , D1170-
7	9706690	20	NUT, M8, Cl 8,
8	140048	1	WASHER, SPRING, Belleville, M16, 8MM
9	412650	AR	WASHER, Belleville, M8,
10	120140	20	BOLT, M8x20
11	43128	1	BOLT, Hex, M8 x 30, 8.8,
12	80120099	1	BOLT, Hex, M6 x 16, 8.8,
13	140015	2	WASHER, 6MM
14	300366	1	WASHER,
15	353308	1	NUT, M6 x 1, Cl 8,
16	43127	2	BOLT, Hex, M8 x 25, 8.8,
17	43140	1	BOLT, Hex, M10 x 30, 8.8, Full Thd,
18	140045	2	WASHER, SPRING, Belleville, M10,
19	100016	1	NUT, M10, Cl 8,
20	84022592	1	SUPPORT, , D5640-

11.006(01) SHIELDS

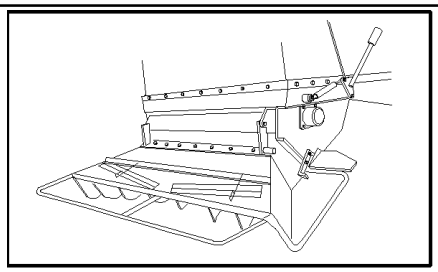

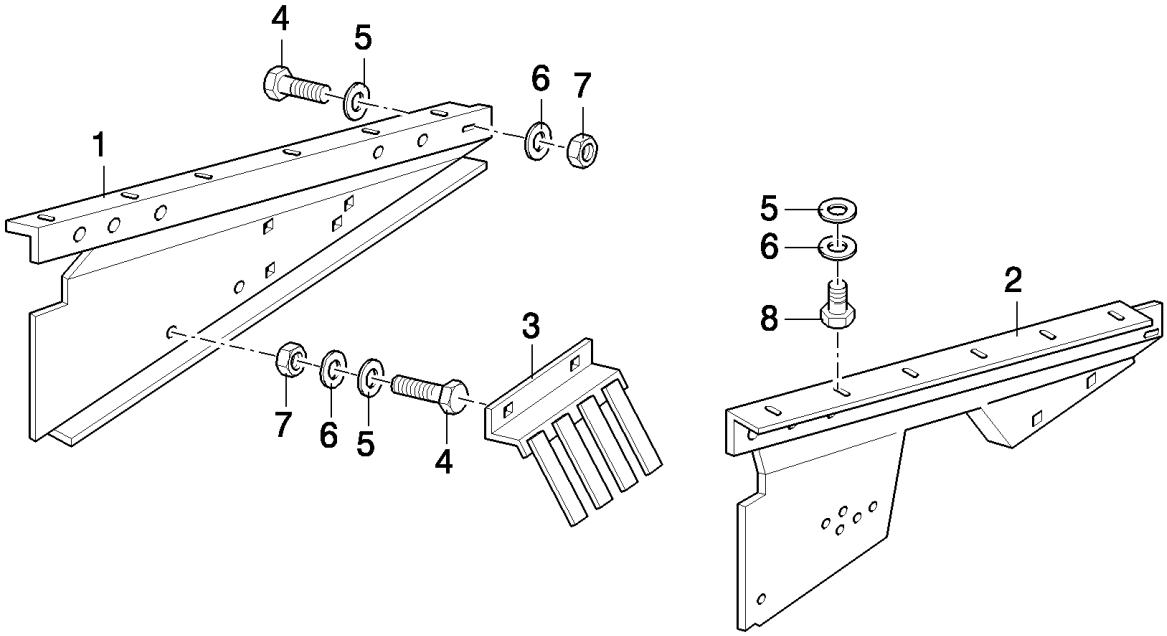

TX68 COMBINE - BASE UNIT

11.006(01) SHIELDS

ссылка	Номер детали	Кол-во	Описание
1	9839016	1	PLATE, COVER, RH, -C4620
1	84017888	1	PLATE, RH, -C0055
1	84429316	1	PLATE, RH, D1170-
2	9839482	1	PLATE, COVER, LH, -C4620
2	84017889	1	PLATE, LH, -C0055
2	84429314	1	PLATE, LH, D1170-
3	84005231	1	RAKE, , -C1032
3	84045915	1	RACK, , -C0051
3	84429318	1	RACK, , D1170-
4	86507486	AR	BOLT, CARRIAGE, Short NK, M8 x 20, Cl8.8, Full Thd,
5	80331173	AR	WASHER, 8MM
6	322358	AR	WASHER, SPRING, Belleville, M8,
7	9706690	AR	NUT, M8, Cl 8,
8	120104	AR	SCREW, Hex, M8 x 20, 8.8,

11.021(01) CHOPPER UNIT - UNTIL --09999

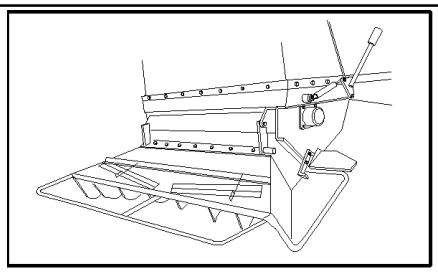

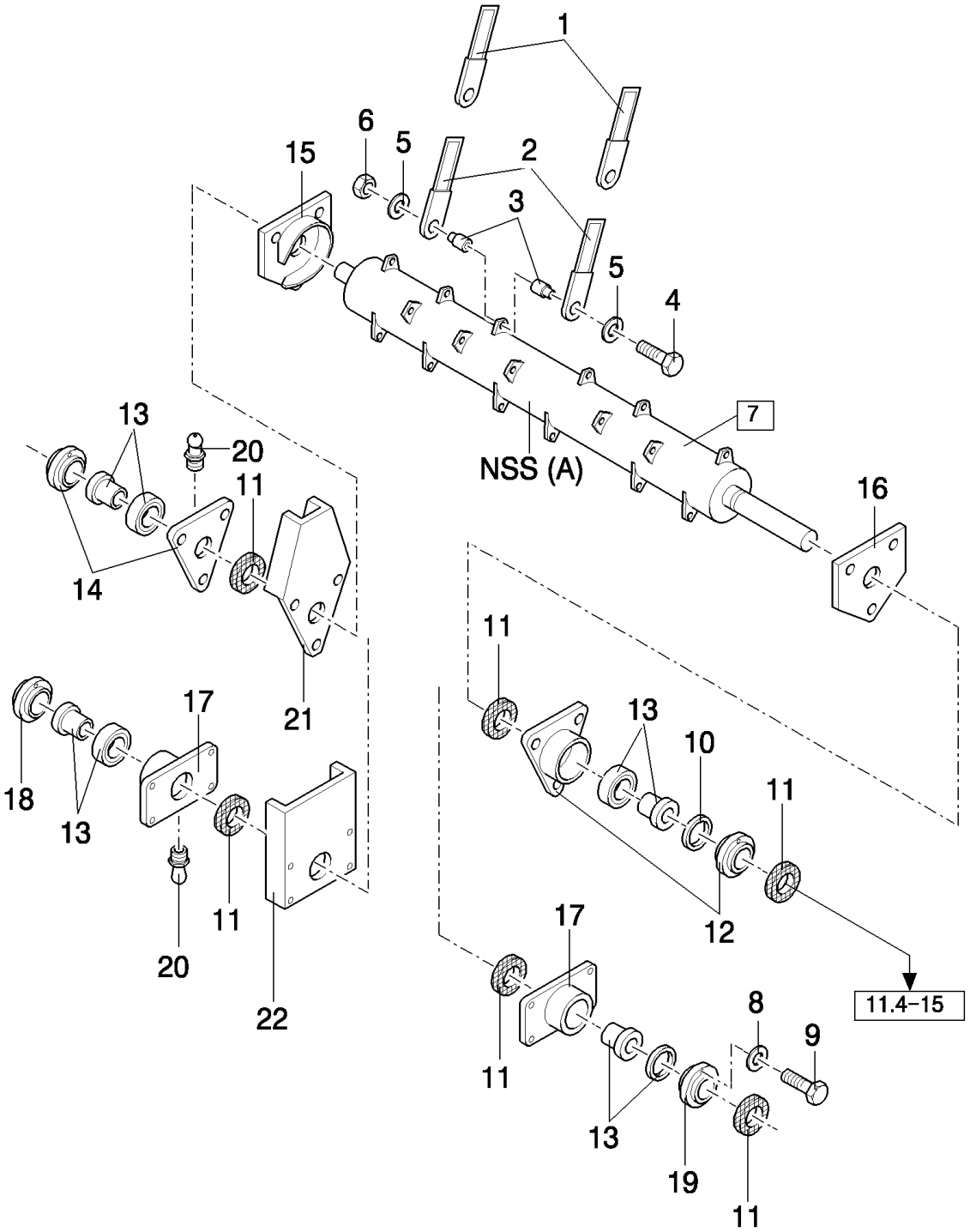

TX68 COMBINE - BASE UNIT

11.021(01) CHOPPER UNIT - UNTIL --09999

ссылка	Номер детали	Кол-во	Описание
1	9833966	68	KNIFE,
2	9815911	68	KNIFE,
3	322268750	68	BUSHING,
4	11343831	34	BOLT, Hex, M10 x 1.25 x 50, 10.9,
5	746811	68	WASHER,
6	12575621	34	NUT, M10
7	322332000	1	ROTOR, (2 to 6,A)
8	322357	6	WASHER, SPRING, Belleville, M6,
9	120100	6	BOLT, Hex, M6 x 20, 8.8,
10	340415665	1	WASHER, LOCK,
11	353587212	3	GASKET,
12	344116146	1	HOUSING, BEARING,
13	340403646	2	BEARING ASSY,
14	340411646	1	HOUSING, BEARING, , "BREGANZE" VERSION
15	322228050	1	GUARD, RH, "BREGANZE" VERSION
15	746815	1	GUARD, RH, "BISO" VERSION
16	322162250	1	GUARD, LH, "BREGANZE" VERSION
16	746814	1	GUARD, LH, "BISO" VERSION
17	746806	2	HOUSING, BEARING, , "BISO" VERSION
18	746808	1	COVER, , "BISO" VERSION
19	746807	1	COVER, , "BISO" VERSION
20	300919	2	NIPPLE, LUBE,
21	322285850	1	PLATE, COVER, , "BREGANZE" VERSION
22	84019839	1	PLATE, COVER, , "BISO" VERSION

TX68 COMBINE - BASE UNIT

11.022(01) SPREAD CASING - UNTIL --09999

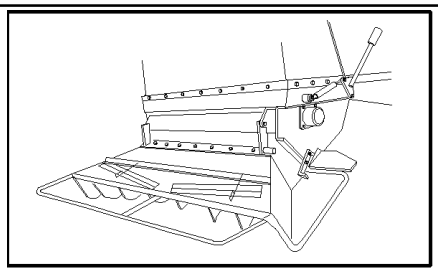

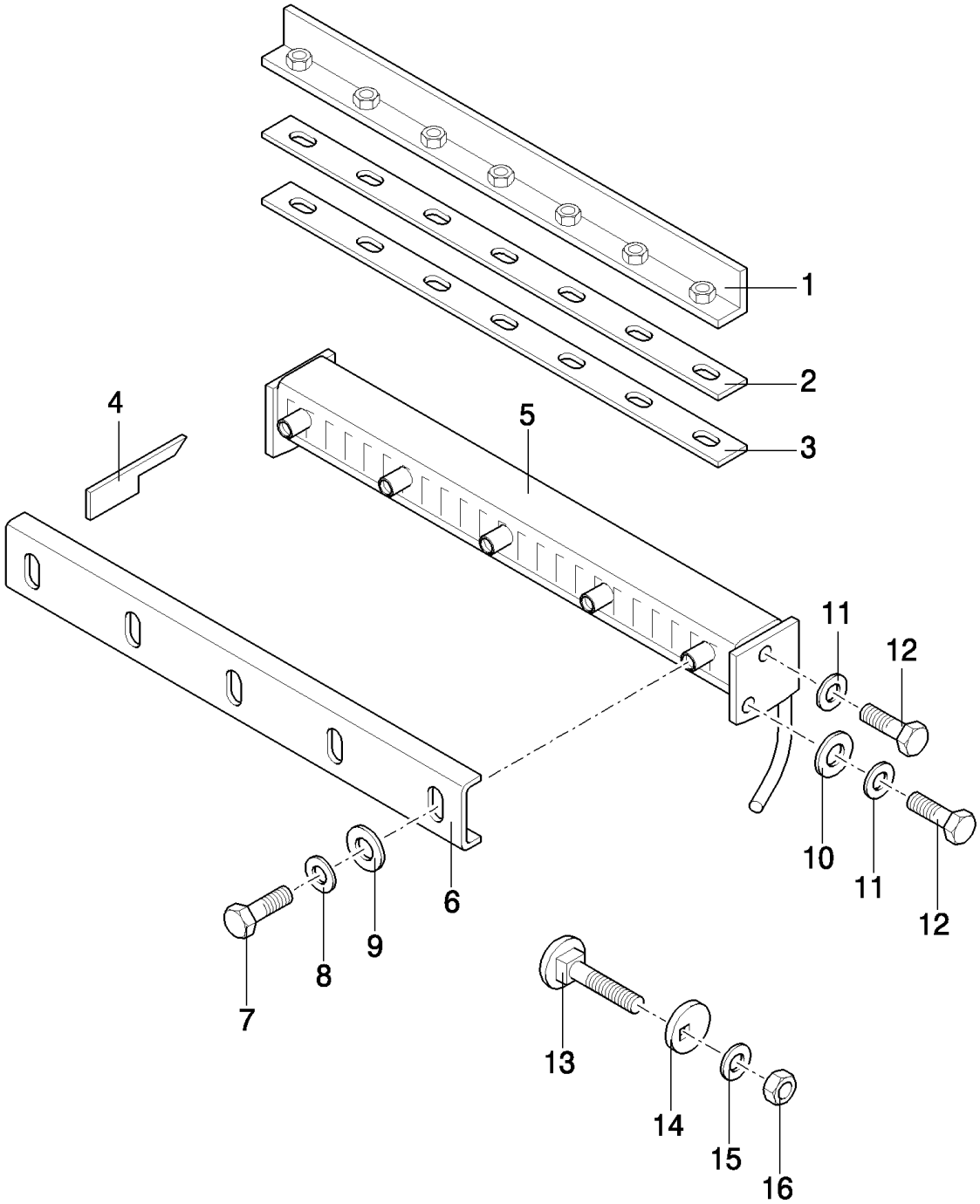

TX68 COMBINE - BASE UNIT

11.022(01) SPREAD CASING - UNTIL --09999

ссылка	Номер детали	Кол-во	Описание
1	322291150	1	PROFILE,
2	322290950	AR	SHIM,
3	322291050	AR	SHIM,
4	322291650	64	KNIFE,
5	322257850	1	SUPPORT,
6	322258250	1	PLATE,
7	120104	9	SCREW, Hex, M8 x 20, 8.8,
8	322358	9	WASHER, SPRING, Belleville, M8,
9	307789	9	WASHER, 8MM
10	51639	2	WASHER, 16MM
11	140048	4	WASHER, SPRING, Belleville, M16,
12	374888	4	BOLT, Hex, M16 x 25, 8.8, Full Thd, Hex, M16 x 25, 8.8, Full Thd
13	412237	1	BOLT, CARRIAGE, Short NK, M10 x 25, Cl8.8, M10x25
14	322286350	1	RING,
15	140045	1	WASHER, SPRING, Belleville, M10,
16	100016	1	NUT, M10, Cl 8,

11.023(01) ROTOR FRAME - UNTIL --09999

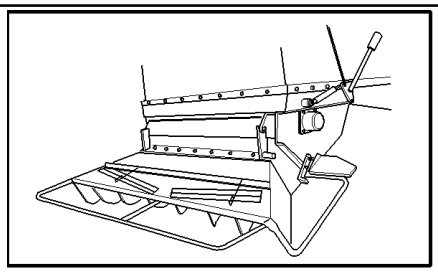

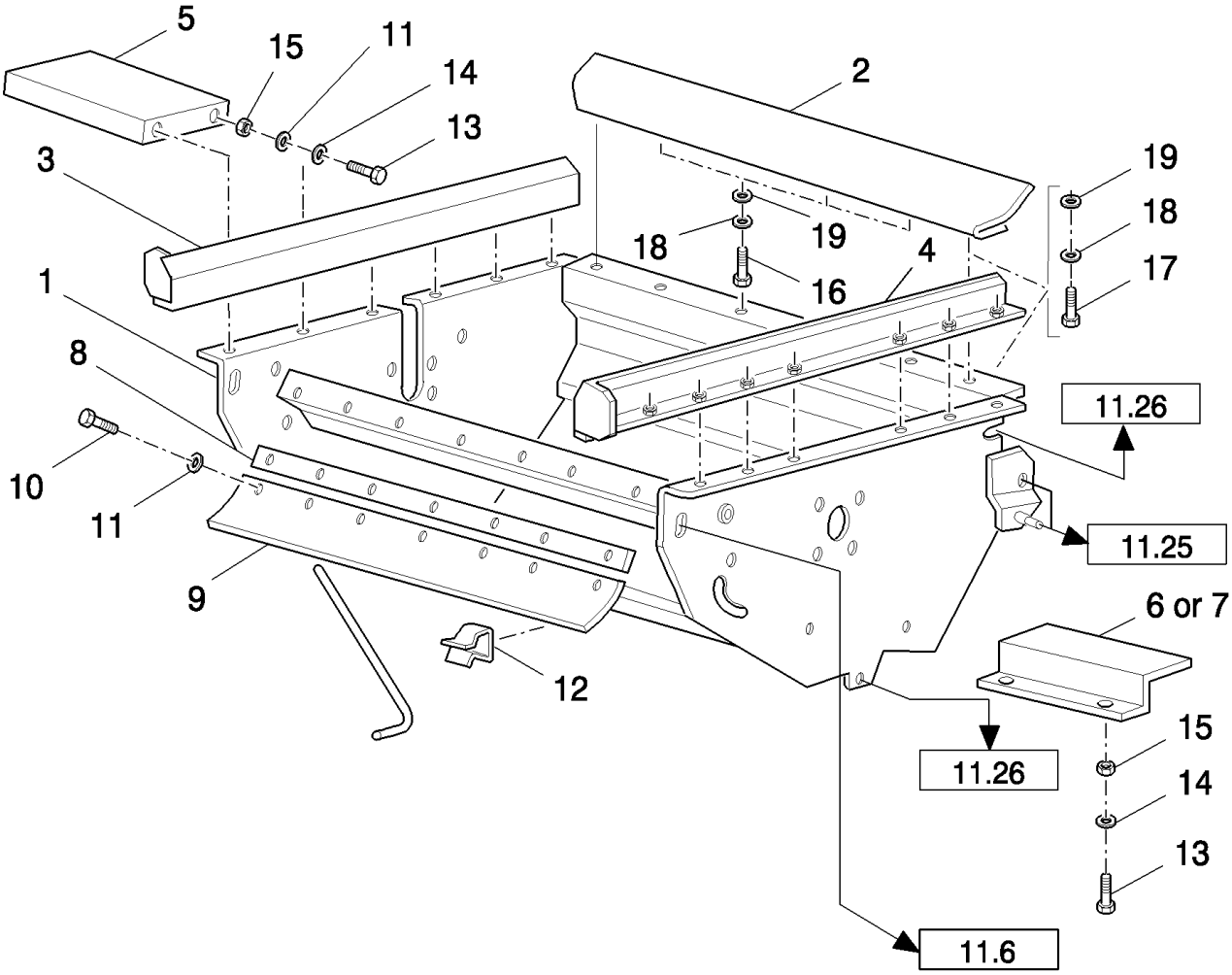

TX68 COMBINE - BASE UNIT

11.023(01) ROTOR FRAME - UNTIL --09999

ссылка	Номер детали	Кол-во	Описание
1	322286950	1	FRAME, , "BREGANZE" VERSION
1	84019838	1	FRAME, , "BISO" VERSION
2	322295250	1	SUPPORT,
3	322295150	1	PROFILE, RH
4	322295050	1	PROFILE, LH
5	322294850	1	SHIELD,
6	322285650	1	PLATE, COVER, RH
7	322285750	1	PLATE, COVER, LH
8	322286050	1	PLATE, FIXING,
9	322286150	1	CANVAS,
10	120100	AR	BOLT, Hex, M6 x 20, 8.8,
11	140044	AR	WASHER, 6MM
12	322294350	1	CLIP,
13	86511829	2	SCREW, Cross Pan Hd, M6 x 16,
14	140040	2	WASHER, M6 x 22 x 2,
15	15896221	2	NUT, M6, Cl 10,
16	43127	AR	BOLT, Hex, M8 x 25, 8.8,
17	120104	AR	SCREW, Hex, M8 x 20, 8.8,
18	322358	AR	WASHER, SPRING, Belleville, M8,
19	80331173	AR	WASHER, 8MM

11.024(01) SPREAD CASING - UNTIL --09999

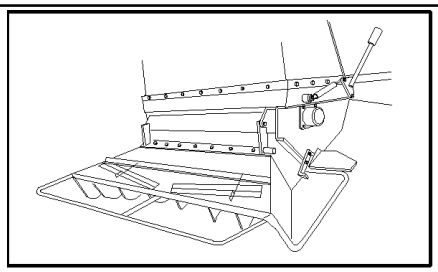

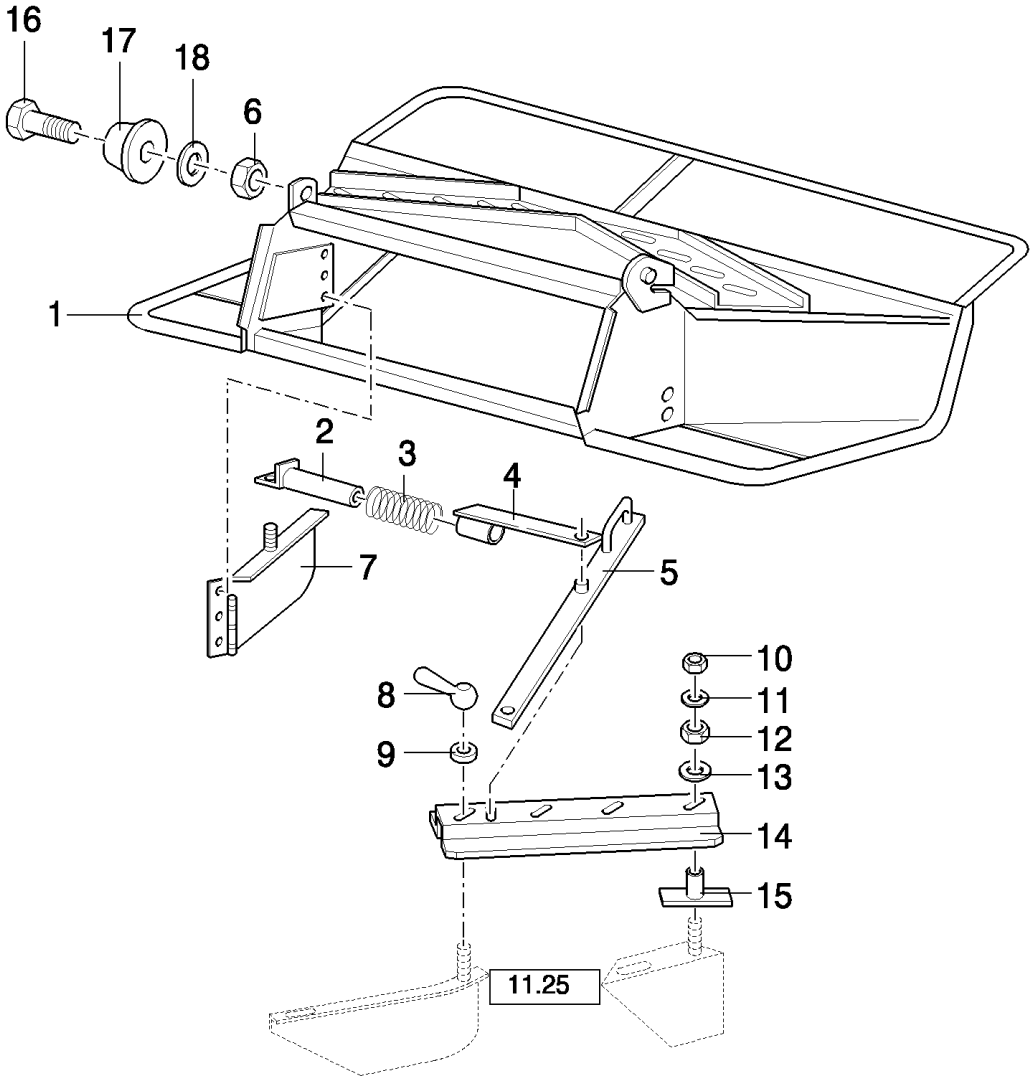

TX68 COMBINE - BASE UNIT

11.024(01) SPREAD CASING - UNTIL --09999

ссылка	Номер детали	Кол-во	Описание
1	322295350	1	FRAME, , "BREGANZE" VERSION
1	84019986	1	ENVELOPE, , "BISO" VERSION
2	322294450	2	ARM,
3	353561166	2	SPRING,
4	322294550	2	ARM,
5	322273850	2	LEVER,
6	100020	2	NUT, M16, Cl 8,
7	322274950	1	DEFLECTOR, RH
7	322274850	1	DEFLECTOR, LH
8	322274350	2	PIN, LOCK,
9	321365050	2	WASHER,
10	86629542	AR	NUT, LOCK, M8 x 1.25, Cl 8,
11	321365050	AR	WASHER,
12	100095	AR	NUT, Thin, M16 x 2, Cl 04,
13	355501730	AR	WASHER, LOCK,
14	322295450	1	SUPPORT, LH
14	322294750	1	SUPPORT, RH
15	322271250	AR	PLATE, ADJUSTING,
16	43168	2	BOLT, Hex, M16 x 40, 8.8,
17	322268450	2	BUSHING,
18	140048	2	WASHER, SPRING, Belleville, M16,

11.025(01) DEFLECTORS - UNTIL --09999

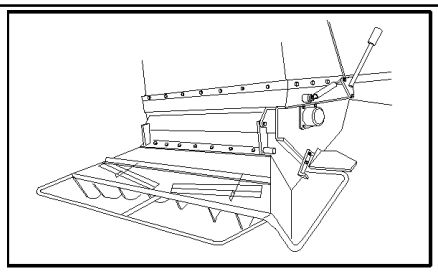

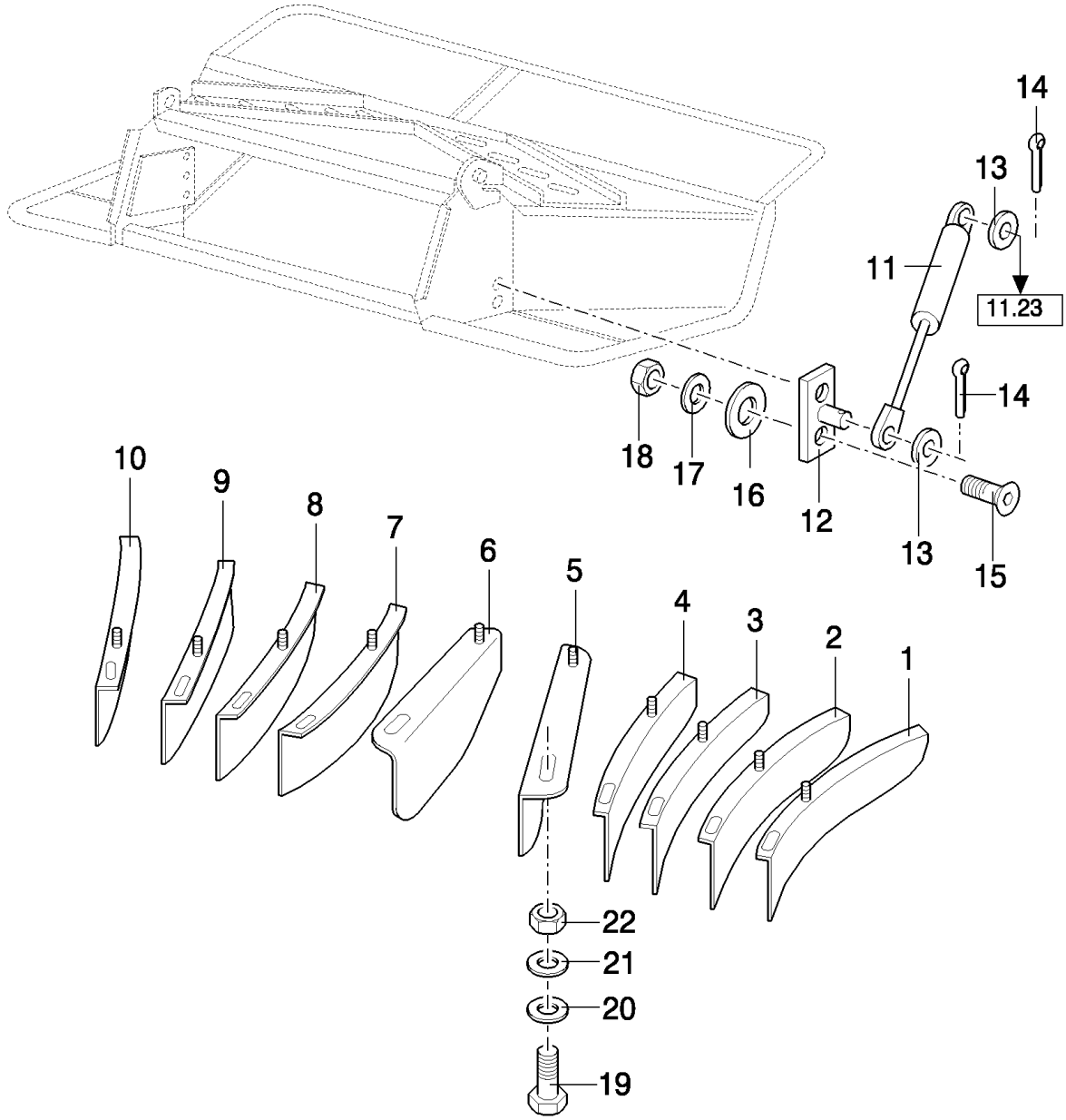

TX68 COMBINE - BASE UNIT

11.025(01) DEFLECTORS - UNTIL --09999

ссылка	Номер детали	Кол-во	Описание
1	322295950	1	DEFLECTOR,
2	322295750	1	DEFLECTOR,
3	322272850	1	DEFLECTOR,
4	322272650	1	DEFLECTOR,
5	322272250	1	DEFLECTOR,
6	322272150	1	DEFLECTOR,
7	322272550	1	DEFLECTOR,
8	322272750	1	DEFLECTOR,
9	322295650	1	DEFLECTOR,
10	322295850	1	DEFLECTOR,
11	322232950	2	CYLINDER,
12	322294650	2	SUPPORT,
13	140076	2	WASHER,
14	9512667	2	PIN, SPLIT (COTTER), M2 x 20,
15	374897	4	SCREW, Hex Flat Hd, M8 x 25, 4.8, M8x25
16	80331173	4	WASHER,
17	322358	4	WASHER, SPRING, Belleville, M8,
18	9706690	4	NUT, M8, Cl 8,
19	120104	10	SCREW, Hex, M8 x 20, 8.8,
20	140015	10	WASHER, 8MM
21	322358	10	WASHER, SPRING, Belleville, M8,
22	86629542	10	NUT, LOCK, M8 x 1.25, Cl 8,

11.026(01) ELECTRICAL ADJUSTABLE DEFLECTOR KIT "BISO" - UNTIL --09999

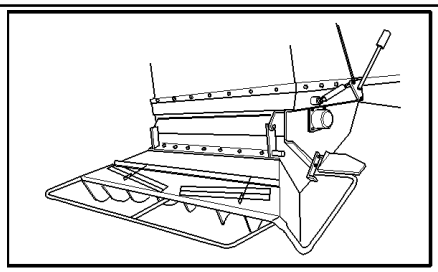

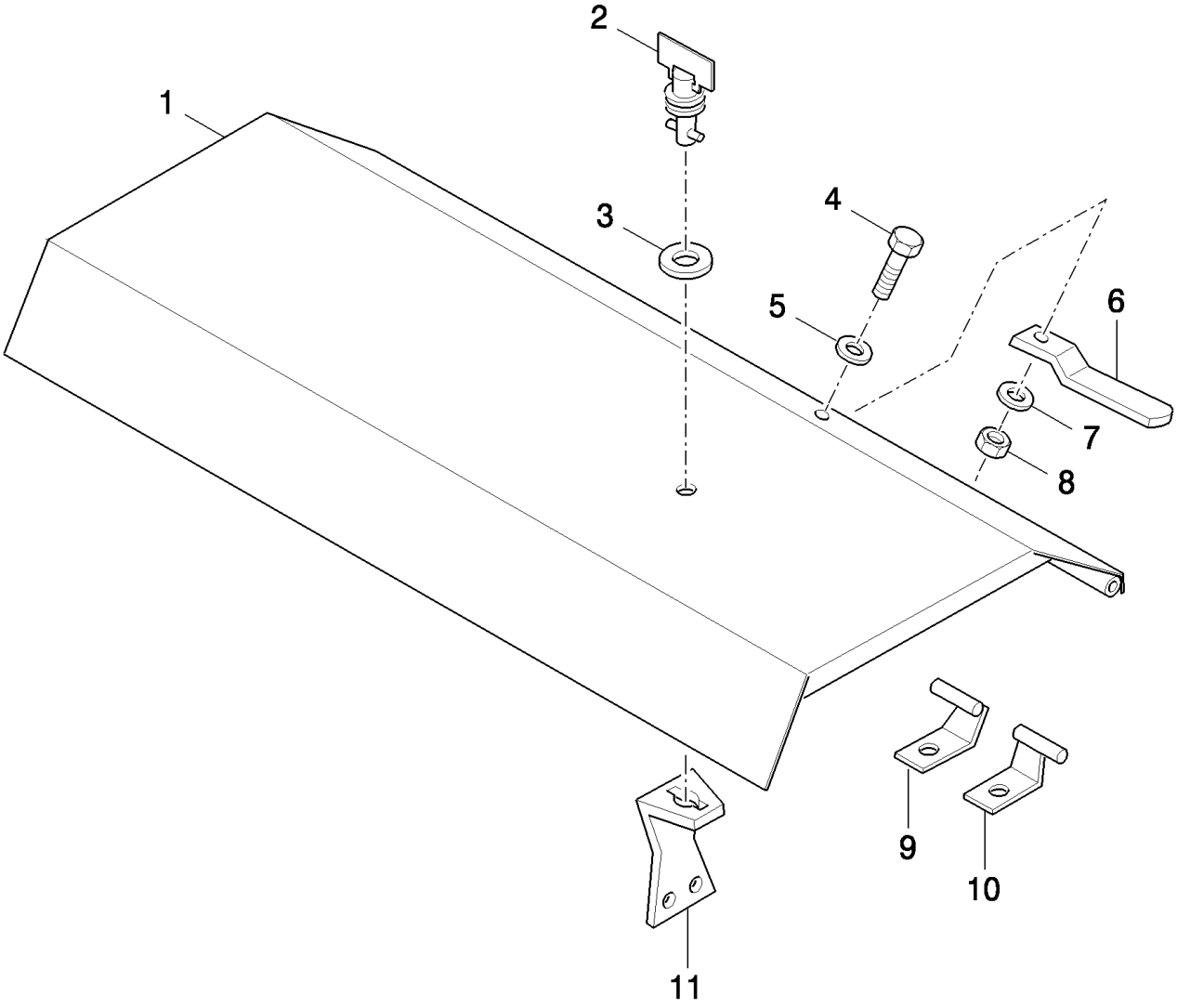

TX68 COMBINE - BASE UNIT

11.026(01) ELECTRICAL ADJUSTABLE DEFLECTOR KIT "BISO" - UNTIL --09999

ссылка	Номер детали	Кол-во	Описание
1	84019987	1	SHIELD,
2	9831581	2	LOCK,
3	9514605	2	WASHER,
4	43127	1	BOLT, Hex, M8 x 25, 8.8,
5	140016	1	WASHER, M8 x 16 x 1.6,
6	84019988	1	LEVER,
7	746849	1	WASHER, LOCK, 8MM
8	86629542	1	NUT, LOCK, M8 x 1.25, Cl 8,
9	84019989	1	HINGE,
10	84019990	1	HINGE,
11	84019991	2	SUPPORT,

11.027(01) ELECTRICAL ADJUSTABLE DEFLECTOR KIT "BISO" - UNTIL --09999

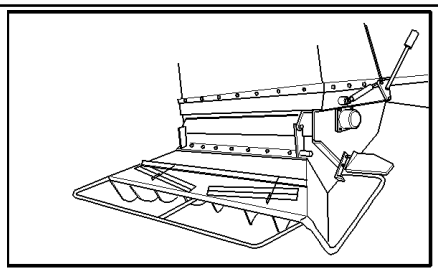

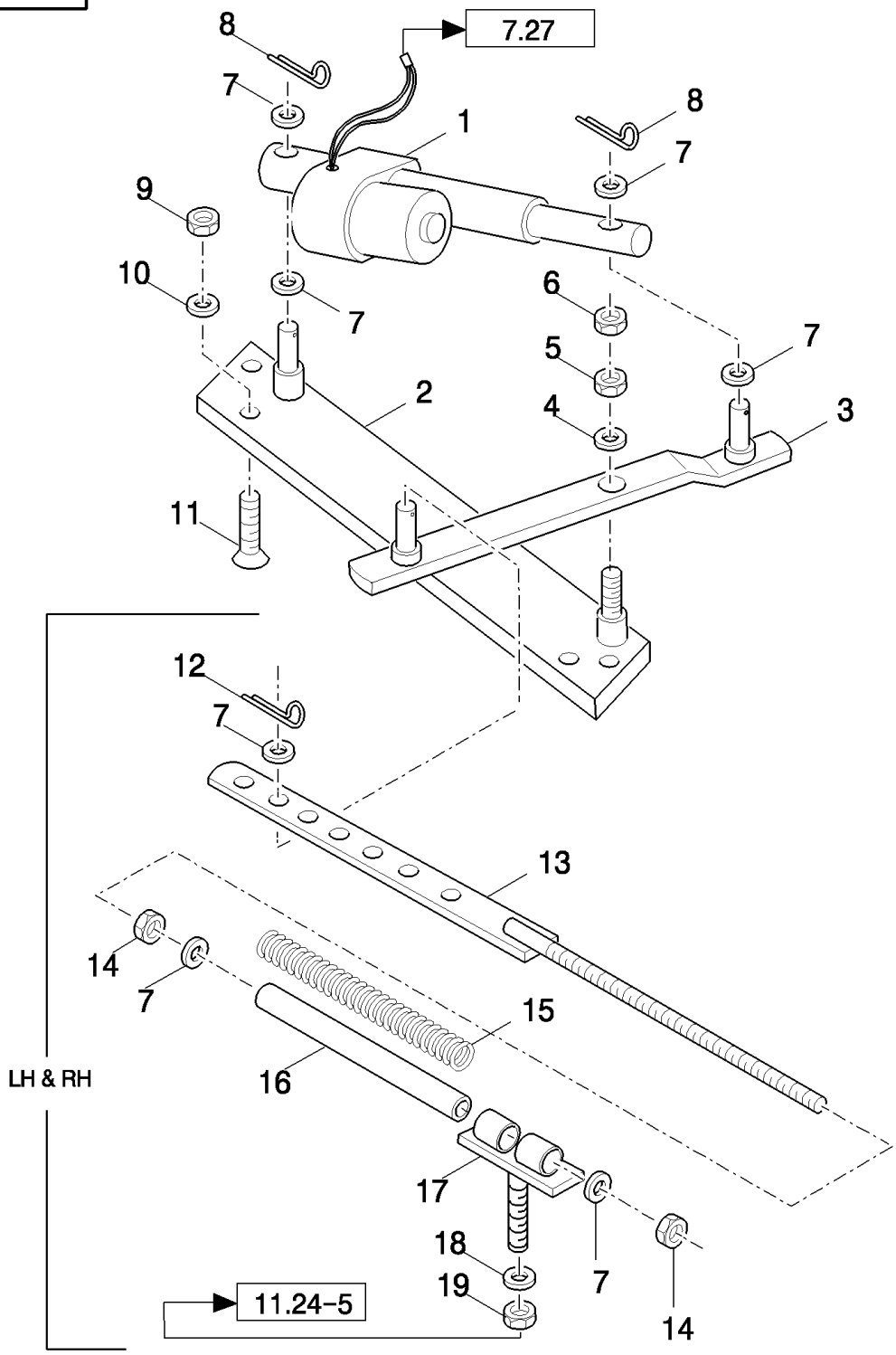

TX68 COMBINE - BASE UNIT

11.027(01) ELECTRICAL ADJUSTABLE DEFLECTOR KIT "BISO" - UNTIL --09999

ссылка	Номер детали	Кол-во	Описание
1	84018921	1	ACTUATOR,
2	84019992	1	SUPPORT,
3	84019993	1	LEVER,
4	437023	1	WASHER,
5	100020	1	NUT, M16, Cl 8,
6	100095	1	NUT, Thin, M16 x 2, Cl 04,
7	378245	7	WASHER, M12, 13MM
8	130007	2	PIN, SPLIT (COTTER), M4 x 25,
9	9706690	4	NUT, M8, Cl 8,
10	322358	4	WASHER, SPRING, Belleville, M8,
11	120203	4	SCREW, Hex Flat Hd, M8 x 20, 4.8,
12	746888	1	PIN, SPLIT (COTTER),
13	84019994	2	ROD,
14	337475	2	NUT, M12, Cl 10,
15	84019995	2	SPRING,
16	84019996	2	TUBE,
17	84019997	2	CLAMP,
18	331162	2	WASHER,
19	100037	2	NUT, M10 x 1.5, Cl 8,

11.028(01) LOCKING DEVICE - UNTIL --09999

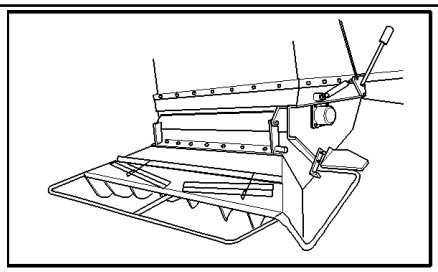

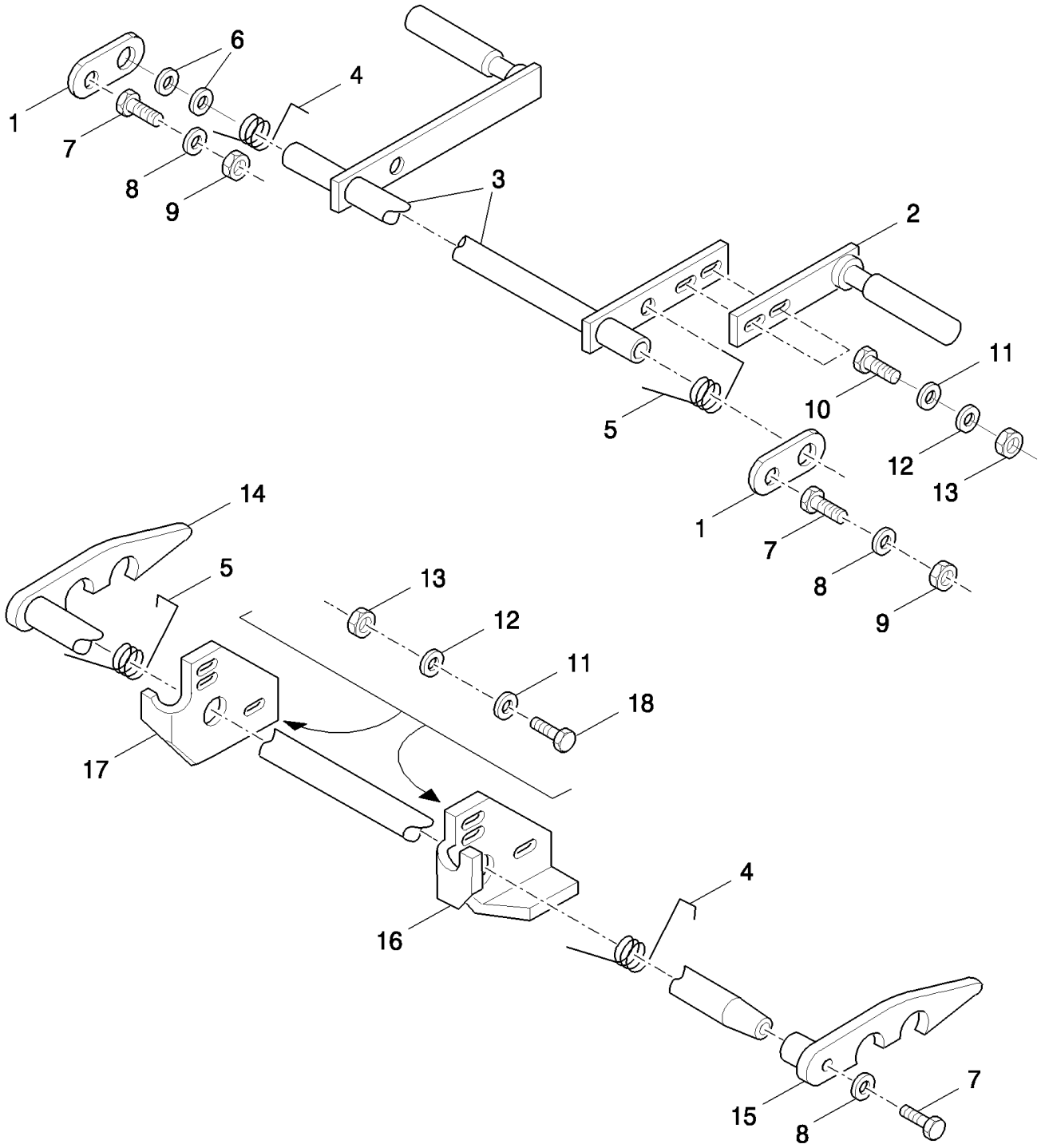

TX68 COMBINE - BASE UNIT

11.028(01) LOCKING DEVICE - UNTIL --09999

ссылка	Номер детали	Кол-во	Описание
1	322290850	2	BRACKET,
2	322289950	1	LEVER,
3	322289850	1	LEVER,
4	350356937	2	SPRING,
5	350356936	2	SPRING,
6	432417	AR	WASHER,
7	11106231	3	BOLT, Hex, M10 x 25, 10.9, Full Thd,
8	140045	3	WASHER, SPRING, Belleville, M10,
9	100016	2	NUT, M10, Cl 8,
10	43465	2	BOLT, CARRIAGE, Short NK, M8 x 30, Cl8.8, Full Thd,
11	378243	6	WASHER, M8,
12	322358	6	WASHER, SPRING, Belleville, M8,
13	9706690	6	NUT, M8, Cl 8,
14	322290750	1	SHAFT,
15	322290650	1	LEVER,
16	322290250	1	SUPPORT,
17	322290150	1	SUPPORT,
18	120104	4	SCREW, Hex, M8 x 20, 8.8,

TX68 COMBINE - BASE UNIT

11.029(01) DEFLECTOR PLATES - UNTIL --09999

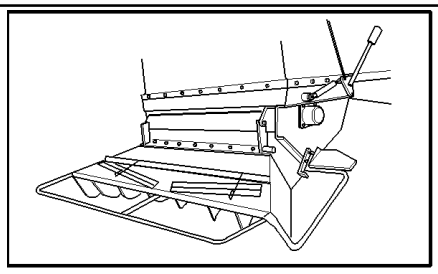

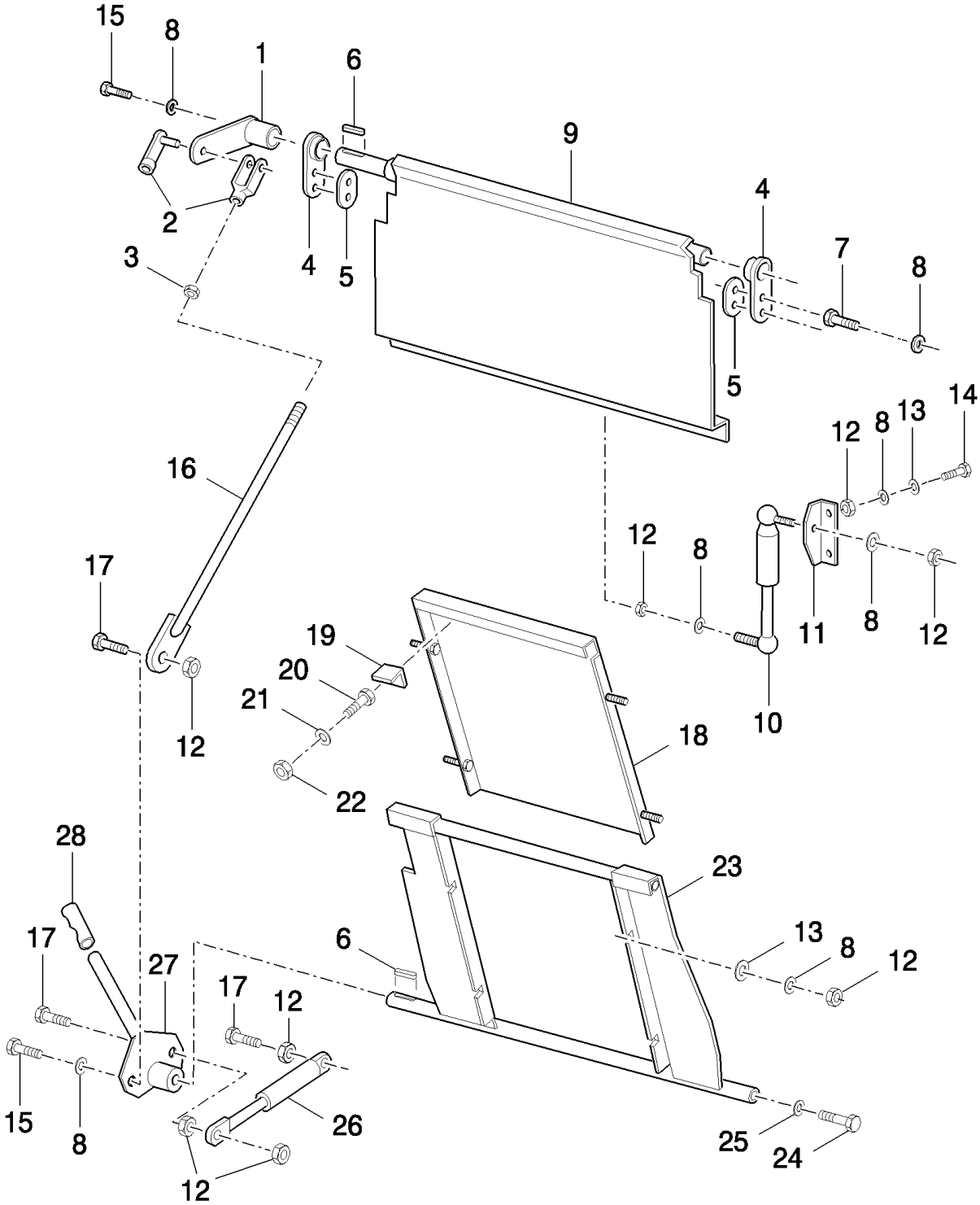

TX68 COMBINE - BASE UNIT

11.029(01) DEFLECTOR PLATES - UNTIL --09999

ссылка	Номер детали	Кол-во	Описание
1	322289750	1	LEVER,
2	412417	1	FORK,
3	100016	1	NUT, M10, Cl 8,
4	322289550	2	LEVER,
5	322289650	2	BRACKET,
6	350382235	2	KEY,
7	43127	4	BOLT, Hex, M8 x 25, 8.8,
8	322358	AR	WASHER, SPRING, Belleville, M8,
9	322286450	1	DEFLECTOR,
10	322286700	1	SHOCK ABSORBER,
11	322286850	1	SUPPORT,
12	9706690	AR	NUT, M8, Cl 8,
13	140016	6	WASHER, M8 x 16 x 1.6,
14	V44317	2	SCREW, M8x16
15	120203	2	SCREW, Hex Flat Hd, M8 x 20, 4.8,
16	322286650	1	ROD,
17	43128	3	BOLT, Hex, M8 x 30, 8.8,
18	322285550	1	DEFLECTOR,
19	322285950	2	BRACKET,
20	86511829	2	SCREW, Cross Pan Hd, M6 x 16,
21	322357	2	WASHER, SPRING, Belleville, M6,
22	15896221	2	NUT, M6, Cl 10,
23	322286550	1	DEFLECTOR,
24	322290550	1	SCREW,
25	140048	1	WASHER, SPRING, Belleville, M16,
26	320792350	1	SHOCK ABSORBER,
27	322290050	1	HANDLE,
28	322302950	1	HANDLE,

11.041(01) ROTOR

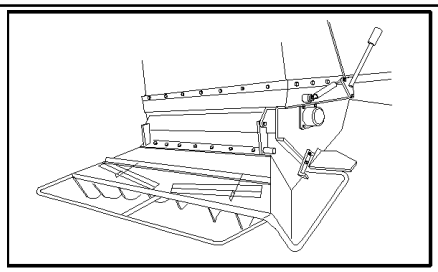

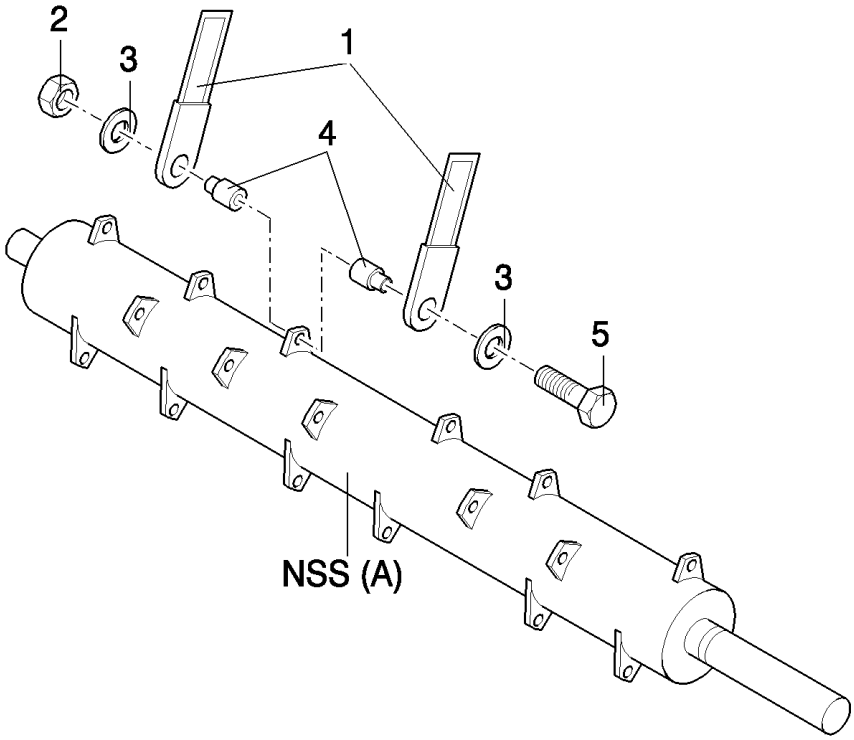

TX68 COMBINE - BASE UNIT

11.041(01) ROTOR

ссылка	Номер детали	Кол-во	Описание
	322332000	1	ROTOR, (1 to 5,A), FOR TX66-67-68 ONLY
	322332200	1	ROTOR, (1 to 5,A), FOR TX62-63-64-65 ONLY
1	322326450	68	KNIFE, , FOR TX66-67-68 ONLY
1	322326450	56	KNIFE, , FOR TX62-63-64-65 ONLY
2	12575621	AR	NUT, M10
3	322330550	AR	WASHER, LOCK, 10MM
4	322331350	68	BUSHING, , FOR TX66-67-68 ONLY
4	322331350	56	BUSHING, , FOR TX62-63-64-65 ONLY
5	11343831	AR	BOLT, Hex, M10 x 1.25 x 50, 10.9,

11.042(01) ROTOR

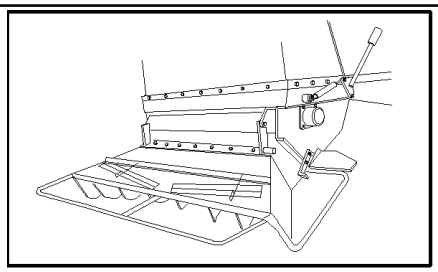

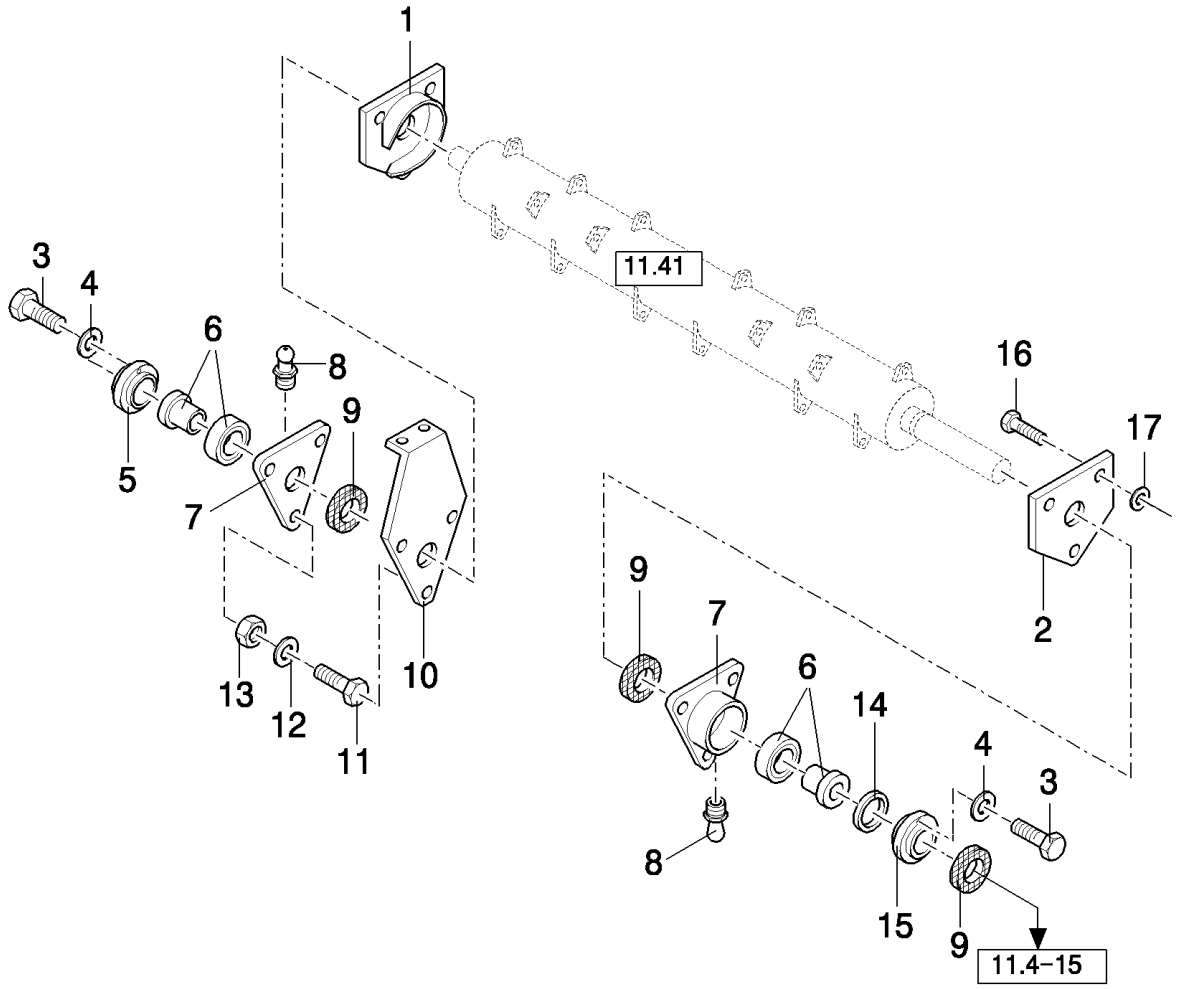

TX68 COMBINE - BASE UNIT

11.042(01) ROTOR

ссылка	Номер детали	Кол-во	Описание
1	322228050	1	GUARD, RH
2	322162250	1	GUARD, LH
3	120100	6	BOLT, Hex, M6 x 20, 8.8,
4	322357	6	WASHER, SPRING, Belleville, M6,
5	322329850	1	COVER,
6	340403646	2	BEARING ASSY,
7	322329650	2	SUPPORT,
8	350357851	2	NIPPLE, LUBE,
9	353587212	3	GASKET,
10	322322650	1	PLATE,
11	86629541	4	BOLT, Hex, M12 x 40, 8.8, Full Thd,
12	140046	8	WASHER, Belleville, M12,
13	9706685	8	NUT, M12, Cl 8,
14	340415665	1	WASHER, LOCK, , -C1161
15	322329750	1	COVER,
16	89706630	2	SCREW, M12x60
17	394630	4	WASHER, 13MM

TX68 COMBINE - BASE UNIT

11.043(01) SPREAD CASING

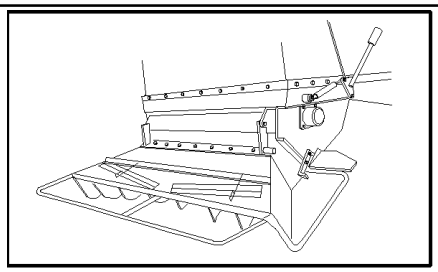

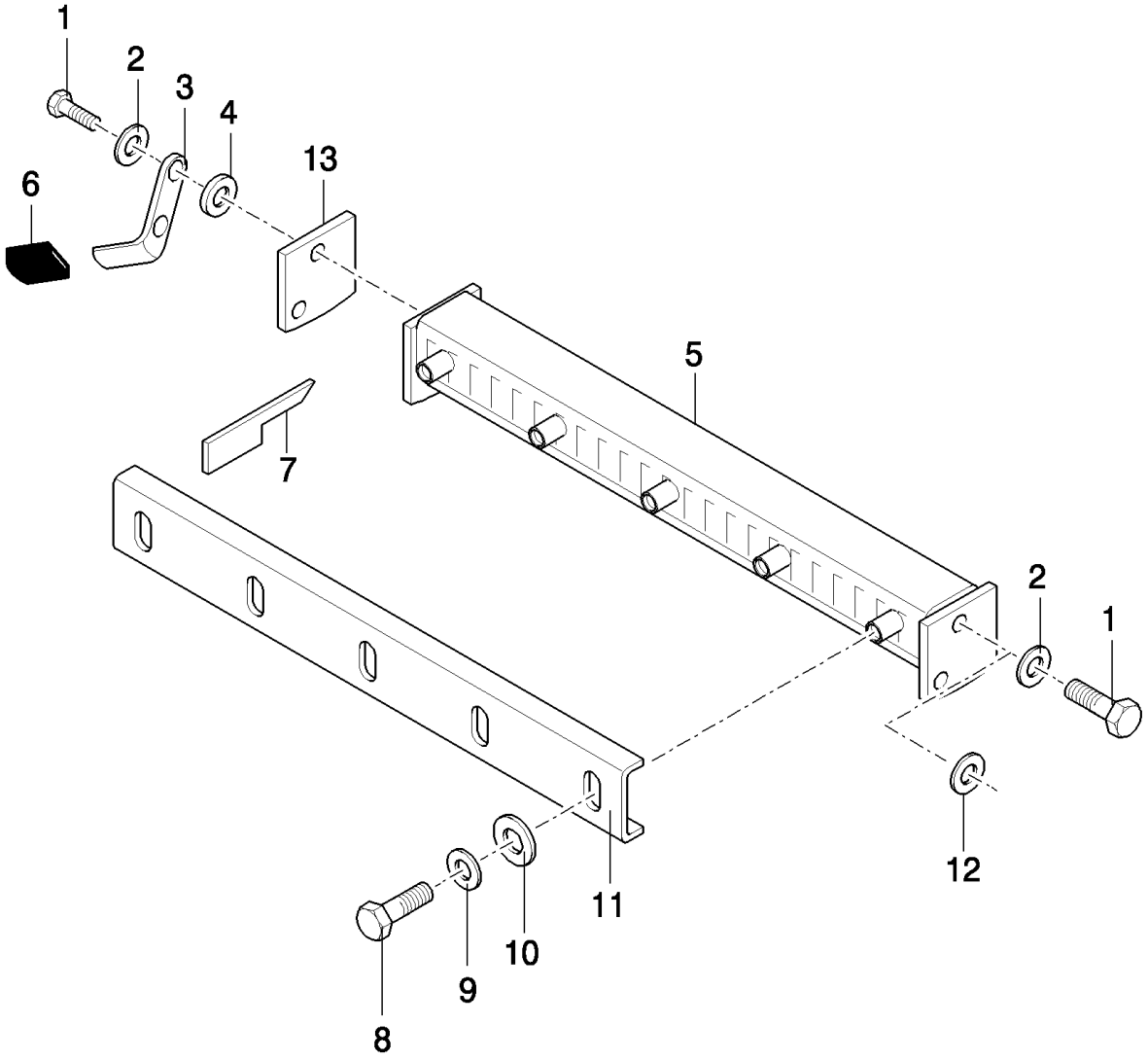

TX68 COMBINE - BASE UNIT

11.043(01) SPREAD CASING

ссылка	Номер детали	Кол-во	Описание
1	43167	4	BOLT, Hex, M16 x 30, 8.8, Full Thd,
2	140048	4	WASHER, SPRING, Belleville, M16,
3	322322950	1	LEVER,
4	355501715	2	WASHER, 17MM
5	322323550	1	SUPPORT, , FOR TX66-67-68 ONLY, BSN C305
5	84817982	1	SUPPORT, , FOR TX66-67-68 ONLY, ASN D306
5	322312450	1	SUPPORT, , FOR TX62-63-64-65 ONLY, BSN C305
5	84817983	1	SUPPORT, , FOR TX62-63-64-65 ONLY, ASN D306
6	322328750	1	HANDLE GRIP,
7	322291650	64	KNIFE, , FOR TX66-67-68 ONLY
7	322291650	54	KNIFE, , FOR TX62-63-64-65 ONLY
8	120104	AR	SCREW, Hex, M8 x 20, 8.8,
9	322358	AR	WASHER, SPRING, Belleville, M8,
10	355510820	AR	WASHER,
11	322258250	1	PLATE, , FOR TX66-67-68 ONLY
11	322312550	1	PLATE, , FOR TX62-63-64-65 ONLY
12	355532830	1	WASHER, 16MM, D1162-
13	322399450	2	SHIM, , D1162-

11.044(01) ROTOR FRAME

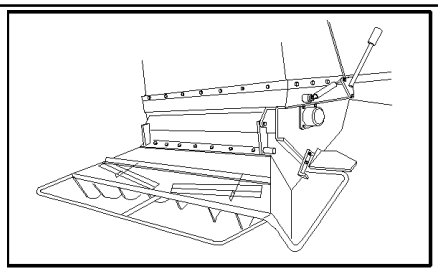

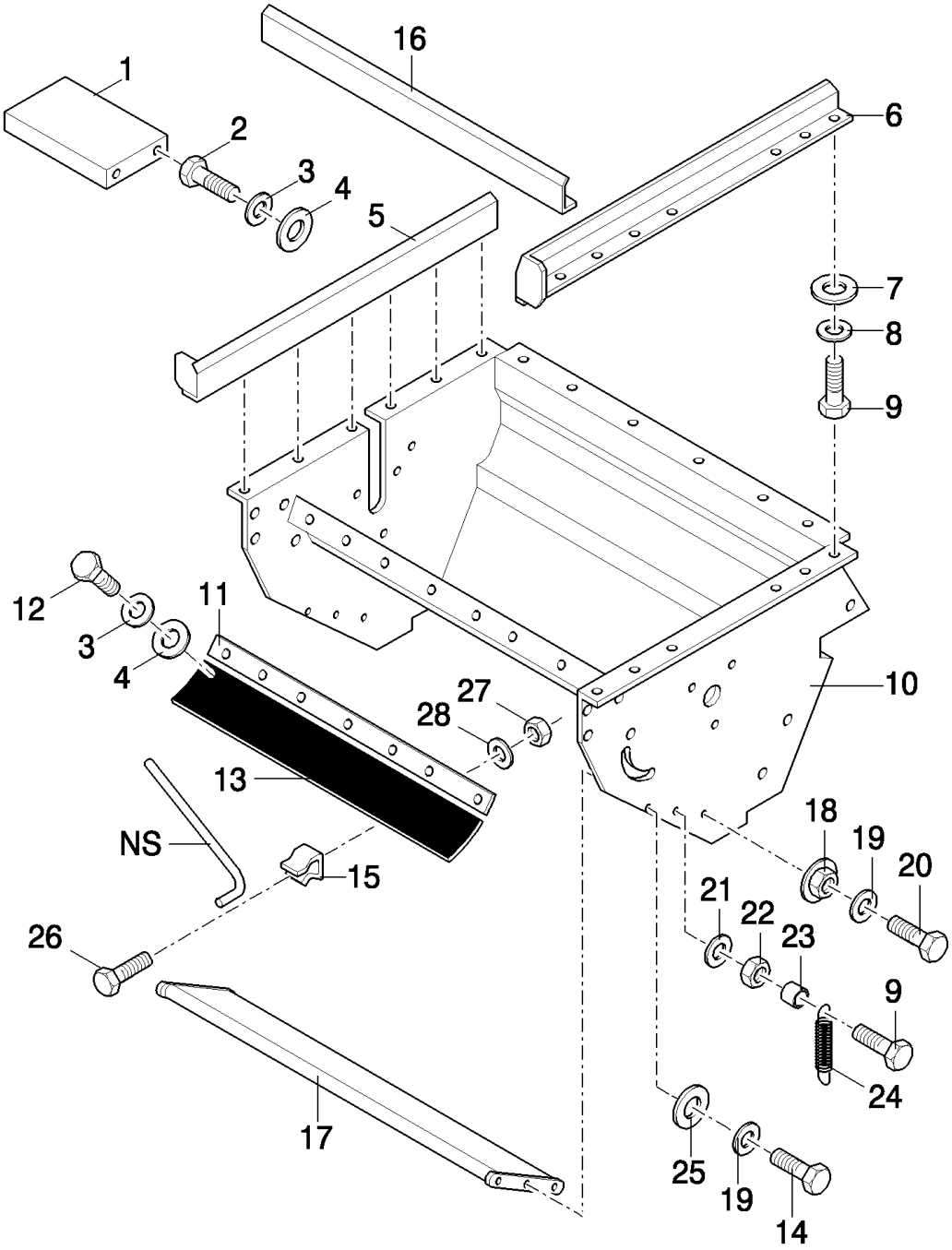

TX68 COMBINE - BASE UNIT

11.044(01) ROTOR FRAME

ссылка	Номер детали	Кол-во	Описание
1	322294850	1	SHIELD,
2	86508568	2	SCREW, Hex, M6 x 16, 8.8,
3	322357	AR	WASHER, SPRING, Belleville, M6,
4	355510620	AR	WASHER, 6MM
5	322322150	1	PROFILE, , -C1161
5	322756250	1	PROFILE, , D1162-
6	322322250	1	PROFILE, , -C1161
6	322756150	1	PROFILE, , D1162-
7	355510820	AR	WASHER, 8MM
8	322358	AR	WASHER, SPRING, Belleville, M8,
9	43128	AR	BOLT, Hex, M8 x 30, 8.8,
10	322322550	1	FRAME, (14), FOR TX66-67-68 ONLY, -C1161
10	322753450	1	FRAME, (14), FOR TX66-67-68 ONLY, D1162-
10	322322750	1	FRAME, (14), FOR TX62-63-64-65 ONLY, -C1161
10	322754250	1	FRAME, (14), FOR TX62-63-64-65 ONLY, D1162-
11	322333350	1	PLATE, FIXING, , FOR TX66-67-68 ONLY
11	322321050	1	PLATE, FIXING, , FOR TX62-63-64-65 ONLY
12	120100	AR	BOLT, Hex, M6 x 20, 8.8,
13	322324650	1	CANVAS, , FOR TX66-67-68 ONLY
13	322321250	1	CANVAS, , FOR TX62-63-64-65 ONLY
14	11112424	2	BOLT, Hex, M12 x 30, 8.8, Full Thd,
15	322294350	1	CLIP,
16	322322350	1	PLATE, , FOR TX66-67-68 ONLY
16	322322450	1	PLATE, , FOR TX62-63-64-65 ONLY
17	322331450	1	PLATE, , FOR TX66-67-68 ONLY, -C1161
17	322331650	1	PLATE, , FOR TX62-63-64-65 ONLY, -C1161
18	84023057	2	NUT, , -C1161
19	140046	4	WASHER, Belleville, M12, , -C1161
20	11113221	2	BOLT, Hex, M12 x 50, 8.8, M12x50, -C1161
21	355510820	2	WASHER, 8MM, -C1161
22	9706690	2	NUT, M8, Cl 8, , -C1161
23	322331950	2	BUSHING, , -C1161
24	350356519	2	SPRING, , -C1161
25	355530620	2	WASHER, 12MM, -C1161
26	10374911	1	SCREW, M4x12, D1162-
27	12574011	1	NUT, LOCK, M4 x .7, Cl 8, , D1162-
28	355510415	1	WASHER, 4MM, D1162-

11.045(01) LOCKING DEVICE

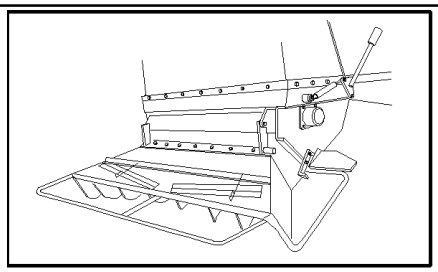

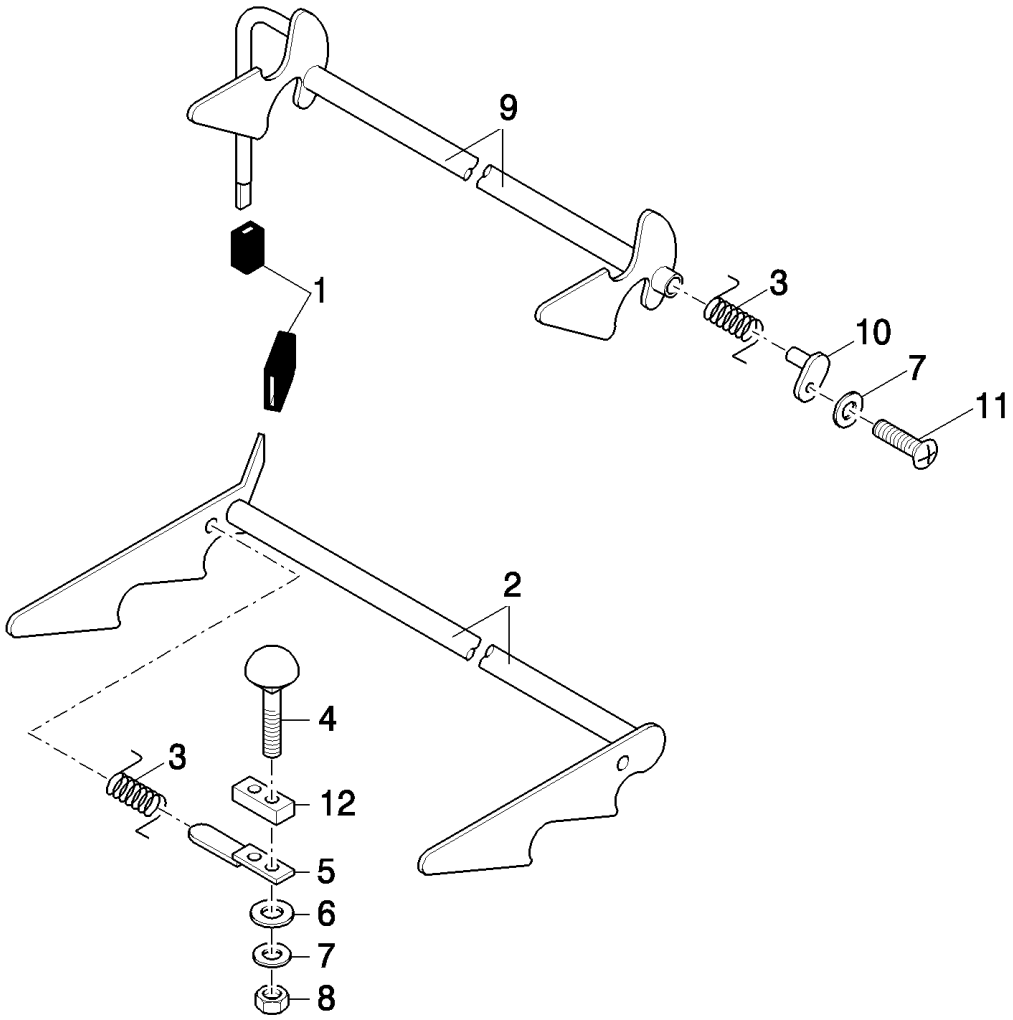

TX68 COMBINE - BASE UNIT

11.045(01) LOCKING DEVICE

ссылка	Номер детали	Кол-во	Описание
1	322328750	2	HANDLE GRIP,
2	322327250	1	HANDLE, , FOR TX66-67-68 ONLY
2	322328350	1	HANDLE, , FOR TX62-63-64-65 ONLY
3	350356936	2	SPRING, LH
3	350356937	2	SPRING, RH
4	350342512	4	SCREW, M8x25
4	350342517	4	SCREW, M8x50
5	322328450	1	PIN,
6	140041	AR	WASHER, M8 x 28 x 3, , -C1161
6	355510820	AR	WASHER, 8MM
7	322358	6	WASHER, SPRING, Belleville, M8,
8	89706690	4	NUT, M8, Cl 8,
9	322327350	1	LEVER, , FOR TX66-67-68 ONLY
9	322328150	1	LEVER, , FOR TX62-63-64-65 ONLY
10	322413450	2	PIN,
12	322754150	2	SPACER, , D1162-
11	16043224	2	BOLT, Hex, M8 x 16, 8.8, Full Thd,

11.046(01) DEFLECTOR PLATES

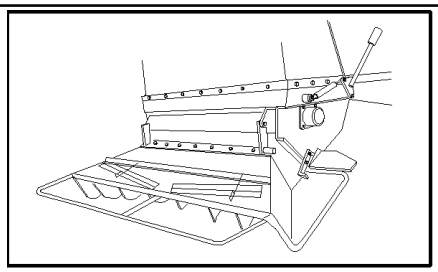

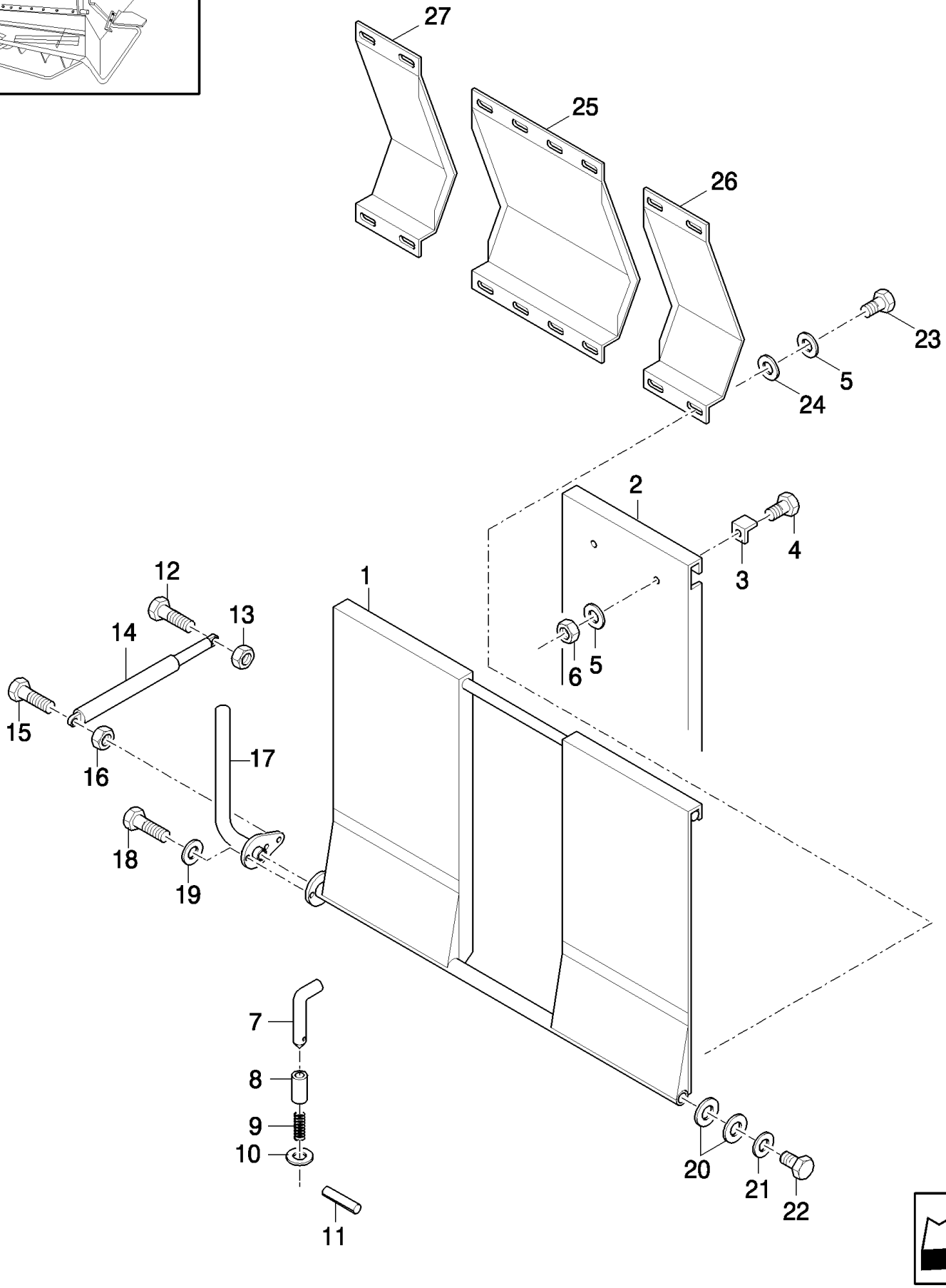

TX68 COMBINE - BASE UNIT

11.046(01) DEFLECTOR PLATES

ссылка	Номер детали	Кол-во	Описание
1	322754850	1	FRAME, , FOR TX66-67-68 ONLY
1	322754750	1	FRAME, , FOR TX62-63-64-65 ONLY
2	322755050	1	PLATE, , FOR TX66-67-68 ONLY
2	322754950	1	PLATE, , FOR TX62-63-64-65 ONLY
3	322326150	2	BRACKET, SUPPORTING,
4	366000612	AR	SCREW, M6x16
5	322357	AR	WASHER, SPRING, Belleville, M6,
6	15896221	AR	NUT, M6, Cl 10,
7	322324250	2	PIN,
8	322331250	2	BUSHING,
9	350356208	2	SPRING,
10	355530130	2	WASHER,
11	13902070	2	PIN, ROLL, M3.5 x 16, Coiled,
12	43127	1	BOLT, Hex, M8 x 25, 8.8,
13	89706690	1	NUT, M8, Cl 8,
14	320792350	1	SHOCK ABSORBER,
15	412479	1	BOLT, Hex, M8 x 35, 8.8,
16	322324050	1	NUT,
17	322324150	1	LEVER,
18	120104	2	SCREW, Hex, M8 x 20, 8.8,
19	322358	2	WASHER, SPRING, Belleville, M8,
20	355531220	1	WASHER,
21	140048	1	WASHER, SPRING, Belleville, M16,
22	322290550	1	SCREW,
23	120100	AR	BOLT, Hex, M6 x 20, 8.8, , D1162-
24	355510620	AR	WASHER, , D1162-
25	322755450	1	PLATE, , FOR TX66-67-68 ONLY, D1162-
25	322755150	1	PLATE, , FOR TX62-63-64-65 ONLY, D1162-
26	322755550	1	PLATE, LH, FOR TX66-67-68 ONLY, D1162-
26	322755250	1	PLATE, LH, FOR TX62-63-64-65 ONLY, D1162-
27	322755650	1	PLATE, RH, FOR TX66-67-68 ONLY, D1162-
27	322755350	1	PLATE, RH, FOR TX62-63-64-65 ONLY, D1162-

11.047(01) DEFLECTOR PLATES

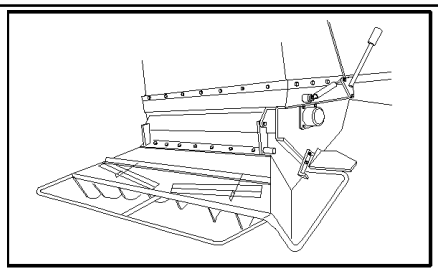

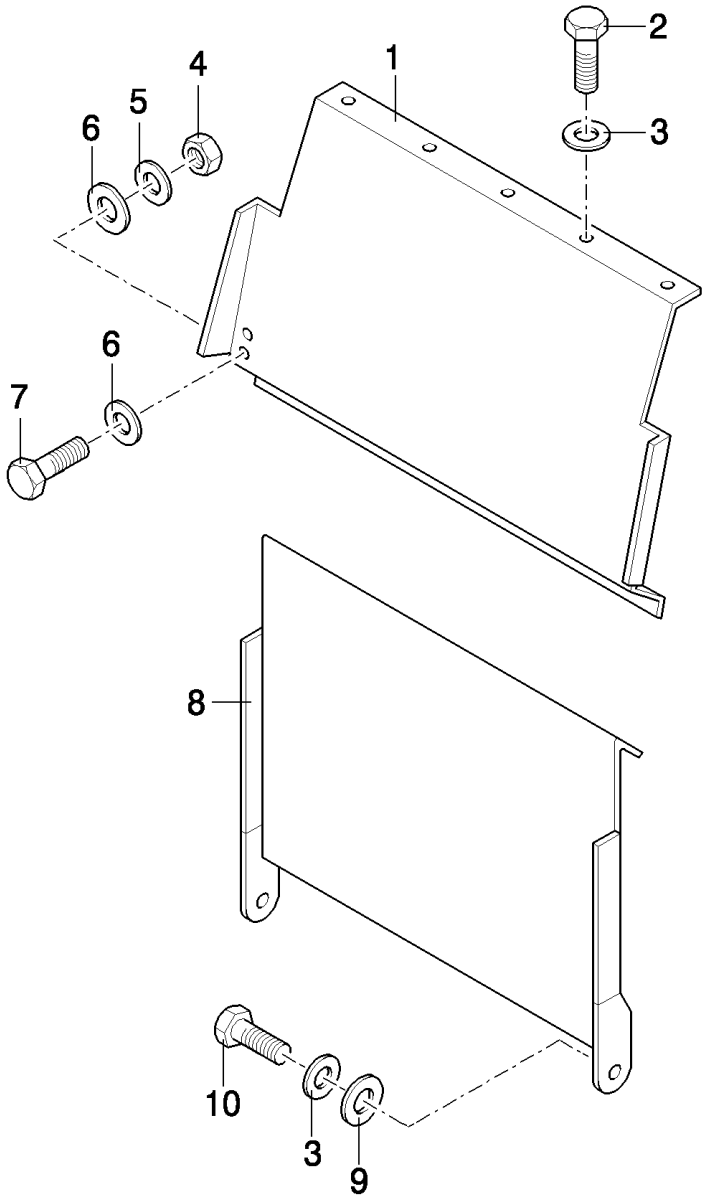

TX68 COMBINE - BASE UNIT

11.047(01) DEFLECTOR PLATES

ссылка	Номер детали	Кол-во	Описание
1	322323850	1	PLATE, , FOR TX66-67-68 ONLY
1	322323950	1	PLATE, , FOR TX62-63-64-65 ONLY
2	120104	AR	SCREW, Hex, M8 x 20, 8.8,
3	322358	AR	WASHER, SPRING, Belleville, M8,
4	15896221	4	NUT, M6, Cl 10,
5	322357	4	WASHER, SPRING, Belleville, M6,
6	355500720	8	WASHER,
7	120100	4	BOLT, Hex, M6 x 20, 8.8,
8	322326050	1	PLATE, , FOR TX66-67-68 ONLY, -C1161
8	322756450	1	PLATE, , FOR TX66-67-68 ONLY, D1162-
8	322325950	1	PLATE, , FOR TX62-63-64-65 ONLY, -C1161
8	322756350	1	PLATE, , FOR TX62-63-64-65 ONLY, D1162-
9	355510820	2	WASHER, 8MM
10	43127	2	BOLT, Hex, M8 x 25, 8.8,

11.048(01) MANUAL ADJUSTABLE DEFLECTORS

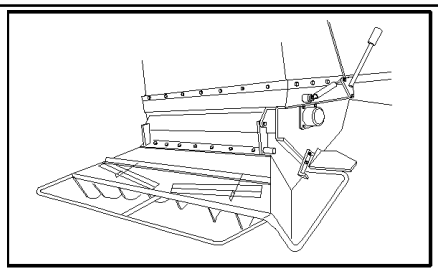

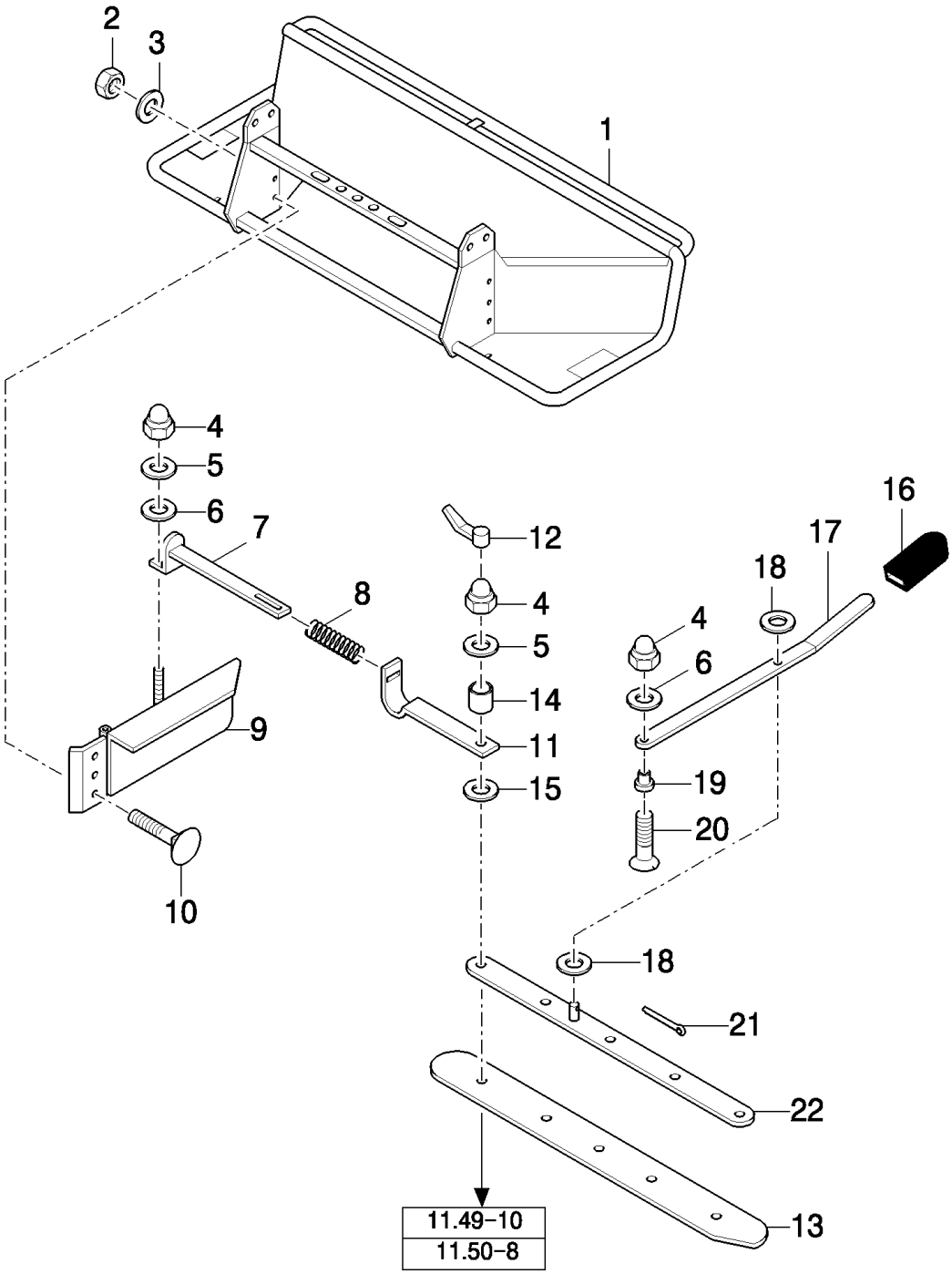

TX68 COMBINE - BASE UNIT

11.048(01) MANUAL ADJUSTABLE DEFLECTORS

ссылка	Номер детали	Кол-во	Описание
1	322394450	1	FRAME, , FOR TX66-67-68 ONLY, -C1161
1	322753350	1	FRAME, , FOR TX66-67-68 ONLY, D1162-
1	322394750	1	FRAME, , FOR TX62-63-64-65 ONLY, -C1161
1	322754350	1	FRAME, , FOR TX62-63-64-65 ONLY, D1162-
2	322218650	6	NUT, M6
3	355510620	6	WASHER, 6MM
4	322218750	2	NUT, M8
5	321365050	8	WASHER, 8MM
6	378243	2	WASHER, M8,
7	322337850	2	ARM,
8	353561167	2	SPRING,
9	322258750	1	DEFLECTOR, LH
9	322258850	1	DEFLECTOR, RH
10	366000614	6	SCREW, M6x20
11	322337950	2	BRACKET,
12	322274350	2	PIN, LOCK, RH
13	322336650	2	PAD, SLIDING, , FOR TX66-67-68 ONLY
13	322336850	2	PAD, SLIDING, , FOR TX62-63-64-65 ONLY
14	340415206	2	SPACER,
15	355520860	2	WASHER,
16	322337750	2	HANDLE GRIP,
17	322336950	2	LEVER,
18	355532620	AR	WASHER, 16MM
19	322337250	2	BUSHING,
20	14442321	2	SCREW, Hex Soc Flat Hd, M8 x 35, 8.8,
21	10733601	2	PIN, SPLIT (COTTER), M3.2 x 22,
22	322336550	2	PAD, SLIDING, , FOR TX66-67-68 ONLY
22	322336750	2	PAD, SLIDING, , FOR TX62-63-64-65 ONLY

11.049(01) MANUAL ADJUSTABLE DEFLECTORS

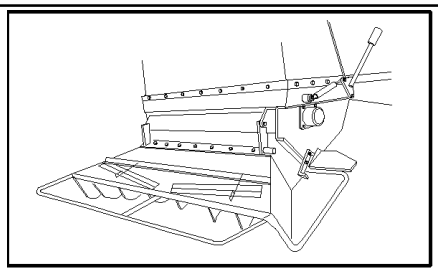

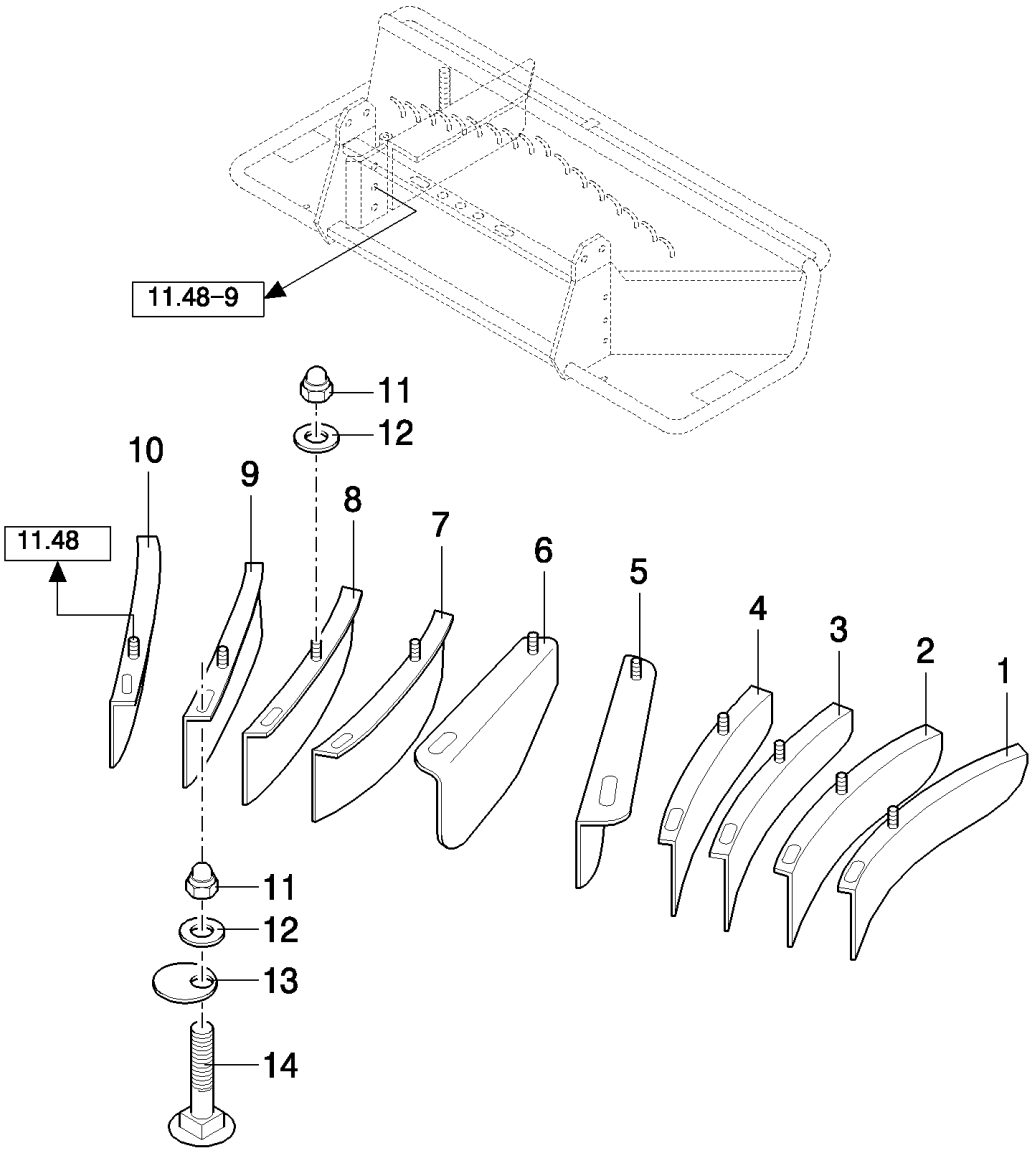

TX68 COMBINE - BASE UNIT

11.049(01) MANUAL ADJUSTABLE DEFLECTORS

ссылка	Номер детали	Кол-во	Описание
1	322260950	1	DEFLECTOR, LH
2	322260850	1	DEFLECTOR, LH
3	322260750	1	DEFLECTOR, LH
4	322260650	1	DEFLECTOR, LH
5	322261050	1	DEFLECTOR,
6	322261150	1	DEFLECTOR,
7	322261250	1	DEFLECTOR, RH
8	322261350	1	DEFLECTOR, RH
9	322261450	1	DEFLECTOR, RH
10	322261550	1	DEFLECTOR, RH
11	322218750	18	NUT, M8
12	321365050	36	WASHER, 8MM
13	322338450	10	DISC, , -C1161
13	355510820	10	WASHER, , D1162-
14	350342512	10	SCREW, M8x25, -C1161
14	350342511	10	SCREW, M8x20, D1162-

11.051(01) FIXED DEFLECTORS

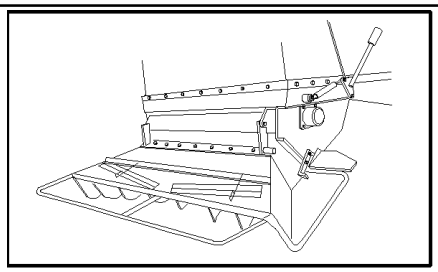

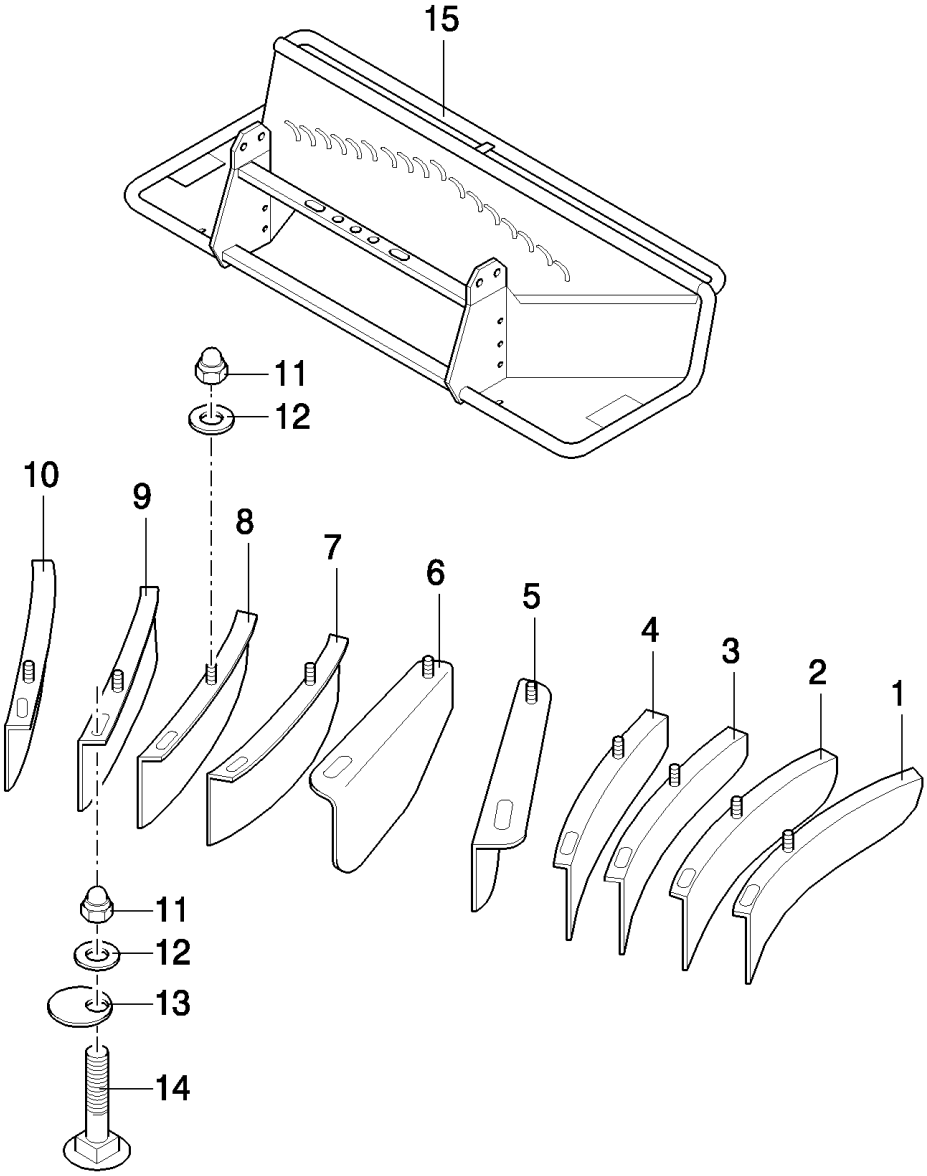

TX68 COMBINE - BASE UNIT

11.051(01) FIXED DEFLECTORS

ссылка	Номер детали	Кол-во	Описание
1	322340950	1	DEFLECTOR,
2	322341650	1	DEFLECTOR,
3	322341550	1	DEFLECTOR,
4	322341450	1	DEFLECTOR,
5	322341850	1	DEFLECTOR,
6	322341750	1	DEFLECTOR,
7	322341150	1	DEFLECTOR,
8	322341250	1	DEFLECTOR,
9	322341350	1	DEFLECTOR,
10	322341050	1	DEFLECTOR,
11	322218750	20	NUT, M8
12	321365050	36	WASHER, 8MM
13	322338450	10	DISC, , -C1161
13	355510820	10	WASHER, , D1162-
14	350342512	10	SCREW, M8x25, -C1161
14	350342511	10	SCREW, M8x20, D1162-
15	322339050	1	ENVELOPE, , -C1161
15	322753350	1	FRAME, , D1162-

11.053(01) SPREAD CASING

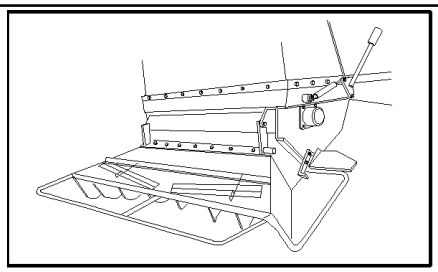

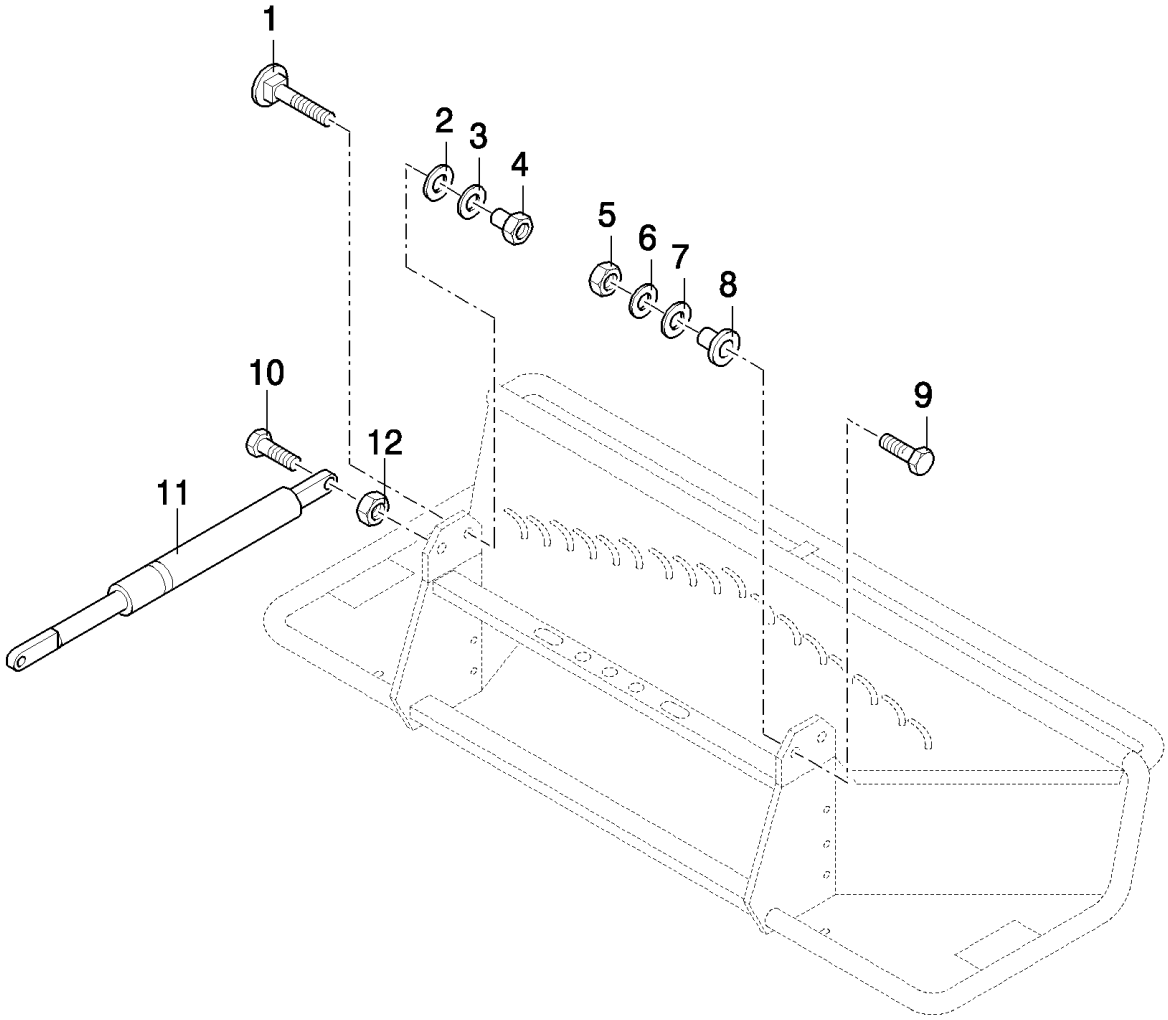

TX68 COMBINE - BASE UNIT

11.053(01) SPREAD CASING

ссылка	Номер детали	Кол-во	Описание
1	13186101	2	BOLT, CARRIAGE, Short NK, M12 x 35, Cl5.8, Full Thd, M12x35
1	120044	2	BOLT, CARRIAGE, Short NK, M12 x 30, Cl8.8, Full Thd,
2	355501330	2	WASHER, 13MM, -C1161
2	394630	2	WASHER, , D1162-
3	140046	2	WASHER, Belleville, M12,
4	322328550	2	SLEEVE,
5	100020	2	NUT, M16, Cl 8,
6	140048	2	WASHER, SPRING, Belleville, M16,
7	355532830	2	WASHER, 16MM
8	322268450	2	BUSHING,
9	120090	2	SCREW, Hex, M16 x 50, 8.8,
10	43127	2	BOLT, Hex, M8 x 25, 8.8,
11	322325550	1	SHOCK ABSORBER,
12	9706690	2	NUT, M8, Cl 8,

11.054(01) ELECTRICAL ADJUSTABLE DEFLECTORS

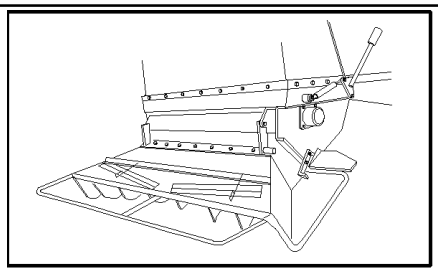

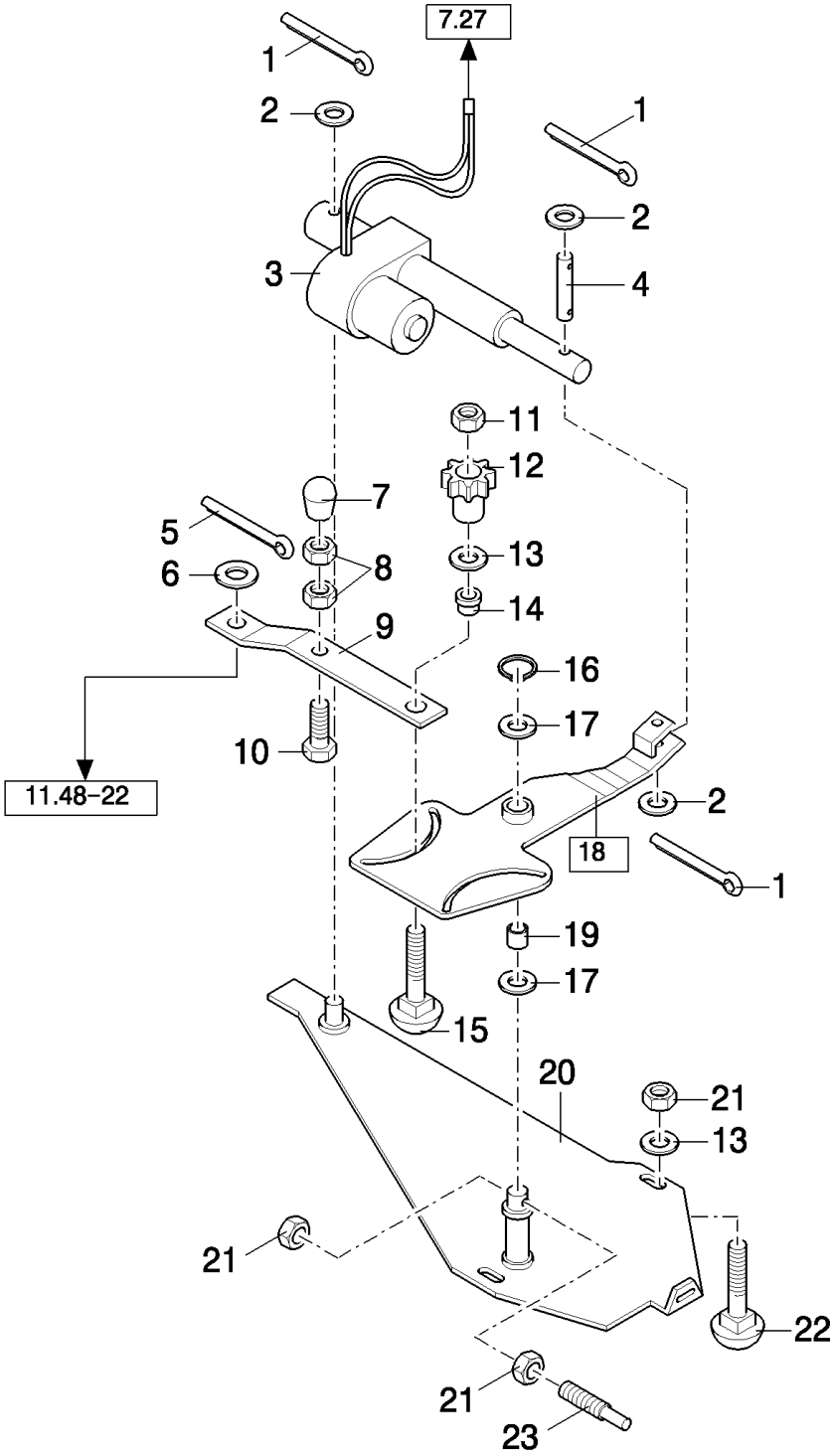

TX68 COMBINE - BASE UNIT

11.054(01) ELECTRICAL ADJUSTABLE DEFLECTORS

ссылка	Номер детали	Кол-во	Описание
1	130003	3	PIN, SPLIT (COTTER), M3.2 x 20,
2	378245	3	WASHER, M12,
3	84018921	1	ACTUATOR,
4	84017216	1	PIN,
5	130004	2	PIN, SPLIT (COTTER), M3.2 x 25,
6	378246	2	WASHER, 16MM
7	372783	2	KNOB,
8	323238	4	NUT, Thin, M12 x 1.75, Cl 05, M12
9	84018322	2	PAD, ADJUSTING,
10	300389	2	BOLT, Hex, M12 x 35, 8.8, Full Thd,
11	88902	2	NUT, LOCK, 3/8"-16, GC,
12	703270	2	KNOB,
13	140045	4	WASHER, SPRING, Belleville, M10,
14	84018320	2	BUSHING,
15	280745	2	BOLT, CARRIAGE, Short NK, 3/8"-16 x 2", G5,
16	370002	1	RING, SNAP, M25, Ext,
17	140103	2	WASHER,
18	84320045	1	LEVER, (19)
19	80395589	1	SLEEVE,
20	84018323	1	SUPPORT,
21	100016	4	NUT, M10, Cl 8,
22	V43471	2	BOLT, M10x20
23	84018597	1	ROD, THREADED,

11.055(01) SHIELD FOR ELECTRICAL ADJUSTABLE DEFLECTORS

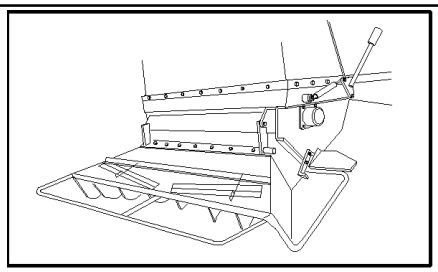

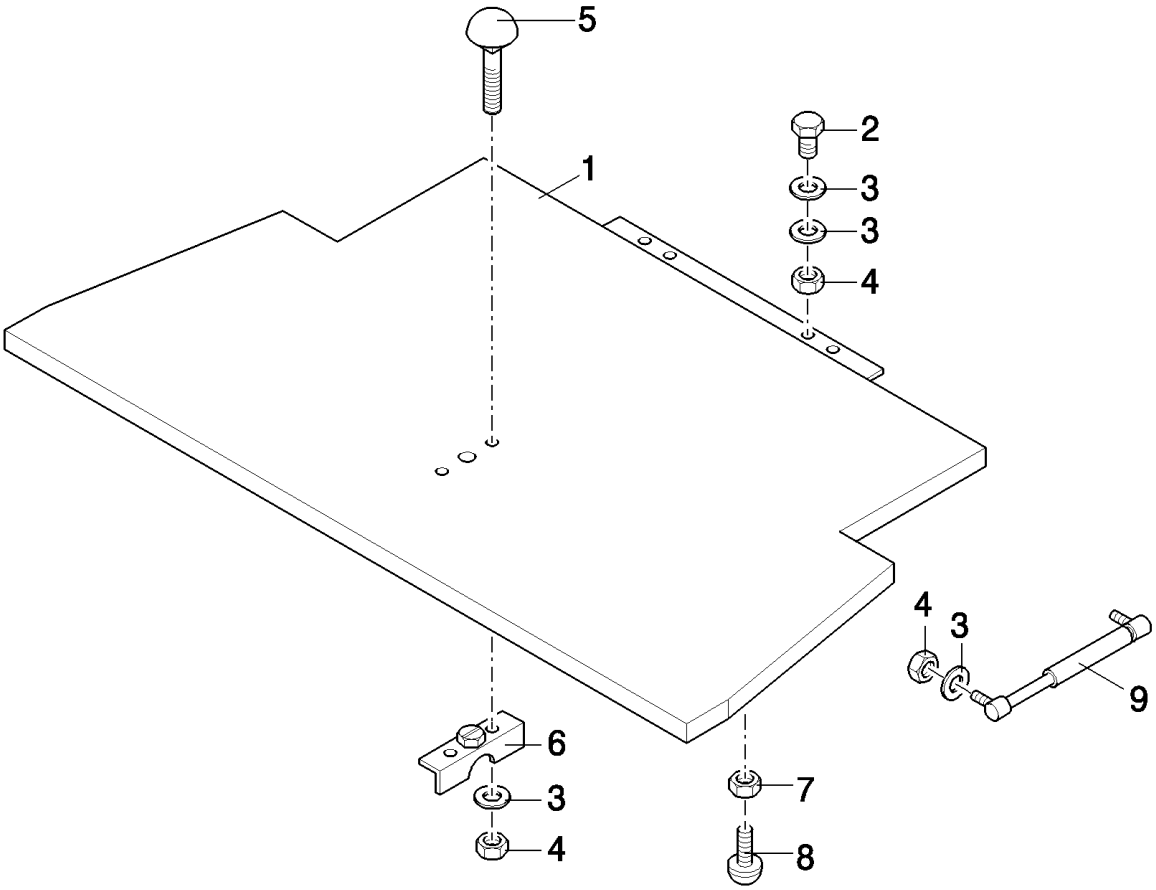

TX68 COMBINE - BASE UNIT

11.055(01) SHIELD FOR ELECTRICAL ADJUSTABLE DEFLECTORS

ссылка	Номер детали	Кол-во	Описание
1	84018560	1	COVER, , FOR TX66-67-68 ONLY
1	84019420	1	COVER, , FOR TX62-63-64-65 ONLY
2	120104	4	SCREW, Hex, M8 x 20, 8.8,
3	322358	12	WASHER, SPRING, Belleville, M8,
4	9706690	8	NUT, M8, Cl 8,
5	86507486	2	BOLT, CARRIAGE, Short NK, M8 x 20, Cl8.8, Full Thd,
6	84015292	1	LOCK,
7	354720	2	NUT, Thin, M10 x 1.5, Cl 04,
8	190029	1	INSULATOR BLOCK,
9	E7NN94231N00BB	1	GAS STRUT,

11.061(01) CHOPPER UNIT

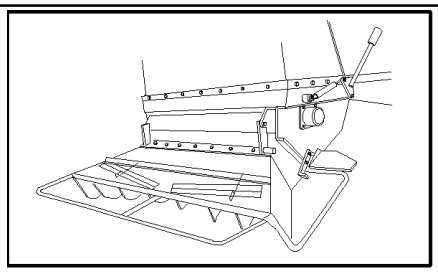

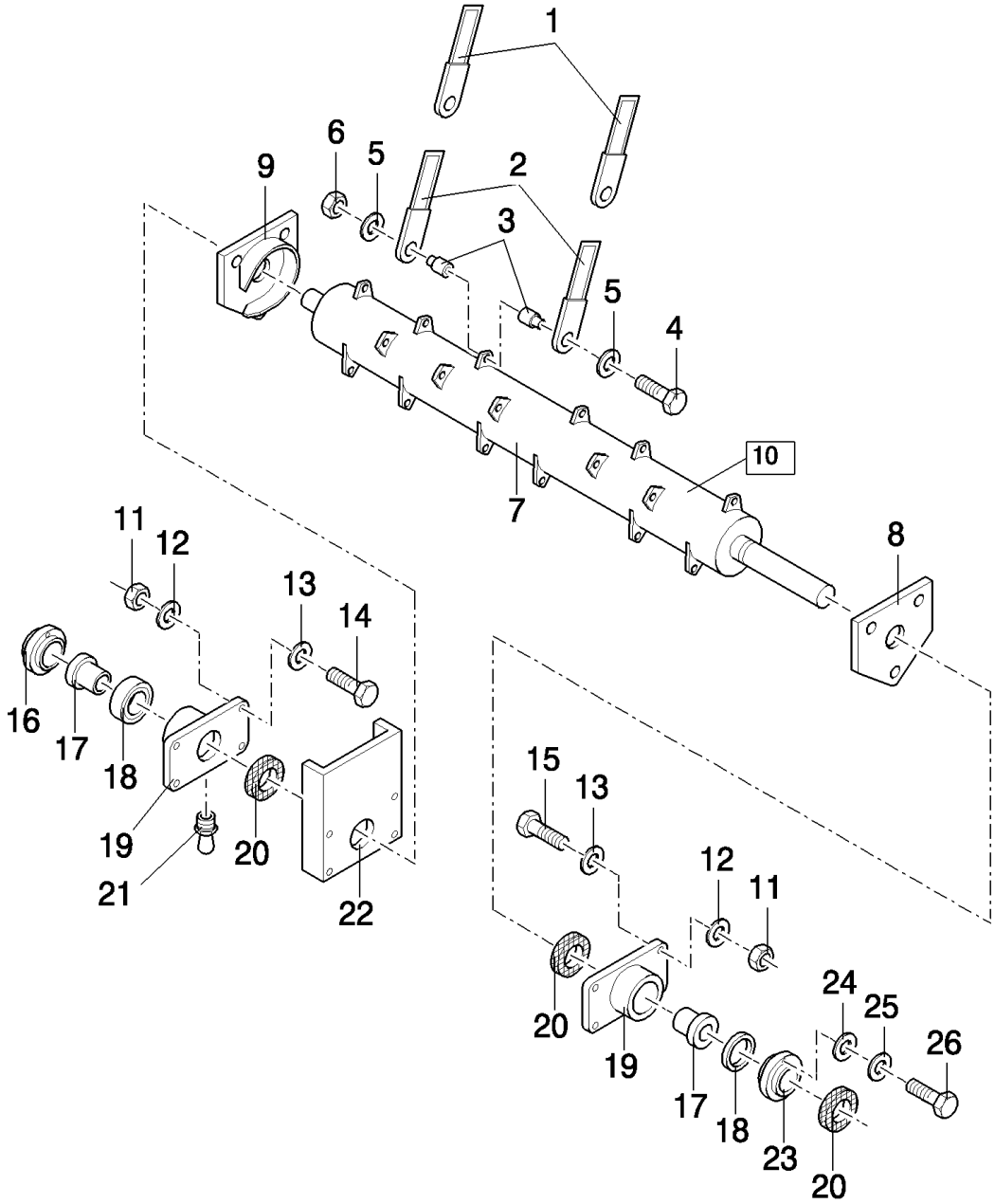

TX68 COMBINE - BASE UNIT

11.061(01) CHOPPER UNIT

ссылка	Номер детали	Кол-во	Описание
1	84037550	68	KNIFE, FINE CHOP, FOR TX66-67-68 ONLY
1	84037550	56	KNIFE, FINE CHOP, FOR TX62-63-64-65 ONLY
2	84037551	68	KNIFE, SMOOTH CHOP, FOR TX66-67-68 ONLY
2	84037551	56	KNIFE, SMOOTH CHOP, FOR TX62-63-64-65 ONLY
3	746732	68	SPACER, , FOR TX66-67-68 ONLY
3	746732	56	SPACER, , FOR TX62-63-64-65 ONLY
4	11343831	34	BOLT, Hex, M10 x 1.25 x 50, 10.9, , FOR TX66-67-68 ONLY
4	11343831	28	BOLT, Hex, M10 x 1.25 x 50, 10.9, , FOR TX62-63-64-65 ONLY
5	322330550	38	WASHER, LOCK, 10MM, FOR TX66-67-68 ONLY
5	322330550	28	WASHER, LOCK, 10MM, FOR TX62-63-64-65 ONLY
6	12575621	34	NUT, M10, FOR TX66-67-68 ONLY
6	12575621	28	NUT, M10, FOR TX62-63-64-65 ONLY
7	746785	1	ROTOR, , FOR TX66-67-68 ONLY
7	84037552	1	ROTOR, , FOR TX62-63-64-65 ONLY
8	746814	1	GUARD, LH
9	746815	1	GUARD, RH
10	84037948	1	ROTOR, (2 to 7), FOR TX66-67-68 ONLY
10	84037947	1	ROTOR, (2 to 7), FOR TX62-63-64-65 ONLY
11	337475	8	NUT, M12, Cl 10,
12	746850	8	WASHER, LOCK, 12MM
13	140046	8	WASHER, Belleville, M12,
14	9706687	6	SCREW, Hex, M12 x 30, 8.8,
15	120122	2	BOLT, Hex, M12 x 50, 8.8, Full Thd,
16	746808	1	COVER,
17	746869	2	BUSHING,
18	746866	2	BEARING ASSY,
19	746806	2	HOUSING, BEARING,
20	746871	3	GASKET,
21	300919	2	NIPPLE, LUBE,
22	84019839	1	PLATE, COVER,
23	746807	1	COVER,
24	80140067	6	6MM
25	322357	6	WASHER, SPRING, Belleville, M6,
26	120100	6	BOLT, Hex, M6 x 20, 8.8,

TX68 COMBINE - BASE UNIT

11.062(01) CHOPPER UNIT

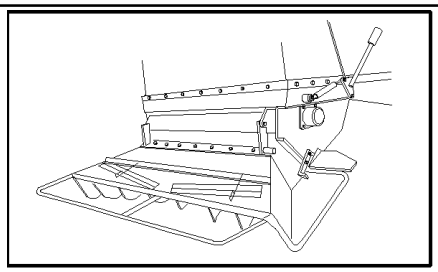

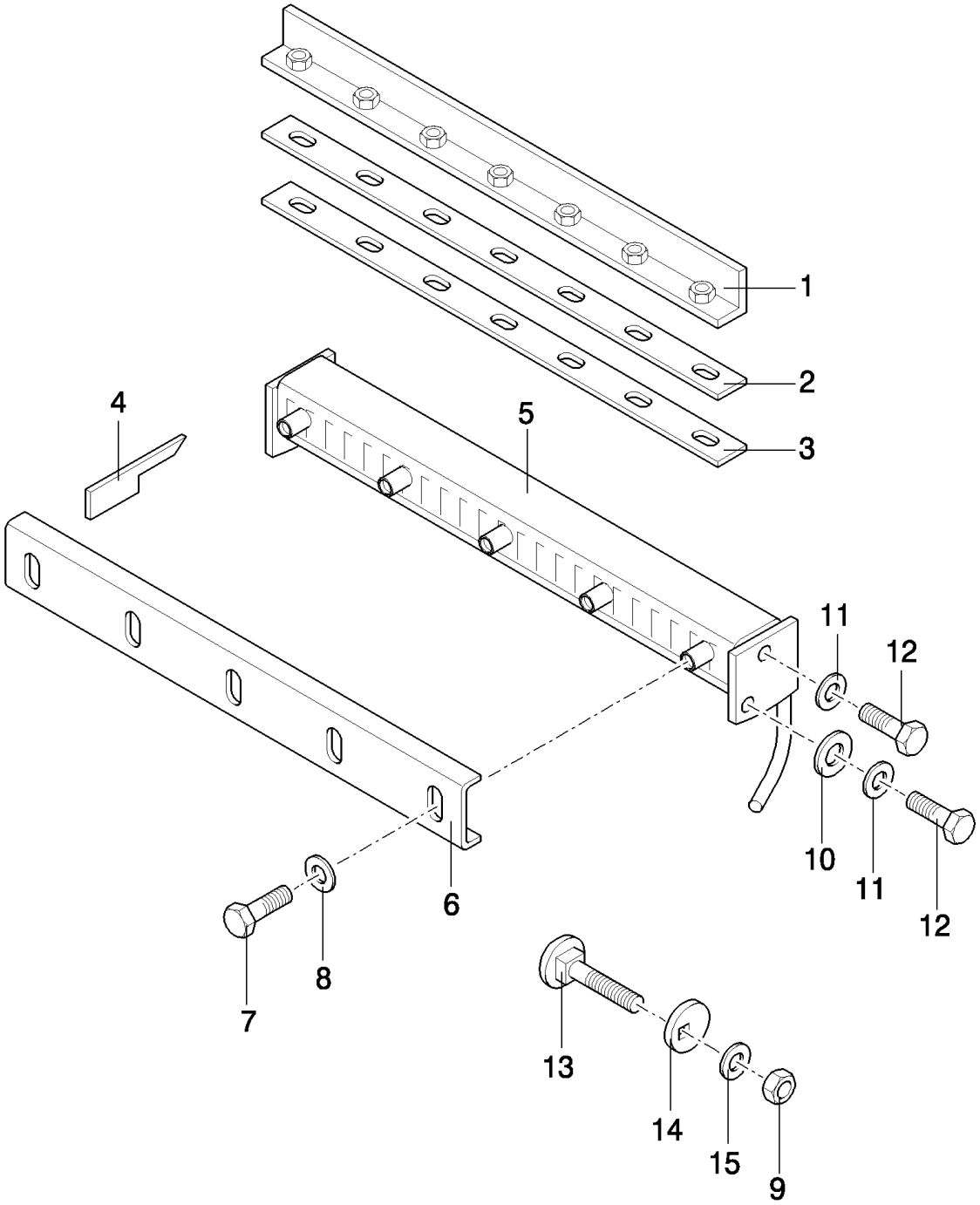

TX68 COMBINE - BASE UNIT

11.062(01) CHOPPER UNIT

ссылка	Номер детали	Кол-во	Описание
1	84037556	1	PROFILE, , FOR TX66-67-68 ONLY
1	89835168	1	PROFILE, , FOR TX62-63-64-65 ONLY
2	84037557	AR	PLATE, ADJUSTING, THK.:2MM, FOR TX66-67-68 ONLY
2	89835171	AR	PLATE, ADJUSTING, THK.:2MM, FOR TX62-63-64-65 ONLY
3	84037558	AR	PLATE, ADJUSTING, THK.:1MM, FOR TX66-67-68 ONLY
3	89835174	AR	PLATE, ADJUSTING, THK.:1MM, FOR TX62-63-64-65 ONLY
4	84037553	64	KNIFE, , FOR TX66-67-68 ONLY
4	84037553	52	KNIFE, , FOR TX62-63-64-65 ONLY
5	84037559	1	SUPPORT, , FOR TX66-67-68 ONLY
5	84037554	1	SUPPORT, , FOR TX62-63-64-65 ONLY
6	746803	1	PLATE, , FOR TX66-67-68 ONLY
6	84037555	1	PLATE, , FOR TX62-63-64-65 ONLY
7	43128	9	BOLT, Hex, M8 x 30, 8.8,
8	412654	9	WASHER, LOCK, 8MM
9	354720	1	NUT, Thin, M10 x 1.5, Cl 04, M10
10	337522	2	WASHER, M16 x 56 x 5,
11	140048	4	WASHER, SPRING, Belleville, M16,
12	374888	4	BOLT, Hex, M16 x 25, 8.8, Full Thd, Hex, M16 x 25, 8.8, Full Thd
13	338949	2	BOLT, CARRIAGE, Short NK, M10 x 25, Cl8.8, Full Thd,
14	84005982	1	WASHER,
15	140045	1	WASHER, SPRING, Belleville, M10,

TX68 COMBINE - BASE UNIT

11.063(01) ROTOR FRAME

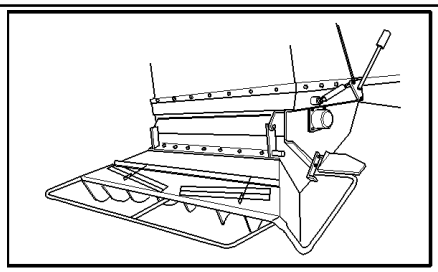

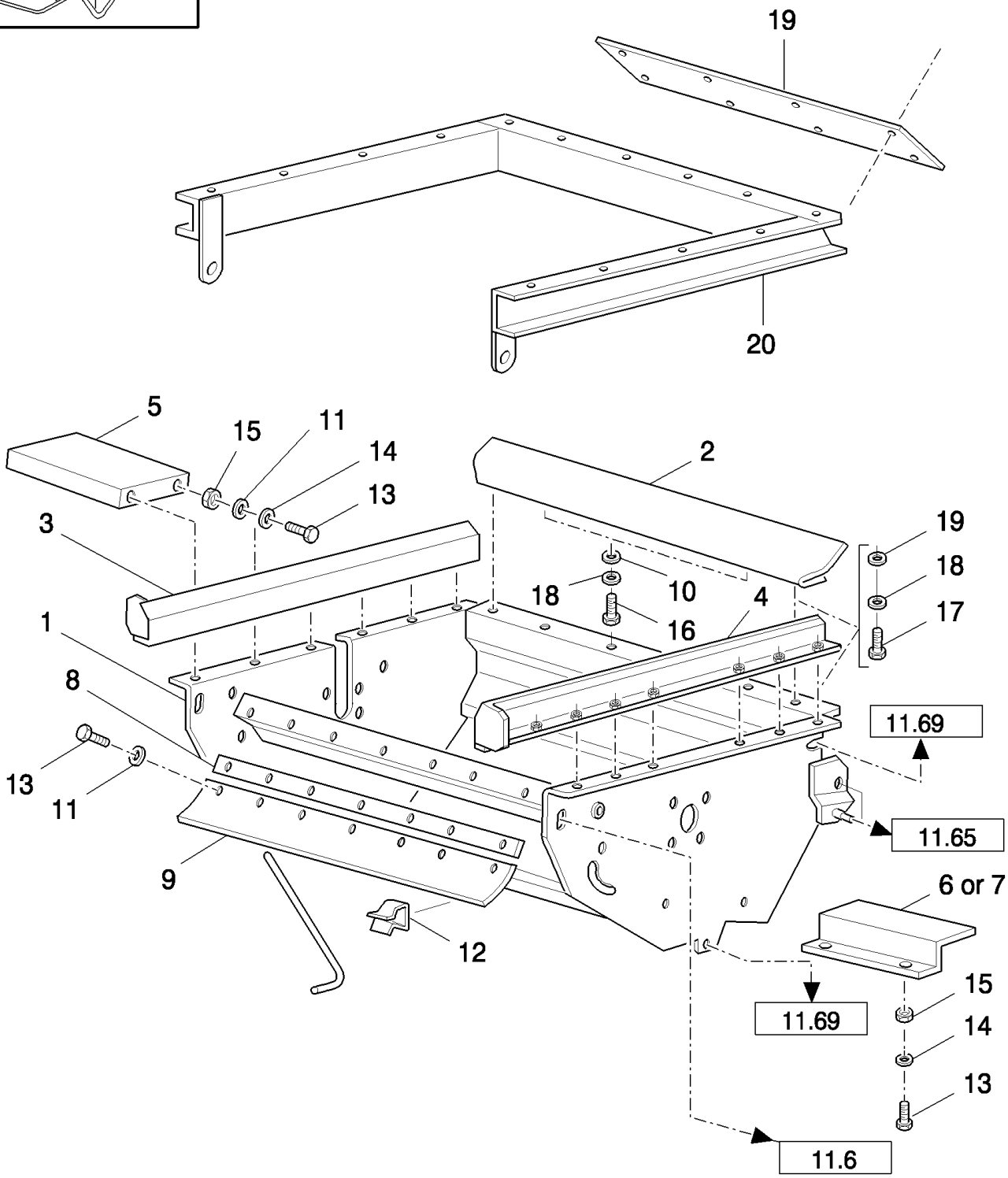

TX68 COMBINE - BASE UNIT

11.063(01) ROTOR FRAME

ссылка	Номер детали	Кол-во	Описание
1	84037573	1	FRAME, , FOR TX66-67-68 ONLY, ONLY IN COMBINATION WITH REF.20
1	84058669	1	FRAME, , FOR TX66-67-68 ONLY
1	84037560	1	FRAME, , ONLY IN COMBINATION WITH REF.20, FOR TX62-63-64-65 ONLY
1	84058668	1	FRAME, , FOR TX62-63-64-65 ONLY
2	84037574	1	SUPPORT, , FOR TX66-67-68 ONLY
2	84037561	1	SUPPORT, , FOR TX62-63-64-65 ONLY
3	84037562	1	PROFILE, RH
4	84037563	1	PROFILE, LH
5	9811658	1	GUARD,
6	84037565	1	PLATE, RH
7	84037566	1	PLATE, LH
8	84037575	1	PLATE, FIXING, , FOR TX66-67-68 ONLY
8	84037567	1	PLATE, FIXING, , FOR TX62-63-64-65 ONLY
9	84037576	1	CANVAS, , FOR TX66-67-68 ONLY
9	84037571	1	CANVAS, , FOR TX62-63-64-65 ONLY
10	378243	AR	WASHER, M8,
11	322357	AR	WASHER, SPRING, Belleville, M6,
12	84037572	1	CLAMP,
13	80120099	2	BOLT, Hex, M6 x 16, 8.8,
14	80140067	2	6MM
15	15896221	2	NUT, M6, Cl 10,
16	43128	AR	BOLT, Hex, M8 x 30, 8.8,
17	120104	AR	SCREW, Hex, M8 x 20, 8.8, M8x10
18	322358	AR	WASHER, SPRING, Belleville, M8,
19	84037578	1	PLATE, , FOR TX66-67-68 ONLY
19	84037950	1	PLATE, , FOR TX62-63-64-65 ONLY
20	84037577	1	SUPPORT, , FOR TX66-67-68 ONLY
20	84037949	1	SUPPORT, , FOR TX62-63-64-65 ONLY

11.064(01) SPREAD CASING

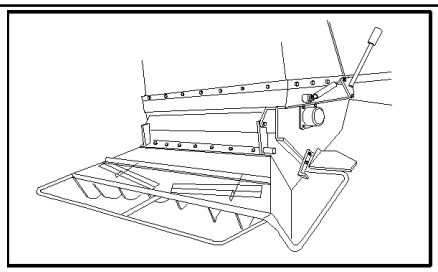

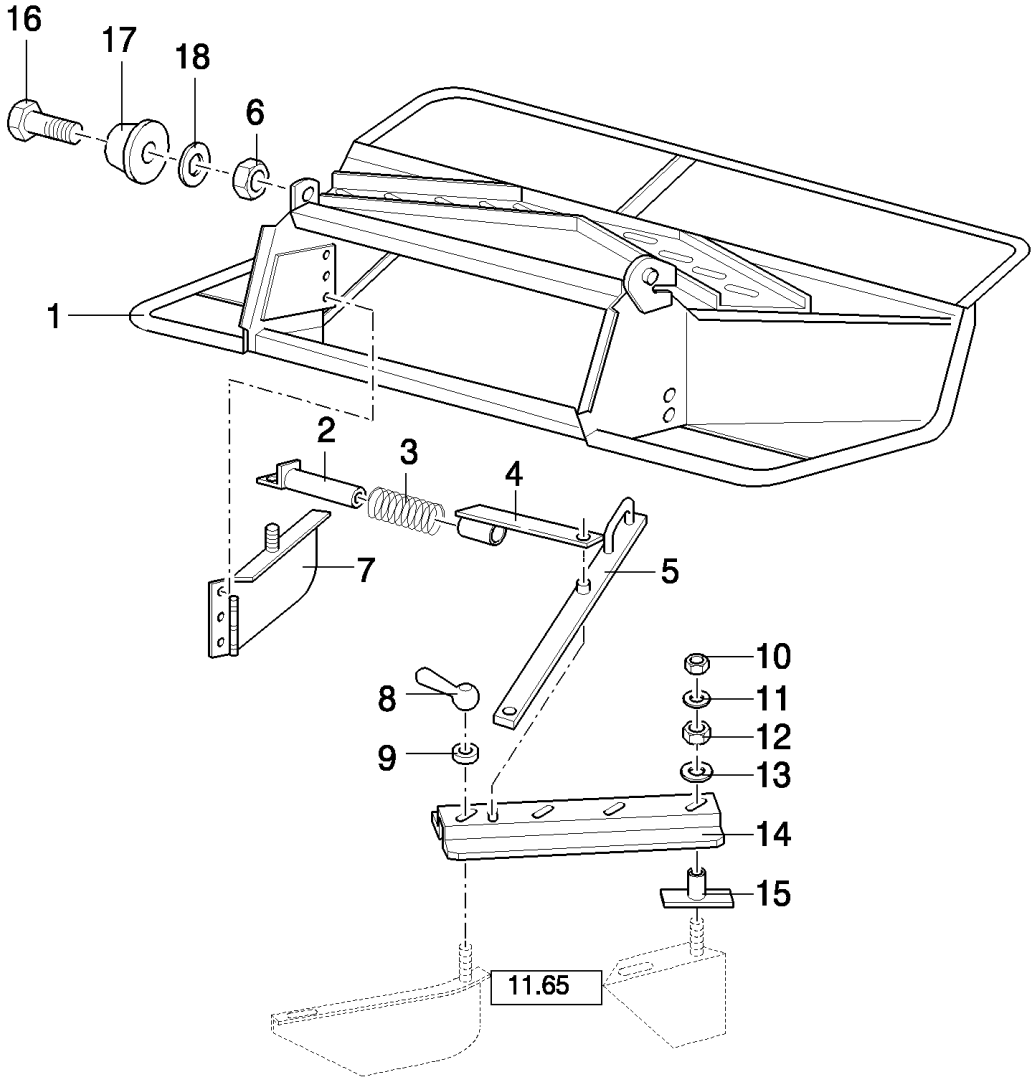

TX68 COMBINE - BASE UNIT

11.064(01) SPREAD CASING

ссылка	Номер детали	Кол-во	Описание
1	84019986	1	ENVELOPE, , FOR TX66-67-68 ONLY
1	84037614	1	ENVELOPE, , FOR TX62-63-64-65 ONLY
2	9835543	2	ARM, , FOR TX66-67-68 ONLY
2	89835551	2	ARM, , FOR TX62-63-64-65 ONLY
3	9835544	2	SPRING,
4	9835545	2	ARM, , FOR TX66-67-68 ONLY
4	84037615	2	ARM, , FOR TX62-63-64-65 ONLY
5	84037616	2	ROD, ADJUSTMENT,
6	86000441	2	NUT, M16 x 2, Cl 8,
7	9835518	1	DEFLECTOR, RH
7	9835517	1	DEFLECTOR, LH
8	9835550	2	HANDLE,
9	9835549	2	SCREW,
10	86629542	AR	NUT, LOCK, M8 x 1.25, Cl 8,
11	746849	AR	WASHER, LOCK,
12	100095	AR	NUT, Thin, M16 x 2, Cl 04,
13	140090	AR	WASHER,
14	84037618	1	SUPPORT, LH, FOR TX66-67-68 ONLY
14	89835538	1	SUPPORT, LH, FOR TX62-63-64-65 ONLY
14	84037619	1	SUPPORT, RH, FOR TX66-67-68 ONLY
14	89835539	1	SUPPORT, RH, FOR TX62-63-64-65 ONLY
15	9835542	AR	PLATE, FIXING,
16	385922	2	SCREW, Hex, M16 x 45, 8.8,
17	746660	2	BUSHING,
18	322357	2	WASHER, SPRING, Belleville, M6,

11.065(01) DEFLECTORS

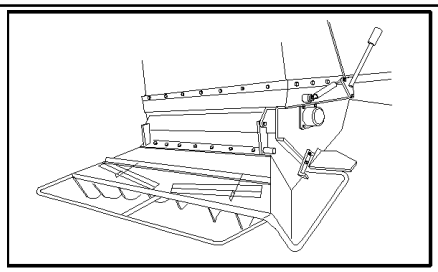

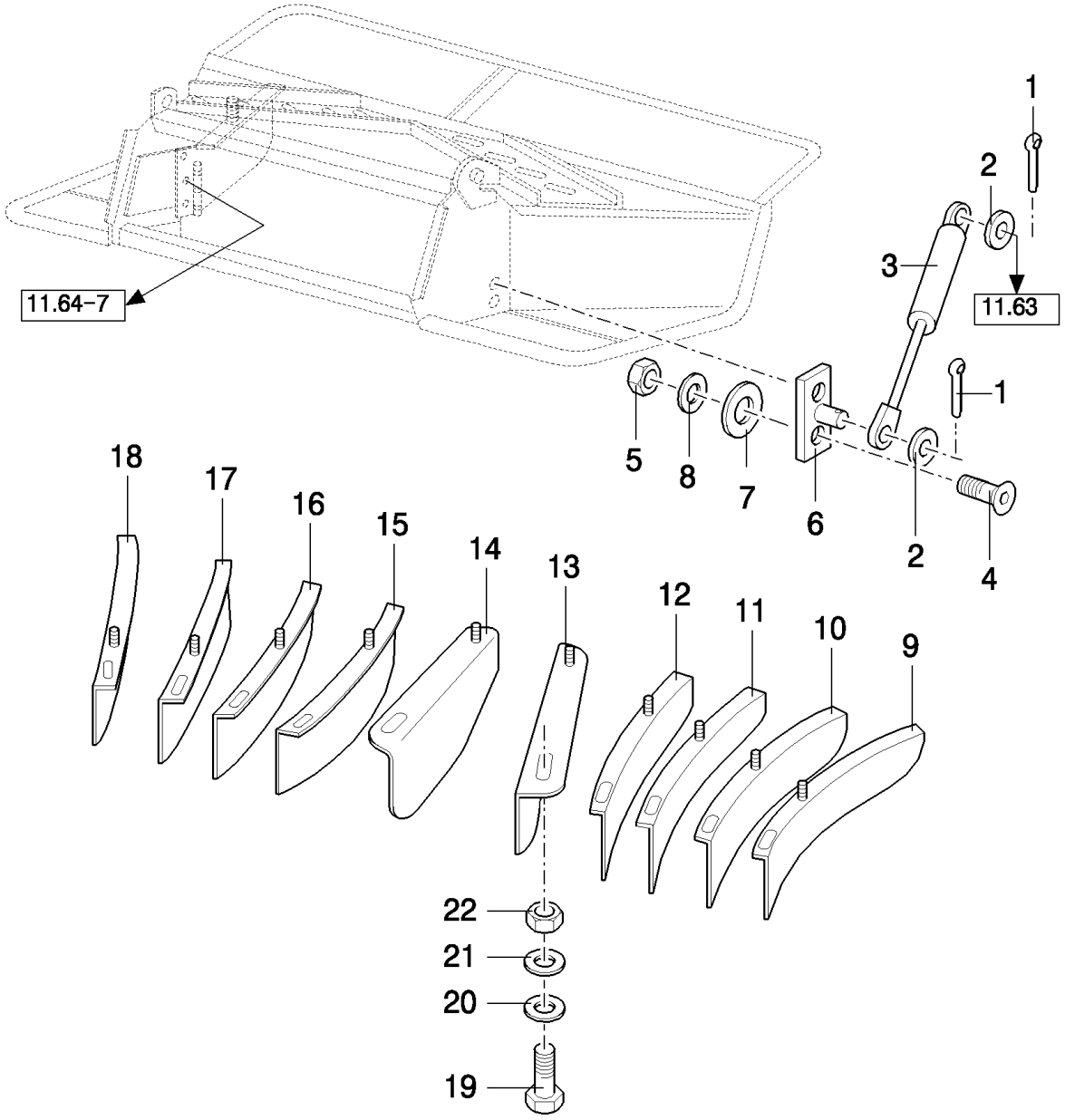

TX68 COMBINE - BASE UNIT

11.065(01) DEFLECTORS

ссылка	Номер детали	Кол-во	Описание
1	300408	2	PIN, SPLIT (COTTER), M3.2 x 14,
2	378243	2	WASHER, M8,
3	84037628	2	SHOCK ABSORBER,
4	300498	4	SCREW, Hex Soc Flat Hd, M8 x 25, 10.9, M8x25
5	89510105	4	M8
6	84037629	2	SUPPORT,
7	140016	4	WASHER, M8 x 16 x 1.6,
8	322358	4	WASHER, SPRING, Belleville, M8,
9	84037630	1	DEFLECTOR, , FOR TX66-67-68 ONLY
10	9835534	1	DEFLECTOR, , FOR TX66-67-68 ONLY
10	84037620	1	DEFLECTOR, , FOR TX62-63-64-65 ONLY
11	84037631	1	DEFLECTOR, , FOR TX66-67-68 ONLY
11	84037621	1	DEFLECTOR, , FOR TX62-63-64-65 ONLY
12	84037622	1	DEFLECTOR,
13	84037623	1	DEFLECTOR,
14	84037624	1	DEFLECTOR,
15	84037625	1	DEFLECTOR,
16	84037632	1	DEFLECTOR, , FOR TX66-67-68 ONLY
16	84037626	1	DEFLECTOR, , FOR TX62-63-64-65 ONLY
17	9835535	1	DEFLECTOR, , FOR TX66-67-68 ONLY
17	84037627	1	DEFLECTOR, , FOR TX62-63-64-65 ONLY
18	84037633	1	DEFLECTOR, , FOR TX66-67-68 ONLY
19	120104	10	SCREW, Hex, M8 x 20, 8.8,
20	140041	10	WASHER, M8 x 28 x 3,
21	746849	10	WASHER, LOCK, 8MM
22	86629542	10	NUT, LOCK, M8 x 1.25, Cl 8,

TX68 COMBINE - BASE UNIT

11.066(01) LOCKING DEVICE

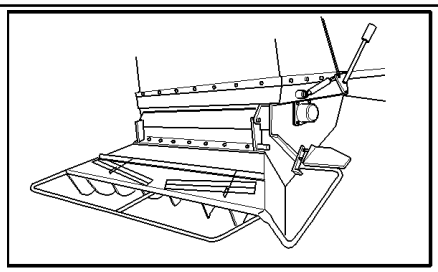

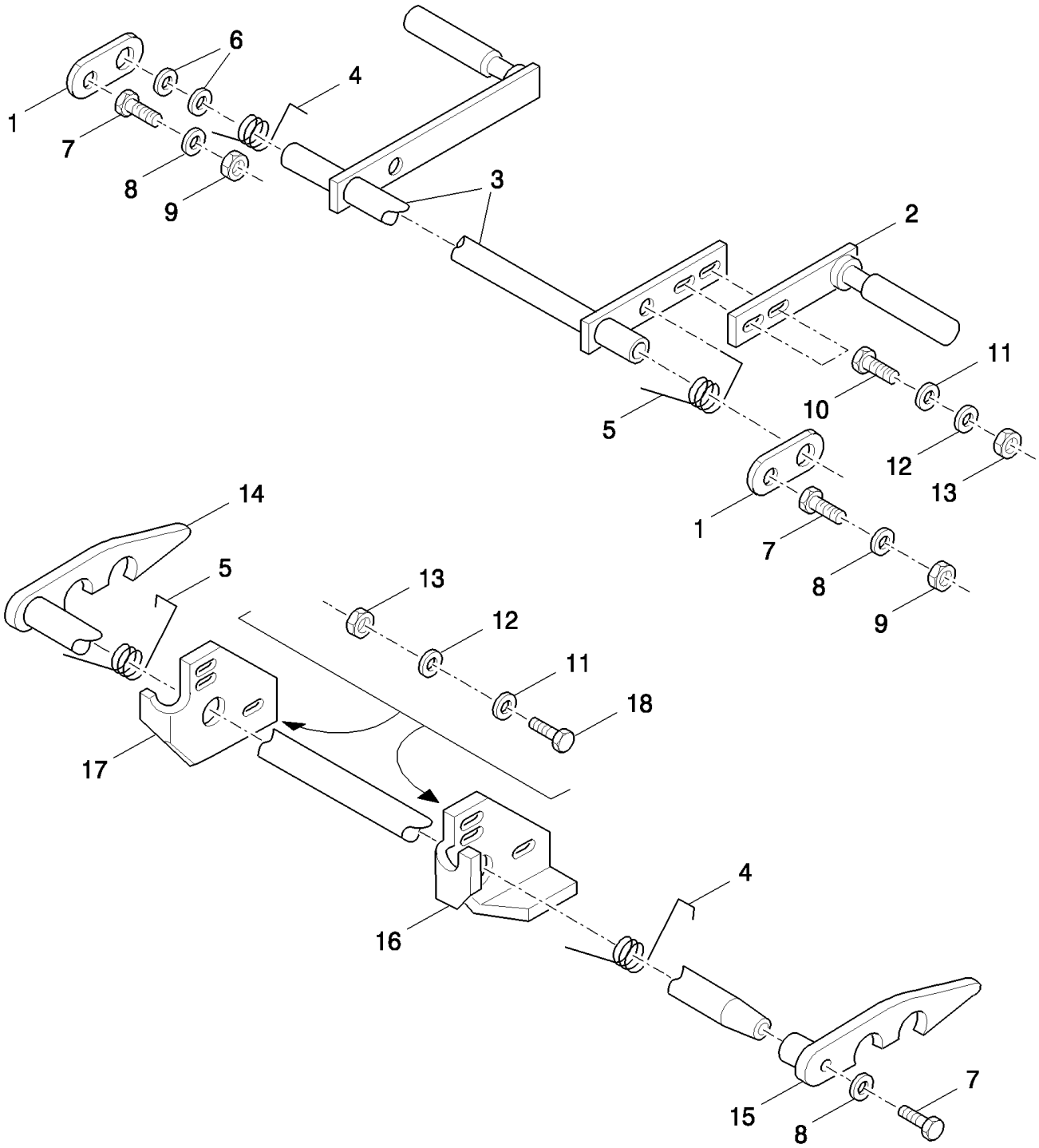

TX68 COMBINE - BASE UNIT

11.066(01) LOCKING DEVICE

ссылка	Номер детали	Кол-во	Описание
1	84037637	2	BRACKET,
2	84037638	1	LEVER,
3	84037646	1	LEVER, , FOR TX66-67-68 ONLY
3	84037639	1	LEVER, , FOR TX62-63-64-65 ONLY
4	84037640	2	SPRING,
5	84037641	2	SPRING,
6	80140100	AR	WASHER,
7	43138	3	SCREW, Hex, M10 x 20, 8.8, Full Thd,
8	140045	3	WASHER, SPRING, Belleville, M10,
9	100016	2	NUT, M10, Cl 8,
10	308761	2	BOLT, CARRIAGE, Short NK, M8 x 25, Cl8.8, Full Thd,
11	140041	6	WASHER, M8 x 28 x 3,
12	322358	6	WASHER, SPRING, Belleville, M8,
13	9706690	6	NUT, M8, Cl 8,
14	84037642	1	LEVER, , FOR TX66-67-68 ONLY
14	84037951	1	LEVER, , FOR TX62-63-64-65 ONLY
15	84037643	1	LEVER,
16	84037644	1	SUPPORT, LH
17	84037645	1	SUPPORT, RH
18	43127	4	BOLT, Hex, M8 x 25, 8.8,

TX68 COMBINE - BASE UNIT

11.067(01) DEFLECTOR PLATES

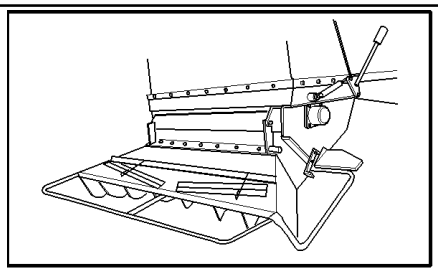

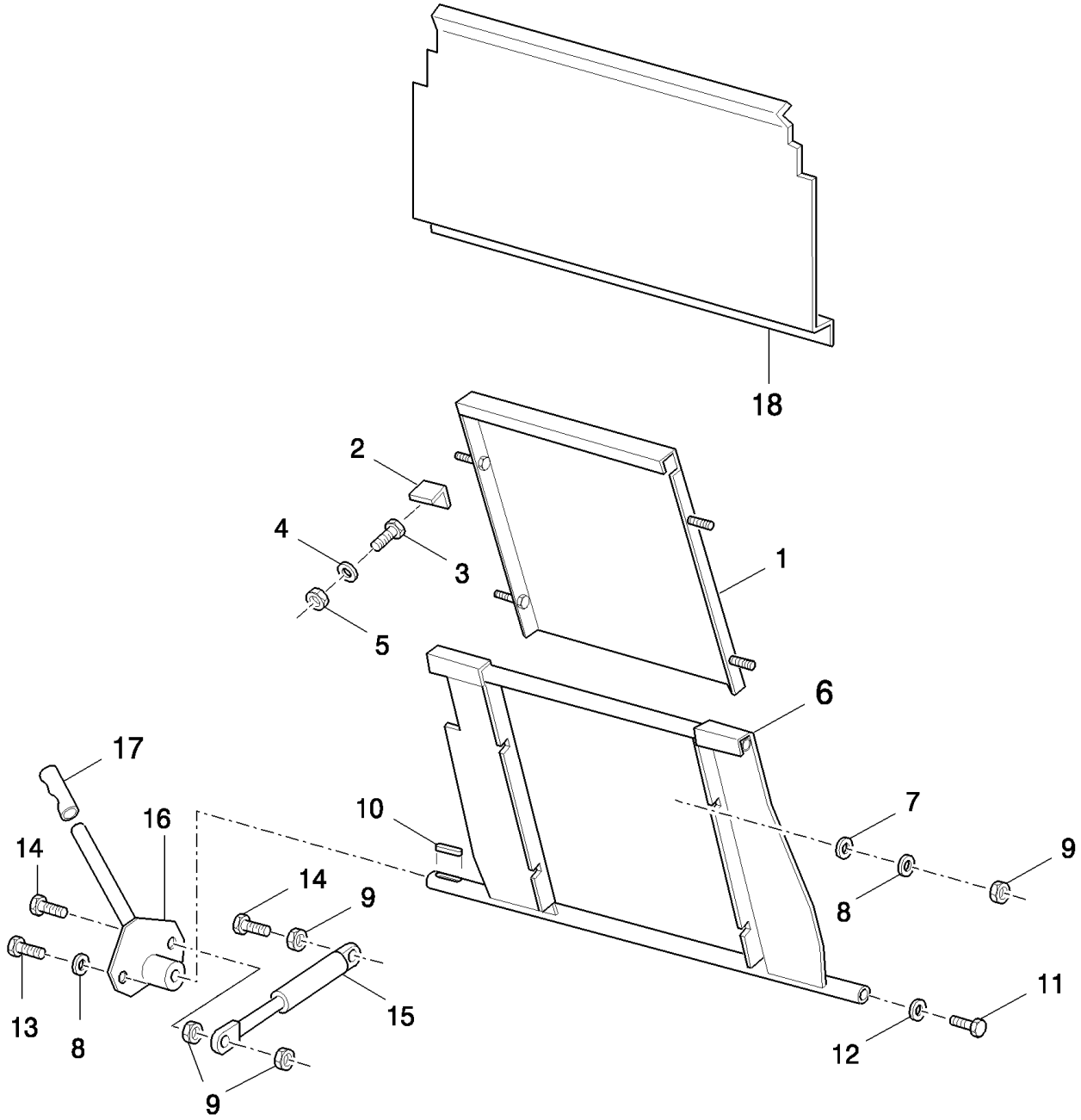

TX68 COMBINE - BASE UNIT

11.067(01) DEFLECTOR PLATES

ссылка	Номер детали	Кол-во	Описание
1	84037651	1	DEFLECTOR, , FOR TX66-67-68 ONLY
1	84037649	1	DEFLECTOR, , FOR TX62-63-64-65 ONLY
2	84005998	2	SUPPORT,
3	86585711	2	SCREW, Cross Pan Hd, M6 x 10,
4	322357	2	WASHER, SPRING, Belleville, M6,
5	15896221	2	NUT, M6, Cl 10,
6	84037652	1	DEFLECTOR, , FOR TX66-67-68 ONLY
6	84037650	1	DEFLECTOR, , FOR TX62-63-64-65 ONLY
7	140016	4	WASHER, M8 x 16 x 1.6,
8	412654	5	WASHER, LOCK,
9	395626	AR	NUT,
10	9813086	1	KEY,
11	9813089	1	SCREW,
12	140048	1	WASHER, SPRING, Belleville, M16,
13	43128	1	BOLT, Hex, M8 x 30, 8.8,
14	120106	1	BOLT, Hex, M8 x 40, 8.8, Full Thd,
15	9813097	1	GAS STRUT,
16	9811675	1	HANDLE,
17	9811674	1	HANDLE,
18	84037648	1	DEFLECTOR, , FOR TX66-67-68 ONLY
18	84037647	1	DEFLECTOR, , FOR TX62-63-64-65 ONLY

11.068(01) ELECTRICAL ADJUSTABLE DEFLECTOR KIT "BISO"

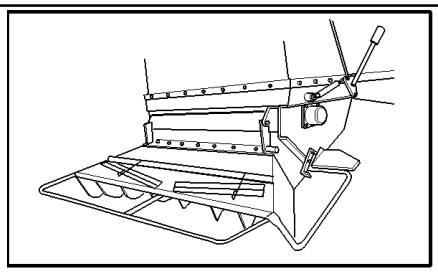

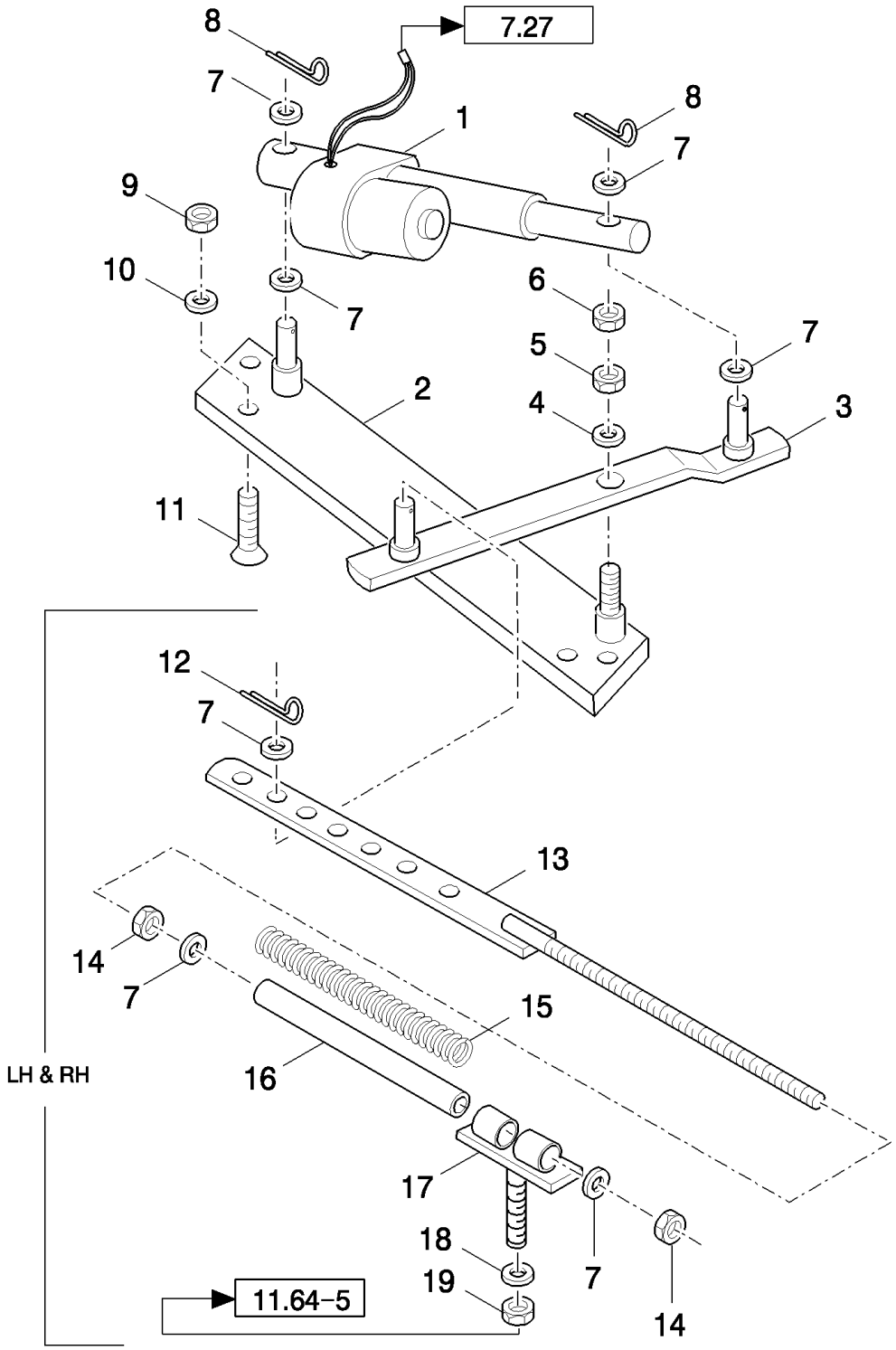

TX68 COMBINE - BASE UNIT

11.068(01) ELECTRICAL ADJUSTABLE DEFLECTOR KIT "BISO"

ссылка	Номер детали	Кол-во	Описание
1	84018921	1	ACTUATOR,
2	84019992	1	SUPPORT,
3	84019993	1	LEVER,
4	437023	1	WASHER,
5	100020	1	NUT, M16, Cl 8,
6	100095	1	NUT, Thin, M16 x 2, Cl 04,
7	378245	7	WASHER, M12, 13MM
8	130007	2	PIN, SPLIT (COTTER), M4 x 25,
9	9706690	4	NUT, M8, Cl 8,
10	322358	4	WASHER, SPRING, Belleville, M8,
11	120203	4	SCREW, Hex Flat Hd, M8 x 20, 4.8,
12	746888	1	PIN, SPLIT (COTTER),
13	84019994	2	ROD,
14	337475	2	NUT, M12, Cl 10,
15	84019995	2	SPRING,
16	84019996	2	TUBE,
17	84019997	2	CLAMP,
18	378244	2	WASHER, M10,
19	100037	2	NUT, M10 x 1.5, Cl 8,

11.069(01) ELECTRICAL ADJUSTABLE DEFLECTOR KIT "BISO"

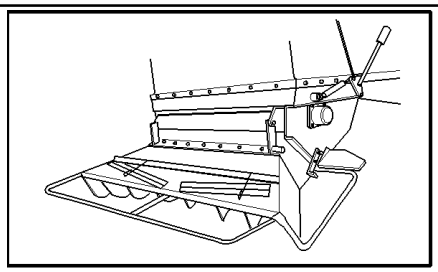

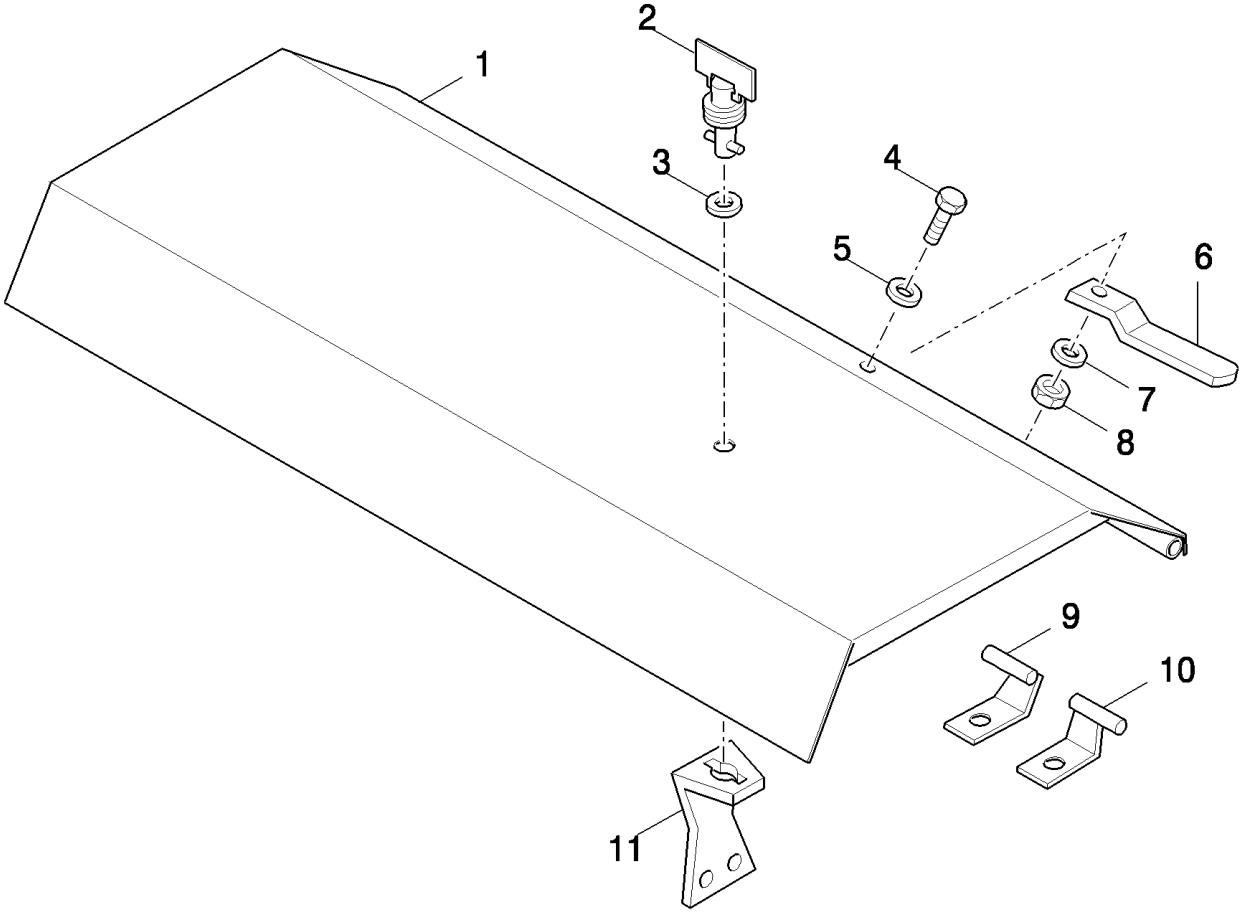

TX68 COMBINE - BASE UNIT

11.069(01) ELECTRICAL ADJUSTABLE DEFLECTOR KIT "BISO"

ссылка	Номер детали	Кол-во	Описание
1	84019987	1	SHIELD,
2	9831581	2	LOCK,
3	9514605	2	WASHER,
4	43127	1	BOLT, Hex, M8 x 25, 8.8,
5	140016	1	WASHER, M8 x 16 x 1.6,
6	84019988	1	LEVER,
7	412654	1	WASHER, LOCK, 8MM
8	86629542	1	NUT, LOCK, M8 x 1.25, Cl 8,
9	84019989	1	HINGE,
10	84019990	1	HINGE,
11	84019991	2	SUPPORT,

11.101(01) CHAFF SPREADER - UNTIL --1032999

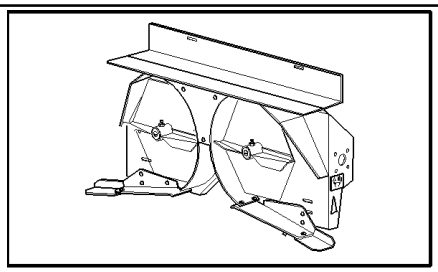

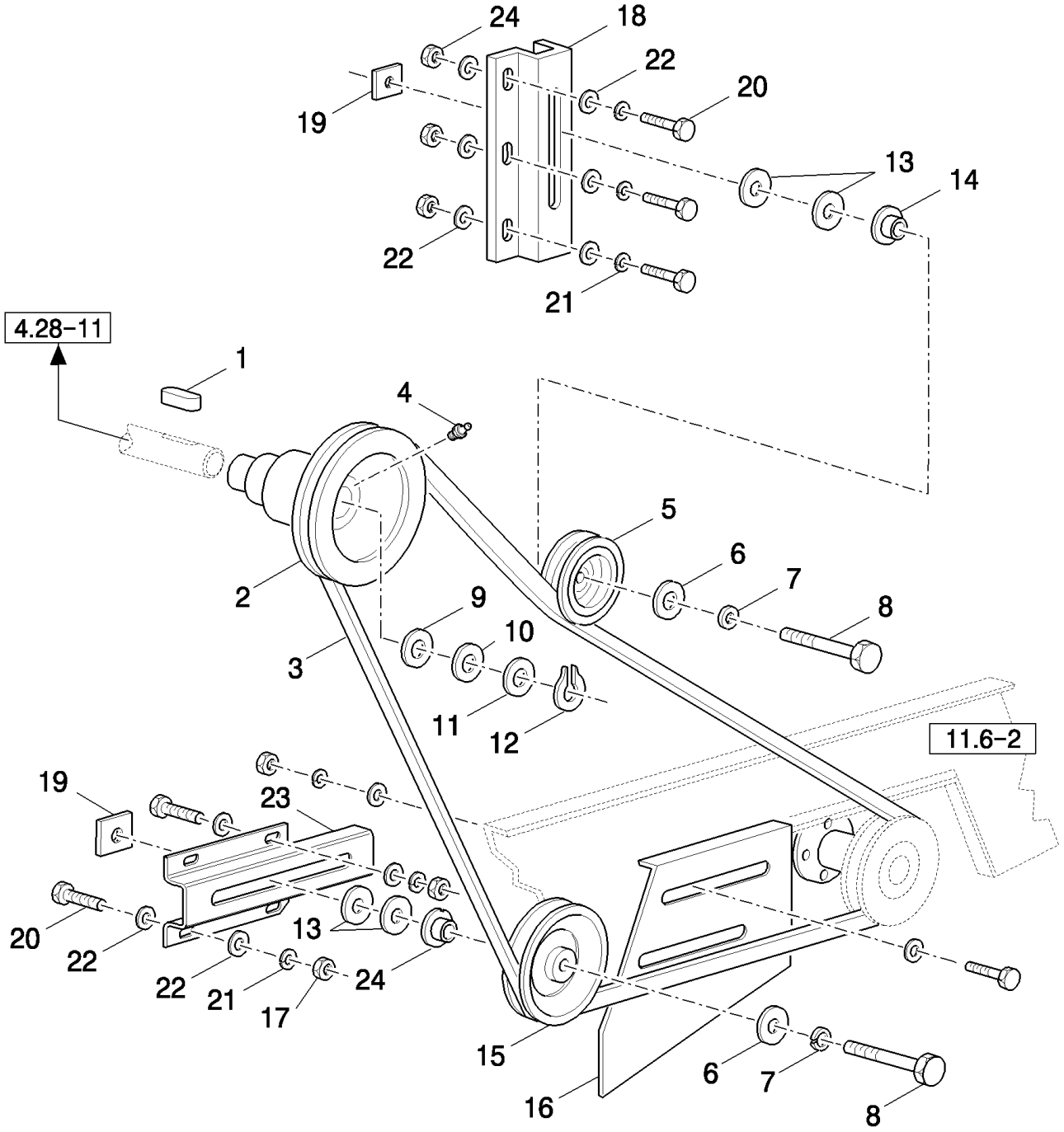

TX68 COMBINE - BASE UNIT

11.101(01) CHAFF SPREADER - UNTIL --1032999

ссылка	Номер детали	Кол-во	Описание
1	170010	1	KEY,
2	322283950	1	PULLEY,
3	340433279	1	BELT, TRANSMISSION,
4	350357851	1	NIPPLE, LUBE,
5	322280550	1	TENSIONER, BELT,
6	355501325	2	WASHER,
7	140046	2	WASHER, Belleville, M12,
8	9706693	1	BOLT, Hex, M12 x 60, 8.8,
9	322285450	AR	WASHER, THK.:0.25MM
10	322284850	AR	PLATE, ADJUSTING, THK.:0.50MM
11	322285350	AR	PLATE, ADJUSTING, THK.:1.00MM
12	370003	1	RING, SNAP, M30, Ext,
13	355511220	4	WASHER,
14	322281250	1	SPACER,
15	322280450	1	TENSIONER, BELT,
16	322281950	1	COVER,
17	9706690	7	NUT, M8, Cl 8,
18	322281750	1	SUPPORT,
19	9814327	2	NUT,
20	43127	7	BOLT, Hex, M8 x 25, 8.8,
21	322358	7	WASHER, SPRING, Belleville, M8,
22	355510820	14	WASHER,
23	322281650	1	SUPPORT,
24	322281150	1	SPACER,

11.102(01) CHAFF SPREADER - UNTIL --1032999

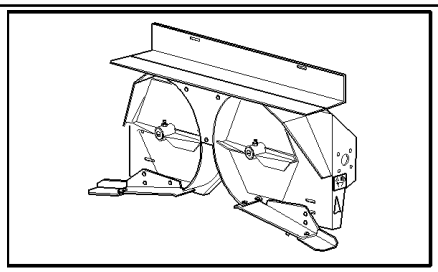

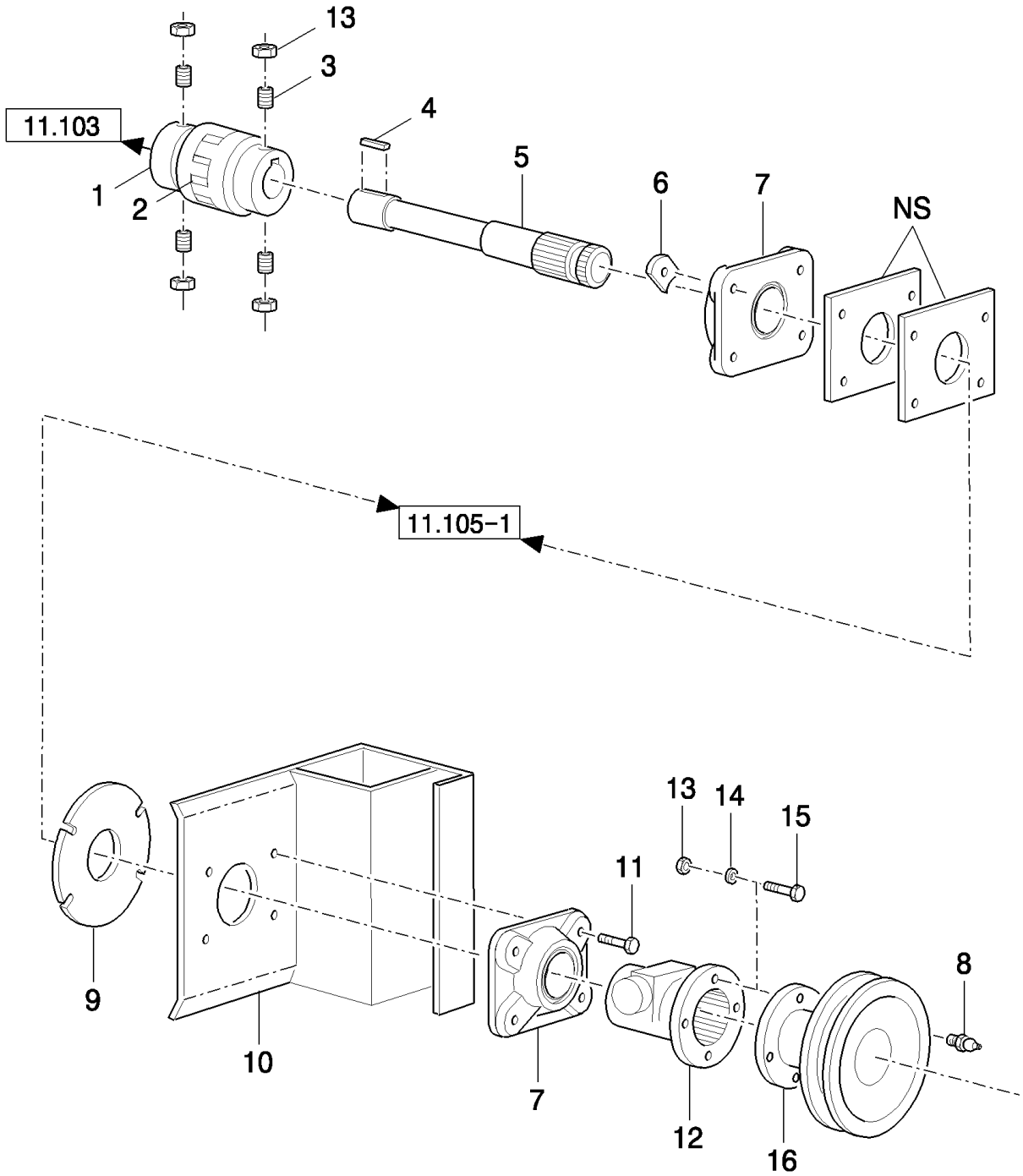

TX68 COMBINE - BASE UNIT

11.102(01) CHAFF SPREADER - UNTIL --1032999

ссылка	Номер детали	Кол-во	Описание
1	322283600	1	COUPLING,
2	322283652	1	BLOCK, COUPLING,
3	366340814	4	SCREW,
4	170005	2	KEY,
5	322282350	1	SHAFT, , FOR TX66-67-68 ONLY
5	322298250	1	SHAFT, , FOR TX62-64-65 ONLY
6	322284950	4	NUT,
7	340411115	2	SUPPORT,
8	350357803	1	NIPPLE, LUBE,
9	322282850	1	DISC,
10	322282650	1	SUPPORT, , FOR TX66-67-68 ONLY
10	322298350	1	SUPPORT, , FOR TX62-64-65 ONLY
11	120122	4	BOLT, Hex, M12 x 50, 8.8, Full Thd,
12	322282450	1	FLANGE,
13	9706690	4	NUT, M8, Cl 8,
14	322358	4	WASHER, SPRING, Belleville, M8,
15	43127	4	BOLT, Hex, M8 x 25, 8.8,
16	322280650	1	PULLEY,

11.103(01) CHAFF SPREADER - UNTIL --1032999

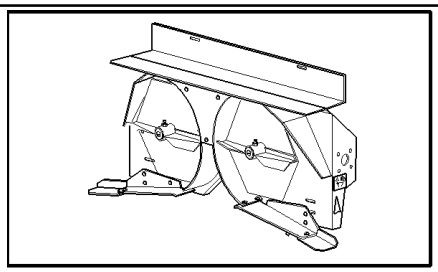

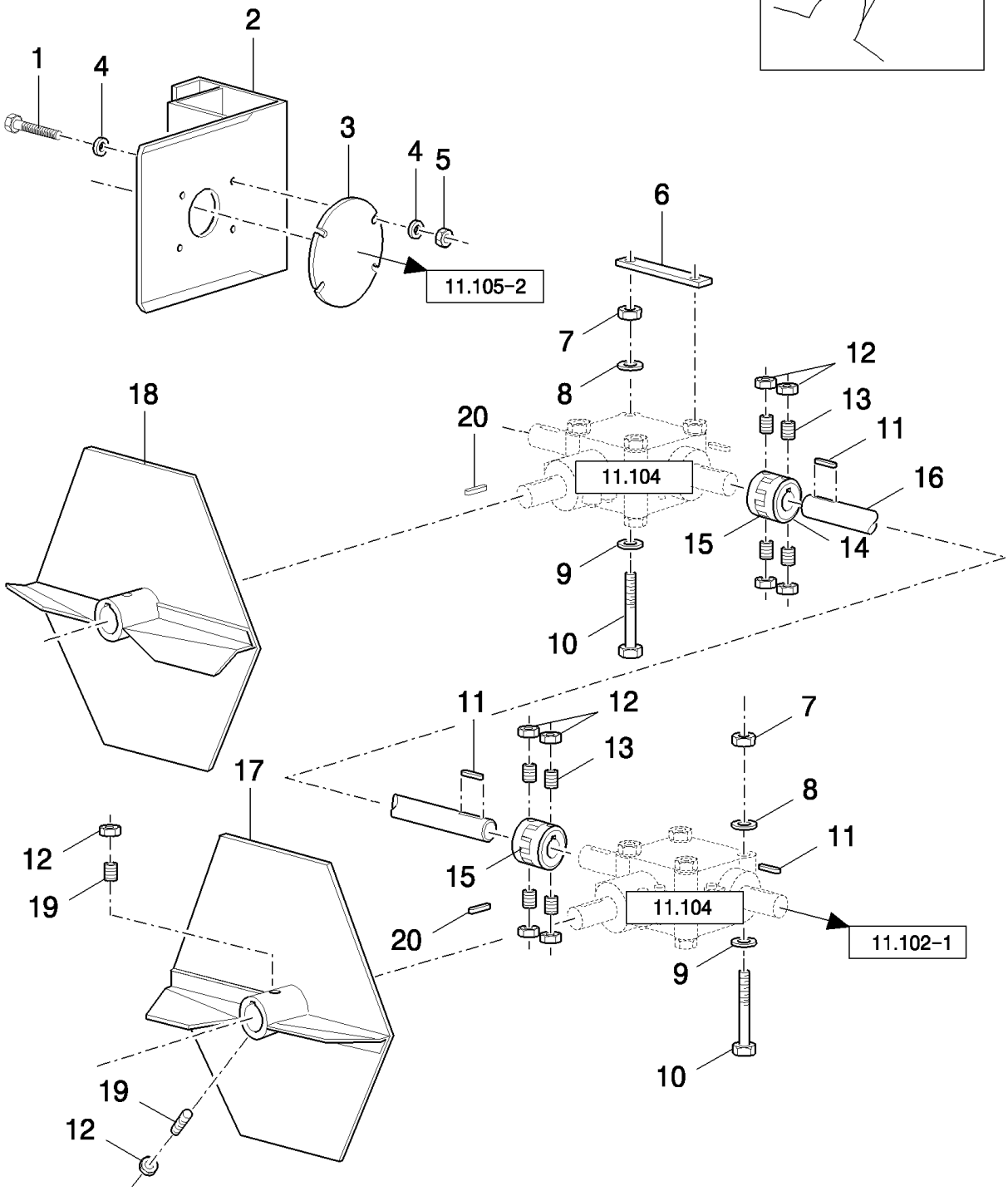

TX68 COMBINE - BASE UNIT

11.103(01) CHAFF SPREADER - UNTIL --1032999

ссылка	Номер детали	Кол-во	Описание
1	11106231	4	BOLT, Hex, M10 x 25, 10.9, Full Thd,
2	322282650	1	SUPPORT, , FOR TX66-67-68 ONLY
2	322298350	1	SUPPORT, , FOR TX62-64-65 ONLY
3	322285250	1	DISC,
4	355511030	4	WASHER,
5	100037	4	NUT, M10 x 1.5, Cl 8,
6	322284650	AR	SHIM, THK.:0.5MM
6	322284750	AR	SHIM, THK.:1MM
7	100016	8	NUT, M10, Cl 8,
8	140045	8	WASHER, SPRING, Belleville, M10,
9	355501120	8	WASHER,
10	120118	8	BOLT, Hex, M10 x 120, 8.8, Full Thd,
11	170005	4	KEY,
12	100097	12	NUT, Thin, M8 x 1.25, Cl 04,
13	366340816	8	SCREW,
14	322283700	2	ELASTIC JOINT,
15	9815327	2	CONNECTOR, HYD., A=8MM
15	322283652	2	BLOCK, COUPLING, A=11MM
16	322282150	1	SHAFT, IDLE, , FOR TX66-67-68 ONLY
16	322297750	1	SHAFT, IDLE, , FOR TX62-64-65 ONLY
17	322281050	1	ROTOR,
18	322280950	1	ROTOR,
19	366340814	4	SCREW,
20	170008	2	KEY,

11.104(01) GEARBOX - UNTIL --1032999

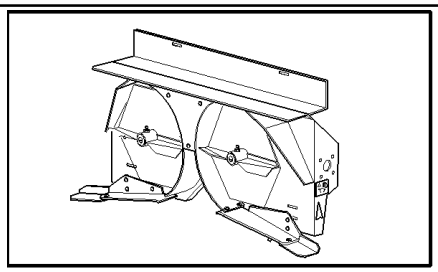

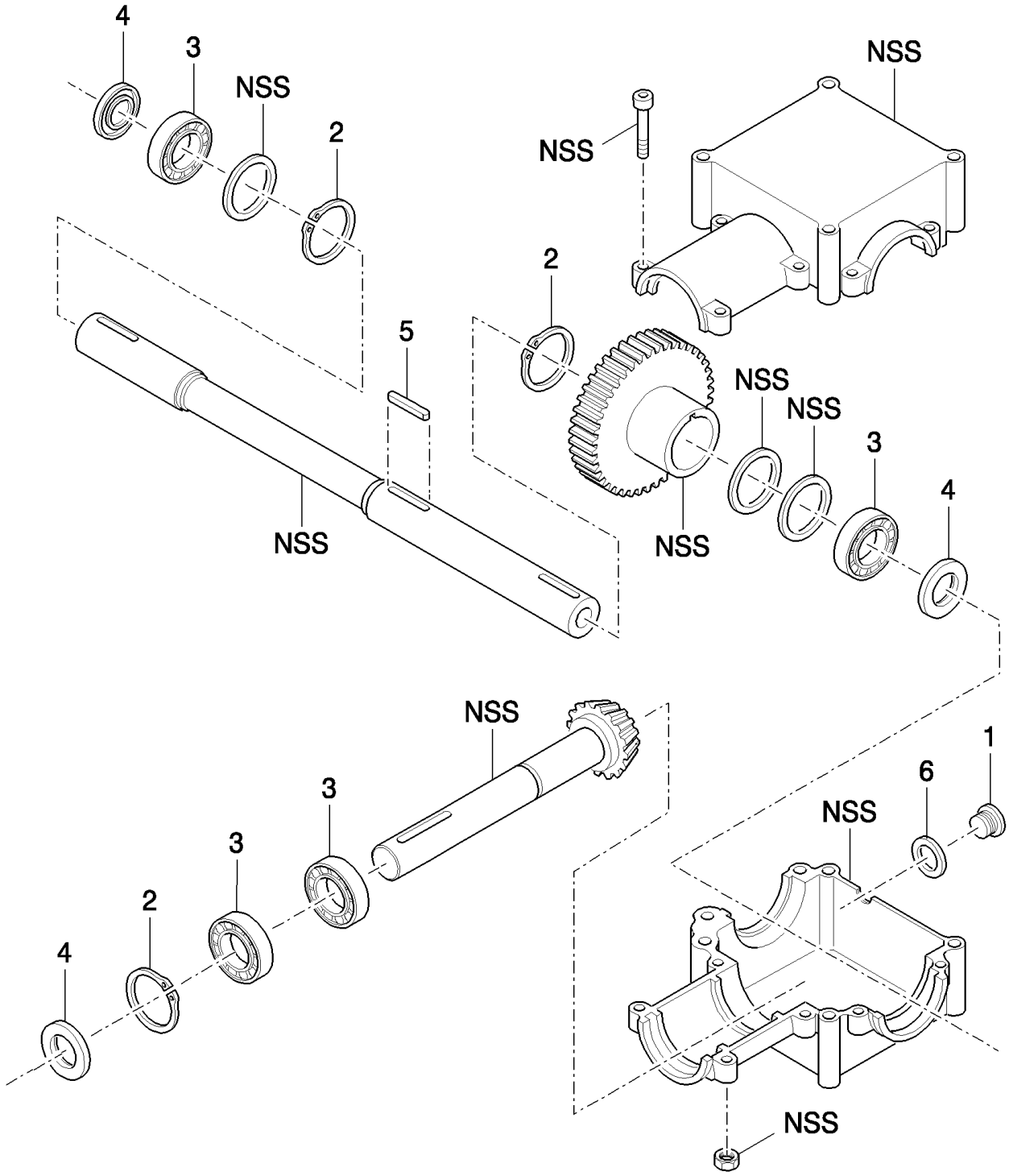

TX68 COMBINE - BASE UNIT

11.104(01) GEARBOX - UNTIL --1032999

ссылка	Номер детали	Кол-во	Описание
	322282000	2	GEARBOX, (1 to 6)
1	271956	1	PLUG,
2	370002	3	RING, SNAP, M25, Ext,
3	210041	4	BEARING, BALL,
4	9510101	3	GASKET, DIA.:47
4	300893	3	SEALRING, DIA.:35
5	749557	1	KEY,
6	9617873	1	O-RING, 6-1, 90 Duro, .468" ID x .078" Thk,

11.105(01) CHAFF SPREADER - UNTIL --1032999

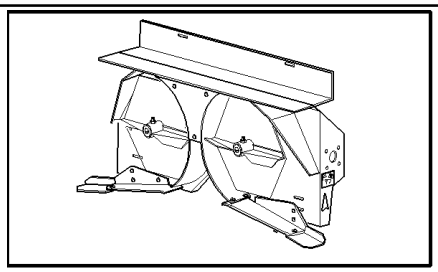

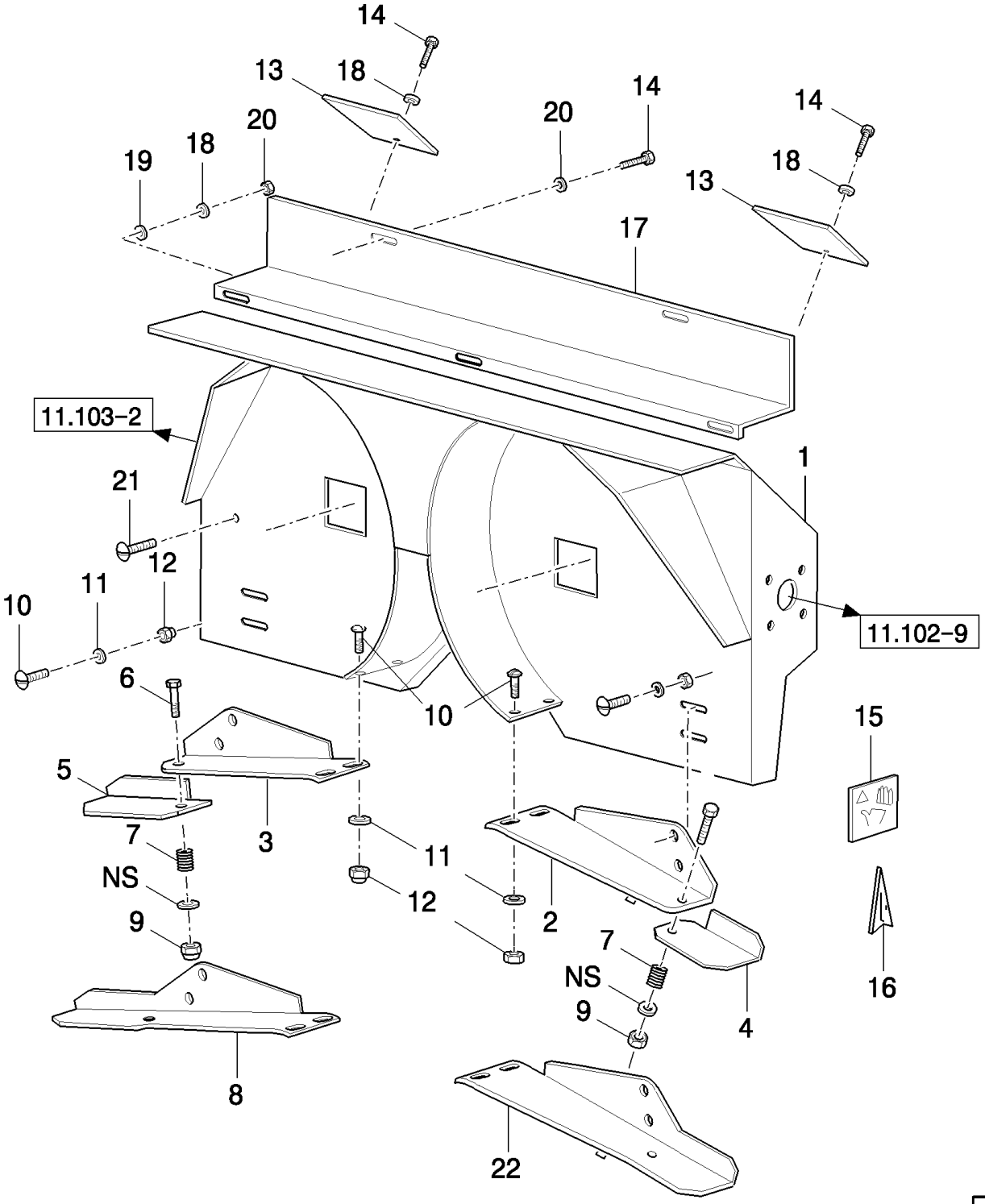

TX68 COMBINE - BASE UNIT

11.105(01) CHAFF SPREADER - UNTIL --1032999

ссылка	Номер детали	Кол-во	Описание
1	322282950	1	HOUSING, , FOR TX66-67-68 ONLY
1	322297850	1	HOUSING, , FOR TX62-64-65 ONLY
2	322284350	1	DEFLECTOR,
3	322284450	1	DEFLECTOR,
4	322284250	1	DEFLECTOR,
5	322284150	1	DEFLECTOR,
6	120102	2	SCREW, Hex, M6 x 40, 8.8, Full Thd,
7	353561165	2	SPRING,
8	322352250	1	SHUNTER,
9	353308	8	NUT, M6 x 1, Cl 8,
10	86511830	5	SCREW, Cross Pan Hd, M6 x 20,
11	355510820	7	WASHER,
12	86629542	23	NUT, LOCK, M8 x 1.25, Cl 8,
13	322281850	2	LID,
15	322205350	2	DECAL,
16	340478319	4	DECAL,
17	322283850	1	SHIELD, , FOR TX66-67-68 ONLY
17	322297950	1	SHIELD, , FOR TX62-64-65 ONLY
18	322358	13	WASHER, SPRING, Belleville, M8,
19	355500915	5	WASHER,
20	9706690	5	NUT, M8, Cl 8,
21	V44317	3	SCREW,
22	322352350	1	SHUNTER,
14	16043224	2	BOLT, Hex, M8 x 16, 8.8, Full Thd,

11.106(01) CHAFF SPREADER - UNTIL --1032999

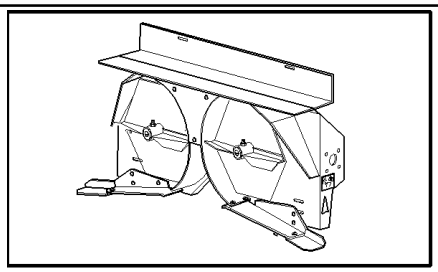

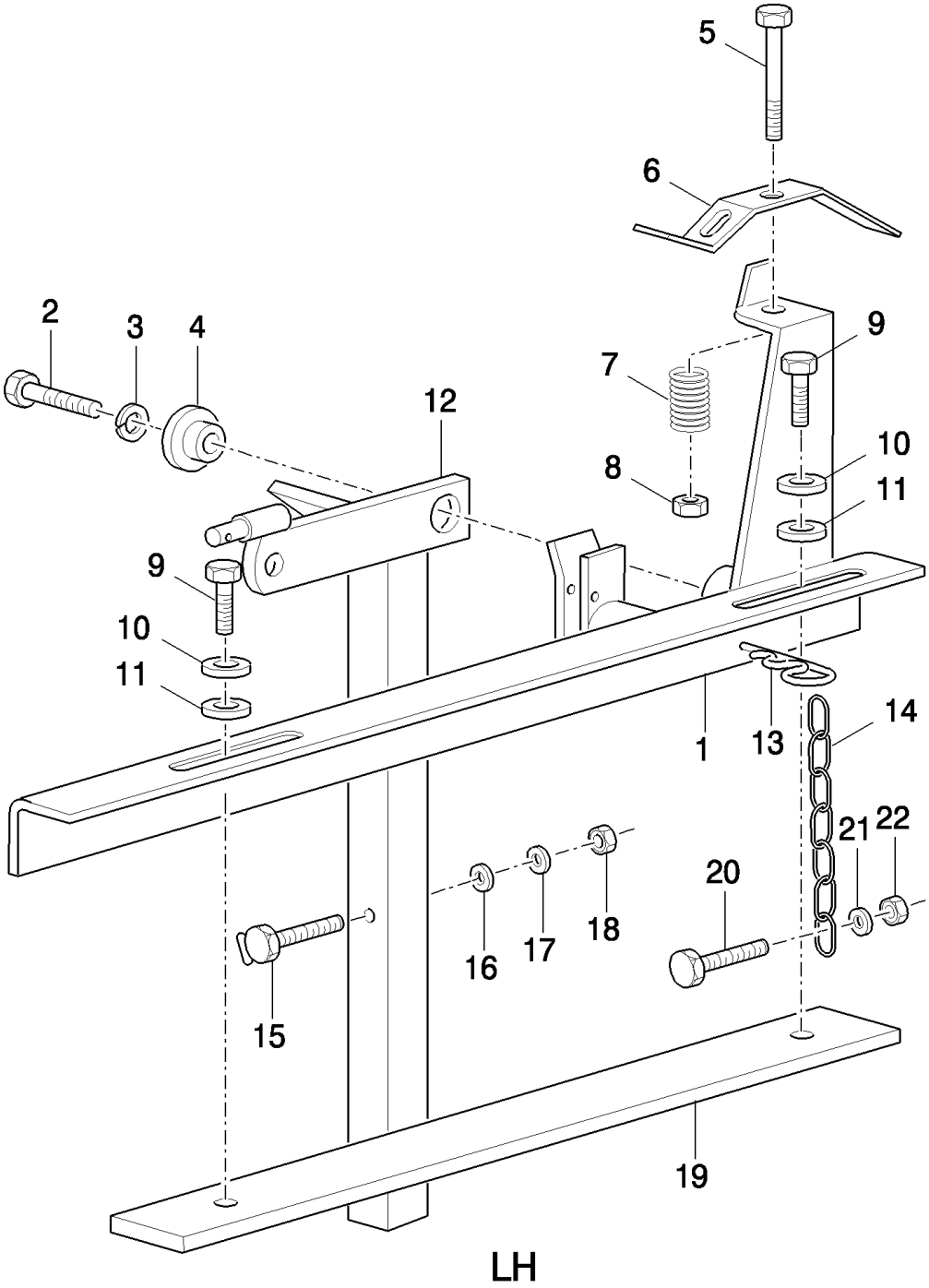

TX68 COMBINE - BASE UNIT

11.106(01) CHAFF SPREADER - UNTIL --1032999

ссылка	Номер детали	Кол-во	Описание
1	322283250	1	SUPPORT,
2	43168	1	BOLT, Hex, M16 x 40, 8.8,
3	140048	1	WASHER, SPRING, Belleville, M16,
4	322268450	1	BUSHING,
5	120122	1	BOLT, Hex, M12 x 50, 8.8, Full Thd,
6	322283350	1	SUPPORT,
7	353561162	1	SPRING,
8	100038	1	NUT, M12 x 1.75, Cl 8,
9	43140	2	BOLT, Hex, M10 x 30, 8.8, Full Thd,
10	140045	2	WASHER, SPRING, Belleville, M10,
11	355511030	2	WASHER,
12	322283150	1	HANDLE,
13	746888	1	PIN, SPLIT (COTTER),
14	322285050	1	CHAIN,
15	322283450	1	BOLT,
16	355501330	1	WASHER,
17	140046	1	WASHER, Belleville, M12,
18	337475	1	NUT, M12, Cl 10,
19	322282750	1	PLATE, COVER,
20	120100	2	BOLT, Hex, M6 x 20, 8.8,
21	355510615	2	WASHER,
22	353308	2	NUT, M6 x 1, Cl 8,

11.107(01) CHAFF SPREADER - UNTIL --1032999

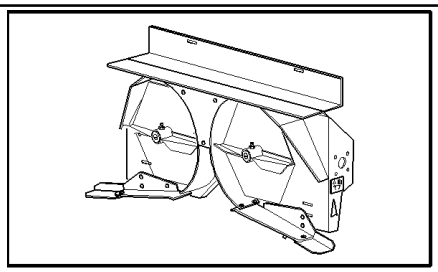

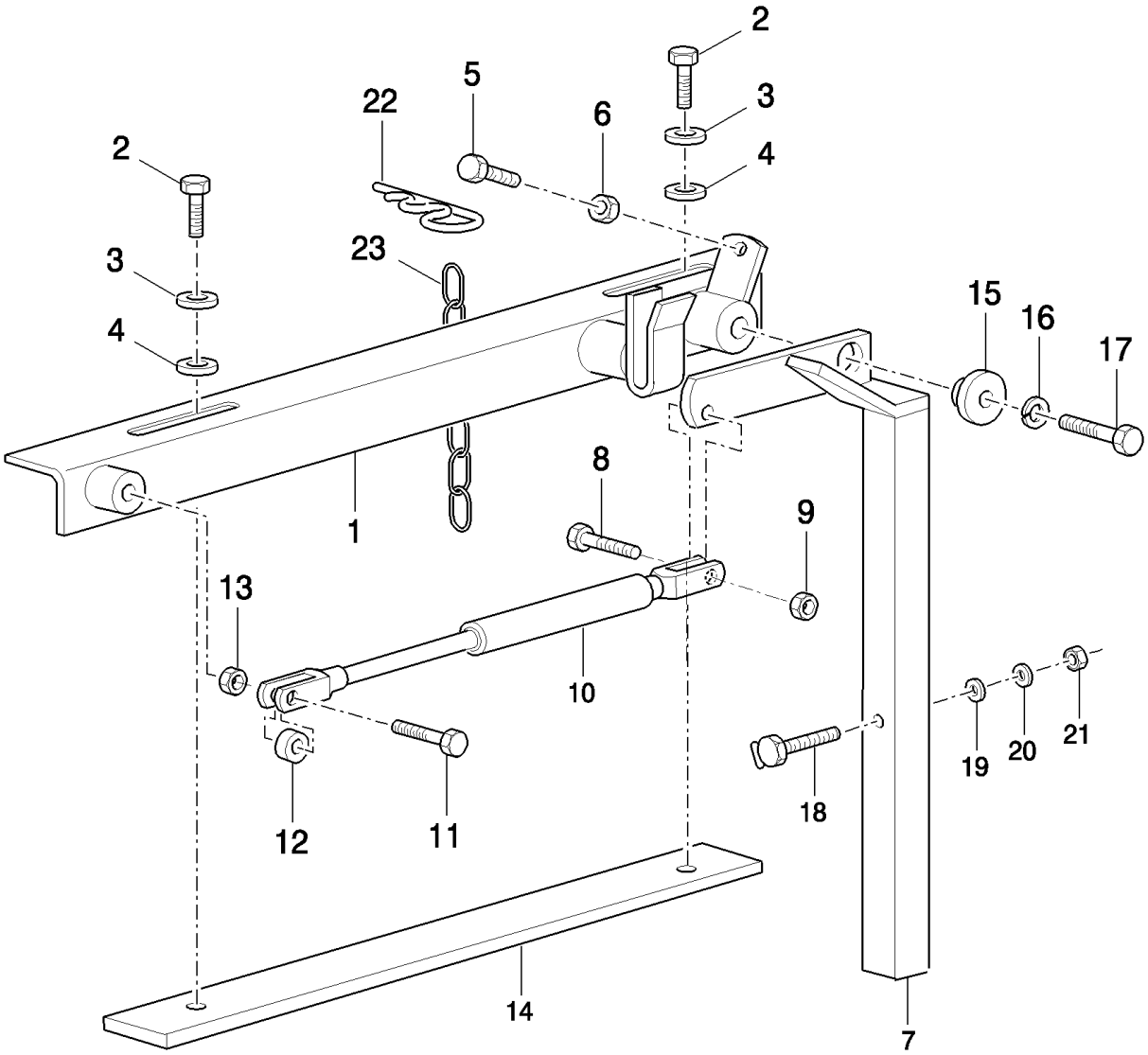

RH

TX68 COMBINE - BASE UNIT

11.107(01) CHAFF SPREADER - UNTIL --1032999

ссылка	Номер детали	Кол-во	Описание
1	322282250	1	SUPPORT,
2	43140	2	BOLT, Hex, M10 x 30, 8.8, Full Thd,
3	140045	2	WASHER, SPRING, Belleville, M10,
4	355511030	2	WASHER,
5	120112	1	BOLT, Hex, M10 x 40, 8.8, Full Thd,
6	100016	1	NUT, M10, Cl 8,
7	322283050	1	HANDLE,
8	120201	1	BOLT, Hex, M10 x 35, 8.8, Full Thd,
9	100037	1	NUT, M10 x 1.5, Cl 8,
10	322284500	1	SHOCK ABSORBER,
11	300385	1	SCREW,
12	322284050	1	SPACER,
13	354720	1	NUT, Thin, M10 x 1.5, Cl 04,
14	322282750	1	PLATE, COVER,
15	322268450	1	BUSHING,
16	140048	1	WASHER, SPRING, Belleville, M16,
17	43168	1	BOLT, Hex, M16 x 40, 8.8,
18	322283450	1	BOLT,
19	355501330	1	WASHER,
20	140046	1	WASHER, Belleville, M12,
21	337475	1	NUT, M12, Cl 10,
22	746888	1	PIN, SPLIT (COTTER),
23	322285050	1	CHAIN,

TX68 COMBINE - BASE UNIT

11.108(01) CHAFF SPREADER - UNTIL --1032999

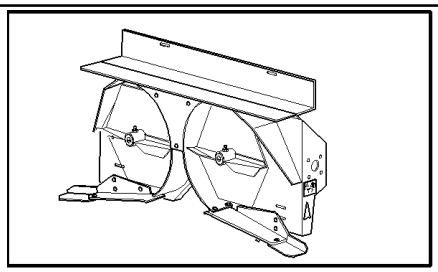

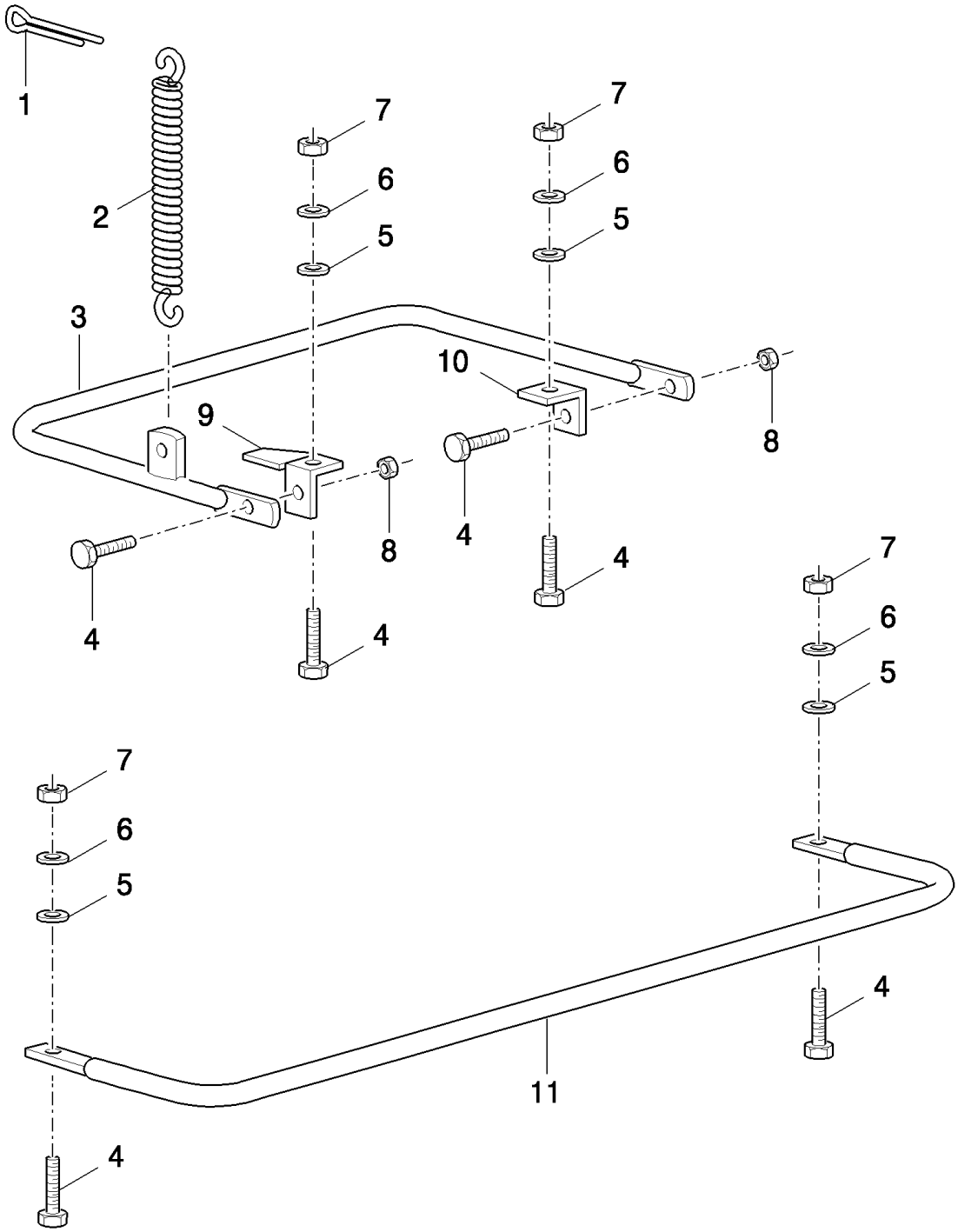

TX68 COMBINE - BASE UNIT

11.108(01) CHAFF SPREADER - UNTIL --1032999

ссылка	Номер детали	Кол-во	Описание
1	130007	1	PIN, SPLIT (COTTER), M4 x 25,
2	350356538	1	SPRING,
3	322281550	1	BAR PLATE,
4	120104	6	SCREW, Hex, M8 x 20, 8.8,
5	355500915	4	WASHER,
6	322358	4	WASHER, SPRING, Belleville, M8,
7	9706690	4	NUT, M8, Cl 8,
8	86629542	2	NUT, LOCK, M8 x 1.25, Cl 8,
9	322280750	1	ANGLE BAR,
10	322280850	1	ANGLE BAR,
11	322281450	1	BAR PLATE,

11.111(01) CHAFF SPREADER - FROM --1033001

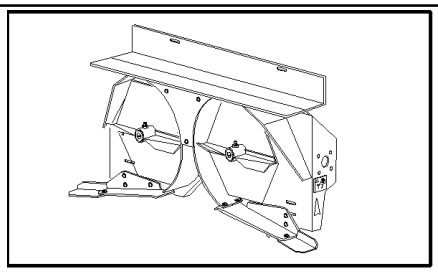

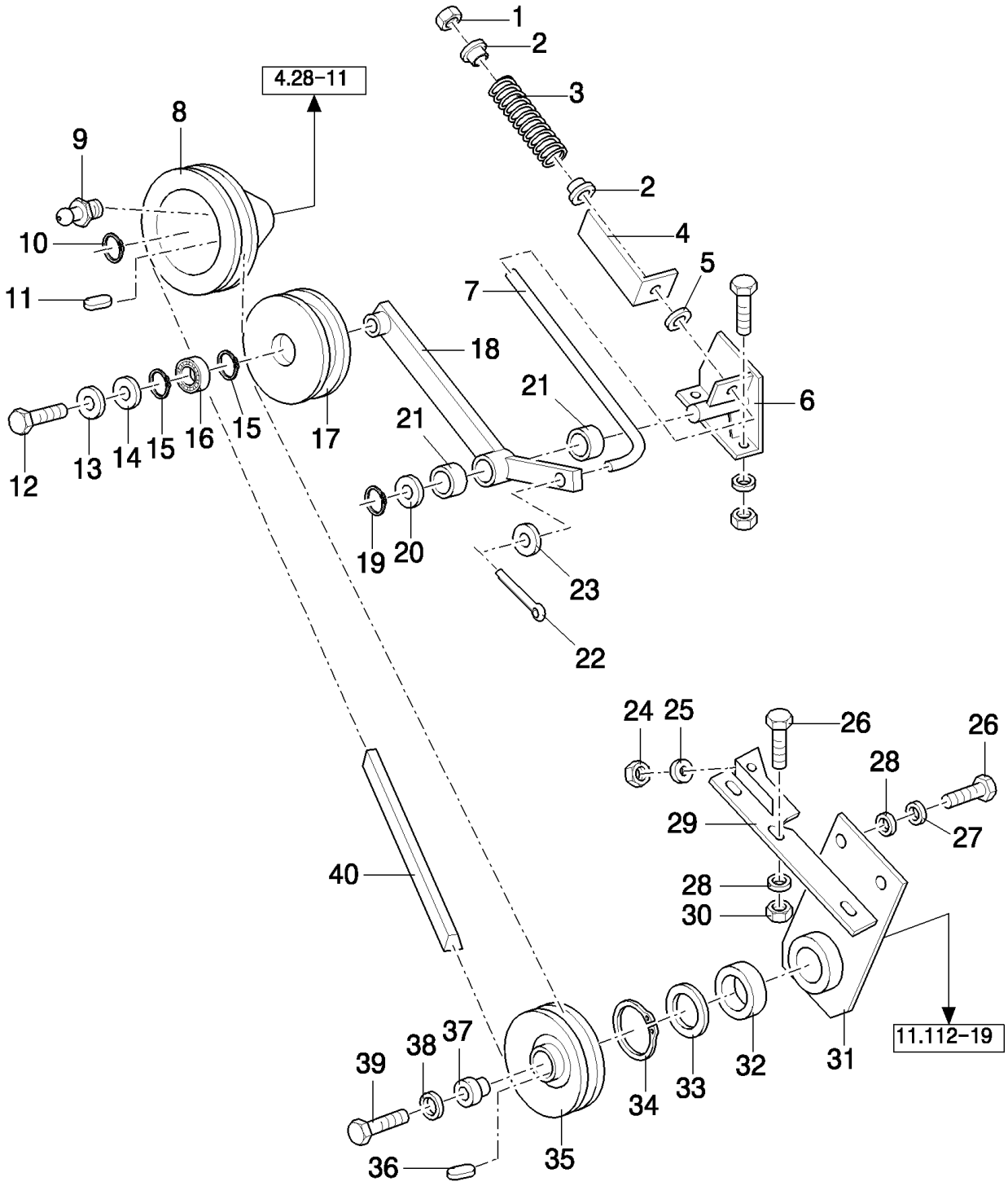

TX68 COMBINE - BASE UNIT

11.111(01) CHAFF SPREADER - FROM --1033001

ссылка	Номер детали	Кол-во	Описание
1	100038	1	NUT, M12 x 1.75, Cl 8,
2	84043648	2	BUSHING,
3	84056167	1	SPRING,
4	84056164	1	INDICATOR,
5	84043655	1	WASHER,
6	84056161	1	BRACKET,
7	84056165	1	SCREW,
8	84056156	1	PULLEY,
9	321204	1	NIPPLE, LUBE, M6 x 1, 16mm lg,
10	370003	1	RING, SNAP, M30, Ext,
11	170010	1	KEY,
12	9706687	1	SCREW, Hex, M12 x 30, 8.8,
13	84019576	1	WASHER, 12MM
14	84056166	1	WASHER, 13MM
15	370011	2	RING, SNAP, M52, Int,
16	443898	1	BEARING, BALL,
17	84056790	1	PULLEY,
18	84056789	1	ARM,
19	370002	1	RING, SNAP, M25, Ext,
20	84056142	1	SHIM,
21	84056148	2	BUSHING,
22	130004	1	PIN, SPLIT (COTTER), M3.2 x 25,
23	140223	1	WASHER,
24	86629542	8	NUT, LOCK, M8 x 1.25, Cl 8,
25	307789	16	WASHER,
26	11106231	10	BOLT, Hex, M10 x 25, 10.9, Full Thd,
27	140045	4	WASHER, SPRING, Belleville, M10,
28	378244	16	WASHER, M10,
29	84056159	1	BRACKET,
30	100037	6	NUT, M10 x 1.5, Cl 8,
31	84056786	1	SUPPORT,
32	84056131	2	BUSHING,
33	84056138	1	SHIM,
34	300636	1	CIRCLIP, M70, Ext,
35	84056143	1	PULLEY, , -C1097
35	84056120	1	PULLEY, D=132, D1098-
35	84320219	1	PULLEY, D=118, D1098-
36	170005	1	KEY,
37	84056137	1	WASHER,
38	322358	1	WASHER, SPRING, Belleville, M8,
39	300381	1	BOLT, Hex, M8 x 35, 8.8, M8x35
40	84056168	1	BELT, TRANSMISSION,

11.112(01) CHAFF SPREADER - FROM --1033001

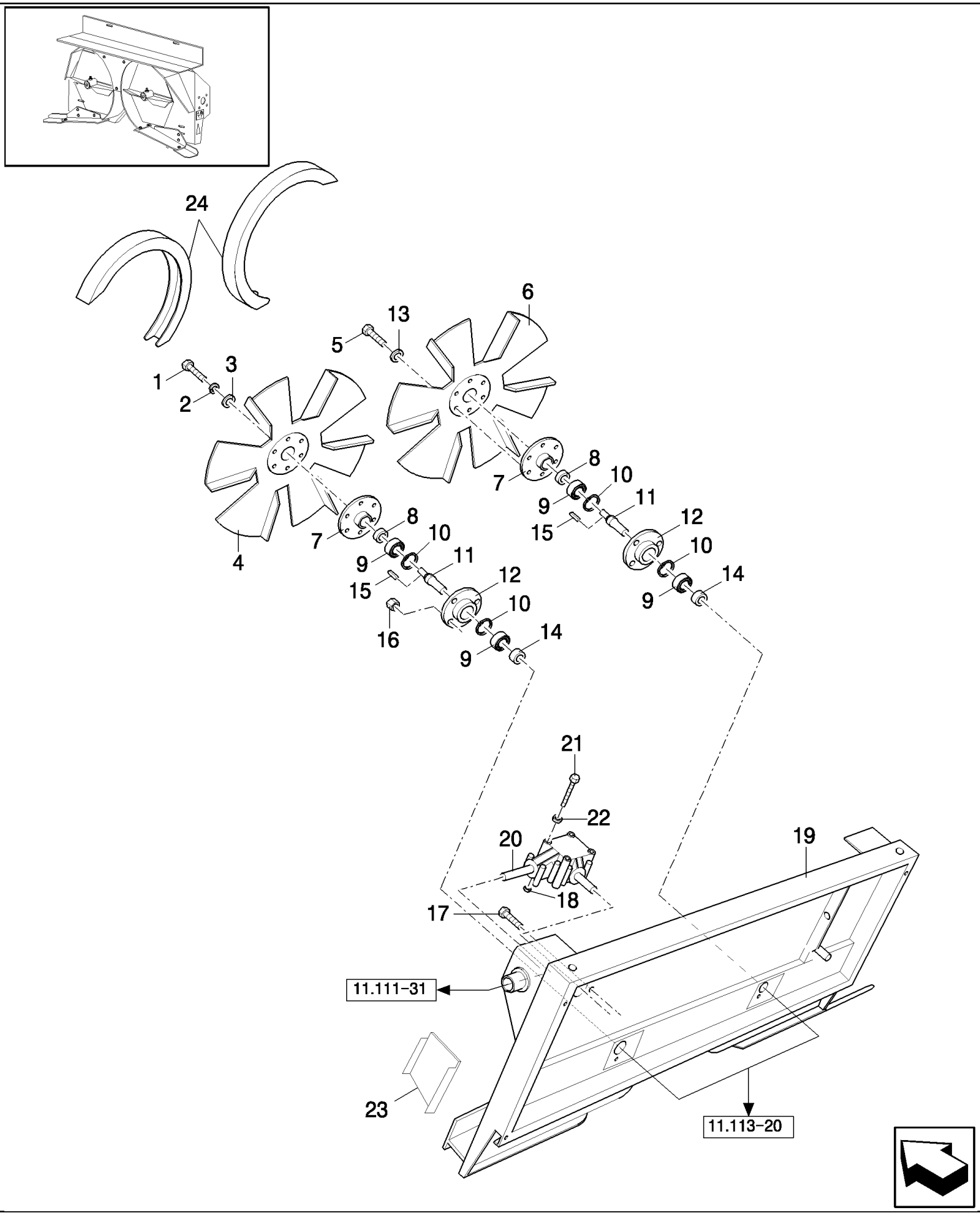

TX68 COMBINE - BASE UNIT

11.112(01) CHAFF SPREADER - FROM --1033001

ссылка	Номер детали	Кол-во	Описание
1	43140	4	BOLT, Hex, M10 x 30, 8.8, Full Thd,
2	140045	4	WASHER, SPRING, Belleville, M10,
3	84056152	2	WASHER,
4	84056145	1	ROTOR,
6	84056146	1	ROTOR,
7	84056121	2	HUB,
8	84056133	2	SPACER,
9	443898	4	BEARING, BALL,
10	370011	4	RING, SNAP, M52, Int,
11	84056123	2	SHAFT,
12	84056122	2	HUB,
13	322358	12	WASHER, SPRING, Belleville, M8,
14	84056129	2	SPACER,
15	84056144	2	KEY,
16	86629542	6	NUT, LOCK, M8 x 1.25, Cl 8,
17	336199	2	BOLT, Hex, M8 x 12, 8.8, Full Thd,
18	84019584	4	NUT,
19	84056113	1	HOUSING, , FOR TX62-63-64-65 ONLY
19	84056114	1	HOUSING, , FOR TX66-67-68 ONLY
20	84056139	1	GEARBOX,
21	120118	4	BOLT, Hex, M10 x 120, 8.8, Full Thd,
22	378244	4	WASHER, M10,
23	84429311	1	PLATE, LH
23	84429312	1	PLATE, RH
24	84429310	1	PLATE, COVER,
5	16043224	12	BOLT, Hex, M8 x 16, 8.8, Full Thd,

11.113(01) CHAFF SPREADER - FROM --1033001

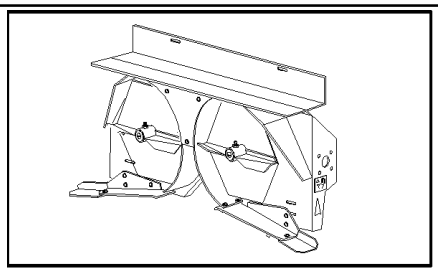

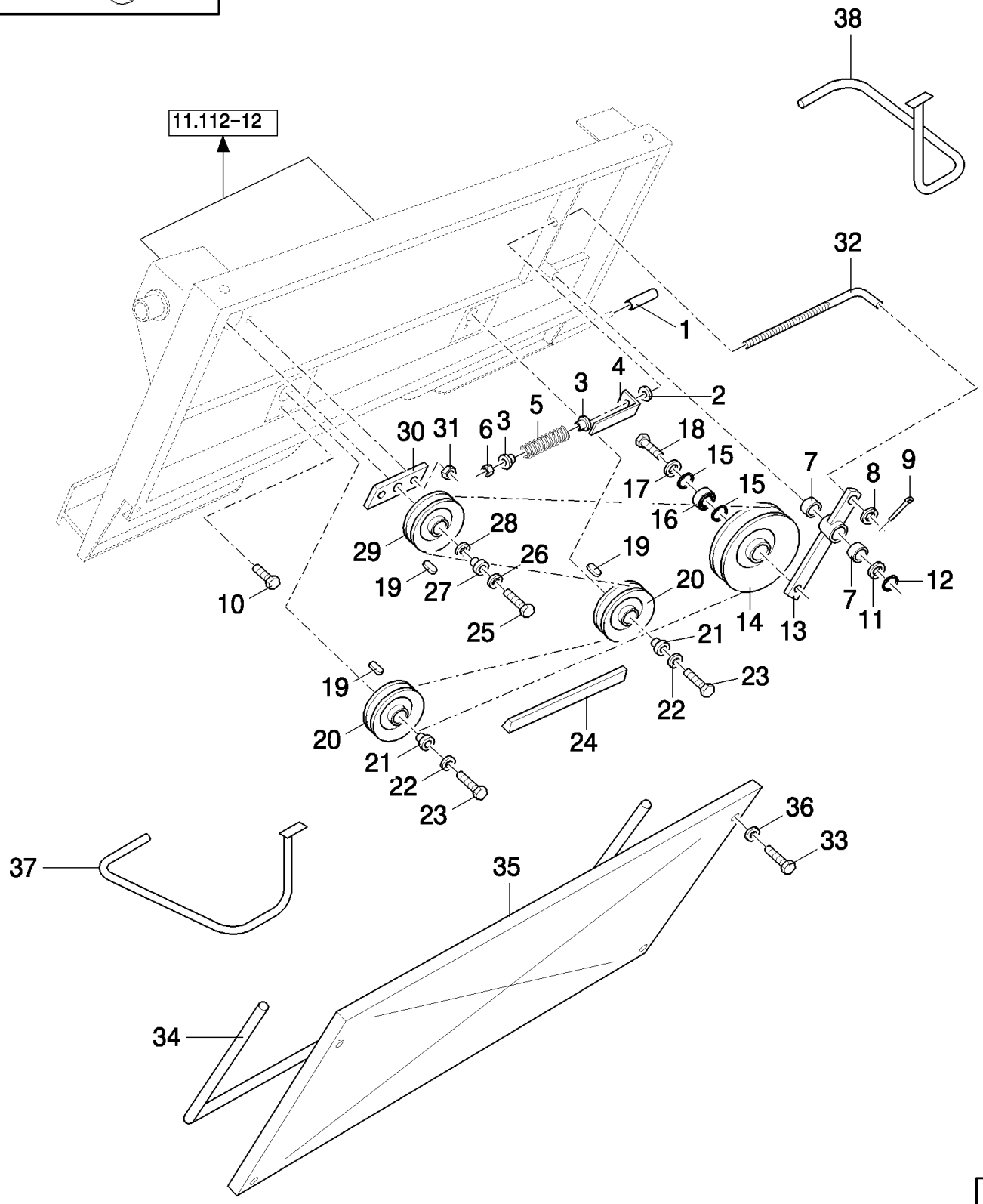

TX68 COMBINE - BASE UNIT

11.113(01) CHAFF SPREADER - FROM --1033001

ссылка	Номер детали	Кол-во	Описание
1	84056140	1	HANDLE, CRANKED,
2	84043655	1	WASHER,
3	84056155	2	BUSHING,
4	84056132	1	INDICATOR,
5	320998550	1	SPRING,
6	100038	1	NUT, M12 x 1.75, Cl 8,
7	84056148	2	BUSHING,
8	140223	1	WASHER, 12MM
9	130004	1	PIN, SPLIT (COTTER), M3.2 x 25,
10	43127	6	BOLT, Hex, M8 x 25, 8.8,
11	84056142	1	SHIM,
12	370002	1	RING, SNAP, M25, Ext,
13	84056787	1	ARM,
14	84056124	1	PULLEY,
15	370011	2	RING, SNAP, M52, Int,
16	443898	1	BEARING, BALL,
17	84056154	1	WASHER,
18	9837786	1	SCREW, Hex Soc Hd, M12 x 20, 8.8, M12x20
19	170005	3	KEY,
20	84056143	2	PULLEY, , -C1097
20	84074791	2	PULLEY, , D1098-
21	84056153	2	WASHER,
22	140045	2	WASHER, SPRING, Belleville, M10,
23	43140	2	BOLT, Hex, M10 x 30, 8.8, Full Thd,
24	84056149	1	BELT, TRANSMISSION, , FOR TX62-63-64-65 ONLY
24	84056150	1	BELT, TRANSMISSION, , FOR TX66-67-68 ONLY
25	300381	1	BOLT, Hex, M8 x 35, 8.8, M8x35
26	322358	1	WASHER, SPRING, Belleville, M8,
27	84056137	1	WASHER,
28	84056134	1	CIRCLIP,
29	84056120	1	PULLEY, D=132
29	84074790	1	PULLEY, D=118
30	84056128	1	PLATE,
31	86629542	1	NUT, LOCK, M8 x 1.25, Cl 8,
32	84056165	1	SCREW,
33	43127	1	BOLT, Hex, M8 x 25, 8.8,
34	84056117	1	SEAL PROTECTION, , FOR TX62-63-64-65 ONLY
34	84056118	1	SEAL PROTECTION, , FOR TX66-67-68 ONLY
35	84056115	1	PLATE, , FOR TX62-63-64-65 ONLY
35	84056116	1	PLATE, , FOR TX66-67-68 ONLY
36	322358	2	WASHER, SPRING, Belleville, M8,
37	84817415	1	RAIL, SIDE,
38	84817416	1	RAIL, SIDE,

11.114(01) CHAFF SPREADER - FROM --1033001

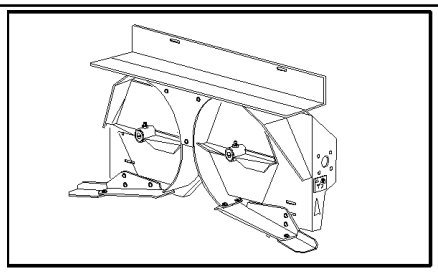

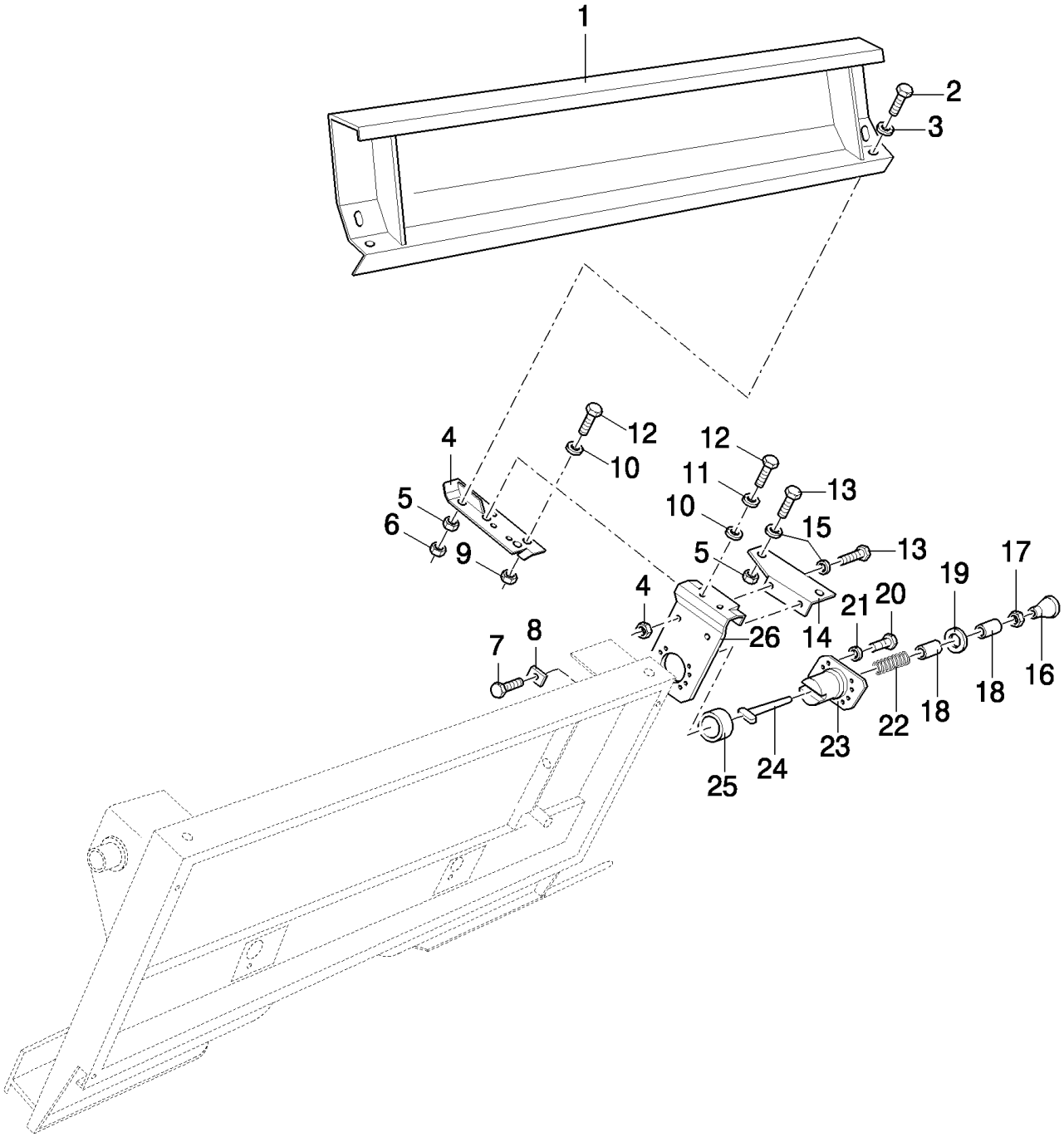

TX68 COMBINE - BASE UNIT

11.114(01) CHAFF SPREADER - FROM --1033001

ссылка	Номер детали	Кол-во	Описание
1	84056157	1	PLATE, , FOR TX62-63-64-65 ONLY
1	84056158	1	PLATE, , FOR TX66-67-68 ONLY
2	120104	4	SCREW, Hex, M8 x 20, 8.8,
3	307789	16	WASHER,
4	84056160	1	BRACKET,
5	307789	4	WASHER,
6	86629542	4	NUT, LOCK, M8 x 1.25, Cl 8,
7	120104	1	SCREW, Hex, M8 x 20, 8.8,
8	84056151	1	PLATE, COVER,
9	100037	1	NUT, M10 x 1.5, Cl 8,
10	378244	2	WASHER, M10,
11	140045	1	WASHER, SPRING, Belleville, M10,
12	11106231	2	BOLT, Hex, M10 x 25, 10.9, Full Thd,
13	43127	4	BOLT, Hex, M8 x 25, 8.8,
14	84056169	1	BRACKET,
15	307789	4	WASHER,
16	84056136	1	KNOB,
17	337475	1	NUT, M12, Cl 10,
18	84056127	2	BUSHING,
19	84019577	1	WASHER,
20	43138	1	SCREW, Hex, M10 x 20, 8.8, Full Thd,
21	140045	1	WASHER, SPRING, Belleville, M10,
22	84074786	1	SPRING,
23	84056119	1	SECTOR, TOOTHED,
24	84056126	1	ROD,
25	84056131	1	BUSHING,
26	84056125	1	SUPPORT,

TX68 COMBINE - BASE UNIT

11.201(01) FRAME

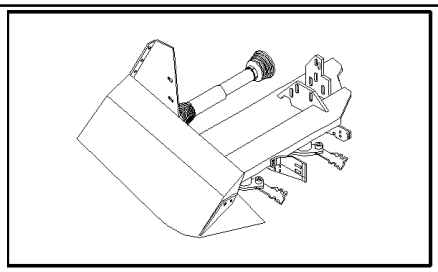

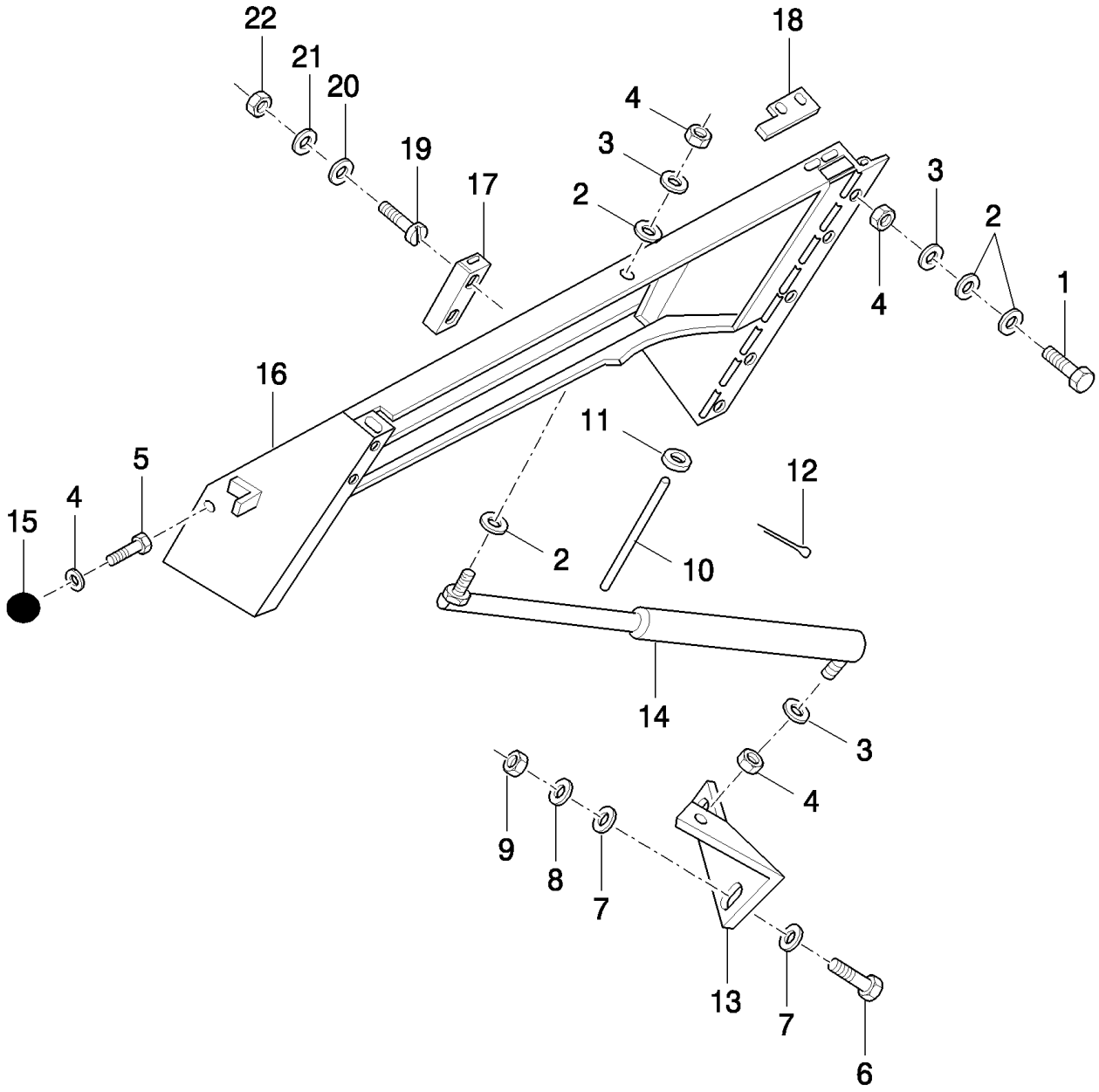

TX68 COMBINE - BASE UNIT

11.201(01) FRAME

ссылка	Номер детали	Кол-во	Описание
1	43127	AR	BOLT, Hex, M8 x 25, 8.8,
2	378243	AR	WASHER, M8,
3	322358	AR	WASHER, SPRING, Belleville, M8,
4	9706690	AR	NUT, M8, Cl 8,
5	120104	AR	SCREW, Hex, M8 x 20, 8.8,
6	9706687	AR	SCREW, Hex, M12 x 30, 8.8,
7	543043	AR	WASHER,
8	140046	AR	WASHER, Belleville, M12,
9	337475	AR	NUT, M12, Cl 10,
10	84012510	1	ROD,
11	140016	2	WASHER, M8 x 16 x 1.6,
12	300408	2	PIN, SPLIT (COTTER), M3.2 x 14,
13	84012497	1	SUPPORT,
14	84012552	1	SHOCK ABSORBER,
15	372836	1	KNOB,
16	84012528	1	
17	84012495	1	PLATE,
18	84012496	1	PLATE, COVER,
19	86511829	AR	SCREW, Cross Pan Hd, M6 x 16,
20	140015	AR	WASHER, 6MM
21	322357	AR	WASHER, SPRING, Belleville, M6,
22	15896221	AR	NUT, M6, Cl 10,

11.202(01) FRAME

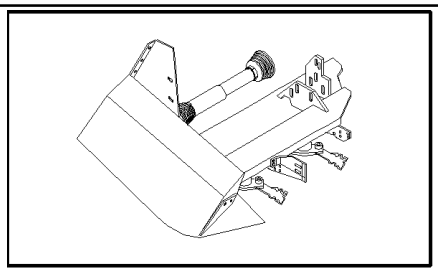

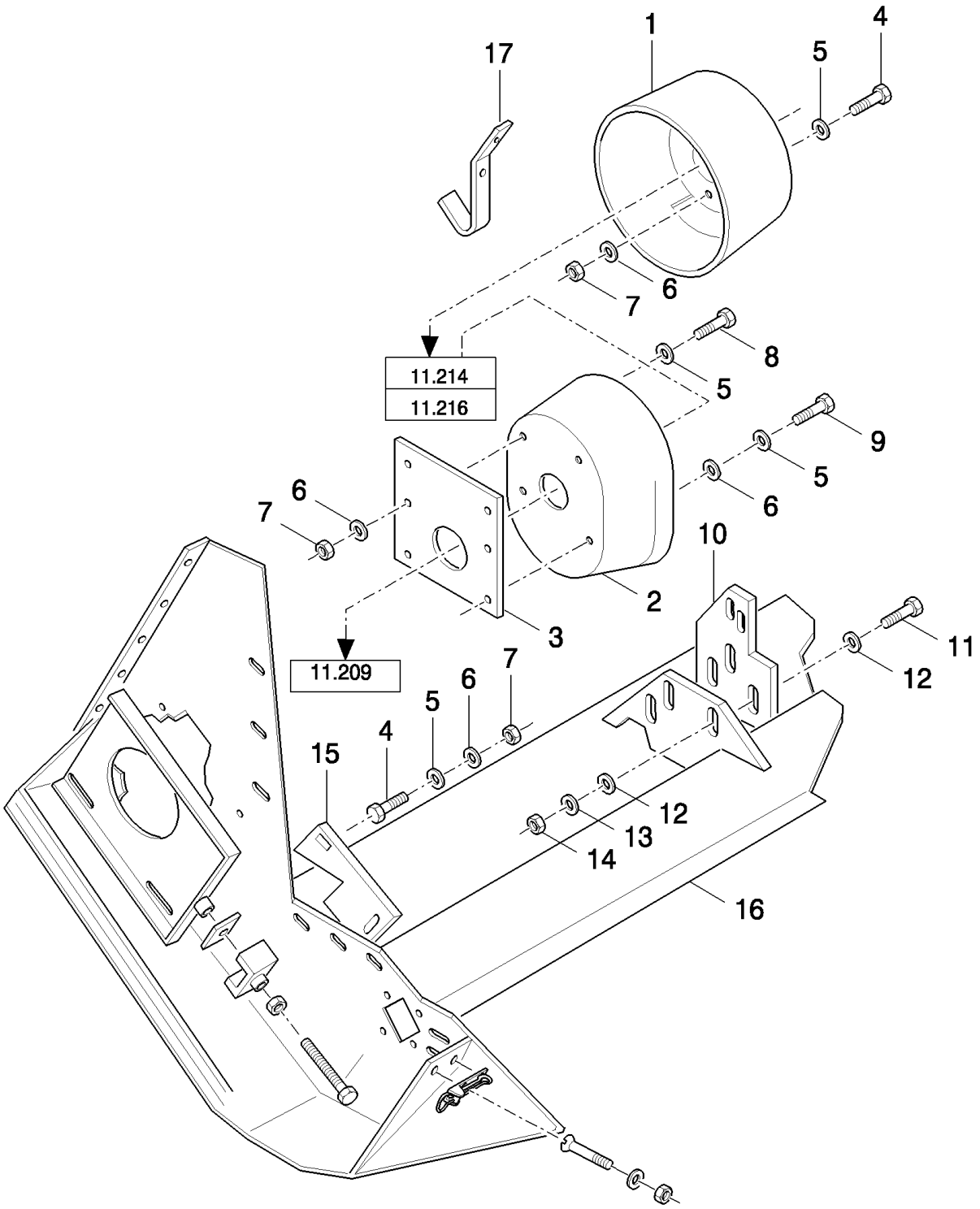

TX68 COMBINE - BASE UNIT

11.202(01) FRAME

ссылка	Номер детали	Кол-во	Описание
1	84012519	1	SHIELD,
2	84012520	1	SHIELD,
3	84012486	1	PLATE, COVER,
4	43127	AR	BOLT, Hex, M8 x 25, 8.8,
5	378243	AR	WASHER, M8,
6	322358	AR	WASHER, SPRING, Belleville, M8,
7	9706690	AR	NUT, M8, Cl 8,
9	120104	AR	SCREW, Hex, M8 x 20, 8.8,
10	84012491	AR	
11	9706687	AR	SCREW, Hex, M12 x 30, 8.8,
12	543043	AR	WASHER, 13MM
13	140046	AR	WASHER, Belleville, M12, 10MM
14	337475	AR	NUT, M12, Cl 10,
15	84012494	1	PLATE, COVER,
16	84012522	1	FRAME, , FOR 4 ROW ONLY
16	84012523	1	FRAME, , FOR 5 ROW ONLY
16	84012524	1	FRAME, , FOR 6 ROW ONLY
17	84012499	1	SUPPORT,
8	16043224	AR	BOLT, Hex, M8 x 16, 8.8, Full Thd,

11.203(01) FRAME

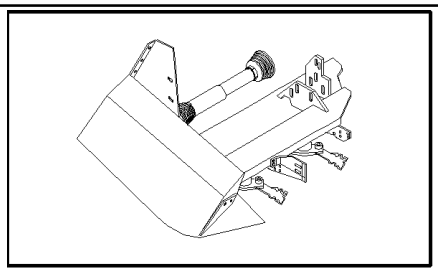

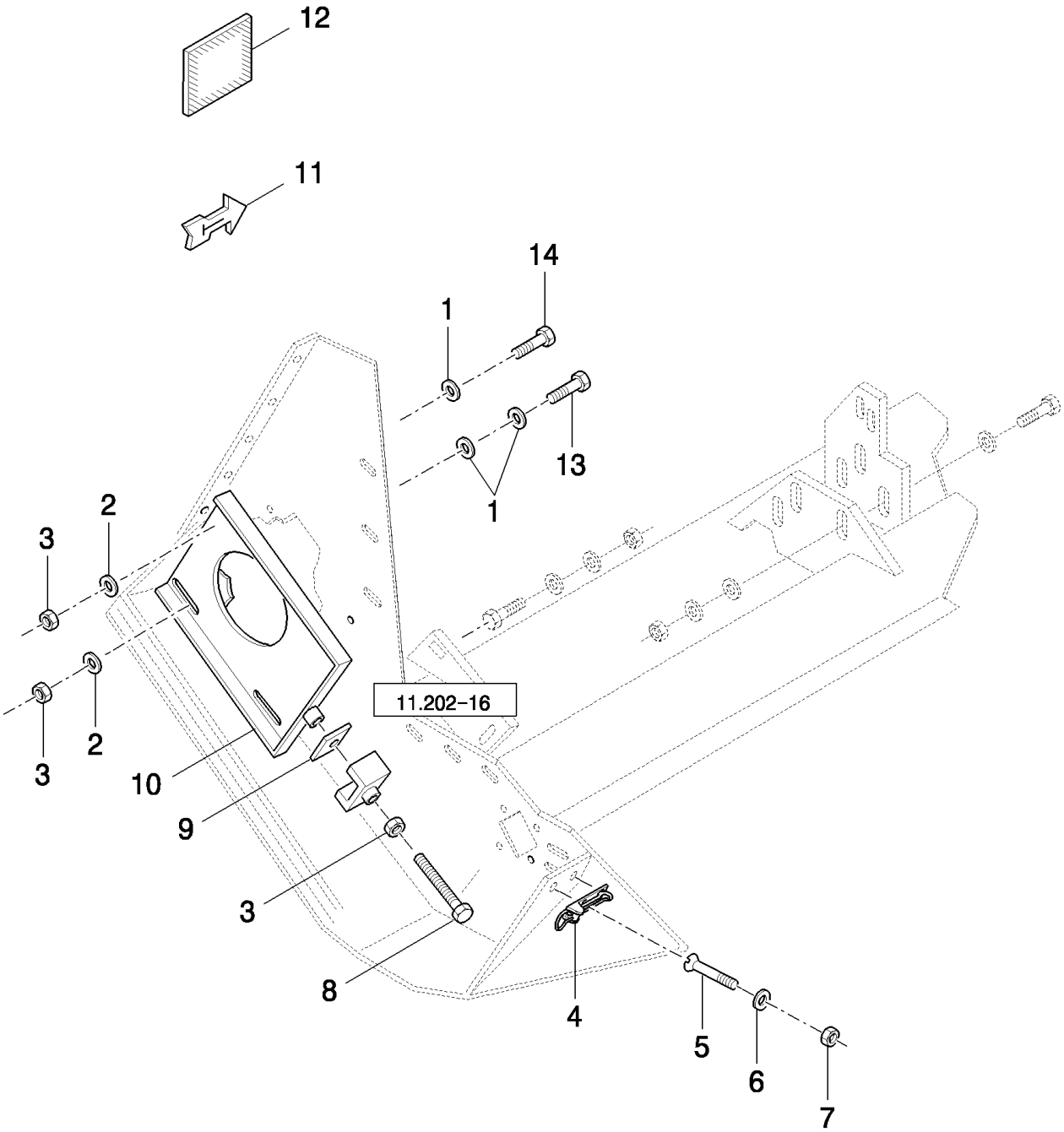

TX68 COMBINE - BASE UNIT

11.203(01) FRAME

ссылка	Номер детали	Кол-во	Описание
1	543043	AR	WASHER, 13MM
2	140046	AR	WASHER, Belleville, M12,
3	337475	AR	NUT, M12, Cl 10,
4	9513188	1	FASTENER,
5	84012566	2	SCREW,
6	322355	2	WASHER, Belleville, M4,
7	100012	2	NUT, M4, Cl 8,
8	9837937	1	BOLT, Hex, M12 x 100, 8.8, Full Thd, M12x100
9	84012487	1	NUT,
10	84012535	1	SUPPORT,
11	746832	1	DECAL,
12	379823	1	DECAL, "WARNING"
13	300389	4	BOLT, Hex, M12 x 35, 8.8, Full Thd,
14	120044	1	BOLT, CARRIAGE, Short NK, M12 x 30, Cl8.8, Full Thd,

11.204(01) BELT DRIVE

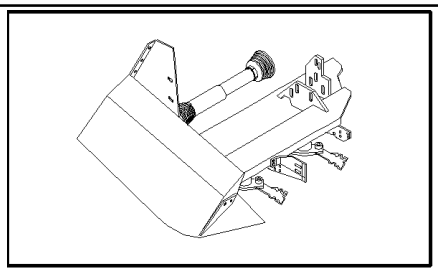

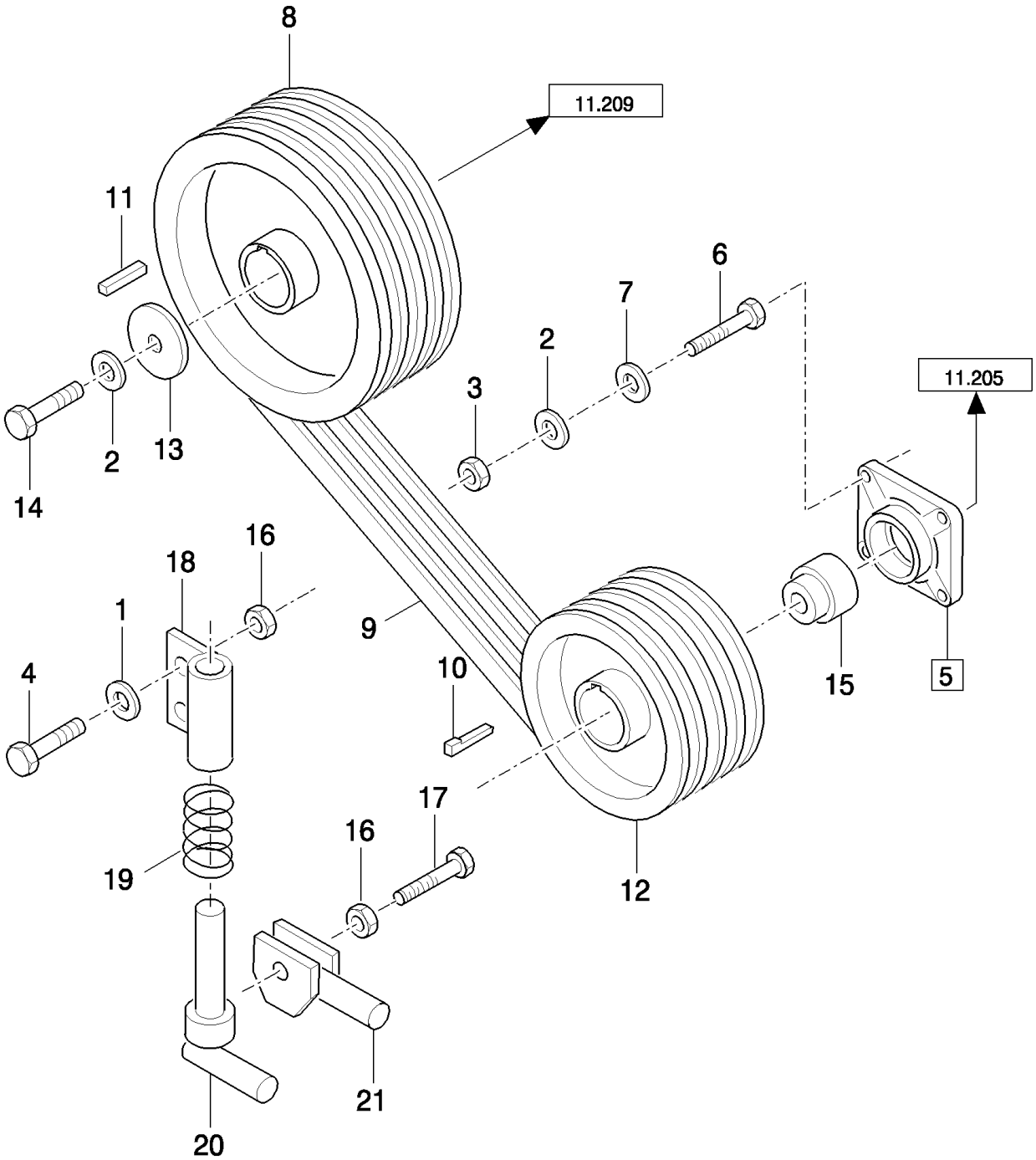

TX68 COMBINE - BASE UNIT

11.204(01) BELT DRIVE

ссылка	Номер детали	Кол-во	Описание
1	378243	AR	WASHER, M8,
2	140046	AR	WASHER, Belleville, M12,
3	337475	AR	NUT, M12, Cl 10,
5	80749551	1	BEARING ASSY, (15)
6	300389	4	BOLT, Hex, M12 x 35, 8.8, Full Thd,
7	140018	4	WASHER, M12 x 24 x 2.5,
8	84012515	1	PULLEY, 4HB
8	84032455	1	PULLEY, 5HB, FOR 6 ROW ONLY
9	84012562	1	BELT, TRANSMISSION, 4HB
9	84032454	1	BELT, TRANSMISSION, 5HB, FOR 6 ROW ONLY
10	170026	1	KEY,
11	170052	1	KEY,
12	84012516	1	PULLEY, 4HB
12	84032456	1	PULLEY, 5HB, FOR 6 ROW ONLY
13	9511052	1	WASHER, M12 x 44 x 4, 12MM
14	86517808	1	SCREW, Cap, HH, CL 8.8, M12 x 1.75 x 25
15	212606	1	BEARING ASSY,
16	86629542	2	NUT, LOCK, M8 x 1.25, Cl 8,
17	120107	1	BOLT, Hex, M8 x 50, 8.8, Full Thd,
18	84014461	1	SUPPORT,
19	84014462	1	SPRING,
20	84014463	1	HOOK,
21	84014464	1	HANDLE,
4	16043224	AR	BOLT, Hex, M8 x 16, 8.8, Full Thd,

11.205(01) DRIVE

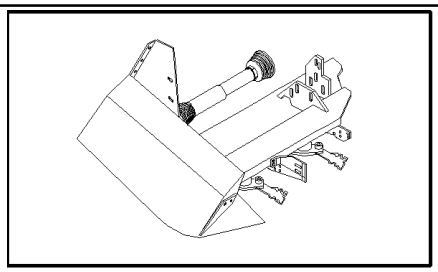

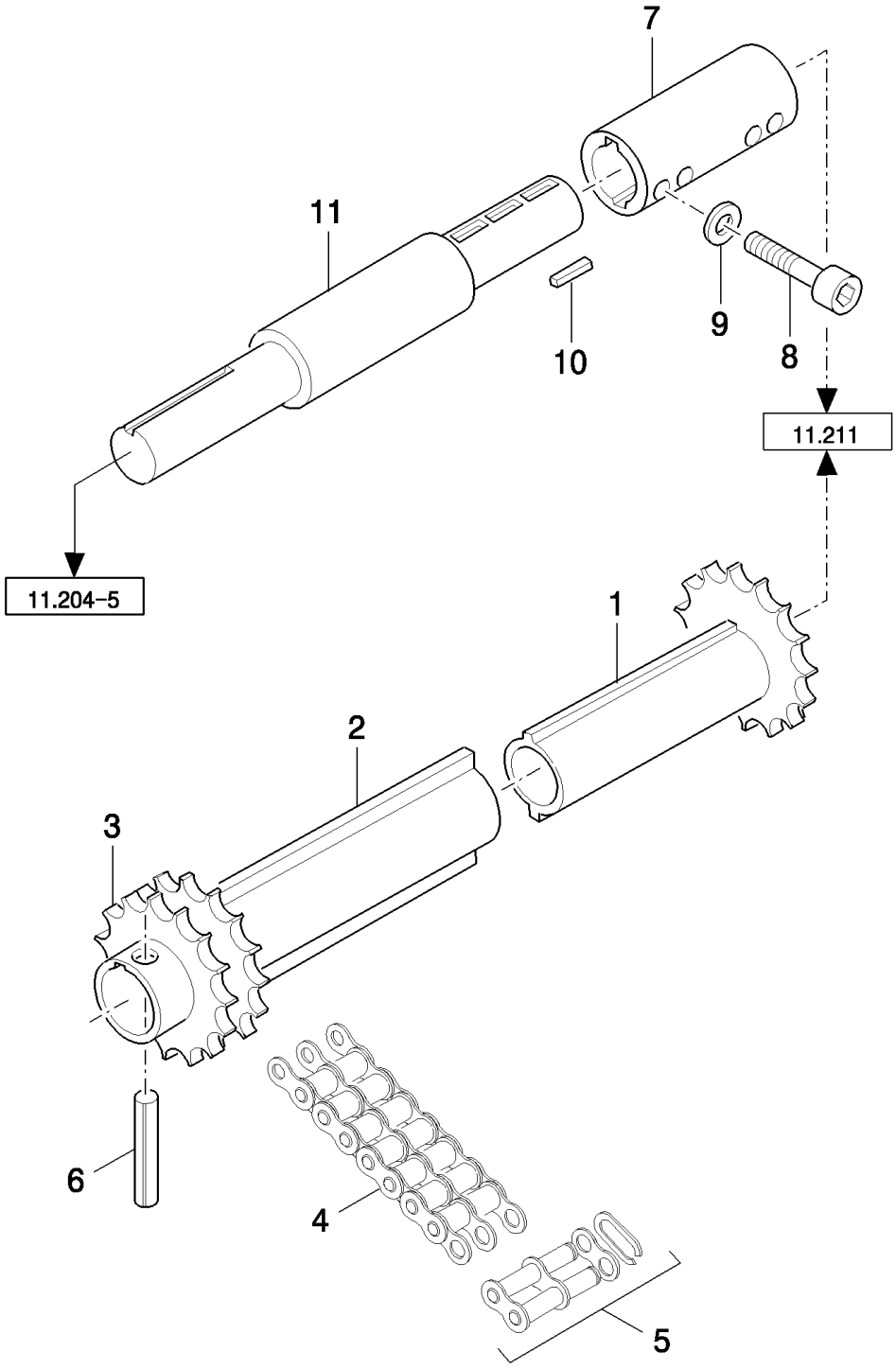

TX68 COMBINE - BASE UNIT

11.205(01) DRIVE

ссылка	Номер детали	Кол-во	Описание
1	749545	AR	SPROCKET, DRIVEN,
2	749546	AR	SPROCKET, DRIVEN,
3	749003	AR	SPROCKET, DRIVEN,
4	749142	AR	CHAIN, (5)
5	45217	AR	LINK, CHAIN,
6	300874	AR	PIN, LOCK, M8 x 60, Slotted,
7	84012511	AR	BUSHING,
8	300443	AR	SCREW, M10x35
9	140045	AR	WASHER, SPRING, Belleville, M10,
10	749130	AR	KEY,
11	84012506	1	SHAFT,

TX68 COMBINE - BASE UNIT

11.206(01) GUIDE PLATES

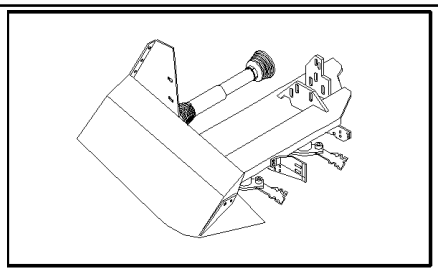

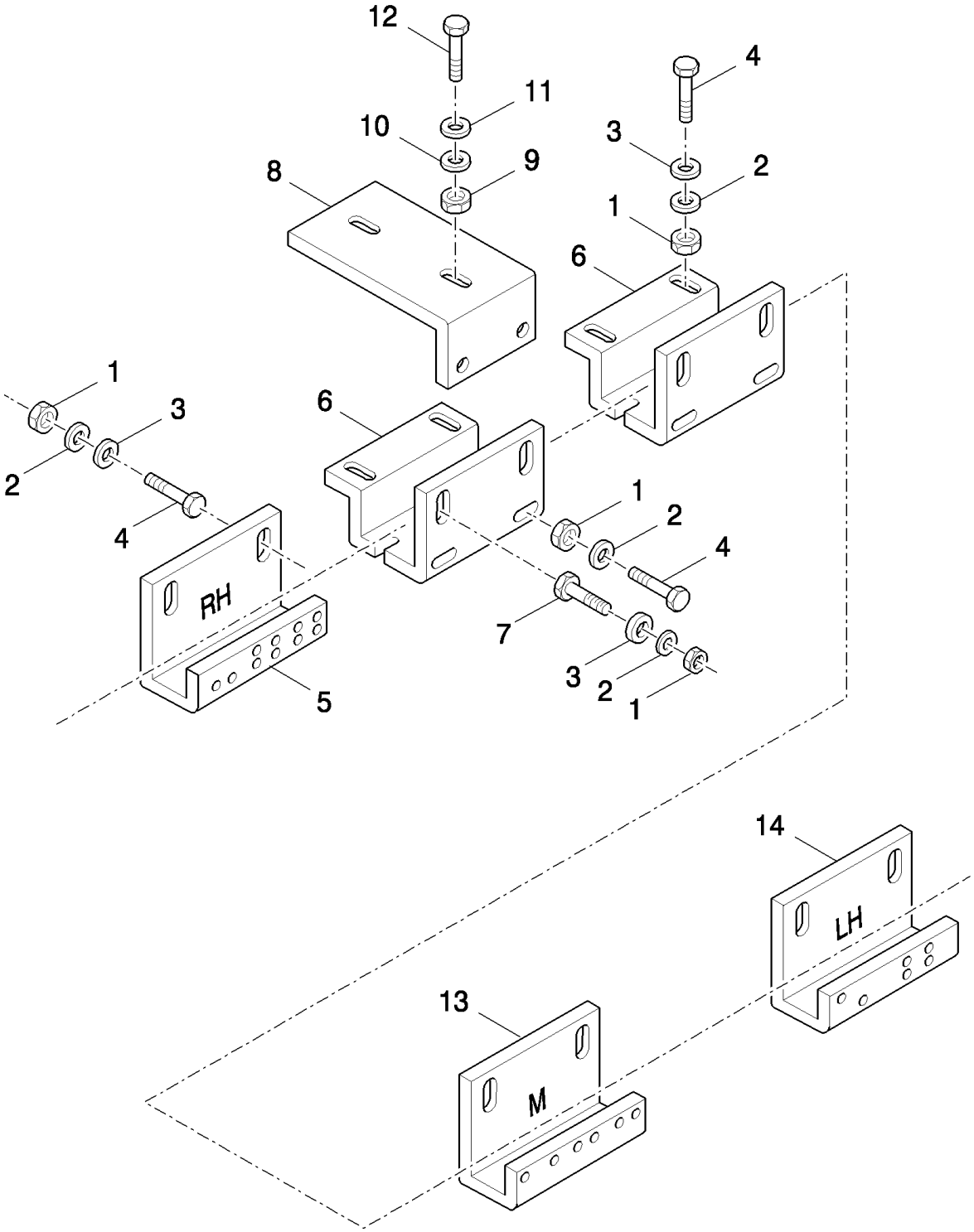

TX68 COMBINE - BASE UNIT

11.206(01) GUIDE PLATES

ссылка	Номер детали	Кол-во	Описание
1	9706690	AR	NUT, M8, Cl 8,
2	322358	AR	WASHER, SPRING, Belleville, M8,
3	378243	AR	WASHER, M8,
4	120104	AR	SCREW, Hex, M8 x 20, 8.8,
5	84012530	1	COVER, RH
6	84012498	AR	COVER,
7	86507486	AR	BOLT, CARRIAGE, Short NK, M8 x 20, Cl8.8, Full Thd,
8	84012525	AR	
9	100016	AR	NUT, M10, Cl 8,
10	140045	AR	WASHER, SPRING, Belleville, M10,
11	140042	AR	WASHER, M10 x 34 x 3,
12	43140	AR	BOLT, Hex, M10 x 30, 8.8, Full Thd,
13	84012529	AR	COVER, MIDDLE
14	84012531	1	COVER, LH

TX68 COMBINE - BASE UNIT

11.207(01) GUIDE PLATES

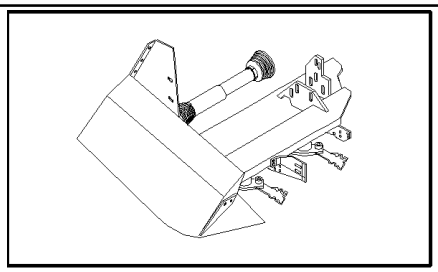

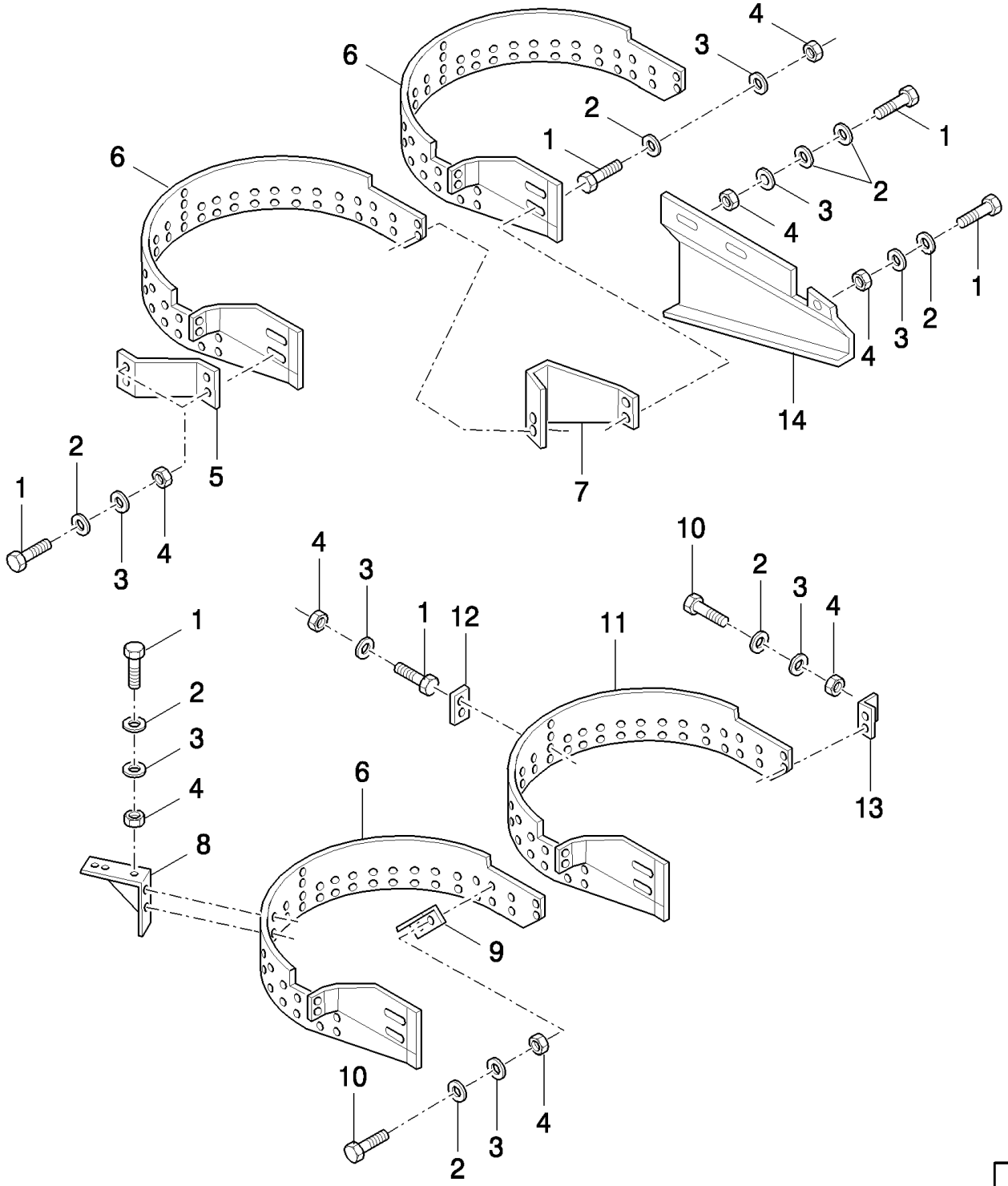

TX68 COMBINE - BASE UNIT

11.207(01) GUIDE PLATES

ссылка	Номер детали	Кол-во	Описание
1	43127	AR	BOLT, Hex, M8 x 25, 8.8,
2	378243	AR	WASHER, M8,
3	322358	AR	WASHER, SPRING, Belleville, M8,
4	9706690	AR	NUT, M8, Cl 8,
5	84012489	1	SUPPORT,
6	84012526	AR	PLATE,
7	84012493	AR	SUPPORT, , FOR 762MM ROW DISTANCE ONLY
7	84012490	AR	SUPPORT, , FOR 800MM ROW DISTANCE ONLY
8	84012488	AR	
9	9818758	AR	BRACKET,
10	120104	AR	SCREW, Hex, M8 x 20, 8.8,
11	84012526	1	PLATE, , FOR 762MM ROW DISTANCE ONLY
11	84012527	1	PLATE, , FOR 800MM ROW DISTANCE ONLY
12	84012484	AR	PLATE, COVER,
13	84012501	1	BRACKET, , FOR 762MM ROW DISTANCE ONLY
14	84012492	AR	SUPPORT, , FOR 762MM ROW DISTANCE ONLY

11.208(01) CHOPPER KNIVES

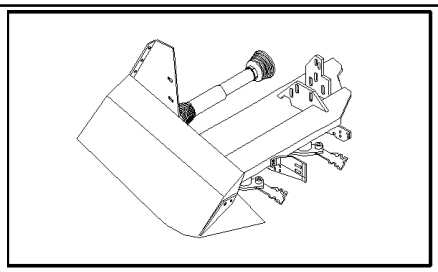

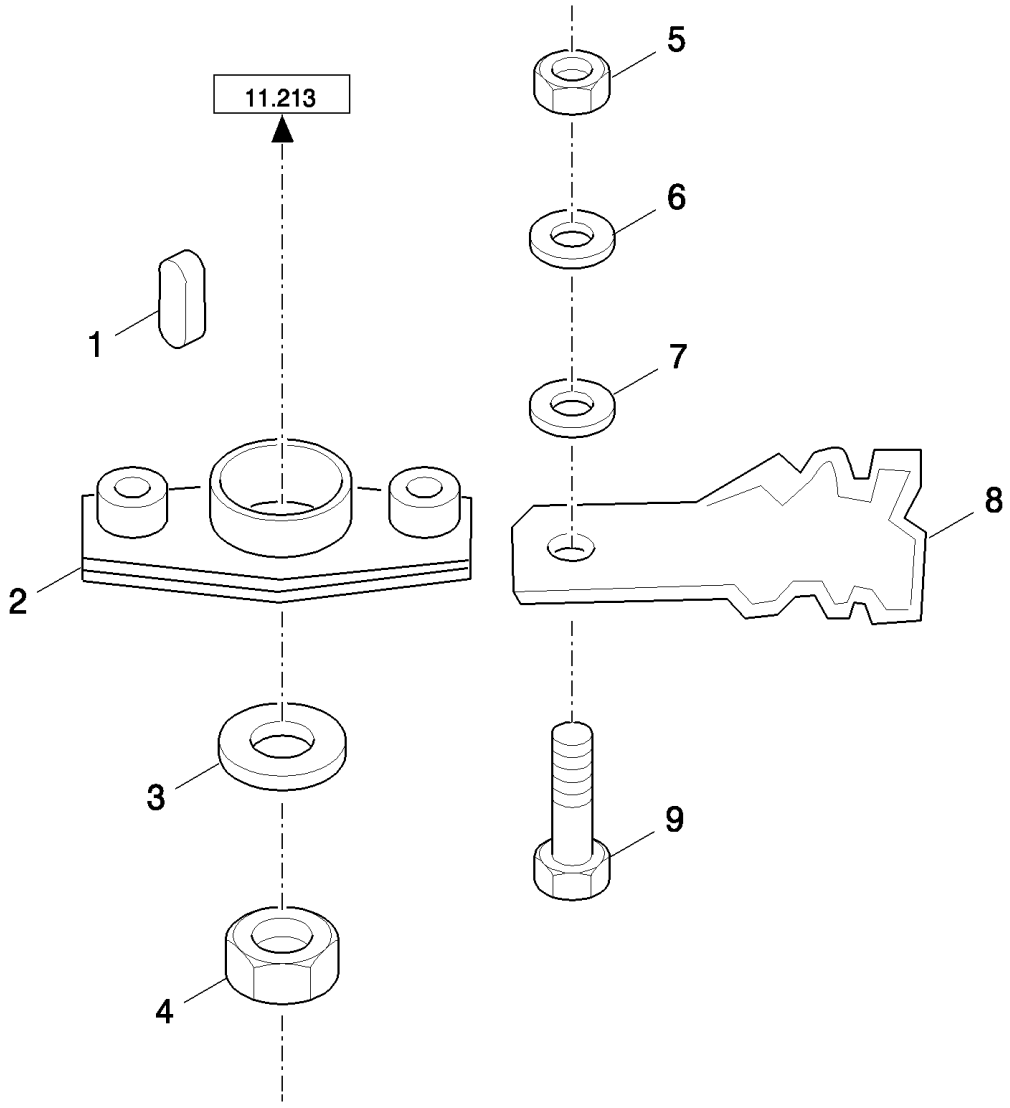

TX68 COMBINE - BASE UNIT

11.208(01) CHOPPER KNIVES

ссылка	Номер детали	Кол-во	Описание
1	170005	1	KEY,
2	749553	AR	SUPPORT,
3	394632	AR	WASHER, M20 x 40 x 4, HT,
4	84015548	AR	NUT, LOCK, M20 x 1.5, Cl 8.8, M20
5	100038	AR	NUT, M12 x 1.75, Cl 8,
6	140018	AR	WASHER, M12 x 24 x 2.5,
7	749556	AR	SPACER,
8	84012502	AR	KNIFE,
9	749555	AR	BOLT,

11.209(01) GEARBOX

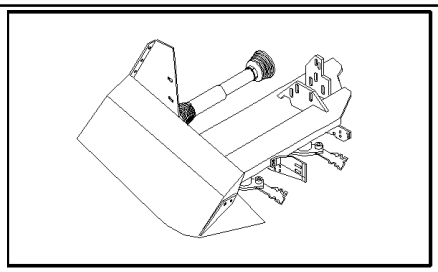

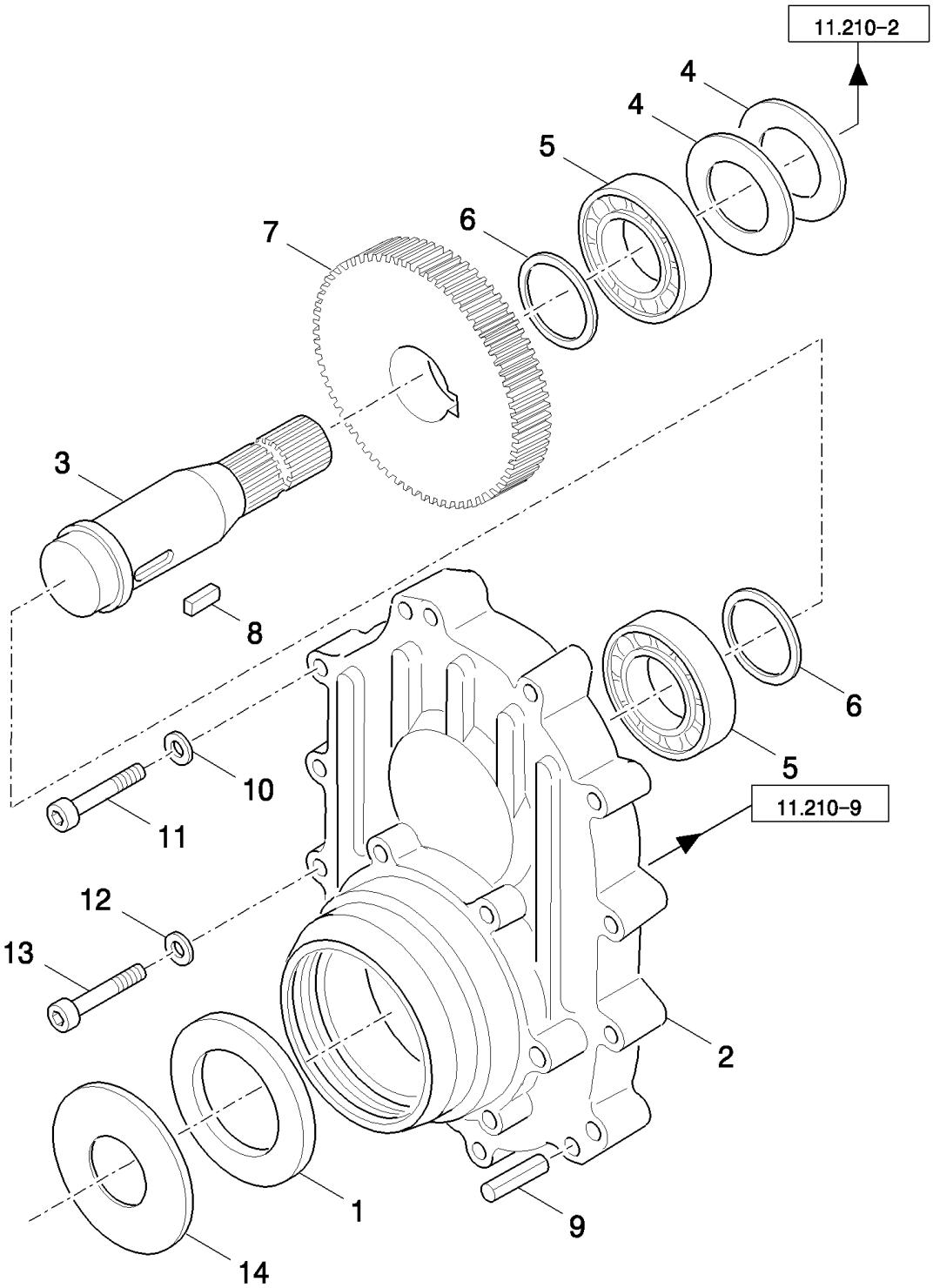

TX68 COMBINE - BASE UNIT

11.209(01) GEARBOX

ссылка	Номер детали	Кол-во	Описание
	84012557	1	GEARBOX, , INCL. REFS.1 TO 11,14 AND FIG. 11.210
1	84012545	1	RING,
2	84012504	1	HOUSING, HALF
3	84012509	1	SHAFT,
4	84012582	AR	SHIM, THK.:0.1MM
4	84012583	AR	SHIM, THK.:0.3MM
4	412192	AR	SHIM, THK.:0.5MM
5	440395	2	BEARING ASSY,
6	84012574	3	PLATE, ADJUSTING,
7	84012518	1	GEAR,
8	84012585	1	KEY,
9	84014303	2	PIN, ROLL,
10	140045	12	WASHER, SPRING, Belleville, M10,
11	412412	12	SCREW, Hex Soc Hd, M10 x 60, 8.8, M10x60
12	140046	6	WASHER, Belleville, M12,
13	86517808	6	SCREW, M12x35
14	84012514	1	COVER,

11.210(01) GEARBOX

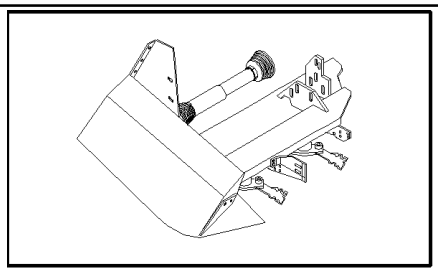

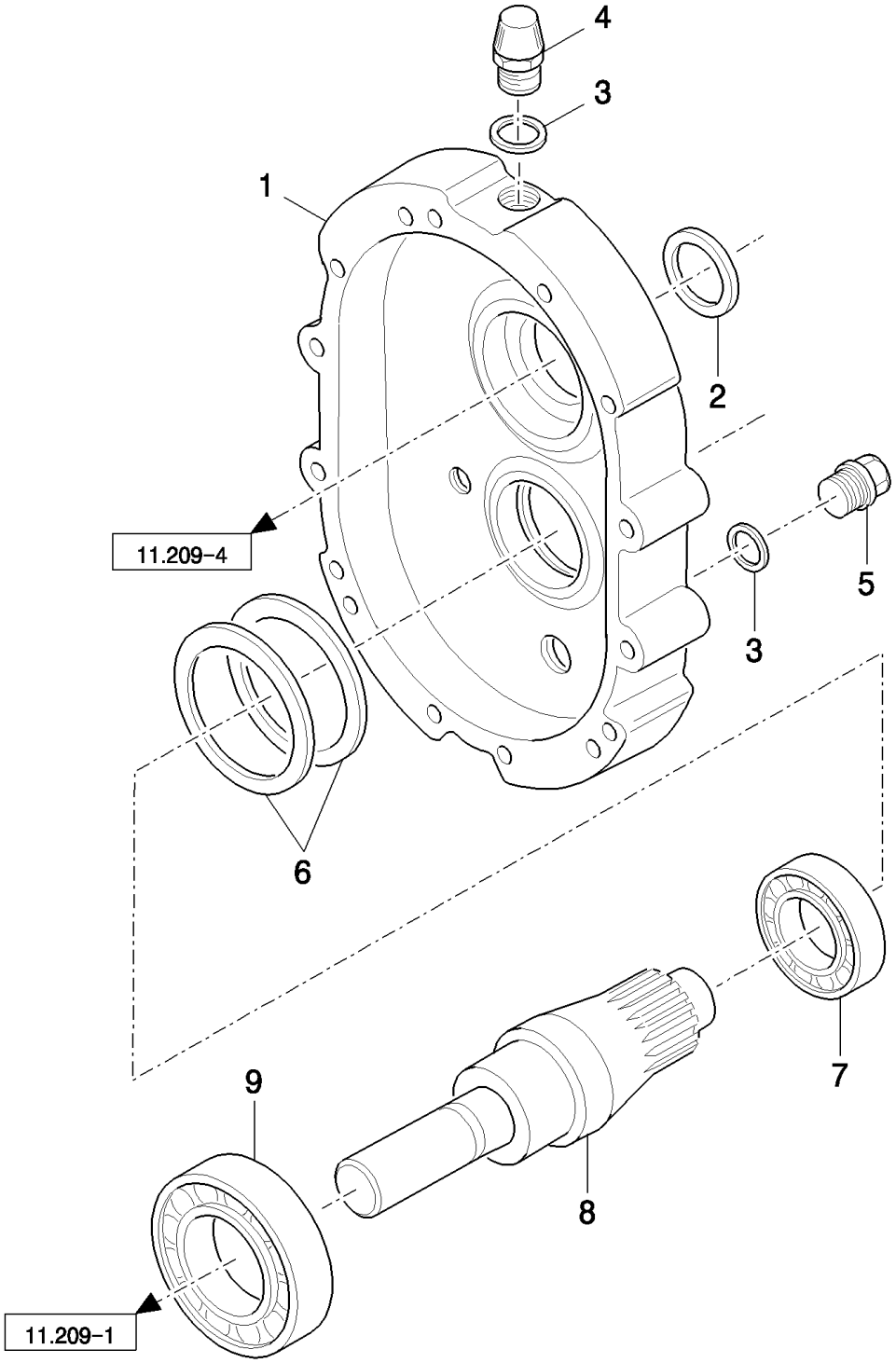

TX68 COMBINE - BASE UNIT

11.210(01) GEARBOX

ссылка	Номер детали	Кол-во	Описание
1	84012505	1	HOUSING, HALF
2	84012544	1	RING,
3	722441	3	GASKET,
4	799406	1	BREATHER,
5	150060	2	PLUG,
6	556682	AR	SHIM, 0.1mm Thk,
6	556681	AR	SHIM, 0.3mm Thk,
6	84012578	AR	SHIM, THK.:0.5MM
7	84012538	1	BEARING ASSY,
8	84012559	1	SHAFT,
9	84012537	1	BEARING ASSY,

11.211(01) GEARBOX

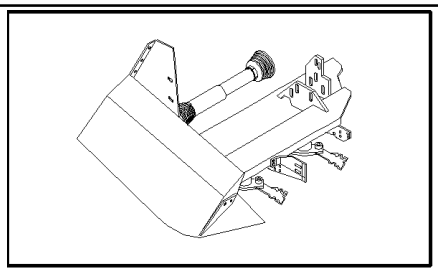

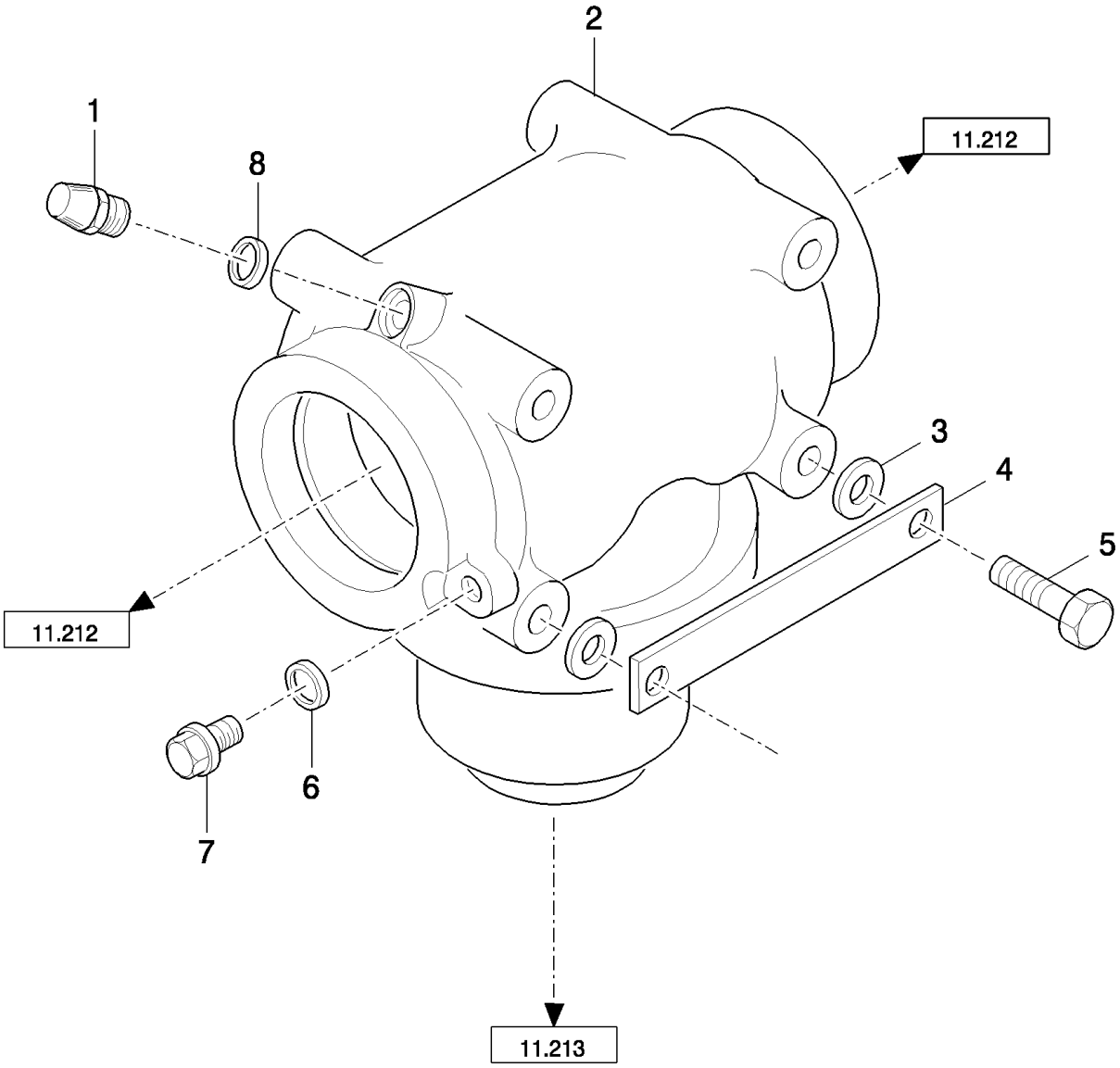

TX68 COMBINE - BASE UNIT

11.211(01) GEARBOX

ссылка	Номер детали	Кол-во	Описание
	84012558	1	GEARBOX, , INCL. FIGS .11.211 (EXCEPT 3 TO 5), 11.212 AND 11.213
1	350613	1	BREATHER,
2	84012503	1	HOUSING,
3	9511052	4	WASHER, M12 x 44 x 4,
4	84012485	2	
5	86517808	4	SCREW, Cap, HH, CL 8.8, M12 x 1.75 x 25
6	80220048	2	O-RING,
7	9832307	2	PLUG,
8	84011378	1	RING,

11.212(01) GEARBOX

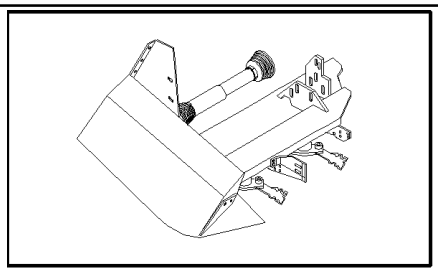

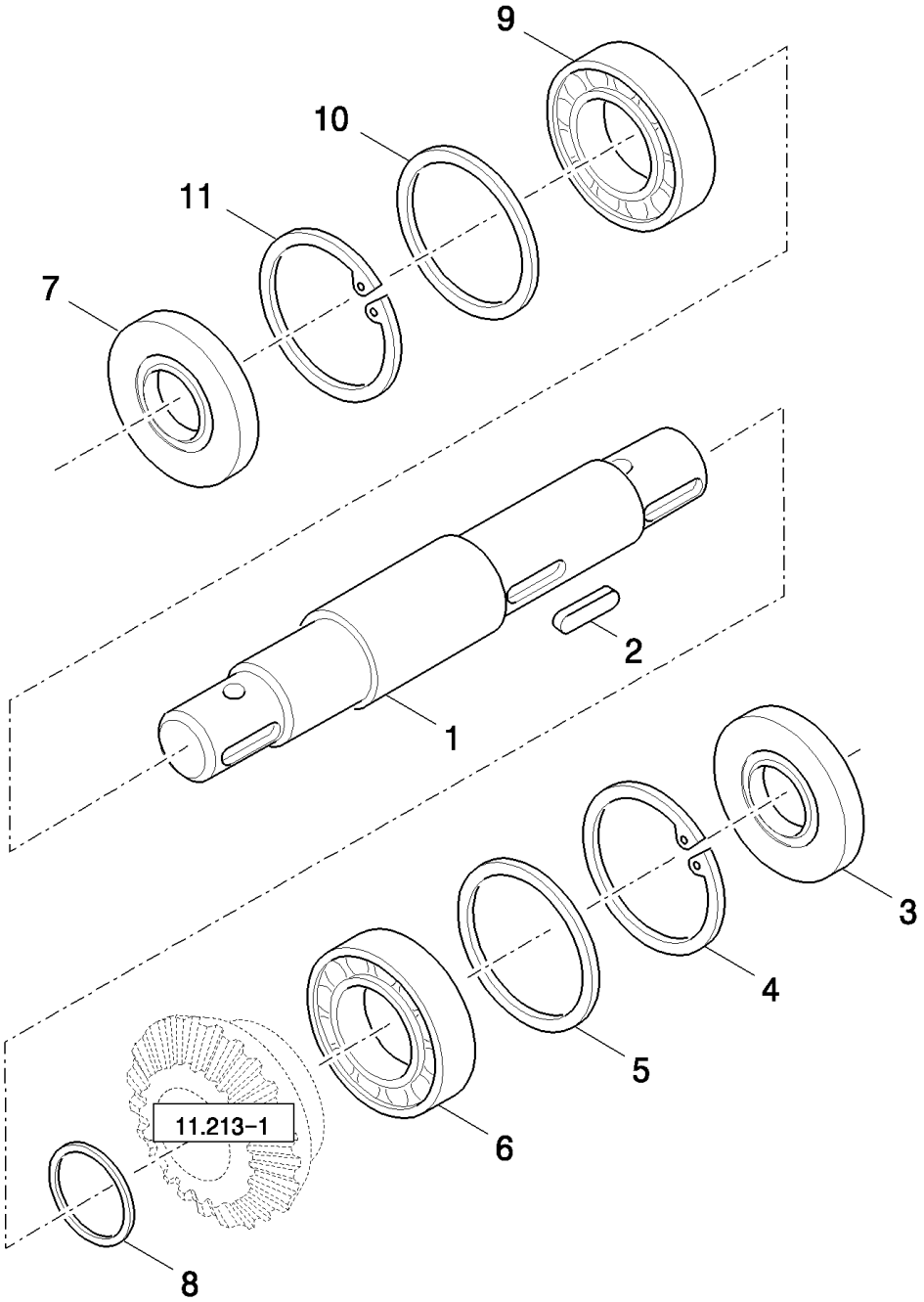

TX68 COMBINE - BASE UNIT

11.212(01) GEARBOX

ссылка	Номер детали	Кол-во	Описание
1	84012507	1	SHAFT,
2	749557	1	KEY,
3	749565	1	RING,
4	370013	1	RING, SNAP, M90, Int,
5	84012582	AR	SHIM, THK.:0.1MM
5	84012583	AR	SHIM, THK.:0.3MM
5	84012192	AR	SHIM, THK.:0.5MM
6	535980	1	BEARING ASSY,
7	749560	1	RING,
8	84012513	1	
9	114085	1	BEARING, BALL,
10	556887	AR	SHIM, 0.1mm Thk,
10	556832	AR	SHIM, 0.3mm Thk,
10	556833	AR	SHIM, 0.5mm Thk,
11	80300633	1	RING, SNAP,

11.213(01) GEARBOX

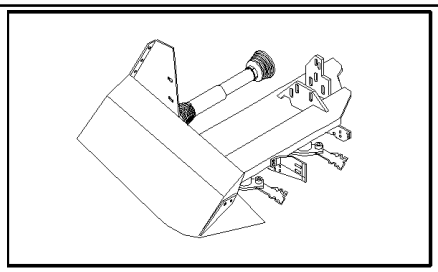

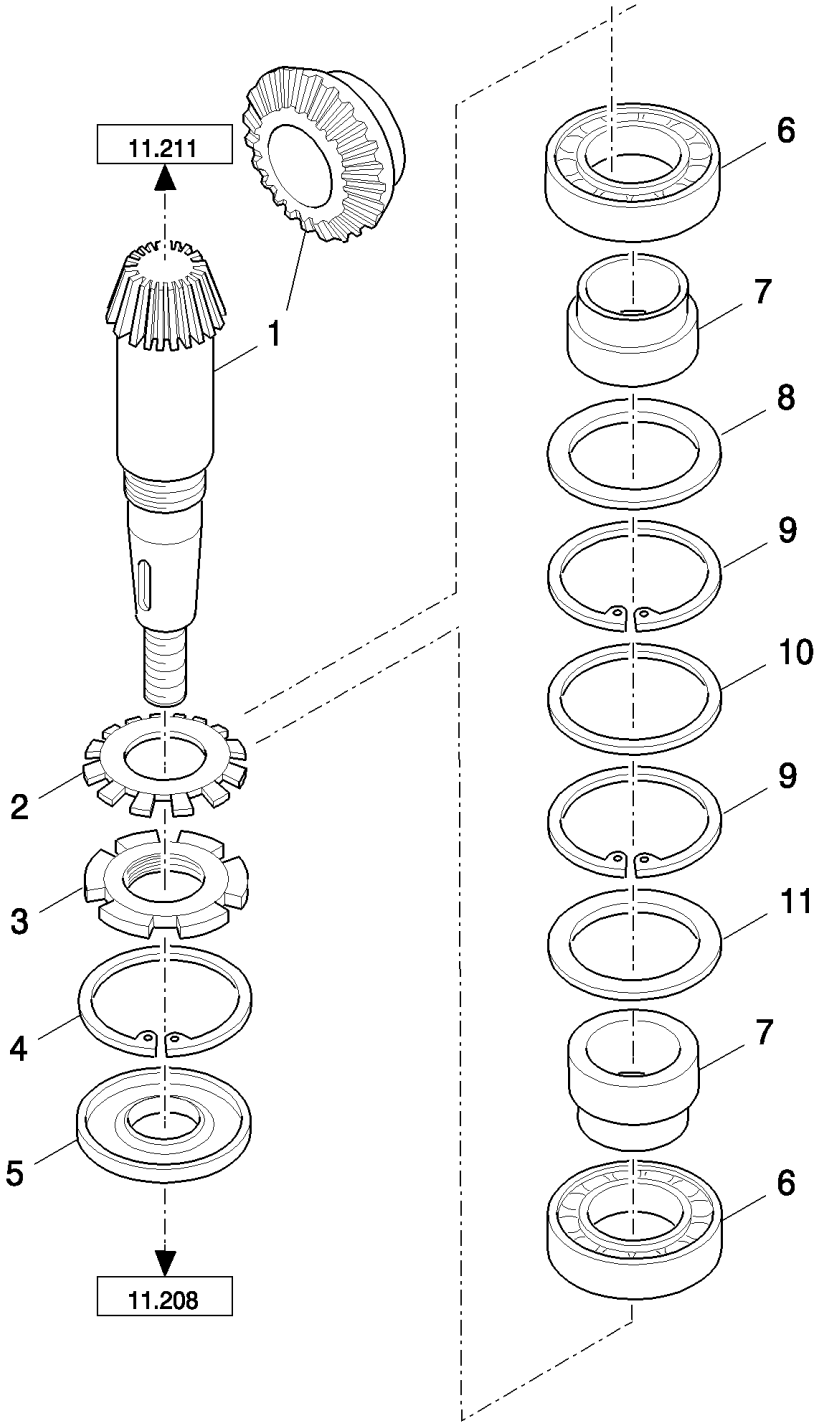

TX68 COMBINE - BASE UNIT

11.213(01) GEARBOX

ссылка	Номер детали	Кол-во	Описание
1	84012653	1	GEAR SET,
2	412352	1	PLATE, LOCKING,
3	412351	1	NUT,
4	370018	1	RING, SNAP,
5	749568	1	RING,
6	161715	2	BEARING ASSY,
7	749569	2	RING,
8	749566	1	SHIM, 0.3mm Thk,
9	370018	2	RING, SNAP,
10	556682	AR	SHIM, 0.1mm Thk,
10	84012576	AR	SHIM, THK.:0.2MM
10	556681	AR	SHIM, 0.3mm Thk,
10	84012578	AR	SHIM, THK.:0.5MM
10	749566	AR	SHIM, 0.3mm Thk,
11	84012571	AR	SHIM, THK.:0.1MM
11	84012572	AR	SHIM, THK.:0.2MM
11	84012573	AR	SHIM, THK.:0.3MM
11	746862	AR	SHIM, 0.5mm Thk,

11.214(01) POWER TAKE-OFF

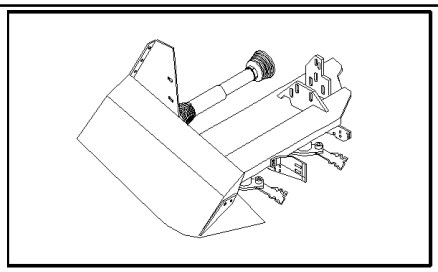

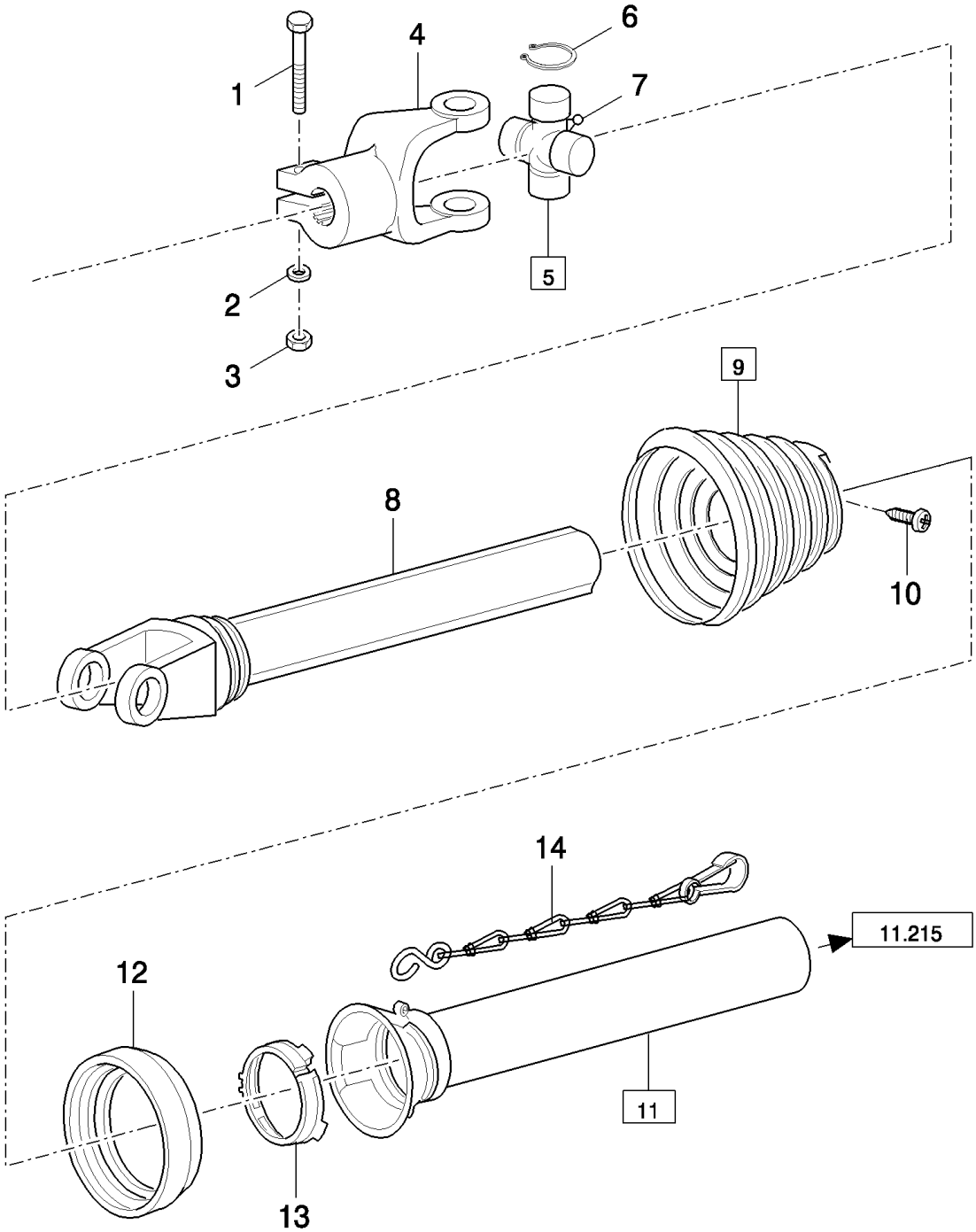

FOR 4 ROW ONLY

TX68 COMBINE - BASE UNIT

11.214(01) POWER TAKE-OFF

ссылка	Номер детали	Кол-во	Описание
	84012554	1	SHAFT, PTO, , INCL. FIGS. 11.214 AND 11.215
	84014295	1	SHAFT, PTO, HALF (1 to 14)
1	9706717	1	BOLT, Hex, M12 x 70, 8.8, Full Thd,
2	140046	1	WASHER, Belleville, M12,
3	337475	1	NUT, M12, Cl 10,
4	9604618	1	YOKE,
5	418936	1	SPIDER, (6,7)
6	456752	4	CIRCLIP,
7	150024	1	NIPPLE, LUBE, 45є, M8 x 1,
8	84014293	1	YOKE,
9	750373	1	SHIELD, (10)
10	321803	1	SCREW, Cross Pan Hd, M4 x 10,
11	80750458	1	SHIELD, (9,10,12 to 14)
12	456679	1	COLLAR,
13	728164	1	RING,
14	379650	1	CHAIN,

FOR 4 ROW ONLY

TX68 COMBINE - BASE UNIT

11.215(01) POWER TAKE-OFF

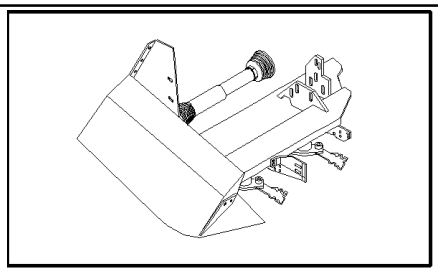

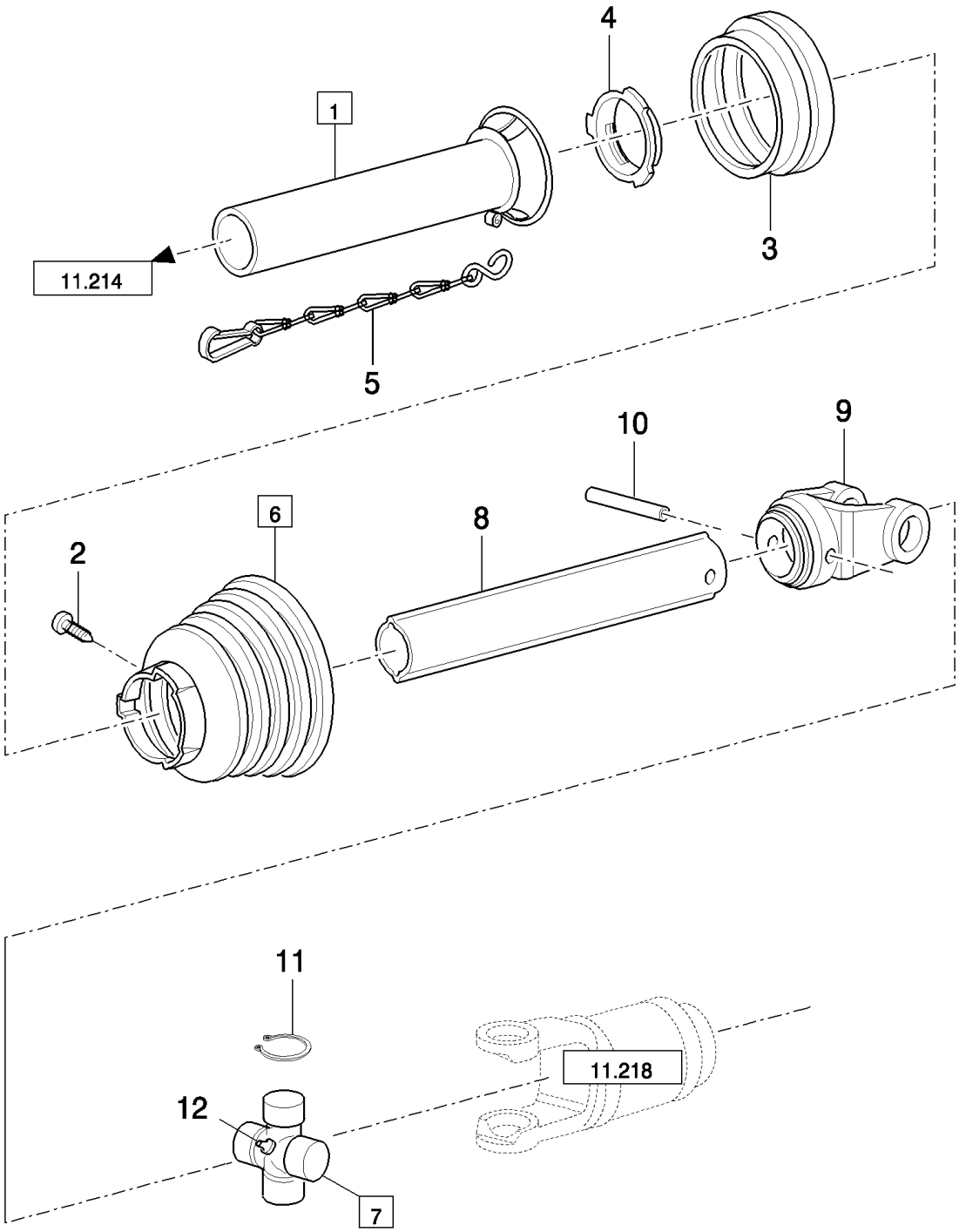

FOR 4 ROW ONLY

TX68 COMBINE - BASE UNIT

11.215(01) POWER TAKE-OFF

ссылка	Номер детали	Кол-во	Описание
	84014300	1	SHAFT, PTO, HALF (1 to 12)
1	84014296	1	SHIELD, (2 to 6)
2	321803	1	SCREW, Cross Pan Hd, M4 x 10,
3	456679	1	COLLAR,
4	728164	1	RING,
5	379650	1	CHAIN,
6	751669	1	SHIELD, (2)
7	418936	1	SPIDER, (11,12)
8	84014297	1	SHAFT, PROPELLOR,
9	727163	1	YOKE,
10	412690	1	PIN, M10 x 65, Slotted,
11	456752	4	CIRCLIP,
12	150024	1	NIPPLE, LUBE, 45є, M8 x 1,

FOR 4 ROW ONLY

11.216(01) POWER TAKE-OFF

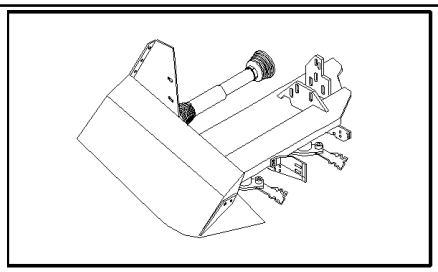

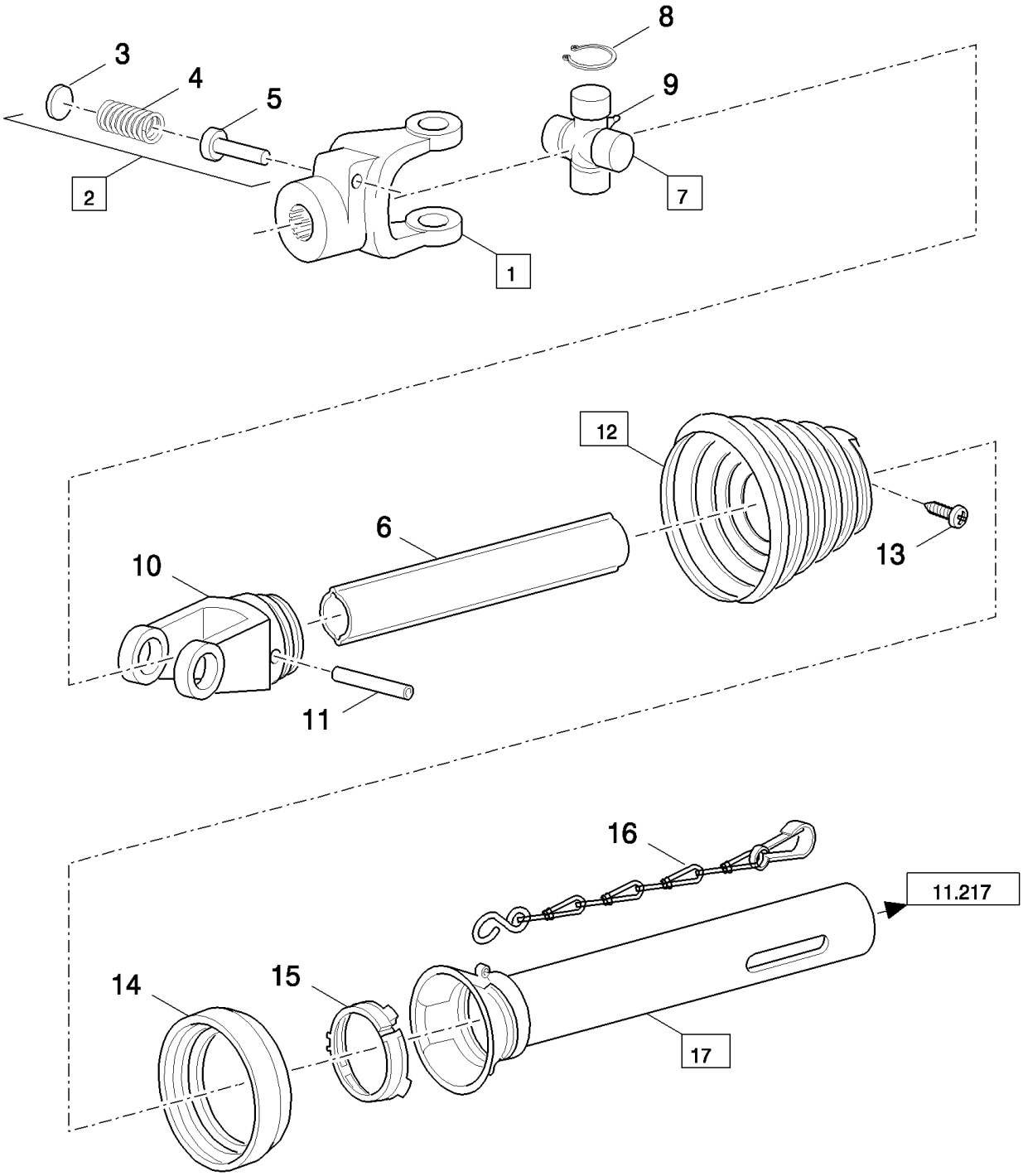

FOR 5 AND 6 ROW ONLY

TX68 COMBINE - BASE UNIT

11.216(01) POWER TAKE-OFF

ссылка	Номер детали	Кол-во	Описание
	84012555	1	SHAFT, PTO, , INCL. FIGS. 11.216 AND 11.217, FOR 5 ROW ONLY
	84012556	1	SHAFT, PTO, , INCL. FIGS. 11.216 AND 11.217, FOR 6 ROW ONLY
	84014286	1	SHAFT, PTO, HALF (1 to 17), FOR 5 ROW ONLY
	84014287	1	SHAFT, PTO, HALF (1 to 17), FOR 6 ROW ONLY
1	734184	1	YOKE, (2)
2	744051	1	KIT, (3 to 5)
3	427846	1	DISC,
4	427847	1	SPRING,
5	427848	1	PIN, ROLL,
6	448881	1	SHAFT, PROPELLOR, L:440MM, FOR 5 ROW ONLY
6	440259	1	SHAFT, PROPELLOR, L:667MM, FOR 6 ROW ONLY
7	734264	1	SPIDER, (8,9)
8	301646	4	CIRCLIP,
9	150024	1	NIPPLE, LUBE, 45є, M8 x 1,
10	734185	1	YOKE,
11	440437	1	PIN, M10 x 80 Slotted,
12	750309	1	SHIELD, (13)
13	321803	1	SCREW, Cross Pan Hd, M4 x 10,
14	456679	1	COLLAR,
15	411728	1	RACE, RING,
16	379650	1	CHAIN, , FOR 5 ROW ONLY
16	9620145	1	CHAIN, , FOR 6 ROW ONLY
17	84014284	1	SHIELD, (12 to 16), FOR 5 ROW ONLY
17	84014285	1	SHIELD, (12 to 16), FOR 6 ROW ONLY

FOR 5 AND 6 ROW ONLY

11.217(01) POWER TAKE-OFF

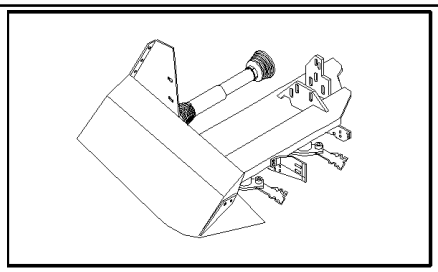

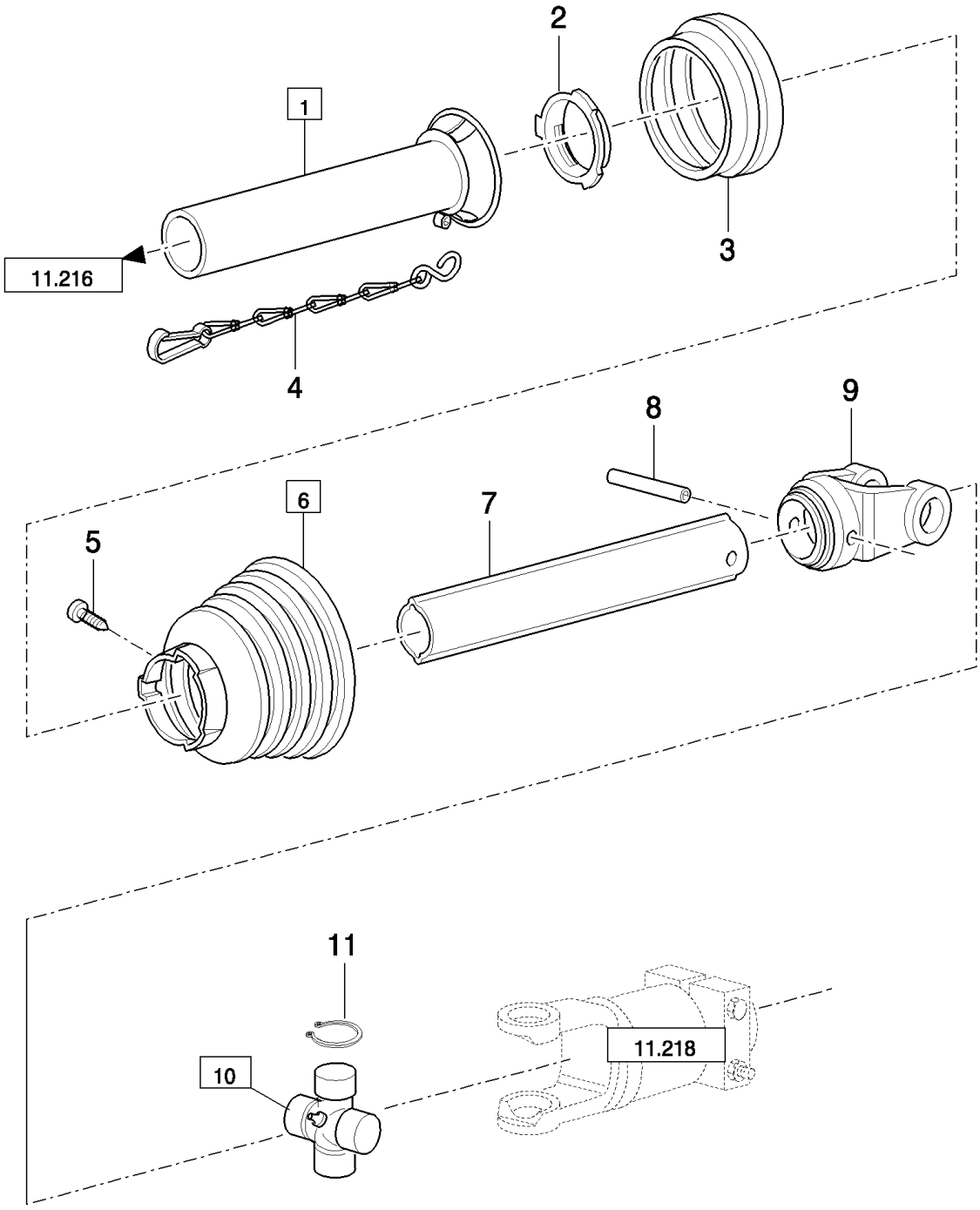

FOR 5 AND 6 ROW ONLY

TX68 COMBINE - BASE UNIT

11.217(01) POWER TAKE-OFF

ссылка	Номер детали	Кол-во	Описание
	84014291	1	SHAFT, PTO, HALF (1 to 12), FOR 5 ROW ONLY
	84014292	1	SHAFT, PTO, HALF (1 to 12), FOR 6 ROW ONLY
1	84014288	1	SHIELD, (2 to 6), FOR 5 ROW ONLY
1	84014289	1	SHIELD, (2 to 6), FOR 6 ROW ONLY
2	411728	1	RACE, RING,
3	456679	1	COLLAR,
4	379650	1	CHAIN, , FOR 5 ROW ONLY
4	9620145	1	CHAIN, , FOR 6 ROW ONLY
5	321803	1	SCREW, Cross Pan Hd, M4 x 10,
6	84014290	1	SHIELD, (5)
7	80440538	1	L:422MM, FOR 5 ROW ONLY
7	9615020	1	SHAFT, PROPELLOR, L:658MM, FOR 6 ROW ONLY
8	440437	1	PIN, M10 x 80 Slotted,
9	734265	1	YOKE,
10	734264	1	SPIDER, (11,12)
11	301646	4	CIRCLIP,
12	150024	1	NIPPLE, LUBE, 45є, M8 x 1,

FOR 5 AND 6 ROW ONLY

11.218(01) OVERRUNNING CLUTCH

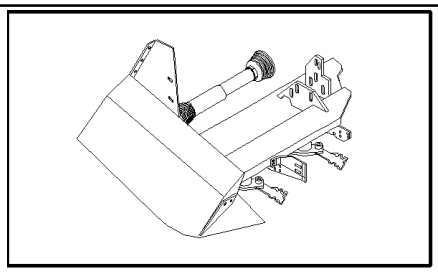

4 Row

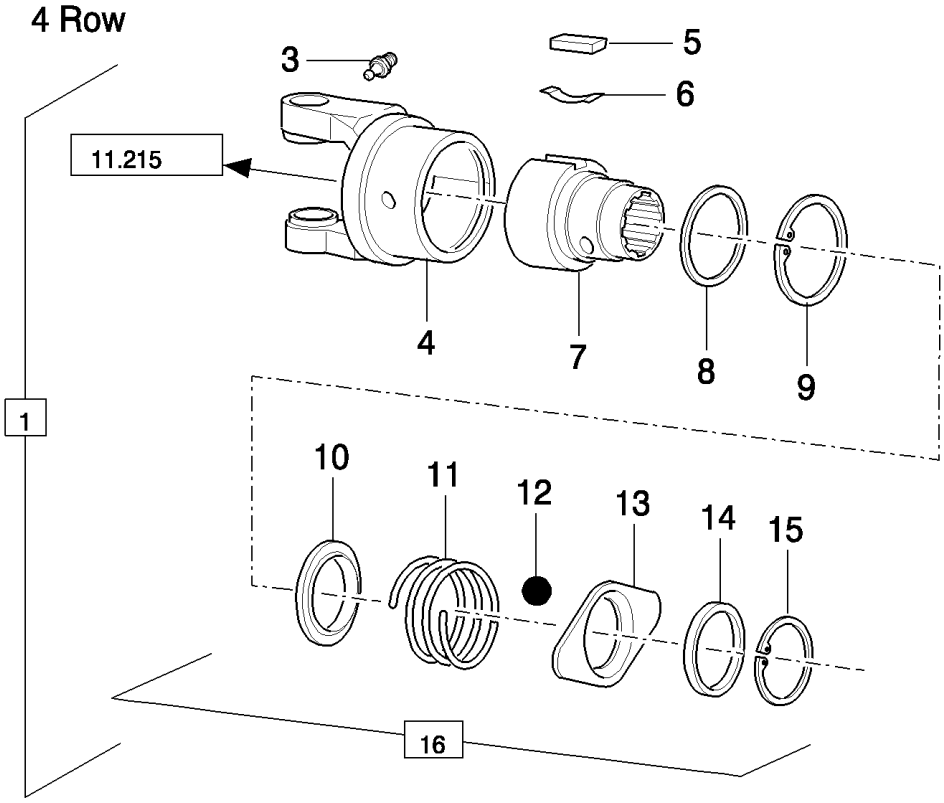

5 and 6 Row

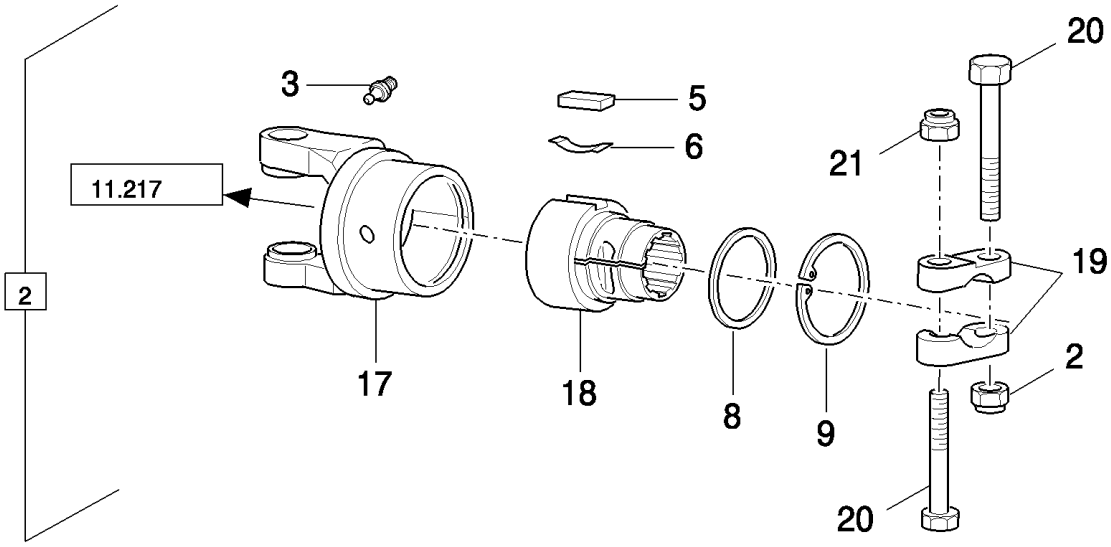

TX68 COMBINE - BASE UNIT

11.218(01) OVERRUNNING CLUTCH

ссылка	Номер детали	Кол-во	Описание
1	84014280	1	CLUTCH, , FOR 4 ROW ONLY
2	84014281	1	CLUTCH, , FOR 5 AND 6 ROW ONLY
3	300919	1	NIPPLE, LUBE,
4	84014282	1	BELL HOUSING,
5	449316	2	KEY,
6	449317	2	SPRING,
7	80746939	1	
8	449318	1	RING,
9	370018	1	RING, SNAP,
10	730590	1	RING,
11	556669	1	SPRING,
12	386512	3	BALL,
13	556933	1	CLIP, HOSE,
14	458367	1	RING,
15	80458310	1	CIRCLIP,
16	89819053	1	KIT,
17	80751392	1	HOUSING,
18	84014283	1	HUB,
19	751932	2	CLAMP,
20	412085	2	BOLT, Hex, M12 x 80, 10.9,
21	100038	2	NUT, M12 x 1.75, Cl 8,

SECTIONS	**SECTIONS**	**SECCIONES**	**AFSNIT**
SEZIONI	**ABSCHNITTE**	**SECÇÕES**	**SECTIES**

SEC. 12

ZAFHEAD
SEE CATALOGUE 603.27.012.00

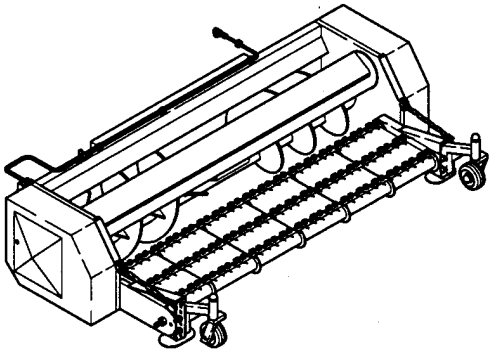

CORNH
SEE CATALOGUE 603.27.009.00

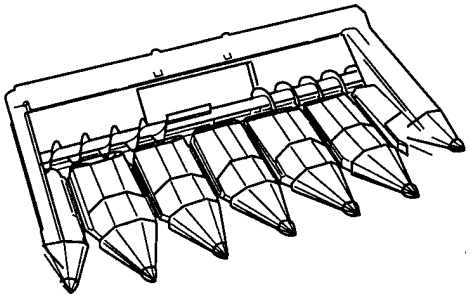

FALIHD
SEE CATALOGUE 603.27.008.00

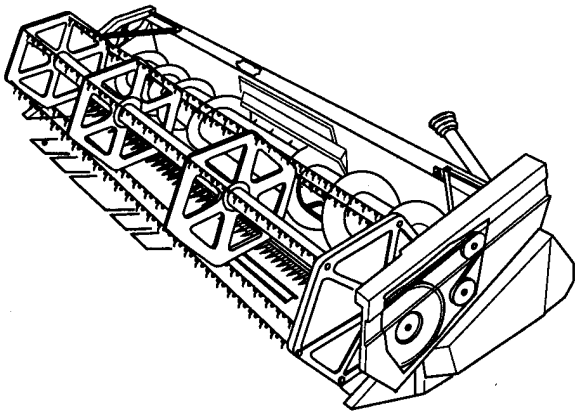

CORNHEADER
SEE CATALOGUE 603.27.007.00

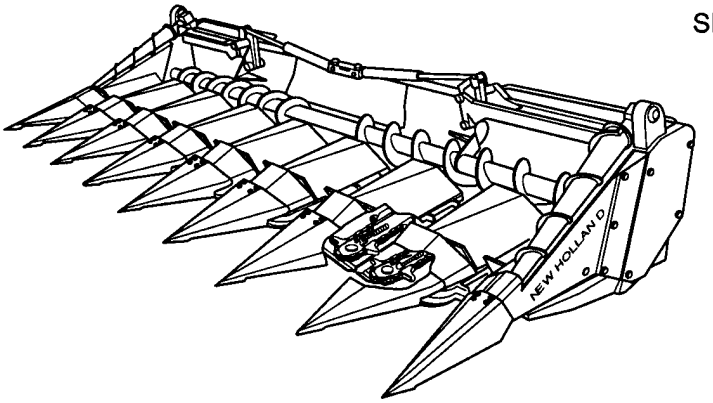

HIGH CAPACITY GRAIN HEADER
SEE CATALOGUE 603.27.017.00

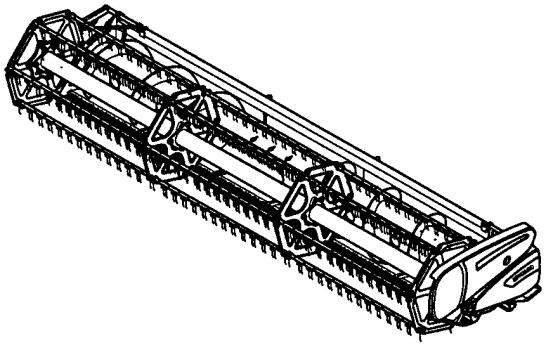

ссылка	Номер детали	Кол-во	Описание